AECOM Environment

Prepared for:
Former Ciba-Geigy Facility
Cranston, Rhode Island

Prepared by:
AECOM
Chelmsford, MA
June 2012

Supplemental Remedial Investigation Work Plan

Former Ciba-Geigy Facility
Cranston, Rhode Island

Prepared By
Joanne Lynch
Project Manager

Reviewed By
Lucas Hellerich, Ph.D.

Approved By: _____ Date: _____

Frank Battaglia
USEPA Project Manager

SEMS Doc ID 100016077

Contents

1.0 Introduction 1-1

1.1 Project Objectives 1-1

1.2 Project Description 1-2

2.0 Site Background 2-1

2.1 Site History 2-1

2.2 Site Background 2-1

2.3 Investigation Areas 2-2

2.4 Site Geology and Hydrogeology 2-4

3.0 Field Sampling Plan 3-1

3.1 Sampling Objectives 3-1

3.2 Sampling and Analysis Plan 3-1

3.2.1 Data Quality Objectives (DQOs) 3-1

3.2.2 Field Techniques and Sequence 3-1

3.3 Real-time Data Evaluation and Dynamic Work Planning 3-5

3.3.1 Determination of Additional, Alternate, or Deeper Soil Boring Locations 3-5

3.4 Data Management 3-6

3.4.1 Field Data Collection and Transmission 3-6

3.4.2 Data Review 3-6

3.4.3 Project Database 3-6

3.5 Waste Management and Decontamination 3-6

3.5.1 Solid Waste 3-6

3.5.2 Liquid Waste 3-6

3.5.3 Decontamination 3-7

4.0 Data Evaluation and Reporting 4-1

4.1 Data Usability/Validation 4-1

4.2 Reporting 4-1

5.0 References 5-1

Appendices

Appendix A Project Operating Procedures

Appendix B Health and Safety Plan

Appendix C RIDEM Division of Site Remediation Policy Memo 95-01

List of Tables

Table 3-1 Proposed Monitoring Well Samples

Table 3-2 Proposed Groundwater Grab Samples

Table 3-3 Proposed Soil Gas Samples

Table 3-4 Proposed Soil Samples

List of Figures

Figure 1-1 Site Location Map

Figure 1-2 Site Plan

Figure 3-1 Proposed Sampling Locations

Figure 3-2 Proposed Well Gauging and Sampling Locations

1.0 Introduction

AECOM Technical Services, Inc. (AECOM) was contracted by BASF to perform a Supplemental Remedial Investigation (RI) at the Former Ciba-Geigy Facility, located in Cranston, Rhode Island (the Site). A Site Location Map is provided as Figure 1-1. As part of this investigation, AECOM has prepared this Supplemental Remedial Investigation Work Plan (Work Plan), which presents the organization, objectives, and planned activities associated with the supplemental RI activities to be conducted at the Site. Details regarding the quality assurance/quality control (QA/QC) aspects of the project are discussed in the Quality Assurance Project Plan (QAPP), provided under separate cover.

The scope of work is designed to fill data gaps to support a revised conceptual site model (CSM) for the Mill Street portion of the Site based on review (gap analysis) of the following documents and data:

- RCRA Facility Investigation Report for On-Site Areas (RFI) dated July 1995 (Ciba Corporation),
- RCRA Facility Investigation (RFI) Phase I Interim Report (Ciba-Geigy Corporation) dated November 1991,
- RCRA Facility Investigation Stabilization Investigation Report and Design Concepts Proposal (Ciba-Geigy Corporation) dated May 1993,
- On-Site Corrective Measures Study Report (Woodward-Clyde) dated September 1995,
- Revised On-Site Soil Interim Remedial Measures Report (Woodward-Clyde) dated August 1996,
- Results of Baseline Sampling Conducted at SWMU-11 (Woodward-Clyde) dated June 1997,
- SWMU-11 Post-SVE Soil Sampling (Ciba-Geigy Corporation) dated January 2005,
- Soil Investigation Report (GFS) dated November 2007, and
- Special Monitoring Report – Monitoring Results for 2006-2007 (Ciba),
- Air Sparging pilot test performed on the Mill Street portion of the Site by AECOM in 2011, and
- Historical annual groundwater sampling data (water level and water quality).

The data generated during this Supplemental RI is intended to provide the USEPA and BASF data necessary to fill data gaps for the Mill Street portion identified from previous investigations at the Site, including the reports listed above.

1.1 Project Objectives

The primary objective of this Supplemental RI is to close data gaps that have not been addressed during previous investigations at the Site. In addition, this Supplemental RI will update current contaminant concentrations at locations with historical data that may not be representative of current conditions (i.e., data 10 years old or greater). An updated set of data will be used to evaluate the feasibility of remedial actions to support regulatory closure and site reuse.

The data quality objectives (DQOs) of this phase of investigation are:

1. To collect and evaluate soil and groundwater data to support regulatory closure of the Site, to identify any potential discrete areas of “source” material within the former Production Area that may contribute to degradation of the long-term groundwater quality and inability to attain the groundwater Media Protection Standards in a timely manner;
2. To collect and evaluate soil data to evaluate polychlorinated biphenyl (PCB) concentrations in shallow soil to support regulatory closure of the Site; and
3. To collect data to support a human health risk evaluation.

This Work Plan describes the field activities that will provide additional data to meet the stated objectives. The activities described in this Work Plan include:

- Collection of groundwater elevation data to more accurately characterize local groundwater flow conditions.
- Groundwater sampling and analysis of existing site wells using low flow sampling methods to close data gaps and update existing locations with current contaminant concentrations.
- Groundwater grab sampling and analysis from two transects to close data gaps and focus on identifying any remaining source areas.
- Collection and analysis of soil vapor samples to assess potential vapor intrusion.
- Surface and subsurface soil sampling and analysis from areas within the Site identified as data gaps or requiring updates of current contaminant concentrations.

All field sampling activities will be conducted in accordance with the requirements outlined in the site-specific Health and Safety Plan (HASP) (AECOM, 2012), QAPP (AECOM, 2012) and Project Operating Procedures (POPs).

1.2 Project Description

To accomplish this Site investigation, data collection and evaluation will be performed in an iterative field investigation program. Information from previous Site investigations and assessments were used to identify sampling locations necessary to fill data gaps. A review of historical operations was performed to identify sampling locations where the presence or absence of contamination will be confirmed.

In order to facilitate efficient completion of the project, a dynamic investigation approach will be utilized. The dynamic approach will encompass real-time interpretation of field observations and evaluation of field-screening data.

2.0 Site Background

The Former Ciba-Geigy Facility (the Site) where the supplemental RI is being performed comprises an elongated parcel of land that is approximately 5.5 acres, located at 180 Mill Street in Cranston, Rhode Island. It is bounded by residential properties on Mill Street and Sunset Terrace to the north, Mill Street and the Safety Kleen property to the west, the Pawtuxet River to the south, and residences on Robert Circle to the east (Figure 1-2). An adjoining parcel owned by BASF is located to the west and northwest of the Mill Street portion of the former Ciba-Geigy facility.

A detailed background and historical summary of the Site are included in the 1995 RFI Report (Woodward-Clyde, 1995), and are briefly summarized below.

2.1 Site History

The Alrose Chemical Company initiated chemical manufacturing on-Site in 1930. The Geigy Chemical Company of New York purchased the facility in 1954 and later merged with the Ciba Corporation in 1970. The facility was used for batch manufacturing of organic chemicals, such as plastic additives, optical brighteners, pharmaceuticals, and textile auxiliaries (Ciba-Geigy, 1993). The Ciba-Geigy facility ceased all chemical manufacturing operations in May 1986 when the plant was closed. The RFI (1995) indicates that the plant closure included the removal of materials and residues, as well as the proper disposal of wastes and hazardous wastes. The structures associated with the Solid Waste Management Units (SWMUs), areas of concern (AOCs), and areas of additional investigation (AAOIs) were dismantled. Therefore, wastes were not available to be characterized, and physical descriptions of SWMUs and AOCs from the RFI and related Site documents are based on historical information.

2.2 Site Background

The RFI document cites a number of spills or releases to the environment that have occurred from historical operations. Many of the spills were reported to the regulatory agencies (e.g. Rhode Island Department of Environmental Management) and corrective actions were completed. However, based on available documentation, a number of the incidents could not be resolved regarding completion of cleanup and closure. Thus, there is the potential that one or more of the releases has impacted the subsurface at the Site. There are general locations cited for the spills and the field program described herein preferentially locates some soil borings in these areas.

At the former Ciba-Geigy facility, the compounds chlorobenzene, 1,2-dichlorobenzene, 2-chlorotoleune, toluene, xylenes were identified as constituents of concern (COC). Media Protection Standards (MPS) were developed for these compounds in the RFI (1995). While areas of concern have been identified, elevated concentrations that remain in groundwater suggest that there are source area(s) within the Production Area that have not been fully defined. Figure 3-1 presents the Site areas of concern, Solid Waste Management Unit (SWMU) locations, and additional areas of investigation (AAOI) described below.

An Interim Remedial Measure (IRM) was completed in 1996 to address elevated levels of polychlorinated biphenyls (PCBs) present in surface soil at the former Production Area (On-Site IRM, Woodward-Clyde, 1996). All soil containing total PCB concentrations greater than 45 ppm were removed, to a maximum depth of 1-2 feet bgs. Former building foundations and subsurface structures were left in place. Clean fill was used to restore the Site to grade.

A documented release of approximately 90 lbs of toluene from a pipeline in 1983 occurred near the western edge of the Site, within the Production Area. The spill area comprised SWMU 11, where a soil/vapor extraction (SVE) system was installed in 1997. The SVE system removed toluene from shallow soil. A Post-SVE Soil Sampling Report was submitted to EPA in January 2005. Confirmatory samples in the SWMU-11 area were collected at and above the water table. However, the presence of other COCs with a specific gravity greater than water's specific gravity in that area based on historical reporting (RFI, 1995) suggests that additional sampling at depth, below the water table, would close a data gap in this area.

Concentrations of Site COCs in groundwater exceeded the MPS. A groundwater extraction and treatment system (GETS) was designed to pump impacted groundwater, treat and discharge to the Cranston POTW. The design was detailed in the Stabilization Report and the system was turned on in 1995. The GETS was turned off with EPA approval in May 2006 because the MPS had been met. Ciba followed up with groundwater monitoring but found that concentrations of chlorobenzene and 2-chlorotoluene had increased above the MPS in the southwest portion of the site. The system was turned back on and ran until April 2010 when it was damaged in a significant flood event of the Pawtuxet River. Quarterly monitoring since that time shows that the MPS have been exceeded at MW-2S and P-35S for chlorobenzene. No other Site COCs exceed the MPS in groundwater in 2011. A membrane interface probe (MIP) study performed in 2007 identified an area within the Southern Production Area as containing elevated concentrations of chlorobenzene, 1,2-dichlorobenzene, toluene, and 2-chlorotoluene (GFS, 2007).

In July 2011, an air sparge pilot test was implemented to evaluate air sparging as an alternative to the GETS remedy. Based on the MIPs data collected in 2007, an isolated area within the Southern Production Area was targeted for additional investigation and testing. The pilot test results indicated that elevated concentrations of site COCs in the parts per million range were present in soil, outside of the isolated zone that was previously identified. With regard to technology feasibility, while the pilot test indicated that the surficial unit was viable for air sparging technology, no connection was made with the lower impacted geologic unit that was situated below a well-defined silt layer. The results of this pilot test will be incorporated into the supplemental RI report (see Section 4.0).

2.3 Investigation Areas

The following areas have been identified for further investigation to confirm the absence or presence of impacts from historical manufacturing activities. A brief description of the area and why it was identified as a potential data gap are presented below. These areas are presented on Figure 3-1.

SWMU 2, 3, 7 - SWMUs 2, 3, and 7 contain a former tank farm area where rail cars were loaded. While secondary containment was present and no spills were noted, data collection is proposed to support a site reuse evaluation.

SWMU 4 - SWMU 4 was an area that contained a trash compactor where solid wastes were disposed and broken down. Data collection is proposed to support a site reuse evaluation.

SWMU 8 – An historic spill was noted at nearby SWMU 4 and a former Site plan notes a Solvent Recovery Area, which was not identified as a specific AOC or SWMU and had not been investigated in the RFI. Data collection is proposed to support a site reuse evaluation.

SWMU 11 – A documented toluene spill from a pipeline to a subsurface sump at Building #11 occurred in the early 1980s. A soil-vapor extraction (SVE) system operated and post-closure monitoring indicated that COCs were remediated. The closure report indicated that samples were

collected down to 7 ft bgs, however, no deeper soil samples were collected for confirmation. Data collection is proposed close this data gap.

AAOI 15 – Former Laboratory Building Piping – A laboratory sump was present within the laboratory building and interviews indicated that dyes may have been washed down laboratory sinks in the 1960s and potentially discharged at an outfall in the river. Based on the facility site plan, borings to investigate this area will be advanced around the outside of the building and sump area.

NAPL Area – During installation of MW-34D, a separate phase liquid was tentatively (visually) identified as Dowtherm, but no confirmation sampling was completed on this material. It was reportedly present from 14-30 ft bgs, throughout a 6,400 sq ft area. The potentially impacted soil in this area is inaccessible but could be acting as a remaining source that impacts long-term groundwater quality. Data collection is proposed to evaluate this area as a potential source that has caused groundwater to exceed MPS.

Jet Sump Area – There was a boiler plant jet sump failure in the southern portion of the site and observation of possible solvent in the sump in the mid-1970s. Footings for the boiler plant were exposed and a large area beneath the building was filled in with concrete for structural support in approximately 1978 (based on interview with facility staff). This area coincides with the elevated soil concentrations denoted in the 2007 MIP investigation at MIP-1, MIP-2, MIP-5, and MIP-7. Data collection is proposed to evaluate this area as a potential source that has caused groundwater quality to exceed MPS.

Buildings #10/#18 – Boiler Room & Transformers – Historically, this area contained boilers and transformers. Data collection is proposed to support a site reuse evaluation. .

Building #24 – Zinc Rail Car Area - Dry chemicals were loaded into rail cars at this location and data collection is proposed to support a site reuse evaluation.

Building #21 – Zinc Sump - Soil borings proposed for potential “NAPL area” will also be used for zinc delineation surrounding zinc sump plus one additional boring at zinc sump location.

Building #21 – Tank Farm – Data collection is proposed at this former tank farm that supported pharmaceutical manufacturing activities in Building #21.

Piping Runs – The underground piping transported material from building to building on-Site. While there were no documented releases from the piping, aside from the toluene release in the 1980s, verification soil samples will be collected near highest potential for release locations (i.e., the locations of junctions in the former industrial waste lines).

Hot Sump – A “T” junction between the hot sump and the outfall where the cofferdam was located was selected for a location to investigate. The cofferdam was related to a majority of the sediment impacts that were addressed in earlier remedial actions.

Vapor Intrusion Survey - While there is no indication of a release in and around the former office, lab and warehouse area, a soil gas survey is intended to identify the potential for vapor intrusion issues in this area.

Septic Tank – Based on historical information, the site previously utilized one septic system for wastewater disposal prior to Ciba building a wastewater treatment plant off-Site in 1975. The

associated sewage tank is located to the east of Building 14. An assessment of the tank contents and surrounding soil quality will be implemented, and necessary abandonment tasks identified.

UST Vault/Underground Tunnel - Former USTs and a below-ground vault located on the northeastern portion of the site were decommissioned according to BASF staff interviews, but no confirmatory sampling or closure reporting exists. An assessment of the surrounding soil quality will be implemented to characterize potential impacts.

Loading Dock – Data collection is proposed at the loading dock where manufactured chemicals were shipped off-site to confirm that no impacts are present.

Former Laboratory Buildings (#20 and #26), Warehouse (#25) and Warehouse/WWTP (#15) – The northern area of the site between the laboratory and warehouse buildings, next to former sanitary sewer (vitrified clay) lines, will be investigated. These data along with the soil vapor data will be used to characterize potential impacts resulting from laboratory operations.

2.4 Site Geology and Hydrogeology

Detailed summaries of the geology and hydrogeology of the Production Area are included in the 1995 RFI submitted to EPA by Ciba Corporation (1995). The Production Area, as described in the Stabilization Investigation Report and Design Concepts Proposal (Ciba, 1993), RFI and supported by later soil borings completed on-site, is underlain by urban fill, including sand, silt and gravel as well as concrete and metal debris. Localized areas contain a fairly homogeneous unit of gray silt underlain by a gravelly sand unit that is a heterogeneous mixture of gray sand, silt, clay, and gravel. The gravelly sand unit is present in the Southern Production area, near monitoring wells MW-10 and MW-12. A unit of relatively homogeneous fine sand and silty sand underlies the silt unit. A 5 to 10 foot thick Glacial till unit directly overlies bedrock in the Production Area. Bedrock is present from 50 to 59 ft bgs. Groundwater flow direction is generally to the southeast toward the Pawtuxet River.

3.0 Field Sampling Plan

3.1 Sampling Objectives

The objective of this Supplemental RI is to close data gaps that have not been addressed during previous investigations at the Site. In addition, this Supplemental RI will update current contaminant concentrations at locations with historical data that may not be representative of current conditions (i.e., data 10 years old or greater).

3.2 Sampling and Analysis Plan

Completion of the planned investigation will be accomplished by using an iterative dynamic approach to the investigation, incorporating field screening techniques, field-based decision-making and real-time evaluation of data to modify the sampling plan while crews are still in the field, as necessary. In consultation with USEPA and senior AECOM project staff, the field team leader will be given authority to adjust sampling locations, as appropriate based on field conditions. Field and laboratory data will be rapidly uploaded to the project database to allow a timely evaluation of results and thereby allow near real-time adjustments to the field investigation, as necessary, to complete the delineation of impacts encountered.

3.2.1 Data Quality Objectives (DQOs)

The DQOs for this investigation are:

1. To collect and evaluate soil and groundwater data to support regulatory closure of the Site, to identify any potential discrete areas of “source” material within the former Production Area that may contribute to degradation of the long-term groundwater quality and inability to attain the groundwater Media Protection Standards in a timely manner;

2. To collect and evaluate soil data to evaluate polychlorinated biphenyl (PCB) concentrations in shallow soil to support regulatory closure of the Site; and

3. To collect data to support a human health risk evaluation.

Field-screening data will not be used to establish the presence or absence of a release in an area. However, it will be used as part of a weight-of-evidence approach in conjunction with laboratory data and geologic information to delineate impacts in the context of the conceptual site model (CSM). Additionally, field screening and observations will be used by the field team to evaluate and adjust sampling depths and locations as needed. This approach to the field investigation is a key component of the dynamic work plan.

3.2.2 Field Techniques and Sequence

Field work and sampling will be conducted to evaluate soil and groundwater quality at the Site. Field work will be conducted in two main phases. The first phase will include collection of groundwater grab samples, collection of depth to groundwater measurements, collection of groundwater samples for field screening and laboratory analyses, collection of shallow soil and soil vapor samples for laboratory analysis. After the groundwater data is processed from the first phase of field work, the second phase

of field work will include the advancement of a membrane interface probe (MIP) and collection of deeper soil samples. The proposed surface soil, subsurface soil, and soil vapor locations are shown in Figure 3-1. The monitoring well locations are shown in Figure 3-2.

A summary of the sample locations, types of samples collected, analyses to be performed, monitoring wells to be sampled, and groundwater grabs for sample collection is presented in Tables 3-1 through 3-4. The locations of any additional soil borings will be determined based on a review of field and laboratory data obtained during the field program. A summary of the proposed number of environmental samples and analyses is also presented in Tables 3-1 through 3-4, by media. A general discussion of field methods planned for this investigation is provided in each of the subsections below.

The following POPs are provided in Appendix A of this Work Plan:

- POP 001 – Recording of Field Investigation
- POP 002 – Chain of Custody and Shipping Procedures
- POP 003 – Field Calibration of the YSI Water Quality Meter
- POP 004 – Operation and Calibration of a PID
- POP 005 – Water Level Measurements
- POP 006 – Surface and Subsurface Soil Sampling Procedures
- POP 007 – Head Space Screening for Total VOCs
- POP 008 – Low Stress Groundwater Sampling Procedures
- POP 009 – Decontamination of Field Equipment
- POP 010 – Packaging and Shipment of Samples
- POP 011 – Monitoring Well Development
- POP 012 – Calibration and Operation of the LaMotte 2020 Turbidimeter
- POP 013 – Procedures for Passive Sampling of Air Using SUMMA Canisters

3.2.2.1 Pre-Clearing of Borings

The proposed sampling locations will be reviewed against site utility maps, if available. The locations of all proposed soil, groundwater, and soil vapor sampling points will be marked and pre-cleared prior to performing subsurface sampling activities. Dig Safe®, a not-for-profit private utility location service, will be utilized to help locate underground utilities in the vicinity of the pre-marked investigation locations. Subsequent sampling locations determined based on the review of environmental data will similarly be reviewed against marked utilities and utility maps.

3.2.2.2 Monitoring Well Inventory

On-Site monitoring wells will be inventoried and assessed for condition prior to collecting groundwater samples. Off-site monitoring wells are not represented on maps or figures in the RFI. In 2011, Facility personnel completed an off-Site well list and descriptions:

- Wells P-20S, P20D, and RW-4 were located at #42/44 Robert Circle;
- P-23D was located at 123 Lyndon Rd;
- P-24D and MW-19S were located in the street across from 136 Mayflower Drive.

These wells are not currently monitored. They will be assessed for presence, condition, and then proposed for abandonment during a later phase of work.

3.2.2.3 Site-Wide Synoptic Water Level Measurements

Prior to the groundwater sampling, a site-wide synoptic water level measurement event will be performed in order to determine groundwater elevations at the Site and accurately characterize local groundwater flow conditions. In order to achieve this objective, a network of wells will be measured during this synoptic water level measurement event. A list of the wells that will be included in the synoptic water level measurement event is presented in Table 3-1 and shown on Figure 3-2. The synoptic water level measurements will be performed according to the procedures in POP 005 Water Level Measurements (Appendix A).

3.2.2.4 Groundwater Monitoring Well Redevelopment

If necessary, wells will be re-developed in accordance with the surge block development techniques presented in POP 011 Monitoring Well Development (Appendix A). Well development groundwater will be collected in 55-gallon steel drums, and appropriately disposed off-site in accordance with applicable regulations (see Section 3.5). All groundwater monitoring wells will be allowed to equilibrate for a minimum of 7 days after development prior to sampling.

3.2.2.5 Groundwater Sampling Methods

Existing monitoring well and groundwater grab locations to be sampled, and the analyses to be performed are presented in Tables 3-1 and 3-2, respectively. The groundwater grab locations are depicted in Figure 3-1; the monitoring well locations are depicted in Figure 3-2.

<u>Monitoring Well Sampling</u>

Groundwater samples will be collected from existing monitoring wells (a total of 34 wells) and depth to water will be gauged. QA/QC samples will be collected at a frequency of one per every 10 analytical samples or 1 minimum per day. Trip blanks and equipment rinseate blanks will also be collected at the same frequency. Groundwater samples will be analyzed for volatile organic compounds using Method 8260 (VOCs). Well locations and elevations will be surveyed referencing to local datum by a licensed surveyor.

Groundwater samples will be collected from monitoring wells with portable bladder pumps using disposable bladders and low-flow sampling techniques. POPs for sampling techniques and equipment calibration and operation are provided in Appendix A. The following POPs are associated with groundwater sampling.

- POP 003 Field Calibration of the YSI Water Quality Meter
- POP 008 Low Stress Groundwater Sampling Procedures
- POP 012 Calibration and Operation of the LaMotte 2020 Turbidimeter

If turbidity below 25 NTU cannot be achieved during sampling, the turbidity will be considered part of the total contaminant mobile load and an unfiltered sample will be collected.

Groundwater Grab Sampling

Groundwater grab samples will be collected at 10 locations along two transects that run parallel to the bulkhead wall using a Geoprobe. Two grab samples will be collected from each location, at approximately 2 and 7 feet below the bottom of the bulkhead wall at locations GW-1 through GW-5. Historical cross-sections suggest that this corresponds to a depth of approximately 27 and 32 feet below ground surface (ft bgs). It appears that Woodward-Clyde installed the existing bulkhead wall in approximately 1990 to replace an older structure. The older structure consisted of a concrete wall (deadman) with reinforcing steel about 10 ft upland of the current bulkhead. The wall extended to approximately 8 ft bgs. A former bulkhead wall (also ~8 ft bgs) was located 5 ft upland of the current bulkhead wall. Two grab samples will be collected from each location at GW-6 through GW-10 at a depth of 20 and 25 ft bgs. The groundwater grab sampling will allow for the targeting of specific vertical and horizontal intervals for a mass flux and/or remedial evaluation.

3.2.2.6 Soil Vapor Monitoring Point Installation and Sampling

The specific soil boring locations in which soil vapor samples will be collected and the analyses to be performed are presented in Table 3-3. The proposed soil vapor sample locations are depicted in Figure 3-1.

Four temporary soil vapor points will be drilled and installed to a depth of 6 ft bgs using hand-held equipment. Vapor points will be 6" long stainless steel points connected to the surface with tubing. Soil vapor samples will be collected according to the procedures in POP 013 Procedures for Passive Sampling of Air Using SUMMA Canisters (Appendix A)**.**

3.2.2.7 Membrane Interface Probe

A Membrane Interface Probe (MIP) evaluation will be completed at five of the soil sample locations. Based on the results of the groundwater results from the first phase of fieldwork and the MIPs evaluation, it is possible that some soil boring locations (shown on Figure 3-1) will be adjusted based on the results and assumed that an additional 10 soil samples may be collected and submitted for VOC analysis after 1 day of geoprobe activities.

A MIP will be mobilized and advanced into soil to a depth of 40 ft bgs at five locations across the Site (see Figure 3-1). The MIP is a percussion-tolerant VOC sensor that can log volatile organics that diffuse through a semi-permeable membrane. Using a carrier gas, the VOCs are brought to the surface through tubing, which is connected to a laboratory grade Photoionization Detector (PID), Flame Ionization Detector (FID), and Electron Capture Detector (ECD) for immediate screening. The MIP log provides semi quantitative/qualitative information on contaminant levels and lets the investigator collect targeted samples from contaminated zones. Information from both the MIP and electrical conductivity logs provides information on contaminant distribution and migration pathways. The purpose of the MIP locations will be to refine the vertical delineation of persistent residual source areas within the subsurface. This will allow for the targeting of specific vertical intervals for a mass flux and/or remedial evaluation.

3.2.2.8 Soil Boring Sampling Methods

AECOM anticipates completing approximately 29 soil borings at the Site. Soil borings will be completed using a hand auger techniques and a Geoprobe® direct push drill rig. Depending on the location accessibility, direct push equipment will be alternately truck- or track-mounted. Soil borings will be advanced to 6 feet bgs and samples will be collected from the following depth intervals:

- 0-2 ft bgs (VOC, PCB, SVOC, pesticides, metals)
- 4-6 ft bgs (PCBs)
- An additional 10 soil samples will be collected from worst case 2-foot interval based on results of groundwater grab samples, MIP results, monitoring well samples, visual, and/or olfactory observations (VOCs only).

Approximately six samples will be located within the footprint of the historic PCB soil remediation areas and 23 will be located outside of this footprint. It is necessary to collect samples within and outside of the footprint of historic remediation areas to evaluate the completeness of the historic remediation areas, as well as the conditions of soil in other areas of the Site. Table 3-4 lists the soil boring locations, and analyses to be performed. Soil boring locations are depicted in Figure 3-1.

Soil boring sampling methods will include hand auger and direct-push core sampling techniques. Hand augers will be utilized for shallow samples (i.e., 0-2 feet) or in areas where there is a potential to encounter subsurface utilities. All soil samples will be collected according to POP 006 Surface and Subsurface Soil Sampling Procedures (Appendix A). Total VOC headspace screening will be performed according to POP 007 Head Space Screening for Total VOCs (Appendix A).

3.2.2.9 Field screening methods

Field screening for VOCs will be performed using a photoionization detector (PID) equipped with an appropriate lamp to detect the contaminants of concern at the site. The VOC screening data will be used as an assessment tool to refine the selection of soil sampling locations for VOCs and VPH analysis. The PID will be operated according to the procedures in POP 004 Operation and Calibration of a Photoionization Detector located in Appendix A of this Work Plan. Total VOC headspace screening will be performed according to the procedures in POP 007 Head Space Screening for Total VOCs, also located in Appendix A of this Work Plan.

3.3 Real-time Data Evaluation and Dynamic Work Planning

Data evaluation and work plan evaluation will be continuously performed during the conduct of the investigation to allow adjustment of the sampling and analysis plan in ways that optimize the completeness and efficiency of the field program. Data evaluation will begin in the field with interpretation of field observations and screening data. Data evaluation will also be performed on a daily basis by senior project staff in the office through daily communications with the field staff. The evaluation of field observations/screening and laboratory data will be used to determine if the sampling program requires modification in order to achieve the DQOs.

3.3.1 Determination of Additional, Alternate, or Deeper Soil Boring Locations

At the simplest level, field decisions can be made based on field observations and field screening data. A sample collected that is visibly impacted by petroleum (or other observable impacts) or which has elevated PID readings (i.e., greater than 10 parts per million by volume [ppmv]) will be considered indicative of an area that requires additional delineation, both horizontally and vertically.

If any subsurface structures are discovered that contain possible liquid waste (i.e., decommissioned piping or buried drums) and compromised through investigation activities, the EPA Remedial Project Manager (RPM) will be notified within 24 hours. Should any liquid waste be contained or leaking from such structures/containers (based on visual observation, PID reading, odor), a plan will be made with the EPA RPM and BASF for removal.

3.4 Data Management

Due to the dynamic nature of this investigation, data management will be critical to the success of the assessment. Automation of data collection, transmission, and processing will be integral to the performance of the project.

3.4.1 Field Data Collection and Transmission

Each investigation point will be located using a global positioning system receiver with sub-two-meter accuracy. These data will be uploaded directly to a field computer and transmitted daily to the office for inclusion in the project database that is discussed below in Section 3.4.3. Monitoring well locations will also be surveyed in by a Rhode Island Licensed Surveyor.

Field notes will be scanned and transmitted to the project team on a daily basis. Field screening data and laboratory Chains-of-Custody will be scanned and transmitted both to the AECOM database coordinator and project team on a daily basis as well. Laboratory deliverables will be provided in a format ready for upload into the project database.

3.4.2 Data Review

Field notes from the previous day will be reviewed against the laboratory Chains-of-Custody on a daily basis. Field notes and field forms will be reviewed on a daily basis by the field team leader for accuracy and completeness.

At the beginning of each day, a summary of anticipated laboratory deliverables for the day will be prepared. At the end of each day, the project team will review the list of daily deliverables for completeness and evaluate analytical data against applicable regulatory criteria. Analytical data will be reviewed and validated as described in the QAPP.

3.4.3 Project Database

Field data, laboratory data, and geospatial data will be uploaded to and stored in the project database. Laboratory deliverables will be received in an AECOM-specified electronic format ready for upload to the EQuIS database, and the database will be used with a Geographic Information System (GIS) to prepare figures for evaluation of impacts and data gaps, while the field program is ongoing.

3.5 Waste Management and Decontamination

3.5.1 Solid Waste

Drill cuttings will be containerized in 55-gallon drums and segregated according to point of generation. Laboratory analyses to be determined by the disposal facility will be used for waste characterization and profiling to determine appropriate off-site management. Other accumulated solid waste such as used gloves, paper towels, and plastic will be bagged and placed in appropriate containers to be managed as standard solid waste.

3.5.2 Liquid Waste

Investigation-derived waste (IDW) will be disposed in accordance with RIDEM Division of Site Remediation Policy Memo 95-01. Well purge water will be containerized in 55-gallon drums and segregated according to point of generation. Laboratory analyses will be used to determine if liquids meet groundwater quality standards (GB criteria). If GB criteria are met, liquid IDW can be disposed of on-site. Liquid IDW that was generated by decontamination activities will be disposed of on-site.

Should groundwater quality standards be exceeded or should a compound be detected above the reporting limit that is not on the GB criteria list, the drummed liquids will be disposed off-Site at an appropriate disposal facility.

3.5.3 Decontamination

Equipment will be decontaminated in designated areas on-Site in accordance with the procedures outlined in POP 009 Decontamination of Field Equipment located in Appendix A of this Work Plan. The decontamination procedures in POP 009 will be modified as follows:

- If field equipment does not come in contact with LNAPL, a solvent rinse will not be performed during decontamination. The decontamination will consist of tap water, detergent (i.e., Alconox®), and de-ionized water. If field equipment is contaminated by LNAPL, an appropriate solvent (i.e., methanol and/or hexane, acetone, isopropanol rinse will be performed per POP 009.
- Decontamination of the drilling equipment will be performed by the drilling subcontractors. AECOM will provide the drilling subcontractors with a copy POP 009 – Decontamination of Field Equipment (Appendix A) and will oversee that the decontamination is performed in accordance with the POP and the above deviations.

Decontamination fluids will be collected in 55-gallon drums and managed according to the procedures in Section 3.5.2.

4.0 Data Evaluation and Reporting

Because the investigation is being performed on an expedited basis with a dynamic Work Plan, data evaluation will be an ongoing process.

4.1 Data Usability/Validation

Data quality and usability will be evaluated according to the methodology provided in Section D of the QAPP.

Because the Supplemental RI will be completed using dynamic work strategies, initial evaluation of data will occur prior to completion of the data usability evaluation. However, subsequent to data validation, conclusions and interpretations will be reevaluated and finalized, and those conclusions and recommendations will be presented in the Supplemental RI Report.

4.2 Reporting

Data collected from this Supplemental RI will include:

- A summary evaluation of data quality
- A compound specific discussion of the nature and extent of contamination
- A discussion of the fate and transport of detected constituents
- Clarification/refinement of the conceptual site model
- Presentation of data that facilitates remedial development alternatives
- Data tables and figures

5.0 References

AECOM, 2012. Health and Safety Plan for Former Ciba-Geigy Facility, Cranston, Rhode Island.

AECOM, 2012. Quality Assurance Project Plan for Supplemental Remedial Investigation at the Former Ciba-Geigy Facility, Cranston, Rhode Island.

CIBA-GEIGY Corporation, 1991. RCRA Facility Investigation (RFI) Phase I Interim Report, Former Ciba-Geigy Facility, Cranston, Rhode Island.

CIBA-GEIGY Corporation, 1993. RCRA Facility Investigation, Stabilization Investigation Report and Design Concepts Proposal, Former Ciba-Geigy Facility, Cranston, Rhode Island.

CIBA-GEIGY Corporation, 1995. RCRA Facility Investigation Report, Former Ciba-Geigy Facility, Cranston, Rhode Island.

CIBA-GEIGY Corporation, 2005. SWMU-11 Post-SVE Soil Sampling, Former Ciba-Geigy Facility, Cranston, Rhode Island.

CIBA-GEIGY Corporation, 2007. Special Monitoring Report – Monitoring Results for 2006-2007, Former Ciba-Geigy Facility, Cranston, Rhode Island.

Geological Field Services, Inc., 2007. Soil Investigation Report for the Former Ciba-Geigy Facility, Cranston, Rhode Island.

Woodward-Clyde, 1995. On-Site Corrective Measures Study Report, Former Ciba-Geigy Facility, Cranston, Rhode Island.

Woodward-Clyde, 1996. Revised On-Site Soil Interim Remedial Measures Report, Former Ciba-Geigy Facility, Cranston, Rhode Island.

Woodward-Clyde, 1997. Results of Baseline Sampling Conducted at SWMU-11, Former Ciba-Geigy Facility, Cranston, Rhode Island.

Tables

Table 3-1
Proposed Monitoring Well Samples
Former Ciba-Geigy Facility, Cranston, RI

Area of concern	Location ID	VOCs (Method 8260)
SWMU 2 SWMU 3 SWMU 7	MW-10S	1
	MW-10D	1
	MW-12S	1
	MW-12D	1
	MW-20S	1
SWMU 10	MW-4S	1
	MW-4D	1
	MW-14S	1
	MW-14D	1
	MW-21S	1
NAPL area	MW-34S	1
	MW-34D	1
	P-36S	1
	PW-130	1
Jet Sump area	MW-2S	1
	MW-22S	1
	MW-31D	1
	MW-100S	1
	MW-100D	1
	MW-101S	1
	MW-101D	1
	MW-102S	1
	MW-102D	1
	PW-120	1
Building #24 Zinc Rail car area Solvent Recovery Area	MW-13S	1
	P-13D	1
	P-38S	1
	P-37S	1
	PW-110	1
	MW-29D	1
Piping runs	MW-1D	1
	MW-1S	1
	MW-30D	1
	P-35S	1
TOTAL		**34**

Notes:
QA/QC requirements (1 duplicate sample and 1 MS/MSD sample for 20 samples):

Duplicate samples:	2
MS/MSD samples:	2

Sample label description: MW id_MMDDYY-1 (primary sample & MS/MSD sample)
MW id_MMDDYY-2 (duplicate sample)
Example: MW-10S_050112-1

Table 3-2
Proposed Groundwater Grab Samples
Former Ciba-Geigy Facility, Cranston, RI

Area of concern	Location ID	VOCs (Method 8260)
Jet Sump area	GW-1	2
	GW-2	2
Building #22	GW-3	2
Building #21 Tank Farm	GW-4	2
	GW-5	2
	GW-8	2
	GW-9	2
Building #23	GW-6	2
Piping Runs	GW-7	2
Between solvent recovery system and Pump house	GW-10	2
TOTAL		**20**

Notes:

QA/QC requirements (1 duplicate sample and 1 MS/MSD sample for 20 samples):

Duplicate samples:	1
MS/MSD samples:	1

Sample label description: GW id_MMDDYY-1 (primary sample & MS/MSD sample)
GW id_MMDDYY-2 (duplicate sample)

Example: GW-1_050112-1

Table 3-3
Proposed Soil Gas Samples
Former Ciba-Geigy Facility, Cranston, RI

Area of concern	Location ID	VOCs (TO-15)
Off-Site Vapor Intrusion Evaluation	SG-1	1
	SG-2	1
	SG-3	1
	SG-4	1
TOTAL		**4**

Notes:

QA/QC requirements (1 duplicate sample and 1 MS/MSD sample for 20 samples):

Duplicate samples:	1
MS/MSD samples:	1

Sample label description: SG id_MMDDYY-1 (primary sample & MS/MSD sample)
SG id_MMDDYY-2 (duplicate sample)

Example: SG-1_050112-1

Table 3-4
Proposed Soil Samples
Former Ciba-Geigy Facility, Cranston, RI

Area of concern	Location ID	VOCs (Method 8260)	SVOCs (Method 8270)	PCBs (Method 8082)	Metals* (Method 6010, 7471, 9012)	Pesticides (Method 8082)	TPH
Septic tank	SB-101	1	1	2	1	1	
SWMU 2 SWMU 3 SWMU 7	SB-102	1	1	2	1	1	
	SB-103	1	1	2	1	1	
	SB-104	1	1	2	1	1	
	SB-105	1	1	2	1	1	
SWMU 4	SB-106	1	1	2	1	1	
SWMU 8	SB-107	1	1	2	1	1	
SWMU 11	SB-108	1	1	2	1	1	
	SB-109	1	1	2	1	1	
NAPL area	SB-110	1	1	2	1	1	
	SB-111	1	1	2	1	1	
	SB-112	1	1	2	1	1	
	SB-113	1	1	2	1	1	
Building #21 Zinc Sump (in building)	SB-114	1	1	2	1	1	
Building #10 Boiler Room and Building #18 Transformers	SB-115	1	1	2	1	1	1
	SB-116	1	1	2	1	1	1
Piping Runs	SB-117	1	1	2	1	1	
	SB-118	1	1	2	1	1	
	SB-119	1	1	2	1	1	
	SB-120	1	1	2	1	1	
Building #24 Zinc Rail car area	SB-121	1	1	2	1	1	
Hot Sump	SB-122	1	1	2	1	1	
UST Vault Underground Tunnel	SB-123	1	1	2	1	1	
	SB-124	1	1	2	1	1	
Loading Dock	SB-125	1	1	2	1	1	
	SB-126	1	1	2	1	1	
Former Laboratory Buildings (#20 and #26), Warehouse (#25), and Warehouse/WWTP (#15)	SB-127	1	1	2	1	1	
	SB-128	1	1	2	1	1	
AAOI 15 Former Laboratory Building Piping Former Warehouse Operations	SB-129	1	1	2	1	1	
TOTAL		**29**	**29**	**58**	**29**	**29**	**2**

Notes:

Soil samples will be collected from 0-2 ft bgs and submitted for VOCs, SVOCs, PCBs, metals, pesticides.
Soil samples will be collected from 4-6 ft bgs and submitted for PCB analysis only.
10 additional soil samples will be collected for VOC analysis based on the results of the MIP investigation.
QA/QC requirements (1 duplicate sample and 1 MS/MSD sample for 20 samples):

Duplicate samples:	2	2	2	2	2	1
MS/MSD samples:	2	2	2	2	2	1

Sample label description: SB id(depth interval)_MMDDYY-1 (primary sample & MS/MSD sample)
SB id(depth interval)_MMDDYY-2 (duplicate sample)

Example: SB-101(0-2)_050112-1

Figures

Map Location

Site Locus

Former Ciba-Geigy
Cranston, Rhode Island

0 500 1,000 2,000 3,000 4,000 5,000 6,000 Feet

0 100 200 400 600 800 1,000 1,200 1,400 1,600 Meters

Map Projection: State Plane, NAD 83, Feet.
Image Source: USGS Topographic Quadrangle: Providence, RI.

Scale: 1:24,000

AECOM

Figure 1-1

Date: May 2012

Project #: 60163799.8

J:\Indl_Service\Project Files\BASF-0760\Cranston RI\9_Permitting\ACOE\GIS\Projects\Figure 1 Site Locus.mxd

J:\Indl_Service\Project Files\BASF-0760\Cranston RI\7_Deliverables\1. GIS_Database\Projects\Figure_2_Aerial_Photograph_Presentation.mxd

AECOM

0 50 100 Feet

N W E S

FORMER CIBA-GEIGY FACILITY AND BELLEFONT POND PROPERTY

6013799.10

SITE PLAN

DATE: 05/01/12 | DRWN: J.E.B.

FIGURE 1-2

J:\Indl_Service\Project Files\BASF-0760\Cranston RI\7_Deliverables\1. GIS_Database\Projects\Proposed_Sampling_Locations.mxd

AECOM

0 40 80 Feet

N W E S

FORMER CIBA-GEIGY
CRANSTON, RI
60163799.3

PROPOSED SAMPLING LOCATIONS
MILL STREET LER ASSESSMENT

DATE: 03/29/12	DRWN: J.E.B.			FIGURE 3-1

J:\Indl_Service\Project Files\BASF-0760\Cranston RI\7_Deliverables\1. GIS_Database\Projects\Figure_2_ Monitoring_Wells.mxd

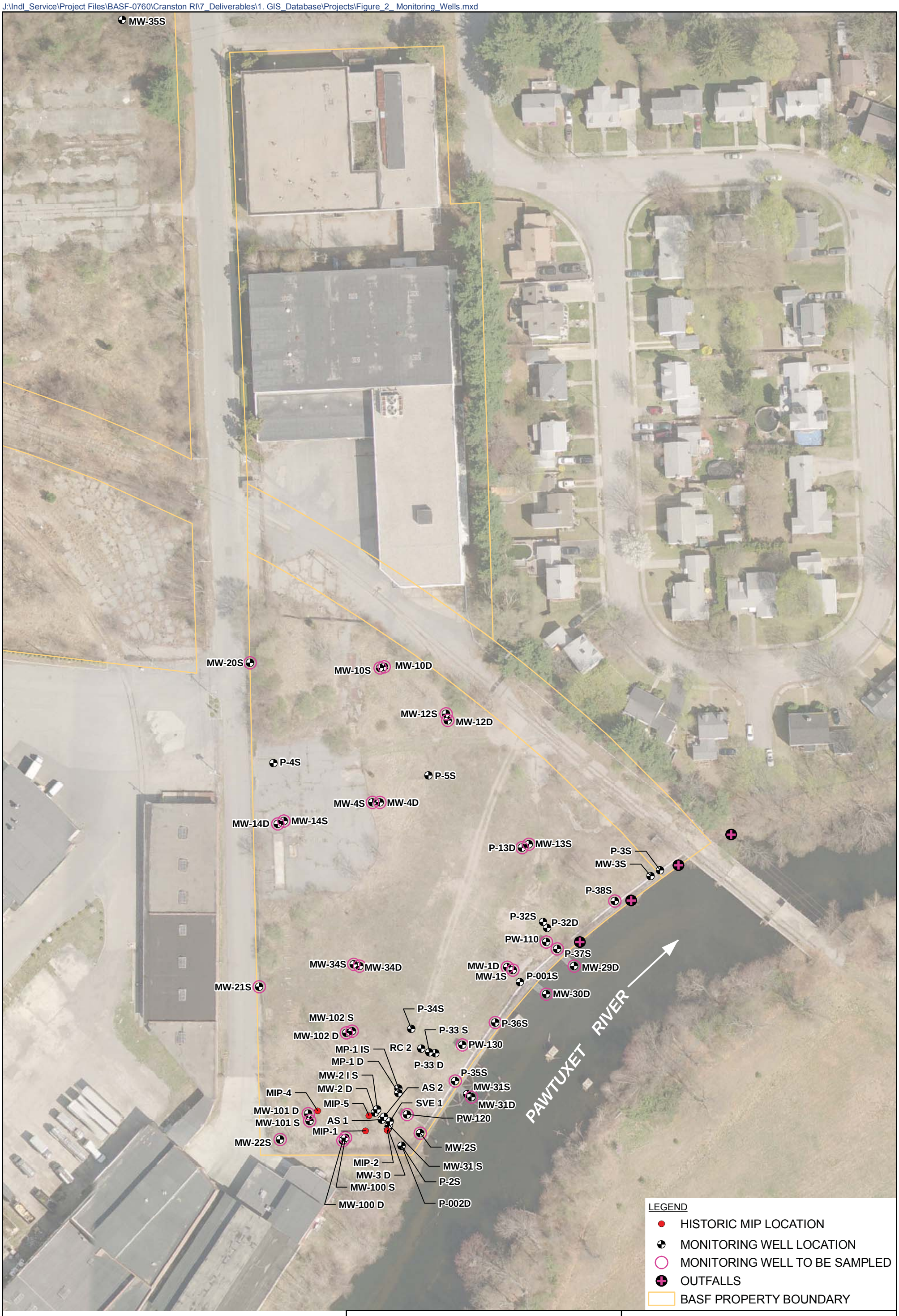

AECOM

0 40 80 Feet

N W E S

FORMER CIBA-GEIGY
CRANSTON, RI
60163799.3

MONITORING WELLS
MILL STREET LER ASSESSMENT

DATE: 02/23/12	DRWN: J.E.B.			FIGURE 3-2

Appendix A

Project Operating Procedures

AECOM

Project Operating Procedure

Recording of Field Data

Procedure Number: 001

Revision No.: 0

Revision Date: June 2010

Robert Shoemaker, POP Author

Date: June 2010

Joanne Lynch, Project Manager

Date: April 2012

Annual review of this POP has been performed and the POP still reflects current practice.

Initials: _____ Date: _____

Initials: _____ Date: _____

J:\Indl_Service\Project Files\BASF-0760\Cranston RI\7_Deliverables\12. Supplemental RI\AD\Appendix A\BASF POP 001 Recording of Field Data.doc

Contents

1.0 Scope and Applicability 1

2.0 Health and safety considerations 1

3.0 Interferences 1

4.0 Equipment and materials 1

5.0 Procedures 2

6.0 Quality assurance / quality control 4

7.0 Data and records management 5

8.0 Personnel qualifications and training 5

9.0 References 5

10.0 Revision History 6

1.0 Scope and Applicability

1.1 Purpose and Applicability

This Project Operating Procedure (POP) provides instructions for recording data when documenting a sample collection event, field measurements, or a site visit. Field data may be recorded in field logbooks, on standardized forms, as annotated maps, as photo documentation, or electronically. Chain-of-custody records are also considered field data; however, these records are specifically addressed in POP 002 Chain of Custody Procedures and POP 010 Packaging and Shipment of Environmental Samples.

2.0 Health and safety considerations

2.1 Not Applicable

3.0 Interferences

3.1 Not Applicable

4.0 Equipment and materials

The following materials are necessary for this procedure:

- Bound field logbook (preferably waterproof, such as Rite-in-Rain™)
- Standardized field data sheets (refer to individual POPs for test pit logs, boring logs, groundwater sample collection logs, etc.)
- Pen or Sharpie™
- Watch or other time-keeping device

The following materials may also be needed:

- Site maps
- Clipboard
- Three-ring binder or equivalent
- Camera

- Hand-held electronic recording device (e.g., PDA, laptop, or tablet PC)

5.0 Procedures

5.1 General

Field activities vary widely and no general rules can specify the exact information that must be recorded for each event. However, the field records must contain sufficient detail so that persons going to the site could reconstruct a particular situation without reliance on the collector's memory.

Field logbooks may be supplemented by standardized forms (e.g., well construction and development, sample collection forms, drum logs). In that case, the logbook provides a chronology of events, summary of personnel on site, and a narration of events not covered by the standardized forms. It is recommended that the details recorded on the standardized forms not be replicated in the logbook due to the potential for transcription errors and inconsistencies. References to standardized forms must be included in the logbook.

Entries will be recorded legibly in permanent ink (a black ballpoint pen is preferable) and will be signed and dated. No erasures or obliterations will be made. If an incorrect entry is made, the information will be crossed out with a single strike mark which is initialed and dated by the sampler, and the correct information added.

Pencils should not be used. If a ballpoint pen cannot be used because of adverse weather conditions (rain or freezing temperatures), a fine-point Sharpie™ is an acceptable substitute. If conditions are such that only pencil can be used, an explanation must be included in the logbook and the affected data should be photocopied, signed as verified copy, and maintained in the project files as documentation that the data has not been changed.

Information to be recorded should address the questions of who, where, what, when, how, and why. A specific list of information that should be recorded is included in Table 1.

Entries will be objective, factual, and free of personal feelings or inappropriate language. Cryptic notes and undefined abbreviations or acronyms should be avoided.

Information will be made in as close to real time as possible. Information recorded significantly after the fact must be dated as such.

5.2 Field Logbooks

Field logbooks will be bound water-proof field survey books or notebooks with consecutively numbered pages.

Logbooks will be assigned to field personnel, and will be identified by a unique document number. The logbook should be kept in the field person's possession or in a secure location during field activities and archived in the project files upon completion of the field program.

Logbooks should be specific to a project. Multiple projects should not be included in one logbook because of document retention and evidentiary reasons.

The title page of each logbook will contain the following:

- Person to whom the logbook is assigned, AECOM office location, and phone number,
- The logbook number,
- Project name and number, and
- Start and end dates of work covered by the logbook.

Logbook entries documenting sample collection or field measurements must clearly identify the task being completed (for example, water level measurements, headspace readings). Units must be included for all measurements.

For ease of reference, it is recommended that a new page be started for each sampling day and that the time be recorded in the far left column. Each day's entries will be signed and dated by the person making the entries. A diagonal line across the bottom of the page will indicate the end of an entry.

5.3 Standardized Forms

- At a minimum, each form must include a title identifying the activity being documented and the project identification (name and number).
- Each form must be signed and dated by the person completing the form.
- There should be no blank spaces on the form. Each space must be filled in with the information requested or "NA" (not applicable).
- Forms should not be loose, but should be maintained in an organized manner (e.g., clipboards, binders).

5.4 Maps and Drawings

Maps and drawings that document final sampling locations and which are separate from the field logbook must be referenced in the logbook. These maps or drawings must include the project name and number, site identification and location, and must be signed and dated by the person recording the locations.

Maps and drawings must include compass orientation and scale.

5.5 Photographs and Other Photo Documentation

Photo documentation, if permitted at the site, can provide invaluable information on site conditions, sample locations, and the sample itself.

Photographs, videos, or slides must be cross-referenced to entries in the field logbook or on a photo documentation log. Information to be recorded includes name of photographer, date, time, direction

faced, description of subject, and sequential number of the photograph and roll number. An indication of scale is also helpful. Image-enhancing techniques (lenses, film) should also be noted.

5.6 Electronic Files

Electronically captured data may include data logging systems and hand-held electronic recording devices such as PDAs, laptops, or tablet PCs.

Field data that is captured electronically must be cross-referenced in the field logbook. Information to be recorded includes the identity of the person recording the data, instrument make and model number, measurement time and date, and file identification.

Sufficient backup systems must be in place to protect against the loss of data. Electronic files must be saved to a disk or backed up immediately upon completion. The backup disk or other media (CD, flash drive) should then be stored in a secure location separate from the laptop, tablet, or PDA.

Files must be uniquely identified and should be stored in the project files on the network. An unedited version of the file must be maintained and all subsequent manipulations tracked.

6.0 Quality assurance / quality control

Field records provide evidence and support for technical decisions, interpretations, and judgments. It is therefore critical that procedures and systems be in place to ensure that they are legible, identifiable, and retrievable, and protected from loss or damage. In addition, client or regulatory requirements, or the end use of the data (e.g., to support litigation) may determine the format in which the data must be recorded. For example, some projects may require that all field information be recorded in the field logbook and may not allow the use of standardized forms. The requirements necessary to meet the data quality objectives for a particular project will be defined in the site-specific Work Plan and/or Quality Assurance Project Plan (QAPP) hereafter referred to as the project plan.

The field records will be reviewed by the Field Team Leader, or by the Project Manager or his/her designate, for accuracy, completeness, and adherence to the requirements of this POP. At a minimum, this must occur at the end of the field event. For field activities of extended duration, it is recommended that this review occur more frequently (e.g., daily or weekly).

If information recorded in the field is transcribed to another format, the original record must be retained for comparison purposes.

Periodic copying of the field records should be considered to insure against the loss or destruction of the original documents.

7.0 Data and records management

At the end of the field program, original field records must be placed in the project files and maintained for a certain retention time. The duration of record retention will be determined by project-specific requirements, or, in the absence of project requirements, by AECOM Corporate policy.

8.0 Personnel qualifications and training

The Project Manager is responsible for ensuring that project-specific requirements are communicated to the project team and for providing the materials, resources, and guidance necessary to perform the measurements in accordance with this POP and the project plan. In the absence of a Field Team Leader, the Project Manager is responsible for ensuring that field records are reviewed and approved as described below.

The Field Team Leader is responsible for reviewing and approving the field records for accuracy, completeness, and conformance to the procedures in this POP.

Field personnel are responsible for recording data according to the procedures outlined in this POP.

9.0 References

POP 002 Chain of Custody Procedures

POP 010 Packaging and Shipment of Environmental Samples

USACE. 2001. Requirements for the Preparation of Sampling and Analysis Plans. EM 200-1-3. United States Army Corps of Engineers. 1 February 2001.

USEPA. 2004. Contract Laboratory Program Guidance for Field Samplers. OSWER 9240.0-35. EPA540-R-00-003. United States Environmental Protection Agency, Office of Superfund Remediation and Technology Innovation. August 2004.

USEPA. 2001. Environmental Investigations Standard Operating Procedures and Quality Assurance Manual. United States Environmental Protection Agency, Region 4, Athens, GA.November 2001.

USEPA. 1998. Test Methods for Evaluating Solid Wastes. Physical/Chemical Methods (SW-846). Third edition, including all final updates.

USEPA. 1992. RCRA Ground-water Monitoring: Draft Technical Guidance. United States Environmental Protection Agency, Office of Solid Waste, Washington, DC. November 1992.

10.0 Revision History

Revision	Date	Changes
0	June 2010	Original POP

Table 1. Specific Information to Be Recorded

Site name and location
Personnel on site (AECOM, clients, site contacts, regulators, oversight personnel, subcontractors, general public)
Results of phone calls, conversations
Chronology of activities, including mobilization, investigatory activities, and demobilization
Weather conditions (initial and any changes; temperature, barometric pressure, wind conditions, precipitation)
Tidal stage (if applicable)
Inspections of equipment, materials, supplies (problems, corrective action)
Subcontractor name, description of services to be provided, and any issues (problems, stand by time)
Description of major equipment (drill rigs, backhoe, survey vessels, sampling platforms)
Field measurements • Description of procedure • Instruments (make, model, serial number, lamp) • Instrument calibration (date, time, personnel, standard, lot number, standard expiration date, true/measured results, units, corrective action, calibration checks and results) • Results (including units of measure, any correction factors applied, documentation of calculations (if applicable) • Date and time of measurement • Identity of person performing the measurements • Atmospheric conditions (if applicable)
Equipment decontamination procedures and materials
Well information (depth to water, static water depth, condition of well)
Well purging information (procedure, equipment, volumes, pumping rate, criteria for acceptance, time and date)

Presence and detection of immiscible layers, detection method, sampling method
Sampling information • Procedures and equipment (type and material) • Sample (soil) selection criteria/rationale (PID, staining, water table) • Sample location identification (e.g., boring, well identification) • Sample location description (sketch, GPS coordinates, compass and distance measurements from fixed points). • Sample depth • Sample flow rate/drawdown • Sample description (recovery, moisture, color, odor, texture, turbidity, artifacts) • Sample manipulations (filtration, homogenization, compositing, preservation) • Sample date and time • Unique sample ID • Identity of sampler • Sample parameters, containers (size/type), preservation • QC samples (field duplicates, trip blanks, field/equipment blanks, MS/MSDs, split samples) – include ID, associated field sample, method of collection
Any pertinent field observations that could affect data quality (instrument problems, contamination sources)
Deviations from approved plan (schedule modifications, relocation or elimination of sample locations, change orders), including rationale
Investigation-derived waste (IDW) types, volumes, storage, and disposal
Health and safety (H&S) meetings, personal protective equipment (PPE) worn, H&S monitoring

AECOM

Project Operating Procedure

Chain-of-Custody Procedures

Procedure Number: 002

Revision No.: 0

Revision Date: June 2010

Robert Shoemaker, POP Author

Date: June 2010

Joanne Lynch, Project Manager

Date: April 2012

Annual review of this POP has been performed and the POP still reflects current practice.

Initials: _____ Date: _____

Initials: _____ Date: _____

J:\Indl_Service\Project Files\BASF-0760\Cranston RI\7_Deliverables\12. Supplemental RI\AD\Appendix A\BASF POP 002 Chain of Custody Procedures.doc

Contents

1.0 Project Scope and applicability 1

2.0 Health and safety considerations 1

3.0 Interferences 1

4.0 Equipment and materials 2

5.0 Procedures 2

6.0 Quality assurance / quality control 5

7.0 Data and records management 5

8.0 Personnel qualifications and training 6

9.0 References 6

10.0 Revision history 6

List of Figures

Figure 1 Example of Chain-of-Custody

Figure 2 Example Chain-of-Custody Tape

1.0 Project Scope and applicability

Chain-of-custody (COC) is defined as the unbroken trail of accountability that ensures the physical security of samples, data, and records (EPA Glossary of Quality-Related Terms). This project operating procedure (POP) describes COC procedures applicable to environmental samples collected by AECOM during field sampling and analysis programs. Custody procedures within the laboratories analyzing the samples are not addressed.

Samples are physical evidence. The objective of COC procedures is to provide sufficient evidence of sample integrity to satisfy data defensibility requirements in legal or regulatory situations.

The National Enforcement Investigations Center (NEIC) of the U.S. Environmental Protection Agency (EPA) defines custody of evidence in the following manner:

- It is in your actual possession;
- It is in your view, after being in your physical possession;
- It was in your possession and then you locked or sealed it up to prevent tampering; or
- It is in a secure area.

This POP is to be utilized to conduct the work identified in the title of this POP. In the event the Project Manager or Project Team determines that the protocols and procedures listed in this POP are not applicable to the project, the POP will be updated as a subsequent revision.

2.0 Health and safety considerations

The health and safety considerations for the work associated with this POP, including both potential physical and chemical hazards, will be addressed in the site-specific Health and Safety Plan (HASP). In the absence of a site-specific HASP, work will be conducted according to the AECOM Health and Safety Policy and Procedures Manual and/or direction from the Regional Health and Safety Manager

3.0 Interferences

The following may impact the legal or regulatory defensibility of the data:

- The samples are not accompanied by a COC form,
- The information recorded on the COC form is incomplete, inaccurate, or differs from the information recorded on the sample containers,

4.0 Equipment and materials

The following materials are relevant to this procedure:

- COC Form (Figure 1)
- Sample labels
- COC tape or seal (Figure 2)
- Indelible pen or Sharpie™
- Clear plastic sealing tape

Materials identified in related POPs may also be needed

5.0 Procedures

5.1 Pre-sample collection activities

Some measurement methods require preparation of sample collection media or special treatment of sample containers prior to sample collection. In these cases, COC procedures should be initiated with the media preparation or container treatment. This requires that sample identification numbers or media/container identification numbers be assigned. These numbers should be entered on the COC form, leaving room for the subsequent recording of the associated sample numbers. In this variation, the custodian responsible for media preparation or container treatment has the responsibilities outlined in Section 5.2, and the sampler or field sample custodian has the responsibilities stated in Section 5.3 when he or she receives the prepared media or treated containers. There are a number of acceptable approaches to this variation, and the detailed procedures should be defined in the project-specific Quality Assurance Project Plan (QAPP).

5.2 Sample collection phase

As few people as possible should handle the samples. For certain programs, it is helpful if a single person is designated as the sample custodian (the person responsible for the care and custody of the samples until they are transferred to the laboratory for analysis).

While in the field, sampling personnel should be able to testify that tampering of the samples could not occur without their knowledge. Examples of actions taken may include sealing the sample containers with COC tape or locking the samples in a secure area.

If samples are to be shipped by commercial overnight carrier, the field sampler or sample custodian completes a COC form (Figure 1) for each cooler/package of samples and places the original of completed form inside the associated cooler/package before the package is sealed (a copy is retained and kept in the field record files). Each completed COC form should accurately list the sample identification numbers of the samples with which it is packaged, and should contain the identification

number of the COC tape on the cooler/package. Representatives of commercial carriers are not required to sign the COC form. Refer to POP 010 Packaging and Shipment of Environmental Samples for specific packaging procedures.

If samples are hand carried to a laboratory, the person hand carrying the samples is the sample custodian. If the carrier is a different person than the one who filled out the COC form and packaged the samples, then that person transfers custody to the carrier by signing and dating each form in the "Relinquished By" section. The carrier then signs and dates each form in the adjacent "Received By" section. When the carrier transfers the samples to the laboratory, he or she signs and dates each form in the next "Relinquished By" section, and the laboratory sample custodian signs and dates each form in the adjacent "Received By" section.

5.3 Sample labeling

Labeling of samples occurs at the time of sample collection.

Waterproof, adhesive labels are preferred. Labels should be applied to the container, not the lid whenever possible. Additional interior labels may be required for certain biological samples.

Sample tags may be required for certain projects requiring a strict level of legal or regulatory data defensibility. If tags are utilized, their use will be addressed in the project-specific work plan or QAPP.

Labels should be completed in waterproof, indelible ink. Covering the label with clear plastic tape is recommended to protect the legibility of the label and to prevent the label from detaching from the sample container.

The following information should be recorded on the sample label:

- Project identification (project name and number/client/site)
- Field sample identification code (exactly as it appears on the COC form)
- Sampler’s initials
- Date and time of sample collection
- Analyses requested
- Preservation

5.4 Documentation of sample history

Sample history includes, but is not limited to, preparation of sample containers or collection media (for example, wipes), collection, handling (such as subsampling or compositing), storage, shipment, analytical preparation and analysis, reporting, and disposal.

Refer to POP 001 Recording of Field Data, for specific guidance on documentation of field activities, field measurements, and sample collection.

5.5 Documentation of custody

It is recommended that a COC form (Figure 1 or equivalent) be initiated upon sample collection. If this is not feasible for a particular project, the COC form may be initiated at the time of sample packaging. If this is the case, the sample collection records will serve as the initial custody document and will document the collection of the sample (sample location and identification, date and time of collection, sampler, and parameters to be analyzed, including containers and preservatives).

The following information is recorded on the COC form:

- Project identification (AECOM project number, client, site name and location).
- Page number (for example, 1 of 2, 2 of 2).
- Field sample identification code. This code should be unique to the sampling event and to the program. This code should agree exactly with the field sample identification code recorded on the bottle label.
- Sampling point location (optional if recorded elsewhere in field records).
- Date and time of sample collection.
- Sample matrix (soil, water, air, etc.).
- Preservative.
- Analysis requested.
- Number of containers.
- Type of sample (grab or composite). Identifying if aqueous samples have been filtered in the field is recommended.
- Signature(s) of sampling personnel and signatures of all personnel handling, receiving, and relinquishing the samples.
- Date(s) and time(s) of each sample transfer.
- Sampler remarks. These comments may serve to alert the laboratory to highly contaminated samples or identify quality control (QC) sample requirements.
- Airbill number (if shipped by overnight commercial carrier).
- Laboratory name and address.

5.6 COC tape numbers.

The COC is filled out completely and legibly in indelible ink. There should be no unexplained blank spaces. Blank lines should be lined out and initialed and dated.

Data will not obliterated. Corrections are made, if necessary, by drawing a single line through and initialing and dating the error. The correct information is then recorded with indelible ink.

Information on the COC should agree exactly with that recorded on the sample containers. Discrepancies may result in the samples being incorrectly logged into the laboratory or delays in initiating sample analysis.

5.7 Sample receipt and inspection

Upon sample receipt, the coolers or packages are inspected for general condition and the condition of the COC tape. The coolers or boxes are then opened and each sample is inspected for damage.

Sample containers are removed from packing material and sample label information is verified against the COC form.

The condition upon receipt, including any discrepancies or problems, is documented and the COC form is completed by signing and recording the date and time of receipt.

Receipt and inspection of samples by subcontractor analytical laboratories will adhere to written procedures established by the laboratory.

6.0 Quality assurance / quality control

The records generated in this procedure are subject to review by the sampling team leader, project manager, or designee.

The records generated in this procedure will become a part of the evidence reviewed in the data validation process.

7.0 Data and records management

The records generated in this procedure are part of the permanent record supporting the associated measurements and may include, as applicable, the COC forms, sample tags, carrier waybills, and field and laboratory records of sample history (collection, handling, storage, analysis, etc.).

Unanticipated changes to the procedures or materials described in this POP (deviations) should be appropriately documented in the project records.

Records associated with the activities described in this POP should be maintained according to the document management policy for the project.

8.0 Personnel qualifications and training

8.1 Qualifications and training

The individual executing these procedures should have read, and be familiar with, the requirements of this POP.

No specialized skills are necessary in order to implement these procedures; however, an understanding of the concept of custody is useful.

8.2 Responsibilities

The project manager is responsible for providing the project team with the materials, resources and guidance necessary to properly execute the procedures described in this POP.

The individual performing the work is responsible for implementing the procedures as described in this POP and any project-specific work plans.

For certain sampling programs, the project manager, sampling team leader, or designee may assign an individual to serve as sample custodian. This individual is responsible for supervising the implementation of COC procedures in accordance with this POP and any project-specific work plans or QAPP.

9.0 References

American Society for Testing and Materials (ASTM). 2004. Standard Guide for Sample Chain-of-Custody Procedures. D 4840-99 (Reapproved 2004).

POP 010 Packaging and Shipment of Environmental Samples

POP 001 Recording of Field Data

United States Environmental Protection Agency. 2001. Guidance for Preparing Standard Operating Procedures (SOPs). EPA QA/G-6. EPA/240/B-01/004. USEPA Office of Environmental Information, Washington, DC. March 2001.

10.0 Revision history

Revision	Date	Changes
0	June 2010	Original POP

Figure 1. Chain-of-Custody Form

AECOM

CHAIN OF CUSTODY RECORD

Page ____ of ____

Client/Project Name:	Project Location:	Analysis Requested
Project Number:	Field Logbook No.:	
Sampler (Print Name)/(Affiliation):	Chain of Custody Tape Nos.:	
Signature:	Send Results/Report to:	TAT:

Container Type
P – Plastic
A – Amber Glass
G – Clear Glass
V – VOA Vial
O – Other
E – Encore

Preservation
1 – HCl, 4°
2 – H2SO4, 4°
3 – HNO3, 4°
4 – NaOH, 4°
5 – NaOH/ZnAc, 4°
6 – Na2S2O3, 4°
7 – 4°

Matrix Codes:
DW – Drinking Water
WW – Wastewater
GW – Groundwater
SW – Surface Water
ST – Storm Water
W – Water
S – Soil
SL – Sludge
SD – Sediment
SO – Solid
A – Air
L – Liquid
P – Product

Field Sample No./Identification	Date	Time	COMP	GRAB	Sample Container (Size/Mat'l)	Matrix	Preserv.	Field Filtered											Lab I.D.	Remarks

Relinquished by: (Print Name)/(Affiliation) Signature:	Date: Time:	Received by: (Print Name)/(Affiliation) Signature:	Date: Time:	Analytical Laboratory (Destination):
Relinquished by: (Print Name)/(Affiliation) Signature:	Date: Time:	Received by: (Print Name)/(Affiliation) Signature:	Date: Time:	
Relinquished by: (Print Name)/(Affiliation) Signature:	Date: Time:	Received by: (Print Name)/(Affiliation) Signature:	Date: Time:	Sample Shipped Via: UPS FedEx Courier Other Temp blank: Yes No

Serial No. _____

Figure 2. Chain-of-Custody Tape

№	**Signature** _____
	Date _____

AECOM

Project Operating Procedure

Field Calibration of the YSI Water Quality Meter

Procedure Number: 003

Revision No.: 1

Revision Date: June 2010

Robert Shoemaker, POP Author

Date: December 2010

Joanne Lynch, Project Manager

Date: April 2012

Annual review of this POP has been performed and the POP still reflects current practice.

Initials: _____ Date: _____

Initials: _____ Date: _____

Contents

1.0 Project Scope and applicability 1

2.0 Health and safety considerations 1

3.0 Interferences 2

4.0 Equipment and materials 2

5.0 Procedures 3

6.0 Quality assurance / quality control 9

7.0 Data and records management 9

8.0 Personnel qualifications and training 10

9.0 References 10

10.0 Revision History 10

List of Tables

Table 1. Conductivity Temperature Corrections

Table 2. ORP Check Standard Readings

Table 3. Quality Control Criteria

List of Attachments

Attachment 1. Oxygen Solubility and Indicated Pressure

Project Operating Procedure

Field Calibration of the YSI Water Quality Meter

1.0 Project Scope and applicability

The purpose of this project operating procedure (POP) is provide a framework for calibrating sondes used to measure water quality parameters for ground water and surface water. Water quality parameters include temperature, pH, dissolved oxygen, conductivity/specific conductance, and oxidation reduction potential. Turbidity cannot be measured using the portable water quality meters since the method used by the YSI and other models for turbidity measurement is not approved for use by EPA. A separate meter which uses EPA Method 180.1 to measure turbidity must be used.

This POP is written specifically for the YSI model 6-Series Sondes (which include the 600R, 600XL, 600XLM, 6820, 6920 and 6600 models), and the YSI 650 MDS (Multi parameter Display System) display/logger. The general calibration processes discussed herein are applicable to other manufactures sondes and displays/loggers. Consult the manufacturer's instruction manuals for specific procedures.

2.0 Health and safety considerations

All proper personal protection clothing and equipment is to be worn.

The standard solutions for calibrating conductivity contain iodine, potassium chloride and propanol. When using the standards, avoid inhalation, skin contact, eye contact or ingestion. If skin contact occurs, remove contaminated clothing immediately. Wash the affected areas thoroughly with large amounts of water. If inhalation, eye contact or ingestion occurs, consult the Material Data Safety Sheets (MSDS) for prompt action, and in all cases seek medical attention immediately.

All standard solutions for calibration pH contain the following chemicals and warnings:

- pH 4 Solutions: potassium hydrogen phthalate, formaldehyde, water
- pH 7 Solutions: sodium phosphate (dibasic), potassium phosphate (monobasic), water
- pH 10 Solutions: potassium borate (tetra), potassium carbonate, potassium hydroxide, sodium diethylenediamine tetraacetate, water

Avoid inhalation, skin contact, eye contact and ingestion. If skin contact occurs remove contaminated clothing immediately. Wash the affected areas thoroughly with large amounts of water. If inhalation, eye contact or ingestion occurs, consult the MSDS for prompt action, and in all cases seek medical attention immediately.

Standard solutions for calibration of oxidation reduction potential (ORP) contain the following chemicals and warnings:

- potassium ferrocyanide trihydrate
- potassium ferrocyanide
- potassium chloride

Avoid inhalation, skin contact, eye contact, and ingestion. Avoid combining with the pH buffers and with any acids since cyanide may be released. Isolate the ORP solution. Do not dispose with other calibration solutions. If skin contact occurs, wash affected areas thoroughly with large amounts of water. Consult the Health and Safety Plan, and the MSDSs therein.

Standard solutions for calibration of dissolved oxygen contain sodium sulfite and cobalt chloride. Avoid inhalation, skin contact, eye contact, and ingestion. If skin contact occurs, wash affected areas thoroughly with large amounts of water. Consult the Health and Safety Plan, and the MSDSs therein.

3.0 Interferences

Each of the parameters measured with this procedure is subject to various interferences including cross-contamination, turbidity, aeration, and temperature fluctuations. Care must be taken to ensure that the instrument remains in a stable, controlled environment throughout the calibration and monitoring process; and that the conditions under which the samples are analyzed are the same as those under which calibration is conducted.

4.0 Equipment and materials

- Thermometer (with NIST trace)
- pH Buffers of 4, 7, and 10
- Conductivity standards (concentration dependent upon expected field conditions)
- Zobell ORP calibration standard
- Zero Dissolved Oxygen Solution
- Deionized Ultra-Filtered (DIUF) Water
- YSI Sonde with attached pH, Conductivity, Dissolved Oxygen, and ORP probes with clear flow-through cell
- YSI 650 MDS Multiparameter Display System (display logger)
- Sonde communications cable

- Ring stand or similar capable of holding the sonde and flow-through cell upright during low-flow groundwater sampling
- Kimwipes
- Gallon-size plastic freezer bags (e.g. Ziploc) to protect the MDS and the top of the Sonde from rain

5.0 Procedures

All instrument probes must be calibrated before they are used to measure environmental samples, and the calibration should be checked at the end of the sampling day or if any anomalous readings are obtained.

5.1 Set-up

Before performing any calibration procedure the sonde and display/logger must warm-up for at least 15 minutes.

During the warm-up period, set the sonde up on a ring stand.

Prior to calibration, all instrument probes on the sonde must be cleaned according to the manufacturer's instructions. Failure to perform this step can lead to erratic measurements. The probes must also be cleaned by rinsing with deionized water before and after immersing the probe in a calibration solution.

For each of the calibration solutions, provide enough volume so that the probe and the temperature sensor are sufficiently covered. Additional detail on volume is provided under each section and in the manufacturer's instructions.

Check the display/logger to determine the battery level in the display/logger to see if recharging is necessary.

Set up instrument display so that the following items are displayed:

- DO%
- ORP
- DO mg/L
- Cond. µs/cm
- Sp. Cond. µs/cm
- pH

5.2 Temperature

For instrument probes that rely on the temperature sensor (pH, dissolved oxygen/specific conductance, and ORP), the sonde temperature sensor needs to be checked for accuracy against a thermometer that is traceable to the National Institute of Standards and Technology (NIST). This accuracy check should be performed at least once a year, and the date and results of the check kept with the instrument. Temperature checks will be checked by the rental company for rented units, and by the AECOM equipment manager for AECOM-owned units. Prior to mobilizing, obtain the date and results of the check from the equipment room manager or check the outside of the case for rental units. If the check has not been performed within the past year, do not use the instrument. Document the date, results, and company that performed the check on the calibration log sheet or in the field logbook. Below is the verification procedure:

- Allow a container filled with water and the sonde to come to room temperature.
- Place a thermometer that is traceable to the NIST into the water and wait for both temperature readings to stabilize.
- Compare the two measurements. The instrument's temperature sensor must agree with the reference thermometer within the accuracy of the sensor (+/- 0.15°C). If the measurements do not agree, the instrument may not be working correctly and the manufacturer should be contacted.

5.3 Dissolved Oxygen

Dissolved oxygen (DO) content in water is measured using a membrane electrode. The DO probe's membrane and electrolyte solution should be inspected for any damage or air bubbles prior to calibration. If air bubbles or damage are present, replace the membrane according to manufacturer's suggestions. After changing the membrane, it is preferable to wait 12 hours before use to allow the membrane to equilibrate. If this is not possible, note this in the calibration log. YSI 6-Series DO probe be must calibrated using the calibration cup provided with the sonde. Calibration of the DO probe requires inputting the current barometric pressure. The YSI 650 display/logger has a barometer within the unit and automatically provides this during the calibration procedure. The barometric pressure for all units onsite should be checked for agreement between units, or checking using the onsite barometer. Other display/loggers do not supply the barometric pressure, and this must be obtained from other sources. Do not use barometric pressure obtained from meteorology reports as these are usually corrected to sea level.

Calibration is performed using 100% saturated air, and checked immediately after with a solution with zero dissolved oxygen. The calibration check at the end of the day uses 100% saturated air.

5.3.1 DO Calibration

- Place a small amount of water (<1/8") in the bottom of the calibration cup. Engage only one thread of the calibration cap onto the sonde so that the DO probe is readily vented to the atmosphere. Take care to avoid touching the oxygen membrane with the calibration cups and flow-cell. The DO probe and thermistor must not be in contact with the water. Keep the instrument in run

mode and wait approximately 15 minutes for the air in the calibration cup to become water-saturated (100% humidity at atmospheric pressure) and the temperature to equilibrate. Set up the remaining instruments and solutions in the meantime.

- When the temperature has stabilized, go to Calibrate mode - Calibrate DO%
- Record the temperature on the calibration log. Check the barometric pressure reading on the YSI versus the barometer and other YSIs present. Enter the barometric pressure if correction is necessary. Record the barometric pressure on the calibration log. (Note: barometric pressures presented in meteorological reports are generally corrected to sea level. These are not useful for calibrating the sonde, which requires uncorrected barometric pressure).
- When the DO% and temperature readings have stabilized for at least one minute, press enter. Record the number that appears on the screen. Record also the DO mg/L value.
- Check the oxygen solubility at that pressure and temperature on the attached table (Attachment 1) and record under "Std temp/pressure correction." The instrument DO reading should be comparable with the value on the table (within +0.2 mg/L). If not, recalibrate, or replace DO membrane.
- Make up the zero DO solution by filling the calibration cap with DI water, adding approximately 1 gram of sodium sulfite to supersaturate the solution. Add a few crystals of the cobalt chloride (purple salt) and stir. There should be solids on the bottom of the cap. Screw the cap tightly onto the YSI. Water should leak out to indicate that there is no air around the probes.
- Immediately after calibration, if the DO is at or below 0.50 mg/L, record the value on the calibration log. If the number stabilizes at a value > 0.50 mg/L, change the DO membrane. At the end of the day, if the DO is at or above 1.0 mg/L, note the failed criteria and the readings that are impacted, and repeat the analyses at the discretion of the field team leader.
- Remove the cap, and rinse the probes well with DI water. Blot the probes dry, carefully avoiding the DO membrane.

5.3.2 DO End-of-Day Check

- Follow first step in Section 5.3.1.
- Allow the DO% and temperature readings to stabilized for at least one minute. Record the number that appears on the screen. Record also the DO mg/L value.
- Check the oxygen solubility at that pressure and temperature on the attached table (Attachment 1) and record under "Std temp/pressure correction." The instrument DO reading should be comparable with the value on the table (within ±0.5 mg/L).

5.4 pH

The pH of a sample is determined electrometrically using a glass electrode. Choose the appropriate standards that will bracket the expected values at the sampling locations. A two or three-point calibration can be performed. Typically, a three-point calibration using standards pH 4, pH 7, and pH 10 will be required. A calibration check is performed immediately after calibration using the pH 7 standard and a criterion of ±0.05 pH units. A calibration check is also performed at the end of the day using the pH 7 standard and a criteria of 0.3 pH units.

5.4.1 pH Calibration

- Allow the buffered samples to equilibrate to the ambient temperature.
- Remove the calibration cap and clean all of the probes on the sonde with deionized water. Begin with pH 7.00. Wipe with Kimwipe and immerse all the probes in the 7.00 pH solution. Place enough pH 7.00 solution in the calibration cup to immerse the pH probe, reference junction, and thermistor. Return to calibration mode.
- Scroll to pH on the calibration menu. Select 3-pt calibration.
- Enter pH 7.00 when prompted for the first value, and press enter.
- When value is stable for approximately 30 seconds, press enter, and record the number that appears on the screen. The display will indicate that the calibration has been accepted and will prompt the analyst to enter a second pH value.
- Remove probes from solution. Rinse with DI water, wipe carefully, and put all probes in solution pH 4.00. Make sure that there is enough pH 4.00 buffer to immerse the pH probe, reference junction, and thermistor.
- Enter pH 4.00 when prompted for the second pH solution, press enter.
- Allow at least one minute for temperature equilibration. When value is stable for at least 30 seconds, press enter, and record the number that appears on the screen.
- Repeat steps 5, 6, and 7 for the pH 10.00 solution.
- Press enter or esc to go to calibration menu.
- Go to the run mode to perform a calibration check of the pH 7.00 solution. Rinse the probe and immerse in pH 7.00 solution. The reading should be within ± 0.05 pH units of 7.00. If not, recalibrate. Record the reading.

5.4.2 pH End-of-Day Check

- Go to the run mode to perform a calibration check of the pH 7.00 solution.
- Rinse the probe and immerse in pH 7.00 solution. Record the reading. The reading should be within ± 0.3 pH units of 7.00.

- If not, record on the measurements impacted that the pH calibration check criterion was not met.

5.5 Conductivity

Conductivity is used to measure the ability of an aqueous solution to carry an electrical current. Specific conductance is the conductivity value corrected to 25°C. Note that the pH buffers are highly conductive and will adversely impact calibration of conductivity. Thoroughly rinse the probes after performing pH calibration, and then pre-rinse the probe with the conductivity solution to be used.

EPA recommends that conductivity be calibrated using standards that bracket the range of concentrations expected. Conductivities in groundwater frequently range below 1,000 µS/cm; however YSI does not recommend calibration with standards below 1,000 µS/cm because interference with the instrument from outside electrical noise (RF) may be a factor. Since the calibration for conductivity is a 1-point calibration, and expected conductivities will generally be less than 1,000 µS/cm, calibrate with the 1,000 µS/cm standard, and perform a check with a lower conductivity solution to bracket the range (e.g. 100 µS/cm).

5.5.1 Conductivity Calibration

- Carefully rinse the probes in DIUF, then in the first conductivity solution to be used.
- Immerse all probes completely in the conductivity calibration solution. Make sure that the thermistor is immersed, and the conductivity cell is immersed past the vent hole. Gently tap the side of the calibration cup to dislodge any air bubbles trapped inside the cell.
- Scroll to conductivity on the screen. Select calibrate to µS/cm. Check the standard solution on the temperature correction table (Table 1, below), or the table supplied with the bottle, and enter the corrected conductivity value. (Both should be in µs/cm.)
- Press enter and wait for the readings to stabilize. Press enter. Record the readings for conductivity and specific conductivity in the calibration log. Do not exit conductivity.
- Do not indicate “accept” when the calibration indicates “Out of Range.” Attempt to recalibrate. If the problem persists, use another instrument. Return the instrument to the vendor or equipment room.
- Perform a check of the calibration. Remove the probes from the solution. Rinse with the next conductivity solution. Immerse all probes in the conductivity calibration solution. Allow the number to stabilize and record the values for conductivity and specific conductivity in the calibration log. If the specific conductivity result is not within 5% of the value on the bottle, recalibrate. Remove probes from solution and rinse with DI water. Wipe dry.

5.5.2 Conductivity End-of-Day Check

- Rinse the probes with the conductivity solution. Immerse all probes in the conductivity calibration solution.
- Allow the number to stabilize and record the values for conductivity and specific conductivity in the calibration log. If the specific conductivity result is not within 5% of the value on the bottle, note on the measurements obtained that the conductivity calibration check criteria were not met.
- Remove the probes from solution and rinse with DI water. Wipe dry.

5.6 Oxidation Reduction Potential

ORP will be checked for accuracy, and will only be field calibrated if the calibration check fails criteria.

5.6.1 ORP Calibration

- Switch to run mode. Gently mix the ORP solution and open the packet. Put all but the DO probe in the ORP solution. Allow to stabilize and record reading. If reading is not within ±10mV of the actual value corrected for temperature (see table below), proceed to next step.
- Go to Calibration mode. Scroll to ORP and press enter. Enter ORP value (corrected for temperature - see above) and press enter. When the number is stable for 20 seconds, press enter and record the number. If instrument says "Out of Range," do not accept the value: Use a different instrument. If a different instrument is not available, record the number and note that it is not within limits.

5.6.2 ORP End-of-Day Check

- Switch to run mode.
- Gently mix the ORP solution and open the packet. Put all but the DO probe in the ORP solution.
- Allow to stabilize and record reading. If reading is not within ±10mV of the actual value corrected for temperature (see table below), note on the measurements affected that the criterion for ORP check was not met.

5.7 Close up Instrument

- Replace clean cap over probes.
- Select run mode. Reset the parameters to the following:
  - pH
  - specific conductivity
  - ORP

- Temperature
- DO mg/L
- Shut off computer, and return to case

6.0 Quality assurance / quality control

6.1 Quality Control

Criteria are summarized in Table 3.

6.2 Pollution Prevention

Containers used to calibrate the probes shall be sized to use the smallest amount of standard possible but still accommodate all probes which need to be in the calibration solution such that they are adequately covered.

Conductivity and pH calibration solutions may be reused at the end of the day with caution if properly stored. However, a calibration check that reuses standard but does not meet criteria should be re-checked with fresh standard, and calibration should be conducted with fresh standards.

6.3 Waste Management

Unused calibration standards should be returned to the equipment room manager for proper disposal. Do not combine ORP standards with other standards since cyanide could be released.

7.0 Data and records management

Calibration logsheets shall be used to document the details of instrument calibration and calibration checks.

The site logbook should be used to note when instrument calibration and instrument calibration checks were conducted, and should reference the calibration logsheets for details.

Readings measured by instruments that are subsequently found to be outside of criteria during the calibration check shall be documented on the sampling worksheet used to document the sample collection.

8.0 Personnel qualifications and training

The project manager is responsible for ensuring that project-specific requirements are communicated to the project team and for providing the materials, resources, and guidance necessary to perform the measurements in accordance with this POP and the project plan.

The field operator is responsible for verifying that the YSI is in proper operating condition prior to use and for implementing the calibration and measurement procedures in accordance with this POP and the project plan.

9.0 References

U.S. Environmental Protection Agency Region I (U.S. EPA-NE). 2010. Standard Operating Procedure Calibration of Field Instruments (temperature, pH, dissolved oxygen, conductivity/specific conductivity, oxidation/reduction potential [ORP], and turbidity), Revision 2. January 19.U.S.

Environmental Protection Agency Region I (U.S. EPA-NE). 2002. Standard Operating Procedure for Calibration and Field Measurement Procedures for the YSI Model 6-Series Sondes (Including: Temperature, pH, Specific Conductance, Turbidity, and Dissolved Oxygen), Revision I. May 31.

U.S. Environmental Protection Agency Region I (U.S. EPA-NE). 2006. Final QA Bulletin: Calibration of Dissolved Oxygen Meters, Revision 0. March.

YSI, Inc. (YSI). 2002. YSI Calibration Procedures: Profiling and Logging, www.water-monitor.com. Dec 22.

10.0 Revision History

Revision	Date	Changes
0	June 2010	Original POP
1	December 2010	+/- 5% conductivity for calibration check at end of the day

Table 1: Conductivity Temperature Corrections

Temperature, °C	100 µS/cm	1,000 µS/cm	10,000 µS/cm
5.0	--	700	7260
10.0	--	718	7437
11.0	--	736	7614
12.00	--	754	7793
13.0	--	773	7972
14.0	--	791	8153
15.0	82	814	8615
16.0	84	833	8800
17.0	85	852	8987
18.0	87	870	9175
19.0	89	889	9364
20.0	91	908	9555
21.0	93	927	9747
22.0	94	947	9941
23.0	96	966	10136
24.0	98	985	10332
25.0	100	1004	10530
26.0	102	1024	10730
27.0	104	1043	10930
28.0	106	1062	11132
29.0	108	1082	11336
30.0	110	1102	11541
31.0	112	1121	11748
32.0	114	1141	11955
33.0	116	1161	12165
34.0	119	1181	12375
35.0	121	1201	12588

Table 2: ORP Check Standard Readings

Temperature, °C	100 mV Standard Solution
10	124.4
15	116.7
20	109.1
25	100
30	93.1
35	84.9
40	76.3

Table 3: Quality Control Criteria

Parameter	Beginning of Activities				End-of-Day	
	Calibration		Calibration Check		Calibration Check	
	Standard	Criteria	Standard	Criteria	Standard	Criteria
Temperature	NIST Thermometer	± 0.15 °C	NA	NA	NA	NA
Dissolved Oxygen	100 % Saturated	± 0.2 mg/L	0.0 mg/L	< 1.0 mg/L	100% Sat	± 0.5 mg/L
pH	Bracket anticipated (pH 7.00, 4.00, 10.00)	NA	pH 7.00	± 0.05 pH	pH 7.00	± 0.3 pH
Conductivity	Bracket anticipated (≥ 1,000 µS/cm)	NA	Bracket anticipated	± 5%	Same as for calibration	± 5%
Oxidation-Reduction Potential	Only if check fails: 100 mV Zobell solution	NA	100 mV Zobell solution	± 10mV	100 mV Zobell solution	± 10mV

Attachment 1. Oxygen Solubility and Indicated Pressure

AECOM

Project Operating Procedure

Operation and Calibration of a Photoionization Detector

Procedure Number: 004

Revision No.: 0

Revision Date: June 2010

Robert Shoemaker, POP Author

Date: June 2010

Joanne Lynch, Project Manager

Date: April 2012

Annual review of this POP has been performed and the POP still reflects current practice.

Initials: _____ Date: _____

Initials: _____ Date: _____

Contents

1.0 Project Scope and applicability 1

2.0 Health and safety considerations 2

3.0 Interferences 2

4.0 Equipment and materials 2

5.0 Procedures 3

6.0 Quality assurance / quality control 5

7.0 Data and records management 5

8.0 Personnel qualifications and training 6

9.0 References 6

10.0 Revision History 6

Project Operating Procedure

Operation and Calibration of a Photoionization Detector

1.0 Project Scope and applicability

1.1 Purpose and Applicability

This document describes the procedures that will be followed by field staff for operation and calibration of a photoionization detector (PID). The PID is primarily used by AECOM personnel for safety and survey monitoring of ambient air, determining the presence of volatiles in soil and water, and detecting leakage of volatiles.

PIDs routinely used by AECOM personnel include the Photovac Microtip, Thermoelectron 580EZ, and MiniRAE 2000. Personnel responsible for using the PID should first read and thoroughly familiarize themselves with the instrument instruction manual.

1.2 Principle of Operation

The PID is a non-specific vapor/gas detector. The unit generally consists of a hand-held probe that houses a PID, consisting of an ultraviolet (UV) lamp, two electrodes, and a small fan which pulls ambient air into the probe inlet tube. The probe is connected to a readout/control box that consists of electronic control circuits, a readout display, and the system battery. Units are available with UV lamps having an energy from 9.5 electron volts (eV) to 11.7 eV.

The PID analyzer measures the concentration of trace gas present in the atmosphere by photoionization. Photoionization occurs when an atom or molecule absorbs a photon of sufficient energy to release an electron and become a positive ion. This will occur when the ionization potential of the molecule (in electron volts (eV)) is less than the energy of the photon. The source of photons is an ultraviolet lamp in the probe unit. Lamps are available with energies ranging from 9.5 eV to 11.7 eV. All organic and inorganic vapor/gas compounds having ionization potentials lower than the energy output of the UV lamp are ionized and the resulting potentiometric change is seen as a positive reading on the unit. The reading is proportional to the concentration of organics and/or inorganics in the vapor.

Sample gases enter the probe through the inlet tube and enter the ion chamber where they are exposed to the photons emanating from the UV lamp. Ionization occurs for those molecules having ionization potentials near to or less than that of the lamp. A positive- biased polarizing electrode causes these positive ions to travel to a collector electrode in the chamber. Thus the ions create an electrical current which is amplified and displayed on the meter. This current is proportional to the concentration of trace gas present in the ion chamber and to the sensitivity of that gas to photoionization.

In service, the analyzer is first calibrated with a gas of known composition equal to, close to, or representative of that to be measured. Gases with ionization potentials near to or less than the energy of the lamp will be ionized. These gases will thus be detected and measured by the analyzer. Gases with ionization potentials greater than the energy of the lamp will not be detected. The ionization potentials of the major components of air, i.e., oxygen, nitrogen, and carbon dioxide, range from about

12.0 eV to 15.6 eV and are not ionized by any of the lamps available. Gases with ionization potentials near to or slightly higher than the lamp are partially ionized, with low sensitivity.

1.3 Specifications

Refer to the manufacturer's instructions for the technical specifications of the instrument being used. The operating concentration range is typically 0.1 to 2,000 ppm isobutylene equivalent.

2.0 Health and safety considerations

The health and safety considerations for the site, including both potential physical and chemical hazards, will be addressed in the site-specific Health and Safety Plan (HASP). In the absence of a site-specific HASP, work will be conducted according to the AECOM Health and Safety Policy and Procedures Manual and/or direction from the Regional Health and Safety Manager.

Only PIDs stamped Division I Class I may be used in explosive atmospheres. Refer to the project HASP for instructions pertaining to instrument use in explosive atmospheres.

3.0 Interferences

Regardless of which gas is used for calibration, the instrument will respond to all analytes present in the sample that can be detected by the type of lamp used in the PID.

Moisture will generate a positive interference in the concentration measured for a PID and is characterized by a slow increase in the reading as the measurement is made. Care must be taken to minimize uptake of moisture to the extent possible. Refer to the manufacturers' instructions for care, cleaning, and maintenance.

Uptake of soil into the PID must be avoided as it will compromise instrument performance by blocking the probe, causing a positive interference, or dirtying the PID lamp. Refer to the manufacturers' instructions for care, cleaning, and maintenance.

The user should listen to the pitch of the sampling pump. Any changes in pitch may indicate a blockage and corrective action should be initiated.

4.0 Equipment and materials

- Calibration Gas: Compressed gas cylinder of isobutylene in air or similar stable gas mixture of known concentration. The selected gas should have an ionization potential

similar to that of the vapors to be monitored, if known. The concentration should be at 50-75% of the range in which the instrument is to be calibrated.

- Regulator for calibration gas cylinder
- Approximately 6 inches of Teflon® tubing
- Tedlar bag (optional)
- Commercially-supplied zero grade air (optional)
- "Sharpie" or other waterproof marker
- Battery charger
- Moisture traps
- Spare lamps
- Manufacturer's instructions
- Field data sheets or logbook/pen

5.0 Procedures

5.1 Preliminary Steps

Preliminary steps (battery charging, check-out, calibration, maintenance) should be conducted in a controlled or non-hazardous environment.

5.2 Calibration

The PID must be calibrated in order to display concentrations in units equivalent to ppm. First a supply of zero air (ambient air or from a supplied source), containing no ionizable gases or vapors is used to set the zero point. A span gas, containing a known concentration of a photoionizable gas or vapor, is then used to set the sensitivity.

Calibrate the instrument according to the manufacturer's instructions. Record the instrument model and identification number, the initial and adjusted meter readings, the calibration gas composition and concentration, and the date and the time in the field records.

If the calibration cannot be achieved or if the span setting resulting from calibration is 0.0, then the lamp must be cleaned.

5.3 Operation

Turn on the unit and allow it to warm up (minimum of 5 minutes). Check to see if the intake fan is functioning; if so, the probe will vibrate slightly and a distinct sound will be audible when holding the probe casing next to the ear. Also, verify on the readout display that the UV lamp is lit.

Calibrate the instrument as described in Section 5.2, following the manufacturer's instructions. Record the calibration information in the field records.

The instrument is now operational. Readings should be recorded in the field records.

When the PID is not being used or between monitoring intervals, the unit may be switched off to conserve battery power and UV lamp life; however, a "bump" test should be performed each time the unit is turned on and prior to taking additional measurements. To perform a bump test, connect the outlet tubing from a Tedlar bag containing a small amount of span gas to the inlet tubing on the unit and record the reading. If the reading is not within the tolerance specified in the project plan, the unit must be recalibrated.

At the end of each day, recheck the calibration. The check will follow the same procedures as the initial calibration (Section 5.2) except that no adjustment will be made to the instrument. Record the information in the field records.

Recharge the battery after each use (Section 5.4).

When transporting, ensure that the instrument is packed in its stored condition in order to prevent damage.

5.4 Routine Maintenance

Routine maintenance associated with the use of the PID includes charging the battery, cleaning the lamp window, replacing the detector UV lamp, replacing the inlet filter, and replacing the sample pump. Refer to the manufacturer's instructions for procedures and frequency.

All routine maintenance should be performed in a non-hazardous environment.

5.5 Troubleshooting Tips

One convenient method for periodically confirming instrument response is to hold the sensor probe next to the tip of a Sharpie. A significant reading should readily be observed.

Air currents or drafts in the vicinity of the probe tip may cause fluctuations in readings.

A fogged or dirty lamp, due to operation in a humid or dusty environment, may cause erratic or fluctuating readings. The PID should never be operated without the moisture trap in place.

Moving the instrument from a cool or air-conditioned area to a warmer area may cause moisture to condense on the UV lamp and produce unstable readings.

A zero reading on the meter should not necessarily be interpreted as an absence of air contaminants. The detection capabilities of the PID are limited to those compounds that will be ionized by the particular probe used.

Many volatile compounds have a low odor threshold. A lack of meter response in the presence of odors does not necessarily indicate instrument failure.

When high vapor concentrations enter the ionization chamber in the PID the unit can become saturated or “flooded”. Remove the unit to a fresh air environment to allow the vapors to be completely ionized and purged from the unit.

6.0 Quality assurance / quality control

The end use of the data will determine the quality assurance requirements that are necessary to produce data of acceptable quality. These quality assurance requirements will be defined in the site-specific Work Plan or Quality Assurance Project Plan (QAPP), hereafter referred to as the project plan.

Calibration of the PID will be conducted at the frequency specified in the project plan. In the absence of project-specific guidance, calibration will be performed at the beginning of each day of sampling and will be checked at the end of the sampling day or whenever instrument operation is suspect. The PID will sample a calibration gas of known concentration. The instrument must agree with the calibration gas within ±10%. If the instrument responds outside this tolerance, it must be recalibrated.

Checks of the instrument response (Section 5.5) should be conducted periodically and documented in the field records.

7.0 Data and records management

Safety and survey monitoring with the PID will be documented in a bound field logbook, or on standardized forms, and retained in the project files. The following information is to be recorded:

- Project name and number.
- Instrument manufacturer, model, and identification number.
- Operator's signature.
- Date and time of operation.
- Calibration gas used.
- Calibration check at beginning and end of day (meter readings before adjustment).
- Span setting after calibration adjustment.
- Meter readings (monitoring data obtained).
- Instances of erratic or questionable meter readings and corrective actions taken.

- Instrument checks and response verifications – e.g., battery check, magic marker response (Section 5.5) or similar test.

8.0 Personnel qualifications and training

The project manager is responsible for ensuring that project-specific requirements are communicated to the project team and for providing the materials, resources, and guidance necessary to perform the measurements in accordance with this POP and the project plan.

The field operator is responsible for verifying that the PID is in proper operating condition prior to use and for implementing the calibration and measurement procedures in accordance with this POP and the project plan.

9.0 References

United States Environmental Protection Agency. Environmental Investigations Standard Operating Procedures and Quality Assurance Manual (EISOPQAM). USEPA, Region 4, SESD, Enforcement and Investigations Branch, Athens, GA. November 2001.

10.0 Revision History

Revision	Date	Changes
0	June 2010	Original POP

AECOM

Project Operating Procedure

Water Level Measurements

Procedure Number: 005

Revision No.: 0

Revision Date: June 2010

Robert Shoemaker, POP Author

Date: June 2010

Joanne Lynch, Project Manager

Date: April 2012

Annual review of this POP has been performed and the POP still reflects current practice.

Initials: _____ Date: _____

Initials: _____ Date: _____

Contents

1.0 Project Scope and applicability 1

2.0 Health and safety considerations 2

3.0 Interferences 2

4.0 Equipment and materials 2

5.0 Procedures 3

6.0 Quality assurance / quality control 5

7.0 Data and records management 6

8.0 Personnel qualifications and training 6

9.0 References 7

10.0 Revision History 7

1.0 Project Scope and applicability

This Project Operating Procedure (POP) defines the methods to be used for measuring the depth to groundwater and total depth of groundwater monitoring wells and piezometers. Similar procedures can also be used to measure the depth to water in other structures such as catch basins or cisterns or in surface water bodies from fixed structures such as bridges, culverts, or piers.

Water level and well depth measurements collected from monitoring wells or piezometers may be used for the following purposes, among others:

- To evaluate the well condition (potential silt accumulation, height of water column, etc.);
- To establish sampling requirements, such as purge volumes and drawdown during purging;
- To calculate the horizontal hydraulic gradient and the direction of groundwater flow;
- To calculate the vertical hydraulic gradient, if well nests are used (i.e., the direction of groundwater flow in the vertical plane);
- To evaluate the effects of manmade and natural stresses on the groundwater system; and
- To calculate other important hydrogeologic characteristics (e.g., measuring drawdown during slug tests or aquifer pumping tests).

This information, when combined with other location-specific information, is important in understanding the current distribution of constituents in groundwater and their potential for migration in the future. Hydrogeologic characterization is important not only in evaluating potentially contaminated groundwater but also in evaluating non-contaminated groundwater resources.

Some wells may contain a light non-aqueous phase liquid (LNAPL) floating on the water surface. The procedures outlined in this POP may be used to measure water levels in such wells, but the results may not be representative of the hydraulic head/potentiometric level.

There are other methods for measuring water depths than those described in this POP, for example, a weighted tape with or without a sounding device (“plopper”), pressure transducers, air line pressure, strip recorders, etc. This POP addresses the methods in most common and regular use.

This POP is to be utilized to conduct the work identified in the title of this POP. In the event the Project Manager of Project Team determines that the protocols and procedures listed in this POP are not applicable to the project, the POP will be updated as a subsequent revision.

2.0 Health and safety considerations

The health and safety considerations for the work associated with this POP, including both potential physical and chemical hazards, will be addressed in the site specific Health and Safety Plan (HASP). In the absence of a site-specific HASP, work will be conducted according to the AECOM Health and Safety Policy and Procedures Manual and/or direction from the Regional Health and Safety Manager.

3.0 Interferences

Potential interferences could result in inaccurate readings if the sensor on the water level meter is wet or dirty, or if the cable cannot be kept vertically upright (for example, from a well that is not plumb or from a bridge in windy conditions). Care shall be taken to keep the probe clean, and to take appropriate measures to reduce these interferences when measuring water levels. The probe may also be shaken to remove water or other fluids that may adhere to the probe. If there is any concern that a particular reading may not be accurate, this shall be noted in the field log book.

If LNAPL is present in a well, the measured depth to water may not be representative of the hydraulic head/potentiometric level.

Some water level meters (especially oil/water interface probes) may rely on optical technology for readings. In these cases, the readings may be influenced by the presence of light. While this is not an issue in wells, it may be at surface water bodies.

The measured depth to water is not always representative of the hydraulic head in the aquifer. Interferences may include barometric pressure effects, timing during tidal cycles, well construction details, confined/artesian aquifers, well efficiency, etc. Where such influences may be important, the project-specific work plan should specify any corrective measures or additional data to be collected. Interpretation and use of water level data should be performed by a trained specialist.

4.0 Equipment and materials

4.1 Electronic Water Level Meter

Electronic water level meters consist of a spool of small-diameter cable (or tape) with a weighted probe attached to the end. The cable (or tape) is marked with measurement increments in feet (ft) or meters (m) (accurate to 0.01 ft/0.01m), with the zero point being the sensor of the probe. When the probe comes in contact with the water, an electrical circuit is closed, and a light and/or buzzer within the spool will signal the contact. The cable must be of sufficient length the reach to the expected depth of the water to be measured. The probe shall be tested (using water containing dissolved ions) at the start of the field program to ensure proper operation.

An oil/water interface probe may be used to measure water depths. However, in some cases, there may be increased risk of cross-contamination using a probe that is regularly placed in separate phase liquids. Where such risks are considered significant, project-specific requirements will specify that oil-water interface probes are not to be used in wells where no separate-phase liquids are expected.

4.2 Other Materials

Other materials that may be required:

- Health and safety supplies (as required by the HASP)
- Equipment decontamination materials, including absorbent pads if appropriate
- Plastic sheeting or bucket for resting instrument off the ground
- Water level field form (if applicable)
- Well construction records
- Approved plans (e.g., Work Plan, Quality Assurance Project Plan, HASP)
- Field project logbook/waterproof pen
- Appropriate hand tools and keys to access monitoring wells

5.0 Procedures

5.1 Summary of method

Measurements will involve measuring the depth to water and/or total well depth to the nearest 0.01 ft/0.01m using an electronic water level meter. The depths within wells will be measured from the top of casing (typically the inner casing) at the surveyed elevation point. This reference point should be marked so that readings are consistently taken from the same reference point. Depths to surface water may be similarly measured from a marked reference point on the fixed structure (e.g., bridge, culvert, pier, wharf) passing over or bordering the surface water body.

5.2 General preparation

Well records review: Well completion diagrams should be reviewed to determine well construction characteristics, including the location of the reference point and the total depth of the well. Historic static water level measurements and survey information may also be reviewed.

Well access: Many wells may be locked for security reasons. The necessary procedures and equipment to access the wellhead shall be identified prior to entering the site.

Equipment: There are many different water level meters available. Field personnel should make sure the appropriate equipment is used based on well construction details (e.g., well diameter, anticipated depth to water). The specific equipment to be used should be inspected. Field personnel should be sure the equipment is in proper working order, and the measurement increment marks are legible.

The type of power supply (e.g., type of batteries) should be determined so that an appropriate back-up supply can be obtained if needed. Sometimes water level meters may be repaired by removing a length of cable near the sensor and re-splicing the cable to the sensor. If this kind of repair has taken place, the measurement markings on the cable are no longer accurate. This condition should be observed and noted, and if appropriate, a replacement water level meter may be obtained as an alternative to correcting the water level measurement for the length of the splice.

Calibration: Manufacturer's instructions, if any, for calibrating or maintaining the accuracy of the instrument shall be followed. If there are project-specific requirements for calibration, these shall also be implemented as outlined in project-specific plans.

Equipment decontamination: All down-hole equipment should be decontaminated prior to and after use and between well locations in accordance with project-specific requirements. Note that some water level probes may be made of materials that are incompatible with certain decontamination solvents.

Order of measurement: For some projects, there may be a specific order in which measurements are to be collected, for example, from the least to most contaminated wells. Any such requirements will be specified in the project-specific plans.

Opening the well: Prior to accessing the well, the wellhead should be cleared of debris and/or standing water. For example, it is common to find standing water in flush mount wellheads that, if not removed, will enter the monitoring well, potentially causing inaccurate water level measurements and/or contamination of the groundwater. Nothing from the ground surface should be allowed to enter the well. Once the wellhead is clear, open the well to obtain the measurements. In some cases, it may be necessary to allow the water level to equilibrate prior to measurement (e.g., wells with fully submerged screened intervals).

5.3 Measurement procedures

At each location (well, piezometer, bridge/culvert, pier/wharf, etc.), determine the location of the surveyed elevation mark. For wells, general markings may include either a notch in the riser pipe or a permanent ink mark on the riser pipe. Some projects may specify a consistent reference point for all wells, for example, the highest point on the riser or the northernmost point. For monitoring surface water levels, there may be a painted mark on an existing structure or the reference point must be known if not marked.

If the reference point is not marked, a point may be selected and clearly and permanently marked to be used for future measurements. If this is done, the project manager must be notified to arrange for the elevation of the new reference point to be surveyed.

To obtain a water level measurement, lower the probe of the water level meter down into the water in the well until the audible sound of the unit is detected or the light on an electronic sounder illuminates. In wells, the probe shall be lowered slowly into the well to avoid disruption of formation water and creation of turbulent water within the well. At this time, the precise measurement should be determined (to the nearest 0.01 ft/0.01m) by repeatedly raising and lowering the tape to converge on the exact measurement. Obtain the reading from the stadia-marked cable where it crosses the

surveyed reference point. If the cable is not marked to the nearest 0.01ft/0.01m, a manual rule may be used to interpolate between marked measurements.

Record the water level measurement as well as the location identification number, measuring point (surveyed elevation point), date, time, and weather conditions in the field logbook and/or field form. Any problems with the condition of the well should be noted so that appropriate maintenance can be performed.

To measure the total depth of a well, lower the probe (turn down signal as appropriate) slowly to the bottom of the well. For deep wells or wells with a soft or silty base, the depth may be difficult to determine. It may be helpful to lower the probe until there is slack in the tape, and gently pull up until it feels as if there is a weight at the end of the tape. Obtain the depth reading (to the nearest 0.01 ft/0.01m) from the cable where it crosses the surveyed reference point. If the cable is not marked to the nearest 0.01ft/0.01m, a manual rule may be used to interpolate between marked measurements.

Record the total well depth in the field logbook and/or field form.

The meter will be decontaminated in accordance with appropriate project-specific requirements and equipment use and care requirements. If the probe was in contact with separate-phase liquids, the potential for cross-contamination is greater, so appropriate care should be taken during decontamination, as specified in project-specific requirements. It is important to avoid placing the measuring tape and probe directly on the ground surface (to minimize potential cross-contamination) or allowing the cable to become kinked (which affects the accuracy of the measured depths).

5.4 Special conditions

Wells containing pumps or other equipment. It may be difficult to obtain accurate water level depths in wells where down-hole equipment is present. There may not be sufficient space within the well for the water level meter, or the meter cable may become bound up in the tubing, cables, or other equipment in the well. It is preferable to remove down-hole equipment when feasible. If removal of the equipment is not feasible and there is a reasonable chance of getting the meter caught in the well and not being able to remove it, it may be preferable to avoid collecting water level data.

Drinking water wells. The water level meter represents a potential source of surface contamination when introduced into drinking water wells, particularly for bacteriological contamination. If it is necessary to measure water level depths in drinking water wells using the procedures in this POP, appropriate disinfection procedures should be performed.

6.0 Quality assurance / quality control

Field personnel will follow site-specific quality assurance guidelines. Where measured depths are not consistent with well records or previously measurements, the depths should be re-measured, verified, and documented in the field records.

Field duplicates of the depth-to-water measurements will be obtained if required by and at the frequency specified in project-specific requirements. To collect a field duplicate measurement, the water level probe will be fully withdrawn from the well, then re-lowered to obtain a second reading of the depth to water. No more than a few minutes should elapse between the two measurements. Field duplicates will not be obtained if water levels are changing rapidly, for example, during pumping tests.

Manufacturer's instructions, if any, for calibrating or maintaining the accuracy of the instrument shall be followed.

7.0 Data and records management

All field information will be recorded in the field logbook or on a field collection form by field personnel. Recording of field data will follow the guidance presented in POP 001 Recording of Field Data.

Unanticipated changes to the procedures or materials described in this POP (deviations) will be appropriately documented in the project records.

Records associated with the activities described in this POP will be maintained according to the document management policy for the project.

8.0 Personnel qualifications and training

8.1 Qualifications and training

The individual executing these procedures must have read, and be familiar with, the requirements of this POP.

Collecting water level measurements is a relatively simple procedure requiring minimal training and a relatively small amount of equipment. It is recommended that the collection of water level measurements be initially supervised by more experienced personnel.

Field personnel must be health and safety trained as required by the project conditions and local/national standards.

8.2 Responsibilities

The project manager is responsible for providing the project team with the materials, resources and guidance necessary to properly execute the procedures described in this POP.

The individual performing the work is responsible for implementing the procedures as described in this POP and any project-specific work plans.

Field personnel are responsible for the proper use, maintenance, and decontamination of all equipment used for obtaining water level measurements, as well as proper documentation in the field logbook or field forms (as appropriate).

9.0 References

American Society for Testing Materials. 1993. ASTM Standard D4750, Test Method for Determining Subsurface Liquid Levels in a Borehole or Monitoring Well (Observation Well).

Driscoll, Fletcher G. 1986. Groundwater and Wells. St. Paul Minnesota: The Johnson Division.

POP 001 Recording of Field Data

United States Environmental Protection Agency. 2001. Guidance for Preparing Standard Operating Procedures (SOPs). EPA QA/G-6. EPA/240/B-01/004. USEPA Office of Environmental Information, Washington, DC. March 2001.

10.0 Revision History

Revision	Date	Changes
0	June 2010	Original POP

AECOM

Project Operating Procedure

Surface and Subsurface Soil Sampling Procedures

Procedure Number: 006

Revision No.: 0

Revision Date: June 2010

Robert Shoemaker, POP Author

Date: June 2010

Joanne Lynch, Project Manager

Date: April 2012

Annual review of this POP has been performed and the POP still reflects current practice.

Initials: _____ Date: _____

Initials: _____ Date: _____

Contents

1.0 Project Scope and applicability 1

2.0 Health and safety considerations 1

3.0 Interferences 2

4.0 Equipment and materials 2

5.0 Procedures 4

6.0 Quality assurance / quality control 9

7.0 Data and records management 10

8.0 Personnel qualifications and training 10

9.0 References 10

10.0 Revision History 11

List of Attachments

Attachment 1. Example Boring Log

1.0 Project Scope and applicability

This project operating procedure (POP) is applicable to soil sampling. The procedure includes surface and subsurface sampling by various methods using hand auguring, test pit, direct-push, and split-spoon equipment. The procedure includes soil sampling for volatile organic compounds (VOCs). For project specific information (e.g. sampling depths, equipment to be used, and frequency of sampling), refer to the Work Plan, which takes precedence over these procedures.

Surface soil sampling, typically considered to be up to two feet below ground surface by EPA standards, is typically accomplished using hand tools such as shovels or hand augers. Test pit samples are considered subsurface samples, although normally collected via hand tools similar to surface soil sampling or by excavation machinery. Direct-push and split-spoon sampling offer the benefit of collecting soil samples from a discrete or isolated subsurface interval, without the need of extracting excess material above the target depth. These methods dramatically reduce time and cost associated with disposal of material from soil cuttings when compared to test pit sampling. In addition, direct-push and split-spoon sampling methods can obtain samples at targeted intervals greater than 15 feet in depth, allowing for discrete depth soil sampling while speeding up the sampling process. Direct-push methods work best in medium to fine-grained cohesive materials such as medium to fine sands, silts, and silty clay soils. Split-spoon sampling works well in all types of soil, but is somewhat slower than direct-push methods. Samples are composited so that each sample jar to be analyzed contains a homogenized representative portion of the interval samples. Due to potential loss of analytes, samples for volatile analysis are not composited. Samples for chemical analysis can be collected by any of the above-mentioned sampling methods, as disturbed soil samples. Undisturbed samples are collected, sealed, and sent directly to the laboratory for analysis. For undisturbed samples, the samples are not homogenized.

2.0 Health and safety considerations

All calibration, maintenance and servicing of soil sampling equipment and instrumentation should be performed in a safe area, away from hazardous locations.

Refer to the Site-Specific Health and Safety Plan for health and safety issues and equipment/instrumentation needed. General health and safety equipment includes a combustible gas indicator (CGI), photo/flame ionization detector (PID/FID), tyvek, gloves, safety glasses, and steel-toe boots.

The Site-Specific Health and Safety Plan should be followed during all site activities. Health and safety meetings should be held each day prior to the commencement of activities.

Before soil sampling commences, appropriate entities (e.g. DigSafe, local public works departments, company facilities) must be contacted to assure the anticipated soil sampling locations are marked for utilities, including electrical, telecommunications, water, sewer, and gas.

3.0 Interferences

Low recovery of soil from sampling equipment will prevent an adequate representation of the soil profile and sufficient amount of soil sample. If low recovery is a problem, the hole may be offset and re-advanced, terminated, or continued using a larger diameter sampler.

Asphalt in soil samples can cause false positive results for hydrocarbons. To ensure samples are free of asphalt, do not collect sample from soil with possible asphalt. Note the sampling depth(s) and the depths at with the presence of asphalt are suspected.

Instrumentation interferences addressed in POPs for Calibration of the PID, Headspace Screening for Total Volatile Organics, and Equipment Decontamination Procedures must also be considered.

Cross contamination from sampling equipment will be prevented by using sampling equipment constructed of stainless steel that is adequately decontaminated between samples.

4.0 Equipment and materials

The depth at which samples will be collected and the anticipated method of sample collection (direct-push, split-spoon, hand auger, shovel, or test pits) will be presented in the Work Plan. The following details equipment typically needed for soil sampling, based on the various methods. See the Work Plan for specific detail of equipment and supply needs.

Depending on the nature of suspected contamination, field screening instrumentation may be used for direct sampling. Appropriate instrumentation and calibration standards should be available. If volatile organic contaminants are suspected and a PID will be used, refer to the equipment and instrumentation listed in the POP 004 Operation and Calibration of a Photoionization Detector. Equipment in this POP includes but is not limited to:

- PID/FID
- Calibration gas
- Tedlar® gas bags (for calibration)

If field screening methods include jar headspace screening for volatile organics, refer to the equipment and procedure in the POP No. 007 Headspace Screening for Total VOCs. Equipment in this POP includes but is not limited to:

- Clean soil ("drillers jars") jars
- Aluminum foil

Appropriate decontamination procedures must be followed for sampling equipment. Refer to POP No. 009 Decontamination of Field Equipment. Equipment in this POP includes but is not limited to:

- Phosphate-free detergent
- Isopropyl Alcohol
- Tap water
- Deionized Ultra-Filtered (DIUF) Water
- Plastic buckets or washbasins
- Brushes
- Polyethylene sheeting

The following general equipment is needed for all soil sampling, regardless of method:

- Stainless steel bowls
- Stainless steel trowels
- Appropriate sample containers for laboratory analysis
- CGI (as necessary – i.e. sites where explosive gasses may be encountered)
- Personal Protective Equipment (PPE)
- Log Book
- Cooler and ice for preservation
- Stakes and flagging to document sampling location

The following additional equipment is needed for volatile organic sampling:

- Electronic pan scale and weights for calibration
- Syringes or other discrete soil core samplers

The following additional equipment may be needed for surface and test pit soil sampling:

- Hand Auger

The following additional equipment may be needed for soil sampling from split-spoon equipment:

- Tape measure or folding carpenter's rule for recording the length of soil recovered in the split-spoon.

All subsurface drilling equipment will be provided and maintained by the subcontractor.

5.0 Procedures

5.1 General Soil Sampling Procedure for All Soil Sampling Methods

1. Record the weather conditions and other relevant on-site conditions.
2. Select the soil sampling location, clear vegetation if necessary, and record the sampling location identification number and pertinent location details.
3. Verify that the sampling equipment is properly decontaminated, in working order, and situated at the intended sampling location.
4. Place polyethylene sheeting on the ground and assemble all necessary sampling equipment on top of it. Cover surfaces onto which soils or soil samplers will be placed (i.e. tables with polyethylene sheeting).
5. Follow the appropriate procedures listed below for either surface, split-spoon, direct push, or test pit sample collection (5.2, 5.3, 5.4, and 5.5 respectively).
6. Collect soil samples according to procedures listed in Section 5.6 depending on project specific analyses.
7. Record date/time, sample ID, and sample descriptions in the field logbook for field form. A sketch or description of the location should also be recorded so the sample location can be re-constructed.
8. Immediately label (and tag if required) the sample containers and place them on ice, if required for preservation. Complete the CoC form(s) as soon as possible.
9. Dispose of all excess excavated soil in accordance with the site-specific Work Plan. Soils may either be segregated based on level of contamination, stockpiled, drummed for disposal, or put back into the hole from which the soil came.
10. Upon completion, clearly label a wooden stake or pin flag with indelible ink and stake or flag the sampling location.
11. Decontaminate the sampling equipment according to POP No. 009 Decontamination of Field Equipment.

5.2 Surface Sampling

The following procedures are to be used to collect surface soil samples. Surface soils are considered to be soils that are up to two (2) feet below ground surface, though state regulations and project objectives may define surface soils differently; therefore, the Work Plan should be consulted for direction on the depth from which to collect the surface soil samples. Sampling and other pertinent data and information will be recorded in the field logbook and/or on field forms. Photographs will be taken as needed or as specified in the Quality Assurance Project Plan (QAPP).

1. Gently scrape any vegetative covering until soil is exposed. Completely remove any pavement.
2. Remove soil from excavation with a trowel, hand auger, or shovel. Put soils within the sampling interval in a stainless steel bowl for homogenizing. Monitor the excavation as required in the site-specific HASP and/or QAPP (i.e., PID).

The criteria used for selecting surface soil locations for sampling may include the following:

- Visual observations (soil staining, fill materials)
- Other relevant soil characteristics
- Site features
- Screening results
- Predetermined sampling approach (i.e. grid or random)
- Sampling objectives as provided in the Work Plan and/or QAPP

3. For VOC analyses, collect representative soil samples directly from the recently-exposed sidewall of the excavation using a syringe or other soil coring device (e.g,, TerraCore®, EnCore®). Follow procedures in Section 5.6.1 for VOC sampling.
4. Collect sufficient soil to fill all remaining sample jars into a stainless steel bowl. Homogenize the soil samples to obtain a uniform soil composition which is representative of the total soil sample collected according to the following procedure:
   a) Remove all rocks and non-soil objects using a stainless steel spoon or scoop.
   b) Form a cone shaped mound with the sample material, then flatten the cone and split the sample into quarters.
   c) Use the stainless steel spoon/scoop to mix the quarter samples that are opposite.
   d) After mixing the opposite quarters, reform the cone shaped mound.
   e) Repeat this procedure a minimum of five (5) times, removing any non-soil objects and breaking apart any clumps.

5.3 Split-Spoon Sampling

1. At each boring location, the frequency and depth of split-spoon samples will be determined from the Work Plan. Split-spoon samples may be collected continuously, intermittently, or from predetermined depths.
2. Standard penetration tests will be conducted according to ASTM D1586-99, Standard Test Method for Penetration Test and Split-Barrel Sampling of Soils to record the number of hammer blows required to advance the sampler each 6 inches of depth in the boring log.

3. Split-spoon samplers shall be driven into undisturbed soil by driving the spoon ahead of the drill augers/casing. In cohesive soils, or soils where the borehole remains open (does not collapse), two split-spoon samples may be taken prior to advancing the augers/casing.
4. After split-spoons are retrieved, open the split-spoon and measure the recovery of soil. If a PID will be used for screening, immediately scan the recovered sample for VOCs using a PID/FID. Scan the recovered soil by making a hole in the soil and placing the PID in or very close to the hole. Be very careful not to get soil on the tip of the PID. Take these PID scan readings every 6 inches along the split-spoon. Note any staining and/or presence of water. Record the highest PID reading and the depth at which it was observed along with other observations. If required in the Work Plan, VOC and headspace samples should be collected (see Section 5.6.1) prior to logging the sample.
5. If headspace screening for VOCs is required in the Work Plan, collect a soil sample (as defined in the Work Plan) and perform headspace screening according to POP No. 007 Headspace Screening for Total VOCs.
6. Soils collected using the split-spoon sampler will be logged by the AECOM field representative using the procedure described in ASTM D2488-00 Standard Practice for Description and Identification of Soils. In addition to the description of the soils, blow counts, sample recovery, PID readings (headspace), and the depth to water will also be recorded.
7. Collect the remainder of the sample volume required into a stainless steel bowl. Homogenize the soil so the material is uniform in composition and representative of the total soil sample collected. Follow homogenizing techniques as described in Section 5.2.
8. The Work Plan may specify that intervals to be sent to the laboratory be determined by visual observation and/or highest PID screening or headspace results, which can only be determined once the boring is complete. In this instance, a VOC sample should be collected at each interval. The remainder of the soil from that interval will be set aside in a clearly labeled stainless steel bowl covered with aluminum foil. Once the boring has been completed and the sample interval has been determined, the remainder of the soil can be homogenized according to Section 5.2 and submitted for laboratory analysis.
9. Once a boring is complete and all required samples have been collected, the boring may be filled or a monitoring well or piezometer may be installed. Borings must be completed as specified in the Work Plan.

5.4 Direct Push Sampling

At each boring location, the frequency of direct-push samples will be determined from the Work Plan. Typically, samples with direct-push equipment are collected in 4 ft intervals.

1. Sample using either 2' or 4' Macro-Core samplers with acetate liners to obtain discrete soil samples at specific depths.

2. Cut open the acetate liner, and immediately scan the recovered sampler for VOCs using a PID/FID. Note any staining and/or presence of water. Record the highest PID reading and the depth at which it was observed along with other observations. VOC and headspace samples, if required in the Work Plan should be collected (see Section 5.6.1) prior to logging the sample.
3. If required in the Work Plan, collect a soil sample (as defined in the Work Plan) and perform headspace screening according to POP No. 007 Headspace Screening for Total VOCs.
4. Soils collected using the direct-push sampler will be logged by the AECOM field representative using the procedure described in ASTM D2488-00 Standard Practice for Description and Identification of Soils. In addition to the description of the soils and sample recovery, PID readings (headspace), and the depth to water will also be recorded.
5. Collect the remainder of the sample into a stainless steel bowl. Homogenize the soil collected so that the material is uniform in composition and representative of the total soil sample collected. Follow homogenizing techniques as described in Section 5.2.
6. Once a boring is complete and all required samples have been collected, the boring may be filled or a monitoring well or piezometer may be installed. Borings must be completed as specified in the Work Plan.

5.5 Test Pit Sampling

1. Excavate the test pit to the desired depth.
2. Using the excavator bucket, collect soil samples as specified in the Work Plan. Collect a sample and perform screening analyses as required by the Work Plan. If VOCs contamination is suspected, perform headspace screening according to POP No. 007 Headspace Screening for Total VOCs.
3. Collect the sample from center of the bucket to avoid potential contamination from the bucket.
4. VOC samples should also be collected from an undisturbed section soil in the excavator bucket. The top layer of exposed soil should be scraped away just prior to collecting the VOC samples.
5. Collect the remainder of the sample volume required into a stainless steel bowl. Homogenize the soil so the material is uniform in composition and representative of the total soil sample collected. Follow homogenizing techniques as described in Section 5.2.
6. Dispose of all excavated soil according to the Work Plan.

5.6 Sample Collection Methods

5.6.1 Volatile Organics Sampling

For soils collected for analyses of volatile organics, including Volatile Petroleum Hydrocarbons (VPH) or other purgable compounds, a closed system is maintained. From collection through analysis, the sample bottles are not opened. The bottle kit for a routine field sample for these analyses will typically include three 40-mL VOA vials and one soil jar. Two 40-mL VOA vials will contain either 5 mL reagent water or 5 mL sodium bisulfate and magnetic stir bars (i.e., low level vials). The third VOA vial will contain 15 mL methanol with no magnetic stir bar (i.e., high level vial). These vials are usually provided by the laboratory and are pre-weighed. No sample labels are affixed to the VOA vials, as addition of a label would alter the vial weight. All information is recorded directly on the VOA vial using indelible marker. The soil jar is provided for percent solids determination. For VOC or VPH analyses, samples are collected prior to sample homogenization. Collect the VOC sample in accordance with the procedure described below.

1. Prior to sampling, weigh the 40-mL VOA vials received from the laboratory or purchased by AECOM. Record this weight. This weight will be used to determine if the proper amount of soil has been added to the vial.
2. Determine the soil volume necessary for the required sample weight, typically 5 grams:
   a) Prepare a 5 mL sampling corer (e.g., Terra Core®) or cut-off plastic syringe.
   b) Tare the sampler by placing it on the scale, and zeroing the scale.
   c) Draw back the plunger to the 5 gram mark or 5mL (5cc) mark on cut-off syringe, and insert the open end of the sampler into an undisturbed area of soil with a twisting motion, filling the sampler with soil. Note the location of the plunger with respect to the milliliter (cc) or other graduation printed on the sampler.
   d) Weigh the filled sampler, and remove or add soil until the desired weight is obtained. Note the location of the plunger which corresponds to this weight. Do not use this sample for laboratory analysis.
3. Once the required soil volume has been determined, pull the plunger back to this mark and hold it there while filling the syringe for each sample.
4. Collect 5 grams of soil using the cut-off syringe or Terra Core® sample device. Extrude the 5-grams of soil into one of the low level 40-mL VOA vials. Quickly wipe any soil from the threads of the VOA vial with a clean Kimwipe® and immediately close the vial. It is imperative that the threads be free from soil or other debris prior to replacing the cap on the vial in order to maintain the closed system necessary for the analysis.
5. Gently swirl the vial so that all of the soil is fully wedded with the preservative.
6. Weigh the 40 mL vial with the sample contained. Sample weight should be within 0.5 grams (±10%) of the target weight. Record the sample weight.

7. Fill the other low level 40 mL VOA vial in this manner,
8. Repeat the process for the high level VOA vials, only for the high level VOA vial three 5 gram aliquots (i.e., 15 grams total) should be extruded into the high level VOA vial.

NOTE: Depending on the laboratory, some high level VOA vials only contain 5 mL or 10 mL of methanol. If this is the case, either 5 grams total or 10 grams total, respectively, should be extruded into the high level VOA vial. In other words, the mass of soil in grams should be identical to the volume of methanol in mL (i.e., 1:1 ratio of soil to methanol).

9. Collect any additional QC sample collected (e.g., field duplicate, MS, and MSD) in the same manner as above.
10. Fill the 4-oz glass jar with soil from the same area for percent moisture determination.

5.6.2 Soil Sampling Method (All other analyses except VOC/VPH)

When all the required soil for a sampling location has been obtained, the soil can be homogenized as described in section 5.2. Collect sufficient volume to fill all of the remaining sample containers at least ¾ full for all other analyses. Homogenize the soil in a decontaminated stainless steel bowl, removing rocks, sticks, or other non-soil objects and breaking apart any lumps of soil prior to filling the remaining sample containers.

NOTE: Soil samples must contain greater than 30% solids for the data to be considered valid.

6.0 Quality assurance / quality control

Sampling personnel should follow specific quality assurance guidelines as outlined in the QAPP. Proper quality assurance requirements should be provided which will allow for collection of representative samples from representative sampling points. Quality assurance requirements outlined in the QAPP typically suggest the collection of a sufficient quantity of field duplicate, field blank, and other samples.

Quality control requirements are dependent on project-specific sampling objectives. The QAPP will provide requirements for equipment decontamination (frequency and materials), sample preservation and holding times, sample container types, sample packaging and shipment, as well as requirements for the collection of various quality assurance samples such as trip blanks, field blanks, equipment blanks, and field duplicate samples.

7.0 Data and records management

All data and information (e.g., sample collection method used) must be documented on field data sheets, boring logs, or within site log books with permanent ink. Data recorded will include the following:

- weather conditions
- arrival and departure time of persons on site
- instrument type, lamp (PID), make, model and serial number
- calibration gas used
- date, time and results of instrument calibration and calibration checks
- sampling date and time
- sampling location
- samples collected
- sampling depth and soil type
- deviations from the procedure as written
- readings obtained

8.0 Personnel qualifications and training

All field staff are required to be OSHA 40-Hour Health and Safety certified with a current annual 8-hour refresher prior to engaging in any field collection activities.

Prior to implementation of these soil sampling procedures, the field sampler will be instructed by a person experienced with these procedures. The field staff will demonstrate to the field team leader the proper set-up, calibration, operation, and routine maintenance of the instrumentation and hand-held equipment, as well as the proper procedures, used to collect soil samples.

9.0 References

POP 004 Operation and Calibration of a Photoionization Detector

POP 007 Headspace Screening for Total VOCs

POP 009 Decontamination of Field Equipment

ASTM D1586-99, Standard Test Method for Penetration Test and Split-Barrel Sampling of Soils

ASTM D2488-00 Standard Practice for Description and Identification of Soils

10.0 Revision History

Revision	Date	Changes
0	June 2010	Original POP

Attachment 1. Example Boring Log

AECOM			Client:						Boring ID:	
			Project Number:							
			Site Location:							
			Coordinates:			Elevation:			Sheet: 1 of 1	
			Drilling Method:						Monitoring Well Installed:	
			Sample Type(s):			Boring Diameter:			Screened Interval:	
Weather:				Logged By:		Date/Time Started:			Depth of Boring:	
Drilling Contractor:				Ground Elevation:		Date/Time Finished:			Water Level:	
Depth (ft)	Geologic sample ID	Sample Depth (ft)	Blows per 6"	Recovery (inches)	Headspace (ppm)	U.S.C.S	MATERIALS: Color, size, range, MAIN COMPONENT, minor component(s), moisture content, structure, angularity, maximum grain size, odor, and Geologic Unit (If Known)		Lab Sample ID	Lab Sample Depth (Ft.)
1										
2										
3										
4										
5										
6										
7										
8										
9										
10										
11										
12										
13										
14										
15										
16										
17										
18										
19										
20										

NOTES:	Date	Time	Depth to groundwater while drilling
Checked by _____ Date: _____			

AECOM

Project Operating Procedure

Headspace Screening for Total VOCs

Procedure Number: 007

Revision No.: 0

Revision Date: June 2010

Robert Shoemaker, POP Author

Date: June 2010

Joanne Lynch, Project Manager

Date: April 2012

Annual review of this POP has been performed and the POP still reflects current practice.

Initials: _____ Date: _____

Initials: _____ Date: _____

J:\Indl_Service\Project Files\BASF-0760\Cranston RI\7_Deliverables\12. Supplemental RI\AD\Appendix A\BASF POP 007 Headspace Screening for Total VOCs.doc

Contents

1.0 Project Scope and applicability 1

2.0 Health and safety considerations 1

3.0 Interferences 2

4.0 Equipment and materials 2

5.0 Procedures 2

6.0 Quality assurance / quality control 4

7.0 Data and records management 5

8.0 Personnel qualifications and training 5

9.0 References 6

10.0 Revision History 6

1.0 Project Scope and applicability

POP 007 describes the basic techniques for using headspace analysis to screen for volatile organics in contaminated soils using a portable Photo Ionization Detector (PID) or Flame Ionization Detector (FID).

Specific project requirements as described in an approved Work Plan, Sampling Plan, Quality Assurance Project Plan, Job Hazard Analysis (JHA), Safety Task Analysis Review (STAR), or Site-Specific Health and Safety Plan (HASP) will take precedence over the procedures described in this document.

2.0 Health and safety considerations

This section presents the generic hazards associated with headspace screening and is intended to provide general guidance in preparing site-specific health and safety documents. The Site-Specific HASP, JHAs, and STARs will address additional requirements and will take precedence over this document. Note that headspace screening usually requires Level D personal protection unless there is a potential for airborne exposure to site contaminants. Under circumstances where potential airborne exposure is possible respiratory protective equipment may be required based on personal air monitoring results. Upgrades to Level C will be coordinated with your Site Safety and Health Officer (SSHO) or Environment, Health, and Safety (EHS) Coordinator.

Health and safety hazards and corresponding precautions include, but are not limited to, the following:

Dermal contact with contaminated soil. Personnel should treat all soil as potentially contaminated and wear chemically impervious gloves. Minimize skin contact with soil by using sampling instruments such as stainless steel spades or spoons. Do not touch any exposed skin with contaminated gloves.

Inhalation hazards. Appropriate air monitoring should be conducted to ensure that organic vapor concentrations in the breathing zone do not exceed action levels as specified in the Site-Specific HASP. When ambient temperatures are low enough to require warming samples using the vehicle heater, the vehicle's windows should be opened enough to prevent the build-up of any organic vapors. Use the PID or FID to verify the airborne concentrations in the vehicle remain below applicable action levels. Note that many volatile organic compounds (VOCs) are flammable and all precautions must be observed to eliminate any potential ignition sources.

Shipping limitations. Follow applicable regulations when shipping FID/PID equipment. When shipping an FID by air, the hydrogen tank must be bled dry. Calibration gas canisters are considered dangerous goods and must be shipped according to IATA and DOT regulations. Consult your EHS Coordinator and check with your shipping company to determine the correct shipping procedures.

3.0 Interferences

Regardless of which gas is used for calibration, the instrument will respond to all analytes present in the sample that can be detected by the type of lamp used in the PID.

Moisture will generate a positive interference in the concentration measured for a PID and is characterized by a slow increase in the reading as the measurement is made. Care must be taken to minimize uptake of moisture to the extent possible. Refer to the manufacturers' instructions for care, cleaning, and maintenance.

Uptake of soil into the PID must be avoided as it will compromise instrument performance by blocking the probe, causing a positive interference, or dirtying the PID lamp. Refer to the manufacturers' instructions for care, cleaning, and maintenance.

The user should listen to the pitch of the sampling pump. Any changes in pitch may indicate a blockage and corrective action should be initiated.

4.0 Equipment and materials

The following materials must be on hand in good operating condition and/or in sufficient quantity to ensure that proper field analysis procedures may be followed.

- Calibrated PID/FID instrument
- Top-sealing "Zip-Loc" type plastic bags – or – 16 ounces of soil or "mason-" type glass jars and aluminum foil
- Project field book and/or boring logs
- PPE as specified in the Site-Specific HASP
- Material Safety Data Sheets (MSDSs) for any chemicals or site-specific contaminants
- A copy of the Site-Specific HASP

5.0 Procedures

5.1 Preparation

Review available project information to determine the types of organic vapors that will likely be encountered to select the right instrument. The two basic types of instruments are FIDs and PIDs.

FIDs work well with organic compounds that have relatively lightweight molecules, but may have problems detecting halogenated compounds or heavier organic compounds; FIDs can detect methane

for example. Since the FID uses a flame to measure organic compounds, ensure that work is conducted in an atmosphere, which is free of combustible vapors. If ambient temperatures are below 40°F, the flame of the FID may be difficult to light.

When using a PID, select an instrument that can measure the ionization potential of the anticipated contaminants of concern. PIDs work well with a range of organic compounds and can detect some halogenated hydrocarbons; PIDs cannot detect methane. The correct ultraviolet (UV) light bulb must be selected according to the types of organic vapors that will likely be encountered. The energy of the UV light must equal or exceed the ionization potential of the organic molecules that the PID will measure. The NIOSH Pocket Guide to Chemical Hazards is one source for determining ionization potentials for different chemicals. Bulbs available for PIDs include 9.4 eV, 10.6 (or 10.2) eV, and 11.7 eV bulbs. The 10.6 eV bulb is most commonly used as it detects a fairly large range of organic molecules and does not burn out as easily as the 11.7 eV bulb. The 9.4 eV bulb is the most rugged, but detects only a limited range of compounds. Under very humid or very cold ambient conditions, the window covering the UV light may fog up, causing inaccurate readings. Ask your EHS coordinator about correction factors when high humidity conditions exist.

After selecting the correct instrument, calibrate the PID/FID according to POP 004 Operation and Calibration of a Photoionization Detector. Record background/ambient levels of organic vapors measured on the PID/FID after calibration and make sure to subtract the background concentration (if any) from your readings. Check the PID/FID readings against the calibration standard every 20 readings or at any time when readings are suspected to be inaccurate, and recalibrate, if necessary. Be aware that, after measuring highly contaminated soil samples, the PID/FID may give artificially high readings for a time.

5.2 Top-Sealing Plastic Bag

Place a quantity of soil in a top-sealing plastic bag and seal the bag immediately. The volume of soil to be used should be determined by the project manager or field task manager. The volume of soil may vary between projects but should be consistent for all samples collected for one project. Ideally, the bag should be at least 1/10th-filled with soil and no more than half-filled with soil. Once the bag is sealed, shake the bag to distribute the soil evenly. If the soil is hard or clumpy, use your fingers to gently work the soil (through the bag) to break up the clumps. Do not use a sampling instrument or a rock hammer since this may create small holes in the plastic bag and allow organic vapors to escape. Alternatively, the sample may be broken up before it is placed in the bag. Use a permanent marker to record the following information on the outside of the bag:

- Site identification information (i.e., borehole number)
- Depth interval
- Time the sample was collected. For example: “SS-12, 2-4 ft, @1425”

Headspace should be allowed to develop before organic vapors are measured with a PID/FID. The amount of time required for sufficient headspace development will be determined by the project-specific sampling plan and the ambient temperature. Equilibration time should be the same for all samples to allow an accurate comparison of organic vapor levels between samples. However, adjustments to equilibration times may be necessary when there are large variations in ambient

temperature from day to day. When ambient temperatures are below 32°F, headspace development should be within a heated building or vehicle. When heating samples, be sure there is adequate ventilation to prevent the build-up or organic vapors above action levels.

Following headspace development, open a small opening in the seal of the plastic bag. Insert the probe of a PID/FID and seal the bag back up around the probe as tightly as possible. Alternatively, the probe can be inserted through the bag to avoid loss of volatiles. Since PIDs and FIDs are sensitive to moisture, avoid touching the probe to the soil or any condensation that has accumulated inside of the bag. Since the PID/FID consumes organic vapors, gently agitate the soil sample during the reading to release fresh organic vapors from the sample. Erratic meter response may occur at high organic vapor concentrations or conditions of elevated headspace moisture, in which case, headspace data should be discounted. Record the highest reading on the field form or in the field notebook as described in Section 7.

5.3 Jar and Aluminum Foil (Alternate Method)

Half-fill a clean glass jar with the soil sample to be screened. Quickly cover the jar's opening with one to two sheets of clean aluminum foil and apply the screw cap to tightly seal the jar. Allow headspace development for at least ten minutes. Vigorously shake the jar for 15 seconds, both at the beginning and at the end of the headspace development period. Where ambient temperatures are below 32°F (0°C), headspace development should be within a heated area. When heating samples, be sure there is adequate ventilation to prevent the build-up of organic vapors above action levels.

Subsequent to headspace development, remove the jar lid and expose the foil seal. Quickly puncture the foil seal with the instrument sampling probe, to a point about one-half of the headspace depth. Exercise care to avoid uptake of water droplets or soil particulates. As an alternative, use a syringe to withdraw a headspace sample, and then inject the sample into the instrument probe or septum-fitted inlet. This method is acceptable contingent upon verification of methodology accuracy using a test gas standard. Following probe insertion through the foil seal or sample injection to probe, record the highest meter response on the field form or in the field notebook. Using foil seal/probe insertion method, maximum response should occur between two and five seconds. Erratic meter response may occur at high organic vapor concentrations or conditions of elevated headspace moisture, in which case, headspace data should be discounted.

6.0 Quality assurance / quality control

Quality Assurance/Quality Control (QA/QC) will include the collection of duplicate samples. In general, one duplicate will be collected per 20 samples. Organic vapor concentrations measured in the primary and duplicate samples should be similar within plus or minus 20 percent. The frequency of headspace duplicate collection will be determined by the project manager/task manager. The PID/FID instrument must be calibrated according to the manufacturer's instructions before beginning screening, and checked or recalibrated every 20 analyses or when readings are suspected to be inaccurate. Record ambient organic vapor levels in the field notebook and on the field form. Periodically check ambient organic vapor levels. If ambient levels have changed more than 20 percent, recalibrate the PID/FID. Make sure readings are not collected near a vehicle exhaust or

downwind of the drill rig exhaust. If grossly contaminated soil is encountered, decontaminate sampling instruments between samples and/or change contaminated gloves to avoid cross contaminating less contaminated samples.

7.0 Data and records management

All data generated (results and duplicate comparisons) will be recorded in the field notebook and/or on the field form. Any deviation from the outlined procedure will also be noted. Field conditions (ambient temperature, wind, etc.) should also be recorded in the field notebook.

Readings may be recorded in a field notebook, on a boring log, or on an appropriate form specific to the project. The form should include the following information:

- When the PID/FID was calibrated (date/time) and calibration standard used
- Background/ambient concentrations measured after PID/FID calibration
- Location of sample (i.e., bore-hole number)
- Depth interval of sample measured
- Lithology of material measured
- PID/FID reading and units of measure

Note that if PID/FID measurements are recorded on a boring log, it is not necessary to duplicate information in the column where the PID/FID readings are recorded (e.g., borehole number, depth interval, lithology type).

All documentation will be stored in the project files and retained following completion of the project.

8.0 Personnel qualifications and training

The project manager is responsible for ensuring that project-specific requirements are communicated to the project team and for providing the materials, resources, and guidance necessary to perform the measurements in accordance with this POP and the project plan.

The field operator is responsible for verifying that the PID is in proper operating condition prior to use and for implementing the calibration and measurement procedures in accordance with this POP and the project plan.

9.0 References

POP 004 Operation and Calibration of a Photoionization Detector

10.0 Revision History

Revision	Date	Changes
0	June 2010	Original POP

AECOM

Project Operating Procedure

Low Stress Groundwater Sampling Procedures

Procedure Number: 008

Revision No.: 01

Revision Date: September 2010

Robert Shoemaker, POP Author

Date: September 2010

Joanne Lynch, Project Manager

Date: April 2012

Annual review of this POP has been performed and the POP still reflects current practice.

Initials: _____ Date: _____

Initials: _____ Date: _____

J:\Indl_Service\Project Files\BASF-0760\Cranston RI\7_Deliverables\12. Supplemental RI\AD\Appendix A\BASF POP 008 Low Stress GW Sampling Rev1 Final.docx

Contents

1.0 Project Scope and applicability 1

2.0 Health and safety considerations 1

3.0 Interferences 1

4.0 Equipment and materials 2

5.0 Procedures 5

6.0 Quality assurance / quality control 15

7.0 Data and records management 16

8.0 Personnel qualifications and training 16

9.0 References 17

10.0 Revision History 17

List of Figures

Figure 1: Low-Flow Setup Diagram

List of Attachments

Attachment 1: Monitoring Well Sampling Worksheet

1.0 Project Scope and applicability

This procedure is for the collection of groundwater samples that are indicative of mobile organic and inorganic loads at ambient flow conditions (both the dissolved fraction and the fraction associated with the mobile particulates). The procedure emphasizes the need to minimize stress on the aquifer by using low pumping rates (below 1 liter per minute) and allowing minimal or no drawdown in order to collect samples with minimal alterations to water chemistry. The procedure also reduces the volume of purge water generated, thereby reducing disposal costs. A minimum purge volume, based on well screen length and whether the water level is below the top of the screen, is specified so that samples will be representative of the conditions of the groundwater flowing through the well screen.

The procedure is suited for monitoring wells that have a screen, or open interval, of 10 feet or less but is also applicable to wells with longer well screens. The monitoring wells must be sufficiently wide to simultaneously accept a submersible pump or intake tubing from a peristaltic pump, and the probe from an electronic water level indicator. The screened or open interval must be positioned to intercept the existing contaminant plume, and the monitoring well must be properly constructed, developed, and maintained. This procedure does not address the collection of samples from wells containing light or dense non-aqueous phase liquids (LNAPL/DNAPL).

2.0 Health and safety considerations

All calibration, maintenance and servicing of the instrumentation should be performed in a safe area, away from hazardous locations.

Refer to the Site Specific Health and Safety Plan for additional Health and Safety issues.

3.0 Interferences

Contaminants that are known to adsorb to particulates, such as metals, PCBs, etc., will be impacted by elevated turbidity (i.e., >25 NTU). If turbidity below 25 NTU cannot be achieved after redevelopment, the turbidity will be considered part of the total contaminant mobile load, and samples will not be filtered prior to analysis.

ORP is a difficult parameter to measure in the field because the length of time which is necessary for the probe to obtain an accurate measurement is too long to be conducive to use during low-stress monitoring. Consequently, ORP readings may continue to increase or decrease slowly over the purging period.

Gas bubbles present in discharge tubing during purging and sampling are a problem: Their presence indicates off-gassing from groundwater or poor purging connections in the airline or groundwater tubing. Sunlight can exacerbate this problem when low pumping rates are used. Check connections at the surface. If bubbles persist, check connections at the pump. Erect an umbrella to shade and insulate the transparent flow-through cell and tubing to prevent exposure to direct sunlight. During purging and sampling, observe the flow of groundwater in the sample tubing and keep the tubing filled with groundwater, removing all air pockets and bubbles, to the extent possible. Gas bubbles may be reduced by increasing flow, if possible, and keeping tubing and the transparent flow-through cells shaded. Monitor the flow-through cell for trapped gases which can impact the readings. Placing the flow-through cell at a 45 degree angle with the port side facing upwards can help remove air bubbles from the flow-through cell (see Figure 1).

Thermal currents in the monitoring well may cause vertical mixing of water in the well bore. When the air temperature is colder than the groundwater temperature, it can cool the top of the water column. Colder water which is denser than warm water sinks to the bottom of the well and the warmer water at the bottom of the well rises, setting up a convection cell. "During low-flow sampling, the pumped water may be a mixture of convecting water from within the well casing and aquifer water moving inward through the screen. This mixing of water during low-flow sampling can substantially increase equilibration times, can cause false stabilization of indicator parameters, can give false indication of redox state, and can provide biological data that are not representative of the aquifer conditions" (Vroblesky 2007).

Pump tubing lengths above the top of well casing should be kept as short as possible to minimize heating the groundwater in the tubing by exposure to sun light and ambient air temperatures. Heating may cause the groundwater to de-gas, which is unacceptable for the collection of samples for VOC and dissolved gases analyses.

4.0 Equipment and materials

4.1 Submersible pumps, bladder pumps, positive displacement pumps, or peristaltic pump

In selecting the appropriate pump, the sampler must consider the head pressure the pump must overcome (the distance between the water level and the highest point over which the purge water must be raised), the depth to the desired sampling interval, the inner diameter of the inner well casing, the analyses to be performed, and the associated logistics (power source, well accessibility). The pump selected must have sufficient lift capacity for the head pressure anticipated. Peristaltic pumps are effective up to a depth to water of approximately 27 feet (note that this must be measured from the highest point that the water must be raised, such as the top of the outer casing). The pump must be sufficiently small to fit into the well along with the water level indicator. The associated pressure lines, power lines, and purge and intake lines must be sufficiently long to reach to the intended sampling interval. As per EPA guidance, peristaltic pumps or other pumps that use suction shall be avoided for sampling volatile compounds, gases (methane, ethane, ethene), and other parameters that may be impacted by degassing and pH modification. For these analyses, peristaltic pumps must not be used when project decisions hinge on detection of low concentrations of VOCs.

4.2 Bladder Pump

The bladder pump system contains the following components: a pressurized cylinder of inert gas (typically nitrogen), a pump controller, air intake and discharge lines, and bladder pumps. Dedicated bladder pumps installed at some sites, may also have an extension designed to lower the pump intake below the level of the pump. The controller regulates total flow of nitrogen from the pressurized nitrogen cylinder to the pump assembly located in the well. AECOM typically samples one well per nitrogen cylinder. Note that if the bladder pumps are placed at the same depth in each well, multiple wells may be sampled simultaneously with one nitrogen cylinder or air compressor. In this case, a three-way cross splitter with quick-connect air line fittings is attached to the tubing connected to the nitrogen cylinder. Up to three controllers can then be connected to the nitrogen cylinder. If nitrogen cylinders are not available, air compressors may be used to power the bladder pumps.

The tubing bundle connected to the pump has three components: an air line with fittings to the pump and the controller, a sample line, and a Teflon-coated support cable. The sample line, through which the purge water is removed, should be composed entirely of Teflon. In locations where dedicated bladder pumps are installed, the tubing bundle and support cable may be connected to a well plate recessed below the locking cap.

4.3 Peristaltic Pump

Peristaltic pumps are not submerged in the well, but remain outside of the well and function by pulling water to the surface. Use is therefore not approved by EPA Region I for low levels of volatile organic compounds, gases, or other analyses that may be impacted by changes in pressure or pH. A peristaltic pump has a rotating pump head with stepless variable speed that compresses a short stretch of flexible (Pharmed) silicone tubing to pull water up from the well using mechanical peristalsis. The sample water does not come into direct contact with the pump. Teflon tubing is connected to either end of the silicone tubing. The pumps typically used by AECOM, the GeoPump or GeoPump II by GeoTech, operate off an external 12 V battery or 120 V AC power source. Commercially available “JumpStart” 12 volt batteries are typically preferred since electrical hookup is typically not available; since they are safe, easy to carry, and easy to recharge; and since the potential contamination issues associated with use of a generator are avoided.

4.4 Submersible Pump

Submersible pumps used are typically electrical centrifugal pumps. A centrifugal submersible pump consists of impellers or vanes that are spun or rotated by a sealed electric motor. The spinning of the impellers that causes water to be accelerated outward and then upward into the pump's discharge line. The higher the pumping rate, the greater the potential for sample alteration by sample agitation, increased turbulence and pressure changes in the sample. However, maintaining flow in the low-flow range (less than 1,000 mL per minute) is considered acceptable. A centrifugal submersible pump is usually suspended in a monitoring well by a support cable. Electrical submersible pumps typically used by AECOM are the Grundfos Redi-Flo 2, or similar. These are centrifugal pumps constructed of stainless steel and Teflon, and the motors are cooled and lubricated with water rather than with hydrocarbon-based coolants and lubricants that could contaminate groundwater samples. The pumps can achieve flow rates as low as 100 mL per minute. The pumps require a 115 or 230 volt electrical

supply, therefore a generator is typically required. Pumps are available for wells 2" in diameter or larger.

4.5 Tubing suited to the pumps and flow-through cells to be used

Teflon or Teflon-lined polyethylene tubing are preferred for all parameters. Stainless steel tubing may be used for sampling organics, but is not recommended for inorganics. PVC, polypropylene or polyethylene may be used for sampling inorganics. Pharmaceutical-grade (e.g. Pharmed) silicon tubing shall be used around the rotor head of the peristaltic pump, and if necessary as a connecting tubing to the flow-through cells. Inner tubing diameter should be kept to the smallest size possible to reduce the generation of air pockets during low flow. Tubing typically used with the peristaltic pumps is Teflon of 1/4-inch outside diameter, and 3/16-inch outside diameter.

4.6 Electronic water level indicator: Solinst Model 101 or similar

Inner casing diameter and pump diameter should be considered in selecting a water level indicator that will fit into the well with the pump. A smaller diameter probe may be required for smaller wells.

4.7 High-Density Polyethylene (HDPE) Y connectors and tubing clamps

These allow for removal of an aliquot of purge water prior to the flow-through cell for turbidity analysis.

4.8 Flow controllers and compressed inert gases for submersible bladder pumps

QED Model MP-10 Flow controller and nitrogen gas are typically used unless nitrogen is an analyte of interest. Portable air compressors may be used in place of compressed gas (e.g., QED Well Wizard).

4.9 Power source

Marine battery, battery pack, compressed gas and flow-controller, or generator and heavy duty extension cords depending on pump

4.9.1 Bladder Pumps

For bladder pump operation, the cylinders of inert compressed gas or portable air compressors function with the flow controller as the power source, although the flow controller does require batteries.

4.9.2 Peristaltic Pumps

The peristaltic pumps typically used by AECOM require an external 12 volt battery or 120 volt AC power source. Commercially available 12 volt batteries designed for jump-starting a car battery (“JumpStart” or similar) are preferred since electrical hookup is typically not available; since they are safe, easy to carry, and easily rechargeable; and since the potential contamination issues associated with use of a generator are avoided.

4.9.3 Submersible Pumps

An external power source is required. If use of a generator is required, precautions must be taken to avoid cross-contamination when handling fuel and when locating

the generator to prevent contamination of the samples and sampling equipment by fumes and exhaust.

4.10 Water Quality Meter with Transparent Flow-Through Cell

YSI 6820 Water Quality Meter and transparent Flow-through cell with 610DM data manager, or similar model

4.11 Turbidity Meter

LaMotte 2020 turbidity meter, or similar model

4.12 Other Equipment

- Photoionization Detector (PID)
- Tarp, umbrellas, or other means to shade the tubing, flow-through cells, and water quality meters from direct sunlight
- Graduated cylinders
- Watch with seconds hand
- Graduated plastic purge buckets or carboys
- Well information consisting of well casing diameter, depth to bottom, depth to top and bottom of screened interval, desired depth for sample collection, depth of pump intake (if dedicated pumps are in place) and results of synoptic water level measurements and LNAPL/DNAPL survey.

5.0 Procedures

This section includes the procedures for performing field activities that should be conducted prior to sampling, procedures for purging the wells using the different pumps, and the sampling and post-sampling procedures (which are the same for the different pump types).

5.1 Pre-Sampling Field Activities

Prior to beginning sampling activities in any wells, all synoptic water level measurements and well soundings should be completed in accordance with POP 005 Water Level Measurements.

Wells should be inspected for the presence of DNAPL or LNAPL. Wells with NAPL cannot be sampled using low-flow techniques, and must be sampled with an alternative sampling method, such as bailing.

All non-dedicated down-well measuring devices will be thoroughly decontaminated before sampling and between monitoring locations.

Sampling should begin at the monitoring well likely to have the lowest levels of contamination, generally upgradient or farthest from the site or suspected source, and proceed such that the most contaminated wells are sampled last.

Record the monitoring location identification number. Check the monitoring location for damage or evidence of tampering, and record observations.

Place polyethylene sheeting on the ground and assemble all necessary sampling equipment on top of it. This helps to prevent contamination of the sampling equipment by the soil, reduces wear on the sampling equipment due to dirt, and reduces the likelihood that contaminated purge water will spill into the surface soil.

Unlock the protective outer casing (if present) and remove the outer well cap.

Remove the inner well cap, and measure the well headspace and breathing zone for total organic vapors. If it is windy, stand upwind of the well to conduct measurements. For well headspace, place the intake of the PID approximately two inches below the plane formed by the top of the inner casing. Measure the total volatile organic concentrations in the breathing zone. Record both readings. Use the breathing zone concentrations to determine appropriate health and safety measures in accordance with the site-specific health and safety plan.

5.2 Purging the Wells

The procedure for sampling with bladder pumps is as follows:

Connect all the lines to the pump. If a dedicated bladder pump is in place, the tubing will already be connected to the pump and is likely connected to the well plate.

Carefully lower the pump to the desired sampling depth using the suspension cable. Take care to minimize disturbance and contact with the well walls which could knock rust or other deposits into the standing water. Secure the pump using the suspension cable.

Connect the pump power cable to the power source. Bladder pumps are driven by compressed gas or air through a controller. The controller typically requires batteries. Connect the regulator, pressurized inert gas cylinder or air compressor, flow controller, and pump. If using compressed gas, use a crescent wrench to attach the regulator to the pressurized nitrogen cylinder. Connect the air line from the regulator to the intake valve of the flow controller. Connect the air line from the outflow valve of the flow controller to the airline to the dedicated bladder pump.

Carefully install a flow-through cell on the sonde. Avoid touching the oxygen probe. Connect a purge water discharge line to the flow-through cell of the water quality meter.

Connect the purge water discharge line from the well to the water quality meter using a HDPE Y connector and pinch valve so that an aliquot of purge water can be obtained before the flow-through cell for turbidity measurements. Connect the discharge tubing from the well to the HDPE Y connector fitting using a short piece of Pharmed silicone tubing. Attach a piece of Pharmed silicone tubing to one

end of the fitting and close it with a pinch value or check valve unit. Samples for turbidity measurements will be collected by opening this pinch valve. Connect the other end of the Y connector fitting to the lower of the two openings in the flow-through cell using silicon tubing and short pieces of Teflon tubing. Connect a piece of Teflon tubing to the out flow of the flow-through cell to the purge bucket. Use a short piece of silicon tubing at the cell. Be sure to use a piece of Teflon tubing sufficiently long to allow purge water to flow easily into the purge bucket.

Mount the sonde and flow-through cell assembly at a 45 degree angle to allow air bubbles to escape from the cell, and position the sonde such that any groundwater spills will be directed away from the sample.

Slowly open the valve on the regulator attached to the nitrogen cylinder until the pressure gauge reads approximately 60 pounds per square inch (PSI). Adjust the regulator on the flow controller to approximately 10 - 20 PSI.

Re-measure the static water level.

Determine the minimum purge volume required for the well. Samples should only be collected after the required volume has been removed from the well. For screen lengths of ten feet or less, a minimum volume of one saturated screen length plus drawdown volume must be removed. For screen lengths greater than ten feet, a minimum purge volume of three saturated screen lengths plus drawdown volume must be removed.

If the depth to water is less than the depth to the top of the screen, the screen is fully saturated and the minimum purge volume is one saturated screen length plus drawdown volume for screens of ten feet of less or three saturated screen lengths plus drawdown volume for screens greater than ten feet.

If the depth to water is greater than the depth to the top of the screen, calculate the well volume. Subtract the difference between the depth to water and the depth to the top of the screen from the well screen length to obtain the saturated well screen length. Round the saturated well screen length up to the nearest foot, and calculate the well volume using the volume per foot of screen length. Multiply the saturated well screen volume by three if the well screen length is greater than 10 feet.

Record the saturated well screen length and the saturated well screen volume on the sampling worksheet.

Start the flow controller and begin purging at the slowest rate possible.

- Note the purge start time.
- Collect all purge water in a bucket or carboy.
- Slowly increase the pressure at the controlled until discharge begins. The bladder pump controller should be set to allow for adequate recharge such that a maximum flow rate with no drawdown is achieved (generally 100-1,000 mL/min) and a smooth, even discharge flow is achieved. Refer to the historical flow controller settings for the well to select the starting controller pressure and intake and discharge intervals.

- Measure the flow rate using a graduated cylinder and time piece and monitor the water level and pumping rate.

Once drawdown has stopped and an acceptable flow rate established, begin monitoring indicator parameters and continue monitoring flow rate and water level.

- Record reading every three to five minutes, or as appropriate for the flow rate and flow-through cell volume. Use the water quality meter to monitor the following: temperature, pH, specific conductance, DO, and ORP. Use a turbidity meter to monitor turbidity.
- In the event that the well has extremely low recharge such that the lowest purge rate possible (100 mL/min or more, if equipment cannot effectively purge that slowly) continues to dewater the well, do not allow a water level that was above the top of the screen to drop below it, do not allow a water level already below the top of the screen to drop further, do not allow the water level to drop below the pump intake, and do not pump the well dry under any circumstances. Notify the field team leader of the situation. If all efforts to avoid dewatering the well have failed, a decision may be made to allow the well to recharge to a level sufficient to allow for collection of the necessary sample volume and to sample the well immediately. Record detailed notes concerning the sampling of the well.
- Stop purging when all parameters have stabilized. Parameters are considered to have stabilized if, over three consecutive readings, the following criteria are met:
    - pH ± 0.1 unit
    - specific conductance and temperature ± 3%
    - turbidity ± 10% or < 5 NTU
    - DO ± 10% (down to a detection limit of 0.5 mg/L)
    - ORP ± 10 mV
- The reporting limits presented are the lowest concentrations to which the instrument is considered linear and therefore accurate. Three consecutive readings below the reporting limits presented are considered to be stable.
- Readings should be recorded approximately every 5 minutes for flows in the range of 200 to 500 ml/min. Readings should be taken less frequently if the maximum flow rate is less than 100 ml/min because of the retention time in the flow-through cell. Each reading should represent a fresh aliquot of groundwater in the flow-through cell.
- Record the time at which the required minimum volume was removed, and record the total volume removed prior to sampling.
- If parameters do not stabilize, or turbidity remains greater than 5 NTU, or the minimum volume cannot be removed prior to the maximum purging time, contact the field team leader. Technical judgment will be used to ascertain when sampling should be commenced.

5.3 Sampling with Peristaltic Pumps

The procedure for sampling with peristaltic pumps is as follows:

Determine the depth at which the samples will be collected by referring to the Work Plan. Samples are frequently collected from the most-contaminated interval, as determined by previous profiling investigations, or from the lower part of the screened interval, or the midpoint of the saturated screened interval. If possible, keep the pump intake at least two feet above the bottom of the well to minimize mobilization of sediment that may be present at the bottom of the well.

Connect the necessary tubing to the pump, using a Y connector fitting and pinch valve to split the flow prior to the flow-through cell in order to collect an aliquot for turbidity:

- Measure a new section of pharmaceutical-grade, 3/16-inch inner diameter (ID) silicon tubing and attach it to the peristaltic pump head.
- Note that the length of silicon tubing in contact with the sample should be kept to a minimum.
- Measure a new section of 3/16-inch ID Teflon tubing to extend from the depth of the intended sampling location to the intake end of silicon tubing. To do this and avoid contamination of the tubing, it is recommended that a decontaminated water level measurement tape be used to measure the tubing as it is lowered into the well. The water level indicator may be lowered into the well with the tubing, or allowed to run onto the clean plastic on the ground outside of the well. Since the tubing is typically stored on a roll, straightening the tubing as you put it into the well will help avoid catching the tubing on any obstructions in the well, such as the top of the well screen. Once the tubing is lowered to the desired depth, immediately secure the free end of the Teflon tubing to prevent it dropping into the well. Using a piece of silicon tubing, connect the outflow end of the Teflon tubing to the HDPE Y-connector. Then, using several pieces of Teflon tubing, connect the pinch valve and check valve units to one end of the Y-connector (through which samples for turbidity will be collected) and connect the other end of the Y-connector to the intake of the flow-through cell.

Connect the electrical clamps from the pump to the appropriate terminals on the 12 volt battery.

Note that reversing the connections will typically cause the pump to run in reverse, which could push air into the well and should be avoided.

Re-measure and record the static groundwater level after the tubing has been placed in the well, and the water level has been allowed to stabilize again.

Determine the minimum purge volume required for the well. Samples should only be collected after the required volume has been removed from the well. For screen lengths of ten feet or less, a minimum volume of one saturated screen length plus drawdown volume must be removed. For screen lengths greater than ten feet, a minimum purge volume of three saturated screen lengths plus drawdown volume must be removed.

If the depth to water is less than the depth to the top of the screen, the screen is fully saturated and the minimum purge volume is one saturated screen length plus drawdown volume for screens of ten feet of less or three saturated screen lengths plus drawdown volume for screens greater than ten feet.

If the depth to water is greater than the depth to the top of the screen, calculate the well volume. Subtract the difference between the depth to water and the depth to the top of the screen from the well screen length to obtain the saturated well screen length. Round the saturated well screen length up to the nearest foot, and calculate the well volume using the volume per foot of screen length. Multiply the saturated well screen volume by three if the well screen length is greater than 10 feet.

Record the saturated well screen length and the saturated well screen volume on the sampling worksheet.

Commence purging at the slowest possible flow rate and slowly increase the speed until discharge occurs. The pump rate should be set to allow for maximum flow rate (100-1,000 milliliters per minute) with no drawdown. Refer to historical purge information for recharge information. Under no circumstances should the well be pumped dry and once pumping is begun, it should not be interrupted until all sample volume has been collected. Collect all purge water in a bucket or carboy.

Once the stagnant volume in the tubing has been removed (see below for volume equation), drawdown has stopped, and an acceptable flow rate has been established, begin monitoring indicator parameters and continue monitoring flow rate and water level. Record readings every three to five minutes, or as appropriate for the flow rate and flow-through cell volume. Use the water quality meter to monitor the following: temperature, pH, specific conductance, DO, and ORP. Use a turbidity meter to monitor turbidity.

- Tubing radius = r = 0.0104 ft.
- Volume of tubing = r2 x length of tubing = V (in ft3)
- ft3 x 28.316 = liters
- In the event that the well has extremely low recharge such that the lowest purge rate possible (100 mL/min or more, if equipment cannot effectively purge that slowly) continues to dewater the well, do not allow a water level that was above the top of the screen to drop below it,
- Do not allow a water level already below the top of the screen to drop further,
- Do not allow the water level to drop below the pump intake,
- Do not pump the well dry under any circumstances.
- Notify the field team leader of the situation. If all efforts to avoid dewatering the well have failed, a decision may be made to allow the well to recharge to a level sufficient to allow for collection of the necessary sample volume and to sample the well immediately.
- Record detailed notes concerning the sampling of the well.

Stop purging when all parameters have stabilized. Parameters are considered to have stabilized if, over three consecutive readings, the following criteria are met:

- pH ± 0.1 unit
- specific conductance and temperature ± 3%
- turbidity ± 10% or < 5 NTU
- DO ± 10% (down to a detection limit of 0.5 mg/L)
- ORP ± 10 mV

The reporting limits presented are the lowest concentrations to which the instrument is considered linear and therefore accurate. Three consecutive readings below the reporting limits presented are considered to be stable.

Readings should be recorded approximately every 5 minutes for flows in the range of 200 to 500 ml/min. Readings should be taken less frequently if the maximum flow rate is less than 100 ml/min because of the retention time in the flow-through cell. Each reading should represent a fresh aliquot of groundwater in the flow-through cell.

Record the time at which the required minimum volume was removed, and record the total volume removed prior to sampling.

If parameters do not stabilize, or turbidity remains greater than 5 NTU, or the minimum volume cannot be removed prior to the maximum purging time, contact the field team leader. Technical judgment will be used to ascertain when sampling should be commenced.

5.4 Sampling with Submersible Pumps

The procedure for sampling with submersible pumps is as follows:

Prior to placing any equipment in the well, measure and record the static water level as described in the water level measurement Standard operating procedure.

Note the water level in relation to the top of the screen. If the static water level is above the top of the screen, care should be taken to prevent the water level from dropping below the top of the screen.

Determine the depth at which the samples will be collected by referring to the Work Plan. Samples are frequently collected from the most-contaminated interval, as determined by previous profiling investigations, or from the lower part of the screened interval, or the midpoint of the saturated screened interval. If possible, keep the pump intake at least two feet above the bottom of the well to minimize mobilization of sediment that may be present at the bottom of the well.

Connect the pump to the power source. Submersible pumps are driven by an external power source.

If the use of a generator is required, it should be placed downwind of the sampling location to prevent exhaust from impacting the samples.

Care must be taken in handling the generator and gasoline to preclude cross-contamination of the samples and sampling equipment.

At a minimum, samplers must change gloves after handling the fuel or generator prior to sampling.

Carefully lower the pump to the desired sampling depth using the suspension cable. Take care to minimize disturbance and contact with the well walls which could knock rust or other deposits into the standing water.

Secure the pump using the suspension cable, and connect the ground from the pump.

Connect the purge water discharge line to the water quality meter using a splitter and pinch valve so that an aliquot of purge water can be obtained before the flow-through cell for turbidity measurements.

Connect the outflow end of the purge water line to the HDPE Y connector using a short piece of Pharmed silicone tubing if necessary. Attach a piece of Pharmed silicone tubing to one end of the wye and close it with a pinch value or check valve unit.

- Samples for turbidity measurements will be collected by opening this pinch valve.

Connect the other end of the Y connector to the lower of the two openings in the flow-through cell using Teflon tubing and short pieces of Pharmed silicon tubing at the joints.

Connect a piece of Teflon tubing to the out flow of the flow-through cell to the purge bucket. Use a short piece of Pharmed silicon tubing at the joint.

Be sure to use a piece of Teflon tubing sufficiently long to allow purge water to flow easily into the purge bucket.

Re-measure the static water level.

Determine the minimum purge volume required for the well.

Samples should only be collected after the required volume has been removed from the well.

For screen lengths of ten feet or less, a minimum volume of one saturated screen length plus drawdown volume must be removed.

For screen lengths greater than ten feet, a minimum purge volume of three saturated screen lengths plus drawdown volume must be removed.

If the depth to water is less than the depth to the top of the screen, the screen is fully saturated and the minimum purge volume is one saturated screen length plus drawdown volume for screens of ten feet of less or three saturated screen lengths plus drawdown volume for screens greater than ten feet.

If the depth to water is greater than the depth to the top of the screen, calculate the well volume. Subtract the difference between the depth to water and the depth to the top of the screen from the well screen length to obtain the saturated well screen length. Round the saturated well screen length up to the nearest foot, and calculate the well volume using the volume per foot of screen length. Multiply the saturated well screen volume by three if the well screen length is greater than 10 feet.

Record the saturated well screen length and the saturated well screen volume on the sampling worksheet.

Start the pump and begin purging at the slowest rate possible.

- Note the purge start time. Slowly increase the speed until discharge begins.
- The pump should be set to allow for adequate recharge such that a maximum flow rate with no drawdown is achieved (generally 100-1,000 mL/min).
- Refer to the historical flow controller settings for the well to select the starting controller pressure and intake and discharge intervals.

Collect all purge water in a bucket or carboy.

Measure the flow rate using a graduated cylinder and time piece and monitor the water level and pumping rate during purging.

Under no circumstances should purging be interrupted until all sample volume has been collected.

Once drawdown has stopped and an acceptable flow rate established, begin monitoring indicator parameters and continue monitoring flow rate and water level. Record a reading every three to five minutes, or as appropriate for the flow rate and flow-through cell volume. Use the water quality meter to monitor the following: temperature, pH, specific conductance, DO, and ORP. Use a turbidity meter to monitor turbidity.

In the event that the well has extremely low recharge such that the lowest purge rate possible (100 mL/min or more, if equipment cannot effectively purge that slowly) continues to dewater the well, do not allow a water level that was above the top of the screen to drop below it, do not allow a water level already below the top of the screen to drop further, do not allow the water level to drop below the pump intake, and do not pump the well dry under any circumstances. Notify the field team leader of the situation. If all efforts to avoid dewatering the well have failed, a decision may be made to allow the well to recharge to a level sufficient to allow for collection of the necessary sample volume and to sample the well immediately. Record detailed notes concerning the sampling of the well.

Stop purging when all parameters have stabilized. Parameters are considered to have stabilized if, over three consecutive readings, the following criteria are met:

- pH ± 0.1 unit
- specific conductance and temperature ± 3%
- turbidity ± 10% or < 5 NTU
- DO ± 10% (down to a detection limit of 0.5 mg/L)
- ORP ± 10 mV

The reporting limits presented are the lowest concentrations to which the instrument is considered linear and therefore accurate. Three consecutive readings below the reporting limits presented are considered to be stable.

Readings should be recorded approximately every 5 minutes for flows in the range of 200 to 500 ml/min. Readings should be taken less frequently if the maximum flow rate is less than 100 ml/min because of the retention time in the flow-through cell. Each reading should represent a fresh aliquot of groundwater in the flow-through cell.

Record the time at which the required minimum volume was removed, and record the total volume removed prior to sampling.

If parameters do not stabilize, or turbidity remains greater than 5 NTU, or the minimum volume can not be removed prior to the maximum purging time, contact the field team leader. Technical judgment will be used to ascertain when sampling should be commenced.

5.5 Sampling

Once purging has been completed, test for oxidants and sulfides as required for the analyses to be conducted and in accordance with standard operating procedures. Prior to commencing sampling,

- Measure and record final water level, temperature, pH, specific conductance, DO, ORP, turbidity, and flow rate.
- Disconnect the purge tubing from the flow-through cell, such that sample water will be collected directly from the tubing.

In keeping with convention, samples should be collected in order of decreasing volatility and reactivity so that the most volatile or reactive samples are collected first. The following are general guidelines. More specific information may be presented in the Quality Assurance Project Plan (QAPP).

- Gases (methane/ethane/ethene/hydrogen/CO2)
- Volatile Organic Compounds
- Semivolatile Organic Compounds
- Pesticide/PCBs
- Dioxins

- Metals

During sample collection, allow the water to flow directly into and down the side of the sample container without allowing the tubing to touch the inside of the sample container or lid, in order to minimize aeration and maintain sample integrity.

In some instances the bladder pump controller pumps water out of the sample tubing in a forceful manner, such that the gases and VOC samples may be compromised. If this is the case, the non-VOC samples should be collected first. Once the non-VOC samples are collected, adjust the flow rate on the bladder pump controller so that the water is no longer being pumped out of the sample tubing in a forceful manner, and collect the samples for analysis of gases and VOCs. Document the modification to the procedure, the adjusted flow rate, and all samples collected in this manner on the monitoring well sampling worksheet and/or field logbook.

5.6 Post-Sampling Field Activities

Preserve the samples as per standard operating procedures for preservation. Immediately label the sample containers with the sample collection date and time and place them on ice. Complete the COC forms as soon as possible.

Cease pumping and disassemble the purging and sampling equipment.

Replace the well cap and lock the outer protective casing.

Decontaminate the sampling equipment as per standard operating procedures for decontamination.

Dispose of all purge water as per the site-specific work plan.

6.0 Quality assurance / quality control

The tubing and lines associated with sampling pumps are typically long and awkward to handle, and careful handling is required to prevent introduction of contaminants into the well. It is therefore preferable for set-up and installation of sampling equipment to be performed by a team of at least two people in order to prevent contamination of equipment to be introduced into the well.

Duplicate measurements cannot effectively be taken using the flow-though cell, since two consecutive measurements taken are not measuring the same sample, and flow cannot be interrupted. Water quality parameters obtained should be compared to historical readings, and potential instrument issues should be considered in the event of major differences.

6.1 Pollution Prevention and Waste Management

Purge water volume is kept to a minimum through the use of the low-stress sampling procedures. When available, historical information on sampling rates for each well will be used in an attempt to minimize time spent determining the equilibrium flow rate and thereby minimizing purge water volume.

Lengths of Teflon tubing removed from each roll of tubing will be tracked to maximize use and minimize waste of remaining pieces.

Disposable tubing will be disposed of in accordance with the site-specific sampling and analysis plan.

Purge water will be containerized until purging and sampling activities at the well are completed. Purge water will then be disposed of in accordance with the site-specific sampling and analysis plan

7.0 Data and records management

All documentation will be conducted in accordance with standard documentation procedures.

Groundwater sampling information specific to each well will be recorded on the monitoring well sampling worksheet. An example monitoring well worksheet is included as Attachment 1 of this POP. Activities common to more than one well, samples collected, deviations from the sampling and analysis plan, and any other unusual occurrences will also be documented in the field logbook in accordance with standard documentation procedures.

8.0 Personnel qualifications and training

All field samplers are required to take the 40-hour OSHA health and safety training course and annual 8-hour refresher courses prior to engaging in any field collection activities.

The entire sampling team should read and be familiar with the site Health and Safety Plan, Work Plan, QAPP (and the most recent amendments), and all relevant POPs before going onsite for the sampling event. It is recommended that the field sampling leader attest to the understanding of these site documents and that it is recorded.

Samplers will have a minimum of one-weeks' experience performing low-stress sampling prior to sampling without supervision

9.0 References

U.S. Environmental Protection Agency, Region 1. *Low-Stress (Low Flow) Purging and Sampling Procedure for the Collection of Groundwater Samples from Monitoring Wells,* Revision 3, January 19, 2010.

Vroblesky, Don A., Clifton C. Casey, and Mark A. Lowery, Summer 2007, *Influence of Dissolved Oxygen Convection on Well Sampling*, Ground Water Monitoring & Remediation 27, no. 3: 49-58.

10.0 Revision History

Revision	Date	Changes
0	June 2010	Original POP
1	September 2010	Minor detail added to last paragraph of Section 5.5.

Figure 1: Low-Flow Setup Diagram

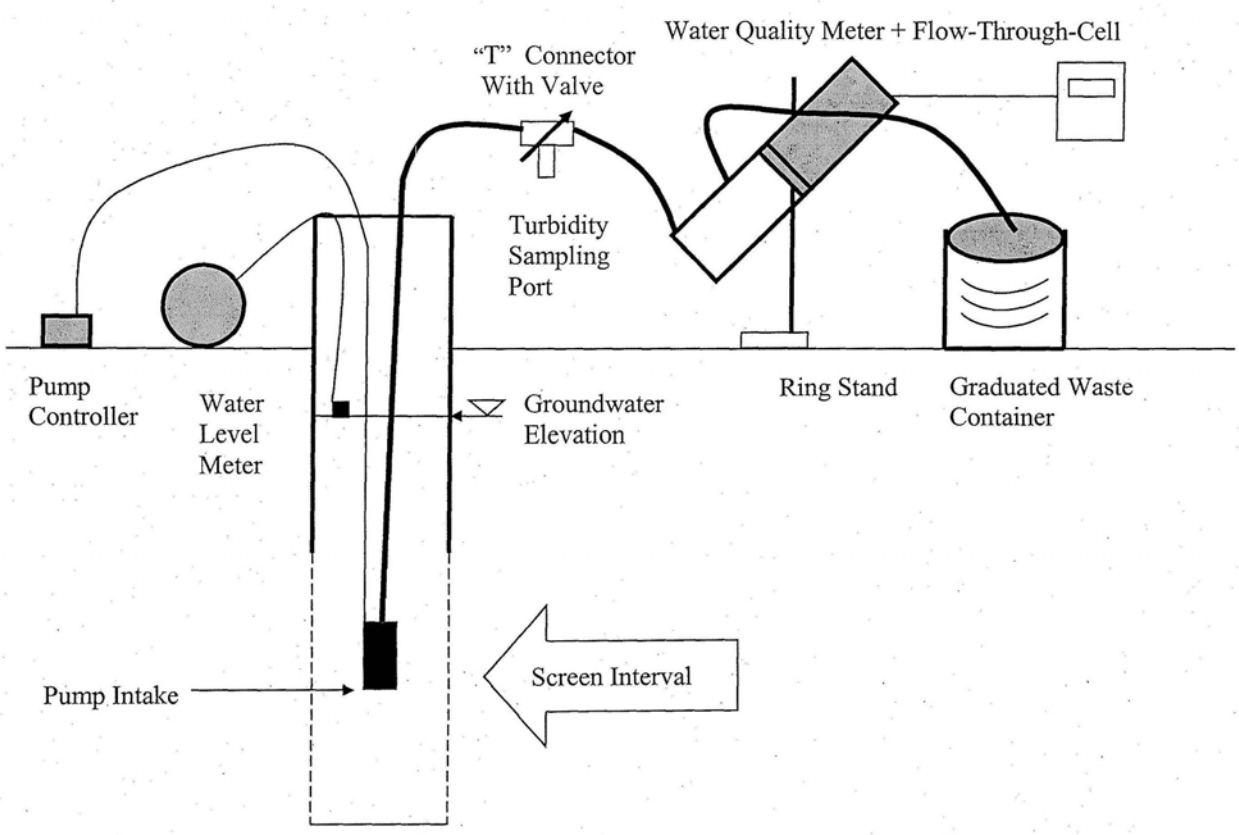

Attachment 1: Monitoring Well Sampling Worksheet

Well Purging-Field Water Quality Measurement Form

Page 1 of 1

Location (Site/Facility Name): Southwest Properties		Screen Interval	Top / Bottom
Well #	Date:	From MP in feet:	
Field Personnel:		Pump Intake depth (ft below MP):	
Sampling Organization: AECOM		Purging Device; (pump type):	
Identify Measuring Point (MP):		Weather:	

Clock Time 24 HR	Depth to Water ft	Pump Dial	Purge Rate ml/min	Cum. Volume Purged gal	Temp. °C	Spec. Conductivity µS/cm²	pH s.u.	ORP mV	DO mg/L	Turb-idity NTU	Comments

Stabilization Criteria:

Temp +/- 3%	ORP +/- 10 mv
Spec. Cond +/- 3%	DO +/- 10% for values greater than 0.5 mg/L.
pH +/- 0.1 SU	Turb +/- 10% or <5

AECOM

Project Operating Procedure

Decontamination of Field Equipment

Procedure Number: 009

Revision No.: 0

Revision Date: June 2010

Robert Shoemaker, POP Author

Date: June 2010

Joanne Lynch, Project Manager

Date: April 2012

Annual review of this POP has been performed and the POP still reflects current practice.

Initials: _____ Date: _____

Initials: _____ Date: _____

J:\Indl_Service\Project Files\BASF-0760\Cranston RI\7_Deliverables\12. Supplemental RI\AD\Appendix A\BASF POP 009 Decontamination of Field Equipment.doc

Contents

1.0 Project Scope and applicability 1

2.0 Health and safety considerations 2

3.0 Interferences 2

4.0 Equipment and materials 2

5.0 Procedures 3

6.0 Quality assurance / quality control 6

7.0 Data and records management 7

8.0 Personnel qualifications and training 7

9.0 References 8

10.0 Revision History 8

1.0 Project Scope and applicability

1.1 Purpose and Applicability

This POP describes the methods to be used for the decontamination of field equipment used in the collection of environmental samples. The list of field equipment may include a variety of items used in the collection of soil and/or water samples, such as split-spoon samplers, trowels, scoops, spoons, bailers and pumps. Heavy equipment such as drill rigs and backhoes also require decontamination, usually in a specially constructed temporary decontamination area.

Decontamination is performed as a quality assurance measure and a safety precaution. Improperly decontaminated sampling equipment can lead to misinterpretation of environmental data due to interference caused by cross-contamination. Decontamination protects field personnel from potential exposure to hazardous materials. Decontamination also protects the community by preventing transportation of contaminants from a site.

This POP emphasizes decontamination procedures to be used for decontamination of reusable field equipment. Occasionally, dedicated field equipment such as well construction materials (well screen and riser pipe) or disposable field equipment (bailers or other general sampling implements) may also require decontamination prior to use. The project-specific work plan should indicate the specific decontamination requirements for a particular project.

Respective state or federal agency (regional offices) regulations may require specific types of equipment or procedures for use in decontamination of field equipment. The project manager should review the applicable regulatory requirements, if any, prior to the start of the field investigation program.

1.2 General Principles

Decontamination is accomplished by manually scrubbing, washing, or spraying equipment with detergent solutions, tap water, distilled/deionized water, steam and/or high pressure water, or solvents. The decontamination method and agents are generally determined on a project-specific basis and must be stated in the Quality Assurance Project Plan (QAPP).

Generally, decontamination of equipment is accomplished at each sampling site between collection points. Waste decontamination materials such as spent liquids and solids will be collected and managed as investigation-derived waste (IDW) for later disposal. All decontamination materials, including wastes, should be stored in a central location so as to maintain control over the quantity of materials used or produced throughout the investigation program.

2.0 Health and safety considerations

Decontamination procedures may involve chemical exposure hazards associated with the type of contaminants encountered or solvents employed and may involve physical hazards associated with decontamination equipment. When decontamination is performed on equipment which has been in contact with hazardous materials or when the quality assurance objectives of the project require decontamination with chemical solvents, the measures necessary to protect personnel must be addressed in the project Health and Safety Plan (HASP). This plan must be approved by the project Health and Safety Officer before work commences, must be distributed to all personnel performing equipment decontamination, and must be adhered to as field activities are performed.

3.0 Interferences

Improper decontamination can result is sample contamination and affect the accuracy of data.

4.0 Equipment and materials

- Decontamination agents (per work plan requirements):
    - LIQUI-NOX, ALCONOX, or other phosphate-free biodegradable detergent,
    - Tap water,
    - Distilled/deionized water,
    - Nitric acid and/or hydrochloric acid,
    - Methanol and/or hexane, acetone, isopropanol.
- Health and Safety equipment
- Chemical-free paper towels
- Waste storage containers: drums, 5-gallon pails w/covers, plastic bags
- Cleaning containers: plastic buckets or tubs, galvanized steel pans, pump cleaning cylinder
- Cleaning brushes
- Pressure sprayers
- Squeeze bottles
- Plastic sheeting

- Aluminum foil
- Field project notebook/pen

5.0 Procedures

5.1 General Preparation

It should be assumed that all sampling equipment, even new items, are contaminated until the proper decontamination procedures have been performed on them or unless a certificate of analysis is available which demonstrates the items cleanliness.

Field equipment that is not frequently used should be wrapped in aluminum foil, shiny side out, and stored in a designated "clean" area. Small field equipment can also be stored in plastic bags to eliminate the potential for contamination. Field equipment should be inspected and decontaminated prior to use if the equipment appears contaminated and/or has been stored for long periods of time. Unless customized procedures are stated in the Work Plan and/or QAPP for decontamination of equipment, the standard procedures specified in this POP shall be followed.

Establish the decontamination station within an area that is convenient to the sampling location. If single samples will be collected from multiple locations, then a centralized decontamination station, or a portable decontamination station should be established.

An investigation-derived waste (IDW) containment station should be established at this time also. The project-specific work plan should specify the requirements for IDW containment. In general, decontamination solutions are discarded as IDW between sampling locations. Solid waste is disposed of as it is generated.

5.2 Decontamination for Organic Analyses

This procedure applies to soil sampling and groundwater sampling equipment used in the collection of environmental samples submitted for organic constituents' analysis. Examples of relevant items of equipment include split-spoons, trowels, scoops/spoons, bailers, and other small items. Submersible pump decontamination procedures are outlined in Section 5.4.

Decontamination is to be performed before sampling events and between sampling points.

After a sample has been collected, remove all gross contamination from the equipment or material by brushing and then rinsing with available tap water. This initial step may be completed using a 5-gallon pail filled with tap water. Steam or a high-pressure water rinse may also be conducted to remove solids and/or other contamination.

Wash the equipment with a phosphate-free detergent and tap water solution. This solution should be kept in a 5-gallon pail with its own brush.

Rinse with tap water or distilled/deionized water until all detergent and other residue is washed away. This step can be performed over an empty bucket using a squeeze bottle or pressure sprayer.

Rinse with methanol or other appropriate solvent using a squeeze bottle or pressure sprayer. Rinsate should be collected in a waste bucket.

Re-rinse with deionized water to remove any residual solvent. Rinsate should be collected in the solvent waste bucket.

Allow the equipment to air-dry in a clean area or blot with chemical-free paper towels before reuse. Wrap the equipment in tin foil and/or seal it in a plastic bag if it will not be reused for a while.

Dispose of soiled materials and spent solutions in the designated IDW disposal containers.

5.3 Decontamination for Inorganic (Metals) Analyses

This procedure applies to soil sampling equipment used primarily in the collection of environmental samples submitted for inorganic constituents' analysis. Examples of relevant items of equipment include split-spoons, trowels, scoops/spoons, bailers, and other small items.

For plastic and glass sampling equipment, follow the steps outlined in 5.2 above, however, use a 10% nitric acid solution (acid in water) in place of the solvent rinse.

For metal sampling equipment, follow the steps outlined in 5.2 above, however, use a 10% hydrochloric acid solution (acid in water) in place of the solvent rinse.

5.4 Decontamination of Submersible Pumps

This procedure will be used to decontaminate submersible pumps before and between ground-water sample collection points. This procedure applies to both electric submersible and bladder pumps. This procedure also applies to discharge tubing if it will be reused between sampling points.

Prepare the decontamination area if pump decontamination will be conducted next to the sampling point. If decontamination will occur at another location, the pump and tubing may be removed from the well and placed into a clean trash bag for transport to the decontamination area. Pump decontamination is easier with the use of 3-foot tall pump cleaning cylinders (i.e., Nalgene cylinder) for the various cleaning solutions, although the standard bucket rinse equipment may be used.

Once the decontamination station is established, the pump should be removed from the well and the discharge tubing and power cord coiled by hand as the equipment is removed. If any of the equipment needs to be put down temporarily, place it on a plastic sheet (around well) or in a clean trash bag. If a disposable discharge line is used it should be removed and discarded at this time.

As a first step in the decontamination procedure, use a pressure sprayer with tap water to rinse the exterior of the pump, discharge line, and power cord as necessary. Collect the rinsate and handle as IDW.

Place the pump into a pump cleaning cylinder or bucket containing a detergent solution (detergent in tap water). Holding the tubing/power cord, pump solution through the pump system. A minimum of one gallon of detergent solution should be pumped through the system. Collect the rinsate and handle as IDW.

Place the pump into another cylinder/bucket containing a 10% solution of solvent (methanol, or other designated solvent) in distilled/deionized water. Pump until the detergent solution is removed. Collect the rinsate and handle as IDW.

Place the pump into another cylinder/bucket containing distilled/deionized water. Pump a minimum of 3 to 5 pump system volumes (pump and tubing) of water through the system. Collect the rinsate and handle as IDW.

Remove the pump from the cylinder/bucket and if the pump is reversible, place the pump in the reverse mode to discharge all removable water from the system. If the pump is not reversible the pump and discharge line should be drained by hand as much as possible. Collect the rinsate and handle as IDW.

Using a pressure sprayer with distilled/deionized water, rinse the exterior of the pump, discharge line, and power cord thoroughly, shake all excess water, then place the pump system into a clean trash bag for storage. If the pump system will not be used again right away, the pump itself should also be wrapped with aluminum foil before placing it into the bag.

5.5 Decontamination of Large Equipment

Consult the Work Plan for instruction on the location of the decontamination station and the method of containment of the wash solutions. On large projects usually a temporary decontamination facility (decontamination pad) is required which may include a membrane-lined and bermed area large enough to drive heavy equipment (drill rig, backhoe) onto with enough space to spread other equipment and to contain overspray. Usually a small sump with pump is necessary to collect and contain rinsate. A water supply and power source is also necessary to run steam cleaning and/or pressure washing equipment.

Upon arrival and prior to leaving a sampling site, all heavy equipment such as drill rigs, trucks, and backhoes should be thoroughly cleaned and then the parts of the equipment which come in contact or in close proximity to sampling activity should be decontaminated. This can be accomplished in two ways, steam cleaning or high pressure water wash and manual scrubbing. Following this initial cleaning, only those parts of the equipment which come in close proximity to the sampling activities (i.e., auger stems, rods, backhoe bucket) must be decontaminated in between sampling events.

Occasionally, well construction materials such as well screen and riser pipe may require decontamination before the well materials are used. These materials may be washed in the decontamination pad, preferably on a raised surface above the pad (i.e., on sawhorses), with clean plastic draped over the work surfaces. Well materials usually do not require a multistep cleaning process as they generally arrive clean from the manufacturer. Usually, a thorough steam-cleaning of the interior/exterior of the well materials will be sufficient. The Work Plan should provide specific guidance regarding decontamination of well materials.

6.0 Quality assurance / quality control

6.1 General Considerations

Sampling personnel should follow specific quality assurance guidelines as outlined in the site-specific QAPP. The QAPP guidelines typically require collection of equipment blank samples in order to determine the effectiveness of the decontamination procedure.

The decontamination method, solvent, frequency, location on site and the method of containment and disposal of decontamination wash solids and solutions are dependent on site logistics, site-specific chemistry, and nature of the contaminated media to be studied and the objectives of the study. Each topic must be considered and addressed during development of a decontamination strategy and should be outlined in the Work Plan.

6.2 Solvent Selection

There are several factors which need to be considered when deciding upon a decontamination solvent. The solvent should not be an analyte of interest. The sampling equipment must be resistant to the solvent. The solvent must be evaporative or water soluble or preferably both. The applicable regulatory agency may have specific requirements regarding decontamination solvents. The QAPP should specify the type of solvent to be used for a particular project.

The analytical objectives of the study must also be considered when deciding upon a decontamination solvent. Pesticide-grade methanol is the solvent of choice for general organic analyses. It is relatively safe and effective. Hexane, acetone, and isopropanol are sometimes used as well. A 10% nitric acid in deionized water solution is the solvent of choice for general metals analyses. Nitric acid can be used only on Teflon, plastics and glass. If used on metal equipment, nitric acid will eventually corrode the metal and lead to the introduction of metals to the collected samples. Dilute hydrochloric acid is usually preferred over nitric acid when cleaning metal sampling equipment.

Equipment decontamination should be performed a safe distance away from the sampling area so as not to interfere with sampling activities but close enough to the sampling area to maintain an efficient working environment. If heavy equipment such as drill rigs or backhoes are to be decontaminated, then a central decontamination station should be constructed with access to a power source and water supply.

6.3 Field Blank Sample Collection

General guidelines for quality control check of field equipment decontamination usually require the collection of one field blank from the decontaminated equipment per day. The QAPP should specify the type and frequency of collection of each type of quality assurance sample.

Field blanks are generally made by pouring laboratory-supplied deionized water into, over, or through the freshly decontaminated sampling equipment and then transferring this water into a sample container. Field blanks should then be labeled as a sample and submitted to the laboratory to be analyzed for the same parameters as the associated sample. Field blank sample numbers, as well as collection method, time and location should be recorded in the field notebook.

7.0 Data and records management

Specific information regarding decontamination procedures should be documented in the project-specific field notebook. Documentation within the notebook should thoroughly describe the construction of each decontamination facility and the decontamination steps implemented in order to show compliance with the project work plan. Decontamination events should be logged when they occur with the following information documented:

- Date, time and location of each decontamination event
- Equipment decontaminated
- Method
- Solvents
- Noteable circumstances
- Identification of field blanks and decontamination rinsates
- Method of blank and rinsate collection
- Date, time and location of blank and rinsate collection
- Disposition of IDW

Repetitive decontamination of small items of equipment does not need to be logged each time the item is cleaned.

8.0 Personnel qualifications and training

All sampling technicians performing decontamination must be properly trained in the decontamination procedures employed, the project data quality objectives, health and safety procedures and the project QA procedures. Specific training or orientation will be provided for each project to ensure that personnel understand the special circumstances and requirements of that project. Field personnel should be health and safety certified as specified by OSHA (29 CFR 1910.120(e)(3)(i)) to work on sites where hazardous materials may be present.

8.1 Sampling Technician

It is the responsibility of the sampling technician to be familiar with the decontamination procedures outlined within this POP and with specific quality assurance, and health and safety requirements outlined within project-specific Work Plan, HASP, and/or QAPP. The sampling technician is responsible for decontamination of field equipment and for proper documentation of decontamination activities. The sampling technician is also responsible for ensuring that decontamination procedures are followed by subcontractors when heavy equipment requires decontamination.

8.2 Field Project Manager

The field project manager is responsible for ensuring that the required decontamination procedures are followed at all times. The project manager is also responsible for ensuring that subcontractors construct and operate their decontamination facilities according to project specifications. The project manager is responsible for collection and control of IDW in accordance with project specifications.

9.0 References

Not applicable.

10.0 Revision History

Revision	Date	Changes
0	June 2010	Original POP

AECOM

Project Operating Procedure

Packaging and Shipment of Environmental Samples

Procedure Number: 010

Revision No.: 0

Revision Date: June 2010

Robert Shoemaker, POP Author

Date: June 2010

Joanne Lynch, Project Manager

Date: June 2010

Annual review of this POP has been performed and the POP still reflects current practice.

Initials: _____ Date: _____

Initials: _____ Date: _____

Contents

1.0 Project Scope and applicability 1

2.0 Health and safety considerations 1

3.0 Interferences 2

4.0 Equipment and materials 2

5.0 Procedures 3

6.0 Quality assurance / quality control 7

7.0 Data and records management 7

8.0 Personnel qualifications and training 7

9.0 References 8

10.0 Revision History 8

List of Figures

Figure 1 Example of Chain-of-Custody

Figure 2 Example Chain-of-Custody Tape

Project Operating Procedure

Packaging and Shipment of Environmental Samples

1.0 Project Scope and applicability

1.1 Purpose and Applicability

This Project Operating Procedure (POP) describes the procedures associated with the packaging and shipment of environmental samples. Two general categories of samples exist: environmental samples consisting of water and soil submitted for routine environmental testing, and waste material samples which include non-hazardous solid wastes and/or hazardous wastes as defined by 40 CFR Part 261 submitted for environmental testing or bench/pilot-scale treatability testing. Packaging and shipping procedures will differ for the two sample categories.

This POP is applicable to packaging and shipment of environmental samples submitted for routine environmental testing. Environmental samples are not considered a hazardous waste by definition; therefore, more stringent Department of Transportation (DOT) regulations regarding sample transportation do not apply. Environmental samples do, however, require fairly stringent packaging and shipping measures to ensure sample integrity as well as safety for those individuals handling and transporting the samples.

This POP is designed to provide a high degree of certainty that environmental samples will arrive at their destination intact. This POP assumes that samples will often require shipping overnight by a commercial carrier service, therefore, the procedures are more stringent than may be necessary if a laboratory courier is used or if samples are transported directly to their destination by a sampling team member. Should the latter occur, the procedures may be modified to reflect a lesser degree of packaging requirements.

Respective state or federal agency (regional offices) protocols may require or recommend specific types of equipment for use in sample packaging or a specific method of shipment that may vary from the indicated procedures. Deviations from this POP to accommodate other regulatory requirements should be reviewed in advance of the field program, should be explained in the project work plan, and must be documented in the field project notebook when they occur.

1.2 General Principles

Sample packaging and shipment generally involves the placement of individual sample containers into a cooler or other similar shipping container and placement of packing materials and coolant in such a manner as to isolate the samples, maintain the required temperature, and to limit the potential for damage to sample containers when the cooler is transported.

2.0 Health and safety considerations

Sampling personnel should be aware that packaging and shipment of samples involves potential physical hazards primarily associated with handling of occasional broken sample containers and lifting

of heavy objects. Adequate health and safety measures must be taken to protect sampling personnel from these potential hazards. The project Health and Safety Plan (HASP) generally addresses physical and other potential hazards. This plan must be approved by the project Health and Safety Officer before work commences, must be distributed to all personnel performing sampling, and must be adhered to as field activities are performed. In the absence of a HASP, work will be conducted according to the AECOM Health and Safety Policy and Procedures Manual and/or direction from the Regional Health and Safety Manager.

3.0 Interferences

Not Applicable

4.0 Equipment and materials

- Sample coolers
- Sample containers
- Shipping labels
- Chain-of-custody records, custody seals
- Bubble wrap
- Vermiculite (granular), or styrofoam pellets
- "Blue Ice" refreezable ice packs, or ice cubes
- Transparent tape, or rubber bands
- Fiber tape
- Duct tape
- Zipper-lock plastic bags
- Trash bags
- Health and Safety supplies
- Equipment decontamination materials
- Field project notebook/pen

5.0 Procedures

5.1 General Information

5.1.1 Regulatory Information

The extent and nature of sample containerization will be governed by the type of sample, and the most reasonable projection of the sample's hazardous nature and constituents. The EPA regulations (40 CFR Section 261.4(d)) specify that samples of solid waste, water, soil or air, collected for the sole purpose of testing, are exempt from regulation under the Resource Conservation and Recovery Act (RCRA) when any of the following conditions are applicable:

- Samples are being transported to a laboratory for analysis;
- Samples are being transported to the collector from the laboratory after analysis;
- Samples are being stored (1) by the collector prior to shipment for analyses, (2) by the analytical laboratory prior to analyses, (3) by the analytical laboratory after testing but prior to return of sample to the collector or pending the conclusion of a court case.

5.1.2 Sample Information:

The following information must accompany each shipment of samples on a chain-of-custody form (Figure 1) where each sample has an individual entry:

- Sample collector's name, mailing address and telephone number,
- Analytical laboratory's name, mailing address and telephone number,
- A unique identification of each sample,
- Sample description (matrix),
- Number and type of sample containers,
- Container size,
- Preservative,
- Type and method of analysis requested, and
- Date and time that the samples were collected and prepared for shipping,
- Special handling instructions, including notation of suspected high concentration samples.

5.1.3 Laboratory Notifications:

Prior to sample collection, the Project Manager, or designated alternative must notify the laboratory manager of the number, type and approximate collection and shipment dates for the samples. If the

number, type or date of sample shipment changes due to program changes which may occur in the field, the Project Manager or alternate must notify the laboratory of the changes. Additional notification from the field is often necessary when shipments are scheduled for weekend delivery.

5.2 General Site Preparation

5.2.1 Small Projects

Small projects of one or two days duration may require packaging and shipment of samples using the field vehicle as the sample preparation area. If sample coolers will be sent via third party commercial carrier service, adequate sample packaging materials should be sent to the project location in advance of sampling or purchased from stores located near the site.

5.2.2 Large Projects

Multi-day or week sampling programs usually require rental of an office trailer or use of existing office/storage facilities for storage of equipment as well as for sample preparation. If possible, a designated area should be selected for storage of unused sample containers/coolers and another area for sample handling, packaging, and shipment. Handling of environmental samples should preferably be conducted in a clean area and away from unused sample containers to minimize the potential for cross contamination. Large quantities of packaging materials may require advance special ordering. Shipping forms/labels may be preprinted to facilitate shipping.

5.2.3 Cooler Inspection and Decontamination

Laboratories will often re-use coolers. Every cooler received at a project location should be inspected for condition and cleanliness. Any coolers that have cracked interior or exterior linings/panels or hinges should be discarded as their insulating properties are now compromised. Any coolers missing one or both handles should also be discarded if replacement handles (i.e., knotted rope handles) can not be fashioned in the field. Replacement coolers may be purchased in the field if necessary.

The interior and exterior of each cooler should be inspected for cleanliness before using it. Excess strapping tape and old shipping labels should be removed. If the cooler interior exhibits visible contamination or odors it should be decontaminated in accordance with POP 009 Decontamination of Field Equipment prior to use. Drain plugs should be sealed on the inside with duct tape.

5.2.4 Other Considerations

VOC Samples - Sample containers used for VOC analysis may be grouped into a single cooler, with separate chain-of-custody record, to limit the number of trip blanks required for transportation and analysis. Individual VOC samples may also be placed into Zipper-lock bags to further protect the samples.

Contaminated Samples - Sample containers with presumed high contaminant concentrations should be isolated within their own cooler with each sample container placed into a Zipper-lock bag.

5.3 Sample Packaging Method

Sample packaging should be conducted in the following manner:

Place plastic bubble wrap matting over the base of each cooler or shipping container as needed. A 2- to 3-inch thickness layer of vermiculite may be used as a substitute base material.

Insert a clean trash bag into the cooler to serve as a liner.

Check that each sample container is sealed, labeled legibly, and is externally clean. Re-label and/or wipe bottles clean if necessary. Clear tape should be placed over the labels to protect them. Wrap each sample bottle individually with bubble wrap secured with tape or rubber bands. Place bottles into the cooler in an upright single layer with approximately one inch of space between each bottle. Do not stack bottles or place them in the cooler lying on their side. If plastic and glass sample containers are used, alternate the placement of each type of container within the cooler so that glass bottles are not placed side by side.

Insert cooler temperature blanks if required.

Place additional vermiculite, bubble wrap, and/or styrofoam pellet packing material throughout the voids between sample containers within each cooler to a level which meets the approximate top of the sample containers. Packing material may require tamping by hand to reduce the potential for settling.

Place cubed ice or cold packs in heavy duty Zip-lock type plastic bags, close the bags, and distribute the packages in a layer over the top of the samples. Cubed ice should be double-bagged to prevent leakage. Loose ice should never be used. Cold packs should be used only if the samples are chilled before being placed in the cooler.

Add additional bubble wrap/styrofoam pellets or other packing materials to fill the balance of the cooler or container.

Obtain two pieces of chain of custody tape as shown in Figure 2 and enter the custody tape numbers in the appropriate place on the chain-of-custody form. Sign and date the chain-of-custody tape.

Complete the chain-of-custody form. If shipping the samples involves use of a third party commercial carrier service, sign the chain-of-custody record thereby relinquishing custody of the samples. Shippers should not be asked to sign chain of custody records. If a laboratory courier is used, or if samples are transported to the laboratory, the receiving party should accept custody and sign the chain-of-custody records. Remove the last copy from the form and retain it with other field notes. Place the original (with remaining copies) in a Zipper-lock type plastic bag and tape the bag to the inside lid of the cooler or shipping container.

Close the top or lid of the cooler or shipping container.

Place the chain of custody tape at two different locations (i.e., one tape on each side) on the cooler or container lid and overlap with transparent packaging tape.

Packaging tape should be placed entirely around the sample shipment containers. A minimum of two full wraps of packaging tape will be placed at least two places on the cooler.

Repeat the above steps for each cooler or shipping container.

5.4 Sample Shipping Method

Packaged sample coolers should be shipped using one of the following options:

5.4.1 Hand Delivery

When a project member is transporting samples by automobile to the laboratory, the cooler should only be sealed with tape. In these cases, chain-of-custody will be maintained by the person transporting the sample and chain-of-custody tape need not be used. Chain-of-custody records should be relinquished upon delivery and a copy of the record retained in the project file.

5.4.2 Laboratory Courier

Laboratory couriers are usually employees of the analytical laboratory receiving the samples. As such, they will accept custody of the samples and must be asked to sign the chain-of-custody records. Chain-of-custody records do not need to be sealed in the cooler although it is recommended that the coolers be sealed with tape. All other packaging requirements generally apply unless otherwise specified in the SAP.

If the laboratory courier is not authorized to accept custody of the samples, or if the requirements of the project plan preclude transfer to the laboratory courier, samples will be handled as described below in Section 5.4.3.

5.4.3 Third Party Courier

If overnight shipment is required, a third party package delivery service should be used. Transport the cooler to the package delivery service office or arrange for package pick-up at the site. Fill out the appropriate shipping form or airbill and affix it to the cooler. Some courier services may use multi-package shipping forms where only one form needs to be filled out for all packages going to the same destination. If not, a separate shipping form should be used for each cooler. Keep the receipt for package tracking purposes should a package become lost. Please note that each cooler also requires a shipping label which indicates point of origin and destination. This will aid in recovery of a lost cooler if a shipping form gets misplaced. Never leave coolers unattended while waiting for package pick-up. Airbills or waybills will be maintained as part of the custody documentation.

5.5 Sample Receipt

Upon receipt of the samples, the analytical laboratory will open the cooler or shipping container and will sign "received by laboratory" on each chain-of-custody form. The laboratory will verify that the chain-of-custody tape has not been broken previously and that the tape number corresponds with the number on the chain-of-custody record. The laboratory will note the condition of the samples upon receipt and will identify any discrepancies between the contents of the cooler and chain-of-custody. The analytical laboratory will then forward the back copy of the chain-of-custody record to the project manager to indicate that sample transmittal is complete.

6.0 Quality assurance / quality control

Sampling personnel should follow specific quality assurance guidelines as outlined in the site-specific work plan or QAPP. Proper quality assurance requirements should be provided which will specify sample packaging and shipment requirements if variations to the indicated procedures are necessary on a particular project.

The potential for samples to break during transport increases greatly if individual containers are not snugly packed into the cooler. Completed coolers may be lightly shake-tested to check for any loose bottles. The cooler should be repacked if loose bottles are detected.

Environmental samples are generally shipped so that the samples are maintained at a temperature of approximately 4°C. Temperature blanks may be required for some projects as a quality assurance check on shipping temperature conditions. These blanks usually are supplied by the laboratory and consist of a 40-ml vial or plastic bottle filled with tap water. Temperature blanks should be placed near the center of the cooler.

7.0 Data and records management

Documentation supporting sample packaging and shipment generally consists of chain-of-custody records and shipping records. In addition, a description of sample packaging procedures will be written in the field project notebook. All documentation will be retained in the project files following project completion.

8.0 Personnel qualifications and training

Sample packaging and shipment is a relatively simple procedure requiring minimal training and a minimal amount of equipment. It is, however, recommended that initial attempts be supervised by more experienced personnel. Sampling technicians should be health and safety certified as specified

by OSHA (29 CFR 1910.120(e)(3)(i)) to work on sites where hazardous waste materials are considered to be present.

8.1 Sampling Technician

It is the responsibility of the sampling technician to be familiar with the procedures outlined within this POP and with specific sampling, quality assurance, and health and safety requirements outlined within the project-specific plans. The sampling technician is responsible for proper packaging and shipment of environmental samples and for proper documentation of sampling activities for the duration of the sampling program.

8.2 Sampling Coordinator

Large sampling programs may require additional support personnel such as a sampling coordinator. The sampling coordinator is responsible for providing management support such as maintaining an orderly sampling process, providing instructions to sampling technicians regarding sampling locations, and fulfilling sample documentation requirements, thereby allowing sampling technicians to collect samples in an efficient manner.

8.3 Project Manager

The project manager is responsible for ensuring that project-specific requirements are communicated to the project team and for providing the materials, resources, and guidance necessary to perform the activities in accordance with the project plan and this POP. The project manager is also responsible for ensuring that proper arrangements have been made with the designated analytical laboratory. These arrangements include, but are not necessarily limited to, subcontractor agreements, analytical scheduling, and bottle/cooler orders. The project manager may delegate some of these responsibilities to other project staff.

9.0 References

Not applicable.

10.0 Revision History

Revision	Date	Changes
0	June 2010	Original POP

Figure 1. Chain of Custody Form

AECOM

CHAIN OF CUSTODY RECORD

Page ____ of ____

Client/Project Name:	Project Location:
Project Number:	Field Logbook No.:
Sampler (Print Name)/(Affiliation):	Chain of Custody Tape Nos.:
Signature:	Send Results/Report to: / TAT:

Analysis Requested

Container Type
P – Plastic
A – Amber Glass
G – Clear Glass
V – VOA Vial
O – Other
E – Encore

Preservation
1 – HCl, 4°
2 – H2SO4, 4°
3 – HNO3, 4°
4 – NaOH, 4°
5 – NaOH/ZnAc, 4°
6 – Na2S2O3, 4°
7 – 4°

Matrix Codes:
DW – Drinking Water
WW – Wastewater
GW – Groundwater
SW – Surface Water
ST – Storm Water
W – Water
S – Soil
SL – Sludge
SD – Sediment
SO – Solid
A – Air
L – Liquid
P – Product

Field Sample No./Identification	Date	Time	COMP	GRAB	Sample Container (Size/Mat'l)	Matrix	Preserv.	Field Filtered											Lab I.D.	Remarks

Relinquished by: (Print Name)/(Affiliation) Signature:	Date: Time:	Received by: (Print Name)/(Affiliation) Signature:	Date: Time:	Analytical Laboratory (Destination):
Relinquished by: (Print Name)/(Affiliation) Signature:	Date: Time:	Received by: (Print Name)/(Affiliation) Signature:	Date: Time:	
Relinquished by: (Print Name)/(Affiliation) Signature:	Date: Time:	Received by: (Print Name)/(Affiliation) Signature:	Date: Time:	Sample Shipped Via: UPS FedEx Courier Other / Temp blank Yes No

Serial No. _____

Figure 2. Chain of Custody Tape

№	Signature _____
	Date _____

AECOM

Project Operating Procedure

Monitoring Well Development

Procedure Number: 011

Revision No.: 0

Revision Date: June 2010

Robert Shoemaker, POP Author

Date: June 2010

Joanne Lynch, Project Manager

Date: April 2012

Annual review of this POP has been performed and the POP still reflects current practice.

Initials: _____ Date: _____

Initials: _____ Date: _____

Contents

1.0 Project Scope and applicability 1

2.0 Health and safety considerations 1

3.0 Interferences 2

4.0 Equipment and materials 2

5.0 Procedures 3

6.0 Quality assurance / quality control 7

7.0 Data and records management 7

8.0 Personnel qualifications and training 7

9.0 References 8

10.0 Revision History 8

List of Appendices

Appendix A Definitions

List of Figures

Figure 1 Recommended Surge Block Design

Figure 2 Well Development Record

1.0 Project Scope and applicability

1.1 Purpose and Applicability

This POP describes the methods used for developing newly installed monitoring wells and/or existing wells which may require redevelopment/rehabilitation. This POP is applicable to monitoring wells and/or small diameter recovery wells and piezometers.

Monitoring well development and/or redevelopment is necessary for several reasons:

- To improve/restore hydraulic conductivity of the surrounding formations as they have likely been disturbed during the drilling process, or may have become partially plugged with silt,
- To remove drilling fluids (water, mud), when used, from the borehole and surrounding formations, and
- To remove residual fines from well filter materials and reduce turbidity of groundwater, therefore, reducing the chance of chemical alteration of groundwater samples caused by suspended sediments.

Respective state or federal agency (regional offices) regulations may require specific types of equipment for use or variations in the indicated method of well development. Deviations from this POP to accommodate other regulatory requirements should be reviewed in advance of the field program, should be explained in the Work Plan, and must be documented in the field logbook when they occur.

1.2 General Principles

Well development generally involves withdrawal of an un-specified volume of water from a well using a pump, surge block or other suitable method such that, when completed effectively, the well is in good or restored hydraulic connection with the surrounding water bearing unit and is suitable for obtaining representative groundwater samples or for other testing purposes.

2.0 Health and safety considerations

Monitoring well development may involve chemical hazards associated with materials in the soil or aquifer being characterized and may involve physical hazards associated with use of well development equipment. When wells are to be installed and developed on hazardous waste investigation sites, a Health and Safety Plan must be prepared and approved by the Health and Safety Officer before field work commences. This plan must be approved by the project Health and Safety Officer before work commences, must be distributed to all field project personnel, and must be adhered to as field activities are performed.

3.0 Interferences

Well development performed with inappropriate techniques or improper procedures may lead to groundwater monitoring data that is not representative of the formation. Careful consideration should be given to the monitoring well development method selected, and the procedures should be followed as presented in this POP.

4.0 Equipment and materials

Well development can be performed using a variety of methods and equipment. The specific method chosen for development of any given well is governed by the purpose of the well, well diameter and materials, depth, accessibility, geologic conditions, static water level in the well, and type of contaminants present, if any.

The following list of equipment, each with their own particular application, may be used to develop and/or purge monitoring wells.

4.1 Bailer Purging

A bailer is used to purge silt-laden water from wells after using other devices such as a surge block. In some situations, the bailer can be used to develop a well by bailing and surging, often accompanied with pumping. A bailer should be used for purging in situations where the depth to static water is greater than 25 feet and/or where insufficient hydraulic head is available for use of other development methods.

4.2 Surge Block Development

Surge blocks are commercially available for use with Waterra™-type pumping systems or may be manufactured using a rubber or teflon "plunger" attached to a rod or pipe of sufficient length to reach the bottom of the well. Well drillers usually can provide surge blocks if requested. A recommended design is shown in Figure 1.

4.3 Pump Development

A pump is often necessary to remove large quantities of silt-laden ground water from a well after using the surge block. In some situations, the pump alone can be used to develop the well and remove the fines by overpumping. Since the purpose of well development is to remove suspended solids from a well and surrounding filter pack, the pump must be capable of moving some solids without damage. The preferred pump is a submersible pump which can be used in both shallow and deep ground water situations. A centrifugal pump may be used in shallow wells but will work only where the depth to static ground water is less than approximately 25 feet. Pumping may not be successful in low-yielding aquifer materials or in wells with insufficient hydraulic head.

4.4 Compressed Gas Development

Compressed gas, generally nitrogen from a tank or compressed air through a compressor, can be used to both surge and develop a monitoring well. The method works by injection of compressed gas at the bottom of the water column, driving sediment-laden water to the surface. Compressed gas can also be used for "jetting" - a process by which the gas is directed at the slots in the well screen to cause turbulence (thereby disturbing fine materials in the adjacent filter pack). Compressed gas is not limited by any depth range.

Since the compressed gas will be used to "lift" water from the monitoring well, provisions must be made for controlling the discharge from contaminated wells. This is generally accomplished by attaching a "tee" discharge to the top of the casing and providing drums to contain the discharged water. Gas-lifting should never be done in contaminated wells without providing a means to control discharge.

4.5 Other Required Materials:

- Well development records (Figure 2)
- Health and Safety equipment
- Equipment decontamination materials
- Water level indicator
- Water quality instrumentation: turbidity meter, pH, temperature, specific conductance meters, as required
- Field logbook/pen

5.0 Procedures

5.1 General Preparation

Well Records Review: Well completion diagrams should be reviewed to determine well construction characteristics. Formation characteristics should also be determined from review of available boring logs.

Site Preparation: Well development, similar to groundwater sampling, should be conducted in as clean an environment as possible. This usually requires, at a minimum, placing sheet plastic on the ground to provide a clean working area for development equipment.

IDW Containment: Provisions should be in place for collection and management of investigation-derived wastes (IDW), specifically well development water and miscellaneous expendable materials generated during the development process. The collection of IDW in drums or tanks may be required depending on project-specific requirements.

Water Level/Well Depth Measurement: The water level and well depth should be measured with a water level indicator and written on the well development record. This information is used to calculate the volume of standing water (i.e., the well volume) within the well.

Equipment Decontamination: All down-well equipment should be decontaminated prior to use in accordance with POP 009 Decontamination of Field Equipment.

Removal of Drilling Fluids: Drilling fluids such as mud or water, if used during the drilling and well installation process, should be removed during the well development procedure. It is recommended that a minimum of 1.5 times the volume of added fluid be removed from the well during development. Drilling muds should initially have been flushed from the drilling casing during the well installation procedure with water added during the flushing process. If the quantity of added fluid is not known or could not be reasonably estimated, removal of a minimum of 10 well volumes of water is recommended during the development procedure.

5.2 Development Procedures

5.2.1 Development Method Selection

The construction details of each well shall be used to define the most suitable method of well development. Some consideration should be given to the potential degree of contamination in each well as this will impact IDW containment requirements.

The criteria for selecting a well development method include well diameter, total well depth, static water depth, screen length, the likelihood and level of contamination, and characteristics of the geologic formation adjacent to the screened interval.

The limitations, if any, of a specific procedure are discussed within each of the following procedures.

5.2.2 General Water Quality Measurements

Measure and record water temperature, pH, specific conductance, and turbidity periodically during development using the available water quality instruments. These measurements will aid in determining whether well development is proceeding efficiently, will assist in identifying when well development is complete, will determine whether the development process is effective or not with any given well and, potentially, may identify well construction irregularities (i.e., grout in well, poor well screen slot-size selection). Water quality parameters should be checked a minimum of 3 to 5 times during the development process.

5.2.3 Bailer Procedure

- As stated previously, bailers shall preferably not be used for well development but may be used in combination with a surge block to remove silt-laden water from the well.
- When using a bailer to purge well water; select the appropriate bailer, then tie a length of bailer cord onto the end of it.

- Lower the bailer into the screened interval of the monitoring well. Silt, if present, will generally accumulate within the lower portions of the well screen.
- The bailer may be raised and lowered repeatedly in the screened interval to further simulate the action of a surge block and pull silt through the well screen.
- Remove the bailer from the well and empty it into the appropriate storage container.
- Continue surging/bailing the well until sediment-free water is obtained. If moderate to heavy siltation is still present, the surge block procedure should be repeated and followed again with bailing.
- Check water quality parameters periodically.

5.2.4 Surge Block Procedure

- A surge block effectively develops most monitoring wells. This device first forces water within the well through the well screen and out into the formation, and then pulls water back through the screen into the well along with fine soil particles. Surge blocks may be manufactured to meet the design criteria shown in the example (Figure 1) or may be purchased as an adaptor to fit commercially available well purging systems such as the Waterra system.
- Insert the surge block into the well and lower it slowly to the level of static water. Start the surge action slowly and gently above the well screen using the water column to transmit the surge action to the screened interval. A slow initial surging, using plunger strokes of approximately 3 feet, will allow material which is blocking the screen to separate and become suspended.
- After 5 to 10 plunger strokes, remove the surge block and purge the well using a pump or bailer. The returned water should be heavily laden with suspended silt and clay particles. Discharge the purged water into the appropriate storage container.
- Repeat the process. As development continues, slowly increase the depth of surging to the bottom of the well screen. For monitoring wells with long screens (greater than 10 feet) surging should be undertaken along the entire screen length in short intervals (2 to 3 feet) at a time. Continue this cycle of surging and purging until the water yielded by the well is free of visible suspended material.
- Check water quality parameters periodically.

5.2.5 Pump Procedure

- Well development using only a pump is most effective in monitoring wells that will yield water continuously. Theoretically, pumping will increase the hydraulic gradient and velocity of groundwater near the well by drawing the water level down. The increased velocity will move residual fine soil particles into the well and clear the well screen of this material. Effective development cannot be accomplished if the pump has to be shut off to allow the well to recharge.

- When using a submersible pump or surface pump, set the intake of the pump or intake line in the center of the screened interval of the monitoring well.
- Pump a minimum of three well volumes of water from the well and raise and lower the pump line through the screened interval to remove any silt/laden water.
- Continue pumping water from the well until sediment-free water is obtained. This method may be combined with the manual surge block method if well yield is not rapid enough to extract silt from the surrounding formations.
- Check water quality parameters periodically.

5.2.6 Compressed Gas Procedure

Although the equipment used to develop a well using this method is more difficult to obtain and use, well development using compressed gas is considered to be a very effective method. This method is also not limited by well depth, well diameter, or depth to static water. Caution must be exercised, however, in highly permeable formations not to inject gas into the formation. Drilling subcontractors will often provide the necessary materials as well as perform this method, if requested. When using a compressor, an oil-less compressor should be used, or an oil trap/filter should be placed on the air discharge line which enters the well.

Lower the gas line into the well, setting it near the bottom of the screened interval. Install the discharge control equipment (i.e., tee fitting) at the well head.

Set the gas flow rate to allow continuous discharge of water from the well.

At intervals during gas-lifting, especially when the discharge begins to contain less suspended material , shut off the air flow and allow the water in the well to backflush through the screened interval to disturb any bridging that may have occurred. Re-establish the gas flow when the water level in the well has returned to the pre-development level.

Continue gas-lifting and/or jetting until the discharged water is free from suspended material.

Check water quality parameters periodically.

5.2.7 Special Considerations for Wells in Low-Permeability Formations

Wells installed in low-permeability formations may be difficult to develop due to the slow rate of recharge into the well resulting in the well purging dry before proper well development can be achieved. When developing wells under these circumstances, the addition of potable water to the well during development to maintain a sufficient well volume should be considered. Approval from all appropriate regulatory agencies, including permitting requirements, must be obtained prior to implementing this procedure modification. If implemented, the following must be followed:

- The well development record must document that the addition of potable water is being used to aid in the development of the well and the justification for doing so.
- The volume of water added to the well must be documented.
- A minimum of 1.5 times the volume of water added to the well must be purged from the well. The total volume of water purged should be recorded on the well development record to document that this has been performed.

6.0 Quality assurance / quality control

Field project personnel should follow specific quality assurance guidelines as outlined in the Work Plan and/or Quality Assurance Project Plan (QAPP). The plan should indicate the preferred method of well development at a particular site based on project objectives, aquifer conditions, and agency requirements. Specific well performance criteria such as low turbidity values to be achieved following well development should also be specified as well as any requirements for collection/containerization and disposal of well development water.

A well has been successfully developed when one or more of the following criteria are met:

- The sediment load in the well has been eliminated or greatly reduced. Regulatory requirements may be in place which state that water turbidity values ranging from 5 to 50 NTU must be achieved at the end of the development procedure. Use of a turbidity meter is required during the well development procedure to measure water turbidity if meeting a specific turbidity value is required by the regulations. Attaining low turbidity values in fine-grained formations may be difficult to achieve.
- Permeability tests yield repeatable hydraulic conductivity values.

7.0 Data and records management

The Monitoring Well Development Record (Figure 2) will be completed by the geologist or hydrogeologist conducting the development. In addition, a field logbook should be maintained documenting any problems or unusual conditions which may have occurred during the development process.

8.0 Personnel qualifications and training

Well development procedures vary in complexity. It is recommended that initial development attempts be supervised by more experienced personnel. Field personnel should be health and safety certified

as specified by OSHA (29 CFR 1910.120(e)(3)(i)) to work on sites where hazardous waste materials are considered to be present.

9.0 References

Standard References for Monitoring Wells, Massachusetts Department of Environmental Protection, WSC-310-91, 1991.

POP 009 Decontamination of Field Equipment

10.0 Revision History

Revision	Date	Changes
0	June 2010	Original POP

APPENDIX A: DEFINITIONS

Bridging: A condition within the filter pack outside the well screen whereby the smaller particles are wedged together in a manner that causes blockage of pore spaces.

Hydraulic Conductivity: a characteristic property of aquifer materials which describes the permeability of the material with respect to flow of water.

Hydraulic Connection: A properly installed and developed monitoring well should have good hydraulic connection with the aquifer. The well screen and filter material should not provide any restriction to the flow of water from the aquifer into the well.

Permeability Test: Used to determine the hydraulic conductivity of the aquifer formation near a well screen. Generally conducted by displacing the water level in a well and monitoring the rate of recovery of the water level as it returns to equilibrium. Various methods of analysis are available to calculate the hydraulic conductivity from these data.

Static Water Level: The water level in a well that represents an equilibrium or stabilized condition, usually with respect to atmospheric conditions in the case of monitoring wells.

Well Surging: That process of moving water in and out of a well screen to remove fine sand, silt and clay size particles from the adjacent formation.

Well Purging: The process of removing standing water from a well to allow surrounding formation water to enter the well.

Well Screen: That portion of the well casing material that is perforated in some manner so as to provide a hydraulic connection to the aquifer. The perforated, or slotted, portion of a well is also known as the screened interval.

Figure 1. Recommended Surge Block Design

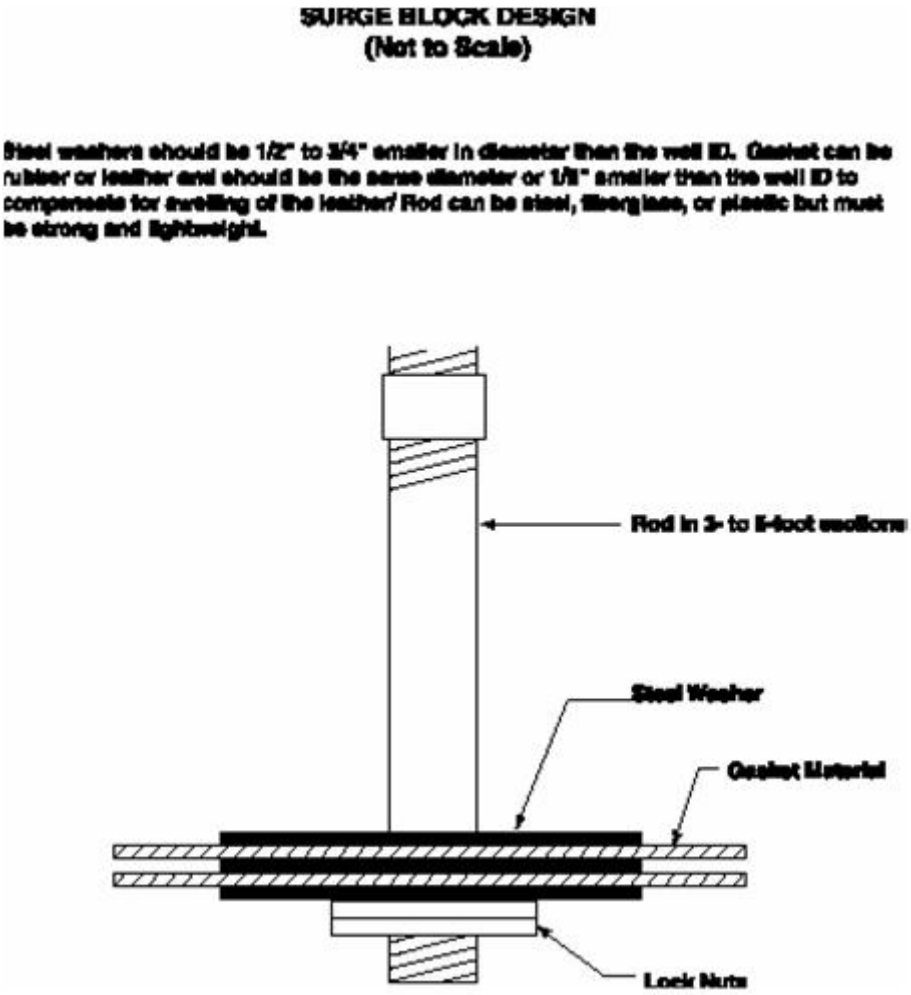

Figure 2. Well Development Record

Well/Piez. ID:

Well/Piezometer Development Record

Client: _____

Project No: _____ Date: _____ Developer: _____

Site Location: _____

Well/Piezometer Data

Well ☐ Piezometer ☐ Diameter _____ Material _____

Measuring Point Description _____ Geology at Screen Interval (if known) _____

Depth to Top of Screen (ft.) _____

Depth to Bottom of Screen (ft.) _____ Time of Water Level Measurement _____

Total Well Depth (ft.) _____ Calculate Purge Volume (gal.) _____

Depth to Static Water Level (ft.) _____ Disposal Method _____

Headspace _____

Original Well Development ☐ Redevelopment ☐ Date of Original Development _____

DEVELOPMENT METHOD _____

PURGE METHOD _____

Time	Total Volume Purged (gal.)	Flow Rate (gpm)	Turbidity (NTU)	Color	pH	Temp	Other

ACCEPTANCE CRITERIA (from workplan)
Minimum Purge Volume Required _____ gallons
Maximum Turbidity Allowed _____ NTUs
Stabilization of parameters _____%

	Yes	No	N/A
Has required volume been removed	☐	☐	☐
Has required turbidity been reached	☐	☐	☐
Has parameters stabilized	☐	☐	☐

If no or N/A explain below:

_____

Signature _____ Date: _____

AECOM

Project Operating Procedure

Calibration and Operations of the LaMotte 2020 Turbidimeter

Procedure Number: 012

Revision No.: 0

Revision Date: June 2010

Robert Shoemaker, POP Author

Date: June 2010

Joanne Lynch, Project Manager

Date: April 2012

Annual review of this SOP has been performed and the SOP still reflects current practice.

Initials: _____ Date: _____

Initials: _____ Date: _____

J:\Indl_Service\Project Files\BASF-0760\Cranston RI\7_Deliverables\12. Supplemental RI\AD\Appendix A\BASF POP 012 Calibration & Operation of Lamotte 2020

Contents

1.0 Project Scope and applicability 1

2.0 Health and safety considerations 1

3.0 Interferences 3

4.0 Equipment and materials 4

5.0 Procedures 4

6.0 Troubleshooting and Maintenance 8

7.0 Quality assurance / quality control 8

8.0 Data and records management 9

9.0 Personnel qualifications and training 9

10.0 References 9

11.0 Revision History 10

List of Attachments

Attachment A Turbidity Calibration Log Sheet

Attachment B LaMotte 2020 Turbidimeter Instruction Manual

List of Figures

Figure 2-1 The LaMotte 2020 Turbidimeter

Figure 2-1 How the LaMotte 2020 measures turbidity

Figure 5-1 Aligning the Index Arrows on the Turbidity Tube and the LaMotte 2020 Turbidimeter

Project Operating Procedure

Calibration and Operation of the LaMotte 2020 Turbidimeter

1.0 Project Scope and applicability

This procedure is applicable to the field measurement of turbidity in groundwater, drinking water, or surface water using the LaMotte 2020 turbidimeter. Turbidity is an expression of the optical property that causes light to be scattered or absorbed rather than transmitted in straight lines through a sample (the higher the intensity of scattered light, the higher the turbidity). Turbidity in water is caused by the presence of suspended matter such as clay, silt, finely divided organic and inorganic material, and microscopic organisms. Turbidity should not be confused with color, since a dark colored water can still be clear and not turbid.

The LaMotte 2020 turbidimeter is a portable, microprocessor controlled Nephelometer. The LaMotte 2020 turbidimeter measures scattered light in the sample at 90 degrees from the light source. A reference beam passes through the sample and is measured at 180 degrees from the light source. The ratio of these two readings is electronically converted to a turbidity measurement in nephelometric turbidity units (NTU). The light source for the LaMotte 2020 turbidimeter is a tungsten incandescent light bulb operated at 2,800 degrees Kelvin, and the light is detected by two silicon photo diodes (one at 90 degrees from the light source and one at 180 degrees from the light source). The multi-detector optical configuration assures long term stability and minimizes stray light and color interferences. All readings are determined by the process of signal averaging over a five second period, minimizing fluctuations in readings attributed to large particles and enabling rapid, repeatable measurements. A picture of the LaMotte 2020 turbidimeter is presented as Figure 2-1. A diagram illustrating how the LaMotte 2020 turbidimeter measures turbidity is presented as Figure 2-2.

The LaMotte 2020 turbidimeter is pre-calibrated by the manufacturer to a range of 0 to 1,100 NTU with AMCO™ primary standards. Recalibration of the LaMotte 2020 is not required by the user. However, a procedure to standardize the calibration is performed to obtain the most accurate readings over a narrow range using two AMCO™ standards of 1.00 NTU and 10.0 NTU, which are supplied with the LaMotte 2020.

For operation of the LaMotte 2020 turbidimeter, a sample is collected into the LaMotte 2020 turbidity vial. The vial is placed into the LaMotte 2020 sample chamber, the sample chamber is closed, and the READ button is pressed. A walking dash "—" is displayed while the LaMotte 2020 turbidimeter analyzes the sample. After five seconds, the turbidity in NTU is displayed.

2.0 Health and safety considerations

Refer to the site-specific health and safety plan for cautions and health and safety procedures associated with the samples to be analyzed.

Caution should be taken when working with all chemicals. Refer to the Material Safety Data Sheets (MSDSs) for the chemicals to be used. The MSDSs are located in the site-specific health and safety plan.

Figure 2-1. The LaMotte 2020 Turbidimeter

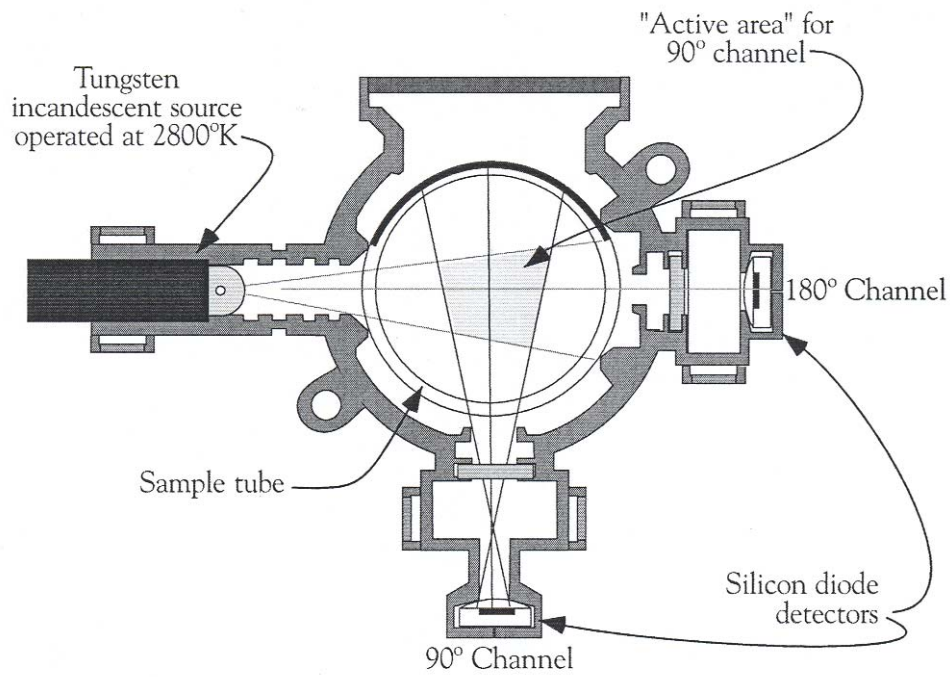

Figure 2-2. How the LaMotte 2020 measures turbidity

The LaMotte 2020 turbidimeter should not be stored or used in a wet or corrosive environment. Care should be taken to prevent water from wet turbidity tubes from entering the turbidimeter light chamber. NEVER PUT WET TURBIDITY TUBES IN THE TURBIDIMETER.

If operating the LaMotte 2020 turbidimeter in an environment where the temperature is less than or equal to 0° C, be sure to remove the turbidity standards from the LaMotte 2020 turbidimeter case, as the standards will freeze and crack the turbidity vials if exposed to temperatures less than or equal to 0° C.

3.0 Interferences

The presence of floating debris, coarse sediments, or air bubbles will cause high readings.

The presence of light absorbing materials (such as activated carbon) will cause low readings.

Excessive color in a sample will absorb light and cause high readings. If the turbidity readings appear to be biased high due to excessive color in the sample, use professional judgment when interpreting the turbidity results. This should be noted on the monitoring well worksheet or the field logbook.

Extreme care should be taken when handling the turbidity standards or the turbidity vial, as surface scratches or finger smudges will cause analytical errors. Handle these items by the top only.

Do not shake or freeze samples or turbidity standards.

Do not operate the LaMotte 2020 turbidimeter near electric motors. The electric field created by electric motors can affect turbidity readings on the LaMotte 2020 turbidimeter.

The LaMotte 2020 turbidimeter should be placed on a surface free from vibration. Vibrations can cause high turbidity readings on the LaMotte 2020 turbidimeter.

4.0 Equipment and materials

- LaMotte 2020 turbidimeter
- LaMotte 2020 turbidimeter turbidity tubes
- AMCO™ 1.00 NTU and 10.0 NTU turbidity standards
- Kimwipes® Absorbent Wipes
- Backup 9-volt battery
- Deionized, ultra-filtered (DIUF) water
- Turbidity free water
- ¾” circular stickers

5.0 Procedures

5.1 Setting the Operating Mode

The LaMotte 2020 turbidity meter has two operating modes: standard operating mode and EPA mode. The standard operating mode displays the measured turbidity to the full resolution of the instrument. The EPA mode displays the measured turbidity rounded to the reporting requirements of the EPA and Standard Methods compliance monitoring programs. Operating in EPA mode eliminates the need for the user to manually round off turbidity results according to EPA specifications. The EPA requires these reporting requirements because it recognizes the inherent accuracy limitations of turbidity measurements within the specified ranges.

The LaMotte 2020 turbidity meter can only be switched from one mode to the other while turning the instrument on from the off state. The LaMotte 2020 turbidity meter will remain in which ever mode it was last used, even if the meter has been turned off. To switch from one mode to the other, perform the following procedure:

1. Turn off the LaMotte 2020 turbidimeter if it is on.
2. Press the CAL button and hold it down while pressing the READ button to turn the LaMotte 2020 turbidimeter on.
3. The LaMotte 2020 turbidimeter will come on in the opposite mode than it was in previously. If the LaMotte 2020 is in EPA mode, an up arrow (▲) will be visible in the upper left hand corner of the instrument display.

5.2 Calibration of the Turbidity Tubes

If the LaMotte 2020 is supplied by a rental agency (e.g. U.S. Environmental, Pine Environmental), calibration of the turbidity tubes is usually not needed, as this procedure is performed by the rental agency and the turbidity tube with the lowest reading is usually supplied with the turbidimeter. If the LaMotte 2020 turbimeter is purchased, or if this step was not performed by the rental agency and more than one turbidity vial is provided with the LaMotte 2020, perform the following procedure.

Fill each turbidity tube with DIUF water.

Analyze and record the turbidity reading for each turbidity tube according to the procedures presented in Section 5.4.

Mark the tube with the lowest turbidity reading by placing a ¾" circular sticker on the top of the lid of the tube and writing an "R" on the sticker for reference tube.

Follow the calibration procedures presented in Section 5.3, using the reference turbidity tube and the 1.00 NTU or 10.0 NTU AMCO™ standard.

Fill the remaining turbidity tubes with the same AMCO™ standard as in the reference turbidity tube.

Analyze and record the turbidity reading for each tube according to the procedures presented in Section 5.4.

The difference between the true value of the AMCO™ standard (1.00 NTU or 10.0 NTU) and the value produced when the turbidity tube with the AMCO™ standard is analyzed is the correction factor for that tube. Place a ¾' circular sticker on the top of the lid of the turbidity tube and write the correction factor on the sticker. This correction factor should be used when comparing results from different tubes.

In most cases, comparison of results from different tubes is not necessary, and only steps 5.2.1 through 5.2.3 need to be performed in order to determine which turbidity tube produces the lowest reading.

5.3 Calibration of the LaMotte 2020 Turbidimeter

Select the AMCO™ standard (1.00 NTU or 10.0 NTU) in the range of the samples to be tested. In most cases this will be the 10.0 NTU standard.

Fill the reference turbidity tube (see section 5.2) with the standard, cap the reference turbidity tube, and wipe the reference turbidity tube with a Kimwipe®. NOTE: If the LaMotte 2020 Turbidimeter is provided by a rental agency, the rental agency will most likely supply the two AMCO™ standards in capped turbidity tubes that are dedicated to each standard. Therefore, pouring of the AMCO™ standard into the reference turbidity tube is not necessary.

Open the lid on the LaMotte 2020 turbidimeter. Align the indexing arrow on the turbidity tube with the indexing arrow just below the sample chamber on the LaMotte 2020 turbidimeter (see Figure 5-1), and insert the turbidity tube into the sample chamber.

Close the lid on the LaMotte 2020 turbidimeter and press the READ button. The turbidity in NTU will be displayed in five seconds. If the displayed value is within +/- 0.50 NTU of the true value of the AMCO™ standard, record the reading on the turbidity calibration log sheet, and indicate in the comments column of the turbidity calibration log sheet that the reading was obtained through a calibration check, and the LaMotte 2020 turbidimeter did not require calibration. If the displayed value is not within +/- 0.50 NTU of the true value of the AMCO™ standard, continue with the calibration procedure.

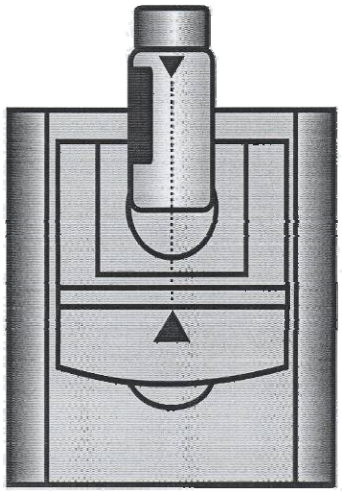

Figure 5-1. Aligning the Index Arrows on the Turbidity Tube and the LaMotte 2020 Turbidimeter

Push the CAL button for five seconds until CAL is displayed on the LaMotte 2020 turbidimeter, and release the CAL button. The display will flash the reading obtained in step 5.3.4.

Adjust the display with the ▲ or ▼ buttons until the true value of the AMCO™ standard is displayed on the LaMotte 2020 turbidimeter.

Push the CAL button again to memorize the calibration. The LaMotte 2020 turbidimeter display will stop flashing, indicating that calibration is complete. Press the READ button again to verify that the calibration is acceptable. If the reading is not within +/- 0.50 NTU of the true value of the AMCO™ standard, the LaMotte 2020 turbidimeter must be recalibrated by repeating steps 5.3.1 through 5.3.7. Once an acceptable calibration check has been performed, record the reading on the turbidity calibration log sheet, and indicate in the comments column of the turbidity calibration log sheet that the reading was a calibration check obtained following calibration.

5.4 Sample Analysis

Rinse an empty turbidity tube with a portion of the sample, and shake out the excess sample water.

Fill the reference turbidity tube to the neck. The turbidity tube should be filled in a manner such that the sample water is entering the turbidity tube down the side of the turbidity tube to avoid creating bubbles.

Cap the turbidity tube and wipe the turbidity tube dry with a clean Kimwipe®.

Gently mix the sample by inverting the turbidity tube. Be careful not to introduce any bubbles into the turbidity vial.

Open the lid on the LaMotte 2020 turbidimeter. Align the indexing arrow on the turbidity tube with the indexing arrow just below the sample chamber on the LaMotte 2020 turbidimeter (see Figure 5-1), and insert the turbidity tube into the sample chamber.

Close the lid on the LaMotte 2020 turbidimeter and press the READ button. The turbidity in NTU will be displayed in five seconds.

Use a graduated cylinder and turbidity free water to dilute any sample that is over 1,100 NTU, such that the reading falls within the LaMotte 2020 turbidimeter's calibrated range (0 to 1,100 NTU). Calculate final turbidity according to the following formula:

Turbidity (NTU) = sample_reading x dilution_factor

Record the results on the monitoring well worksheet or the field logbook.

The LaMotte 2020 turbidimeter will turn off automatically two minutes after the last button push. To turn the LaMotte 2020 turbidimeter off manually, press and hold the READ button for at least one second. Release the READ button when "OFF" is displayed.

6.0 Troubleshooting and Maintenance

The LaMotte 2020 turbidimeter is not designed for field service with the exception of battery replacement. See the Instructions Manual presented in Attachment B for detailed descriptions of troubleshooting and maintenance procedures. Some common troubleshooting and maintenance procedures are presented below.

6.1 "BAT" is displayed – The battery is low and needs to be changed.

Open the battery compartment lid on the bottom of the LaMotte 2020 turbidimeter

Remove the 9-volt battery from the battery compartment, disconnect and remove the 9-volt battery from the polarized plug

Carefully connect a new 9-volt battery to the polarized plug and insert it into the battery compartment.

Close the battery compartment lid.

6.2 "ER1" is displayed – The battery is very low and needs to be changed immediately.

Operating the LaMotte 2020 turbidimeter with a very low battery could result in permanent erasure of the factory calibration. Change the battery according to the procedures outlined in 6.1 immediately.

6.3 "ER2" is displayed – The sample result is above the calibration range (>1,100 NTU).

Dilute the sample with turbidity free water and reanalyze.

6.4 "ER3" is displayed – The tungsten incandescent light bulb is misaligned or burnt out.

Call LaMotte for procedures on returning the instrument to the manufacturer, or return the instrument to the rental agency.

7.0 Quality assurance / quality control

The LaMotte 2020 turbidimeter will be calibrated at the start of each day of sample analysis according to the procedures described in Section 5.3.

If the LaMotte 2020 turbidimeter is being used in fieldwork (e.g. groundwater sampling or surface water sampling), the calibration will be checked each day prior to calibration, immediately after calibration (if calibration is required as described in Section 5.3), and at the end of each day using the same AMCO™ standard as was used for calibration. The reading must be within +/- 0.50 NTU of the true value. If this criteria is not met, the source of the problem must be identified and corrected, or another turbidimeter must be used.

If the LaMotte 2020 turbidimeter is being used in a field laboratory setting (e.g. pilot groundwater treatability study), the calibration will be checked each day prior to calibration, immediately after calibration (if calibration is required as described in Section 5.3), at the midpoint of each day, and at the end of each day using the same AMCO™ standard as was used for calibration. The reading must be within +/- 0.50 NTU of the true value. If this criteria is not met, the source of the problem must be identified and corrected, or another turbidimeter must be used.

8.0 Data and records management

Calibration logsheets shall be used to document the details of instrument calibration and calibration checks.

The site logbook should be used to note when instrument calibration and instrument calibration checks were conducted, and should reference the calibration logsheets for details.

Readings measured by instruments that are subsequently found to be outside of criteria during the calibration check shall be documented on the sampling worksheet used to document the sample collection.

9.0 Personnel qualifications and training

All field samplers are required to take the 40-hour OSHA Hazardous Waste Operations training course and annual 8-hour refresher training prior to engaging in any field collection activities. Prior to the implementation of this SOP, all field samplers will be instructed by a person experienced with the LaMotte 2020 turbidimeter and this SOP. All field samplers must demonstrate to the field team leader and/or Project Chemist the proper procedures for calibration and operation of the LaMotte 2020 turbidimeter prior to sample analysis.

10.0 References

LaMotte 2020 Turbidimeter Instruction Manual. LaMotte Company. August 2004.

11.0 Revision History

Revision	Date	Changes
0	June 2010	Original POP

Attachment A – Turbidity Calibration Log Sheet

Turbidity Meter Calibration Log

Site Name: _____ Instrument: _____

Field Activities: _____ Model No.: _____

Fieldwork Dates: _____ ID No.: _____

Date	Time	Initials	Standard #1		Standard #2		Comments
			Value	Reading	Value	Reading	

Record information for one instrument per sheet.
One sheet can be used on multiple days on the same site.
Use pen only, cross out with a single line.

Attachment B – LaMotte 2020 Turbidimeter Instruction Manual

AECOM

Project Operating Procedure

Procedures for Passive Sampling of Air Using SUMMA Canisters

Procedure Number: 013

Revision No.: 1

Revision Date: September 2010

Robert Shoemaker, POP Author

Date: June 2010

Joanne Lynch, Project Manager

Date: April 2012

Annual review of this POP has been performed and the POP still reflects current practice.

Initials: _____ Date: _____

Initials: _____ Date: _____

Contents

1.0 Scope and Applicability 1

2.0 Health and Safety Considerations 1

3.0 Interferences 1

4.0 Equipment and Materials 2

5.0 Procedures 3

6.0 Quality Assurance / Quality Control 5

7.0 Data and Records Management 6

8.0 Personnel Qualifications and Training 6

9.0 References 7

10.0 Revision History 7

Project Operating Procedure

Procedures for Passive Sampling of Air Using SUMMA Canisters

1.0 Scope and Applicability

This project operating procedure (POP) describes the procedure for passively collecting air samples in SUMMA stainless steel canisters for the analysis of volatile organic compounds (VOCs). This method is applicable for whole-air sampling of ambient air, soil/landfill gas, or stationary sources with compounds of interest measured at the parts per billion by volume (ppbv) level. The target compounds that can be analyzed from samples collected by this method generally have a vapor pressure greater than 0.1 torr at 25 ºC and 760 mm Hg.

The procedure describes the collection of passive (i.e. without the use of a pump) samples. The samples can be taken as grab sample (over a short period of time) or as integrated samples which are taken over a longer period.

2.0 Health and Safety Considerations

2.1 The health and safety considerations for the work associated with this POP, including both potential physical and chemical hazards, will be addressed in the site specific Health and Safety Plan (HASP). In the absence of a site-specific HASP, work will be conducted according to the AECOM Health and Safety Policy and Procedures Manual and/or direction from the Regional Health and Safety Manager.

2.2 Canisters are under vacuum, and should not be dented or punctured. They should be stored in a cool, dry place out of direct sunlight. They should always be placed in their shipping boxes during transport and storage.

3.0 Interferences

3.1 Contamination may occur in the sampling system if canisters are not properly cleaned before use. Additionally, all other sampling equipment (e.g., flow controllers and sample lines) should be thoroughly cleaned.

3.2 Particulates may clog or foul the mass flow controller or critical orifice and result in incomplete and/or inaccurate sampling. Particulate filters must be used (see section 4.2).

3.3 Moisture in the sample or liquid in the canister will adversely affect the recovery of polar compounds. Sampling ports should be purged prior to sampling to remove any entrained liquid or water vapor.

3.4 Leaks in the sampling train will lead to incomplete and/or inaccurate sampling. The sample could become diluted or the sample could leak out. All valves and fittings must be tightened

appropriately. In general, Swagelok© fittings are finger-tightened plus ¼ turn with a wrench. Do not overtighten. When properly tightened, the pieces cannot be rotated by hand.

3.5 The sampling train should be kept out of direct sunlight to avoid temperature changes and drifting of the sample flow.

3.6 To further reduce unnecessary contamination during grab sampling, non-essential personnel should be kept away from the canister and the sampler should avoid breathing near the canister inlet during the actual sampling.

4.0 Equipment and Materials

4.1 SUMMA Canisters, 1 Liter (L) or 6L – the canisters are supplied by the analytical laboratory, already pre-cleaned and evacuated (SUMMA refers to the process by which the inside of the canister is made chemically inert). Each canister may be individually certified for the target compound of interest or may be "batch" certified. The degree of certification will depend on the end use of the data. Air sampling used for risk assessment requires individually certified canisters. For routine monitoring, "batch" certified canisters may be appropriate. Canisters designated for blanks (field or ambient) should be certified to the same degree as the associated field samples. Each canister will have a valve and inlet cap.

4.2 Particulate filter – the filter prevents particulate material from fouling or clogging the valve or flow controller. Typically, a 5 micron filter is used for 1L canisters and a 7 micron filter is used for 6L canisters. The filter may be built into the flow controller by the laboratory providing the equipment.

4.3 Vacuum gauge – the gauge is used to measure the initial vacuum of the canister as well as the final vacuum upon completion of sampling. It is also used to monitor the progress of sampling as the vacuum in the canister will decrease as the canister fills up. The gauge may be a separate item or may be integrated as part of the valve mechanism.

4.4 Flow controllers – regulate the rate at which air enters the canister. There are two types:

4.4.1 Mass flow controller – actively adjusts the sample flow to provide a constant mass through the valve. As the canister fills up and the differential pressure decreases, the sample flow into the canister would tend to decrease. The mass flow controller responds by opening up its diaphragm to allow more sample to flow through.

4.4.2 Critical orifice device – used most commonly. It has a built-in vacuum gauge and is recommended for field sampling. The critical orifice is calibrated by the laboratory to provide a rate at which desired volume of air will be collected over the sampling period, according to the following formula:

flow rate (mL/min) = target fill volume (mL)/sampling interval (min)

Thus, to collect 5 Liters of air over a one hour sampling interval, a flow rate of 83.3 mL/min is used. It is expected that samples will be collected at 100-200 mL/min.

4.5 Air, ultra zero – for use in preparing equipment blanks

4.6 Tubing and Fittings – as required for sampling.

4.6.1 Tubing – only chromatographic-grade stainless steel should be used.

4.6.2 Fittings – the nuts, ferrules, and other fittings should be chromatographic-grade, ¼ inch Swagelok©

4.7 Wrenches – two wrenches are needed to tighten the fittings on the tubing, valves and canisters. These are ¼ inch Swagelok© fittings, requiring 9/16 inch open ended wrenches.

5.0 Procedures

NOTE: When sampling a process under pressure or vacuum, the effects on the sample must be considered. A process under pressure will fill the canister faster and it is possible to pressurize the canister. (If a canister becomes pressurized, excess pressure must be bled off by temporarily opening the valve.) When sampling a process under vacuum, the canister fills more slowly and it may be difficult to fill the canister with the desired amount of sample.

NOTE: Actual field conditions may require minor modifications to these procedures.

5.1 Prior to sampling

5.1.1 Verify contents of the shipped package (e.g., chain-of-custody, canister, particulate filter, gauge or flow controller)

5.1.2 Verify that gauge is working properly. If the gauge does not read “zero”, it may need to be equilibrated by cracking the rubber seal at the top of the gauge. If this does not reset the indicator, the gauge may be damaged and is unusable.

5.1.3 Record the initial vacuum of the canister. Canisters for passive sampling will be under a vacuum of 30 in. Hg.

5.1.3.1 Confirm that valve is closed (knob should already be tightened clockwise)

5.1.3.2 Remove the brass cap.

5.1.3.3 Attach gauge.

5.1.3.4 Attach brass cap to side of gauge tee fitting.

5.1.3.5 Open and close valve quickly (a few seconds).

5.1.3.6 Read vacuum on the gauge. If the vacuum is less than 28 in. Hg, do not use the canister.

5.1.3.7 Record gauge reading on “Initial Vacuum” column of chain-of-custody.

5.1.3.8 Verify that canister valve is closed then remove gauge.

5.1.3.9 Replace the brass cap.

5.2 Sampling

5.2.1 Remove brass cap.

5.2.2 For grab samples only:

5.2.2.1 Attach particulate filter directly to canister.

5.2.2.2 Open valve 1/2 turn, allowing the sample into the canister (a 6L canister will normally take about 16 sec to fill). As the canister nears capacity, the sound of air rushing into the canister will change pitch.

NOTE: A grab sample can be collected either by allowing the canister to reach ambient conditions or by leaving some residual vacuum in the canister (e.g., 5 in Hg). Leaving residual vacuum is preferable. In either case, the final vacuum should be noted on the "Final Vacuum" column on the chain-of-custody. This will enable the laboratory to compare the final vacuum with the receipt vacuum (i.e., the vacuum measured upon arrival at the laboratory) to ensure sample integrity.

5.2.3 For integrated samples only

5.2.3.1 Attach the flow controller to the canister and attach the filter to the flow controller. Make sure that the sample will flow through the filter in the proper direction. Some laboratories supplying the equipment may include the filter as part of the flow controller, and not as a separate piece of hardware.

5.2.3.2 If necessary, attach the canister assembly to the sampling port. The sampling port should be purged of liquid or water vapor prior to connecting the assembly. Do not overtighten the connectors and fittings.

5.2.3.3 Open valve 1/2 turn, allowing the sample to start flowing into the canister. Periodically monitor the progress of the sampling during the sampling interval. The volume of air sampled has a linear relationship to the canister vacuum. Thus halfway through the sampling interval, half of the sample will have collected (2.5 Liters) and the vacuum gauge should read 17 in Hg (halfway between 29 in Hg and 5 in Hg).

NOTE: Different from a grab sample canister, an integrated sample canister should not be allowed to reach ambient pressure. The flow controller is calibrated to leave approximately 5 in Hg residual vacuum in the canister and because of normal fluctuations during sampling the final vacuum will be between 2-10 in Hg. A residual vacuum less than 1 in Hg indicates that the canister may have come to ambient conditions before the completion of the sampling interval. See Section 6.5 for the effects of residual vacuum on integrated sampling.

5.2.4 At the conclusion of sampling, close valve by hand tightening knob clockwise.

5.2.5 Verify and record final vacuum of canister (repeat steps used to verify initial vacuum).

5.3 Post Sampling

5.3.1 Replace brass cap.

5.3.2 Fill out canister sample tag. The canister number, initial vacuum and final vacuum must be recorded on the sample tag and chain of custody.

5.3.3 Return canister to box and place accessories (e.g. gauges, filters) in packaging provided.

5.3.4 Fill out chain-of-custody and relinquish samples properly. The canister number, initial vacuum and final vacuum must be recorded.

5.3.5 Tape box shut and affix custody seal (if applicable) across flap.

5.4 Ship or transport accordingly to meet method holding times.

6.0 Quality Assurance / Quality Control

6.1 Sample Preservation and Holding Time – The holding time for whole air samples is 14 days from collection to analysis. Although the TO-15 method states that most compounds can be adequately recovered up to 30 days, recovery of polar compounds is significantly reduced after 14 days.

6.2 SUMMA Canister Holding Time – Canisters must be analyzed with 30 days of preparation (evacuation by the laboratory). Care must be taken to ensure that the samples can be collected and analyzed within this time frame. If the sampling event is postponed once the canisters are in-house or in the field, it may be necessary to return them and request freshly evacuated canisters in order to meet the 30 day schedule.

6.3 Contamination – Contamination may be monitored through the use of field blanks and ambient blank samples. The collection of one blank per sampling event is recommended.

6.3.1 Field Blanks are prepared by passing ultra zero air through a clean regulator and tubing into a certified canister. It can provide information about the decontamination procedures used on the tubing in the field.

6.3.2 Ambient Blanks are collected over the same duration as, and are used in conjunction with, integrated samples to assess background conditions around the sampling site.

6.4 Precision and Accuracy – Precision can be assessed through the use of field duplicates which are prepared by connecting the canisters to a “tee” and filling them simultaneously. Accuracy can be assessed through the use of performance evaluation samples or certified gas standards.

6.5 Affects of Residual Vacuum

6.5.1 Greater than 5 in Hg – Less than 5 Liters of sample was collected. The sample will be diluted during analysis and the reporting limits will be elevated.

6.5.2 Less than 5 in Hg – The initial flow rate was high and the sample results will be biased towards the first portion of the sampling interval.

6.5.3 Near ambient – The canister is “full” and the sampler will not be able to determine the actual sampling interval (when the canister became “full”).

6.6 Reporting Limits – Reporting limits are calculated from the method reporting limit adjusted for the effects of sample volume, residual vacuum and dilutions as shown in Table 1.

Table 1: Effect of Vacuum, Volume, and Dilution on Reporting Limits

Final Vacuum (in. Hg)	0	2.5	5	7.5	10	12.5	15	17.5	20
Volume Sampled (L)	6	5.5	5	4.5	4	3.5	3	2.5	2
Sample Dilution Factor	1.34	1.46	1.61	1.79	2.01	2.30	2.68	3.22	4.02

Source: Air Toxics Limited

Reporting Limit = (method reporting limit) x (sample dilution factor) x (analysis dilution factor)[1]

[1] - The analysis dilution factor is a ratio of the pressurization required for analysis and the vacuum recorded at sample receipt.

7.0 Data and Records Management

7.1 The chain of custody form will be completed following sample collection describing all pertinent sample information, site information, intended analyses, etc. This form must be completed properly and the intended recipients must receive their respective copies.

7.2 All data and information (e.g., sample collection method used) must be documented on field data sheets and/or site log books with permanent ink. Data recorded will include the following:

- weather conditions (humidity has an effect on compound recoveries)
- canister and flow controller type and serial number
- start and stop times (for integrated sampling)
- deviations from the procedure as written

7.3 Unanticipated changes to the procedures or materials described in this POP (deviations) will be appropriately documented in the project records.

7.4 Records associated with the activities described in this POP will be maintained according to the document management policy for the project.

8.0 Personnel Qualifications and Training

8.1 Qualifications and training

8.1.1 The individual executing these procedures must have read, and be familiar with, the requirements of this POP.

8.1.2 All field samplers are required to take the 40-hour OSHA health and safety training course and annual 8-hour refresher courses prior to engaging in any field collection activities.

8.1.3 Prior to implementation of this procedure, the field sampler will be instructed by a person experienced with this procedure and the collection of air samples using SUMMA canisters. The sampler will demonstrate to the Sampling Task Manager or designee the proper set-up, calibration, operation, and routine maintenance of the air sampling equipment, as well as an understanding of this procedure.

8.2 Responsibilities

8.2.1 The project manager is responsible for providing the project team with the materials, resources and guidance necessary to properly execute the procedures described in this POP.

8.2.2 The individual performing the work is responsible for implementing the procedures as described in this POP and any project-specific work plans.

9.0 References

Air Toxics Limited. *Guide to Air Sampling and Analysis – Canisters and Tedlar Bags*. 5th edition.

U.S. Environmental Protection Agency. 1999. *Compendium Method TO-15 - Determination of Volatile Organic Compounds (VOCs) in Air Collected in Specially-Prepared Canisters and Analyzed by Gas Chromatography/Mass Spectrometry (GC/MS)*. EPA/625/R-96/010b.

U.S. Environmental Protection Agency Emergency Response Team. 1995. *SUMMA Canister Sampling.* SOP 1704.

United States Environmental Protection Agency. 2001. Guidance for Preparing Standard Operating Procedures (SOPs). EPA QA/G-6. EPA/240/B-01/004. USEPA Office of Environmental Information, Washington, DC. March 2001.

10.0 Revision History

Revision	Date	Changes
0	September 2010	Original POP

Appendix B

Health and Safety Plan

Environment

Prepared for:
BASF
Toms River, NJ

Prepared by:
AECOM
Chelmsford, MA
60163799
May 2012

Health and Safety Plan

Former Ciba-Geigy Facility
Cranston, Rhode Island

Project Health and Safety Plan

This project Health and Safety Plan (HASP) was prepared for employees performing work at the former Ciba Geigy Facility in, Cranston, RI. It was prepared based on the best available information regarding the physical and chemical hazards known or suspected to be present on the project site. While it is not possible to discover, evaluate, and protect in advance against all possible hazards, which may be encountered during the completion of this project, adherence to the requirements of the HASP will significantly reduce the potential for occupational injury.

By signing below, I acknowledge that I have reviewed and hereby approve the HASP for activities the former Ciba Geigy facility in Cranston, RI. This HASP has been written for the exclusive use of AECOM, its employees, and subcontractors. The plan is written for specified site conditions, dates, and personnel, and must be amended if these conditions change.

PLAN PREPARED BY:

_____ _____

Julien Chambert Date
Environmental Scientist

REVIEWED BY:

_____ _____

Joanne Lynch Date
Project Manager

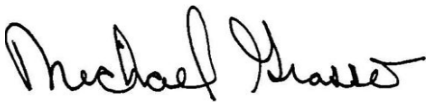

April 19, 2012

Michael Grasso, CIH Date
District Safety and Health Manager
607-282-0175

Record Issue & Revisions

Issue	Date Issued	Description of Revision		Reviewed By	Authorized By
		Page No	Comment		

Executive Summary

The purpose of this Health and Safety Plan (HASP) is to address health and safety concerns related to AECOM decommissioning activities at the former Ciba Geigy facility located at180 Mill Street in Cranston, RI. The specific roles, responsibilities, authority, and requirements as they pertain to the safety of employees and the scope of services are discussed herein. The document is intended to identify known potential hazards and facilitate communication and control measures to prevent injury or harm. Additionally, provisions to control the potential for environmental impact from these activities are included where applicable.

SUMMARY TABLE					
AECOM SOW		Groundwater sampling from existing monitoring wells (34 wells). Groundwater grab samples collected from 10 wells bored using a Geoprobe. Collection of soil vapor samples from four locations along the eastern property line. Collection of 29 shallow surface soil (0-2 feet bgs). Membrane Interface Probe (MIP) evaluation at five of the soil sample locations, pre-clearing all 29 soil boring locations down to 4 feet bgs, and collection of 29 soil samples from the 4-6 ft bgs interval for PCB analysis,			
PRIMARY PHYSICAL HAZARDS					
X	Underground Utilities		Fire/Explosion	**X**	Electrical
	Fall from elevation	**X**	Slips, Trips/Walking Surface	**X**	Noise
X	Struck by	**X**	Manual Lifting	**X**	Inclement Weather (heat/cold)

CHEMCIAL HAZARDS,		
COC	**Occupational Exposure Level**	**Signs & Symptoms**
Polychlorinated biphenyls (PCBs)	0.5 mg/m^3	Irritated eyes, chloracne skin rash
Chlorobenzene	75 ppm	Skin & eye irritation, incoordination, drowsiness
1,2 dichlorobenzene	50 ppm	Nose, eye irritation, skin blister, headaches, nausea, jaundice
Toluene	200 ppm	Fatigue, confusion, euphoria, dizziness, headache, tears
Xylene	100 ppm	Eye, nose & throat irritation, drowsiness, nausea, incoordination

AECOM personnel are bound by the provisions of this HASP and are required to participate in a preliminary project safety meeting to familiarize them with the anticipated hazards and respective onsite controls. The discussion will cover the entire HASP subject matter, putting emphasis on critical elements of the plan; such as the emergency response procedures, personal protective equipment, site control strategies, and monitoring requirements. In addition, daily tailgate safety meetings will be held to discuss: the anticipated scope of work, required controls, identify new hazards and controls, incident reporting, review the results of inspections, any lessons learned or concerns from the previous day.

Contents

Executive Summary iii

1.0 Introduction 1-1

1.1 Policy Statement 1-1

1.2 General 1-1

1.3 HASP Modification 1-1

1.4 Hazard Analysis 1-1

2.0 Site Description and Scope of Work 2-1

2.1 Site Location 2-1

2.2 Regulatory History 2-1

2.3 Project Objectives 2-3

2.4 Scope of Work 2-4

2.4.1 Groundwater Sampling 2-4

2.4.2 Soil Samples 2-4

2.4.3 Membrane Interface 2-4

3.0 Organization/Responsibility 3-1

3.1 Introduction 3-1

3.2 AECOM Project Manager 3-1

3.3 AECOM Safety Professional 3-1

3.4 AECOM Site Supervisor 3-1

3.4.1 Responsibilities 3-2

3.5 AECOM Site Safety Officer 3-2

3.5.1 Responsibilities 3-2

3.6 AECOM Field Personnel 3-3

3.7 Subcontractors 3-3

3.8 Visitors 3-4

4.0 Chemical Hazard Assessment and Control 4-1

4.1 Chemical Hazards 4-1

4.1.1 Polychlorinated Biphenyls 4-1

4.1.2 Chlorobenzene 4-1

4.1.3 1,2 dichlorobenzene 4-1

4.1.4 Toluene 4-1

4.1.5 Xylene 4-2

4.2 Hazardous Substances Brought On-Site by AECOM or Contractor 4-2

4.3 Chemical Exposure and Control 4-2

5.0 Biological/ Environmental Hazards and Controls 5-1

5.1 Poison Ivy 5-1

5.2 Ticks 5-1

5.3 Mosquitoes 5-2

5.4 Wasp and Bees 5-2

5.5 Heat Stress 5-3

5.5.1 Responding to Heat-Related Illness 5-3

5.6 Sun Exposure 5-4

5.7 Inclement Weather 5-4

6.0 Physical Hazards and Controls 6-1

6.1 Utility Clearance 6-1

6.2 Drill Rigs 6-1

6.3 Back Safety 6-2

6.4 Electrical Hazards 6-2

6.5 Falls 6-3

6.5.1 Same Level 6-3

6.6 Hand and Power Tools 6-3

6.6.1 Power Tools 6-4

6.7 Housekeeping and Sanitation 6-4

6.8 Noise Exposure 6-5

7.0 Safe Work Standards and Rules 7-1

7.1 Safe Work Practices 7-1

7.2 Personal Standards 7-1

7.3 General Safety Rules 7-2

7.4 Safety Equipment Rules 7-3

7.5 Work Ergonomic Rules 7-3

7.6 Hazardous Waste Site Rules 7-3

8.0 Air Monitoring 8-1

8.1 Monitors 8-1

8.1.1 Photoionization Detector 8-1

8.2 Personal Air Sampling 8-1

8.3 Calibration and Recordkeeping 8-1

9.0 Personal Protective Equipment 9-1

9.1 Respiratory Protection....9-1
9.2 Other Safety Equipment....9-2

10.0 Site Control 10-1
10.1 General....10-1
10.2 Controlled Work Area....10-1
10.2.1 Exclusion Zone....10-1
10.2.2 Contamination Reduction Zone....10-1
10.2.3 Support Zone....10-2
10.3 Site Accountability....10-2
10.4 Decontamination....10-2
10.5 PPE Decontamination....10-2
10.6 Equipment Decontamination....10-2
10.7 Investigation Derived Wastes....10-1

11.0 Medical Monitoring and Training Requirements 11-1
11.1 Medical Monitoring....11-1
11.2 Health and Safety Training....11-1
11.2.1 HAZWOPER....11-1
11.2.2 First Aid/CPR....11-1
11.3 Site-Specific Safety Training....11-1
11.4 Tailgate Meetings....11-1

12.0 Emergency Response 2
12.1 Employee Training....2
12.2 Alarm System/Emergency Signals....2
12.3 Escape Routes and Procedures....2
12.4 Employee Accounting Method....3
12.5 Release of Oil or Hazardous Materials....3
12.6 Injuries and Illnesses....3
12.6.1 First Aid....3
12.6.2 Professional Treatment....4
12.7 Incident Reporting and Investigation....4
12.8 Route to Occupational Clinic....6
12.9 Route to Hospital....7

List of Attachments

Attachment A Health and Safety Plan Receipt and Acceptance Form

Attachment B Job Safety Analysis Forms

Attachment C Daily Tailgate Form

Attachment D Supervisor's Report of Incident Form

1.0 Introduction

This Health and Safety Plan (HASP) provides a general description of the levels of personal protection and safe operating guidelines expected of each employee or subcontractor associated with the environmental services being conducted at the former Ciba-Geigy Facility in Cranston, RI. This document establishes general health and safety requirements, and procedures for the protection of AECOM personnel and to prevent and minimize personal injuries, illnesses and physical damage to equipment, supplies and property. HASP Supplements will be generated as necessary to address any additional activities or changes in site conditions, which may occur during field operations.

1.1 Policy Statement

AECOM is committed to protecting the safety and health of our employees and meeting our obligations with respect to the protection of others affected by our activities. We are also committed to protecting and preserving the natural environment in which we operate. The safety of persons and property is of vital importance to the success of this project and accident prevention measures shall be taken toward the avoidance of needless waste and loss. It shall be the policy of this project that all operations be conducted safely. Onsite supervisors are responsible for those they supervise by maintaining a safe and healthy working environment in their areas of responsibility, and by fairly and uniformly enforcing safety and health rules and requirements for all project personnel. Subcontractors shall comply with the requirements of this HASP, provisions contained within the contract document and all applicable rules, requirements and health, safety and environmental regulations. All practical measures shall be taken to promote safety and maintain a safe place to work. Contractors are wholly responsible for the prevention of accidents on work under their direction and shall be responsible for thorough safety and loss control programs and the execution of their own safety plans for the protection of workers.

1.2 General

The provisions of this HASP are mandatory for all AECOM personnel engaged in fieldwork associated with the environmental services being conducted at the subject site. A copy of this HASP, any applicable HASP Supplements and the AECOM's North America Safety, Health, and Environmental (SH&E) Procedures and Manual should be accessible for review at all times. Record keeping will be maintained in accordance with this HASP and the applicable Standard Operating Procedures (SOPs). In the event of a conflict between this HASP, the SOPs and federal, provincial, state, and local regulations, workers shall follow the most stringent/protective requirements. Concurrence with the provisions of this HASP is mandatory for all personnel at the site covered by this HASP and must be signed on the acknowledgement page (Attachment A).

1.3 HASP Modification

Should significant information become available regarding potential on-site hazards, it will be necessary to modify this HASP. The SSO with concurrence from the Project Manager and AECOM Safety Professional may make field modifications to the HASP.

Any significant modifications must be incorporated into the written document as addenda and the HASP must be reissued. The AECOM PM will ensure that all personnel covered by this HASP receive copies of all issued addenda. Sign-off forms will accompany each addendum and must be signed by all personnel covered by the addendum. Sign-off forms will be submitted to the AECOM PM. The HASP addenda should be distributed during the daily safety meeting so that they can be reviewed and discussed. Attendance forms will be collected during the meeting.

1.4 Hazard Analysis

A Task Hazard Analyses (THA) has been completed for the task identified in the AECOM Scope of Work (Attachment B): As a result of unanticipated work activities or changing conditions, additional THAs may be required. All additional THAs will be reviewed and approved by the SH&E Professional.

2.0 Site Description and Scope of Work

2.1 Site Location

The legacy Ciba Corporation former production site is located at 180 Mill Street in Cranston, Rhode Island, and an adjoining set of three parcels, collectively called the Bellefont Property located directly across Mill Street. BASF has assumed responsibility for these sites through its purchase of Ciba Corporation.

The former Ciba production facility currently consists of approximately 5.5 acres, with several buildings and open land, upon which chemical production buildings were located adjacent to the Pawtuxet River. All the structures south of the rail spur were demolished in the late 1980s. Building footings and foundations remain in place as do many of the subsurface sumps and waste transfer lines.

2.2 Regulatory History

At the former Ciba-Geigy facility, the compounds chlorobenzene, 1,2-dichlorobenzene, 2-chlorotoleune, toluene, xylenes were identified as constituents of concern (COC). Media Protection Standards (MPS) were developed for these compounds in the RFI (1995). While areas of concern have been identified, recent data suggest that there are source area(s) within the Production Area that have not been fully defined. Additionally, based on AECOM's review of the Site RFI and subsequent investigations, it appears that there are several potential environmental issues that have not been fully assessed. Figure 1 of the Work Plan presents the Site areas of concern, Solid Waste Management Unit (SWMU) locations, and additional areas of investigation (AAOI) described below. The unresolved potential environmental issues can be summarized as follows:

- The Ciba-Geigy facility ceased all chemical manufacturing operations in May 1986 when the plant was closed. The RFI (1995) indicates that the plant closure included the removal of materials and residues, as well as the proper disposal of wastes and hazardous wastes. The structures associated with the SWMUs, AOCs, and AAOIs were dismantled. Therefore, except for SWMU-6 (Zinc Oxide/Soil Storage Pile), wastes were not available to be characterized, and physical descriptions of SWMUs and AOCs are based on historical information.

- Sediment was excavated and removed from the Site during two removal actions (Interim Remedial Measures). One action focused on the former coffer dam area within the Pawtuxet River and was completed in 1996. The sediment was delineated based on visual impacts; 159 stabilized tons of potentially hazardous sediment were removed and 2,210 stabilized tons of non-hazardous sediment were removed and disposed of at appropriate facilities. The second sediment removal was based on the total PCB concentrations detected within sediment and focused on sediment removal from three discrete areas within the river. Oily residue within the sediment from the middle area suggests that source material may be on the other side of the bulkhead wall.

- A membrane interface probe (MIP) study performed in 2007 identified an area within the Southern Production Area as containing elevated concentrations of chlorobenzene, 1,2-dichlorobenzene, toluene, and 2-chlorotoluene.

- The Groundwater Extraction and Treatment System (GETS) was turned on in 1995. The design was detailed in the Stabilization Report. The GETS was turned off with EPA approval in May 2006 because the MPS had been met. Ciba followed up with groundwater monitoring but found that concentrations of chlorobenzene and 2-chlorotoluene had increased above the MPS. The system was turned back on and ran until April 2010 when it was damaged in a significant flood event of the Pawtuxet River. Quarterly monitoring since that time shows that the MPS have been exceeded at MW-2S and P-35S for chlorobenzene. No other Site COCs exceed the MPS in groundwater in 2011. However, elevated concentrations of vinyl chloride in groundwater at MW-2S were noted (33 ug/L to 490 ug/L) in 2011.

- An air sparge pilot test was proposed to evaluate air sparging as an alternative to the GETS remedy. Based on the MIPs data collected in 2007, an isolated area within the Southern Production Area was

targeted for additional investigation and testing. The pilot test results indicated that elevated concentrations of 1,2,4-trimethylbenzene, 1,3,5-trimethylbenzene, 2-chlorotoluene, chlorobenzene, naphthalene, n-propylbenzene in the part per million range were present in soil, outside of the isolated zone identified previously. Dichlorobenzene was also detected in the hundreds of part per million range within the previously identified zone. Furthermore, while the pilot test indicated that the surficial unit was viable for air sparging technology, no connection was made with the lower impacted geologic unit that was situated below a well-defined silt layer.

- SWMU 11 had an operating SVE system to address a toluene spill of ~90 lbs in 1983 from a pipeline. A Post-SVE Soil Sampling Report was submitted to EPA in January 2005. Confirmatory samples in the SWMU-11 area were down to 7 ft bgs, at the watertable. However, the presence of other COCs with a specific gravity greater than water's specific gravity in that area based on historical reporting (RFI, 1995) suggests that additional sampling at depth below the water table is warranted.

- PCBs in surface soil were removed in an On-Site IRM (Woodward-Clyde, 1996). PCB concentrations above 45 ppm were removed down to 1-2 feet below ground surface.

- The RFI notes that DNAPL was discovered in a 6,400 square foot area during the installation of MW -35 monitoring well pair. The mapping in the RFI does not delineate the location. The oil was visually identified by site personnel as Dowtherm, but no confirmation sampling was completed on this material.

- The private residences that abut the former Ciba-Geigy facility to the northeast had been owned by Ciba-Geigy during plant operations. No information is on file about the property transfer. Further, no data exist to confirm that there are no off-site vapor intrusion issues.

- Former USTs and a below-ground vault located on the northeastern portion of the site were decommissioned according to BASF staff interviews, but no confirmatory sampling or closure reporting exists.

- There was a boiler plant jet sump failure in the southern portion of the site and observation of possible solvent in the sump in the mid-1970s. Footings for the boiler plant were exposed and a large area beneath the building was filled in with concrete for structural support in approximately 1978 (based on interview with facility staff). This area coincides with the elevated soil concentrations denoted in the 2007 MIP investigation at MIP-1, MIP-2, MIP-5, and MIP-7.

- Off-site monitoring wells are not represented on maps or figures in the RFI. In 2011, site personnel completed a well list and descriptions: wells P-20S, P20D, and RW-4 are/were located at #42/44 Robert Circle; P-23D was located at 123 Lyndon Rd; P-24D and MW-19S were located in the street across from 136 Mayflower Drive.

- The site previously utilized one septic system for wastewater disposal (reportedly) prior to Ciba building a wastewater treatment plant off-Site in 1975. Site personnel have indicated that the sewage tank is located to the east of Building 14. The system was abandoned when the plant closed in 1986. No records are in BASF files regarding a septic system being abandoned at the Site. As a result, there is the potential that wastewaters generated onsite prior to 1975 were discharged to a septic system that has not been appropriately abandoned (i.e., structure removed along with any impacted soils). The septic tank was discovered to be full of liquid when investigated in late 2011. It appears that a backflow preventer failed at Mill Street and resulted in the tank filling with liquid.

- The RFI document cites a number of spills or releases to the environment that have occurred from historical operations. Many of the spills were reported to the regulatory agencies (e.g. Rhode Island Department of Environmental Management) and corrective actions were completed. However, based on available documentation, a number of the incidents could not be resolved regarding completion of cleanup and closure. Thus, there is the potential that one or more of the releases has impacted the subsurface at

the Site. There are general locations cited for the spills and the field program described herein preferentially locates some soil borings in these areas.

- The RFI does not mention or indicate the presence of an underground tank farm northeast of the railroad tracks, between the tracks and the Robert Circle residences. The UST farm was discovered through discussions with former facility staff and reviewing a Site sketch. The UST farm was connected by an underground, reinforced concrete tunnel that was reportedly sealed and abandoned in 1972. Site interviews indicate that it was a confined space and that, during plant closure in 1986, the tunnel was possibly crushed and filled with construction debris. There is no documentation on the removal, confirmation sampling, or cleanup around the former tank farm area. As a result, there is the potential that these USTs have impacted the subsurface beneath the building. As part of the field program described herein, two soil borings will be advanced in these historical locations to assess residual soil impacts. This proposal does not incorporate an investigation inside the tunnel or UST vault to evaluate if Site COPCs are present in the tunnel or UST vault; the investigation will evaluate soil around the former tank vault.

The investigation described herein has been developed to further evaluate these data gaps and to provide data to be used to support the regulatory closure process.

2.3 Project Objectives

The persistent concentrations of Site COCs in groundwater suggests that residual source zones may remain in the Southern Production Area, possibly related to the presence of former Site building foundations, piping, and sumps in the subsurface. One of the objectives of this supplemental remedial investigation is to delineate and identify any residual sources that may not allow for the attainment of MPS within a reasonable timeframe. Once residual sources, if present, are delineated, a focused feasibility evaluation of remediation alternatives for impacted groundwater can then be conducted. The focused feasibility evaluation scope is not included in this proposal.

After completion of the Revised On-Site Soil Interim Remedial Measures Report (Woodward-Clyde, 1996) and the On-Site Corrective Measures Study Report (Woodward-Clyde, 1996) for the On-Site Soil in the Southern Production Area, Ciba had concluded that the removal of 2,100 tons of potentially contaminated PCB soils and placement of twelve inches of clean fill would eliminate dermal contact and ingestion exposure pathways. One of the objectives of this investigation will be to collect additional soil samples from the Southern Production Area to evaluate current PCB distribution and concentrations in shallow (0-2 feet below ground surface, ft bgs) and deeper (4-6 ft bgs) soil. Confirmatory PCB soil data from the CMS and IRM reports will also be entered into the project database. The new and historic PCB soil data will be evaluated by EPA Region I to close the PCB regulatory issue.

BASF has also requested that AECOM complete a LER evaluation at this site, consistent with the methods previously used at other sites. BASF has directed AECOM to collect and evaluate data, summarize the risk evaluation, and provide support for a BASF-generated LER document. The purpose of the LER evaluation is to estimate the extent of potential environmental liabilities at a site with a quantitative degree of confidence. BASF can then use this information to manage their environmental liabilities. On previous sites, AECOM has successfully used an approach based on a combination of risk assessment and geostatistics to provide estimates with 90% confidence where remaining contamination is above (or below) risk-based targets. The risk evaluation described herein will support a site reuse determination by BASF.

It is AECOM's intent to complete a scope of work consistent with BASF's LER requirements which will also be used to identify any remaining, discrete source zones within the Southern Production Area and provide data to evaluate any risk from direct contact of soils. In order to complete the LER evaluation, collect soil data to support Site closure, and to address the outstanding environmental data gaps listed above, AECOM proposes the soil, groundwater, and soil vapor investigation described below.

2.4 Scope of Work

2.4.1 Groundwater Sampling

Groundwater samples will be collected from existing monitoring wells (a total of 34 wells) and depth to water will be gauged. QA/QC samples will be collected at a frequency of one per every 10 analytical samples or 1 minimum per day. Trip blanks and equipment rinseate blanks will also be collected at the same frequency. Groundwater samples will be analyzed for volatile organic compounds using Method 8260 (VOCs). Well locations and elevations will be surveyed referencing to local datum by a licensed surveyor.

Groundwater grab samples will be collected at 10 locations along two transects that run parallel to the bulkhead wall using a Geoprobe. Two grab samples will be collected from each location, at approximately 2 and 7 feet below the bottom of the bulkhead wall. Historical cross-sections suggest that this corresponds to a depth of approximately 27 and 32 feet below ground surface (ft bgs). It appears that Woodward-Clyde installed the existing bulkhead wall in approximately 1990. The former structure consisted of a concrete wall (deadman) with reinforcing steel about 10 ft upland of the current bulkhead. The wall extended approximately 8 ft bgs. A former bulkhead wall (also ~8 ft bgs) was located 5 ft upland of the current bulkhead wall. No soil samples will be collected during the advancement of the boreholes for the monitoring wells. The groundwater grab sampling will allow for the targeting of specific vertical and horizontal intervals for a mass flux and/or remedial evaluation.

2.4.2 Soil Samples

Up to 29 shallow surface soil (0-2 feet bgs) samples will be collected and analyzed for VOCs (Method 8260), PCBs (Method 8082, with Method 3540 Soxhlet extraction), SVOCs (Method 8270), metals (Methods 6010, 7471, and 9012) (as described on Table 2), and pesticides (Method 8082). Approximately six samples will be located within the footprint of the historic PCB soil remediation areas and 23 will be located outside of this footprint. It is necessary to collect samples within and outside of the footprint of historic remediation areas to evaluate the completeness of the historic remediation areas, as well as the conditions of soil in other areas of the Site.

2.4.3 Membrane Interface

Membrane Interface Probe (MIP) evaluation at five of the soil sample locations, pre-clearing all 29 soil boring locations down to 4 feet bgs, and collection of 29 soil samples from the 4-6 ft bgs interval for PCB analysis, as requested by USEPA. Based on the results of the Phase I groundwater results and the MIP evaluation, it is assumed that an additional 10 soil samples will be submitted for VOC analysis after 1 day of geoprobe activities.

- A MIP will be mobilized and advanced into soil at five locations across the Site. The MIP is a percussion-tolerant VOC sensor that can log volatile organics that diffuse through a semi-permeable membrane. Using a carrier gas, the VOCs are brought to the surface through tubing, which is connected to a laboratory grade Photoionization Detector (PID), Flame Ionization Detector (FID), and Electron Capture Detector (ECD) for immediate screening. The MIP log provides semi quantitative/qualitative information on contaminant levels and lets the investigator collect targeted samples from contaminated zones. Information from both the MIP and electrical conductivity logs provides information on contaminant distribution and migration pathways. The purpose of the MIP locations will be to refine the vertical delineation of persistent residual source areas within the subsurface. This will allow for the targeting of specific vertical intervals for a mass flux and/or remedial evaluation.

- Up to 29 soil borings will be advanced across the Site. The preliminary locations of the borings are illustrated on the attached Figure 1 of the Work Plan. The final locations of the borings will be determined after the utilities have been cleared, and pre-clearing has been completed. It is assumed that the total depth of each boring will be no greater than 6 ft bgs. One soil sample will be collected from each of the 29 boring locations from the 4-6 ft bgs interval for PCB analysis.

3.0 Organization/Responsibility

3.1 Introduction

The implementation of health and safety at this project location will be the shared responsibility of the AECOM Project Manager (PM), the AECOM Safety Professional, the AECOM Project Site Safety Officer (SSO), and other AECOM personnel and AECOM's contractors implementing the proposed scope of work. Contractors who have been hired directly by Alliance will maintain their own HASP and THAs.

3.2 AECOM Project Manager

The AECOM PM (Joanne Lynch) is the individual who has the primary responsibility for ensuring the overall health and safety of this project. The specific safety responsibilities for the PM are listed in Section 4.2 of SH&E 301, *Project SH&E Planning Documentation*. The PM will provide the site supervisor with work plans, staff, and budgetary resources, which are appropriate to meet the safety needs of the project operations. As such, the PM is responsible for ensuring that the requirements of this HASP are implemented. Some of the PM's specific responsibilities include:

- Allocate the resources necessary for the successful implementation of all necessary safety procedures;
- Ensure that AECOM subcontractor(s) have received a documented verbal full review of the HASP, as well as documented quarterly verbal HASP reviews;
- Communicate health and safety expectations to field staff and subcontractors;
- Select subcontractors based on their safety and health performance metrics;
- Support the decisions made by the field team;
- Maintain regular communications with the field team and, if necessary, the AECOM Safety Professional; and
- Conduct random project audits. (Management Site Visits).

3.3 AECOM Safety Professional

The AECOM Safety Professional (Mike Grasso/Phil Platcow) is the individual responsible for the preparation, interpretation and modification of this HASP. Modifications to this HASP which might result in less stringent precautions cannot be undertaken by the PM or the SSO without the approval of the AECOM Safety Professional. Specific duties of the AECOM Safety Professional include:

- Write, approve and amend the HASP for this project;
- Review for acceptance subcontractors HASP and THAs for the project**;**
- Advise the PM and field team on matters relating to health and safety on this site;
- Recommend appropriate PPE and respiratory equipment to protect personnel from potential site hazards;
- Facilitate Incident investigations;
- Maintain regular contact with the PM and field team to evaluate site conditions and new information which might require modifications to the HASP; and
- Conduct random project audits.

3.4 AECOM Site Supervisor

The site supervisor has the overall responsibility and authority to direct work operations at the job site according to the provided work plans. The PM may act as the site supervisor while on site. Based on the nature of the work, it is anticipated that the site supervisor may change from task to task, and an updated org chart will be hand edited

in the field before the activities begin to include the designated Site Supervisor and Site Safety Officer for that event. This field form can then be returned to the office for scanning and incorporation into the electronic file, or photographed in the field with a cell phone and e-mailing the file to the Project Manger after the tailgate safety meeting.

3.4.1 Responsibilities

The site supervisor is responsible to:

- Discuss deviations from the work plan with the SSO and PM;
- Discuss safety issues with the PM, SSO, and field personnel;
- Assist the SSO with the development and implementation of corrective actions for site safety deficiencies;
- Assist the SSO with the implementation of this HASP and ensuring compliance; and
- Assist the SSO with inspections of the site for compliance with this HASP and applicable SOPs.

3.5 AECOM Site Safety Officer

All AECOM field technicians are responsible for implementing the safety requirements specified in this HASP. However, one field technician will serve as the SSO. The SSO will be appointed by the PM and approved by the AECOM Safety Professional. The SSO will be on-site during all activities covered by this HASP. The SSO is responsible for enforcing the requirements of this HASP once work begins. The SSO has the authority to immediately correct all situations where noncompliance with this HASP is noted and to immediately stop work in cases where an immediate danger is perceived.

3.5.1 Responsibilities

Some of the SSO's specific responsibilities include:

- Ensure that all personnel to whom this HASP applies, including all subcontractors, have been given a documented verbal full HASP review/site orientation by AECOM, and submitted a completed copy of the HASP review and acceptance form (Attachment A);
- Ensure that all personnel to whom this HASP applies have attended a documented pre-job/shift briefing and any subsequent safety meetings that are conducted during the implementation of the program;
- Update the site-specific HASP to reflect changes in site conditions or the scope of work. HASP updates must be reviewed and approved by the AECOM Safety Professional before the modifications are to be implemented;
- Be aware of changes in AECOM Safety Policy;
- Monitor the lost time incidence rate for this project as well as lost time associated with all OSHA-recordable incidents and work toward improving it;
- Inspect the site for compliance with this HASP and the SOPs using the appropriate audit inspection checklist provided by an AECOM Safety Professional;
- Work with the site supervisor and PM to develop and implement corrective action plans to correct deficiencies discovered during site inspections. Deficiencies will be discussed with project management to determine appropriate corrective action(s);
- Provide a means for employees to communicate safety issues to management in a discreet manner (i.e., suggestion box, etc.);
- Procure all appropriate air monitoring instrumentation required and perform air monitoring for AECOM and subcontractor activities;
- Procure and distribute the PPE and safety equipment needed for this project for AECOM employees;
- Verify that all PPE and health and safety equipment used by AECOM is in good working order;

- Verify that AECOM subcontractors have a written HASP, workers are trained in accordance with training requirements of this HASP and that subcontractors are prepared with the appropriate PPE, respiratory protection and safety equipment required for this project;
- Prepare an initial JSA during the initial mobilization and revising the JSA if conditions or tasks change and communicating with all workers the results of the JSA. The JSA will be reviewed daily by all workers and updated as needed;
- Notify the PM of all noncompliance situations and stop work in the event that an immediate danger situation is identified;
- Determine emergency evacuation routes, establishing and posting local emergency telephone numbers, and arranging emergency transportation;
- Ensure that all site personnel and visitors have received the proper training and medical clearance prior to entering the work areas;
- Establish any necessary controlled work areas (as designated in this HASP or other safety documentation);
- Conduct accident/incident investigations and prepare accident/incident investigation reports as well as preparation of preventative action plans;
- Conduct the pre-job/shift briefing for AECOM employees and subcontractors prior to beginning of work and subsequent tailgate safety meetings and maintain attendance logs and records;
- Discuss potential health and safety hazards with the Site Supervisor, the AECOM Safety Professional, and the PM;
- Initiate emergency response procedures in accordance with Section 13.0 of this HASP; and
- Select an alternate SSO by name and inform him/her of their duties, in the event that the SSO must leave or is absent from the site. The alternate SSO must be approved by the PM and the AECOM Safety Professional.

3.6 AECOM Field Personnel

All AECOM field personnel covered by this HASP are responsible for following the health and safety procedures specified in this HASP and for performing their work in a safe and responsible manner.

Some of the specific responsibilities of the field personnel associated with this project are discussed below.

- Understand and abide by the policies and procedures specified in the HASP and other applicable safety policies, and clarifying those areas where understanding is incomplete;
- Provide feedback to health and safety management relating to omissions and modifications in the HASP or other safety policies;
- Notify the SSO, verbally and in writing, of unsafe conditions and acts;
- The right to refuse to work and/or stop work authority when the employee feels that the work is unsafe (including subcontractors or team contractors), or where specified safety precautions are not adequate or fully understood;
- The right to refuse to work on any site or operation where the safety procedures specified in this HASP or other safety policies are not being followed; and
- The right to contact the SSO or the AECOM Safety Professional at any time to discuss potential concerns.

3.7 Subcontractors

All Subcontractors performing work under this contract shall comply with all applicable federal, state and local safety and occupational health laws and regulations. This includes, but is not limited to the Occupational Safety and Health Administration (OSHA) 29 CFR 1926 Safety and Health Regulations for Construction and 29 CFR 1910 Occupational Safety and Health Standards. Whenever the requirements of applicable federal, state and local

occupational safety and health law or regulation conflicts or overlaps with another, the provision more protective of worker safety and health shall apply.

All Subcontractors performing work under this contract shall be responsible for preparing and implementing an effective Safety Plan for the duration of the project. Each Subcontractor's Safety Plan shall at a minimum comply with the minimum requirements set forth in this HASP and 29 CFR 1910.120(b)(4)(ii).

In addition, all Subcontractors shall prepare and submit a written Health and Safety Plan that addresses all Subcontractor safety procedures, rules, precautions, and equipment to be used during site operations. Subcontractors' field work shall not begin until their HASP has been submitted to AECOM.

Additionally, subcontractors hired by AECOM are responsible for:

- Reading the HASP in its entirety prior to the start of on-site work;
- Attending the required pre-entry briefing prior to beginning on-site work and any subsequent safety meetings that are conducted during the implementation of the program;
- Ensuring that their equipment is in good working order via daily inspections;
- Operating their equipment in a safe manner;
- Appointing an on-site safety coordinator/competent person to interface with the AECOM SSO;
- Providing AECOM with copies of material safety data sheets (MSDS) for all hazardous materials brought on-site; and,
- Providing all the required PPE, respiratory equipment and safety supplies to their employees.

3.8 Visitors

Authorized visitors (e.g., client representatives, regulators, AECOM management staff, etc.) requiring entry to any work location on the site will be briefed by the SSO on the hazards present at that location. Visitors will be escorted at all times at the work location and will be responsible for compliance with their employer's health and safety policies. In addition, this HASP specifies the minimum acceptable qualifications, training and PPE which are required for entry to any controlled work area; visitors must comply with these requirements. Unauthorized visitors, and visitors not meeting the specified qualifications, will not be permitted within established controlled work areas.

4.0 Chemical Hazard Assessment and Control

4.1 Chemical Hazards

4.1.1 Polychlorinated Biphenyls

Polychlorinated biphenyls (PCBs) are a series of technical mixtures consisting of many isomers and compounds that vary from mobile oily liquids to white crystalline solids to hard non-crystalline resins. PCB oils are typically used in heat transfer applications, hydraulic fluids and lubricants. Technical products vary in composition and in the degree of chlorination. The higher the degree of chlorination, the greater the toxicity. Dermal contact with liquid PCBs may produce skin irritation or a rash. Dermal contact with liquid PCBs may produce skin irritation or a rash. Prolonged or repeated skin contact may cause dermatitis or "chloracne." Studies suggest that chronic exposure to PCBs may be toxic to the liver. The OSHA permissible exposure limit (PEL) for PCBs with a 54% chlorine content is 0.5 mg/m3, as an 8-hr time-weighted average (TWA).

4.1.2 Chlorobenzene

Chlorobenzene is a colorless, flammable liquid with an aromatic, almond-like odor. Some of it will dissolve in water, but it readily evaporates into air. Chlorobenzene released to air is slowly broken down by reactions with other chemicals and sunlight or can be removed by rain. Workers exposed to high levels of chlorobenzene in the air complained of headaches, nausea, sleepiness, numbness, and vomiting. Animal studies indicate that the liver, kidney, and central nervous system are affected by exposure to chlorobenzene. Effects on the central nervous system from breathing chlorobenzene include unconsciousness, tremors, restlessness, and death. Longer exposure has caused liver and kidney damage.

The Occupational Safety and Health Administration has set a limit of 75 parts Chlorobenzene per million of workplace air (75 ppm) for 8 hour shifts and 40 hour work weeks.

4.1.3 1,2 dichlorobenzene

1,2 dichlorobenzene, is colorless yellowish liquid with a pleasant odor. When released into the soil, 1,2 Dichlorobenzene may evaporate to a moderate extent. When released into water, this material may evaporate to a moderate extent. Although this material has a relatively short half-life in water, it can also readily be adsorbed to sediment and persist for decades. Workers exposed to 1,2 dichlorobenzene in the air experienced irritation to the respiratory tract., headache, nausea, swelling around the eyes, runny nose, loss of appetite and weight loss. Higher concentrations may cause drowsiness, central nervous system depression, kidney and liver damage, unconsciousness, and death. Skin contact causes irritations and possibly burns if contact is repeated or prolonged. 1,2 dichlorobenzene may be absorbed through the skin. Chronic exposure may damage blood, liver and kidneys. p-Dichlorobenzene is a possible carcinogen. Prolonged or repeated skin exposure may cause dermatitis and blisters. Prolonged or repeated exposure through any route may cause symptoms paralleling acute inhalation.

The Occupational Safety and Health Administration has set a limit of 50 parts 1,2 Dichlorobenzene per million of workplace air (50 ppm) for 8 hour shifts and 40 hour work weeks.

4.1.4 Toluene

Toluene is a clear, colorless liquid with a distinctive smell Toluene may affect the nervous system. Low to moderate levels can cause tiredness, confusion, weakness, drunken-type actions, memory loss, nausea, loss of appetite, and hearing and color vision loss. These symptoms usually disappear when exposure is stopped. Inhaling High levels of toluene in a short time can make you feel light-headed, dizzy, or sleepy. It can also cause unconsciousness, and even death. High levels of toluene may affect your kidneys.

The Occupational Safety and Health Administration has set a limit of 200 parts toluene per million of workplace air (200 ppm) for 8 hour shifts and 40 hour work weeks.

4.1.5 Xylene

Xylene is a colorless, sweet-smelling liquid that catches on fire easily. Xylene is used as a solvent and in the printing, rubber, and leather industries. It is also used as a cleaning agent, a thinner for paint, and in paints and varnishes. Xylene evaporates quickly from the soil and surface water into the air.

High levels of exposure for short or long periods can cause headaches, lack of muscle coordination, dizziness, confusion, and changes in balance. Exposure of people to high levels of xylene for short periods can also cause irritation of the skin, eyes, nose, and throat; difficulty in breathing; problems with the lungs; delayed reaction time; memory difficulties; stomach discomfort; and possibly changes in the liver and kidneys. It can cause unconsciousness and even death at very high levels.

The Occupational Safety and Health Administration (OSHA) has set limits of 100 parts xylene per million parts of workplace air (100 ppm) for 8 hour shifts and 40 hour work weeks.

4.2 Hazardous Substances Brought On-Site by AECOM or Contractor

Hazardous materials that may be encountered as existing on-site environmental or physical/health contaminants during the work activities are addressed in this HASP and their properties, hazards and associated required controls will be communicated to all affected staff and subcontractors.

In addition, any employee or organization (contractor or subcontractor) intending to bring any hazardous material onto this AECOM-controlled work site must first provide a copy of the item's Material Safety Data Sheet (MSDS) to the SSO for review and filing (the SSO will maintain copies of all MSDS on site). MSDS may not be available for locally-obtained products, in which case some alternate form of product hazard documentation will be acceptable in accordance with the requirements of *S3NA-507-PR Hazardous Materials Communication/WHMIS*.

All personnel shall be briefed on the hazards of any chemical product they use, and shall be aware of and have access to all MSDS.

All containers on site shall be properly labeled to indicate their contents. Labeling on any containers not intended for single-day, individual use shall contain additional information indicating potential health and safety hazards (flammability, reactivity, etc.).

4.3 Chemical Exposure and Control

The potential chemical hazards associated with the proposed activities can be controlled in several ways, including:

- Maintaining an upwind position;
- Avoid direct contact with contaminated media, as well as sampling equipment that has come in contact with potentially impacted sediments, soils and groundwater. Personal protective equipment (PPE), as described in Section 9.0 of this HASP, will be worn.
- Although highly unlikely, exposure to all of the contaminants of concern may occur via ingestion (hand-to-mouth transfer). The decontamination procedures described in Section 10.0 address personal hygiene issues that will limit the potential for contaminant ingestion

5.0 Biological/ Environmental Hazards and Controls

During the course of field work employees are at risk of being exposed to poisonous plants, insects, spiders and snakes. The two most prevalent biological hazards are poison ivy and ticks. Additional information on Biological Hazards are addressed in SH&E SOP S3NA-313-PR.

5.1 Poison Ivy

Poison ivy is a common cause of a skin irritation called contact dermatitis that may result in a red, itchy rash consisting of small bumps, blisters or swelling. This native perennial grows throughout Northeast, in woods, fields, and sometimes in the garden. It grows in sun or shade, and in wet or dry places. Its growth habit depends on where it is growing, resulting in a trailing ground cover, free-standing shrub, or a vine supported by trees, shrubbery and fences. All parts of the poison ivy plant contain, urushiol, which causes the allergic reaction. Most poisoning occur during the growing season when the presence of lush foliage increases the chance of contact, but the dormant stems and roots of the vine can cause winter poisoning as well.

The best way to protect yourself against poison ivy is to avoid poison ivy. The best defense against contracting poison ivy is to recognize the plants. “Leaves of three, let it be” refers to the groupings of three leaflets connected to a common stem that characterize most of these plants. However, if you cannot avoid poison ivy, follow these precautions to help prevent contact:

- Wear protective clothing such as long-sleeved shirts, long trousers, boots or sturdy shoes with socks and gloves;
- Use a barrier cream such as CoreTex IvyX™ Pre-Contact solution;
- If heat stress will not be a problem the use of a Tyvek™ coveralls and nitrile gloves is recommended for areas with heavy poison ivy infestation.
- If contact with poison ivy has been made or is suspected, follow these guidelines:
- As soon as possible (within 5–10 minutes of contact), wash all exposed skin with strong soap (i.e. Dawn) and water to remove the oil. If this is not possible, rinse thoroughly with water;
- Use a post-contact skin cleanser such as Tenu® skin cleanser or CoreTex IvyX™ cleanser towelettes.
- Put on gloves to remove clothes and shoes, and wash clothing in hot water and detergent to remove any plant oil that may be on them.
- Notify your supervisor if contact or suspected contact is made with poison ivy.
- If a severe allergic reaction develops seek medical attention.

5.2 Ticks

Ticks transmit bacteria that cause illnesses such as Lyme disease or Rocky Mountain spotted fever. Ticks wait for host from the tips of grasses and shrubs (not from trees). When brushed by a moving person, they quickly let go of the vegetation and climb onto the host. Ticks can only crawl; they cannot fly or jump. Tick season typically lasts from April through October; peak season is May through July; seasons can vary depending on climate. Ticks can be active on winter days when the ground temperatures are about 45° Fahrenheit.

The best way to protect yourself against tick borne illness is to avoid tick bites. This includes avoiding known tick-infested areas. However, if you visit wooded areas or areas with tall grass and weeds, follow these precautions to help prevent tick bites and decrease the risk of disease:

- Wear protective clothing such as long-sleeved shirts, long trousers, boots or sturdy shoes and a head covering. (Ticks are easier to detect on light-colored clothing.)
- Tuck trouser cuffs in socks. Tape the area where pants and socks meet so ticks cannot crawl under clothing.
- Apply insect repellent containing 10 percent to 30 percent DEET or 5 percent to 10 percent picaridin primarily to clothes. Apply sparingly to exposed skin. Do not spray directly to the face; spray the repellent onto hands and then apply to face. Avoid sensitive areas like the eyes, mouth and nasal membranes. Be sure to wash treated skin after coming indoors.
- Use repellents containing permethrin to treat clothes (especially pants, socks and shoes) but not skin. Always follow label directions; do not misuse or overuse repellents.
- Those who wish to avoid the use of insect repellent or treated clothing should consider the use of the Original Bug Shirt® and pants, and tick/chigger garters.
- Personnel should carefully inspect themselves each day for the presence of ticks or any rashes. This is important since prompt removal of the tick can prevent disease transmission. Removal of the tick is important in that the tick should not be crushed and care must be taken so that the head is also removed. Contact the RSHEM for guidelines on removing ticks.
- Report tick exposure and bites to your supervisor.

5.3 Mosquitoes

Mosquitoes, carriers of the West Nile Virus, Yellow Fever and other diseases, are indigenous to the area. As mentioned above, DEET is an effective mosquito repellent and is recommended. Although concentrated DEET formulations protect longer than those that are more dilute, little improvement is offered by concentrations of the active ingredient higher than 50 percent. Adverse effects, though documented, are infrequent and are generally associated with gross overuse of the product. Users should avoid the temptation to apply the most concentrated product available. The transient protection offered by more dilute preparations can be extended by reapplication. When using DEET care should be taken to reapply the repellant when its effectiveness wears off.

5.4 Wasp and Bees

Wasps (hornets and yellow-jackets) and bees (honeybees and bumblebees) are common insects that may pose a potential hazard to the field team if work is performed during spring, summer or fall. Bees normally build their nests in the soil. However, they use other natural holes such as abandoned rodent nests or tree hollows. Wasps make a football-shaped, paper-like nest either below or above the ground. Yellow-jackets tend to build their nests in the ground but hornets tend to build their nests in trees and shrubbery. To avoid bees and wasps:

- If you see insects flying to and from a particular place, avoid it
- If you are going to be in an area where disturbing a nest is likely, wear long pants and a long sleeved shirt. Insect repellent applied to your skin or clothing will not deter these stinging insects.
- Wear light colored clothing.
- Remain as calm as possible if a bee or wasp lands on your skin.
- If you don’t want to wait for it to leave, gently and slowly brush it away.

- It is best not to wear perfume, cologne, or other scented soaps or scented shampoos as this attracts bees and wasps.
- Never swing, strike or run rapidly away since quick movement often provokes attack and painful stings.
- Restrain from throwing rocks or spraying nests with water.
- Avoid creating loud noises and disturbance near the nest.
- When a wasp or a bee stings a person, it injects a venomous fluid under the skin. The venom causes a painful swelling that may last for several days.
- Gently scrape the area of the bite using a blunt object like a fingernail or a credit card to remove the stinger. If removed within 15 seconds of the sting, the severity of the sting is reduced.
- Try not to rub or scratch the sting site after the stinger is removed
- Wash the sting site with soap and water.
- Apply a cold or ice pack wrapped in cloth for a few minutes.
- If you develop hives, difficulty breathing or swallowing, wheezing or similar symptoms of allergic reaction, SEEK MEDICAL ATTENTION IMMEDIATELY. People with known allergies to insect stings should NEVER work alone.
- A person with a history of severe allergic reaction to an insect sting may be advised by their physician to carry an insect sting allergy kit to counteract the allergic reaction whenever they may encounter stinging insects. Also they should consider wearing a medical ID bracelet and notify others on the field team.

5.5 Heat Stress

Heat and cold stress may vary based upon work activities, PPE/clothing selection, geographical locations, and weather conditions. To reduce the potential of developing heat/cold stress, be aware of the signs and symptoms of heat/cold stress and watch fellow employees for signs of heat/cold stress.

Heat stress can be a significant field site hazard, particularly for non-acclimated personnel operating in a hot, humid setting. Site personnel will be instructed in the identification of a heat stress victim, the first-aid treatment procedures for the victim and the prevention of heat stress casualties. Work-rest cycles will be determined and the appropriate measures taken to prevent heat stress as outlined in SH&E 616, *Heat Stress Prevention Program*.

5.5.1 Responding to Heat-Related Illness

The guidance below will be used in identifying and treating heat-related illness.

Identification and Treatment of Heat-Related Illness

Type of Heat-Related Illness	Description	First Aid
Mild Heat Strain	The mildest form of heat-related illness. Victims exhibit irritability, lethargy, and significant sweating. The victim may complain of headache or nausea. This is the initial stage of overheating, and prompt action at this point may prevent more severe heat-related illness from occurring.	• Provide the victim with a work break during which he/she may relax, remove any excess protective clothing, and drink cool fluids. • If an air-conditioned spot is available, this is an ideal break location. • Once the victim shows improvement, he/she may resume working; however, the work pace should be moderated to prevent recurrence of the symptoms.
Heat Exhaustion	Usually begins with muscular weakness and cramping, dizziness, staggering gait, and nausea. The victim will have pale, clammy moist skin and may perspire profusely. The pulse is weak and fast and the victim may faint unless they lie down. The bowels may move involuntarily.	• Immediately remove the victim from the work area to a shady or cool area with good air circulation (*avoid drafts or sudden chilling*). • Remove all protective outerwear. • Call a physician. • Treat the victim for shock. (*Make the victim lie down, raise his or her feet 6–12 inches, and keep him/her cool by loosening all clothing*). • If the victim is conscious, it may be helpful to give him/ her sips of water. • Transport victim to a medical facility ASAP.

5.6 Sun Exposure

Employees are encouraged to liberally apply sunscreen, with a minimum sun protection factor (SPF) of 15, when working outdoors to avoid sunburn and potential skin cancer, which is associated with excessive sun exposure to unprotected skin. Additionally, employees should wear safety glasses that offer protection from UVA/UVB rays.

5.7 Inclement Weather

Work is expected to begin in the summer of 2011 so it is therefore important to have a response plan in place that dictates what actions site employees will take in the event of severe weather, specifically severe thunderstorms.

When a severe thunderstorm is approaching, employees will only have a short amount of time to make important decisions. Employees do not have access to consistent and current news information via the television or radio when working in the field, especially in a river. To ensure the field team is alerted to the onset of severe weather, the project team will be issued a battery-operated National Oceanic and Atmospheric Administration (NOAA) weather radio. The radio will be equipped with an alarm that will automatically broadcast any pertinent information from NOAA's National Weather Service.

Via the radio, the team will be aware of any severe thunderstorm watches or warnings that have been issued for their work area by the National Weather Service. It is important for field team members to understand the difference between a "watch" and a "warning". If a severe thunderstorm watch is issued for your work or travel area, it means that a severe thunderstorm is possible. If a severe thunderstorm warning is issued, it means that a severe thunderstorm has actually been spotted or is strongly indicated on radar and it is time to seek safe shelter immediately.

The weather radio will be programmed to provide alerts to the county where the site is located. Additionally, employees should become familiar with the names of the counties through which they must travel when mobilizing/demobilizing from their assigned work location, in the event that a broadcast is issued for those counties.

If a severe thunderstorm watch is issued, employees must remain alert for approaching storms and review the procedures for seeking refuge in the event that a warning is issued. If a severe thunderstorm warning is issued, employees will **get off the water immediately** and take the following measures:

- If you hear thunder, you are close enough to a storm to be struck by lightning. Cease all work and seek shelter, either a sturdy building or car, immediately. Do not take shelter in small sheds, under isolated tress or in convertible automobiles. Avoid trees as they are targets for lightning. If in a car, keep the windows up.
- If you are caught outside during a thunderstorm and no shelter is available, find a low spot away from trees, fences and poles. Squat low to the ground on the balls of your feet, place your hands on your knees with head between them. Make yourself the smallest target possible and minimize your contact with the ground.

Any lightning safety plan should incorporate the 30/30 Rule. The 30/30 Rule states that people should seek shelter if the "Flash-To-Bang" delay (length of time in seconds between a lightning flash and its subsequent thunder), is 30 seconds or less, and that they remain under cover until 30 minutes after the final clap of thunder.

A 30 second lead time is necessary prior to a storm's arrival because of the possibility of distant strikes. A 30 minute wait after the last thunder is heard is necessary because the trailing storm clouds still carry a lingering charge. This charge can and does occasionally produce lightning on the back edge of a storm, several minutes after the rain has ended.

Studies have shown most people struck by lightning are struck not at the height of a thunderstorm, but before and after the storm has peaked. This shows many people are unaware of how far lightning can strike from its parent thunderstorm. DO NOT wait for the rain to start before seeking shelter, and do not leave shelter just because the rain has ended.

6.0 Physical Hazards and Controls

The general safety procedures in this HASP have been developed to address the hazards listed above. While every effort has been made to address the potential hazards that may be encountered during the implementation of the proposed activities, unanticipated site-specific conditions or situations may occur. Prior to site mobilization, THAs will be developed for each task to be executed during the proposed program.

6.1 Utility Clearance

Rhode Island law requires that a utility clearance be performed at least two (2) days prior to initiation of any subsurface work. AECOM will contact Call Before You Dig (811) to request a mark-out of natural gas, electric, telephone, cable television, water and sewer lines that may be present. Work will not begin until the required utility clearances have been performed.

Public utility clearance organizations typically do not mark-out underground utility lines that are located on private property. As such, AECOM must exercise due diligence and try to identify the location of any private utilities that may be buried. AECOM can fulfill this requirement in several ways, including:

- Obtaining as-built drawings for the areas being investigated from the property owners;
- Visually reviewing each proposed ground disturbance location with the property owner or knowledgeable site representative;
- Use a properly trained and competent third party utility locating service; and
- Physically locate the presence or absents of utilities of the purposed surface disturbance are by using the soft-digging (vacuum excavating) or hand digging to the required depth.
    - Where hand digging is performed a blunt-nosed shovel must be used to loosen the soil and a regular shovel to remove to remove it. Do not stab at the soil or use stomp on the shovel with both feet. A pickax, hand auger, digging bar or similar tools should not be used.

AECOM S3NA-417-PR Utilities, Underground establishes requirements to ensure that underground installations are identified properly before excavation work commences.

6.2 Drill Rigs

The hazards associated with drill rigs are caught by or between moving or rotating parts, struck by the movement of the drill rig or material being handled, contact with above ground and below ground utilities, and slips trips and falls on slippery surfaces, hose lines, and drilling material.

AECOM employees are not authorized to operate any type of mobile drill rig, and shall stay out of the path of travel of a drill rig and away from rotating and moving parts of a drill rig when it is operating. Specific requirements for drilling and boring can be found in S3NA-405-PR

Prior to drilling it is important and the law that underground utilities be identified by calling 811(see above Utilities Clearance) to have buried utilities identified and located. It is also important to identify aboveground utilities, such as electrical lines, cable television or telephone wires that may be in the vicinity of the proposed bore hole or path of travel of the drill rig. The minimum safe clearance distance from above ground utilities such as electrical wires is 15 feet.

- Except for the driller and helper, all personnel will stay away (e.g., 15+ ft) from the rig when it is operating unless it is necessary to be near it;

- If required to approach the drill rig for the collection of samples or down hole observations the drill rig must be taken out of gear to stop movement of boring tools. Only then can you approach the rig.
- Loose fitting clothing must be secured when in the vicinity of drilling operations.
- The drill rig operator shall perform a visual safety of the drill rig daily and after it has been moved to a new location;
- As necessary hearing protection shall be used when near drilling operations:
- Personnel should avoid walk through drilling mud, crossing over hoses and other drilling material; And
- Prior to the start of work, driller must demonstrate that the rig's emergency kill switch functions properly.

6.3 Back Safety

Using the proper techniques to lift and move sampling equipment is important to reduce the potential for back injury. The following precautions should be implemented when lifting or moving heavy objects.

- Use mechanical devices to move objects that are too heavy to be moved manually
- If mechanical devices are not available, ask another person to assist you.
- Bend at the knees, not the waist. Let your legs do the lifting.
- Do not twist while lifting
- Bring the load as close to you as possible before lifting
- Be sure the path you are taking while carrying a heavy object is free of obstructions and slip, trip and fall hazards.

6.4 Electrical Hazards

Potential electrical hazards include electric shock, electrocution, burns, fires, and explosion. Electrical cords used to carry electrical power pose a trip and fall hazards. The use of portable generator not alone poses an electrical hazard but also the hazard associated with exposure to carbon monoxide.

AECOM employees are not authorized to work on electrical equipment or near any part of an electrical circuit unless they are protected against shock by guarding or by de-energizing and grounding the circuit. Information on general electrical safety can be found in S3NA-302-PR and information on hazard energy control (lockout) is found in S3NA-410-PR

To prevent potential electrical incidents the following basic electrical practices must be followed at all times while working on this project.

- Only qualified electricians with full knowledge of the electrical code requirements will be allowed to perform electrical work.
- The use ground-fault circuit interrupters (GFCIs) are required on this project. Additionally, inspection and testing shall be conducted to locate defective electrical equipment, tools, and cords, which may expose personnel to electrical hazards.
- Temporary electrical cords must be rated for extra hard usage or hard usage and must be of the three-wire type with a grounding pin and a grounding receptacle. Look for the following letters on the cord: S, SJ, ST, or SO markings on the cord.
- Temporary electrical cords must be kept clear of walkways and other location where they may be exposed to damage or create a trip hazard.
- Inspect all electrical cords for signs of wear and exposed wiring, strain, and ripped, torn, cut or burned insulation. Defective cords shall be removed from service.

- Electrical tools and equipment must be grounded, of the double insulated or cordless type.
- All receptacles must be protected by a Ground Fault Circuit Interrupter (GFCI). Follow manufacturers' recommended testing procedure to insure GFCI is working correctly.
- Check the work area for overhead and underground electrical utilities. Employees must be protected from overhead hazards by meeting the guidelines listed below.
  - If the overhead power line is 50 kV or less, then stay at least 10 feet away. For everything else, keep at least 35 feet away. Contact the power company if power lines needed to be, moved, de-energized and grounded, or have insulated sleeves installed.
- In potentially hazardous environments electrical equipment must meet the National Electrical Code (NEC) classification for hazardous locations. Consult the RHSM for the proper type of equipment.
- When work is to be performed on electrical equipment, lockout procedures are required to ensure that the equipment is de-energized and isolated.
- Fuel generators before use and re-fuel only after the engine has been shut down and allowed to cool.
- Never use a portal generator indoors. Locate a generator so that the exhaust is downwind from your position or locations where carbon monoxide can enter (e.g. confined spaces, indoor locations etc.).

6.5 Falls

6.5.1 Same Level

Falls from slips and trips are common workplace occurrences that can result in serious injuries and disabilities. The most common types of falls: is falls at the same level. Fall hazards of exist in most workplaces including offices, manufacturing and construction. Slips and trips can be prevented by following these guidelines:

- Personnel shall be vigilant in providing clear footing, clearly identifying obstructions, holes, stick ups, or other tripping hazards and maintaining an awareness of uneven terrain and slippery surfaces.
- Walking and working surfaces shall be kept free of materials, obstructions, and substances that could cause a surface to become slick or otherwise hazardous.
- Makeshift substitute ladders such as toolboxes, buckets, and coolers shall not be used.
- The use of cellular telephones (testing, making or receiving calls) for personal use is prohibited in the work area.
- Walk around, not over or on, debris or equipment that might have been stored in the work area.
- Don't jump from platforms or truck beds.
- When carrying equipment, identify a path that is clear of any obstructions. It might be necessary to remove obstacles to create a smooth, unobstructed access point to the work areas on site.

6.6 Hand and Power Tools

Hazards associated with hand tools are cuts, lacerations, electrocution, and struck by flying objects. Frequent and prolonged use of hand tools can cause soreness, aches, pains, and fatigue, which, when ignored, can lead to chronic musculoskeletal injuries (MSIs). Additional information on hand tool safety can be found in S3NA-305-PR.

Many injuries have been caused by the use of fixed open blade knives such as a jack knife or box cutter. Cutting tools that can be used by AECOM employees for cutting include shears, snips, tubing cutters, ratchet type pipe cutters, side cutters, and retractable blade utility knife or concealed blade knife. The use of fixed opened blade knives is prohibited.

Basic safety rules can help prevent hazards associated with the use of hand tools:

- Use the right tool for particular work activity being conducted (e.g., don't use a file or a screwdriver as a pry bar);
- Examine each tool for damage before use (e.g., worn, splintered handles, etc.) and do not use damaged tools.
- Use properly the right personal protective equipment (e.g. eye protection, gloves, hearing protectors)
- Hold work in a clamp or vise, not in your hand
- Position your body securely while working with the tool
- Plastic covered tool handles are for comfort only, not protection from electrical current.
- Claw hammers are for driving and removing finishing and common, unhardened nails. Don't strike other steel tools such as chisels, punches or masonry nails with a claw hammer.
- When working with a wrench, always pull the wrench, never push the wrench.
- Discard any chisel or punch that is chipped or mushroomed.
- Don't use a screwdriver for prying, punching, chiseling, scoring or scraping. Screwdrivers should only be used to drive or remove screws.
- Never use an extension bar such as a length of pipe to increase leverage on a wrench. This could result in breakage of the wrench and personal injury.
- Select a wrench whose opening exactly fits the nut. Too large an opening can spread the jaws of a wrench. Too large a box- or socket wrench can mar or turn the corners of the nut. Exercise care in selecting inch wrenches for inch fasteners and metric wrenches for metric fasteners.
- Only spark-resistant tools made from brass, plastic, aluminum, or wood to should be used around flammable substances.
- For continuous work, use comfort grips or gloves, take frequent breaks, avoiding awkward positions, and consider using a power tool.

6.6.1 Power Tools

- Inspect power tools before use. Do not use defective power tools until repaired or replaced.
- Defective power tools shall be tagged OUT of SERVICE until repairs can be made.
- All guards originally supplied with power tools shall be in place when the tool is in use. Guards shall not be altered, modified, or defeated.
- Electrical tools and equipment must be grounded, of the double insulated or cordless type battery operated.
- Fuel-powered tools shall be stopped when refueled, serviced or maintained. Tools shall be allowed to cool down as necessary before refueling.

6.7 Housekeeping and Sanitation

Good housekeeping is a reflection on the employer, a sign of efficiency, and is fundamental to injury prevention. It shall be the responsibility of each employer to keep their work area clean of personal litter (e.g. food scraps, cups and cans), packaging and construction debris. Additional information on housekeeping can be found in S3NA-307-PR.

The housekeeping requirement for this project is as follows:

- Maintaining a work environment that is free from accumulated debris is the key to preventing slip, trip and fall hazards at construction sites. Essential elements of good housekeeping include
- Orderly placement of materials, tools and equipment,

- Placing trash receptacles at appropriate locations for the disposal of miscellaneous rubbish;
- Awareness on the part of all employees to walk around, not over or on, equipment that may have be stored in the work area
- Liquid spills must be controlled and cleaned up immediately by the first person to identify the wet condition.

The following personal hygiene requirements will be observed:

Water Supply: Potable water will be available for field personnel consumption. Potable water can be provided in the form of water bottles, canteens, or water coolers.

Restroom Facilities: Site personnel should identify restroom facilities located near the site. A vehicle will be made available to transport personnel to the restroom.

Hand Wash Facilities: Commercial towelettes or equivalent will be used for cleansing of hands or other body parts.

6.8 Noise Exposure

The use of construction equipment can expose the field team to noise levels that exceed the OSHA PEL of 90 dB for an 8-hour day. Since personal noise monitoring will not be conducted during the proposed activities, employees must follow this general rule of thumb: If the noise levels are such that you must shout at someone two (2) feet away from you, you need to be wearing hearing protection. Employees can wear either disposable earplugs or earmuffs but all hearing protection must have a minimum noise reduction rating (NRR) of 27 dB.

AECOM has a Hearing Conservation Program which can be found in S3NA-510-PR**.**

7.0 Safe Work Standards and Rules

As a minimum all employees are responsible for adhering to all AECOM safe work standards, rules, requirements and instructions presented below

7.1 Safe Work Practices

1. Perform all job duties in a responsible manner, following and complying with regulatory standards, AECOM safety policies, industry standards, work practices, guidelines, and project-specific requirements governing the scope of work.

2. Be aware of the job site conditions, work environments, client operations, contractor activities, and general public (if applicable) that may impact an employee or be impacted by or affected by one's work.

3. Work in a manner that will not put oneself, other personnel or equipment or facilities at risk.

4. Identify hazardous conditions and activities in the work environment consistent with the job and training.

5. If one cannot remove a hazard, it should be reported to the Project Manager promptly.

6. Implement established control methods consistent with project procedures and/or training.

7. Unsafe employee actions or behavior are prohibited.

8. Employees performing inspections, construction observations, investigations, reviews, surveys or visits to remote sites shall work in teams of a minimum of two persons present (buddy system), or an alternate communication plan must be provided (see S3NA-314-PR Working Alone & Remote Travel)

9. Work involving the removal, handling, storage or disposal of hazardous materials or wastes requires the approval of the appropriate SH&E Department representative. See S3NA-509-PR – Hazardous Waste Operations and Emergency Response (HAZWOPER).

10. Immediately report all potentially dangerous conditions and injuries, regardless of severity, to the Field Task Manager.

11. Report all accidents that result in medical treatment, AECOM equipment damage or near miss incidents to supervision immediately. See S3NA-004-PR – Incident Reporting.

7.2 Personal Standards

1. Any employee who willfully disregards AECOM or client safety standards, rules or requirements is subject to disciplinary action, including removal from the project and dismissal.

2. Carrying firearms or other weapons on AECOM or a client's property is prohibited.

3. Fighting and gambling are not permitted.

4. Be considerate of the safety and welfare of others. Distracting other's attention or engaging in practical jokes and horseplay is prohibited.

5. Employees are not permitted to use, sell or distribute, be under the influence, or have in their possession any controlled substances, drugs, or alcohol. The only exception is if an employee is taking prescription medication(s) under the direction of a physician. It is then the responsibility of the employee to notify one's Project Manager if the medication may impair their ability to perform their job function in a safe manner, in which case they shall be removed from that task.

6. Smoking is prohibited in any area specifically designated as "NO SMOKING" and in all AECOM facilities.

7. Be alert at all times. Obey safety signs, heed warning signs and instructions.

8. Report unsafe equipment, conditions, and actions or behavior to one's task leader or supervisor promptly.

9. Avoid back injuries by knowing one's capabilities, using proper lifting techniques, and seeking assistance when needed.

10. Employees should operate vehicles in a safe and conscientious manner (see S3NA-005-PR – Driver and Vehicle Safety).

11. All employees shall direct any questions or concerns they may have about the project Health and Safety Plan (HASP), job tasks, instructions or conditions to the Project Manager or RHSM.

7.3 General Safety Rules

1. Employees are required to practice "good housekeeping" when performing job tasks at all AECOM locations and offices. Such practices include overseeing that work areas are kept clean and organized; using approved cleaning materials for tools and equipment; proper packaging and disposal of waste materials including hazardous materials; and leaving a work area clean and orderly. This includes office work stations and occupancies.

2. One should plan work tasks before beginning work and consider any hazards that may exist and how to avoid them through proper work practices.

3. One should keep an eye out for and take care of one's "buddy" in the field.

4. Obey all warning signs (e.g., "Do Not Enter," "No Smoking," "Eye, Hearing or Respiratory Protection Required," "Permit Required Confined Space," "Authorized Personnel Only").

5. Do not jump from any elevated surface or platform, including truck beds, equipment and scaffolding.

6. Taking shortcuts leads to injury. Use appropriate ladders, platforms and stairs.

7. Do not block, deface or remove any signage, barricade or fencing without approval.

8. Keep passageways clean and clear of debris, materials, hoses, cords, and tripping obstructions. Items should be moved to low activity areas or overhead.

9. Permits may be required when performing non-routine tasks and work involving hazards. Seek advice from the Project Manager.

10. Use only designated sanitary facilities.

11. Be alert to work going on, around or above you including contractor activities and motoring public vehicles.

12. Be familiar with project emergency procedures. Report all emergency situations to the Project Manager immediately.

13. Read scaffolding tags before using scaffolds. Never use a red-tagged scaffold. Climbing on an incomplete scaffold (normally yellow tag) requires use of and tying off of fall protection devices.

14. Hand tools, electronic devices and equipment may not be used for any purpose other than their intended use. Damaged equipment and tools with worn part(s) shall be reported to a supervisor or task leader for repair or replacement.

15. Electric power tools must be properly grounded or double insulated. Electric power tools shall be Ground Fault Circuit Interrupter-protected when use in wet and exterior conditions.

16. Defective tools and equipment, frayed and ungrounded electrical cords and unguarded tools and machinery shall not be used. Report same to the Project Manager.

17. Employees shall not remove floor covering, guard rails, or other working surfaces from any floor or perimeter side opening without approval by the Project Manager.

18. Defective or unsecured ladders shall not be used.

19. Employees shall not ascend or descend a ladder without free use of both hands while facing the ladder.

7.4 Safety Equipment Rules

1. Always wear assigned safety equipment and Personal Protective Equipment (PPE).

2. Always use protective equipment in accordance with manufacturer's instructions and AECOM training and procedures.

3. All AECOM employees, subcontractors, subconsultants, visitors, and vendors shall wear a hard hat, high visibility vest, sturdy work boots and eye protection on construction projects. Other personal protective equipment may be required based on the nature of the work. (See S3NA-208-PR Personal Protective Equipment).

4. Wear clothing suitable for the work being performed. Minimum attire consists of long pants and shirt with a minimum 4-inch sleeve, tank tops are not permitted unless otherwise specified in SH&E SOP S3NA-313-PR Wildlife, Plants and Insects

5. Hearing protection devices shall be used when exposed to elevated noise levels.

6. Respirator use may be required in areas where dust, gas or fumes exist. Consult the Project Manager or the RHSM for guidance.

7. Fall protection equipment is required for all work with a fall exposure greater than six (6) feet on any elevated structure or aerial platform including structural steel, incomplete work platforms, scaffolding, open surface work and aerial lifts.

8. Modification or alteration of any safety equipment is prohibited as it changes the equipment's design strength and manufacturer's certifications.
9. PPE use shall be consistently enforced in accordance with rules established for the project and federal and state safety regulations.

7.5 Work Ergonomic Rules

1. Use proper methods to perform all job functions so as to minimize the risk of physical injury.

2. Take reasonable precautions when lifting heavy or large objects that could cause back injury or hernia.

3. Do not exceed one's capability and strength. Seek assistance.

4. Make suitable adjustments to one's workstation including office furniture, chair, keyboard platform, computer monitor for comfort, equipment and work.

5. Avoid routine, repetitive motion hand activities. Integrate varying motions and body parts.

6. Change work routines e.g., phones, typing, files. Stretch and take mini-breaks.

7.6 Hazardous Waste Site Rules

1. The "buddy system" will be used at all times by all field personnel. If an employee will be alone in a work area, or an alternate communication plan must be developed (see S3NA-314-PR – Working Alone).

Subcontractors working on-site with AECOM employees can help fulfill the role of a Buddy while site activities are occurring.

2. Eating, drinking, chewing gum or tobacco, smoking or any practice that increases the probability of hand-to-mouth transfer and ingestion of materials is prohibited in the immediate work area and the decontamination zone. Water and Ice may be consumed in all areas to prevent heat stress but precautions must be taken to prevent contamination of the water and ice.
3. Smoking is prohibited in all work areas. Matches and lighters are not allowed in these areas.
4. Hands and face must be thoroughly washed upon leaving the work area and before eating, drinking or any other activities.
5. Beards or other facial hair that interfere with respirator fit are prohibited.
6. All equipment must be decontaminated or properly discarded before leaving the site in accordance with the project work plan.
7. Avoid contact with potentially contaminated substances or materials. Do not walk through puddles, pools, mud, or handle soils without protective gloves, etc. Avoid, whenever possible, kneeling on the ground, leaning or sitting on equipment or the ground. Do not place monitoring equipment on potentially contaminated surfaces (e.g., ground, etc.)
8. Field personnel will perform only those tasks which they are qualified to perform.

8.0 Air Monitoring

8.1 Monitors

It is recommended that an air monitoring device be dedicated on-site for the purpose of monitoring worker exposure. Measurements taken will be captured in field note books and used to document the level of exposure.

8.1.1 Photoionization Detector

As a precautionary measure, a Photoionization Detector (PID) with a 10.6 ev lamp will be used to monitor the breathing zone of personnel during the proposed activities. If the PID indicates sustained (5 minute) breathing zone vapor concentrations in excess of 5 ppm above background as isobutylene, respiratory protection, as described in Section 9.1 of this document, will be donned.

Task	Instrument	Action Limit and Action
All tasks involving potential exposure to contaminated sediment or water	Photoionization Detector	**5 ppm above background as isobutylene**; Don respiratory protection as discussed in Section 9.1

8.2 Personal Air Sampling

The need for personal air sampling is not anticipated by AECOM during the activities covered by this HASP. The AECOM Project Manager, or the AECOM RSM can prescribe personal air sampling based on observations or concerns recognized during the project.

8.3 Calibration and Recordkeeping

Equipment used by AECOM will be calibrated in accordance with AECOM's standard operating procedures. A log of the calibrations and readings will be kept in the field notebook. Daily calibration information will also be recorded in the field notebook.

9.0 Personal Protective Equipment

The purpose of personal protective equipment (PPE) is to provide a barrier, which will shield or isolate individuals from the chemical and/or physical hazards that may be encountered during work activities. *S3NA-208-PR Personal Protective Equipment Program* lists the general requirements for selection and usage of PPE. Table 9-1 lists the minimum PPE required during site operations and additional PPE that may be necessary. The specific PPE requirements for each work task are specified in the individual THAs.

Table 9-1: Personal Protective Equipment

TYPE	MATERIAL	ADDITIONAL INFORMATION
Minimum PPE		
Safety Vest	ANSI Type II high-visibility	In close proximity to moving traffic and other modes of transportation (transit, airlines, marine, etc.), in proximity to heavy equipment operations
Boots	ANSI approved safety toe	Working in areas where there is a danger of foot injuries from falling and rolling objects or from objects piercing the sole
Safety Glasses	ANSI Approved; ≥98% UV protection	
Hard Hat	ANSI Approved;	Required when employees are working in areas where there is a potential for falling objects to cause injury to the head.
Work Uniform		No shorts/cutoff jeans or sleeveless shirts
Hearing Protection	Ear plugs and/ or muffs	In hazardous noise areas
Chemical Resistant Coveralls	Tyvek QC if splash is anticipated Tyvek- no splash	Use of protective coverall or rain suits may cause increase the chances of developing heat stress. Aprons maybe used if heat stress is likely
Protective Chemical Gloves	Inner: Nitrile Outer: Heavy Nitrile	Leave area immediately if gloves become ripped or show signs of swelling or melting. Wash hands after removing gloves
Sunscreen	SPF 30 or higher	

9.1 Respiratory Protection

Respiratory protection will be used as indicated by the Action Levels as found in Section 8.0. In addition, respiratory protection should also be donned if odors become objectionable at any time or if respiratory tract irritation is notice.

Respiratory protection specification is as follows:

- Half-mask air-purifying respirator with combination organic vapor cartridges /N-100 dust filter
- Cartridge change out after daily use or immediately if breakthrough is perceived.

AECOM has developed a Respiratory Protection Program in accordance with the requirements of 29 CFR 1910.134. Specific requirements can be found in AECOM S3NA-519-PR, Respiratory Protection Program.

If Level C respiratory protection is required documentation of being fit to wear an air purifying respirator, as well as documentation of passing of a respirator fit test within the last 12 months.

Users of an air-purifying respirator shall perform a seal check (positive and negative check) to ensure that an adequate seal is achieved each time the respirator is put on. Instruction for performing a seal check is found in S3NA-519-PR.

If worn, respirators will be cleaned after each use with respirator wipe pads and will be stored in plastic bags after cleaning. Respirators will be thoroughly cleaned using disinfectant material within one week following use. Refer to the cleaning instructions provided with the respirator or specified, AECOM S3NA-519-PR, Respiratory Protection Program.

9.2 Other Safety Equipment

The following additional safety items should be available in each boat:

- Portable, hand-held eyewash bottles
- Cell phone and, if available, two-way radio on facility frequency,
- Emergency air horn,
- Drinking water, ice and cups,
- First Aid Kit
- Fire Extinguisher

10.0 Site Control

10.1 General

The purpose of site control is to minimize potential contamination of workers, protect the public from site hazards, and prevent vandalism. The degree of site control necessary depends on the site characteristics, site size, and the surrounding community.

Controlled work areas will be established at each work location, and if required, will be established directly prior to the work being conducted. Diagrams designating specific controlled work areas will be drawn on site maps, posted in the support vehicle or trailer and discussed during the daily safety meetings. If the site layout changes, the new areas and their potential hazards will be discussed immediately after the changes are made. Controlled Work Areas

10.2 Controlled Work Area

Each HAZWOPER controlled work area will consist of the following three zones:

- Exclusion Zone: Contaminated work area.
- Contamination Reduction Zone: Decontamination area.
- Support Zone: Uncontaminated or “clean area” where personnel should not be exposed to hazardous conditions.

10.2.1 Exclusion Zone

Each zone will be periodically monitored in accordance with the air monitoring requirements established in this HASP. The Exclusion Zone and the Contamination Reduction Zone are considered work areas. The Support Zone is accessible to the public (e.g., vendors, inspectors).

The Exclusion Zone is the area where primary activities occur, such as sampling, remediation operations, installation of wells, cleanup work, etc. This area must be clearly marked with hazard tape, barricades or cones, or enclosed by fences or ropes. Only personnel involved in work activities, and meeting the requirements specified in the applicable THA and this HASP will be allowed in an Exclusion Zone.

The extent of each area will be sufficient to ensure that personnel located at/beyond its boundaries will not be affected in any substantial way by hazards associated with sample collection activities.

All personnel should be alert to prevent unauthorized, accidental entrance into controlled-access areas (the Exclusion Zone and Contamination Reduction Zone). If such an entry should occur, the trespasser should be immediately escorted outside the area, or all HAZWOPER-related work must cease. All personnel, equipment, and supplies that enter controlled-access areas must be decontaminated or containerized as waste prior to leaving (through the Contamination Reduction Zone only).

10.2.2 Contamination Reduction Zone

The Contamination Reduction Zone is the transition area between the contaminated area and the clean area. Decontamination is the main focus in this area. The decontamination of workers and equipment limits the physical transfer of hazardous substances into the clean area. This area must also be clearly marked with hazard tape and access limited to personnel involved in decontamination.

10.2.3 Support Zone

The Support Zone is an uncontaminated zone where administrative and other support functions, such as first aid, equipment supply, emergency information, etc., are located. The Support Zone shall have minimal potential for significant exposure to contaminants (i.e., background levels).

Employees will establish a Support Zone (if necessary) at the site before the commencement of site activities. The Support Zone would also serve as the entry point for controlling site access.

10.3 Site Accountability

If implemented by the PM, all personnel entering the site shall complete the “Site Entry/Exit Log” located at the site trailer or primary site support vehicle.

10.4 Decontamination

Proper decontamination is required of all personnel before leaving the exclusion zone. Decontamination will occur within the contamination reduction zone. Personal decontamination stations will be erected at the designated entry/exit points by the subcontractor. The following information is to provide personnel with helpful hints that, when applied, make donning and doffing of PPE a more safe and manageable task:

- Never cut disposable booties from your feet with basic utility knives. This has resulted in workers cutting through the booty and the underlying sturdy leather work boot, resulting in significant cuts to the legs/ankles. Recommend using a pair of scissors or a package/letter opener (cut above and parallel with the work boot) to start a cut in the edge of the booty, then proceed by manually tearing the material down to the sole of the booty for easy removal.
- When applying duct tape to PPE interfaces (wrist, lower leg, around respirator, etc.) and zippers, leave approximately one inch at the end of the tape to fold over onto itself. This will make it much easier to remove the tape by providing a small handle to grab while still wearing gloves. Without this fold, trying to pull up the tape end with multiple gloves on may be difficult and result in premature tearing of the PPE.
- Have a “buddy” check your ensemble to ensure proper donning before entering controlled work areas. Without mirrors, the most obvious discrepancies can go unnoticed and may result in a potential exposure situation.
- Never perform personal decontamination with a pressure washer.

10.5 PPE Decontamination

Disposable PPE, such as Tyvek coveralls, gloves, etc. will be removed in the contamination reduction zone and placed in receptacles provided by the subcontractor for final disposal. If worn, respirators assigned to an individual will be cleaned after each use with respirator wipe pads and will be stored upright in plastic bags.

10.6 Equipment Decontamination

Nearly all contractor hardware (not consumable) is considered to be recoverable. As such, they will be decontaminated using the proper equipment, (i.e. brushes, sprayers, detergent and, if necessary, other appropriate solvents). Large heavy equipment will be decontaminated with pressure steam wash as required. The decontamination area for vehicles and equipment leaving the Exclusion Zone will be located within the Contamination Reduction Zone. Equipment will be decontaminated over 2 layers of 6-mil plastic placed on the ground. Scrapers and brushes will be used to remove gross contamination prior to final decontamination. A pressure washer or steam cleaner will be used for the final cleaning and decontamination of the equipment. The combination of dry removal with the brushes and use of the pressure washer or steam cleaner will minimize the generation of contaminated liquid. All solids and liquids will be collected for disposal. Efforts will be made to minimize soil (even non-contaminated soil) from being tracked off-site. Dirt and mud will be removed from trucks and vehicles leaving the Site to the extent practicable.

10.7 Investigation Derived Wastes

Investigation-derived waste (IDW), chiefly soil from the field screening and groundwater from limited well development, if necessary, will be generated over the course of the field investigation. IDW will be containerized, characterized, and handled appropriately. IDW disposal will be completed per BASF requirements, if any. This scope of work assumes that 7 drums of non-hazardous soil and 1 drum of non-hazardous groundwater will be generated, that is non-TSCA waste.

11.0 Medical Monitoring and Training Requirements

11.1 Medical Monitoring

All personnel performing activities covered by this HASP must be active participants in a medical monitoring program that complies with 29 CFR 1910.120(f). Each individual must have completed an annual surveillance examination and/or an initial baseline examination within the last year prior to performing any work on the site covered by this HASP.

11.2 Health and Safety Training

11.2.1 HAZWOPER

All personnel performing activities covered by this HASP must have completed the appropriate training requirements specified in 29 CFR 1910.120 (e). Each individual must have completed an annual 8-hour refresher training course and/or initial 40-hour training course within the last year prior to performing any work on the sites covered by this HASP.

11.2.2 First Aid/CPR

At least one member of the sediment sampling team must be currently trained in First Aid and CPR.

11.3 Site-Specific Safety Training

Prior to the commencement of project activities, a site orientation will be conducted to review the specific requirements of HASP, applicable site rules, PPE requirements, emergency procedures, etc. Attendance at the pre-entry meeting is mandatory for all personnel covered by this HASP and must be documented on the attendance form provided in Attachment A. All documentation should be maintained in the project file.

All AECOM personnel performing activities at the site will be trained in accordance with *S3NA-003-PR SH&E Training.* All personnel are required to remain current in all of their required training and evaluate their need for additional training when there is a change in work

11.4 Tailgate Meetings

Prior to the commencement of daily project activities, a tailgate meeting will be conducted by the SSO to review the specific requirements of this HASP. Attendance at the daily tailgate meeting is mandatory for all employees at the site covered by this HASP and must be documented on the attendance form. All safety training documentation is to be maintained in the project file by the SSO.

12.0 Emergency Response

OSHA defines emergency response as any "response effort by employees from outside the immediate release area or by other designated responders (i.e., mutual-aid groups, local fire departments, etc.) to an occurrence which results, or is likely to result in an uncontrolled release of a hazardous substance. AECOM personnel shall not participate in any emergency response where there are potential safety or health hazards (i.e., fire, explosion, or chemical exposure). AECOM response actions will be limited to evacuation and medical/first aid as described within this section below. As such this section is written to comply with the requirements of 29 CFR 1910.38 (a).

The basic elements of an emergency evacuation plan include:

- Employee training,
- Alarm systems,
- Escape routes,
- Escape procedures,
- Critical operations or equipment,
- Rescue and medical duty assignments,
- Designation of responsible parties,
- Emergency reporting procedures and
- Methods to account for all employees after evacuation.

12.1 Employee Training

Employees must be instructed in the site-specific aspects of emergency evacuation. On-site refresher or update training is required anytime escape routes or procedures are modified or personnel assignments are changed.

12.2 Alarm System/Emergency Signals

An emergency communication system must be in effect at all sites. The simplest and most and effective emergency communication system in many situations will be direct verbal communications. Each site must be assessed at the time of initial site activity and periodically as the work progresses. Verbal communications must be supplemented anytime voices cannot be clearly perceived above ambient noise levels (i.e., noise from heavy equipment; drilling rigs, backhoes, etc.) and anytime a clear line-of-sight cannot be easily maintained amongst all AECOM personnel because of distance, terrain or other obstructions.

Verbal communications will be adequate to warn employees of hazards associated with the immediate work area. The property is un-occupied and AECOM will not have access to facility phones. Therefore, AECOM will bring a portable phone to the site to ensure that communications with local emergency responders is maintained, when necessary.

12.3 Escape Routes and Procedures

The escape route from the site and an emergency muster point will be determined and provided to all workers during the project mobilization.

12.4 Employee Accounting Method

The AECOMs on site team leader is responsible for identifying AECOM personnel on-site at all times. AECOM personnel will notify the subcontractors SSO when they enter and leave the site. The team leader will account for all AECOM personnel following an evacuation.

12.5 Release of Oil or Hazardous Materials

Release of oil or hazardous material may result from equipment failure, refueling equipment or from hazardous material associated with the work activities. Procedure outlined below will be used to prevent or contain a release:

- Equipment must be inspected for fluid leakage prior to being mobilized and daily thereafter.
- Only Type I or Type II safety cans shall be used. All safety cans shall be equipped with a dispensing funnel or hose, and each container shall be clearly labeled.
- All hazardous material will be stored in appropriate containers that are properly labeled
- Containers of hazardous materials will be stored appropriately away from moving equipment.
- At least one spill response kit, to include an appropriate empty container, materials to allow for booming or diking the area to minimize the size of the spill, and appropriate clean-up material (i.e., Speedy-dry) shall be available at each work site (more as needed).

The response for a release of potentially hazardous material entails the following:

- Determine the nature of the substance released.
- Eliminate all sources of ignition.
- Isolate the affected area or initiate area evacuation.
- Contain the flow of the material from the source if this can be done safely.
- Following the procedures and using the protective equipment as indicated by the Material Safety Data Sheet (MSDS), contain the release to the smallest area possible and initiate cleanup.
- Dispose of all residues in accordance with the MSDS.
- Notify the project manager and RSHE manager

Release of oil or hazardous material must be reported to the Project Manager. At this time a determination will be made by the Project Manager to notify the RI Department of Environmental Protection and the National Response Center.

12.6 Injuries and Illnesses

The phone numbers of the police and fire departments, ambulance service, local hospital, and AECOM representatives are provided in the emergency reference sheet Table 12.2. This sheet will be posted in the site vehicle.

12.6.1 First Aid

Minor injuries will be treated on site using materials from the first aid kit or other local sources. All cuts and abrasions will be cleaned with potable water and a clean dressing applied. The injured employee will be evaluated at the end of the work day and the following day when the employee arrives at the project site to determine whether the wound has started the healing process. The wound will be protected from contamination during the project activities.

12.6.2 Professional Treatment

In the event of a non-critical injury, and once preliminary reporting been completed, if the injured employee desires/needs to speak with a medical professional to consult on the nature of their injury and treatment options, employees should contact the RSH&E Manager who will contact WorkCare(888-449-7787). Once contacted, WorkCare will make direct contact with the employee.

Once the injury has been reported, seek treatment at the identified non-critical care, i.e. injuries of the First Aid variety facility indicated below

Concentra Urgent Care
Warwick Mall
400 Bald Hill Road
Warwick, RI 02886
Phone: (401) 737-4420

12.7 Incident Reporting and Investigation

Any incident resulting in injury, illness or property damage requires an incident investigation and report. The investigation should be conducted as soon as emergency conditions are under control. The purpose of the investigation is not to attribute blame but to determine the pertinent facts so that repeat or similar occurrences can be avoided. An AECOM Incident investigation form is presented in Attachment D of this HASP. The injured AECOM employee's supervisor, the AECOM Project Manager, and the RSHEM should be notified immediately of the injury.

Table 12-1: Emergency Contacts

Emergency Coordinators / Key Personnel			
Name	**Title/Workstation**	**Telephone Number**	**Mobile Phone**
Joanne Lynch	Project Manager	978-905-2296	978-496-0589
Rich Michalewich	Office Manager Soil Investigation Supervisor	978-274-5685	508-817-6570
Tim Markey	Groundwater Supervisor	978-905-2306	978-239-0638
Phil Platcow	Regional SH&E Manager	617-899-5403	617-899-5403
Michael Grasso	District SH&E Manager	607-282-0175	
Incident Reporting	Incident Reporting Line	(800) 348-5046	

Organization / Agency	
Name	**Telephone Number**
Police Department (local)	911
Fire Department (local)	911
Ambulance Service ***(EMT will determine appropriate hospital for treatment)***	911
Emergency Hospital ***(Use by site personnel is for emergency cases only)***	
Rhode Island Hospital 593 Eddy Street Providence, RI 02903 (401) 444-4000 See Figure 12-2	
WorkCare: 24-hr On-Call Occupational Nurse (***Non-Emergency assistance only – Employees must notify SH&E prior to calling***)	(800) 455-6155
Poison Control Center	(800) 222-1222
RI DEP Spill Reporting Line	(401) 222-3070
Any such report shall include, but not be limited to: a. The location, the quantity, and the type of substance, material, or waste. b. The date and the cause of the discharge, spillage, uncontrolled loss, seepage, or filtration. c. The name and address of the owner of the ship, boat, barge, or other vessel, terminal, establishment, vehicle, trailer, or machine. d. The name and address of the person making the report and relationship to the owner	
National Response Center	(800) 424-8802

Public Utilities	
Name	**Telephone Number**
DigSafe	811

12.8 Route to Occupational Clinic

Concentra Urgent Care
Warwick Mall
400 Bald Hill Road
Warwick, RI 02886
Phone: (401) 737-4420

Total Est. Time: 13 minutes **Total Est. Distance:** 8.1 miles

When using any driving directions or map, it's a good idea to do a reality check and make sure the road still exists, watch out for construction, and follow all traffic safety precautions. This is only to be used as an aid in planning

180 Mill St
Cranston, RI 02905

1. Head **north** on **Mill St** toward **Astle St** — 0.3 mi
2. Turn left onto **Park Ave** — 0.3 mi
3. Merge onto **RI-10 N** via the ramp to **I-95** — 0.8 mi
4. Take the exit onto **I-95 S** toward **Warwick** — 5.2 mi
5. Take exit **12B** to merge onto **RI-113 W/East Ave** — 1.0 mi
6. Turn right onto **Bald Hill Rd**
   Destination will be on the right — 0.5 mi

400 Bald Hill Rd
Warwick, RI 02886

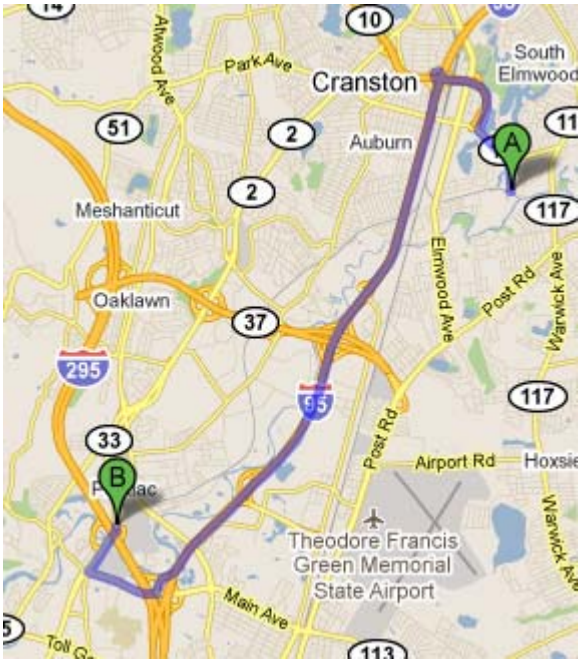

12.9 Route to Hospital

Once the injury has been reported, seek treatment at the identified hospital for all injuries (critical and non-critical).

Rhode Island Hospital
593 Eddy Street
Providence, RI 02903
(401) 444-4000

Driving distance is approximately 4.8 miles; driving time is approximately 11 minutes.

180 Mill St
Cranston, RI 02905

1. Head **north** on **Mill St** toward **Astle St**
0.3 mi

2. Turn right onto **Park Ave**
0.5 mi

3. Slight left onto **Warwick Ave**
0.4 mi

4. Slight left onto **Broad St**
1.3 mi

5. Slight right onto **Prairie Ave**
1.1 mi

6. Turn right onto **Dudley St**
Destination will be on the left
0.4 mi

Rhode Island Hospital
Providence, RI 02903

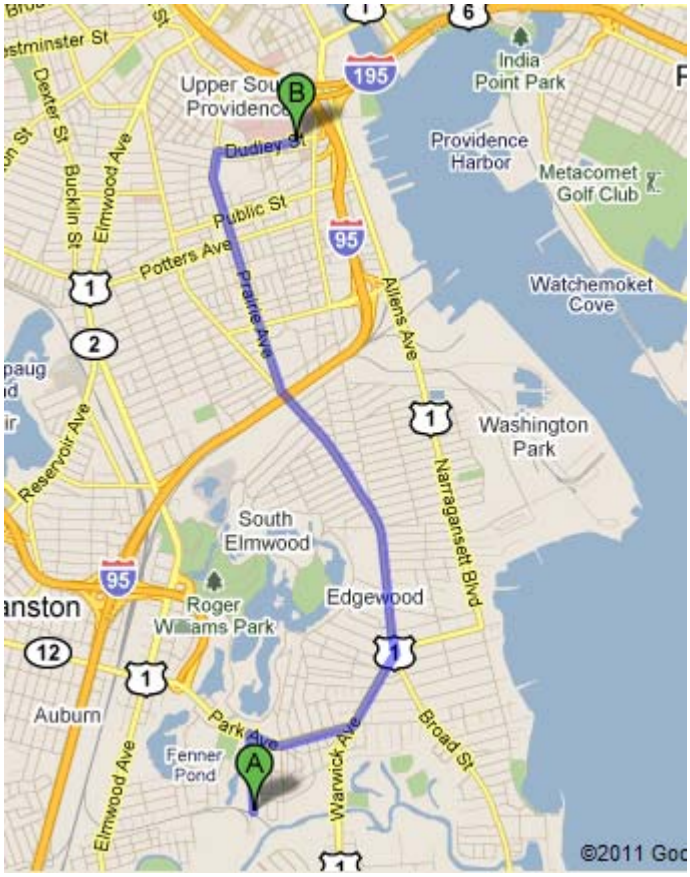

When using any driving directions or map, it's a good idea to do a reality check and make sure the road still exists, watch out for construction, and follow all traffic safety precautions. This is only to be used as an aid in planning

Appendix A

Health and Safety Plan Receipt and Acceptance Form

- Use the right tool for particular work activity being conducted (e.g., don't use a file or a screwdriver as a pry bar);
- Examine each tool for damage before use (e.g., worn, splintered handles, etc.) and do not use damaged tools.
- Use properly the right personal protective equipment (e.g. eye protection, gloves, hearing protectors)
- Hold work in a clamp or vise, not in your hand
- Position your body securely while working with the tool
- Plastic covered tool handles are for comfort only, not protection from electrical current.
- Claw hammers are for driving and removing finishing and common, unhardened nails. Don't strike other steel tools such as chisels, punches or masonry nails with a claw hammer.
- When working with a wrench, always pull the wrench, never push the wrench.
- Discard any chisel or punch that is chipped or mushroomed.
- Don't use a screwdriver for prying, punching, chiseling, scoring or scraping. Screwdrivers should only be used to drive or remove screws.
- Never use an extension bar such as a length of pipe to increase leverage on a wrench. This could result in breakage of the wrench and personal injury.
- Select a wrench whose opening exactly fits the nut. Too large an opening can spread the jaws of a wrench. Too large a box- or socket wrench can mar or turn the corners of the nut. Exercise care in selecting inch wrenches for inch fasteners and metric wrenches for metric fasteners.
- Only spark-resistant tools made from brass, plastic, aluminum, or wood to should be used around flammable substances.
- For continuous work, use comfort grips or gloves, take frequent breaks, avoiding awkward positions, and consider using a power tool.

6.6.1 Power Tools

- Inspect power tools before use. Do not use defective power tools until repaired or replaced.
- Defective power tools shall be tagged OUT of SERVICE until repairs can be made.
- All guards originally supplied with power tools shall be in place when the tool is in use. Guards shall not be altered, modified, or defeated.
- Electrical tools and equipment must be grounded, of the double insulated or cordless type battery operated.
- Fuel-powered tools shall be stopped when refueled, serviced or maintained. Tools shall be allowed to cool down as necessary before refueling.

6.7 Housekeeping and Sanitation

Good housekeeping is a reflection on the employer, a sign of efficiency, and is fundamental to injury prevention. It shall be the responsibility of each employer to keep their work area clean of personal litter (e.g. food scraps, cups and cans), packaging and construction debris. Additional information on housekeeping can be found in S3NA-307-PR.

The housekeeping requirement for this project is as follows:

- Maintaining a work environment that is free from accumulated debris is the key to preventing slip, trip and fall hazards at construction sites. Essential elements of good housekeeping include
- Orderly placement of materials, tools and equipment,

Attachment B

Job Safety Analysis Forms

Attachment C

Daily Tailgate Form

S3NA-210-FM Tailgate Safety Meeting Log

This sign-in log documents the topics of the tailgate safety briefing and individual attendance at the briefing. Personnel who perform work operations onsite are required to attend each safety briefing and acknowledge their ability to ask questions and receipt of such briefings daily. Please provide a brief narrative of the following topics as applicable to the Project.

Name of Meeting Leader	**Signature**

PROJECT NAME & LOCATION

PROJECT NO.	**DATE/TIME**	**WEATHER CONDITIONS**

TOPIC
Discussion – check one

Today's Scope of Work (All tasks)	☐ yes	☐ n/a	Access / Egress / Slips, Trips, & Falls	☐ yes	☐ n/a
Schedule / New Work / Scope Changes	☐ yes	☐ n/a	Smoking, Eating, & Drinking	☐ yes	☐ n/a
Reviewed Procedures, THA, etc.	☐ yes	☐ n/a	Washroom / Facilities Location	☐ yes	☐ n/a
Emergency Action Plan & Procedures	☐ yes	☐ n/a	Heat/Cold Stress	☐ yes	☐ n/a
Communications Protocol	☐ yes	☐ n/a	Exclusion Areas Barricades / Cones	☐ yes	☐ n/a
Required PPE	☐ yes	☐ n/a	Required Permits, Passes, Keys, etc.	☐ yes	☐ n/a
Required Monitoring / Instruments	☐ yes	☐ n/a	Decon Procedures / IDW Mgmt.	☐ yes	☐ n/a
Site Control / Work Zones / Security	☐ yes	☐ n/a	Eqpmt. Inspections/Safety Checklists	☐ yes	☐ n/a

COMMENTS/OTHER

Tailgate Meeting Attendees

Print Name	**Signature**

Attachment D

Supervisor's Report of Incident Form

S3NA-004-FM1
SUPERVISOR'S REPORT OF INCIDENT

AECOM

1. SEEK IMMEDIATE MEDICAL ATTENTION IF NECESSARY
2. EMPLOYEE MUST REPORT ALL INCIDENTS TO THEIR SUPERVISOR IMMEDIATELY.
3. REPORT THE INCIDENT TO THE APPROPRIATE INCIDENT REPORTING LINE. **(800) 348-5046**

ORGANIZATION INFORMATION

REGION: ☐ CAN-EAST ☐ CAN-CENTRAL ☐ CAN-WEST ☐ MID-ATLANTIC ☐ MIDWEST ☐ NORTHEAST ☐ South ☐ WEST

DISTRICT:

PROJECT NUMBER:

BUSINESS LINE: ☐ AECOM CORP ☐ CONSTRUCTION SERVICES ☐ ENERGY&POWER ☐ ENVIRONMENT ☐ PDD ☐ TRANSPORTATION ☐ WATER

CLIENT NAME:	**PROJECT NAME:**

ADMINISTRATIVE

EMPLOYEE NAME:	**EMPLOYEE NUMBER:**
WORK PHONE:	**CELL PHONE:**
EMPLOYEE STATUS ☐ FULL TIME ☐ PART TIME ☐ SUB ☐ TEMP AGENCY ☐ THIRD PARTY	**HOME OFFICE ADDRESS:** **JOB TITLE:**

DESCRIPTION OF EVENT

TYPE OF OCCURRENCE: ☐ INJURY/ILLNESS ☐ PROPERTY DAMAGE ☐ ENV DAMAGE/SPILL ☐ REGULATORY INSPECTION ☐ MOTOR VEHICLE ACCIDENT ☐ BOATING INCIDENT ☐ NOV/CITATION ☐ REPUTATIONAL (AECOM, CLIENT, OTHER)

DATE OF INCIDENT:	**TIME OF INCIDENT:**
DATE REPORTED TO SUPERVISOR:	**TIME REPORTED TO SUPERVISOR:**
INCIDENT ADDRESS/LOCATION:	**CITY:**
STATE/PROVINCE/TERRITORY:	**ZIP/POSTAL CODE:**

WERE THERE ANY SUBCONTRACTORS, WITNESSES OR OTHER PERSONS INVOLVED: ☐ YES ☐ NO

IF YES, PLEASE PROVIDE DETAILS TO INCLUDE NAMES AND CONTACT INFORMATION

S3NA-004-FM1
SUPERVISOR'S REPORT OF INCIDENT

AECOM

PERSONAL INJURY

TYPE OF INJURY: ☐ FIRST AID (TREATED ON-SITE) ☐ MEDICAL AID (TREATED BY PROFESSIONAL) ☐ FATALITY

DESCRIBE THE INJURY AND BODY PART AFFECTED:

WAS A DOCTOR OR HOSPITAL VISITED? ☐ **YES** ☐ **NO**	**IF YES, WHEN:**
MEDICAL RECEIVED:	**DOCTOR/HOSPITAL NAME:**
PROVIDER ADDRESS:	**PHONE NUMBER:**

PROPERTY DAMAGE **(COMPLETE FOR PROPERTY DAMAGE ONLY**

TYPE OF DAMAGE: ☐ AECOM PROPERTY ☐ MOTOR VEHICLE (COMPLETE MVA REPORT PAGE 3)

☐ SPILL OR RELEASE OF A HAZARDOUS SUBSTANCE ☐ MAJOR STRUCTURAL FAILURE ☐ CLIENT, SUBCONTRACTOR, OTHER:

DESCRIBE THE SPECIFIC DAMAGE, STRUCTURAL FAILURE OR HAZARDOUS RELEASE:

RANK THE SEVERITY OF THE DAMAGE: ☐ MINOR ☐ SERIOUS ☐ MAJOR

WHERE CAN THE PROPERTY BE SEEN?

PROPERTY OWNER NAME: **CONTACT INFORMATION:**

IS THERE ANY POTENTIAL FOR CIVIL, CRIMINAL OR REGULATORY LIABILITY AGAINST AECOM OR AN EMPLOYEE? ☐ **YES** ☐ **NO**

IF YES, DISCUSS WITH AECOM REGIONAL COUNSEL BEFORE PROCEEDING WITH ANY FURTHER REPORTING.

INDICATE WHO HAS BEEN NOTIFIED OF THE EVENT (E.G., OWNER/OPERATOR, STATE (US) OR GOVERNING BODY OF LABOUR, ETC?

EMPLOYEE DESCRIPTION OF INCIDENT:

What, when, where, why, how? Attached notes/diagrams as required and list any machinery or equipment involved.

ON-SITE/CORRECTIVE ACTIONS

INCIDENT IMMEDIATELY REPORTED ON-SITE TO:

WHAT CORRECTIVE ACTIONS WERE IMMEDIATELY IMPLEMENTED ON-SITE?

WHAT LONG-TERM OR PERMANENT CORRECTIVE ACTIONS ARE RECOMMENDED?

ACKNOWLEDGEMENTS

S3NA-004-FM1
SUPERVISOR'S REPORT OF INCIDENT

AECOM

EMPLOYEE PRINTED NAME AND PHONE	**SIGNATURE AND DATE**
SUPERVISOR REVIEW OF INCIDENT:	
SUPERVISORS PRINTED NAME AND PHONE	**SIGNATURE AND DATE**
MANAGER COMMENTS:	
MANAGER PRINTED NAME AND PHONE	**SIGNATURE AND DATE**
FOR REGIONAL SH&E MANAGER USE ONLY:	
CORRECTIVE ACTIONS REQUIRING IMPLEMENTATION BY SH&E MANAGER:	**RATIONALE:**
NAME AND SIGNATURE:	**DATE:**

RECORDABILITY DETERMINATION ☐ FIRST AID ☐ RECORDABLE ☐ RECORDABILITY UNDETERMINED ☐ NON WORK

☐ PROPERTY DAMAGE ☐ GENERAL LIABILITY ☐ VANDALISM

COMMENTS:

Appendix C

RIDEM Division of Site Remediation Policy Memo 95-01

State of Rhode Island
Department of Environmental Management
Division of Site Remediation

Policy Memo 95-01

Guidelines for the Management of Investigation Derived Wastes

1.0 Purpose

The purpose of this policy memo is to provide guidance regarding the management of potentially contaminated materials generated during environmental site investigations, pilot tests, and interim remedial actions (hereafter referred to as investigatory activities) conducted on property in Rhode Island. It is the intent of the Department that the management of investigation derived wastes (IDW) be:

- protective human health and the environment, and accordingly result in no additional site related risks than existed prior to investigation activities;
- cost effective, consider the likely site remedy and consider waste minimization techniques; and
- done in a manner consistent with all applicable or relevant and appropriate requirements to the extent practicable.

The management of IDW should recognize that investigatory activities are not considered comprehensive remedial actions, and therefore final management of most materials encountered during these activities should be postponed to the extent feasible until a final site remedy has been determined.

The potential problems of managing IDW should be a factor in choosing an investigative method. Project managers should strive to minimize the generation of IDW to reduce the need for special storage or disposal requirements that may result in substantial additional costs yet provide little or no reduction in site risks relative to the final remedial actions.

It is important to note that for all investigatory activities in areas which have the potential to encounter a listed hazardous waste stream, all IDW originating from the area of concern must be managed in accordance with the Department's Rules and Regulations for Hazardous Waste Management.

The regulated community may use the management and storage methods outlined in this memo or submit, for review and approval, alternative IDW management proposals on a site-specific basis. The Division reserves the right to require additional IDW handling procedures as it deems necessary.

2.0 Classes of IDW

For the purpose of this policy memo, IDW are separated into the following four classes:

A. **Solid** – includes unsaturated soils, soil saturated with water, and pre- existing solid wastes;

B. **Liquid** – includes groundwater, drilling water, and decontamination rinsate;

C. **Liquid Wastes and Associated Saturated Solids, and Buried Containers** – includes liquid wastes, any solids saturated with liquid wastes (i.e. a matrix containing greater than 1% liquid waste), and buried containers such as drums, electrical transformers, electrical capacitors, unexploded ordnance, and any other type of container which could potentially contain a hazardous substance; and

D. **Personnel Equipment** – includes equipment and supplies, which are not reusable upon completion of current site activities (such as personal protective equipment and disposable sampling equipment).

3.0 IDW Management Guidelines

The Department recommends the following management guidelines (arranged by IDW class) for initial handling, segregating, storage and disposal of IDW.

3.1 Solid

These guidelines pertain to any investigatory activities, which generate solid IDW, including but not limited to excavations such as boreholes, trenches, and test pits.

A. All intrusive investigatory activities should be observed for evidence of buried containers or liquid waste saturated solids.

B. The preferable management alternative for all solids extracted from a site is replacement back into the same excavation from which it originated, however, consideration should be given to the likely site remedy prior to taking this action.

C. Upon excavation, all solid IDW should be placed on low permeability synthetic sheeting of thickness no less than 10 mils. No material should be stored on synthetic sheeting for a period greater than 48 hours without receiving prior division approval. All solids stored on synthetic sheeting should be covered with similar material during all period when excavation work is not being conducted in that area of concern.

D. When refilling excavations, the original stratigraphy of the area should be maintained to extent feasible. If the excavation is such that it is not possible to entirely refill the excavation, as in the case of a monitoring well placement, the excess solids should be managed in accordance with section 3.1(C) and (E) of this policy memo unless an alternative management plan has been

approved. Under no circumstances shall solid IDW from one area of concern be disposed of in a different area of concern without prior Division approval.

E. Long-term storage of solids (typically period greater than 48 hours) should be in secure containers, which are suitable for potential off-site disposal (for example: roll-off dumpsters or 55-gallon drums). The contents of the containers should be characterized to determine the appropriate treatment or disposal method in a manner approved by the Division and consistent with the contaminants of concern at the site. This characterization can utilize either site investigation samples or samples whose sole purpose is to characterize the IDW.

3.2 Liquid

The following guidelines pertain to any investigatory activities, which generate liquid IDW; including, but not limited to, groundwater monitoring well development and sampling, and decontamination procedures. Aquifer pump tests are beyond the scope of this policy memo and require specific Department review and approval.

A. All liquid IDW, which has been extracted from a site, must be stored in a secure container suitable for off-site disposal, and its contents properly characterized by Division approved laboratory analysis methods for all contaminants of concern at the site to determine the appropriate treatment or disposal method. These analysis methods should be consistent with those proposed for the site investigation work plan. This characterization can utilize either site investigation samples or samples whose sole purpose is to characterize the IDW.

B. Storage of all liquid IDW should be in a segregated manner (liquid which has been taken from the site, by area of concern, from decontamination liquid).

C. All non-decontamination liquid IDW that meets the groundwater quality standards for the subject property's groundwater classification, as stated in the Department's Rules and Regulations for the Groundwater Quality may be disposed of on-site. Liquid, which exceeds these criteria, shall be handled on a case-by-case basis. If it is anticipated that there will be exceedances of any groundwater quality standard at the site, the investigation work plan should contain a proposed management plan for this IDW.

D. The disposal criteria for all non-decontamination liquid IDW containing contaminants for which there are no RIDEM groundwater quality standards must be proposed and approved on a case-by-case basis. Alternative criteria for each contaminant may be proposed as concentrations of individual contaminants or groups of contaminants (i.e., total concentration of volatile organic compounds) below which there will be no demonstrated additional adverse risk to human health or the environment.

E. The preferred alternative for all liquid IDW generated as a result of decontamination procedures is disposal on site.

F. Liquid IDW, which, in accordance with this memo, can be disposed of on-site, should be spread uniformly over a relatively level uncontaminated portion of the site. The on-site disposal of liquid IDW may not lead to increased migration of contaminants from the site nor impact a surface water body, wetland, or neighboring property to any degree, and must infiltrate the ground surface. If the volume of liquid IDW generated during a single investigation is expected to exceed 250 gallons, Division approval is required prior to any on-site disposal.

3.3 Liquid Wastes and Associated Saturated Solids, and Buried Containers

The following guidelines pertain to any investigatory activities which could potentially generate liquid wastes and associated saturated solids, or encounter buried containers, including but not limited to excavation such as boreholes, trenches and test pits.

A. Investigations in areas, which are likely to encounter liquid wastes and associated saturated solids or buried containers, should include a contingency plan for proper handling and disposal of these wastes in the investigation work plan.

B. The Division of Site Remediation should be contacted immediately upon the discovery of liquid wastes and associated saturated solids or buried containers for all projects which do not have a Division approved contingency plan for addressing this class of IDW.

C. All liquid wastes and associated saturated solids extracted from a site should be stored in secure containers suitable for potential off-site disposal, and managed in accordance with the Department's Rules and Regulations for Hazardous Waste Management and/or the Rules and Regulations for the Investigation and Remediation of Hazardous Material Releases as appropriate. Liquid wastes and associated saturated solids extracted from a site must be properly characterized by Division approved laboratory analysis methods for all contaminants of concern, and as necessary to determine the proper treatment or disposal method. Under no circumstances shall liquid wastes and associated saturated solids from one area of concern be disposed of in a different area of concern without prior Division approval.

D. All buried IDW should be extracted from its excavation upon Division approval. This approval may take the form of an approved contingency plan or an incident specific approval by Division personnel. Following extraction, buried containers should be stored in a manner which provided secondary containment for 110% of the container's volume, and managed in accordance with the Department's Rules and Regulations for Solid Waste Management Facilities, and/or the Department's Rules and Regulations for Hazardous Waste Management as appropriate. The contents of any buried containers must be properly characterized by Division approved laboratory analysis methods for all contaminants of concern, and as necessary to determine the proper treatment or disposal method. Under no circumstances should be extracted container not its contents be disposed of on site.

E. Unexploded ordinance encountered and/or extracted from a site must be managed on a site-specific basis under the direction of personnel from the State Fire Marshal's Office, the appropriate municipal Fire Department, and the Division of Site Remediation.

3.4 Personnel Equipment

All personnel equipment IDW should be ultimately disposed of off-site and must be managed in accordance with the Department's Rules and Regulations for Solid waste management Facilities or the Department's Rules and Regulations for Hazardous Waste Management, as appropriate. Under no circumstances should personnel equipment IDW be disposed of on site.

4.0 IDW Storage Guidelines

The investigation work plan must include provisions for the proper storage and security of IDW in the time period between the generation of the material and the determination of the appropriate treatment or disposal method. The Department recommends the following procedures for the management and storage of IDW.

A. All IDW, which is determined to be a hazardous waste, must be managed in accordance with the Department's Rules and Regulations for Hazardous Waste Management.

B. For investigatory activities which are likely to require storage of IDW, the site investigation work plan must include the following:

   1. selected containment methods
   2. the designated secure storage area
   3. a schedule for IDW disposal
   4. a point of contact responsible for IDW management

C. All non-hazardous waste IDW storage containers must be labeled with the following information:

   1. class of IDW
   2. source area
   3. date of generation
   4. generator name, address and phone number

D. The period of storage of non-hazardous waste IDW should logically correspond with ongoing site investigative or remedial work and be completely disposed of within 30 days of the end of that phase of site work.