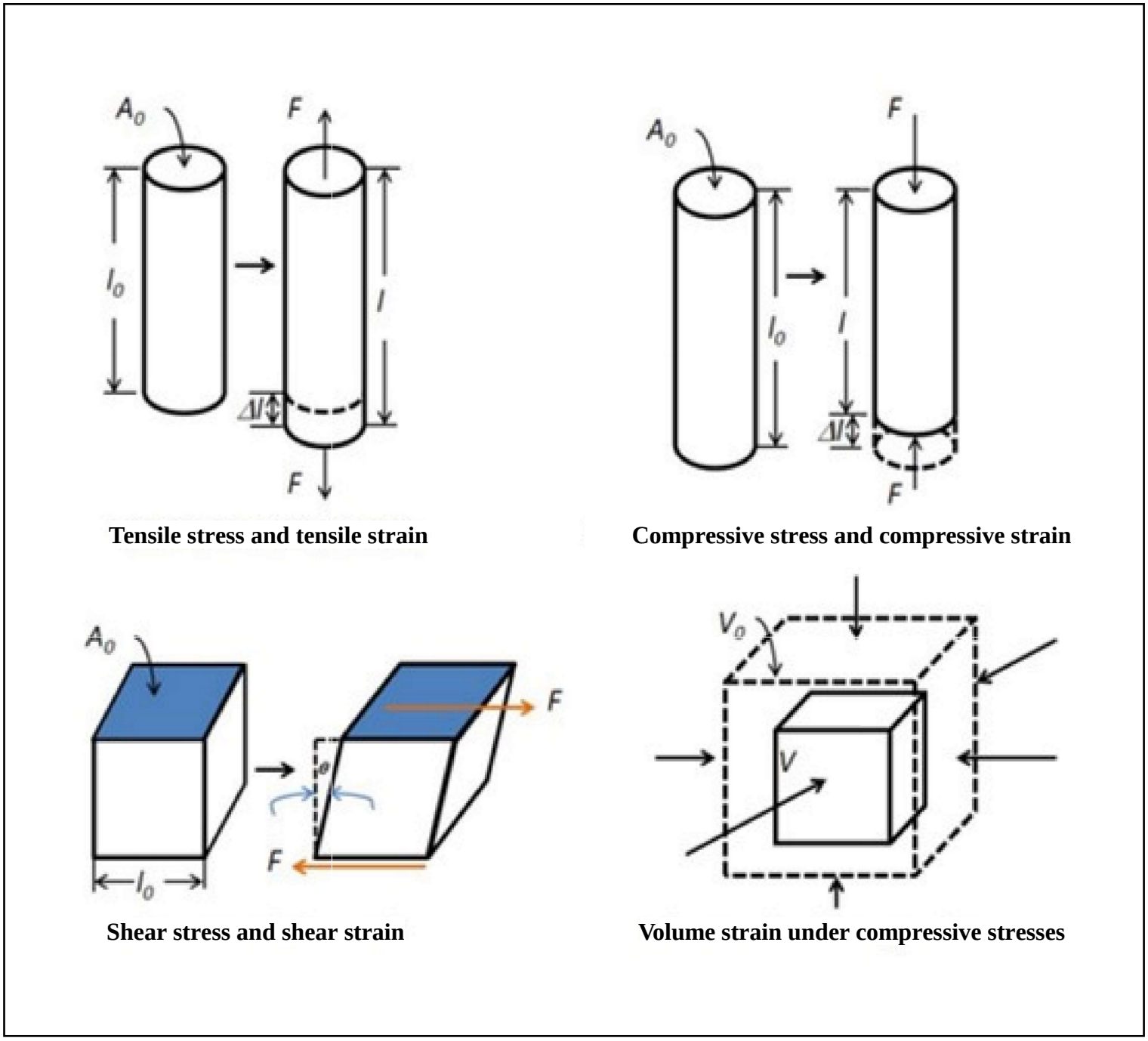

Figure 2-32 Schematic diagram of stress and strain concepts (from Han, 2021)