26. APPENDIX E: STUDY PLAN/ PROTOCOL

STUDY PLAN/PROTOCOL

RB PROTOCOL TO ASSESS REDUCTION IN BACTERIAL CONTAMINATION IN INDOOR AIR

CREM Co LABS STUDY PLAN/PROTOCOL NUMBER
RB220115-SA-01

TEST ORGANISM
Staphylococcus aureus (ATCC 6538)

SPONSOR
Julie Mckinney, Joseph R. Rubino and M. Khalid Ijaz
Reckitt Benckiser LLC
1 Philips Parkway, Montvale, New Jersey 07645

Performing Laboratory
CREM Co Labs., Units 1-2, 3403 American Dr., Mississauga, ON Canada
L4V 1T4

Test Guideline
EPA OCSPP 810.2500

DATE
Jan 16, 2022

RB PROTOCOL TO ASSESS REDUCTION IN BACTERIAL CONTAMINATION IN INDOOR AIR

1.0 Objective

1.1 This document describes assessment of a test substance for a temporary reduction in the number of viable bacteria in indoor air to support air sanitization labeling claims.

2.0 Good Laboratory Practice

This study will be conducted in accordance with EPA Good Laboratory Practice (GLP) regulations (40 CFR Part 160). If necessary, an external Quality Assurance Unit may be provided for this study. The following exceptions to EPA Good Laboratory Practice may be noted in the final study report:

For the studies not performed by or under the direction of the Test Facility, including test substance characterization (40 CFR Part 160.105) and analysis of the active ingredient's levels in the chamber air, a Certificate of Analysis for characterization or a report will be appended to the study report.

A datalogger (CAS Data Loggers, 8437 Mayfield Rd., Unit 104, Chesterland, OH 44026) placed in the aerobiology chamber monitors air temperature and relative humidity (RH). The captured data will be printed following each experiment, initialed, dated and archived in the study file to document this raw data. The autoclave used for sterilization of equipment and materials will also have the cycle information printed, initiated, dated, and archived in the study file. The hard drives and metadata will not be archived.

The photography equipment and retention of the electronic form of photos taken during study conduct may not be handled in accordance with 40 CFR Part 160.

An independent Quality Assurance Unit (QAU) may be engaged to review and certify the quality of the data recorded for the study.

3.0 A glossary and list of abbreviations may be found in Appendix 3.

4.0 Purpose

4.1 The purpose of this study is to evaluate the ability of a test substance to provide a temporary reduction in the number of viable bacteria in an aerosol chamber to support air sanitization labeling claims.

5.0 Justification for Selection of the Test System

5.1 The study design and test system comply with the U.S. Environmental Protection Agency (EPA) OCSPP 810.2500 Air Sanitizers – Efficacy Data Recommendations (December 2012) and the protocol submitted to EPA File No. 777-PA-9 on January 17, 2022 in response to EPA review.

6.0 Scope

6.1 This document outlines the procedure to assess the ability of chemical agents to inactivate representative vegetative bacterial pathogens in indoor air.

CREM Co Labs, Units 1-2, 3403 American Dr., Mississauga, ON, Canada L4V 1T4; Tel: 289-315-3639 Fax: 289-315-3631.
http://www.cremco.ca

6.2 Strict adherence to the protocol is necessary for the validity of the test results. Any deviation from the procedures described here must be documented and justified.

7.0 Experimental Dates

7.1 The proposed experimental start date is Jan 17th, 2022.

7.2 The proposed experimental termination date is March 10th, 2022.

8.0 Test Substance Characterization

8.1 In accordance with 40 CFR Part 160.105, test substance characterization as to identity, strength, purity, solubility, and composition, as applicable, will be documented in this study. The stability, if appropriate, will be determined prior to or concurrently with this study.

8.2 The sponsor will report if the characterization and stability studies have been performed under GLP by filling up the Test Substance Characterization GLP Compliance Assessment form, which will be appended to the study report. Characterization and stability studies, which will not be performed under GLP, will be exempted in the GLP compliance statement.

8.3 A Certificate of Analysis summarizing the chemical characterization will be appended to the study report. Characterization and stability studies not available at the performing laboratory will be exempted in GLP compliance statement.

8.4 The test substance will be prepared in accordance with EPA Lower Certified Limit (LCL) Guidance in 810.2000 (2018).

8.5 See Section 24.0 for chemical analysis of the active ingredient in the chamber's air to be conducted during the testing.

9.0 Test Substance

9.1 Test Substance Name: Lysol Neutra Air: Air Sanitizing Spray

9.2 Test Substance Batch Number: e0199-069

9.3 Test Substance Storage Conditions: Ambient

9.4 Test Substance Preparation: Ready-to-Use (RTU)

9.5 Test Substance Application Method: Press the trigger of the spray-can continuously for 30 seconds and sweep back and forth aiming at the ceiling to treat the air.

9.6 Test Substance Release Time: 30 sec. (The release time indicates the time the test substance is sprayed into the chamber).

9.7 Test Substance Exposure Period: 10 min (The time for which the test microbe is exposed to released chemical in the air will be measured and documented. The concentration of the test bacteria in the chamber will be sampled for viability by collecting air samples during the exposure period).

9.8 The Contact Time of a Test Substance in aerobiology is defined as the time required for the Test Substance to demonstrate the desired level of reduction {≥3 $\log_{10}$ reduction of the test microbe(s)}.

9.9 The air temperature (e.g., 20-25°C) and relatively humidity (e.g., RH: 50±5%) in the chamber during each experiment will be measured and recorded using a datalogger.

9.10 Test Substance Retention is the responsibility of the Sponsor. Any unused test substance will be saved and sent back to RB.

9.11 See Section 24.0 for chemical analysis to be conducted during the testing.

10.0 Labware:

10.1 All items are to be sterile and disposable; they are available from any supplier of scientific labware.

10.2 Micropipettes with appropriate tips to accurately deliver 20, 100 or 1000 µL volumes

10.3 Screw cap tubes – 2 mL

10.4 Screw cap tubes - 50 mL

10.5 Screw cap tubes -15 mL

10.6 Petri plates -150 X 25 mm

10.7 Petri plates -100 X 15 mm

10.8 Serological Pipettes – 1 mL, 5 mL, 10 mL and 25 mL capacity

11.0 Personal protective equipment (PPE; all items listed below are available from suppliers of laboratory safety gear).

11.1 Safety glasses

11.2 Laboratory gloves

12.0 General Solutions and Reagents

12.1 Deionized distilled water (DDW) or equivalent, for making reagent solutions and media.

12.2 Trypticase soy broth (TSB), to culture the test bacteria.

12.3 TSAM Agar (TSA+0.07% Lecithin+0.5% Tween 80+0.2% Sodium thiosulfate) to recover the bacteria from control and test samples and for conducting sterility tests.

12.4 Antifoam A concentrate (Sigma-Aldridge, St. Louis, MO; Cat. # A-5633), is added to the bacterial suspension to be nebulized to reduce frothing. This autoclave-sterilizable silicon-based item is commonly used in fermentation systems and is devoid of bactericidal or bacteriostatic activity.

12.5 Phosphate buffered saline (PBS).

13.0 Soil load (ASTM International 2013; OECD 2013; Springthorpe and Sattar, 2007).

13.1 The soil load for incorporation into the bacterial suspension to be nebulized consists of a mixture of the following thawed stock solutions in phosphate buffered saline (PBS; pH 7.2±0.2):

13.1.1 0.5 g of yeast extract in 10 mL of PBS.

13.1.2 0.5 g of bovine serum albumin (BSA) in 10 mL of PBS.

13.1.3 0.04 g of bovine mucin in 10 mL of PBS.

13.2 The stock solutions of all three components of the soil load are sterilized by passage through a syringe-mounted (25 mm diameter) polyether sulfone (PES) membrane (0.22 µm pore diam.).

13.3 All three solutions are then aliquoted as 1.5 mL volumes and stored at -20±2°C with a shelf-life of at least one year. For short-term storage, the vials can be kept at 4±2°C for no longer than 90±5 day

14.0 General equipment

14.1 Pipettes (Eppendorf or equivalent) with tips to dispense 100 to 1000 µL volumes.

14.2 Analytical balance, to weigh chemicals and to record and standardize inoculum delivery volumes as well as calibration of pipettes.

14.3 Centrifuge to attain speeds of 3,000xg or higher, to allow for the sedimentation of the test bacteria for concentration or washing, or both.

14.4 Freezer: At -20±2°C is required for the storage of media, reagents, and additives.

14.5 Deep freezer: At -70°C or lower to store the stocks of test microorganisms.

14.6 Incubator: To maintain a temperature of 36±1°C for the culture of the test microorganisms and also for sterility testing.

14.7 Biological safety cabinet (BSC), Class II (Type A): Certified; please refer to *Biosafety in Microbiological and Biomedical Laboratories* (CDC 2020) for proper maintenance and operation of this piece of equipment. The performing laboratory must have its own standard operating procedure (SOP) for the certification, maintenance, and operation of such devices.

14.8 Refrigerator: at 4±2°C for storage of media, culture plates and reagents.

14.9 Autoclave, to sterilize culture media, reagents, and waste.

14.10 Vortex mixer, to homogenize bacterial suspensions.

14.11 Balance to weigh the nebulizer before and after spraying of the microbial suspension.

15.0 Examples of Specialized equipment (Further details are given in Appendix 1)

15.1 The Air Trace® Environmental Air Sampler (Particle Measuring Systems, Boulder, CO; http://www.pmeasuring.com/home): For event-related collection of bacterial aerosols.

15.2 Six-jet Collison nebulizer: To generate microbial aerosols in the respirable range of 0.5-5.0 µm (e.g., CH Technologies., 778 Carver Ave, Westwood, NJ 07675, www.chtechusa.com); cylinder of extra-dry compressed air with pressure regulator and a back flow preventer.

15.3 Volatile-gas detector with a gas leak probe: To check for any air leaks from the chamber (e.g., Model BT-45; Quantum Instruments, Garden City, NY).

15.4 Air temperature and RH meter: To monitor and record the air temperature and RH in the aerosol chamber via a wireless data logger (e.g., CAS Data Loggers, 8437 Mayfield Rd., Unit 104 Chesterland , OH 44026); www.dataloggerinc.com/).

15.5 Magnehelic: To detect any pressure differential between the inside and outside of the chamber (Figure 1) (e.g., ITM instrument Inc. 16975 Leslie St. Newmarket, ON L3Y 9A1).

15.6 A muffin fan to evenly distribute the aerosols inside the chamber and to keep them airborne during testing.

15.7 Aircheck Connect Sample Pump Cat # 220-4000 for the collection of the test substance from the chamber air.

16.0 Bacterial species for testing.

16.1 Since contamination of stock cultures can negatively impact the test data, it is crucial to abide by the highest standards of GLP during all manipulations and handling of stock and working cultures.

16.2 All manipulations of the test microorganisms must be performed in accordance with the biosafety practices stipulated in the relevant SOPs of the performing laboratory.

16.3 Per EPA guidance document (EPA 810.2500 2012), the following test organism will be used:

Table 1. Test Bacterium

Staphylococcus aureus (ATCC 6538)

Grown in TSB and recovered on TSAM agar.

17.0 Maintenance, passage, and storage of test bacteria:

17.1 Obtain standard strains of the bacterium (lyophilized) to be used in the testing from a reputable source such as the American Type Culture Collection (ATCC). Every 18 months (or sooner if the quality of the stock culture is compromised) prepare new stock cultures of the test bacteria from the lyophilized material. In case such a stock is unavailable, order a fresh culture directly from a source such as the ATCC.

17.2 Use the following procedures to initiate and maintain in-house stocks of the cultures.

17.3 Culture Initiation

17.3.1 Wipe the outside of the ampule/vial of the freeze-dried culture with a towelette prewetted with 70% (v/v) ethanol and open it inside a laminar flow hood.

17.3.2 Resuspend the freeze-dried material in 1.0 mL of sterile TSB.

17.3.3 Using a pipettor with a sterile pipette tip place 0.1 mL of the rehydrated suspension into each one of two 10.0 mL tubes containing 5.0 mL of sterile TSB. Mix well by shaking.

17.3.4 Streak a loopful of the suspension onto two 100 mm diameter TSA plates (pre-dried to remove any accumulated water on the surface of the agar) to obtain isolated colonies and incubate the plates at 36±1ºC for 18±2 h.

17.3.5 Observe the plates for growth and typical colony morphology of the bacterium. For example, the colonies of *S. aureus* should appear round, convex, entire, glossy, golden-colored colonies ~2 mm in diameter.

17.3.6 Prepare a smear from an isolated colony, Gram-stain it and observe the smear microscopically under an oil-immersion objective (1000X) to ascertain that the Gram-reaction/morphology of the bacterial cells is correct. For example, the cells of *S. aureus* should appear as cocci in singles, pairs, tetrad and grape-like clusters with a deep purple color (Gram-positive).

17.3.7 If required, subject the culture to additional characterization by biochemical and/or molecular means.

17.4 Cryopreservation of cultures: Prepare a broth culture of the desired bacterial species by inoculating with a flamed loop a colony from the TSA plate into 9.0 mL of TSB and incubate the tube at 36±1°C for 18±2 h. Add to this broth culture 1.0 mL of autoclave-sterilized glycerol, shake well and reincubate for 2 h before mixing well and aliquoting into labelled (with indelible ink) cryovials each displaying the source, scientific name,

CREM Co Labs, Units 1-2, 3403 American Dr., Mississauga, ON, Canada L4V 1T4; Tel: 289-315-3639 Fax: 289-315-3631.
http://www.cremco.ca

passage number, lot number and date of storage of the test bacterium. Store the vials at -70ºC or below for no longer than 18 months.

17.5 Test Culture Preparation:

17.5.1 Thaw frozen test culture quickly by holding the vial under running warm water from a tap or by immersing it in a waterbath at 45±1°C.

17.5.2 Inoculate 10 mL of TSB with 100 µL the thawed stock culture and incubate at 36±1ºC for 18±2 h. **This is Passage #1**

17.5.3 To prepare a "Refrigerated Stock Culture", inoculate 10 mL of TSB with 100 µL of the culture and incubate at 36±1ºC for 18±2 h. Place at 4±2°C for no longer than 7 days. **This is Passage #2**

17.5.4 For preparation of working culture, inoculate 100 µL of the "Refrigerated Stock Culture" into 10 mL of TSB and incubate at 36±1ºC for 18±2 h.

17.5.5 Using a Vortex-style device, resuspend the culture for 3-4 s.

17.5.6 The culture should be adjusted to deliver approximately 1.6×10^4 cfu/m^3- 1.0×10^5 cfu/m^3 such that recovery from the baseline sample of parallel untreated control is equivalent to 4.2 – 5.0 $\log_{10}$ CFU/m^3.

17.5.7 To prepare the fluid for each nebulization into the aerobiology chamber, add to the nebulizer reservoir 0.75 mL BSA, 1.05 mL yeast extract, 3.0 mL mucin, 50 µL of the test bacterial suspension and 10 µL of Antifoam A to 10.14 mL of PBS.

17.5.8 Assay the fluid to be nebulized for CFU before and after nebulization by making five 10-fold dilutions (e.g., add 100 µL to 900 µL of PBS). Spread 100 uL of each the last three dilutions on a 100 mm plate of TSA in duplicate.

17.5.9 Incubate plates for 18±2 h at 36±1ºC. Record the CFU and also observe them for any extraneous microbial contamination. The test data would be invalid in case any contamination is detected.

18.0 Basic design of the aerobiology chamber:

18.1 Appendix 1 summarizes the details on the specialized pieces of equipment used in the protocol. The equipment and materials listed are examples only and may be substituted with equivalent items from other sources.

18.2 The aerosol chamber (Figure 2) is an enclosure with a volume of 900.0 ft^3 (25.00 M^3) located inside a clean room with negative pressure and controlled access. The chamber's walls are made out of wipe-able, solid coroplastic sheeting (https://www.homedepot.com/p/Coroplast-48-in-x-96-in-x-0-157-in-White-Corrugated-Plastic-Sheet-CP4896S/205351385) affixed to a framed structure to represent the walls to maintain an airtight seal. Sealable ports, window and door provide access to the inside of the chamber for maintenance and to place and remove any monitoring devices to be used. The walls should be grounded properly to dissipate any static electricity that may accumulate.

18.3 While the chamber can be used with all major classes of microorganisms at biosafety levels (BSL) 1 and 2, the CDC guidelines (CDC 2020) recommend that extra safety precautions and operational requirements be in place for work with experimental aerosols of all such microorganisms. The negative pressure and controlled access to the chamber are designed to provide this additional protection, turning it into 'BSL-2+' facility.

18.4 In accordance with the current EPA guidelines (2012), the chamber does not permit any air exchanges; nor does it contain any furniture or fixtures in accordance with EPA 810.2500 study design description. Furniture and fixtures are not placed in the chamber inside of the BSL facility due to biosafety and decontamination concerns over the multiple test dates over a long period.

18.5 The chamber's internal environment is monitored throughout an experiment with a wireless relative humidity (RH)/air temperature sensor/data logger system (e.g., CAS Data Loggers, 8437 Mayfield Rd., Unit 104 Chesterland , OH 44026); www.dataloggerinc.com/) and recorded on cloud for subsequent download and analysis.

18.6 To assess the airborne survival of the test bacteria or to determine the activity of any air sanitization technology, the air in the chamber is sampled at the rate of 1 ft^3 (28.3 L)/minute using an externally-placed slit-to-agar air (STA) sampler with a built-in vacuum pump This programmable device can be set to operate for a minimum air sampling time of 30 seconds to as long as five hours depending on the STA model, and the actual length of sample collection time will be determined by the anticipated load of viable bacteria in the air of the chamber. The air exiting the sampler is discharged directly into a HEPA filter incorporated in the device or into the BSL-2 facility's HEPA-filtered exhaust system. For the baseline value, the concentration of the test bacteria in the nebulizer fluid is adjusted to achieve a minimum of 4.2 log_{10}/m^3 to a maximum of 5.0 log_{10} CFU/m^3 at the start of the treatment. An STA has been chosen due to its higher efficiency for sampling airborne microorganisms (Borges et al., 2021). These controls will be shared across the three required test lots and will be scheduled to bracket testing (e.g., two control runs prior to test lots and one control run after).

18.7 Between experiments, the air inside the chamber is replaced with fresh air using a vacuum pump and the exiting air directly discharged into a BSC located in the clean room for a minimum of one hour.

18.8 Start and stop times (clock times) will be recorded for the application of the treatment to the air. The official exposure period or contact time begins upon completion of the release of the test substance which should begin after the nebulizer has completed the 10-minute release of the test bacteria, five minutes for stabilization of the aerosols and the 2-minute pre-treatment air sample is taken.

18.9 Any spray device can also be placed inside the chamber and activated from the outside or by accessing it with the gloves affixed to the chamber (Figure 2). The labeled use directions will be based upon the test substance application procedure used during testing.

18.10 A magnehelic is affixed to the outside of the chamber is to visually indicate on a continuing basis any pressure differential between its internal and external atmospheres. Any pressure differential would be regarded as indicative of a breach in the integrity of the chamber resulting in the immediate termination of the test.

18.11 The Contact Time of a Test Substance in aerobiology is defined as the time required for the Test Substance to demonstrate the desired level of reduction {≥3.0 log_{10} reduction in the viability of the test microbe(s)}. Appropriate sampling duration and interval are to be determined during R&D tests before GLP studies. Getting countable colonies on the sampling plates and having the minimum limit of detection are two important factors which determine the appropriate sampling duration and intervals

between sample collections. The air will be sampled for the same duration and at the same intervals for each lot of a Test Substance. The sampling will be continuous during the efficacy test to improve the limit of detection and will continue for approximately 5 minutes after the point where the 3.0 $\log_{10}$ reduction is achieved by the test substance. Sampling time for the control tests will be discrete and the period of sampling will be 2 minutes to get countable CFU on each air sample plate. No fewer than five air samplings per microorganism will be collected in any given test.

18.12 The air will be sampled as shown in Table 2 and Table 3 for Test Substance and Controls, respectively, to recover countable CFU on sampling plates and to improve the limit of detection as much as possible. Each test lot will be evaluated in three runs of the chamber for each bacterial species.

19.0 Experimental Design: A generic sequence of the main steps in the operation of the chamber is given in the Flowchart below.

Flowchart.

Day 1: Control Test

Switch on circulation fan;

Check environmental parameters and adjust as needed

↓

Run an air sampler for 2 minutes for background contamination

↓

Nebulize bacteria for 10 minutes

↓

Allow to stabilize for 5 minutes for uniform distribution of test microorganism in the chamber air

↓

Collect another 2-minute Baseline air sample to confirm 4.2 -5.0 log CFU/m3

↓

Collect air samples for bacterial analyses at intervals listed in Table 4

↓

Flush chamber with fresh air for at least one hour to decontaminate it

CREM Co Labs, Units 1-2, 3403 American Dr., Mississauga, ON, Canada L4V 1T4; Tel: 289-315-3639 Fax: 289-315-3631.
http://www.cremco.ca

Day 2: Efficacy Test

Switch on circulation fan;

Check environmental parameters and adjust as needed

↓

Run an air sampler for 2 minutes for background contamination

↓

Nebulize bacteria for 10 minutes

↓

Allow to stabilize for 5 minutes for uniform distribution of test microorganism in the chamber air

↓

Collect another 2-minute Baseline air sample to confirm 4.2 -5.0 log CFU/m^3

↓

Introduce test substance for 30 seconds inside the chamber

↓

Collect air samples for bacterial analyses at intervals and duration listed in Table 2 to support claims

↓

Flush chamber with fresh air for at least one hour to decontaminate it;

Repeat for additional replicates/lots/controls

CREM Co Labs, Units 1-2, 3403 American Dr., Mississauga, ON, Canada L4V 1T4; Tel: 289-315-3639 Fax: 289-315-3631.
http://www.cremco.ca

20.0 Method for Control of Bias: None

21.0 Operation of the aerobiology chamber

21.1 Actuate the 'muffin' fan (e.g. Cooltron AC Fan, Model FA8038B11T7-51, 80x80x38mm,7Blds,115VAC,50/60Hz,11/9W, 26/31CFM,) placed on the floor of the chamber directly underneath the nebulizer inlet pipe (Figure 2) 10±2 minutes prior to nebulization of the bacterial suspension. Leave the fan on for the duration of a given test to maintain uniform distribution of the aerosolized particles in the air inside. Between experiments, wipe the outside of the fan with 70% (v/v) ethanol for decontamination.

21.2 Check temperature and RH. Adjust if needed.

21.3 Connect the inlet of the STA sampler to a PVC pipe (ID 2.0" or 5.0 cm) which extends into the center of the chamber (Figure 2).

21.4 Place a 150 mm diam. disposable Petri plate with TSAM agar inside the sampler. All agar plates used during testing will be equilibrated to room temperature and the surface of the medium dried prior to use. Collect a 2-minute sample using an STA air sampler to measure the background bacterial contamination prior to test initiation. After collection, retrieve and incubate the plate alongside the test plates.

21.5 Attach an externally placed six-jet Collison nebulizer (Appendix 1) to the port on the chamber, connect the nebulizer to a compressed air cylinder (Figure 2) and then adjust the air pressure to 25 pounds/square inch (PSI) to nebulize the bacterial suspension for 10 minutes. Allow the bacteria to circulate in the chamber and stabilize for 5 minutes.

21.5.1 The level of bacteria in the fluid to be nebulized and the volume nebulized should be previously determined to obtain recovery plates with countable numbers. The sampling times and nebulized fluid should be predetermined to achieve a minimum of 4.2 $\log_{10}$ to a maximum of 5.0 $\log_{10}$ CFU per m^3 in the baseline.

21.5.2 Any plates with colonies which are too-numerous-to-count (TNTC) will invalidate the corresponding sampling point. For the plate of the first sampling point with no visible growth, use a value of 1.0 CFU to take into account the maximum error in the detection limit of STA air sampler.

21.5.3 Weigh the nebulizer before and after nebulization to determine the volume of fluid nebulized. Each gram of weight is regarded as equal to 1.0 mL of the fluid.

21.5.4 At the end of each experiment, retrieve, decontaminate, clean and autoclave sterilize the pipe and the quick connect attached to the nebulizer.

21.6 Place another 150 mm diameter disposable Petri plate with TSAM agar medium (agar surface predried) inside the sampler. Collect an air sample to measure the baseline bacterial level in the chamber ("Baseline"). This value serves as the parallel, untreated control. After collection, retrieve and incubate the plate alongside the test plates.

21.7 After Baseline sampling, the Test Substance is sprayed into room air from a spray can to treat the air. The can will be activated for 30 seconds by pressing its button via the built-in access gloves (Figure 2). Shake test aerosol spray-can well before use. Hold can upright, press button and spray towards the center of the aerobiology

chamber in a sweeping motion. The start and stop times (clock times) will be recorded for the application of the treatment to the air. The official exposure period and contact time begin upon completion of the release of the test substance.

21.7.1 Air treatment is omitted when conducting the Bacterial-Stability-in-Air Control. This control is conducted to measure the survival and settle rate of the test microorganisms in the chamber over the test period.

21.8 When conducting the Efficacy Test, after completing the release of the test substance, start sampling the air continuously following Table 2. After incubation, each plate of efficacy test should be divided into 4 or more sections and the CFU in each section will be counted and recorded. The midpoint of each section will be used as the sampling point and a quarter of the total sampling period of the agar plate will be considered as the sampling period for each section (Figure 1).

Table 2: Sampling Times for the Test Substance

Samples	Sampling Duration (minutes)	Four Sections on each recovery plates (minutes)			
		#1	#2	#3	#4
Baseline**	-2 to 0	Section Sampling Time Period and Mean Contact Time			
1	0* to10	0-2.5 (1.25)	2.5-5 (3.75)	5-7.5 (6.25)	7.5-10 (8.75)

* Time 0 start after finishing the application of the test substance
** Sampling for Baseline can be shorter to get a countable CFU on plates if the STA machine has the capability.

Figure 1a shows an example for dividing sampling plates longer than 2 minute and counting CFU in each Section. Figure 1b shows a baseline plate which has been sampled for 2 minutes. Table 3 is an example showing how the counted CFU's are recorded in a table to be used for calculation of $\log_{10}$ CFU/m^3 at each time point following Appendix 2.

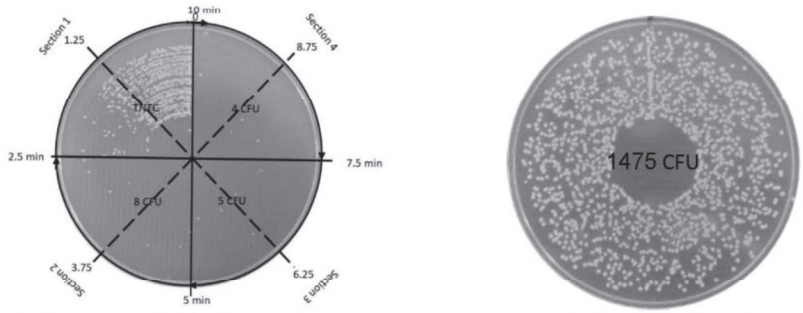

a) Efficacy test, 0-10 min sampling sampling

b) Baseline plate, 2 min

Figure 1) Dividing plates into four equal sections and counting CFU at each section

Table 3. Sampling duration for the test substance for testing against bacteria.

Sections	Period of air sampling (minutes)	Time (minutes) at which sample was collected
Baseline	2	0
1	0-2.5	1.25
2	2.5-5	3.75
3	5-7.5	6.25
4	7.5-10	8.75

*Too numerous to Count, if the CFU is TNTC

21.9 When conducting the Bacterial-Stability-in-Air Control use Table 4 for sampling time and duration. The CFU on each 2-minute sampling plates will be counted and recorded.

Table 4: Sampling Duration for the Control Test

Samples	Sampling time point (minutes)	Sampling Duration (minutes)
Baseline	0	-2 to 0
1	5	4-6
2	10	9-11
3	15	14-16
4	20	19-21

21.10 In order to calculate the time in which the test substance demonstrate ≥3.0 $\log_{10}$ reduction (contact Time), CFU/m^3 will be calculated for each sampling time point using the counted CFU on the corresponding section following the formula presented in Appendix 2. The $\log_{10}$ CFU/m^3 will be plotted for each sampling time point for control and efficacy tests. The time in which the test substance demonstrates 3.0 $\log_{10}$ reduction in CFU/m^3 will be calculated following procedure explained in Appendix 2. The $\log_{10}$ CFU/m^3 curve of control and efficacy test will be estimated with a straight line using linear regression through the contact time. The contact time will be calculated by subtracting $\log_{10}$ CFU/m^3 of the efficacy test from that of the control test (Appendix 2).

21.11 Using a towelette soaked in 70% (v/v) ethanol, wipe the outside as well as readily accessible inside surfaces of the STA sampler after each test. Similarly, decontaminate the outside and inside surfaces of the air sample collection pipe (Figure 2).

22.0 Chamber Testing Schedule

22.1 Appendix 4 is the proposed daily activity for the test substance against *S. aureus* with all required controls.

23.0 Confirmation of neutralization of active ingredient(s) prior to testing

23.1 TSAM agar medium will be used to immediately arrest any bactericidal and/or bacteriostatic activity in the samples to be collected.

23.2 Neutralization Test will be performed on each lot by introducing the test substance into the chamber for 30 sec.

23.3 Collect a 10-minute air sample using an STA sampler containing a plate with the recovery agar medium.

23.4 Within 30 minutes after collection of the air sample, spread over the agar plate 100 µL of the test bacterial suspension diluted to contain ≤100 CFU per plate.

23.5 For controls, (a) use the same procedure to inoculate two unexposed plates containing the neutralizer, and (b) one agar plate from the same lot as sterility control. Incubate plates at an appropriate temperature and observe them after 18±2 hours of incubation and continue incubation for an additional three days. Count and record the CFU. The performance criteria are no more than a 20% difference in the numbers of CFU on (a); and (b) should be free from any visible growth.

23.6 The neutralizer is regarded as effective if the number of CFU on the test plates is within 75-125% of the CFU count on the control plate (OECD 2003). Any bacterial or fungal growth on the sterility control plate would invalidate the test.

24.0 Collection and analysis of test chemical(s) in the air of the chamber

24.1 Collect air samples from a run of the chamber without the test strain for each lot of test substance following Table 5. Label each sampling tube and rap them in parafilm and pack properly. The samples should be kept under ambient condition and shipped to RB for analysis using a reliable courier service.

Table 5: Sampling Duration for the chemical collection and analysis

Sections	Period of air sampling (minutes)
Bacground	2
1	0*-2
2	4-6
3	9-10
4	14-16
5	19-21

* Time 0 start after finishing the application of the test substance

24.2 The concentration of Dipropylene Glycol – DPG and Triethylene glycol - TEG in air is to be analyzed at RB using the method described in Appendix 5.

24.3 One chemical collection test will be performed per lot and shared with all relevant test protocols.

25.0 Incubation

25.1 Incubate all test and control plates at 36±1°C and observe them after 18±2 hours.

CREM Co Labs, Units 1-2, 3403 American Dr., Mississauga, ON, Canada L4V 1T4; Tel: 289-315-3639 Fax: 289-315-3631.
http://www.cremco.ca

25.2 Incubate all plates at the end of 18±2 hours of incubation for an additional three days to allow injured or stressed bacterial cells to grow and form visible colonies (Springthorpe and Sattar 2007).

25.3 Enumerate survivors and calculate bacterial survival/reductions.

25.4 See Appendix 2 for calculations.

26.0 Quality Control

26.1 Sterility Control: One plate of growth medium will be incubated alongside the test plates. All reagents will be evaluated by plating 1.0 mL on growth media and incubated alongside the test. The acceptance criterion for this control is lack of visible growth.

26.2 Viability Control: The growth/neutralizing media will be challenged in duplicate with <100 CFU the test bacterium and incubated alongside the test to confirm the media can support the growth its low numbers.

26.3 Purity Control: A streak plate will be prepared of the test culture and incubated alongside the test to confirm the purity of the test culture. The acceptance criterion for this control is the demonstration of a pure culture.

26.4 "Bacterial Stability-in-Air" Control: This control is conducted as described in Section 20.0 omitting treatment with the test substance (Section 20.9). This control measures the survival and settling rate of the test microorganisms in the chamber over the test period. There are no acceptance criteria for this value. This value is used in the calculation of the $\log_{10}$ reduction performance. Such a testing will be conducted at least three times for each bacterial species

27.0 Statistical Analysis

27.1 The data will be subjected to appropriate statistical analyses for the preparation of the final project report. Such analyses will include, at a minimum, calculation of standard deviations (SD).

27.2 Method for Control of Bias: None

28.0 Study Acceptance Criteria:

28.1 Test Substance Performance Criteria: After correction for bacterial settling and natural biological decay, the test substance must demonstrate ≥99.9% (≥3.0 $\log_{10}$) reduction in the viability of the bacterial species over the parallel untreated control.

28.2 Baseline Acceptance Criteria: The control recovery must demonstrate a minimum of 4.2 $\log_{10}$ to a maximum of 5.0 $\log_{10}$ CFU/m^3 at the start of the treatment for a valid test.

29.0 Control Acceptance Criteria:

29.1 All sterility controls must be free of any visible growth.

29.2 Viability Control must demonstrate growth in all media with <100 CFU/plate.

29.3 Purity Control must demonstrate a pure culture.

29.4 Neutralization Validation: The mean number of CFU on the plate unexposed to the test substance and those on the plate exposed to the test substance must be within 50%.

29.5 Magnehelic readings must indicate no leaks in the chamber during an experiment.

29.6 Temperature and RH readings must stay within range required for the test.

30.0 Retesting Guidance

30.1 For tests where the product passes and the mean Baseline value is above 5.0 log10 CFU/m3, no retesting is necessary. For tests where the product fails and the mean Baseline is above 5.0 log10 CFU/m3, retesting may be conducted. For tests where the product fails and the mean baseline is less than 4.2 log10 CFU/m3, no retest is required

31.0 Protocol Changes

31.1 Protocol changes or revisions, if needed, will be documented including the reason for the change, signed/dated by the Study Director and Sponsor, and described in the study report. SOPs used in the study will be the effective version at the time the study will be conducted. Changes in SOPs not required by the protocol will be documented in the raw data and approved by the Study Director.

32.0 Study Report:

32.1 The study report will include all elements listed in OCSPP 810.2000 (2018), 810.2500, 40 CFR Part 160.185, and EPA Pesticide Registration Notice 2011-3.

33.0 Study Retention:

33.1 All original raw data for this study will be archived at the Test Facility until study completion including all handwritten raw data for control and test substances (e.g. notebooks, data worksheets, and calculations), protocol amendments/deviations. SOP deviations, study specific correspondence, original signed protocol, and the signed study report.

33.2 All facility records for this study will be archived at the Test Facility until study completion including SOP, referenced methods, QA reports, equipment logs, equipment calibration and maintenance logs, reagent preparation and quality control records, personnel training, education, and experience records, etc.

33.3 Following study completion, the Test Facility will keep all raw data and certified copies of facility records for 5 years before transferring them to the RB GLP Archives (Montvale, NJ).

CREM Co Labs, Units 1-2, 3403 American Dr., Mississauga, ON, Canada L4V 1T4; Tel: 289-315-3639 Fax: 289-315-3631.
http://www.cremco.ca

Approvals Signatures

SPONSOR:

Name: Rhonda Jones	Title: Agent for Reckitt Benckiser
Tel: 260-244-6270	Email: Rjones@SRCconsultants.com
Signature:	Date: 1-16-22

For confidentiality purposes, study information will be released only to the sponsor/representative signing the Study Plan/Protocol (above) unless other individuals are specifically authorized in writing to receive study information.

CREM Co. Labs:

Name: Syed A. Sattar, PhD	Title: **Study Director**
Tel: 905-315-3639	Email: Syed.sattar@cremco.ca
Signature:	Date: Jan. 16, 2022

Figure 2: Aerobiology Test Chamber with Essential Components (900 ft^3 or 25 M^3)

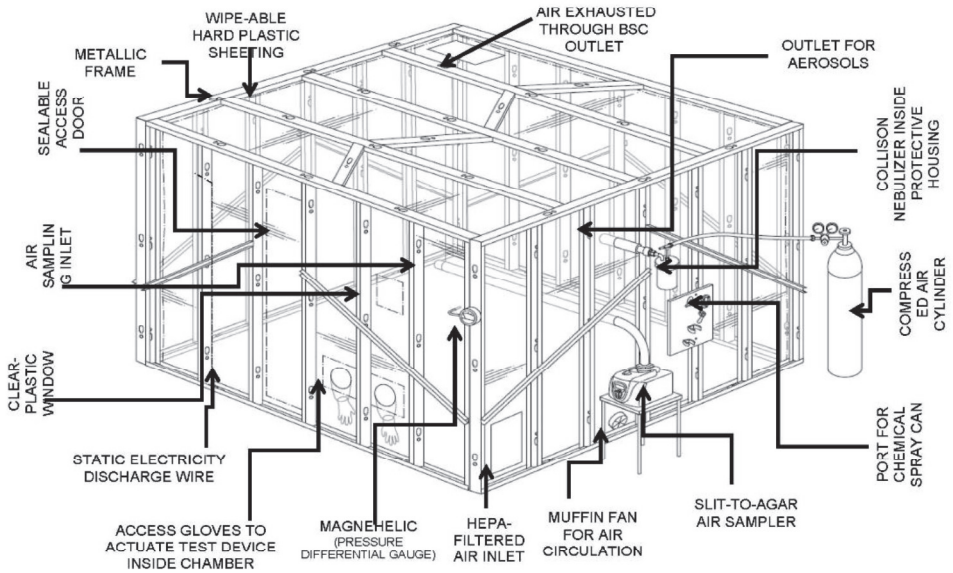

CREM Co Labs, Units 1-2, 3403 American Dr., Mississauga, ON, Canada L4V 1T4; Tel: 289-315-3639 Fax: 289-315-3631.
http://www.cremco.ca

References

ASTM International (2013). Annual Book of Standards. Standard Quantitative Disk Carrier Test Method for Determining Bactericidal, Virucidal, Fungicidal, Mycobactericidal, and Sporicidal Activities of Chemicals. Document #E2197. ASTM, Barr Harbor Drive, West Conshohocken, PA 1942.

Borges, J.T., L.Y.K. Nakada., M.G. Maniero, and J.R. Guimaraes. SARS-CoV-2: a systematic review of indoor air sampling for virus detection. Environ. Sci. Pollut. Res. 2021 Feb 25;1-14. doi: 10.1007/s11356-021-13001-w.

Centers for Disease Control and Prevention (2020). *Biosafety in Microbiological and Biomedical Laboratories*, 6th Edition, Publication No. 21-1112.

Dubuis et al. 2020. Ozone efficacy for the control of airborne viruses: Bacteriophage and norovirus models. https://doi.org/10.1371/journal.pone.0231164

Duchaine, C. 2016. Assessing microbial decontamination of indoor air with particular focus on human pathogenic viruses. http://dx.doi.org/10.1016/j.ajic.2016.06.009

Environmental Protection Agency (2013) – Air Sanitizers - Efficacy Data Recommendations). Test Guideline No. #OCSPP 810.2500-Air Sanitizers-2013-03-12 [EPA 730-C-11-003] (http://www.regulations.gov/#!documentDetail;D=EPA-HQ-OPPT-2009-0150-0025)

Fedorenko et al. 2020. Survival of the enveloped bacteriophage Phi6 (a surrogate for SARS-CoV-2) in evaporated saliva microdroplets deposited on glass surfaces. https://doi.org/10.1038/s41598-020-79625-z

Ijaz, M.K., B. Zargar, K.E. Wright, J. Rubino, and S.A. Sattar. Generic aspects of the airborne spread of human pathogens indoor and emerging air decontamination technologies. Am. J. Infect. Control, 2016, 44(9 Suppl):S95-S101 http://www.ajicjournal.org/issue/S0196-6553(16)X0013-2

Kashkoli, F.M., Soltani, M, B. Zargar, J. Rubino, M.K. Ijaz, E. Taatizadeh, and S.A. Sattar. Analysis of an indoor air decontamination device inside an aerobiology chamber: a numerical-experimental study.Air Quality, Atmoshere & Health, 2019 / https://doi.org/10.1007/s11869-019-00782-w

Miles A.A., Misra S.S. (1938). The estimation of the bactericidal power of the blood. *J. Hyg.* **38**: 732–749.

Organization for Economic Cooperation and Development (2013). Guidance Document on Quantitative Methods for Evaluating the Activity of Microbicides used on Hard Non-Porous Surfaces. OECD document No. ENV/JM/MONO(2013)11. OECD, Paris, France.

Prussin et al. 2018. Survival of the Enveloped Virus Phi6 in Droplets as a Function of Relative Humidity, Absolute Humidity, and Temperature. https://doi.org/10.1128/AEM.00551-18

Sattar, S.A., R.J. Kibbee, B. Zargar, K.E. Wright, J. Rubino, and M.K. Ijaz. Decontamination of indoor air to reduce the risk of airborne infections: Studies on survival and inactivation of airborne pathogens using an aerobiology chamber. Am. J. Infect. Control, 2016, 44(10): e177-e182 http://dx.DOI:10.1016/j.ajic.2016.03.067

Springthorpe, V.S. and Sattar, S.A. (2007). Application of a quantitative carrier test to evaluate microbicides against mycobacteria. J. AOAC International 90:817-824.

Turgeon et al. 2014. Comparison of Five Bacteriophages as Models for Viral Aerosol Studies. http://doi:10.1128/AEM.00767-14

Zargar, F.M. Kaskooli, M. Soltani, K.E. Wright, M.K. Ijaz, and S.A. Sattar Mathematical modeling and simulation of bacterial distribution in an aerobiology chamber using computational fluid dynamics. Am. J. Infect. Control, 2016, 44(9 Suppl):S127-137 http://www.ajicjournal.org/issue/S0196-6553(16)X0013-2

Zargar, B., S.A. Sattar, J. Rubino, and M.K. Ijaz. A quantitative method to assess the role of indoor air decontamination to simultaneously reduce contamination of environmental surfaces: testing with vegetative and spore-forming bacteria. Letters in Appl. Microbiol. 2019 / https://doi.org/10.1111/lam.13109

Appendix 1

Examples of additional specialized pieces of equipment required

Equipment (Cat. #)	Manufacturer	Purpose	Design features/Justification for use	Maintenance/Operation	Illustration
1. Collison six-jet nebulizer (Model: MRE CN24/25)	CH Tech., Westwood, NJ 07675; www.inhalation.org	Generate airborne particles in the respirable range (0.1-5.0 µm in diam.).	Air at a pressure of about 25 psi (172.37 kPa) from a pump or compressed air cylinder is needed for operation. The glass reservoir receives 15 mL of the bacteriophage / virus-soil mixture and it is weighed before and after nebulization to determine the volume aerosolized and may be used to estimate the number of CFU introduced into the chamber air. The liquid to be nebulized contains antifoam to reduce excessive foaming during nebulization. This type of nebulizer is favored in microbial aerobiology due to its versatile and well-characterized nature. The size range of particles generated by it not only are in the respirable range, but the droplet nuclei arising from them can remain suspended in air for periods long enough to study biological decay and/or the impact of physical or chemical agents on the viability of airborne infectious particles.	The entire unit, which is made of metal & glass, can be readily washed and autoclave-sterilized between uses. The nebulizer may be placed inside a shatter-proof plastic housing as extra workplace safety precaution in case of any leakage or breakage of the nebulizer's glass container. This device does not require any periodic recalibration.	
2. RTR-500 series data logger RTR-503L for relative humidity & air temperature (cat. RTR-503L)	CAS Data Loggers, 8437 Mayfield Rd., Unit 104,Chesterland , OH 4 4026 www.dataloggerinc.com	Remotely sense and record relative humidity (RH)/air temperature in the chamber.	RH and air temperature are among the crucial factors affecting microbial survival in air. They may also influence the efficiency of any air decontamination technology being assessed. The recorder is designed to send data wirelessly to a remote computer at an adjustable time interval. A 5-minute interval is used for data capture.	This device requires yearly recalibration by the manufacturer.	

CREM Co Labs, Units 1-2, 3403 American Dr., Mississauga, ON, Canada L4V 1T4; Tel: 289-315-3639 Fax: 289-315-3631.
http://www.cremco.ca

3. Sampler slit-to-agar (STA) sampler.	Pinpoint Scientific Ltd, 1st Floor, North Road, Bridgend Industrial Estate, Bridgend, , CF31 3TP; sales@pinpointscientific.com). **Or** Particle measuring system 5475 Airport Blvd Boulder, Colorado 80301 USA T: +1 303 443 7100, +1 800 238 1801 W: www.pmeasuring.com	Collect airborne bacteriophage / virus on a timed and event-related basis.	A disposable plastic Petri plate (150 mm diam. X 15 mm in height) with nutrient agar (75 mL) is placed on the sampler's rotating platform to collect aerosols by impingement, and the distance between the bottom surface of the slit and the top surface of the agar is automatically adjusted for optimal particle impingement. The sampler has a built-in vacuum pump to draw in the air to be sampled, and a timer to permit adjustment of air sampling duration from a minimum of 2 minutes to a maximum of 5 hours. At the end of the sampling time, the plate is removed and incubated. The sampler automatically controls the air sample collection rate at 28.3 L/minute. It can also record sampling data for subsequent download to a computer.	Does not require any sterilization between uses but a simple wipe-down with a disinfectant-soaked towelette. Before each use, the air-inlet must be inspected to ensure that the slit is free of any obstructions. The volume of the agar in the Petri plate must be precisely measured to maintain a specific distance between the surface of the agar and the bottom of the slit. The agar surface must also be free of any water drops before placement in the sampler. The sampler has a built-in tubular HEPA filter at the exhaust with a flow-sensor to indicate when the filter needs replacement. This device requires yearly recalibration by the manufacturer.	
4. Volatile gas leak detector and probe	Quantum Instruments; Model BT-45	To detect any leaks in the chamber.	The device could detect either hydrogen gas from a cylinder or glycol introduced into the chamber using a fogger.	Replace battery when stabilization beeps are prolonged past 1 minute.	

5. Muffin fan	Cooltron AC Fan, Model FA8038B11T7-51, 80x80x38mm,7Blds,115 VAC,50/60Hz,11/9W, 26/31CFM, Nidec Alpha V, TA300, Model A31022-20, P/N: 933314 3.0 inch/7.62 cm diam.; output 30 CFM	To keep the aerosolized materials uniformly suspended inside the chamber	Relatively small size with sufficient air flow to keep the bacteriophage/virus and the chemicals suspended in air	Requires wiping of external surfaces with 70% (v/v) ethanol	
6. Equipment and accessories to collect samples of the test chemical from the chamber.	Calibrator: chek-mate Calibrator, 0.50 to 5 L/min, with NIST Certification, catalog # 375-0550N https://www.skcinc.com/products/chek-mate-calibrator-050-to-5-l-min-1 Pump: Universal 44XR Sample Pump Single Kit, catalog # 224-44XRXD https://www.skcinc.com/products/universal-44xr-sample-pump-single-kit-1 Tubes: Sorbent Tubes, XAD-7 OVS, catalog # 226-57 https://www.skcinc.com/products/sorbent-tubes-xad-7-ovs-1	To collect air-sample for analysis of active(s) .	Air-sampling pump with air-collection tube.	Pump flow-rate needs to be calibrated. For maintenance, follow the instructions provided by the manufacturer.	

CREM Co Labs, Units 1-2, 3403 American Dr., Mississauga, ON, Canada L4V 1T4; Tel: 289-315-3639 Fax: 289-315-3631.
http://www.cremco.ca

APPENDIX 2

Baseline Concentration:

Considering that the sampled air has the same bacterial concentration as the air in the chamber, we get the following equation

$$Baseline\ concentration = \frac{CFU\ on\ the\ sampled\ plate}{Volume\ of\ the\ sampled\ air}$$

(1)

As the volume of the air sampled relates to the sampling rate and the duration of sampling, Equation (1) gives us the baseline concentration as follows:

$$Baseline\ concentration = \frac{CFU\ on\ the\ sampled\ plate}{\text{sampling rate} \times duration\ of\ sampling\ in\ minutes} \quad (2)$$

The STA sampler samples air at the rate of 0.0283m^3/min. For example, if there are 2516 CFU on the baseline plate with a 2-minutes sample, the baseline concentration can be calculated as follows:

$$Baseline\ concentration = \frac{2516\ CFU}{0.0283\ \frac{m^3}{min} \times 2\ min} = 44452.30\ CFU/m^3$$

which is equal to 4.65 $\log_{10}$ CFU/m^3

Bacterial concentration in chamber air:

For the *n*th sampling plate, similar to equation (2) we can write:

$$Bacterial\ concentration\ in\ the\ chamber\ air = \frac{CFU\ on\ the\ sampled\ plate}{\text{sampling rate} \times duration\ of\ sampling\ in\ minutes} \quad (3)$$

Removal of the air from the chamber due to collection of each sample dilutes the bacterial concentration. The correction factor required to address this is defined as:

$$Dilution\ Correction\ Factor\ for\ nth\ sampled\ plate = \frac{Volume\ of\ the\ chamber}{Volume\ of\ the\ chamber - \text{sampling rate} \times duration\ of\ sampling\ in\ minutes * n} \quad (4)$$

Therefore, the total bacterial concentration corresponding to the *n*th sampled plate can be calculated as follows:

$$Corrected\ Bacterial\ concentration\ in\ the\ chamber\ air = \frac{Volume\ of\ the\ chamber}{Volume\ of\ the\ chamber - \text{sampling rate} \times duration\ of\ sampling\ in\ minutes * n} \times \frac{CFU\ on\ the\ sampled\ plate}{\text{sampling rate} \times duration\ of\ sampling\ in\ minutes}$$

For example, if the third 2-minute sampling plate contains 1 CFU, we can calculate the corrected bacterial concentration as follows:

$$Corrected\ Bacteria\ concentration\ in\ the\ room = \frac{24.34\ m^3}{24.34\ m^3 - 0.0283\ \frac{m^3}{min} \times 2\ min \times 3} \times \frac{1\ CFU}{0.0283\ \frac{m^3}{min} \times 2\ min} = 17.79\ \frac{CFU}{m^3}$$

which is equal to 1.2 $\log_{10}$ CFU/m^3

CREM Co Labs, Units 1-2, 3403 American Dr., Mississauga, ON, Canada L4V 1T4; Tel: 289-315-3639 Fax: 289-315-3631.
http://www.cremco.ca

Calculating biological Decay and the Efficacy of a substance

To evaluate the efficacy of a test substance, the rate of biological decay of the challenge bacterial species in the air of the chamber is determined first. This is equal to an untreated parallel control. Then, another experiment is conducted (efficacy test) where the test substance is released into the chamber. Since the initial titers of the two experiments may differ in practice, the data for the untreated parallel control is transformed so that its initial titer becomes equal to the initial titer of the efficacy test.

Figure 3 shows CFU recovery data from the untreated parallel control experiment, transformed untreated parallel control and efficacy experiment. Log_{10} reduction at each sampling time is equal to the vertical distance between the transformed untreated parallel control line and the line for the efficacy test.

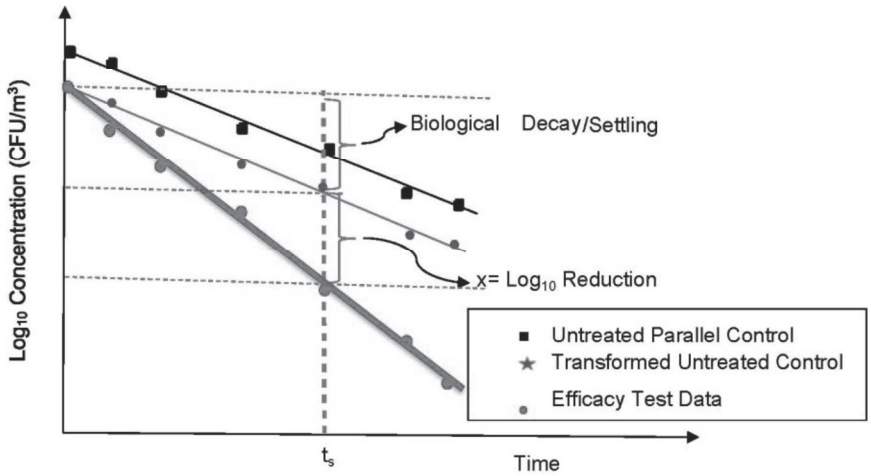

Figure 2: Schematic of log reduction and biological decay

Calculation of Contact Time (the time in which the chemical demonstrates 3.0 Log_{10} reduction) and calculation of Log_{10} reduction at a specific time

The log_{10} CFU/m^3 curve of efficacy test and the transformed control are estimated with a line using linear regression through the contact time. Assuming we get the following equations for transformed control (y_1) and efficacy curve (y_2):

$$y_1=-0.0049t+4.7173 \quad (5)$$

$$y_2=-0.8154t+4.7623 \quad (6)$$

Subtracting Equation y_2 from y_1 gives: $y_1-y_2=0.8105t-0.0450$ (7)

The Contact Time (time (minutes) in which the test substance demonstrate 3.0 $\log_{10}$ reduction) can be calculated from equation (7) by substitution y1-y2 with 3 $\log_{10}$ CFU/m^3 as follow:

$3=0.6105t-0.0450 \Longrightarrow t=(3+0.0450)/0.8105=3.76$ min

Similarly the Log reduction at a specific time can be calculated from equation (7) by substituting the time. For example the Log_{10} reduction at 5-minute can be calculated from equation (7) as follows:

$y_1-y_2=0.8105*(5)-0.04=4.01$ $\log_{10}$ CFU/m^3

Log_{10} reduction is used to evaluate the substance efficacy. A $\geq$ 3.0 log reduction is considered to meet the performance criterion.

CREM Co Labs, Units 1-2, 3403 American Dr., Mississauga, ON, Canada L4V 1T4; Tel: 289-315-3639 Fax: 289-315-3631.
http://www.cremco.ca

Appendix 3: Glossary & Abbreviations

GLOSSARY

Term	Definition
Aerobiology	Study of the behavior of microorganisms, pollen and allergens in air
Air sanitization	Removing and/or inactivating potentially harmful microorganisms in air
Nebulizer	Any device capable to turning a powder or liquid into airborne particles
Nebulizer fluid	A suspension of the test microorganism in a soil load and an antifoam
Refrigerated stock	A prepared microbial suspension used to initiate cultures for use in experimentation
Slit-to-agar (STA) air sampler	A device where airborne microbes are drawn through a narrow slit for capture on a nutrient recovery medium by impaction
Soil load	A mixture of one or more organic/inorganic substances added to suspensions of test microbes to simulate the presence of bodily secretions, excretions, or other materials that may shield microbes by interfering with the activity of a microbicidal agent.

Abbreviations

µL	Microliter
BSA	Bovine serum albumin
BSC	Biological safety cabinet
BSL	Biosafety level
DDW	Deionized distilled water
m^3	Cubic meter
h	Hour
HEPA	High-efficiency particle arrestor
ID	Inside diameter
kPa	Kilo-Pascal
m^3	Cubic meter
PBS	Phosphate-buffered saline
PES	Polyethersulfone
PPE	Personal protective equipment
PVC	Polyvinyl chloride
QAU	Quality assurance unit
SD	Standard deviation
STA	Slit-to-agar
TSA	Trypticase soy agar
TSB	Trypticase soy broth
v/v	Volume/volume

Appendix 4

Daily activities for a given lot/microorganism/replicate

Day 1 – AM

- 9:00 –Wear PPE, check the chamber for integrity as well as air temperature and RH, adjust RH if required. Seal the door of the chamber. Prepare suspension for nebulization. Collect the nebulizer fluid for CFU assay.
- 10:00- Nebulize test bacteria for control counts (Stability-in-Air) [10-min nebulization + 5-min stabilization + collecting at least three air samples over the next 10-min+ collect the nebulizer fluid for CFU assay.]
- 11:15 – Stability-in-Air (untreated control) assessment complete

Keep the prepared bacterial culture on ice for use later during the day

- 11:15 – 12:00 – Evacuate the chamber. Dilution and plating of nebulizer fluid samples. Incubation of the culture plates. Observe plates from previous days' experiments and take photographs, clean up and decontaminate lab ware.
- 12:00 – 1:00 PM – Continue Evacuating the chamber
- 12:00 – 1:00 – Scientists take break plus flush the chamber

Day 1 – PM

- 1:00 PM–Wear PPE, check the chamber for integrity as well as air temperature and RH, adjust RH if required. Seal the door of the chamber. Prepare suspension for nebulization. Collect the nebulizer fluid for CFU assay.
- 2:00 PM - Nebulize test bacteria
- 2:15 PM – Dispense product
- 2:25 – 3:00 PM – Collect air-sample by STA, remove plate for incubation ➢ 3:00 PM test completed
- 3:00 – 5:00 PM – Evacuate the chamber. Dilution and plating of nebulizer fluid samples. Incubation of the culture plates. Decontaminate the labware/waste, prepare culture/supplies for next day and exit BSL-2 facility

Appendix 5: Analytical Method for Determination of Dipropylene Glycol in Air by GC

RECKITT BENCKISER

ANALYTICAL METHOD

Method #:	**DPGAir-01**		
For:	Determination of Dipropylene Glycol in Air by GC		
Issue Date:	01/14/2022	**Replaces Date:**	Original issue
Project Name:	Honey Cake	**Country:**	USA
Author:	Mark M. Miller	**Status:**	Final

Keywords: Dipropylene glycol; Aerosol, DPG

SCOPE:

This method determines the Dipropylene glycol - DPG content in air delivered by an aerosol spray product containing significant amounts of fragrance. DPG determination is made by Capillary GC using a DB-Wax column and FID detector. The samples and standards are dissolved in Isopropanol with a quantitation range of approximately 5 to 200 ppm, using a three point external standard curve. Validation of this assay is pending.

REAGENTS:

1. Dipropylene glycol – (DPG), approximately 99%, Aldrich Chemical T5,945-5 or equivalent.
2. Isopropanol – (IPA), (2-Propanol), JT Baker 9095 or equivalent.
3. De-ionized Water

EQUIPMENT:

Agilent HP 7890 Gas Chromatograph or equivalent.
4 place Analytical Balance
2 or 3 place minimum 2000 gram capacity analytical balance
SKC universal sampling pump Catalog # 224-44XR
SKC UltraFlo Calibrator Catalog # 709
VWR Electronic Digital Barometer/Thermometer/Humidity Meter and Clock Catalogue # 35519-0555.
Volumetric Flasks, pipettes and other misc. glassware

GC CONDITIONS

Detector:	FID
Column:	DB-Wax 30 Meter x 0.53 mm, 1 um Film Thickness, Megabore Capillary Column or equivalent *.
Column Temp:	120 ^{0}C hold for 1 min., Ramp # 1: 10 ^{0}C/min. to 220 ^{0}C & hold for 2 min.
Detector Temp:	250 +/- 20 ^{0}C; Detector Signal set for highest sensitivity
PP Injection Port Temp:	250 +/- 20 ^{0}C
Helium Flow:	Constant Pressure at 10 PSIG 11-12 +/- 2 ml/min Make-up gas flow = 10 ml/min
Sample size:	2 +/- 1 microliter
No. of injections/vial:	Two

NOTE: These are proposed conditions and are to be used as a starting point. Due to column age and column supplier the actual conditions may vary considerably from the above conditions in order to obtain adequate chromatography. These changes will be recorded in the raw data and will not be considered deviations from the procedure. The purpose of the second oven temperature ramp is to bake out the column after the TEG peak has eluted to eliminate carry over from previous injections.

- GC Columns that are equivalent include the following: Supelcowax. Innowax, Rtx-Wax, etc.

1. DPG Standard Preparation

Primary Standard Stock Solution - Approximately 1000 ppm

Accurately weigh 0.1000 +/- 0.0150 g of DPG (100 % basis) into a 100 ml volumetric flask. Dilute to volume with deionized water. This is the Stock Standard

Working Standards:

Primary Standard # 1 - Approximately 100 ppm

Pipette 10 ml of the stock standard into a 100 ml volumetric flask and make to volume while mixing with IPA This is Primary Standard # 1.
Make at least 2 injections of this standard.

Primary Standard # 2 - Approximately 50 ppm

Pipet 5 ml of the stock standard into a 100 ml volumetric flask and make to volume while mixing with IPA. This is Primary Standard # 2.
Make at least 2 injections of this standard.

Primary Standard # 3 - Approximately 10 ppm

Pipet 1 ml of the stock standard into a 100 ml volumetric flask and make to volume while mixing with IPA. This is Primary Standard # 3.
Make at least 2 injections of this standard.

Calculate the RSD (relative standard deviation) of the DPG peak area to injections. The RSD should be +/- 10 %. If the RSD is not within this range, troubleshoot the problem. If no reason can be found for the problem, prepare the standards over again and restart the analysis.

Secondary Standard (2°) Stock Solution - Approximately 700 ppm

Accurately weigh 0.0700 +/- 0.010 g of DPG (100 % basis) into a 100 ml volumetric flask. Dilute to volume with deionized water. This is the Secondary Stock Standard.

Secondary Standard (2°) - Approximately 35 ppm

Pipette 5 ml of the Secondary stock standard into a 100 ml volumetric flask and make to volume while mixing with IPA This is the Secondary Standard.
Make at least 2 injections of this standard.

The average result should be +/- 10 % of the calculated value for DPG in the secondary standard in ppm.

= **2°** Weight in mg **x** 5 ml / 100 ml = ~35 ppm

2. Air Sampling Procedure

Air Sampling Chamber:

This can be of any size of interest. The volume should be known as well as the temperature, pressure and the relative humidity as % RH.

Apparatus:

Samples are collected using a personal sampling pump calibrated, with the sampling device attached, to within ±5% of the recommended flow rate.
Samples are collected using OVS-7 tubes, which are specially made 11-mm i.d. × 13-mm o.d. × 5.0 cm long glass tubes that taper to 6-mm o.d. × 2.5 cm. Each tube is packed with a 140-mg back section and a 270-mg front section of XAD-7 and a 13-mm diameter glass fiber filter. The back section is retained by two foam plugs and the sampling section is between one foam plug and the glass fiber filter. The glass fiber filter is held next to the sampling section by a polytetrafluoroethylene (PTFE) retainer. These tubes are commercially available from SKC Inc. (catalog no. 226-57) and from both Supelco and Forest Biomedical as a custom product.

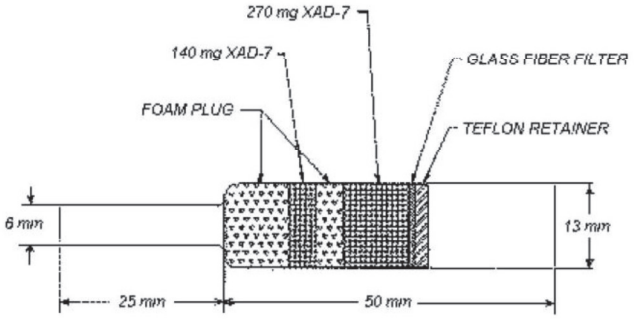

Technique:

Immediately before sampling, remove the front cap from the sampling tube. Using a knife cut the end of the rear sample tube cap.
Calibrate the sample pump to determine the flow rate.
Attach the small end of the sampling tube to the pump with flexible tubing. Position the tube so that sampled air passes through the front section (GFF) of the tube first.
Air being sampled should not pass through any hose or tubing before entering the sampling tube.
Attach the sampler vertically with the open end pointing obliquely outwards, 76 to 101.6 cm from the floor.
Record the initial weight of the aerosol can to at least two decimal places as t^0.
Spray the aerosol mist in the center of the room with a side to side motion for the assigned time.
Start the sampling pump.
After sampling for the appropriate time, remove the sample and seal the tube with plastic end caps.
Run one blank sample with each set of samples. Handle the blank sample in the same manner as the other samples except draw no air through it.
Record the sample volume (in liters of air) for each sample, the room temperature in deg C, the final aerosol can weight, the pressure in mmHg = Torr, the % Relative humidity along with any potential interferences.

Pressure Conversion Units:
To convert Inches of mercury (inHg) to mmHg multiply by 25.4
To convert Atmospheres to mmHg multiply by 760

To convert Bars to mmHg multiply by 750.062

Sample Tube Handling:

Sample tubes are opened and the front section (GFF and 270 mg adsorbent), and optionally the back section of each tube is placed in separate suitable size screw cap vials. Discard foam plugs.
Each section is desorbed with 2 mL of IPA.
The vials are sealed immediately and allowed to extract/desorb for one half hour in a sonicator or the vials can be shaken vigorously by hand several times during the extraction/desorption time.
Transfer a portion of the solution from each of the 4-mL vials to smaller glass vials suitable for an autosampler.
Run at least two injections of each sample preparation.

Calculations:

1. ppm DPG in Sample = $\frac{(Y - C)}{M}$

Where,
Y is the DPG peak area in the sample chromatogram.
C is the **y intercept.**
P is the percent purity of the Primary standard (from the COA).
M is the **slope** of the line from the three point Primary standard curve.
C and **M** can be determined using Excel or other suitable software package.

2. Total ppm DPG

$= \sum$ ppm DPG from front and back of sample tube.

3. RAAC (**R**eplicate **A**nalysis **A**cceptance **C**riteria) is the acceptance criteria for duplicate analyses of the same sample. **RAAC must be +- 10 %.**

RRAC = ([Result injection 1/ Result injection 2] – 1) * 100.

NOTE: If the RAAC is greater than +/- 10 %, stop and troubleshoot the problem. If no reason can be found for the problem, prepare samples over again and repeat the analysis.

4. Concentration of DPG in the air sample.

$$\frac{\text{(Total ppm DPG) (DV) (24.46) (10^6) (g) (mg)}}{\text{(Liters) (DE) (MW) (1000 mg) (1000 µg)}} = \text{ppm} \times 5.488 = \text{mg/M}^3$$

Where:

µg/mL	= Concentration of DPG in sample.
24.46	= Molar volume (liters/mole) at 25°C and 760 mm Hg
MW	= Molecular weight (g/mole) = 134.17
DV	= Desorption volume = 2 ml IPA
Liters	= Liters of air sample
DE	= Desorption efficiency = 1
5.488	= MwDPG / 24.45 (unit conversion factor)

SAMPLE CHROMATOGRAMS

1. DPG Standard Chromatograms 10, 50, and 100 ppm:
DPG Isomers are measured as a timed peak group from 5.3 to 7.1 Minutes.

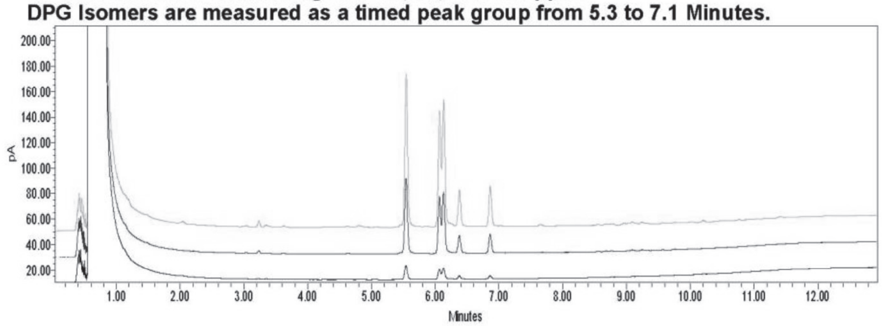

~~~~~~

Revision History:

Approval Date	**Revision Level**	**Author**	**Description of the Revision**
01/14/22	01	**M. Miller**	Original Release

Written By: Mark Miller/USA/R&C **Date:Jan/14/22**

Analytical Manager: **Christopher Wolyniak** /USA/R&C **Date:Jan/14/22**
~~~~~~