88191330

CA4170090023 3

PRELIMINARY DRAFT SITE INSPECTION REPORT FOR SAN DIEGO NAVAL STATION

February 1992

Prepared by:

IT Corporation
312 Directors Drive
Knoxville TN 37913

Submitted by:

HAZARDOUS WASTE REMEDIAL ACTIONS PROGRAM
Oak Ridge, Tennessee 37831
managed by
MARTIN MARIETTA ENERGY SYSTEMS, INC.
for the
U.S. DEPARTMENT OF ENERGY
under contract DE-AC05-84OR21400

for the:

DEPARTMENT OF THE NAVY
SOUTHWESTERN DIVISION
NAVAL FACILITIES ENGINEERING COMMAND
SAN DIEGO, CA 92132

Rec'd 3/1/92 gd.

DEPARTMENT OF THE NAVY
NAVAL STATION
SAN DIEGO, CALIFORNIA 92136-5000

IN REPLY REFER TO:
5090
Ser OCSE/ 0834

18 FEB 1992

U.S. Environmental Protection Agency Region IX
75 Hawthorne Street
San Diego, CA 94105
Attn: Federal Enforcement Division

Gentlemen:

Enclosed is a copy of the Preliminary Draft Inspection Report for your review and comment. This report presents the results of a site inspection encompassing five sites within Naval Station, San Diego.

To avoid delays in Naval Station Installation Restoration Program (IRP), it is requested that the report be reviewed by all parties concerned and review comments submitted in writing no later than March 10, 1992.

If you have any questions, please contact Mr. Julius Miller, Code OCSE3 at (619) 556-6336.

Sincerely,

GARY A. DOUGLASS
Safety and Environmental
Program Manager
By direction of
the Commanding Officer

Encl:
(1) Preliminary Draft Site Inspection Report for NAVSTA

Copy to:
SW Div, Code 1822.FA (w/o encl)
DHS, Mr. J. Menatti
CRWQCB, Mr. J. Anderson
DTSC, Mr. J. Hemendez

PRELIMINARY
SITE INSPECTION REPORT
FOR
SAN DIEGO NAVAL STATION

Submitted To:

Department of the Navy
South Western Division
Naval Facilities Engineering Command
San Diego, CA 92132

Prepared By:

IT Corporation
312 Directors Drive
Knoxville, TN 37913

Prepared By:

Hazardous Waste Remedial Actions Program
Oak Ridge, Tennessee 37831
managed by
Martin Marietta Energy Systems, Inc.
for the
U.S. Department of Energy
under contract DE-AC05-84OR21400

KN/WP388.COV/02-04-92/D2

PRELIMINARY DRAFT
SITE INSPECTION REPORT
FOR
SAN DIEGO NAVAL STATION

Prepared by:

IT Corporation
312 Directors Drive
Knoxville, Tennessee 37923
615-690-3211

Approved: _____ Date: _____
Project Manager, IT Corporation

Approved: _____ Date: _____
HAZWRAP Program Manager, IT Corporation

Approved: _____ Date: _____
Quality Assurance Officer

Table of Contents

List of Appendices iv
List of Tables v
List of Figures viii
List of Acronyms ix
Executive Summary xii
1.0 Introduction 1-1
1.1 Purpose of Report 1-1
1.2 Base Location and History 1-1
1.3 Base Physical Characteristics 1-2
1.3.1 Regional Geologic Setting 1-2
1.3.2 NAVSTA Hydrogeologic Units 1-3
1.3.3 Surface Hydrology 1-3
1.3.4 Land Use 1-4
1.3.5 Climatic Characteristics 1-4
1.4 Site Background Information 1-4
1.4.1 Site 2 - Mole Pier 1-4
1.4.2 Site 3 - Salvage Yard 1-6
1.4.3 Site 4 - DPDO Storage Yard 1-7
1.4.4 Site 7 - Sewer Plant Site 1-8
1.4.5 Site 8 - Fire Fighter Training Facility 1-10
2.0 Field Program 2-1
2.1 General Approach 2-1
2.2 Variances to the Work Plan 2-1
2.3 Field Activities and Procedures 2-1
2.3.1 Geophysical Survey 2-1
2.3.2 Soil Boring Drilling and Sampling 2-2
2.3.3 Monitoring Well Installation and Soil Sampling 2-3
2.3.4 Monitoring Well Development and Groundwater Sampling 2-4
2.3.5 Monitoring Well Abandonment 2-5
2.3.6 Sediment Sampling 2-5
2.3.7 Hydrologic Data Collection 2-6
2.4 Disposal of Wastes from Field Activities 2-6
2.5 Quality Assurance/Quality Control Procedures 2-7

Table of Contents (Continued)

2.6 Health and Safety Procedures 2-10

3.0 Results of Field and Analytical Investigation 3-1

3.1 Site-Specific Geologic Characteristics 3-1

3.1.1 Site 2 - Mole Pier 3-1

3.1.2 Site 3 - Salvage Yard 3-1

3.1.3 Site 4 - DPDO Storage Yard 3-2

3.1.4 Site 7 - Sewer Plant Site 3-2

3.1.5 Site 8 - Fire Fighter Training Area 3-3

3.2 Hydrogeologic Characteristics 3-3

3.2.1 Site 2 - Mole Pier 3-6

3.2.2 Site 3 - Salvage Yard 3-6

3.2.3 Site 4 - DPDO Storage Yard 3-6

3.2.4 Site 7 - Sewer Plant Site 3-7

3.2.5 Site 8 - Fire Fighter Training Area 3-7

3.3 Background Sample Results 3-8

3.3.1 Site 2 - Mole Pier 3-9

3.3.2 Site 4 - DPDO Storage Yard 3-9

3.3.3 Site 7 - Sewer Plant Site 3-10

3.3.4 Site 8 - Fire Fighter Training Area 3-10

3.4 Site-Specific Sample Results 3-10

3.4.1 Water Quality of Site Groundwater Samples 3-10

3.4.2 Site 2 - Mole Pier 3-11

3.4.3 Site 3 - Salvage Yard 3-15

3.4.4 Site 4 - DPDO Storage Yard 3-16

3.4.5 Site 7 - Sewer Plant Site 3-19

3.4.6 Site 8 - Fire Fighter Training Facility 3-22

4.0 Hazard Assessment 4-1

4.1 Introduction and Approach 4-1

4.2 Identification of Chemicals of Potential Concern 4-1

4.2.1 Data Evaluation Methods 4-1

4.2.2 Chemicals of Potential Concern 4-2

4.2.3 Uncertainties 4-5

4.3 Preliminary Exposure Assessment 4-5

4.3.1 Receptor Survey 4-5

Table of Contents *(Continued)*

4.3.2 Migration Pathway Analysis 4-7

4.3.3 Identification of Exposure Pathways 4-9

4.4 Identification of Potential ARARs 4-11

4.4.1 Chemical-Specific ARARs for Soils 4-13

4.4.2 Chemical-Specific ARARs for Groundwater 4-16

4.5 Hazard Evaluation 4-17

4.5.1 Site 2 - Mole Pier 4-18

4.5.2 Site 3 - Salvage Yard 4-20

4.5.3 Site 4 - DPDO Storage Yard 4-20

4.5.4 Site 7 - Sewer Plant Site 4-21

4.5.5 Site 8 - Fire Fighter Training Facility 4-22

5.0 Conclusions and Recommendation 5-1

5.1 Site 2 - Mole Pier 5-1

5.2 Site 3 - Salvage Yard 5-3

5.3 Site 4 - DPDO Storage Area 5-3

5.4 Site 7 - Sewer Plant Site 5-4

5.5 Site 8 - Fire Fighter Training Facility 5-5

5.6 Recommendations 5-6

List of Appendices

Appendix	Title
A	Work Plan Variances
B	Boring Logs and Well Construction Logs
C	Soil Borings and Monitoring Wells Elevations and Coordinates
D	Validated Data
E	Time/Log Drawdown Plots
F	Analytical Data

List of Tables

Table	Title	Follows Page
1.4-1	Wastes Disposed of at Mole Pier	1-5
1.4-2	Wastes Disposed of at DPDO Storage Yard	1-8
1.4-3	Wastes Disposed of at the Sewage Plant Site	1-10
1.4-4	Wastes Disposed of at the Fire Fighter Training Facility	1-11
3.2-1	Groundwater Elevations Measured at Time of In Situ Test	3-4
3.2-2	Hydraulic Conductivity Calculations NAVSTA San Diego	3-4
3.2-3	Summary of Site Hydraulic Conductivities NAVSTA San Diego	3-4
3.2-4	Groundwater Elevations on February 21, 1991 In Situ Test	3-5
3.2-5	Summary of Site Hydraulic Parameters NAVSTA San Diego	3-5
3.3-1	Summary of Detected Inorganic Compounds in Background Soil Samples, January - February 1991 Naval Station, San Diego, California	3-9
3.3-2	Summary of Detected Inorganic Compounds in Background Groundwater Samples, January - February 1991, Naval Station, San Diego, California	3-9
3.4-1	Groundwater Conductivity Values	3-10
3.4-2	Site 2 Soils - Organic Compounds	3-13
3.4-3	Site 2 Soils - Inorganic Compounds	3-13
3.4-4	Site 2 Groundwater - Organic Compounds	3-14
3.4-5	Site 2 Groundwater - Inorganic Compounds	3-14
3.4-6	Site 3 Groundwater - Organic Compounds	3-15

List of Tables *(continued)*

Table	Title	Follows Page
3.4-7	Site 3 Groundwater - Inorganic Compounds	3-15
3.4-8	Site 4 Soils - Organic Compounds	3-16
3.4-9	Site 4 Soils - Inorganic Compounds	3-16
3.4-10	Site 4 Groundwater - Organic Compounds	3-16
3.4-11	Site 4 Groundwater - Inorganic Compounds	3-16
3.4-12	Site 7 Soils - Organic Compounds	3-19
3.4-13	Site 7 Soils - Inorganic Compounds	3-20
3.4-14	Site 7 Groundwater - Organic Compounds	3-21
3.4-15	Site 7 Groundwater - Inorganic Compounds	3-21
3.4-16	Site 8 Soils - Organic Compounds	3-22
3.4-17	Site 8 Soils - Inorganic Compounds	3-22
3.4-18	Site 8 Groundwater - Organic Compounds	3-22
3.4.19	Site 8 Groundwater - Inorganic Compounds	3-22
4.2-1	Summary of Soil Data for Site 2 - Mole Pier	4-2
4.2-2	Groundwater Data Summary and ARARs for Site 2 - Mole Pier	4-2
4.2-3	Groundwater Data Summary and ARARs for Site 3 Salvage Yard	4-2
4.2-4	Summary of Soil Data for Site 4 - DPDO Salvage Yard	4-2
4.2-5	Groundwater Data Summary and ARARs for Site 4 - DPDO Salvage Yard	4-2
4.2-6	Summary of Soil Data for Site 7 - Sewer Plant Site	4-2

List of Tables *(continued)*

Table	Title	Follows Page
4.2-7	Groundwater Data Summary and ARARs for Site 7 Sewer Plant Site	4-2
4.2-8	Summary of Soil Data for Site 8 - Fire Fighter Training Facility	4-2
4.2-9	Groundwater Data Summary and ARARs for Site 8 - Fire Fighter Training Facility	4-2
4.2-10	Results of Dioxin and Furan Analysis Converted to 2,3,7,8-TCDD Equivalents	4-5
4.4-1	Standards, Requirements, Criteria, or Limitations Evaluated for ARARs Determination	4-13
4.4-2	Source Listing for Chemical-Specific ARARs for Soil NAVSTA San Diego	4-13
4.4-3	Source Listing for Chemical-Specific ARARs for Groundwater, NAVSTA San Diego	4-13
4.4-4	Estimation of RCRA Action Levels for Selected Chemicals of Concern	4-16
4.5-1	Comparison of Maximum Soil Values with ARARs for Site 2 - Mole Pier	4-18
4.5-2	Comparison of Maximum Soil Values with ARARs for Site 4 - DPDO Salvage Yard	4-20
4.5-3	Comparison of Maximum Soil Values with ARARs for Site 7 - Sewer Plant Site	4-22
4.5-4	Comparison of Maximum Soil Values with ARARs for Site 8 - Fire Fighting Training Facility	4-22

List of Figures

Figure	Title	Follows Page
1-1	Base Location Map	1-1
1-2	Site Location Map	1-4
1-3	Site 2 - Mole Pier	1-4
1-4	Site 3 - Salvage Yard	1-6
1-5	Site 4 - DPDO Storage Yard	1-7
1-6	Site 7 - Sewer Plant	1-8
1-7	Site 7 - Sewer Plant Site prior to 1978	1-9
1-8	Site 8 - Fire Fighter Training Facility	1-10
2-1	Monitoring Well Construction Diagram	2-3
3-1	Stratigraphic Cross-Section A-A' Site 2 - Mole Pier	3-1
3-2	Stratigraphic Cross-Section B-B' Site 2 - Mole Pier	3-1
3-3	Site 2 - Mole Pier Boring and Sampling Locations	3-1
3-4	Stratigraphic Cross-Section A-A' Site 4 - DPDO Storage Yard	3-2
3-5	Site 4 - DPDO Storage Yard Boring and Sampling Locations	3-2
3-6	Stratigraphic Cross-Section A-A' Site 7 - Sewer Plant	3-2
3-7	Site 7 - Sewer Plant Site Boring and Sampling Locations	3-2
3-8	Stratigraphic Cross Section A-A Site 8 - Fire Fighting Training Area	3-3
3-9	Site 8 - Fire Fighting Training Facility Boring and Sampling Locations	3-3
3-10	72 Hour Monitoring of Tidal Fluctuation, NS4-MW03	3-3
3-11	Groundwater Elevation Contour Map February 21, 1991 - AM	3-5
3-12	Groundwater Elevation Contour Map February 21, 1991 - PM	3-5

List of Acronyms

AL	action level
AAL	applied action level
CAA	Clean Air Act
CCA	California Administrative Code
CERCLA	Comprehensive Environmental Response, Compensation, and Liability Act
CPF	cancer potency factor
CRDL	contract-required detection limit
CLP	Contract Laboratory Program
CSWQCB	California State Water Quality Control Board
CWA	Clean Water Act
DHS	(California) Depart of Human Services
DOE	U.S. Department of Energy
DPDO	Defense Property Disposal Office
EM	electromagnetic
Energy Systems	Martin Marietta Energy Systems, Inc.
ft/s	feet per second
GBL	government bill of lading
GPR	ground penetrating radar
GSSI	Geophysical Survey Systems Incorporated
HAZWRAP	Hazardous Waste Remedial Actions Program
HHEM	Human Health Evaluation Manual
HRS	Hazard Ranking System
H&S	health and safety
IAG	Interagency Agreement
IAS	Initial Assessment Study
IRP	Installation Restoration Program
IT	IT Corporation
KHz	kilohertz
L&A	Leighton and Associates, Inc.
MAL	maximum allowable level
MCL	maximum contaminant level
mg/L	milligrams per liter
MLLW	mean lower low water

List of Acronyms (Continued)

MHz	megahertz
msl	mean sea level
mS/m	milliSiemens per meter
MPN	most probable number
NAVSTA	Naval Station
NCP	National Oil and Hazardous Substances Contingency Plan
NEESA	Naval Energy and Environmental Support Activity
NOAA	National Oceanic and Atmospheric Administration
NSC	Naval Supply Center
OD	outside diameter
OVM	organic vapor meter
PA	preliminary assessment
PAH	polyaromatic hydrocarbon
PCB	polychlorinated biphenyl
PCDD	polychlorinated dibenzo-p-dioxin
PCDF	polychlorinated dibenzofuran
PNA	polynuclear aromatic
POL	petroleum, oils, and lubricants
ppb	parts per billion
ppm	parts per million
ppt	parts per thousand
psi	pounds per square inch
PVC	polyvinyl chloride
PWC	Public Works Center
QAAP	Quality Assurance Project Plan
QA/QC	quality assurance/quality control
RfD	reference dose
RI/FS	remedial investigation/feasibility study
ROD	Record of Decision
SARA	Superfund Amendments and Reauthorization Act
SDWA	Safe Drinking Water Act
SI	site inspection
STLC	soluble threshold limit concentration
SWDIV	Southwest Division

List of Acronyms *(Continued)*

TBC	to be considered
TCDD	tetrachlorodibenzo-p-dioxin
TDS	total dissolved solids
TEF	toxicity equivalence factor
TPH	total petroleum hydrocarbons
TTLC	total threshold limit concentration
USC	Unified Soil Classification
USCS	U.S. Soil Conservation Services
U.S. EPA	U.S. Environmental Protection Agency
UST	underground storage tank
VOA	volatile organics analysis
VOC	volatile organic compound
WET	waste extraction test
WCC	Woodward-Clyde Consultants

Executive Summary

This report presents the results of a site inspection (SI) performed at five sites within Naval Station (NAVSTA) San Diego. The purpose of this SI is to evaluate sites identified during the preliminary assessment (PA) phase and to determine if a site poses a potential threat to public health or the environment. The SI also determines the need for removal actions, provides sufficient data for proper Hazard Ranking System (HRS) scoring purposes, and determines if remedial investigation/feasibility studies (RI/FS) are necessary for each site.

Five sites were identified as requiring an SI at NAVSTA in San Diego, California. Three of these sites (Site 2 - Mole Pier, Site 3 - Salvage Yard, and Site 4 - Defense Property Disposal Office Storage Yard [DPDO Storage Yard]), were identified in the Initial Assessment Study (IAS) for NAVSTA. The IAS was conducted under the former Navy Assessment and Control of Installation Pollutants Program (NACIP). The remaining two sites, Site 7 - Sewer Plant Site and Site 8 - Fire Fighter Training Facility, were identified in a PA under the Navy Installation Restoration Program (IRP).

Based on identified environmental needs and in continuation of the Navy IRP, Naval Facilities Engineering Command, Southwest Divisions, through an interagency agreement directed the U.S. Department of Energy (DOE) to perform an SI for NAVSTA San Diego. Martin Marietta Energy Systems, Inc. (Energy Systems) as prime contractor to the DOE and as manager of the Hazardous Waste Remedial Action Program (HAZWRAP), subcontracted IT Corporation (IT) to perform the SI.

NAVSTA is approximately 3 miles southeast of the center of San Diego proper and 10 miles north of the border between the United States and Mexico. The approximate boundaries of NAVSTA are the City of San Diego to the north, National City to the east and south, and San Diego Bay to the west.

NAVSTA San Diego began operations in 1919 as a docking/fleet repair base for the U.S. Shipping Board. Currently, NAVSTA San Diego consists of 1,127.2 acres and provides personnel and logistic support services for 25 major tenant commands, and subsistence for several naval activities at other locations.

Land use along the port immediately north and south of NAVSTA San Diego consists of industrial establishments. Commercially zoned lands are found along the major thoroughfares (Harbor Drive, Main Street, and National Avenue). Beyond the facility to the east and northeast, the area is primarily residential.

Four intermittent surface streams drain watersheds that are tributaries to the Bay in the immediate eastern and upland areas near NAVSTA San Diego one of the tributaries, Paleta Creek, forms a major embayment near Sites 2 and 8. The poor water quality of the streams probably reflects the entrainment of the urban runoff. The streams have no designated existing or potential beneficial use. For the most part groundwater at NAVSTA San Diego discharges into Paleta Creek and San Diego Bay.

Climatological data from the National Oceanic and Atmospheric Administration (NOAA) weather stations in San Diego and Chula Vista report the average annual rainfall around San Diego Bay to be approximately 9 inches per year.

There are no groundwater wells located at NAVSTA San Diego. Groundwater underlying NAVSTA is not considered to be a potable water source; therefore, it is unlikely that a receptor would be exposed via drinking water.

Most of the groundwater discharges into Paleta Creek and San Diego Bay. The recreational use of San Diego Bay and its embayments in these areas is restricted as a result of military security needs and the heavy Naval traffic from the shipyard. Exposure to a human receptor through site-related chemicals in the near-shore waters is therefore unlikely. Given the size of San Diego Bay, chemical constituents that migrate into the waters of San Diego Bay would become diluted to concentrations well below the limits of detection. Individuals using these off-shore waters for recreational purposes probably would not have significant intakes of site-related chemicals.

Given the restricted use of groundwater and near-shore surface waters, it is unlikely that a human receptor would come in direct contact with elevated concentrations of site-related chemicals in water.

Secondary pathways may include bioaccumulation of chemicals into fish or game and exposure via consumption of these organisms. However, the commercial and private harvesting of marine animals such as shellfish is generally restricted in the areas of marinas

and shipyards because of the poor water quality usually associated with these types of operations. Therefore, it is unlikely that human receptors will be exposed via consumption of fish harvested in San Diego Bay.

This SI report contains the findings and conclusions from the implementation of the approved SI Work Plan. Methodologies employed to characterize the sites included literature search of past studies, collection of sediment samples, drilling and sampling soil borings, and installation and sampling of groundwater monitoring wells. Chemical analyses of suspect compounds were performed in a Navy IRP-approved laboratory. A summary of the results for each site are provided below.

Site 2 Mole Pier. Mole Pier is located at the southern end of NAVSTA San Diego. It is located between Paleta Creek to the north and Mole Road to the south. Grading in recent years has created a relatively flat ground surface. The western third of the site is currently occupied by various maintenance and storage buildings. Other office and storage buildings are located near the northern boundary along 7th Street. The central and remaining portions of the site contain ball fields, other outdoor recreation facilities, and parking areas.

According to the IAS report and past studies, the site was used for the disposal and open burning of demolition debris and hazardous waste.

As part of the SI conducted by IT, 15 soil borings and 3 monitoring wells were constructed, and 1 well was abandoned. In addition to the three wells installed by IT, five existing monitoring wells were sampled.

From 0 to 10 feet below grade, silty sand and sands were encountered interbedded with clays and gravels. The western end of the site contained a noticeable amount of concrete and other nonflammable rubble in the upper 10 feet of soil.

Water levels were measured to determine the direction of and changes in groundwater flow. Hydraulic conductivity ranged from 2.6×10^{-3} to 1.0×10^{-2} feet/minute, with a mean of 3.4×10^{-3} feet/minute. Based on groundwater tests and measurements, groundwater flow velocity of approximately 10.1 feet/year was calculated flowing toward Paleta Creek.

From the 18 borings (15 soil borings and 3 monitoring well borings), a total of 41 soil samples were collected for chemical analyses of total petroleum hydrocarbons (TPH), volatile organic compounds (VOC), base/neutral and acid extractables (BNA), pesticides, polychlorinated biphenyls (PCB), and California Administrative Code (CAC) metals. A select few samples were analyzed for dioxin and dibenzofurans.

Eight wells were sampled, from which a total of nine water samples and one field duplicate were collected. The samples were analyzed for TPH, VOCs, BNAs, pesticides, PCBs, and CAC metals.

Evaluating all chemical data together, it is observed that most of the soil contamination is located in the southwestern portion of the site and may be attributable to a past release to the subsurface via a leaking tank or underground line.

From the preliminary risk assessment, the identified chemicals of potential concern include organics, heavy metals and fuels. The results of preliminary risk assessment suggests that the site-related chemicals do not present an immediate threat to human health but have the potential for concern of long-term risks to human health.

The applicable or relevant and appropriate requirements (ARAR) used represented acceptable concentrations for a sensitive receptor living in the area. Some the site-related chemicals were above their respective ARARs, and a number of the chemicals that were below their respective ARARs have similar toxicological endpoints. The additive toxicological effects may have a significant impact on human health. The potential impacts of these chemicals on human health should be evaluated using a quantitative risk assessment and site-specific exposure scenarios.

Chemicals in the groundwater at this site discharge into Paleta Creek. Published ARARs could not be found for all chemicals detected; therefore, published scientific literature should be used to establish acceptable water concentrations for the protection of marine life. Chemicals that did exceed their respective ARARs may have a potential impact on marine life. Therefore, groundwater modeling will be required to estimate the concentration of these chemicals in nearby surface waters.

Site 3 - Salvage Yard. The Salvage Yard is located between Cummings Road and Harbor Drive, with 4th Street being the northern boundary and Paleta Creek being the southern boundary. The site is an asphalt-covered parking area.

From 1943 to 1975, the Salvage Yard received and disposed of a variety of waste materials, primarily metal items such as drums, cans, transformers, metal casings, and metal housings containing liquid wastes were processed at the site. Any waste that could not be sold, reused, or donated was designated for burning in one of the two on-site incinerators located in the northern end of the yard.

According to the IAS and subsequent studies, TPHs and PCBs were detected in some of the soil samples.

Under the NACIP program, a verification step investigation was conducted at Site 3 - Salvage Yard. The verification step field work was performed during October 1987. A draft report was prepared for Naval Energy and Environmental Support Activity (NEESA) in February 1988. The report concluded that contamination was found and that additional characterization should be performed.

During this SI, environmental sampling at the site was limited to sampling groundwater from three existing wells.

The mean hydraulic conductivity for Site 3 is 4.88×10^{-3} feet/minute, and the groundwater flow velocity is 2.9 feet/year.

From the data collected during the SI several chemicals were detected in the groundwater at this site. Evaluation of the potential for exposure suggests that primary human exposure routes are limited to on-site occupational exposure pathways. Groundwater modeling will be required to determine if concentrations in the groundwater will be diluted to concentrations that are within acceptable limits for the protection of aquatic populations in nearby surface waters.

Site 4 - DPDO Storage Yard. The DPDO Storage Yard area consists of approximately 4 acres located east of Harbor Drive and adjacent to the north bank of Paleta Creek. Presently, two warehouses are located near the center of the site with the area south of these being used

as a boat storage yard and the area north being used as a material recycling area. The ground surface is generally flat. Surface runoff drains directly into Paleta Creek.

An estimated 35,000 to 75,000 gallons of oils were spread on the site. This oil consisted of waste petroleum, oils, and lubricants (POL). In addition, containers of electrical insulating oils were stored at the site during the 1970s. Some of the containers reportedly leaked, but no estimated quantities are available. The IAS reports that some of the leaky containers may have been mixed with the POLs. Drummed material containing paints, lube oils, and PD-680 solvent was also stored at the site. These items along with the POLs constitute the possible contaminant sources at the site.

A study conducted in June 1987 indicated the presence of polynuclear aromatics (PNA) at concentrations ranging from 3 to 14 parts per million (ppm) in all samples. In addition, the results indicated elevated metal concentrations.

Eight soil borings and four monitoring wells were installed as part of this SI. In addition, three sediment samples were collected from the on-site drainage ditch. The site is predominantly underlain by sands from ground surface to approximately 10 feet below ground surface. Slight amounts of refuse were encountered at the east and west ends of the site. There was a noticeable lack of shell fragments in the fill material as compared to the other sites.

Hydraulic conductivity ranged from 5.9×10^{-4} to 5.3×10^{-3} feet/minute, with a mean of 2.3×10^{-3} feet/minute, and the groundwater flow velocity is computed to be approximately 10.1 feet/year.

Chemicals of potential concern at this site include organics, heavy metals, fuels, and Stoddard solvent. Presently, site-related chemicals in soils are isolated from human receptors because the site is mostly paved. Therefore, it is concluded that no immediate threat to human health or the environment presently exists. A quantitative risk assessment using site-specific exposure models is required to evaluate the potential future risk to human health.

A review of the published scientific literature will be required to estimate acceptable exposure concentrations for carbon disulfide, antimony, beryllium, cadmium, and Stoddard solution. Groundwater modeling will also be required to determine the final concentrations of chemicals of potential concern migrating toward surface water features and into San Diego Bay.

Site 7 - Sewer Plant Site. The Sewer Plant Site is located between Harbor Drive and Knowlton Williams Road within NAVSTA San Diego. The site is bordered on the northwest by the Public Works Center (PWC) and on the southeast by Vesta Street.

The Sewer Plant Site lies on a tidal flat that has been reclaimed through man-made placement of hydraulic and conventional fill material. The fill material includes construction debris and soil mixed with gravel. A small portion of the north and west perimeters of the site is covered with asphalt.

The Sewer Plant was designed and constructed between 1948 and 1951. The Sewer Plant was in operation for approximately 10 years. The reason for deactivation and relocation of the plant is unknown.

Aerial photographs of the site and design drawings for the Point Loma Sewage Treatment Plant indicate that the original sewer plant was demolished between December 1977 and December 1978. The site remained a vacant lot until approximately 1983, when the southern half of the site was leveled and graded to accommodate parking. By 1985, the entire former sewage treatment plant had been converted into a parking lot. In 1987, a temporary building (118A) was constructed at the west-northwest perimeter of the site. A paved, fence-enclosed visitors' parking area was established between the visitors' parking area and a transformer station located at the southeast corner of the site.

A PA conducted by IT in 1989 indicated a potential for leaks and spills from tanks containing propane-butane, ferric chloride, and a storage building containing paint and oils. The PA noted a potential for spills or leaks from sewage storage and treatment tanks and pipelines. The sewage may have contained heavy metals and other potentially hazardous compounds .

Five soil borings and three monitoring wells were installed at the Sewer Plant Site during the SI field work. The site is mostly underlain with interbedded sands and clays with silts occurring at depth. A noted reduction in the content of shell remains in the soil relative to the Mole Pier. Rubble was encountered at soil boring BH01 through BH03 that lie in the west portion of the site.

Hydraulic conductivity ranged from 9.5×10^{-4} to 1.6×10^{-4} feet/minute, with a mean of 1.3×10^{-3} feet/minute, and the groundwater flow velocity is approximately 1.1 feet/year toward San Diego Bay.

Contamination by organic compounds is common at the Sewer Plant. Xylenes, carbon disulfide, 2-butanone, and toluene are reported from three soil borings. PAHs, chlorinated hydrocarbons, PCBs, and pesticides, and lead and mercury are found at elevated concentrations in soils. Groundwater at the site exhibits impact by volatile and semivolatile compounds found in the soil. Dibutyl chlorendate is also found in groundwater; however, a source this compounds in soil is not evident. Groundwater does not appear to exhibit impact by PCBs or the pesticides found in soil at this site.

Primary pathways for human exposure via soil ingestion, inhalation, dermal contact, or groundwater ingestion have been determined to be inviable or to pose an insignificant exposure potential. Aquatic organisms appear to be the only primary receptors of discharge of contaminated groundwater to Paleta Creek and San Diego Bay. Exposure of aquatic organisms to the contaminants in groundwater may cause deleterious effects.

Site 8 - Fire Fighter Training Facility. The Fire Fighter Training Facility is located between Southhall Street and Seifert Place and is northwest of Pier No. 8. The site is currently used for fire fighter training exercises. These operations have been conducted at the site since the late 1940s.

The site is generally asphalt paved with exception of the gravel/soil-covered area on the north end of the site near a 28,000-gallon vaulted tank (No. 13) that contains jet petroleum grade 5 (JP-5) turbo fuel. In addition to various buildings and training facilities, there are several underground storage tanks (UST) (installation prior to 1972) that are used for the collection and storage of wastewater from training exercises. Two concrete pads (flight decks) were used in the past for fire fighting training exercises. Prior to 1972, training exercises were conducted using open flame. Presently, all training fires are conducted in enclosed structures equipped with effluent air reburners and scrubbers that reduce air emissions produced by the training fires.

The PA conducted by IT in 1989 indicated that material used in the past at the site includes fuels and fire extinguishing materials. The PA further identified past potential hazards to include surface spills to storm sewers that discharged into the San Diego Bay, the spraying of fuel and fire fighting foam in open areas with subsequent infiltration into the soil, and leaks from USTs into the soil and groundwater.

As part of the SI field work, five soils borings were installed, and the existing seven monitoring wells were sampled. The site is underlain by a well-sorted silty sand, with gravel and shell fragment inclusions. Unlike three other sites of interest with similar geology, none of the boring logs at this site indicate the presence of refuse. As was the case at the three other sites, the clays and silts beneath this site are very discontinuous.

Hydraulic conductivity ranged from 6.3×10^{-4} to 3.2×10^{-3} feet/minute, with a mean of 4.9×10^{-4} feet/minute, and the groundwater flows toward the San Diego Bay at a velocity of approximately 3.2 feet/year.

Chemicals of potential concern at this site includes organics, heavy metals, and fuels. The potential chemicals of concern in soils is limited to subsurface soils that are covered with either clean soils or asphalt. Site 8 is mostly paved where the fire training exercises are conducted, and the remainder of the site to the north west is covered with a soil/gravel mix. Because this site is covered, it is unlikely that an individual working in the area would be exposed unless that individual is working within an excavation. Such an individual may be exposed via direct dermal contact, inadvertent ingestion of soils, and inhalation of volatile organics vaporizing from the soils. Therefore, the chemicals present in soils do not pose an apparent risk to human health under present or potential future receptor populations.

A review of the published scientific literature will be required to estimate acceptable exposure concentrations for acetone, antimony, barium, beryllium, chromium, molybdenum, and zinc. Groundwater modeling will also be required to determine the final concentrations of chemicals of potential concern to environmental receptors in San Diego Bay.

Based on the data evaluated as part of this SI, site-related chemicals at the previously discussed sites do not pose an apparent immediate threat to human health or the environment. However, it is recommended that a HRS score be completed for all five sites and that they proceed with an RI as required under the Navy IRP.

1.0 Introduction

1.1 Purpose of Report

This document reports the findings of a site inspection (SI) conducted at Naval Station (NAVSTA) San Diego. The SI was conducted to evaluate sites identified during an Initial Assessment Study (IAS) or preliminary assessment (PA) and determine if any of the sites pose a potential threat to public health or the environment, to determine the need for removal actions, to collect sufficient data for proper Hazard Ranking System (HRS) scoring purposes, and to determine if remedial investigations/feasibility studies (RI/FS) are necessary for each site.

Five sites were identified as requiring an SI at NAVSTA San Diego, California. Three of these sites, Site 2 - Mole Pier, Site 3 - Salvage Yard, and Site 4 - Defense Property Disposal Office Storage Yard (DPDO Storage Yard), were identified in the IAS for NAVSTA. The IAS was conducted under the former Navy Assessment and Control of Installation Pollutants (NACIP) program. The remaining two sites, Site 7 - Sewer Plant Site and Site 8 - Fire Fighter Training Facility, were identified in a PA for NAVSTA (Department of the Navy, 1989).

A verification step investigation was conducted at Site 3 - Salvage Yard. The verification step is the first characterization step following an IAS as defined by the NACIP program. The verification step field work was performed during October 1987. A total of 46 soil samples and 4 groundwater samples were collected during the verification step investigation. A draft report (NEESA, 1988) concluded that contamination was found and that additional characterization should be performed. For the results of the field and analytical characterization of the Salvage Yard, see NEESA 21-004, Verification Step Report, Naval Station - Salvage Yard, San Diego, California, Volume 2.

1.2 Base Location and History

The Naval Station is approximately 3 miles southeast of the center of San Diego City and 10 miles north of the border between the United States and Mexico. The approximate boundaries of the station are the City of San Diego to the north, National City to the east and south, and San Diego Bay to the west (Figure 1-1).

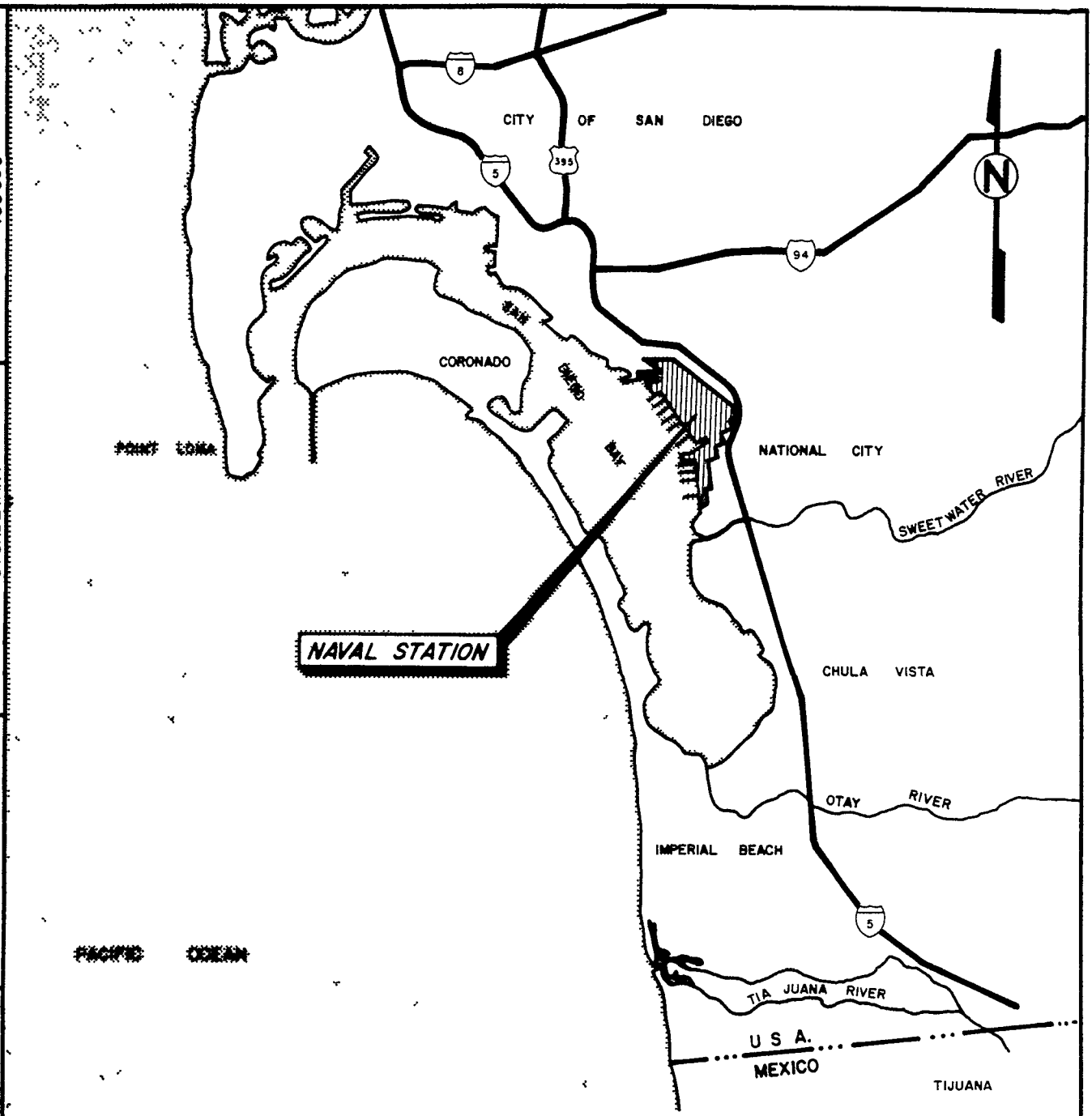

STARTING DATE: 7-19-89	DATE LAST REV.:	INITIATOR: M. STURDEVANT	DRAWING NO 409635-A-C01
DRAWN BY: D HIGGS	DRAWN BY:	PROJ. MGR M STURDEVANT	PROJECT NO.: 409635

FIGURE 1-1

BASE LOCATION MAP

NAVAL STATION
SAN DIEGO, CALIFORNIA

INTERNATIONAL TECHNOLOGY CORPORATION

KD01462

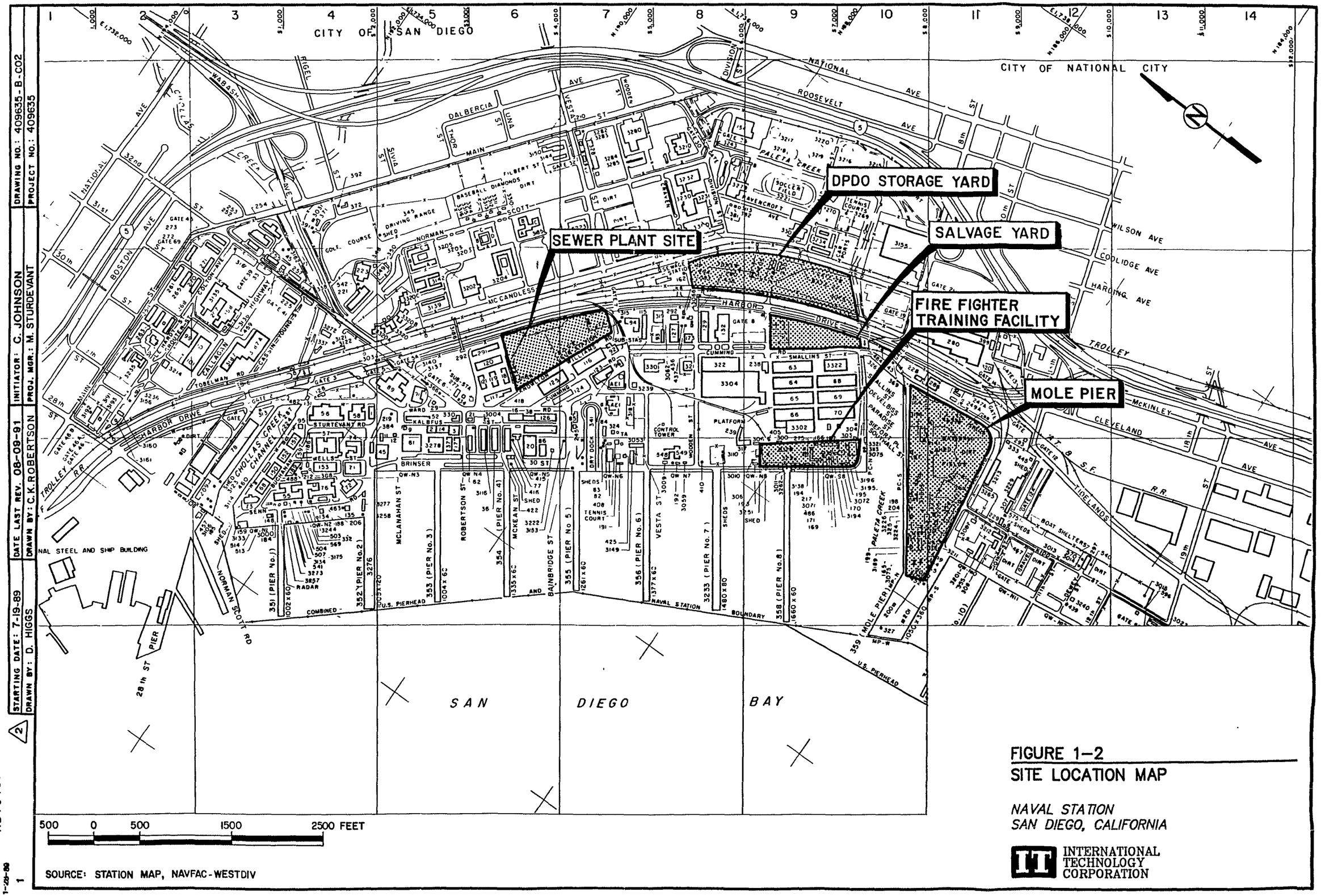

SOURCE: STATION MAP, NAVFAC-WESTDIV

FIGURE 1–2
SITE LOCATION MAP

NAVAL STATION
SAN DIEGO, CALIFORNIA

INTERNATIONAL TECHNOLOGY CORPORATION

DRAWING NO.: 409635-B-C02
PROJECT NO.: 409635
INITIATOR: C. JOHNSON
PROJ. MGR.: M. STURDEVANT
DATE LAST REV.: 08-09-91
DRAWN BY: C.K. ROBERTSON
STARTING DATE: 7-19-89
DRAWN BY: D. HIGGS

KD01467
11-22-89
1

NAVSTA began operations in 1919 as a docking/fleet repair base for the U.S. Shipping Board. In 1921, the Navy acquired the land for use as the San Diego Repair Base. From 1921 until the early 1940s, the station expanded as a result of land acquisitions and facilities development programs. With approximately 823 acres and 28,000 linear feet of berthing space, the repair base was redesignated NAVSTA in 1946.

Currently, NAVSTA consists of 1,127.2 acres and provides personnel and logistic support services for 25 major tenant commands and subsistence for several naval activities at other locations.

1.3 Base Physical Characteristics

1.3.1 Regional Geologic Setting

Geologically, the sites involved in this investigation have mostly been reclaimed through man-made placement of hydraulic and conventional fill material. The fill material includes construction debris, concrete, asphalt, and soil mixed with gravel.

Based on the IAS report (NEESA, 1986) and the nearby benchmark elevations (Department of Navy, 1978), the installation's topographic relief is nearly flat. The average elevation appears to be approximately 10 feet above the mean lower low water (MLLW) level.

The regional geology of the San Diego Region is characterized by sedimentary, meta sedimentary, and meta volcanic rocks that have been intruded by an immense batholith. The igneous rocks form the higher portions of the mountains east of San Diego. Subsequent to the emplacement of the batholith, uplift and extensive erosion created thick immature sedimentary basis building into the Pacific Ocean. During the late Cretaceous and Tertiary periods, uplift and compressional tectonic forces folded the unconsolidated sediments. During Pleistocene time, continued uplift and compression resulted in migration of the sedimentary basins westward and erosion of the uplifted sediments (W. Gianelli, 1967). In recent geologic time, erosion of the terrace deposits and highland areas by stream drainage has resulted in the present conditions at NAVSTA.

1.3.2 NAVSTA Hydrogeologic Units

Previous geotechnical studies of the site have revealed five hydrogeologically identifiable zones within the upper 100 feet of soil. These zones are presented in order of increasing depth:

Existing Recent Fill. This material was found at 1 to 10 feet below ground surface and consists of silty fine sand and clay with minor amounts of clayey silt and silty clay.

Hydraulically Placed/Dredged Fill. This material can be found at the surface and underlying the recent fill. The IAS indicates that the hydraulic fill was initially emplaced in the 1920s with additional fill occasionally being added into the early 1940s (NEESA, 12-087). The purpose of the fill was to create land from parts of the bay and mud flats.
Clean to silty sand with clay balls and shell fragments characterize the hydraulic fill. Its thickness ranges from approximately 6.5 to 15 feet (NEESA, 13-087). Hydraulic conductivity valves range from 10^{-7} to 10^{-3} feet per second.

Bay Deposits. This material consists of silty to clean sand with thin lenses of stiff clay and clayey silt. The approximate thickness is 10 feet, and the unit has a hydraulic permeability similar to that of the overlying hydraulically placed fill.

Quaternary Terrace. This material consists of brownish silty sand to olive-gray, clayey sand with sandy silt. The thickness of this material ranges between approximately 4 and 50 feet. Hydraulic conductivities range from 10^{-8} to 10^{-4} feet per second.

Bay Point Formation. This material consists of silty to clean sands with some silt and clays. The thickness of this material extends below the maximum depth (101.5 feet) of previous investigations.

1.3.3 Surface Hydrology

Four intermittent surface streams drain watersheds that are tributary to the Bay in the immediate eastern and upland areas near NAVSTA San Diego. All of the creeks (Lower Chollas, Lower South Chollas, Paleta, and Paradise) receive some runoff collected by drainage along Harbor Boulevard. The lower reaches of the creeks are known to be influenced by the tides in San Diego Bay, and the contained water is saline. The upper reaches of the creeks are intermittent streams, flowing only during wet periods. The entire

length of these streams accepts urban runoff during stormy periods. The water quality of the streams probably reflects the entrainment of the urban runoff. The streams have no designated existing or potential beneficial use.

1.3.4 Land Use

Land use along the port immediately north and south of the NAVSTA San Diego consists of industrial establishments. Commercially zoned lands are found along the major thoroughfares (Harbor Drive, Main Street, and National Avenue). Beyond the facility to the east and Northeast, the area is primarily residential.

1.3.5 Climatic Characteristics

Climatological data from the National Oceanic and Atmospheric Administration (NOAA) weather stations in San Diego and Chula Vista (NOAA, 1985a) report the average annual rainfall around San Diego Bay to be approximately 9 inches per year. Eighty-five percent of this rainfall occurs from November through March, indicating relatively wet winters and dry summers. The average monthly temperature is approximately 64°F, with September and October recording the highest average monthly temperatures. The evaporation potential for the San Diego area is approximately 64 inches per year. The average wind speed is 6.8 miles per hour with the prevailing wind direction being west to northwest. Due to the latitude of the bay, strong winds and gales associated with the Pacific Ocean or with tropical storms are infrequent.

1.4 Site Background Information

1.4.1 Site 2 - Mole Pier

Mole Pier is located at the southern end of NAVSTA (Figure 1-2). It is located between Paleta Creek to the north and Mole Road to the south (Figure 1-3). Grading in recent years has created a relatively flat ground surface. The western third of the site is currently occupied by various maintenance and storage buildings. Other office and storage buildings are located near the northern boundary along 7th Street. The central and remaining portions of the site contain ball fields, other outdoor recreation facilities, and parking areas.

According to the IAS report, Mole Pier was created in 1942 with hydraulic fill material. Groundwater levels at the site are approximately 10 to 11 feet below the surface. The area is delineated as a diked disposal area on a 1958 station map. Aerial photographs taken between

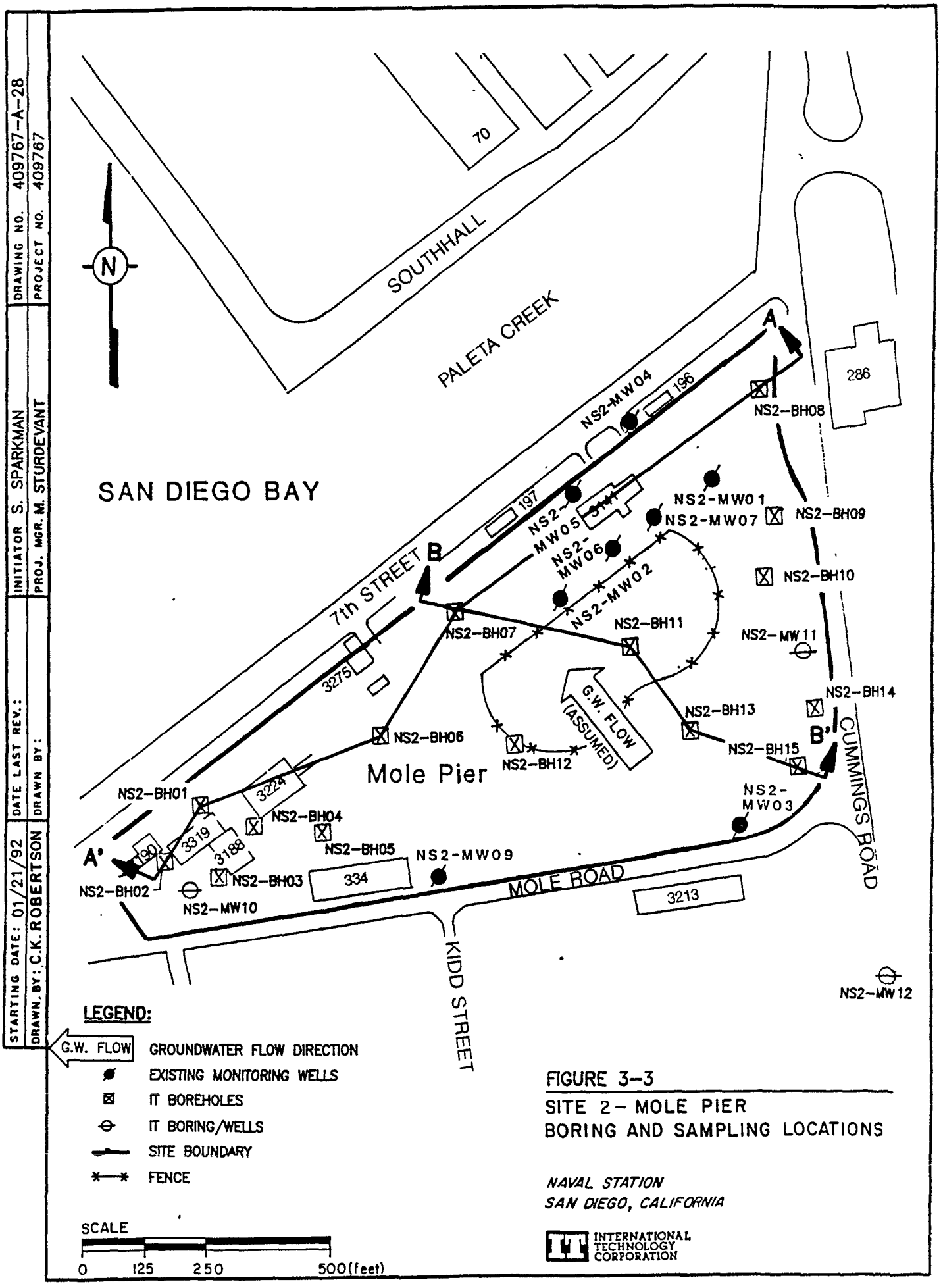

FIGURE 3-3

SITE 2 - MOLE PIER
BORING AND SAMPLING LOCATIONS

NAVAL STATION
SAN DIEGO, CALIFORNIA

1949 and 1981 indicate that approximately three-fourths of the site bounded by Mole Road, Cummings Road, 7th Street, and Mole Pier was diked; however, activity appears to be occurring inside and outside the diked area. From approximately 1945 to 1972, the site was used for the disposal and open burning of various demolition debris and hazardous waste. Disposal was discontinued in 1972. In the late 1970s, however, trucks and heavy equipment returning from Vietnam were routinely cleaned in the area of the present ball fields (Figure 1-3). Cleaning of this equipment consisted of spraying with diesel fuel and rinsing it in Paleta Creek.

Aerial photographs indicate that disposal efforts were concentrated at the eastern and western portions of the site with less activity occurring in the center. Records indicate that the eastern third of the site was used primarily for the disposal of noncombustible waste. Diesel fuels and motor oils were sprayed in the area for dust control. Combustible and hazardous wastes were mainly disposed of in the western third of the site. Debris disposed of included pilings, lumber, concrete, asphalt, and various other combustible and noncombustible materials from the Naval Repair Facility, Public Works Center (PWC) and station maintenance operations. Open burning was conducted for an undetermined number of years. Gasoline, motor oil, and diesel oils were used to assist in the burning of combustible refuse and debris. An inventory of wastes burned or buried as reported in the IAS is given in Table 1.4-1. An estimated 540,000 gallons of petroleum-based materials were transported to the site for disposal.

According to the IAS, evidence of subsurface contamination was noted in 1973 during the foundation investigation for Building 3224. Two soil borings from this investigation penetrated soils "soaked with oils" that exhibited strong gaseous odors at depths of 5 and 9 feet.

In 1985/1986, Leighton and Associates, Inc. (L&A) conducted an assessment of the soil and groundwater conditions at Mole Pier near Building 3141 (L&A, 1986). Heavy metals, organic lead, and total petroleum hydrocarbons (TPH) were detected in soil samples. A high concentration of TPH was detected in one sample. Low concentrations were detected in the other samples. All soil samples also contained detectable quantities of semivolatile organics. Three monitoring wells were installed during the investigation (Figure 1-3). These wells range in depth from 22 to 25 feet with 15 feet of 0.02-inch slotted screens. Analyses of groundwater collected from these wells detected trace to low amounts of heavy metals, TPH, organic lead, total phenols, and various volatile and semivolatile compounds. None of the

Table 1.4-1

Wastes Disposed of at Mole Pier*

Waste	Contaminant	Time Period	Estimated Total Quantity
Motor oils, diesel fuel, gasoline, hydraulic fluid	Petroleum hydrocarbons (TPH), aromatic hydrocarbons (BTX), polyaromatic hydrocarbon (PAHs)	1945-1964	540,000 gallons
Stoddard solvent	Trichloroethylene, alcohols, methyl ethyl ketone (MEK), carbon tetrachloride	1945-1972	3,000 gallons
Mixed solvents	Acetone, MEK, toluene, methylene chloride	1945-1970	7,000 gallons
Mineral spirits	Aromatic hydrocarbons	1967-1970	18,000 gallons
Carbon remover	Phenol, cresol, chlorinated hydrocarbons, chromium	1945-1972	4,500 gallons
Chlorinated solvents methylene chloride, unidentified	Chlorinated solvents	1945-1972	23,400 gallons
Sandblast grit	Metals	1950-1972	3,020,000 pounds

*These wastes have been burned or buried. List excludes refuse and lumber disposed of at site.

Sources: IAS, NAVSTA San Diego, California, May 1986; Merck Index (Windholz, 1983).

groundwater analyses detected concentrations of contaminants above established state or federal drinking water standards or action levels.

Six monitoring wells were installed at Mole Pier by Woodward-Clyde Consultants (WCC) in 1986. The approximate locations of these wells are shown in Figure 1-3. The WCC report identifies these wells as "Combined Geotechnical and Hazardous Waste Test Borings with Monitoring Well" (WCC, 1987b). However, no chemical sampling and analysis is presented in this report.

1.4.2 Site 3 - Salvage Yard

The Salvage Yard is located between Cummings Road and Harbor Drive, with 4th Street being the northern boundary and Paleta Creek being the southern boundary (Figure 1-4). The site is an asphalt-covered parking area.

The Salvage Yard has been in operation since 1943 processing naval scrap metal for sale off site. From 1943 to 1975, the Salvage Yard received and disposed of a variety of waste materials other than metals. Since 1975, only relatively clean or waste-free metal for conversion to scrap has been accepted at the Salvage Yard. Before 1975 metal items such as drums, cans, transformers, metal casings, and metal housings containing liquid wastes were processed at the site. Leakage and spillage were common; in some cases wastes were simply poured out at the site. Any waste that could not be sold, reused, or donated was designated for burning in one of the two on-site incinerators located in the northern end of the yard.

Aerial photographs of NAVSTA from the years 1949, 1950, 1953, 1960, 1972, and 1981 indicate a wide variety of activities at the site. Most of the Salvage Yard was apparently used for the temporary storage of material, particularly the area south of the fence line that crosses the site. The aerial photographs also indicate that 55-gallon drums have been stored in all areas of the site. This is particularly evident in the 1972 photographs.

Two structures that appear to be incinerators that were reportedly present at the site are evident in the photographs. One incinerator appears to have been built as a large permanent structure with a single smoke stack. This incinerator is evident in the aerial photographs from 1949 to 1981. What appears to be the second incinerator consists of two circular, enclosed structures adjacent to each other. Apparently objects were placed inside the structures and burned.

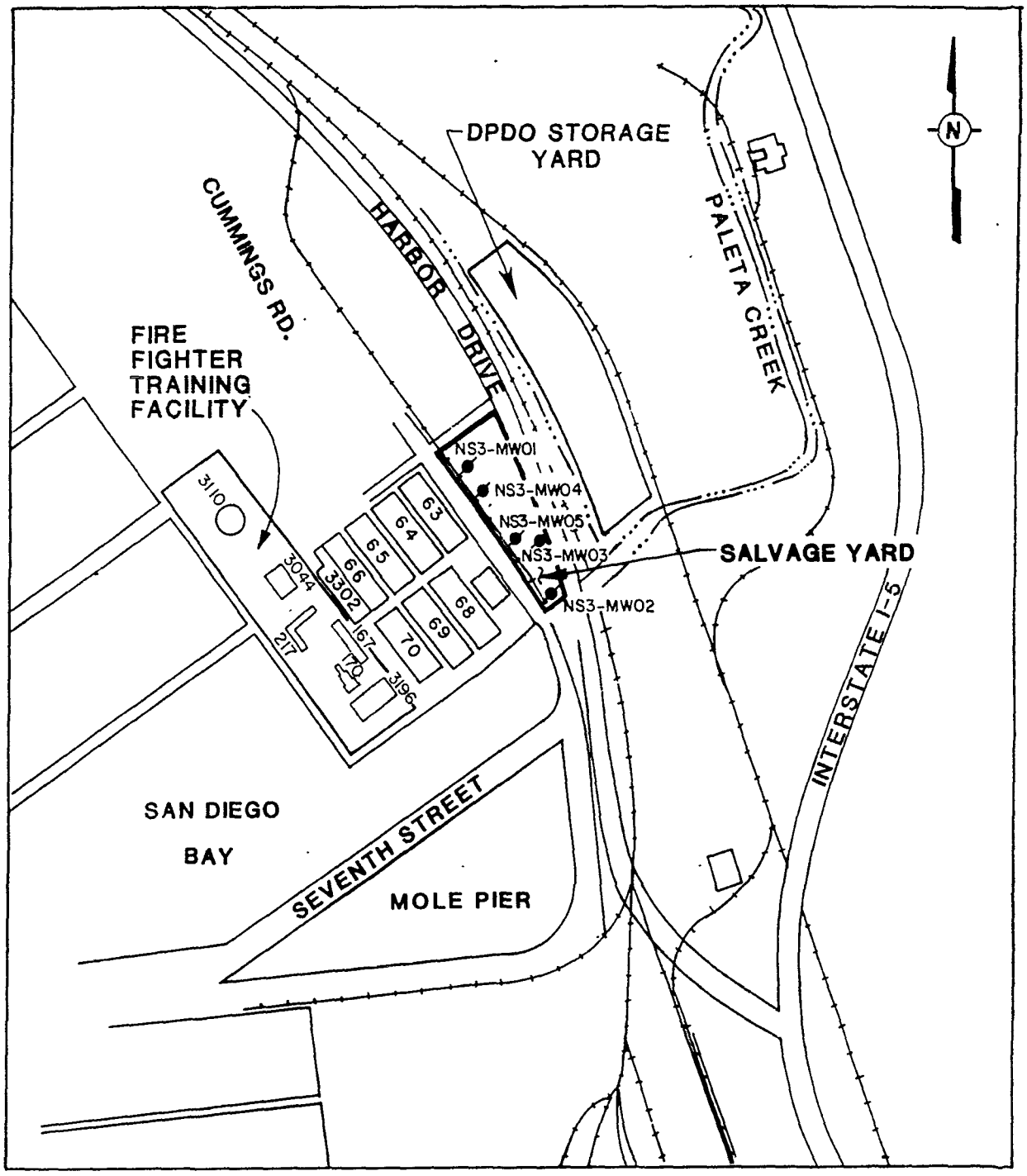

LEGEND

—·—·— CREEK OR DRAINAGE CHANNEL

—×—×— RAILROAD

EXISTING MONITORING WELLS

SCALE

0 1 mile

FIGURE 1-4

SITE 3-SALVAGE YARD

NAVAL STAION
SAN DIEGO, CALIFORNIA

INTERNATIONAL TECHNOLOGY CORPORATION

STARTING DATE: 11-10-89	DATE LAST REV.:	INITIATOR: S. CARR	DRAWING NO.: 409635-A-C23
DRAWN BY: C.K. ROBERTSON	DRAWN BY:	PROJ. MGR. M. STURDEVANT	PROJECT NO.: 409635

KD01466

According to the IAS (NEESA, 13-087), analysis of soils in 1975 or 1976 at the Salvage Yard indicated polychlorinated biphenyl (PCB) contamination. As a result of this analysis, the top 8 inches of contaminated soil was removed and the site paved over with asphalt. Apparently no soil samples were collected to ensure that all PCB-contaminated soil was removed. The IAS report indicates that the excavated area was approximately 200 feet long and 150 feet wide and was located in the vicinity of the dual incinerators. Records containing confirmatory evidence of the sampling event and subsequent soil excavation were not available.

In 1985, L&A conducted an assessment of the soil and groundwater conditions at the Salvage Yard (L&A, 1986). Their investigation was confined to the northern portion of the site within the footprint of a proposed cold storage facility. The L&A limited investigation identified organic lead in one soil sample at concentrations above the total threshold limit concentration (TTLC) established by the State of California (California Administrative Code [CAC]) now known as California Code of Regulations (CCR). TPHs and PCBs were also detected in some of the soil samples. Groundwater samples were found to contain TPH, organic lead, phenols, and various volatile and semivolatile compounds. With the exception of vinyl chloride, which was detected at an estimated value of 9 parts per billion (ppb), none of the groundwater samples contained contaminants in concentrations above state drinking water standards or Department of Health Services' (DHS) action levels.

The Navy is planning to use the southern portion of the site (south of the fence that crosses the site) for vehicle parking. All materials and buildings have been removed from the southern portion to accommodate this future use. The norther portion of the site is currently being used for vehicle parking.

A verification step field investigation was conducted in October 1987 in support of an expedited military construction project, and a draft report prepared for NEESA in February 1988 (NEESA, 1988). The report concluded that contamination was present in the soil and groundwater and that additional studies should be performed. As part of this past field investigation, five monitoring wells were installed at the locations shown in Figure 1-4.

1.4.3 Site 4 - Defense Property Disposal Office Storage Yard

The DPDO Storage Yard area consists of approximately 4 acres located east of Harbor Drive and adjacent to the north bank of Paleta Creek (Figure 1-5). Presently, two warehouses are located

near the center of the site with the area south of these being used as a boat storage yard and the area north being used as a material recycling area. The ground surface is generally flat. Surface runoff drains directly into Paleta Creek. The site was designated as a Naval Supply Center (NSC) storage yard from 1943 to 1975; from 1975 to 1981 the site served as a DPDO Storage Yard. Since 1981, the northern portion has been used to store land craft.

In 1975, the site was almost completely paved. The pavement has deteriorated over the years and is presently cracked and pitted in many locations. Before paving, the surface was oiled regularly as a dust control measure. An estimated 35,000 to 75,000 gallons of oils were spread on the site. This oil consisted of waste petroleum, oils, and lubricants (POL). In addition, containers of electrical insulating oils were stored at the site during the 1970s. Some of the containers reportedly leaked, but no estimated quantities are available. The IAS reports that some of the leaky containers may have been mixed with the POLs. Drummed material containing paints, lube oils, and PD-680 solvent was also stored at the site. These items along with the POLs constitute the possible contaminant sources at the site. The types of contaminants that may be present at the site as a result of past activities are shown in Table 1.4-2.

In June 1987, WCC (1987a) collected eight subsurface soil samples and one surface sample from a total of nine geotechnical boreholes at the DPDO Storage Yard. The maximum sample depth was 10 feet. Each sample was analyzed for volatiles, semivolatiles, pesticides, PCBs, total phenols, and 13 metals. The results indicated the presence of polynuclear aromatics (PNA) at concentrations ranging from 3 to 14 parts per million (ppm) in all samples. In addition, the results indicated elevated metal concentrations; however, background soil samples were not collected to confirm this. According to organic vapor meter (OVM) readings, hydrocarbons were detected in several samples but were not quantitatively measured. Monitoring wells were not installed at the site.

1.4.4 Site 7 - Sewer Plant Site

The sewer plant site is located between Harbor Drive and Knowlton Williams Road within NAVSTA (Figure 1-6). The site is bordered on the northwest by the PWC and on the southeast by Vesta Street.

Geologically, the sewer plant site lies on a tidal flat that has been reclaimed through man-made placement of hydraulic and conventional fill material. The fill material includes

Table 1.4-2

Wastes Disposed of at DPDO Storage Yard

Waste	Contaminant	Time Period	Estimated Total Quantity
Waste oils	TPH, metals	approx. 1943-1975	35,000 to 75,000 gallons
Electric insulating oils	PCBs, trichlorobenzenes	1970s	Unknown
Paints	Metals	1970s	Unknown
PD-680 (dry cleaning solvent)	Petroleum hydrocarbon	1970s	Unknown

Source: IAS, NAVSTA San Diego, California, May 1986.

STARTING DATE: 9/26/89	DATE LAST REV.: 11-28-89	INITIATOR: M.Bolton	DRAWING NO.: 409635-A-C11
DRAWN BY: C. HINSHAW	DRAWN BY: C.K. ROBERTSON	PROJ. ENGR. M.Sturdevant	PROJECT NO.: 409635

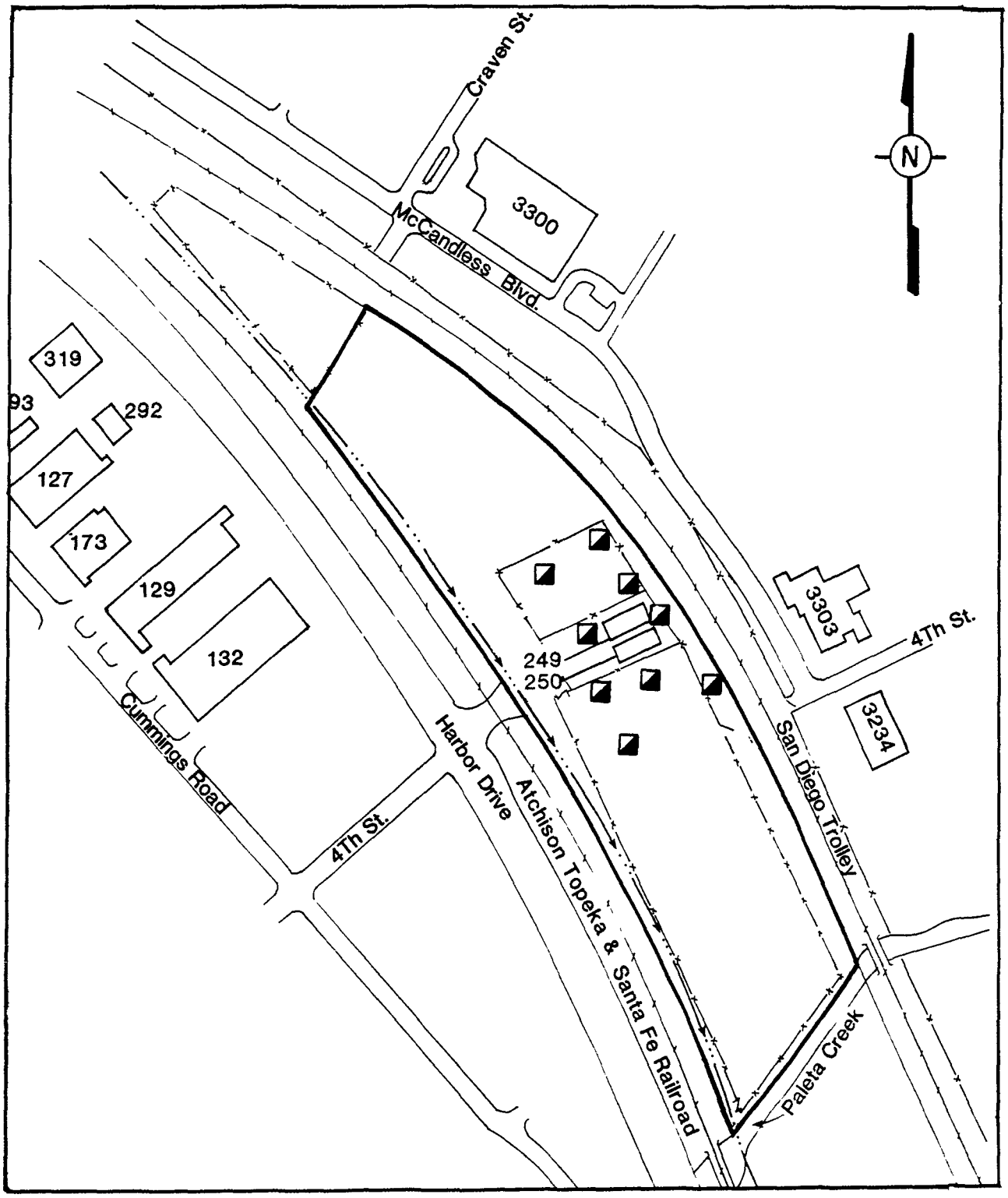

LEGEND

SITE BOUNDARY

FENCE

CREEK OR DRAINAGE CHANNEL

PAST BOREHOLES

SCALE

200 0 200 feet

FIGURE 1-5

SITE 4-DPDO STORAGE YARD

NAVAL STAION
SAN DIEGO, CALIFORNIA

INTERNATIONAL TECHNOLOGY CORPORATION

KD01465

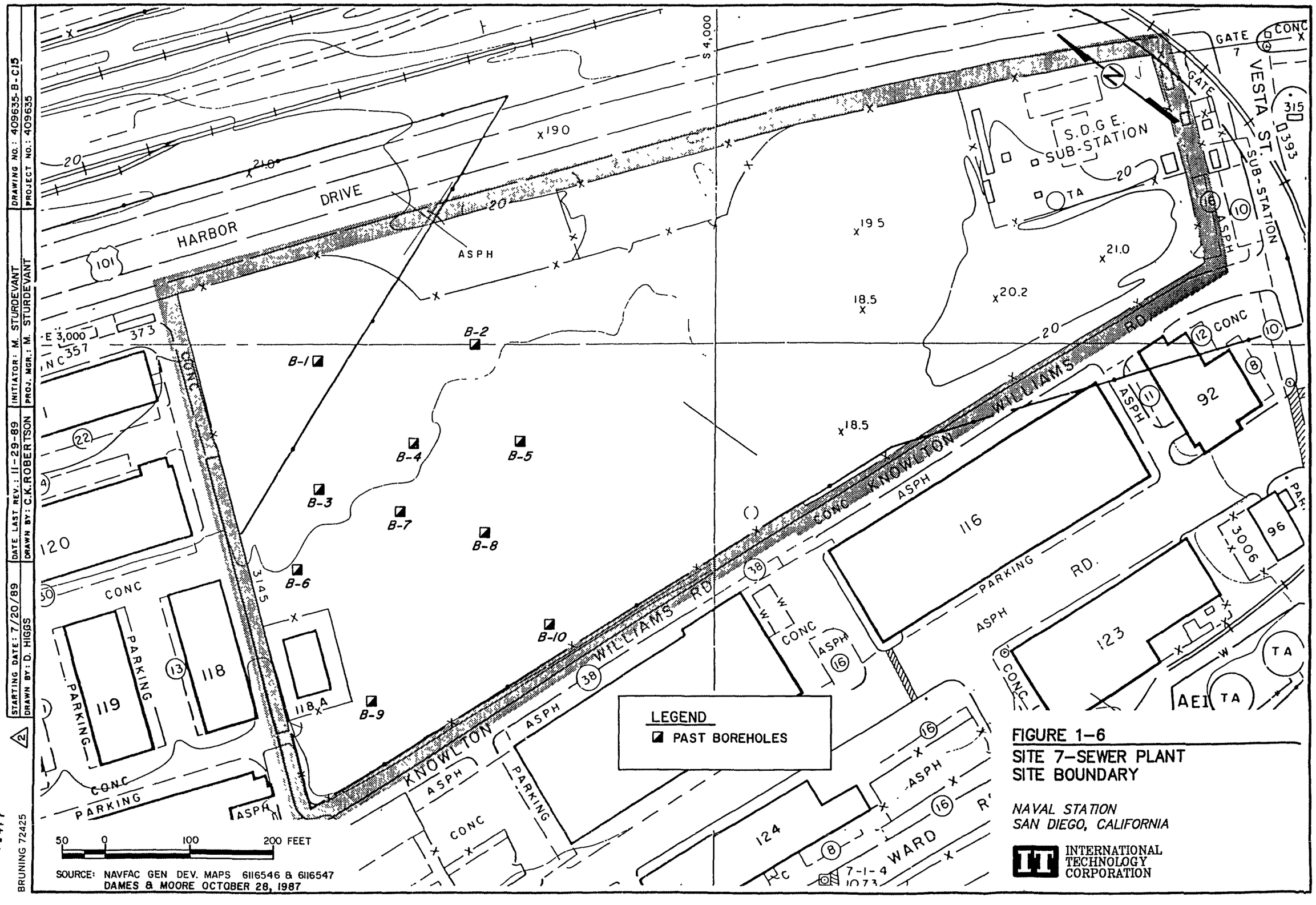

FIGURE 1-6
SITE 7-SEWER PLANT
SITE BOUNDARY

NAVAL STATION
SAN DIEGO, CALIFORNIA

INTERNATIONAL TECHNOLOGY CORPORATION

construction debris and soil mixed with gravel. A small portion of the north and west perimeters of the site is covered with asphalt. Groundwater may be encountered between 15 and 19 feet below land surface (Dames and Moore, 1987).

It has been determined from design and as-built drawings that the sewer plant was designed and constructed between 1948 and 1951. The sewer plant site was originally owned by the City of San Diego, California, which operated and maintained a municipal sewage facility from 1951 through 1963. When the Point Loma Sewage Treatment Plant became operational in 1963 (Konopke, 1989), the Harbor Drive Sewer Plant was deactivated. The Navy acquired the site in 1977.

Information derived from aerial photographs, the City of San Diego Design Engineering, and as-built drawings indicates that the sewage treatment plant consisted of various buildings and tanks including digesters, clarifiers, elutration tanks, sludge storage buildings, Detritor building, and other maintenance and administrative buildings (Figure 1-7).

The exact type of sewage treated at the plant is unknown. The sewer plant effluent was discharged into San Diego Bay near Pier No. 5. The sewer plant was in operation for approximately 10 years. The reason for deactivation and relocation of the sewage treatment plant is unknown.

Aerial photographs of the site and design drawings for the Point Loma Sewage Treatment Plant indicate that the original sewer plant was demolished between December 1977 and December 1978. The site remained a vacant lot until approximately 1983, when the southern half of the site was leveled and graded to accommodate parking. By 1985, the entire former sewage treatment plant had been converted into a parking lot. In 1987, a temporary building (118A) was constructed at the west-northwest perimeter of the site and a paved, fence-enclosed visitors' parking area was established between the visitor parking area and a transformer station located at the southeast corner of the site.

A geotechnical investigation of the site was conducted by Dames and Moore in 1987. Ten soil borings were drilled and sampled for geotechnical and chemical analysis (Figure 1-6). Analytical results from the soil samples indicated TPH concentration values of 27 to 7,900 ppm, and a coliform count by most probable number (MPN) ranged from nondetectable to 0.05 coliform per gram.

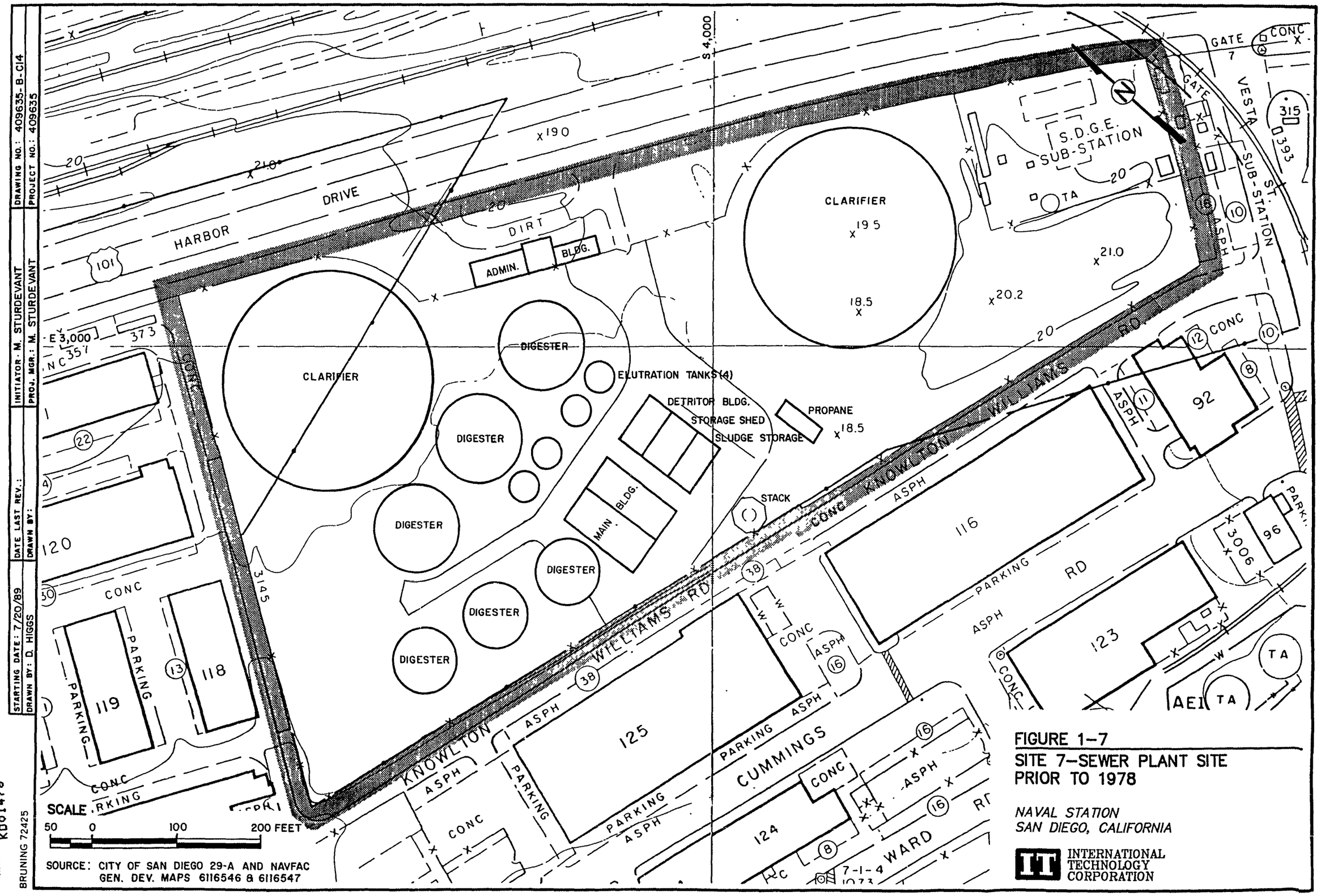

FIGURE 1-7
SITE 7-SEWER PLANT SITE
PRIOR TO 1978

NAVAL STATION
SAN DIEGO, CALIFORNIA

INTERNATIONAL TECHNOLOGY CORPORATION

A PA conducted by IT in 1989 indicated a potential for leaks and spills from tanks containing propane-butane, ferric chloride, and a storage building containing paint and oils. The PA noted a potential for spills or leaks from sewage storage and treatment tanks and pipelines. The sewage may have contained heavy metals and other potentially hazardous compounds (Department of Navy, 1989).

Table 1.4-3 identifies potential wastes and contaminants that may be present in the soil or groundwater at the site.

1.4.5 Site 8 - Fire Fighter Training Facility

The Fire Fighter Training Facility is located between Southhall Street and Seifert Place and is northwest of Pier No. 8 (Figure 1-8). The site is currently in use for fire fighter training exercises. These operations have been conducted at the site since the late 1940's.

The site is generally asphalt paved with the exception of the gravel/soil-covered area on the north end of the site near a 28,000-gallon vaulted tank (No. 13) that contains JP-5 turbo fuel (Figure 1-8). The JP-5 storage tank is circumscribed by an asphalt-coated earthen berm. This berm provides secondary containment with a total interior volume to the top of the berm of 42,000 gallons (Trend Engineering, 1978). The gravel/soil-covered area of the site surrounding the JP-5 tank is used for storing 55-gallon drums containing fire extinguishing chemicals.

In addition to various buildings and training facilities, there are several underground storage tanks (USTs) installed before 1972 used for the collection and storage of wastewater from training exercises (Figure 1-8). Two concrete pads (flight decks) were used in the past for fire fighting training exercises. Before 1972, training exercises were conducted using open flame. Presently, all training fires are conducted in enclosed structures equipped with effluent air reburners and scrubbers that reduce air emissions produced by the training fires.

Petroleum hydrocarbon material used at the Fire Fighter Training Facility includes diesel fuel used to heat Building No. 167 and approximately 3,500 gallons per week of JP-5 to fuel fires for training. The training fires last approximately 5 minutes each. Quench water from each exercise is directed to an oil/water separator system. The system consists of a series of four USTs for removal of particulates and reclamation. All de-oiled wastewater is directed into the sanitary sewer. Before 1988, the de-oiled wastewater, storm water runoff, and building

Table 1.4-3

Wastes Disposed of at the Sewage Plant Site

Waste	Contaminant	Time Period	Estimated Total Quantity
Oily waste	Oil and grease	1951-1961	Unknown
Unknown heavy metals	Metals	1951-1985	Unknown
Petroleum, oils, and lubricant (POL)	Petroleum, hydrocarbons, and metals	1951-1985	Unknown
Ferric chloride	Ferric chloride	1951-?	Unknown
Paint containers	Paint sludge, heavy metals, solvents	1951-?	Unknown
Propane	Propane	1951-?	Unknown
Butane cylinders	Butane	1951-?	Unknown
Sewage sludge	Metals, cyanide, PCBs, pesticides	1951-1961	Unknown

Source: IAS, NAVSTA San Diego, California, May 1986.

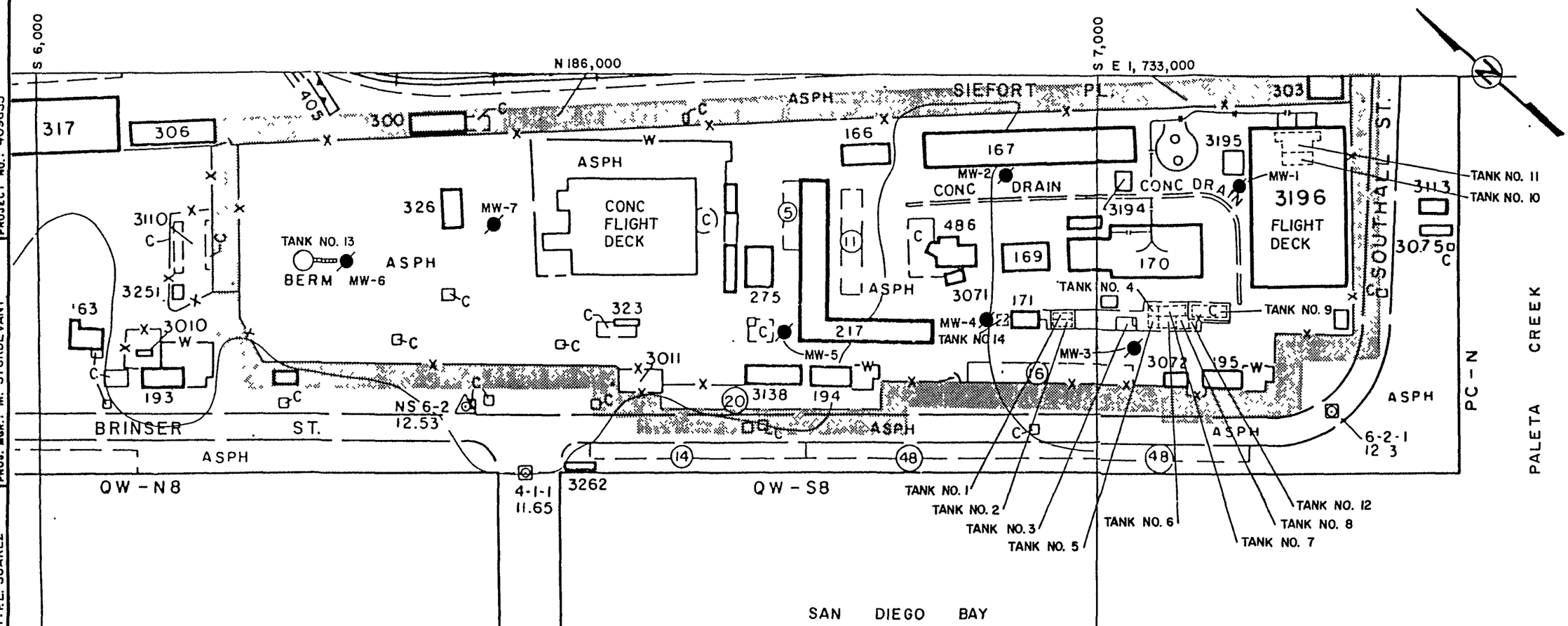

TANK SCHEDULE

TANK NO.	CAPACITY GAL.	REMARKS	MATERIAL	LOCATION
1	13750	STORM WATER CLARIFIER	CONCRETE	BURIED
2	13750	FINAL HOLDING TANK	CONCRETE	BURIED
3	10900	SLUDGE	CONCRETE	BURIED
4	3340	OIL SEPARATOR	CONCRETE	BURIED
5	5840	OIL SEPARATOR	CONCRETE	BURIED
6	3340	OIL SEPARATOR	CONCRETE	BURIED
7	11680	OIL RECLAIM TANK	CONCRETE	BURIED
8	2400	SUMP TANK	CONCRETE	BURIED
9	15000	WASTE WATER RECLAMATION	CONCRETE	BURIED
10	12600	FOAM SETTLING TANK	CONCRETE	BURIED
11	12600	FOAM SETTLING TANK	CONCRETE	BURIED
12	1800	FUEL (JP-5) TANK	STEEL	ABOVE GROUND
13	28000	FUEL (JP-5) TANK	STEEL	ABOVE GROUND
14	1500	DIESEL (ABANDONED)	CONCRETE	BURIED

FIGURE 1-8
SITE 8-FIRE FIGHTER TRAINING FACILITY SITE BOUNDARY

NAVAL STATION SAN DIEGO, CALIFORNIA

INTERNATIONAL TECHNOLOGY CORPORATION

washdown water was directed into a storm drain that discharged into the San Diego Bay. Under current practices, these waters are now directed for collection and storage within the UST system.

A geotechnical investigation and evaluation of the site was conducted by WCC in 1987. Groundwater levels were measured to depths ranging from 7.5 to 9 feet below ground surface. Seven soil borings were drilled, sampled, converted to groundwater monitoring wells, and developed and sampled during the investigation. Both soil and groundwater samples were submitted to a laboratory for analyses.

Analytical results from monitoring well (MW03) soil samples indicate that concentrations of TPHs range from below the analytical detection limit of 100 to 19,000 ppm (MW03). The high TPH value in the soil sample from MW03 corresponds to the depth where 2.7 feet of free product was later measured floating on the water table. One-half inch of free product was also noted floating on the water table in MW06. Groundwater samples from MW01, MW02, MW04, MW05, and MW07 did not result in detectable concentrations of TPH or PNA. However, analysis of the groundwater from MW04 detected 5.6 milligrams per liter (mg/L) of TPH. Purgeable aromatics were below the detection limit for this sample.

The PA conducted by IT in 1989 indicated that material used in the past at the site includes JP-4, ansulite, purple-K, purple K-PK, unknown caustic solution, oxygen breathing apparatus canisters, magnesium, and diesel fuel. Material currently used at the school includes JP-5, scrap 2-inch by 4-inch lumber, ansulites, purple-K, purple K-PK, unleaded gasoline, and diesel. The PA further identified past potential hazards to include surface spills to storm sewers that discharged into the San Diego Bay, the spraying of fuel and fire fighting foam in open areas with subsequent infiltration into the soil, and leaks from USTs into the soil and groundwater.

Table 1.4-4 identifies potential wastes and contaminants that are known to exist or potentially exist in the soil or groundwater at the site.

Table 1.4-4

Wastes Disposed of at the Fire Fighter Training Facility

Waste	Contaminant	Time Period	Estimated Total Quantity
POL	JP-4, JP-5, oil and grease, diesel, unleaded gasoline	1940s to present	Unknown
Caustic solution (unknown)	Unknown basic (high pH)	1940s to present	Unknown
Oxygen breathing apparatus cannisters	Unknown	1940s to present	Unknown
Ansulite	Ansulite	1940s to present	Unknown
Purple K	Purple K	1940s to present	Unknown
Purple K-PK	Purple K-PK	1940s to present	Unknown
Magnesium	Magnesium	1940s to present	Unknown
Asbestos afterburner seals	Asbestos	1940s to present	Unknown

Source: IAS, NAVSTA San Diego, California, May 1986.

2.0 Field Program

2.1 General Approach

The SI activities were conducted by the procedures and guidelines established in the Site Inspection Work Plan (IT Corporation [IT], October 1990), which is composed of the Work Plan, Quality Assurance Project Plan (QAPP), and Health and Safety Plan (HSP). The Work Plan describes the rationale, methods, equipment, and testing protocol that were followed for all field investigation activities.

2.2 Variances to the Work Plan

Documentation of changes to the Work Plan are recorded on variance logs. Variances were reviewed and preapproved by all levels of project personnel before implementing the change. When variances were not approved through IT's policy procedures, or when field activities were changed without a variance being obtained, or when established procedures were not followed, then the changes to the Work Plan are documented with nonconformance reports.

Seven variances to the Work Plan were generated and are provided in Appendix A. They document changes to the location of a monitoring well, the use of a photoionization detector for ambient air monitoring, well apron installation, and quality control (QC) sampling requirements.

2.3 Field Activities and Procedures

2.3.1 Geophysical Survey

All borehole locations were geophysically investigated and cleared before drilling began. Utility maps were obtained from base personnel. If utility maps were not available, base personnel were consulted. Where terrain allowed, a 20-foot radius around each borehole location was investigated, and a minimum 5-foot radius around each location was denoted as clear. Utilities identified at a location were marked on the surrounding ground surface using colored paints indicating various utility types. At locations where subsurface anomalies were encountered within the 5-foot radius, an alternate (clear) location was chosen within close proximity. A field map was developed for each location identifying utilities detected and designating the location as cleared or not cleared. The utilized clearance techniques are discussed below.

The vicinity of each proposed boring location was surveyed using the EM31-DL soil conductivity meter to detect the presence of undocumented metallic objects such as utility cables, drums, tanks, and metallic trash. The EM31-DL provided the maximum penetration depth of the instruments used for clearance. However, the EM31-DL could not resolve multiple lines in close proximity or nonconducting lines. The instruments discussed below were used to refine and confirm the results of EM31-DL surveying. The EM31-DL was properly zeroed before use at each site. In addition, readings of conductivity and in-phase field strength were measured at the beginning of each day and checked thereafter at 4-hour intervals at an established base station. Base station readings were recorded in the Field Activity Daily Log. Any objects identified were marked on the surrounding ground surface.

Each proposed boring location was surveyed using the RD-400 Line Tracer to accurately locate buried metallic objects such as metal water pipes, metal sewer pipes, metal gas and oil lines, etc. In addition to accurately locating conducting objects known from utility maps and EM31-DL surveys, the RD-400 was also useful in resolving multiple lines.

A hand-towed Geophysical Survey Systems Incorporated (GSSI) ground penetrating radar (GPR) system was utilized at each location to ensure that nonconducting underground utilities were not present at the proposed boring locations. The increased resolution of the GPR unit also provided confirmation when the results of other techniques were ambiguous. A 300 megahertz (MHz) antenna was used predominantly, with a 500 MHz antenna used for a portion of DPDO Storage Yard. The GPR was calibrated before use at the first location, at the beginning of each subsequent day, and as needed in response to changing site conditions. These calibrations were recorded in the Field Activity Daily Log. A 40-foot intersecting grid pattern, marked in 5-foot increments, was utilized with one line running north to south and one line running east to west. At the intersection of these two lines was the proposed boring location.

A total of 33 soil borings and 10 monitoring wells were cleared for installation at NAVSTA San Diego.

2.3.2 Soil Boring and Monitoring Well Soil Sampling

Forty-three soil borings were drilled, with 33 of these being abandoned after sampling and 10 being converted to wells. The boreholes were primarily drilled with a CME-61 drill rig using 8-inch outside diameter (OD) hollow-stem augers. Continuous 2-1/2- or 3-inch diameter, 5-

foot-long split-spoon samples were collected through the hollow-stem augers without extracting the auger flights. This procedure allowed the hole to remain open during sampling, thus providing accurate depth control. The soils were logged primarily from the split-spoon using the Unified Soil Classification (USC) System nomenclature.

The section from within the sample core that was to be analyzed for organics and inorganics was selected after examining the sample core for discoloration, odor, and presence of organic vapors using a photoionization detector. In addition, the interval from within the sample core that was to be analyzed for dioxins was selected after examining for evidence of burn material(s). This information was recorded on the "Visual Classification of Soils" form. Boring logs are presented in Appendix B.

The selected soil samples were placed into containers as quickly as possible and shipped to IT's approved laboratory for chemical analysis. Soil samples not retained for analysis were placed into 55-gallon drums as were all drill cuttings.

Upon completion, each soil borehole was abandoned by grouting with a cement/bentonite grout mixture as the augers were pulled from the hole. The grout mixture was prepared by mixing approximately 6.5 gallons of potable water with 4 pounds of bentonite powder and one sack of portland cement (94 pounds). The resulting grout mixture was then thoroughly mixed before placement. Boreholes that were converted to monitoring wells were over-drilled with a 10-inch OD hollow-stem auger before the installation of the wells.

Each soil boring was surveyed to within ± 0.1 foot vertical accuracy and ± 0.1 foot horizontal accuracy. A base map was then created showing their locations and other pertinent information.

2.3.3 Monitoring Well Installation

The monitoring wells were constructed of 4-inch-diameter flush joint, threaded, Schedule 40 polyvinyl chloride (PVC) casing (Figure 2-1). Well screens were constructed of Schedule 40 PVC with 0.010-inch screen openings. One foot of filter sand was added through the augers to form a filter sand base, then the well casing and screen were installed through the augers. Filter sand was then added through the augers at 1-foot increments. After each increment, the augers were then raised several inches to allow the sand to fill the borehole.

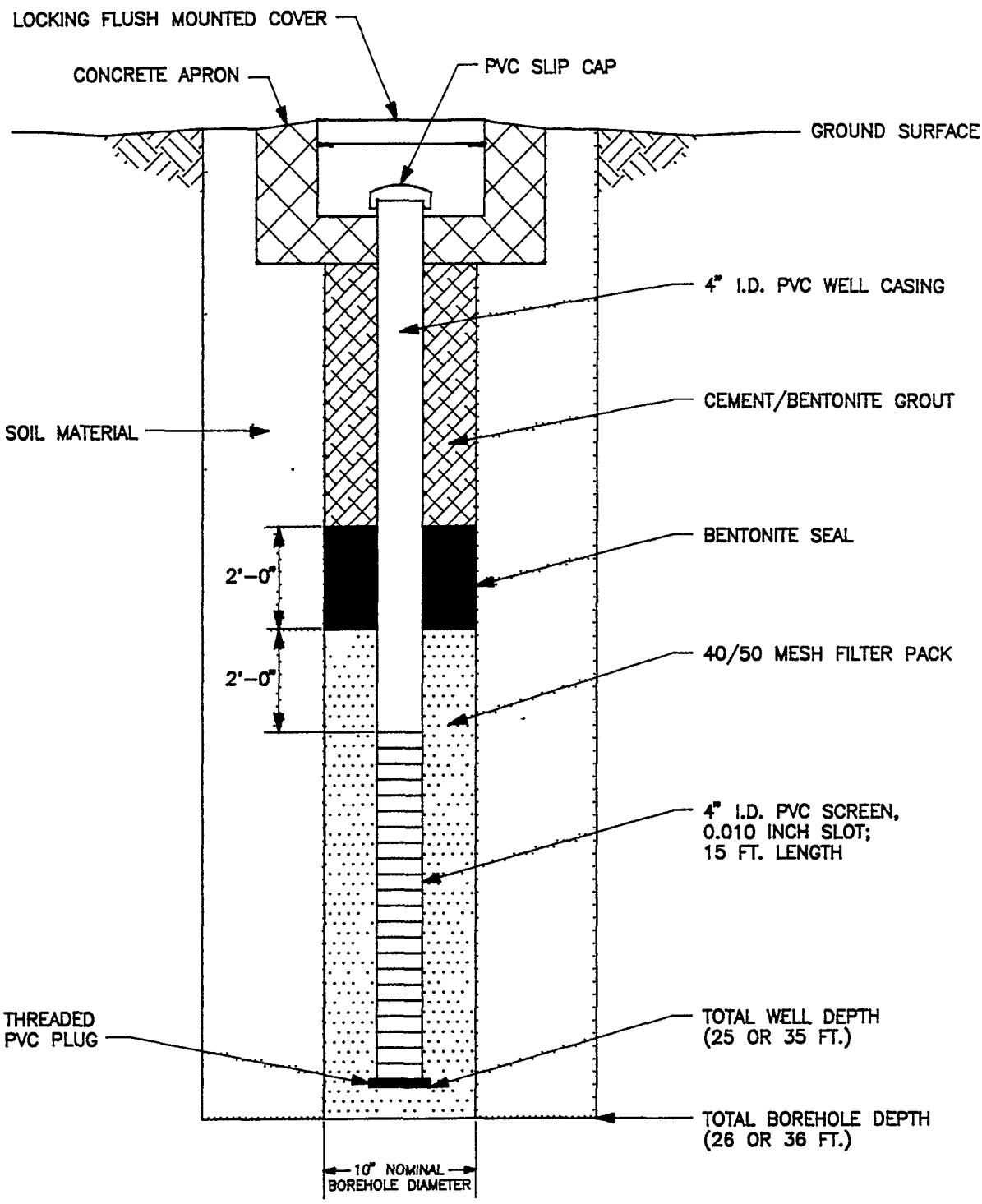

(NOT TO SCALE)

FIGURE 2-1

MONITORING WELL
CONSTRUCTION DIAGRAM

NAVAL STATION
SAN DIEGO, CALIFORNIA

INTERNATIONAL TECHNOLOGY CORPORATION

STARTING DATE: 2-3-92	DATE LAST REV.:	DRAFT. CHCK. BY: G. PACHECO	INITIATOR: G. QUARLES	DWG. NO.: 409767-A-013
DRAWN BY: BILL SMITH	DRAWN BY:	ENGR CHCK BY:	PROJ. MGR: M STURDEVANT	PROJ NO.: 409767

40976713

This process was continued until the filterpack was approximately 2 feet above the top of the screen. The filter sand consisted of washed, well-rounded silica sand that was at least 95 percent quartz and had a uniformity coefficient of 2.5 or less. The grain size of the filter pack was slightly larger than the well screen size (0.010 inches). After the filter pack was placed, the well was gently surged to ensure uniform filter pack placement. Two feet of granular bentonite was placed on top of the filter pack and firmly tamped into place. Where necessary, potable water was added to the bentonite to ensure hydration. Two hours after bentonite placement, a cement/bentonite grout mixture was placed with a tremie pipe to within 1 foot of the ground surface. The cement/bentonite grout mixture consisted of approximately 4 pounds of bentonite powder to one sack of portland cement (94 pounds) mixed thoroughly with approximately 6.5 gallons of potable water.

After the placement of the cement grout mixture, a flush-mounted lock box was then installed around each well (Figure 2-1). In addition to the lock boxes, concrete aprons were installed around each well to divert storm water from the well. For wells installed where the ground surface was concrete or asphalt, the aprons consisted of a 9-inch-radius, 6-inch-thick concrete pad. For wells installed where the ground surface was soil or gravel, the aprons were 3 feet in radius. Concrete was poured inside the lock box to approximately 1 inch below the bottom of the PVC well cap. A surveyors pin was flush mounted on the well apron as a reference point for elevations.

Each new monitoring well was surveyed to within ±0.005-foot vertical accuracy on the inside PVC casing, ±0.01-foot vertical accuracy on the protective casing and surrounding ground surface, and ±0.1-foot horizontal accuracy at the center of the well. The elevations and coordinates for the soil borings and monitoring wells are provided in Appendix C. Upon completion, a base map was created indicating their location and other pertinent information.

2.3.4 Monitoring Well Development and Groundwater Sampling

Well development was performed on all 10 new monitoring wells within 24 hours of installation and also on all existing monitoring wells. The development was accomplished by gently surging and bailing with a stainless steel bailer. While monitoring pH, temperature, and conductivity, each well was bailed until the purgewater appeared clear and free of particulates or until a maximum development time of 2 hours had elapsed. Development water removed from the wells was stored in 55-gallon drums.

After the wells were developed, they were purged for sampling. Purging was achieved by using a stainless steel bailer to remove groundwater until the pH and conductivity values stabilized. Wells with a sufficient recharge rate were purged of a minimum of five well volumes. Wells with a slow recharge rate, and which quickly bailed dry, were purged of a minimum of three well volumes per DOE/HWP-69. Groundwater samples were collected within 3 hours of purging where the recharge rate was sufficient. Wells with insufficient recharge to sample within 3 hours of the purge were sampled within 24 hours of the purge. The groundwater samples were collected with a bottom-filling PVC bailer and poured directly from the bailer into the sample containers. The sampling equipment including the filtering system for the metal samples was decontaminated before each groundwater sample. A new nylon cord was used for each well and then discarded after use.

2.3.5 Monitoring Well Abandonment

One well at Mole Pier was abandoned (NS2-MW07). The other well at Mole Pier (NS2-MW06) and the well at the Salvage Yard (NS3-MW01), which were to have been abandoned during this SI, had previously been destroyed during other (unrelated) construction work at NAVSTA San Diego. The NS2-MW07 well at Mole Pier was abandoned by over-reaming the casing with hollow-stem augers and then removing the entire well. A cement/bentonite mixture (as discussed in Section 2.3.2) was poured into the borehole until it was flush with the ground surface. To ensure that the cement/bentonite mixture had not bridged, the volume of grout placed into the borehole was measured and compared to the actual borehole volume.

2.3.6 Sediment Sampling

Three sediment samples were collected from the upper 8 inches of the ground surface in the drainage ditch that parallels the western edge of the DPDO Storage Yard. The northernmost sample (NS4-SS1) was collected first and represents background conditions. A stainless steel hand-driven bucket auger with replaceable stainless steel sample tubes was used to collect the samples. The stainless steel tubes were then capped with aluminum foil-lined Teflon™ caps, taped to secure the caps to the sample tubes, and sample identification was written directly on the sample tube. The samples were then placed on ice and shipped to the laboratory for analysis. For each sampling event, the sampling equipment was decontaminated and wrapped in plastic until utilized. Each sediment sampling point was located by land survey to $\pm$0.1-foot vertical accuracy and $\pm$0.1-foot horizontal accuracy.

2.3.7 Hydrogeologic Data Collection

Two rounds of water level measurements were collected from the 10 new wells and from 15 existing wells at NAVSTA San Diego. The two rounds of measurements were taken on the same day: one round in the morning and the second in the afternoon. A data logger was used to monitor water level elevations in one monitoring well and in Paleta Creek continuously for a 24-hour period before beginning the two rounds of measurements. This monitoring continued during the day that water level measurements were taken and for a 24-hour period after all measurements were completed.

The water level measurements were accomplished using water level indicators. Two teams of two people each were assigned specific wells to measure in a sequence. Both teams simultaneously began their round of measurements. The successive round of measurements was taken in the same sequence.

In addition to the water level measurements, aquifer tests (or slug tests) were performed on the ten new monitoring wells and eight of the existing monitoring wells. The slug test was performed by using a premanufactured PVC slug to cause a rapid decrease in the water level within the tested well. The well was monitored with a 0 to 5 pounds per square inch (psi) pressure transducer capable of recording water level changes five times per second. Each well was monitored for 2 hours before, during, and 2 hours after the slug test. The results are discussed in Section 3.2.

2.4 Disposal of Wastes from Field Activities

The soil, disposable health and safety (H&S) gear, and water generated during the drilling, sampling, and decontamination was placed into reconditioned, 55-gallon drums. Purge and development water from each well was placed into drums separate from the drill cuttings. Water used for the decontamination of equipment was also placed in drums separate from the drill cuttings and groundwater. The disposable H&S equipment was placed into drums containing the drill cuttings and groundwater.

The drums were labeled to indicate matrix content, date, and borehole/well origin. The drums were then assembled on the northwest section of the Fire Fighter Training Facility. Waste manifests for their disposal will be prepared, and the appropriate signatures will be obtained from NAVSTA San Diego personnel.

2.5 Quality Assurance/Quality Control Procedures

The project quality assurance/quality control (QA/QC) program for both the sample collection and off-site laboratory analysis for samples from NAVSTA San Diego were those described in the Hazardous Waste Remedial Actions Program (HAZWRAP) guidance document HWP/65-R1 for Level C and D. These procedures and criteria were also discussed in detail in the project-specific QAPP (IT, 1990).

Sample Collection

The QA/QC program for the collection of samples was as follows:

- Approximately one in ten samples was collected for duplicate analysis.
- Each cooler containing samples for volatile analysis was shipped daily with trip blanks to the laboratory. All trip blanks were analyzed only for volatile organic compounds (VOC).
- Equipment rinsate samples were collected daily from each set of decontaminated sampling equipment. Approximately 50 percent of these were analyzed for the parameters under investigation during that 24-hour period for a particular set of sampling equipment. The remaining equipment rinsate samples were archived at the analytical laboratory in the event that additional analyses of the samples were judged necessary due to suspected cross contamination.
- Field blank samples were collected from the on-site source of deionized water used for decontamination of sampling equipment. One field blank was collected per sampling event defined as a continuous sampling period with no more than a 2-day interruption.
- After each use, sampling equipment was decontaminated. Sampling equipment was steam cleaned to remove gross contamination, washed with detergent, and rinsed.
- Each sample was assigned a unique sample number at the time of collection. This sample number was based on the sample location, depth, and matrix, as described in detail in the work plan. The sample number was securely attached to each individual sample container for that location. The sample number was documented on the sample collection log and subsequently used on all associated Request for Analysis and Chain-of-Custody Record forms.
- Sample integrity was maintained by sealing each sample individually with security tape. The custody and transfer of the sample is documented on the Chain-of-Custody Record form.

- Sample degradation or changes were inhibited by proper preservation in accordance with methods described in the project-specific QAPP.

- No referee duplicate was required by the project-specific sampling protocols.

Sample Analysis. All samples for the project were analyzed by the ITAS Cerritos or Knoxville laboratory. Before the project began, each laboratory satisfactorily completed all HAZWRAP performance requirements such as analysis of proficiency samples, laboratory audit/inspections, and writing of QA plans.

Each laboratory followed the QA procedures and programs as written in the project-specific QAPP and approved laboratory-specific QA plan.

Data Validation. In addition to the project's work plan and QAPP, and the laboratory's internal QA/QC program, 15 percent of all SI analytical data was validated in accordance with guidelines in the following documents:

- HAZWRAP "Requirements for Quality Control of Analytical Data" DOE/HWP-65/R1

- U.S. EPA, Hazardous Site Evaluation Division "Laboratory Data Validation Functional Guidelines for Evaluating Organics Analyses" February 1, 1988

- U.S. EPA, Hazardous Site Evaluation Division "Laboratory Data Validation Functional Guidelines for Evaluating Inorganics Analyses" July 1, 1988.

The criteria presented in these documents are objective and not sample dependent. Rather, they specify performance requirements under the control of the field contractor or laboratory.

In addition to providing an indicator of data quality, validation of meeting the standards referenced above provides data quality documentation that can be used to support litigation. To these ends, HAZWRAP guidance specifies that performance of data validation must be a systematic and independent verification of data quality and may not be performed by the analytical laboratory; data validation must be independent of, and in addition to, routine laboratory data review. ECHEM, Inc., performed the validation for analytical data collected for the NAVSTA San Diego SI. All data packages are retained in the project files by IT in Knoxville, Tennessee. All validated data is provided in Appendix D.

The validation includes adding data qualifiers to alert the data users of conditions in the laboratory setting that may have affected the sample data. This includes conditions such as laboratory method blank contamination and instrument calibration inconsistencies. These conditions are not new to chemical analytical laboratories, but as a result of the validation process, the data users may feel ensured that the data are valid and accurate to the highest degree possible as indicated by the unique qualifiers. Following are definitions of the data qualifiers used by the laboratories and in the validation process:

- U The material was analyzed for but was not detected above the level of the associated value. The associated value is either the sample quantitation limit or the sample detection limit.
- J The associated value is an estimated quantity.
- R The data are unusable. (Note: Analyte may or may not be present).
- UJ The material was analyzed for, but was not detected. The associated value is an estimate and may be inaccurate or imprecise.
- B The concentration reported is greater than the instrument detection limit (IDL) but less than the contract required detection limit (CRDL).
- D Compounds identified in an analysis at a secondary dilution.
- Z Matrix interference, not a confirmed concentration.

Analytical Data Interpretation. To define the nature and extent of contamination at NAVSTA San Diego, analytical data were consulted and described site by site. A complete discussion of the analytical results is provided in Sections 3.3 and 3.4 of this report. Detected analytes in the aforementioned discussion included all "B" and "J" qualifiers associated with the samples. The significance of contaminant concentrations to health and the environment is addressed in the Preliminary Risk Assessment, Chapter 4.0.

All detected organic compounds in background samples were considered to be attributable to site contamination. All detected inorganic compounds in background samples were considered to be naturally occurring in area soils. Detected metals in groundwater and soils at concentrations in excess of their respective site baseline concentration ranges were considered elevated. Further discussion of background sample results is provided in Section 3.3.

2.6 Health and Safety Procedures

All field work performed during the SI was conducted in accordance with the associated H&S Plan. Field personnel received a project orientation training session before beginning field activities. The training conducted by the field supervisor consisted of a review of project H&S requirements. Daily tailgate safety meetings were held and recorded by the field supervisor. All field records are retained in project files by IT in Knoxville, Tennessee.

3.0 Results of Field and Analytical Investigation

3.1 Site-Specific Geologic Characteristics

Data collected from soil boring and monitoring well installations indicate that NAVSTA San Diego is principally underlain by fill material. Most of the borings encountered recent fill as indicated by refuse, hydraulically placed fill, and bay deposits. It was not possible to make a distinction between placed fill and bay deposits because both deposits originate from the same source.

The boring logs indicate a very discontinuous deposition of clays and sands that typify an estuarine environment. Copies of the boring logs and well construction logs are included in Appendix B.

3.1.1 Site 2 - Mole Pier

The soil borings and monitoring wells installed at the Mole Pier extend to a maximum depth of 20 feet below grade. Figures 3-1 and 3-2 are general cross sections delineating sands, gravels, and clays across the site. The orientation of the two cross sections are illustrated on Figure 3-3. As shown in the figures, the stratigraphy across the site consists of mostly sands with stringers of clay that are discontinuous from one boring to another. Most of the sands found on site are fine-grained and relatively well-sorted.

From 0 to 10 feet below grade, silty sand and sands were encountered. The sands were yellowish brown to grayish brown, medium dense to loose, and contained stringers of more coarse sands and in some cases gravels. Interbedded in these sands are stringers of clay, olive gray to black, medium stiff, with inclusions of gravel and mica. Significant amounts of mica and shell fragments were associated with the sands and clay stringers found in the upper 10 feet of soil. The western end of the site contained a noticeable amount of concrete and other nonflammable rubble in the upper 10 feet of soil.

3.1.2 Site 3 - Salvage Yard

No soil borings were installed at the Salvage Yard during this investigation; however, 19 borings were installed in October 1987 during the verification step field investigation. Most borings were installed to 11 feet below grade. Four of the borings were converted to monitoring wells that were installed 15 to 26 feet below grade. All borings encountered silty, poorly graded sands with varying amounts of inorganic silts and silty clays. In borings that

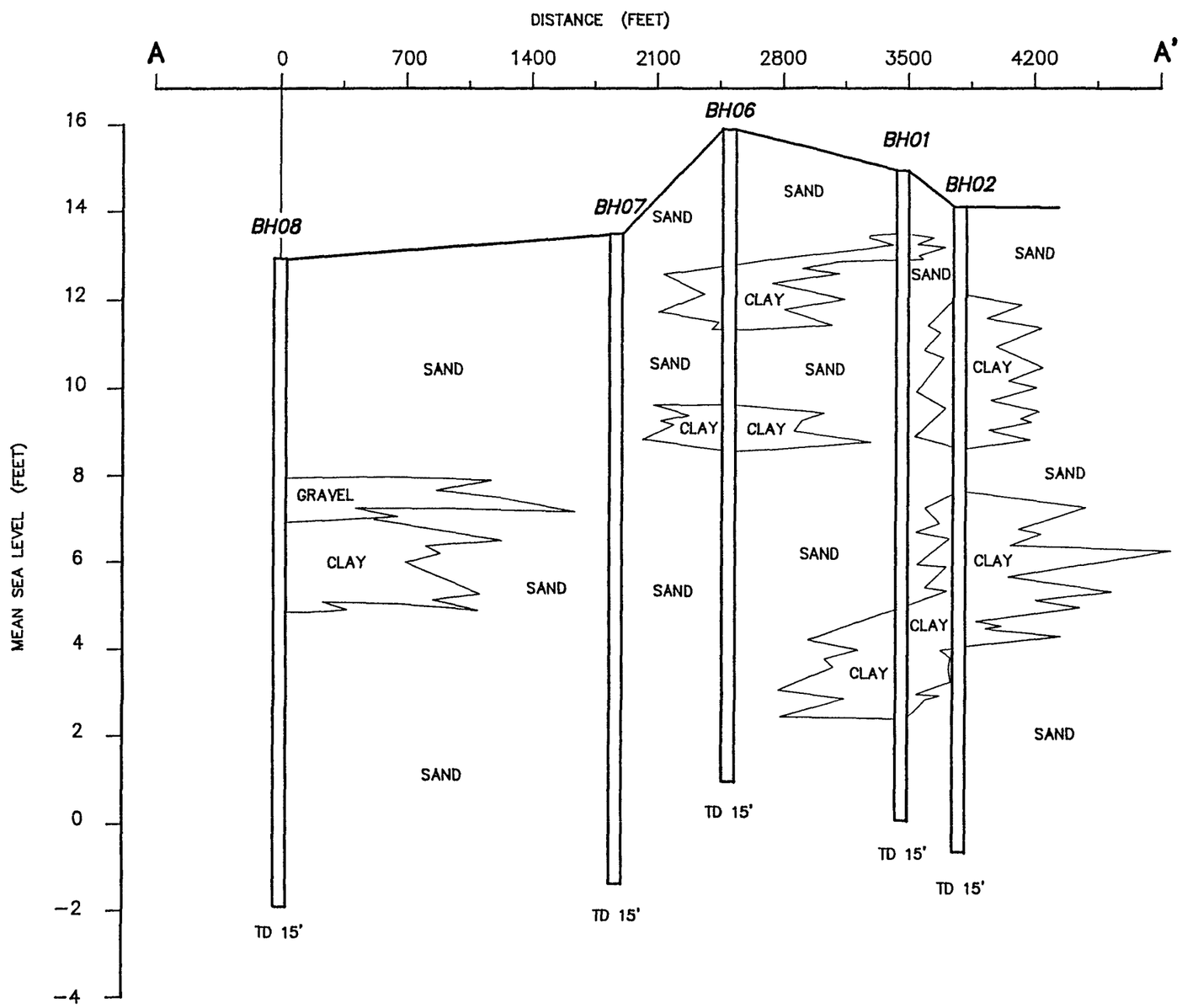

VERTICAL EXAGGERATION 233X

HORIZONTAL SCALE:

0 700 1400 FEET

VERTICAL SCALE:

0 3 6 FEET

FIGURE 3-1

EAST-WEST STRATIGRAPHIC CROSS-SECTION A – A'
SITE 2 – MOLE PIER

NAVAL STATION
SAN DIEGO, CALIFORNIA

INTERNATIONAL TECHNOLOGY CORPORATION

DRAWING NO.: 409767-B-C07
PROJ. NO.: 409767
INITIATOR: C. JOHNSON
PROJ. MGR.:M. STURDEVANT
DRAFT. CHCK. BY: J. HUBBARD
ENGR. CHCK BY: C. JOHNSON
DATE LAST REV.:
DRAWN BY:
STARTING DATE: 08/13/91
DRAWN BY: S. TOKAY

40976707 01/21/92 4:31pm SAT

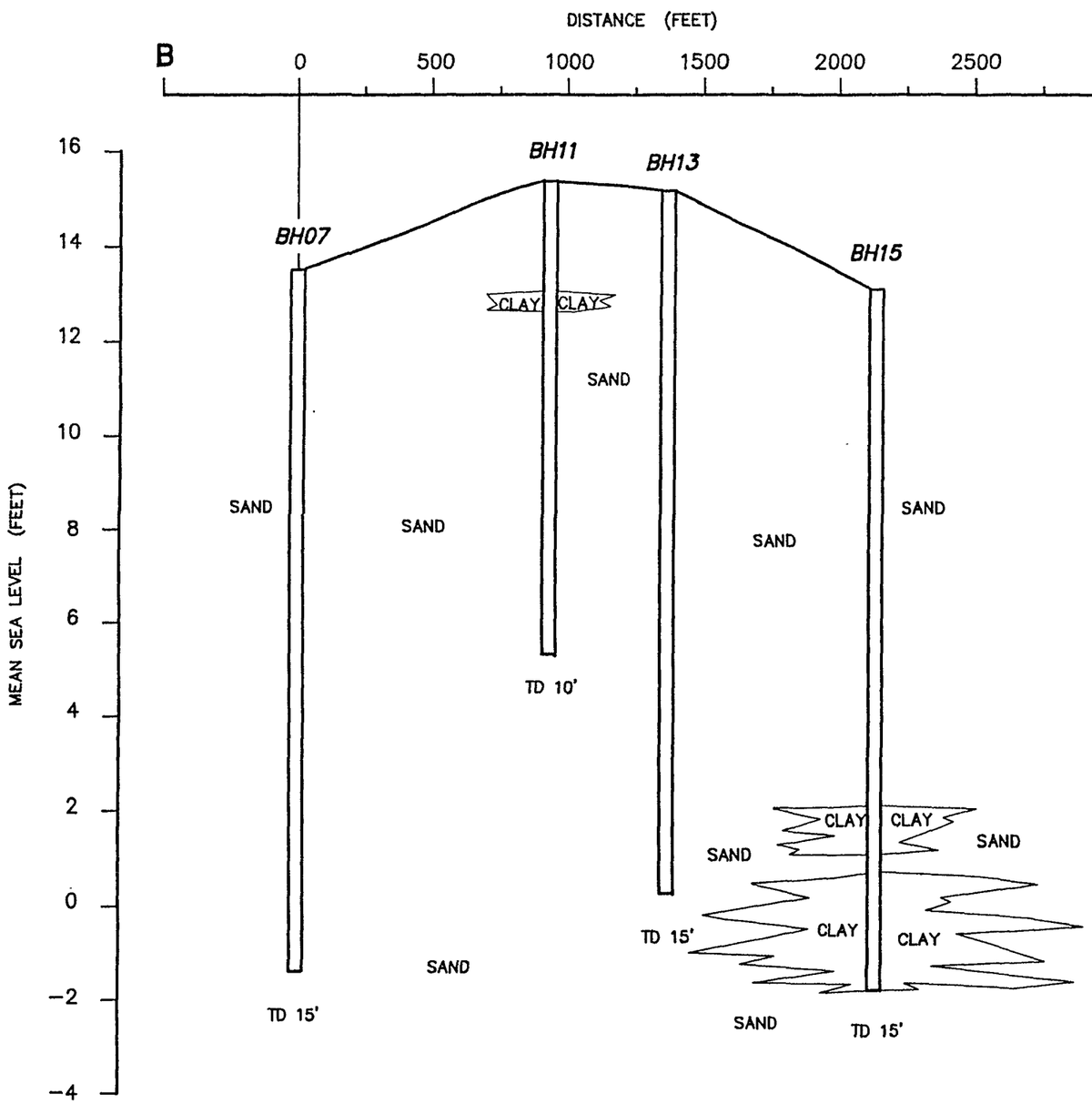

VERTICAL EXAGGERATION 166X

HORIZONTAL SCALE:

0 500 1000 FEET

VERTICAL SCALE:

0 3 6 FEET

FIGURE 3-2

NORTH-SOUTH STRATIGRAPHIC CROSS-SECTION B – B'
SITE 2 – MOLE PIER

NAVAL STATION
SAN DIEGO, CALIFORNIA

INTERNATIONAL TECHNOLOGY CORPORATION

DRAWING NO.: 409767-B-C08
PROJ. NO.: 409767
INITIATOR: C. JOHNSON
PROJ. MGR.:M. STURDEVANT
DRAFT. CHCK. BY: J. HUBBARD
ENGR. CHCK BY: C. JOHNSON
DATE LAST REV.:
DRAWN BY:
STARTING DATE: 08/13/91
DRAWN BY: S. TOKAY
40976706 01/21/92 4:13pm SAT

BRUNING 44-132 67120

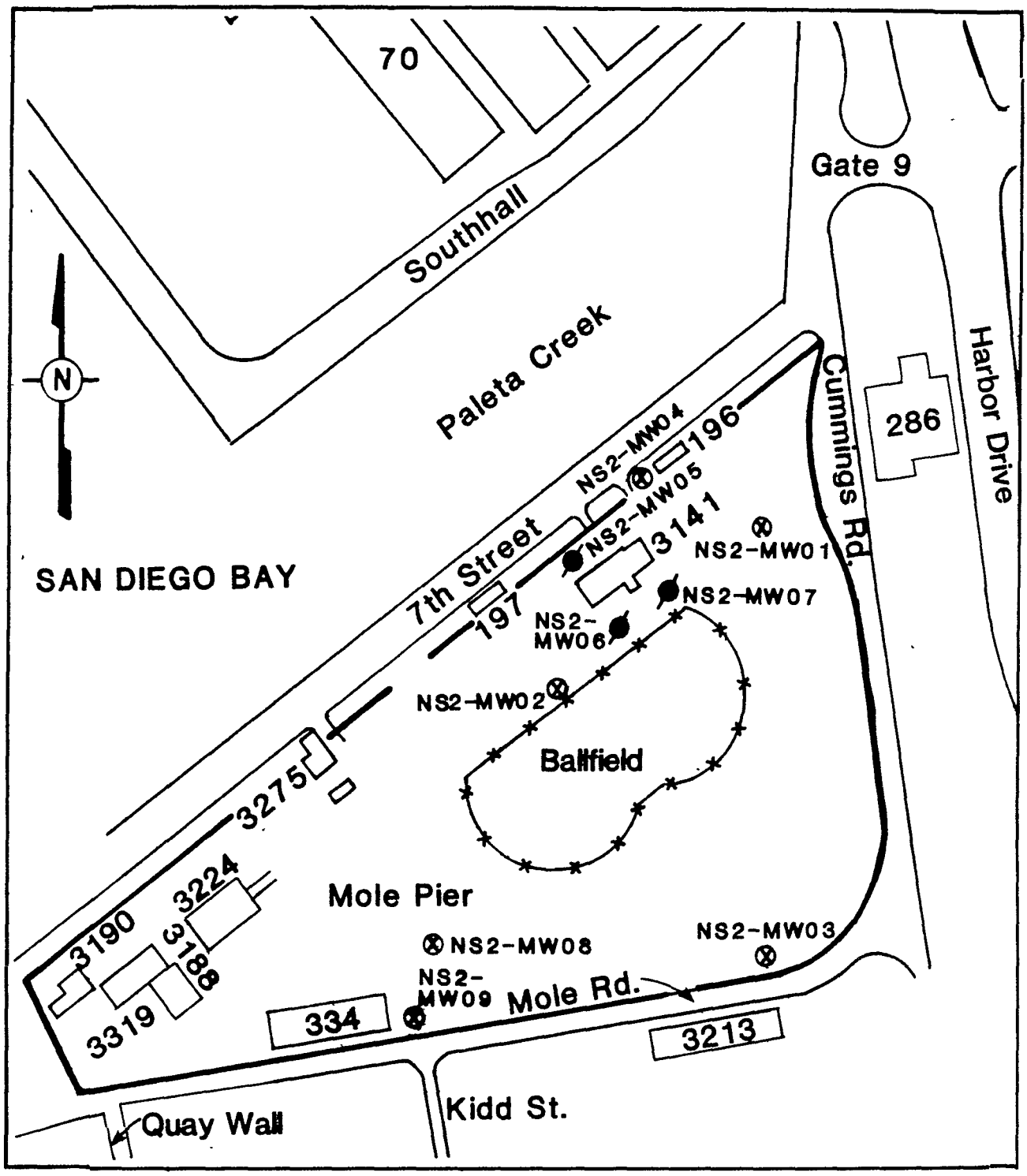

LEGEND

EXISTING MONITORING WELLS INSTALLED BY LEIGHTON & ASSOC.

EXISTING MONITORING WELLS INSTALLED BY WOODWARD-CLYDE

—x— FENCE

—— SITE BOUNDARY

SCALE

200 0 200 feet

FIGURE 1-3

SITE 2-MOLE PIER

NAVAL STAION
SAN DIEGO, CALIFORNIA

INTERNATIONAL TECHNOLOGY CORPORATION

STARTING DATE: 9/26/89 | DATE LAST REV.: | INITIATOR: M.Bolton | DRAWING NO.: 409635-A-C10

DRAWN BY: C.HINSHAW | DRAWN BY: | PROJ. ENGR. M.Sturdevant | PROJECT NO.: 409635

KD01464

extended to 15 feet or deeper, thick clay layers measuring 2 to 3 feet were common in the lower 5 feet of the boring. A 0.25-foot-thick clay horizon is evident at 10 to 13 feet below grade in all borings and is believed to separate an upper mixed unit from a lower more homogeneous moderately to well-sorted sand.

The geologic cross sections were constructed for the *Verification Step Report* (IT, 1988).

3.1.3 Site 4 - DPDO Storage Yard

The soil borings and monitoring wells installed at the DPDO Storage Yard extended to a maximum depth of 29 feet below grade. Figure 3-4 is a general cross section delineating sands, gravels, silts, and clays across the site. The orientation of the cross section is illustrated in Figure 3-5. As illustrated in Figure 3-4 the site is predominantly underlain by sands from ground surface to approximately 10 feet below ground surface.

The upper 10 feet is a silty sand, olive brown/red brown, loose to medium density, with mica, shell fragments, and gravel inclusions. Interbedded in these silty sands are clays. These interbeds are sandy/silty clay, olive brown to dark gray, moderately stiff, with shell and mica inclusions. Between 1 and 5 feet below mean sea level (msl) a change in stratigraphy was noted. The soils became more of a silty clay/clay, dark brown, stiff to very stiff with a noticeable absence of shell fragments and or refuse. Boring BH04 encountered a very organic blue-gray clay.

Slight amounts of refuse were encountered at the east and west ends of the site. There was a noticeable lack of shell fragments in the fill material as compared to the other sites.

3.1.4 Site 7 - Sewer Plant Site

The soil borings and monitoring wells installed at the Sewer Plant Site extended to a maximum depth of 31 feet below grade. Figure 3-6 is a general cross section delineating sands, gravels, silts, and clays across the site. The orientation of the cross section is illustrated in Figure 3-7. The cross section indicates the site to be mostly underlain with interbedded sands and clays with silts occurring at depth.

Silty/clayey sands that were encountered loose to medium dense, moderately sorted, red to grayish brown with stringers of 2 to 3 millimeters (mm) gravels and well-sorted sands. Interbedded with these silty sands were clays of high plasticity as well as silty clays. These

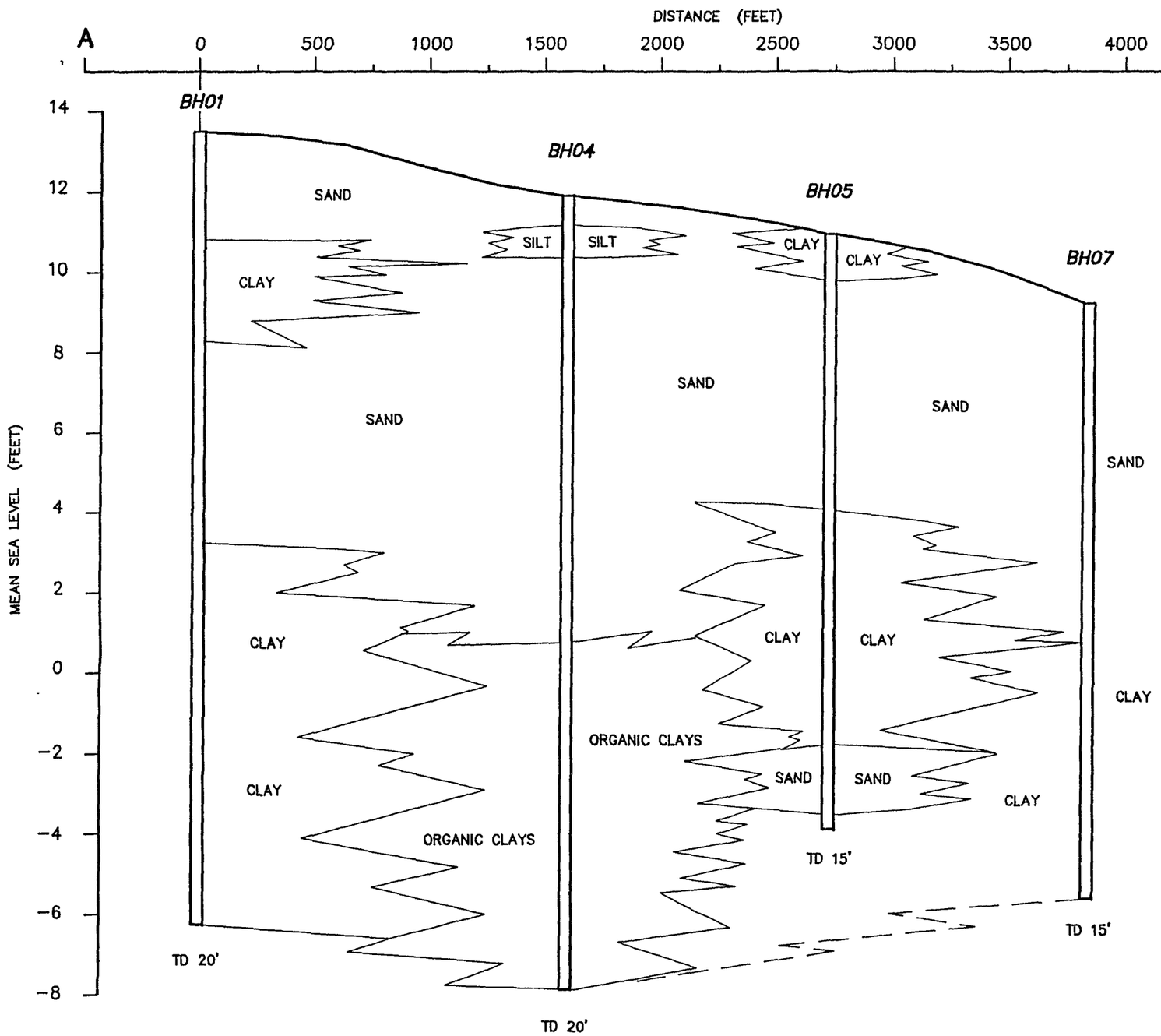

VERTICAL EXAGGERATION 166X

HORIZONTAL SCALE:

0 500 1000 FEET

VERTICAL SCALE:

0 3 6 FEET

FIGURE 3-4

STRATIGRAPHIC CROSS-SECTION A – A'
SITE 4 – DPDO STORAGE YARD

NAVAL STATION
SAN DIEGO, CALIFORNIA

INTERNATIONAL TECHNOLOGY CORPORATION

DRAWING NO.: 409767-B-C08	PROJ. NO.: 409767
INITIATOR: C. JOHNSON	PROJ. MGR.: M. STURDEVANT
DRAFT. CHCK. BY: J. HUBBARD	ENGR. CHCK BY: C. JOHNSON
DATE LAST REV.:	DRAWN BY:
STARTING DATE: 08/13/91	DRAWN BY: S. TOKAY

40976708 01/22/92 8:31am SAT

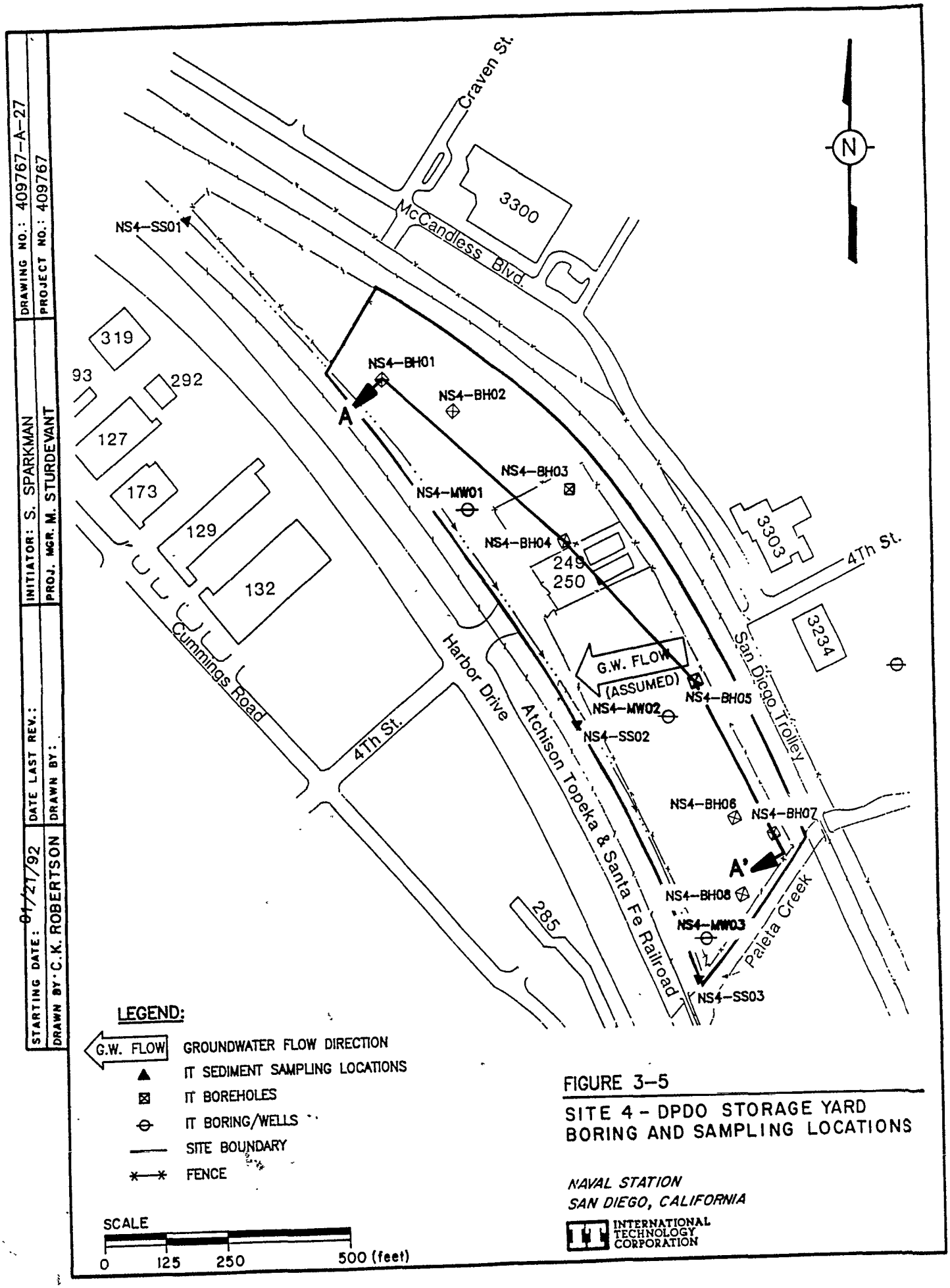

FIGURE 3-5

SITE 4 - DPDO STORAGE YARD
BORING AND SAMPLING LOCATIONS

NAVAL STATION
SAN DIEGO, CALIFORNIA

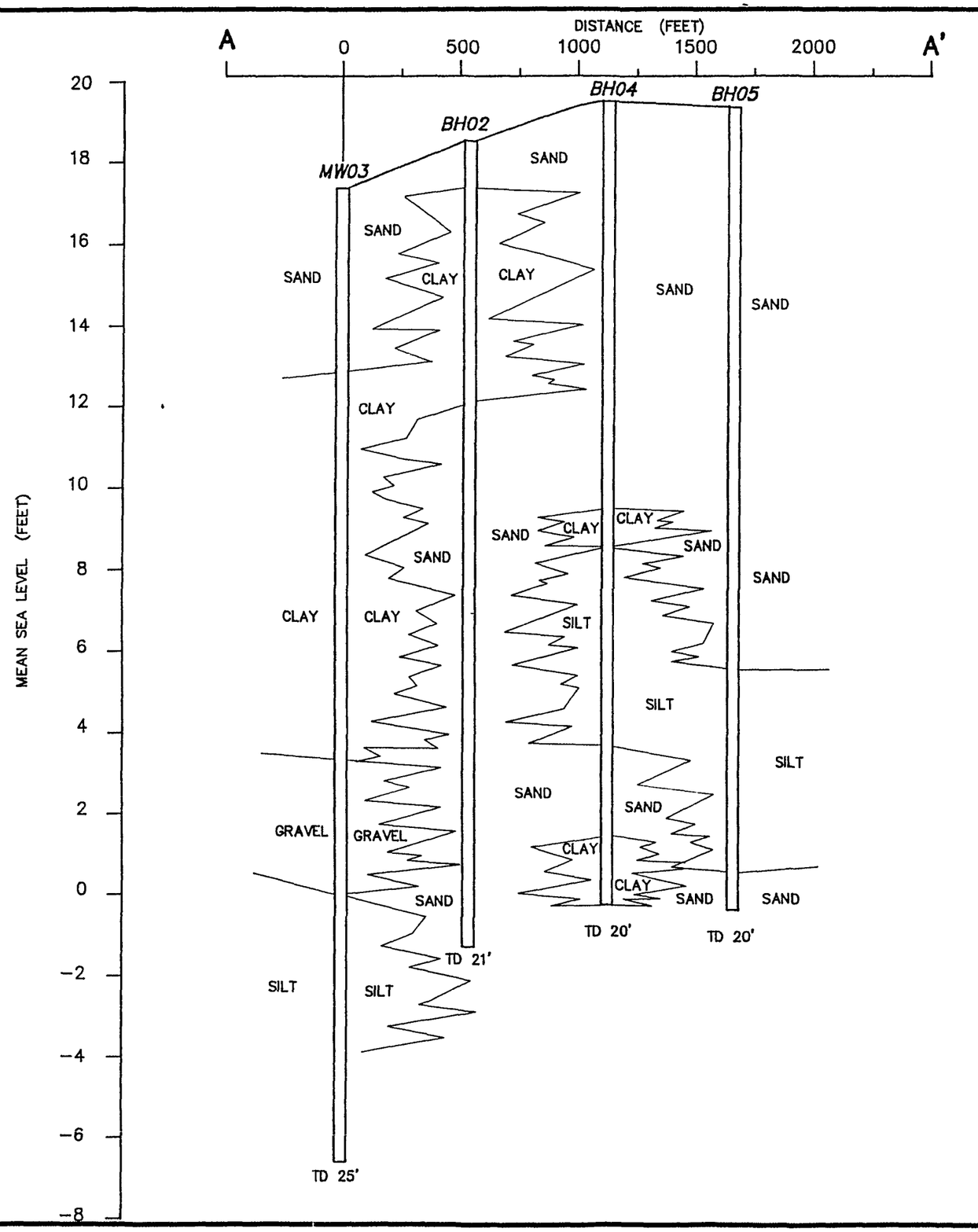

VERTICAL EXAGGERATION 166X

HORIZONTAL SCALE:

0 500 1000 FEET

VERTICAL SCALE:

0 3 6 FEET

FIGURE 3-6

STRATIGRAPHIC
CROSS-SECTION A - A'
SITE 7 - SEWER PLANT

NAVAL STATION
SAN DIEGO, CALIFORNIA

INTERNATIONAL TECHNOLOGY CORPORATION

DRAWING NO.: 409767-B-C09	PROJ. NO.: 409767
INITIATOR: C. JOHNSON	PROJ. MGR.:M. STURDEVANT
DRAFT. CHCK. BY: J. HUBBARD	ENGR. CHCK BY: C. JOHNSON
DATE LAST REV.:	DRAWN BY:
STARTING DATE: 08/13/91	DRAWN BY: S. TOKAY

40976709 01/22/92 10:18am SAT

clays were brown to black, soft to medium stiff, contained noticeable amounts of mica, and had a strong organic odor. Several of the borings encountered silts at approximately 12 to 18 feet below ground surface. These silts were stiff, dark gray to brown, with abundant amounts of mica.

A noted reduction in the content of shell remains in the soil relative to the Mole Pier. Rubble was encountered at soil borings BH01 through BH03 that lie in the west portion of the site.

3.1.5 Site 8 - Fire Fighter Training Facility

The soil borings and monitoring wells installed at the Fire Fighter Training Facility extended to a maximum depth of 15 feet below grade. Some existing wells installed during past investigations extend to 25 feet below grade. Figure 3-8 is a general cross section delineating sands, silts, and clays across the site. Geologic information from this SI as well as prior investigations are shown in Figure 3-8. The orientation of the cross section is illustrated in Figure 3-9. The site is underlain by a well-sorted silty sand, yellow to olive gray, loose to medium dense, with gravel and shell fragment inclusions. A few zones of silt interbedding as illustrated on the cross section are present from 10 to 25 feet below ground surface. The silt zones are loose to medium dense, dark olive brown, with dark striations. No shell remnants were noted, but clay stringers were noted throughout the sands. The clay tended to be olive gray to dark brown, stiff to medium stiff, with mica minerals throughout.

None of the boring logs at this site indicate the presence of refuse. Clays and silt horizons beneath this site are very discontinuous.

3.2 Hydrogeologic Characteristics

In areas where surface water bodies are known to exhibit tidal fluctuations, their effects on water level changes must be evaluated when conducting in situ aquifer tests. Continuous water level data were collected from February 19 to 22, 1991 using a data logger and pressure transducer at monitoring well NS3-MW04. Water levels were collected at 2-minute intervals, however, for data analysis 10-minute intervals were used. The results of the 72-hour monitoring are plotted in Figure 3-10. The water table fluctuations are caused by the rise and fall of tides (IT, 1988). Inspection of Figure 3-10 reveals that high-high water occurred at approximately 1:00 a.m. on February 20, and occurred approximately 1 hour later on each succeeding day. Each daily water level cycle exhibits the same type of pattern of water level

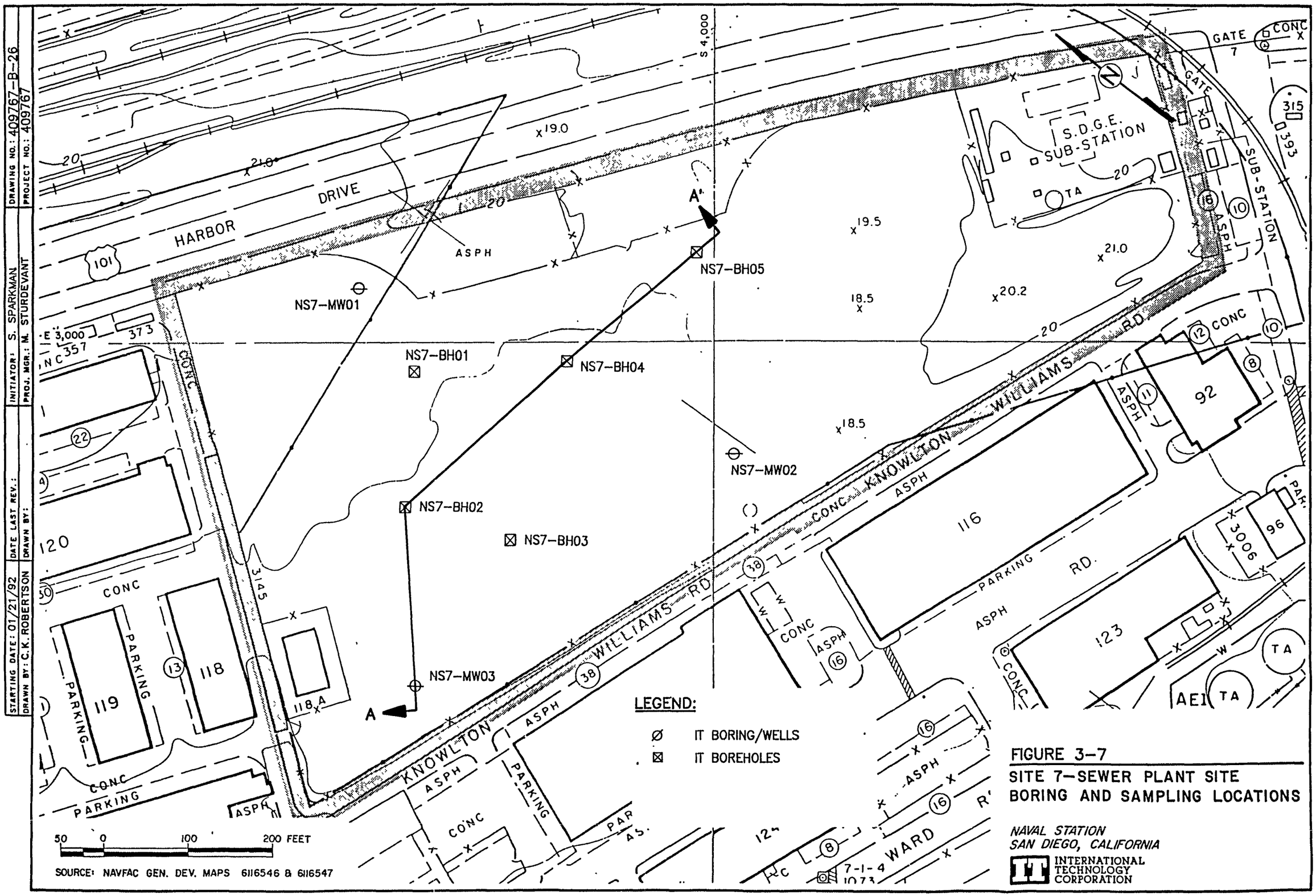

FIGURE 3-7
SITE 7-SEWER PLANT SITE
BORING AND SAMPLING LOCATIONS

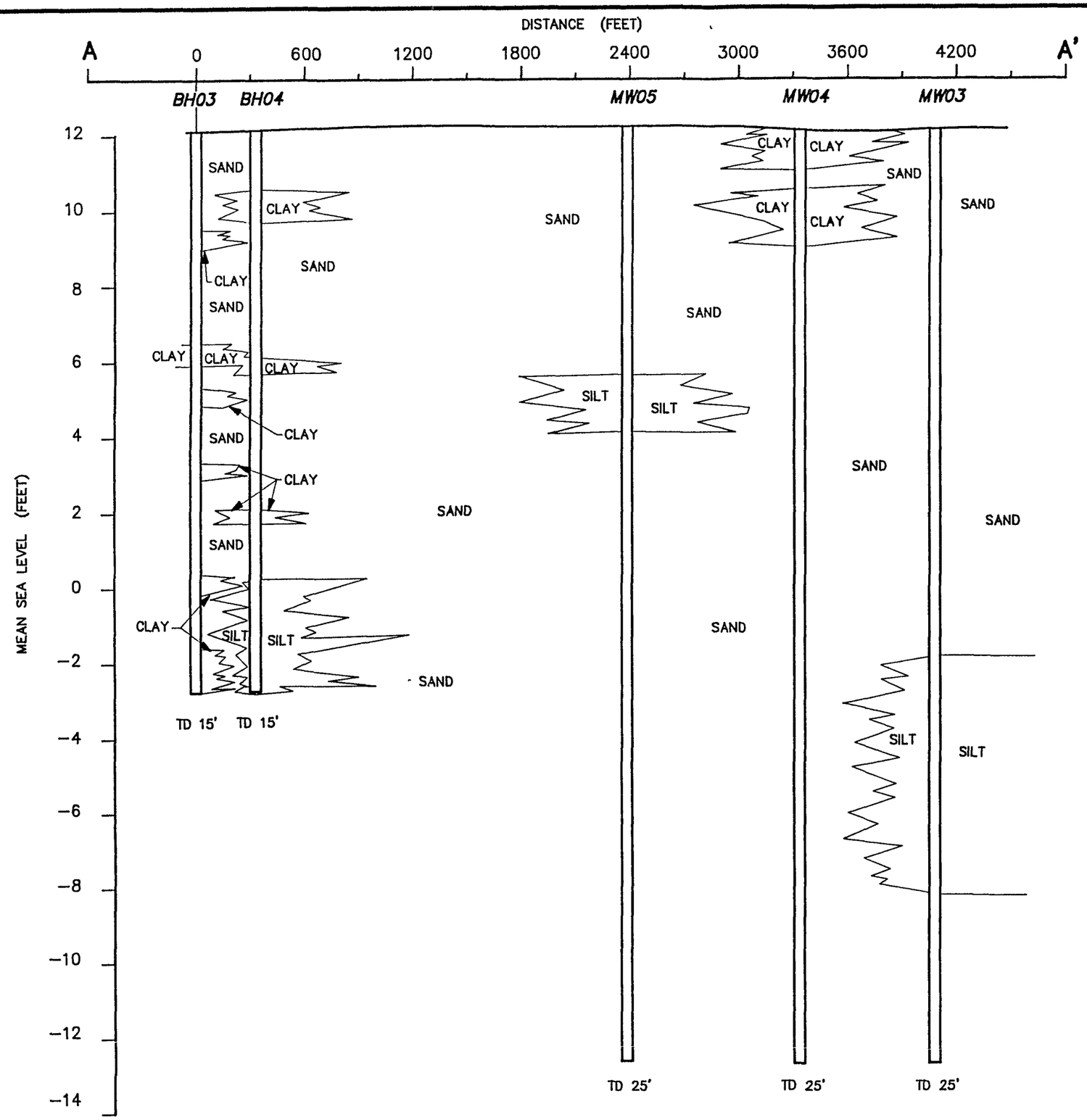

VERTICAL EXAGGERATION 100X

HORIZONTAL SCALE:

0 300 600 FEET

VERTICAL SCALE:

0 3 6 FEET

FIGURE 3-8

STRATIGRAPHIC
CROSS-SECTION A – A'
SITE 8 – FIRE FIGHTING TRAINING AREA

NAVAL STATION
SAN DIEGO, CALIFORNIA

INTERNATIONAL TECHNOLOGY CORPORATION

DRAWING NO.: 409767-B-C10	PROJ. NO.: 409767
INITIATOR: C. JOHNSON	PROJ. MGR.:M. STURDEVANT
DRAFT. CHCK. BY: J. HUBBARD	ENGR. CHCK BY: C. JOHNSON
DATE LAST REV.:	DRAWN BY:
STARTING DATE: 08/13/91	DRAWN BY: S. TOKAY

40976710 01/22/92 8:46am SAT

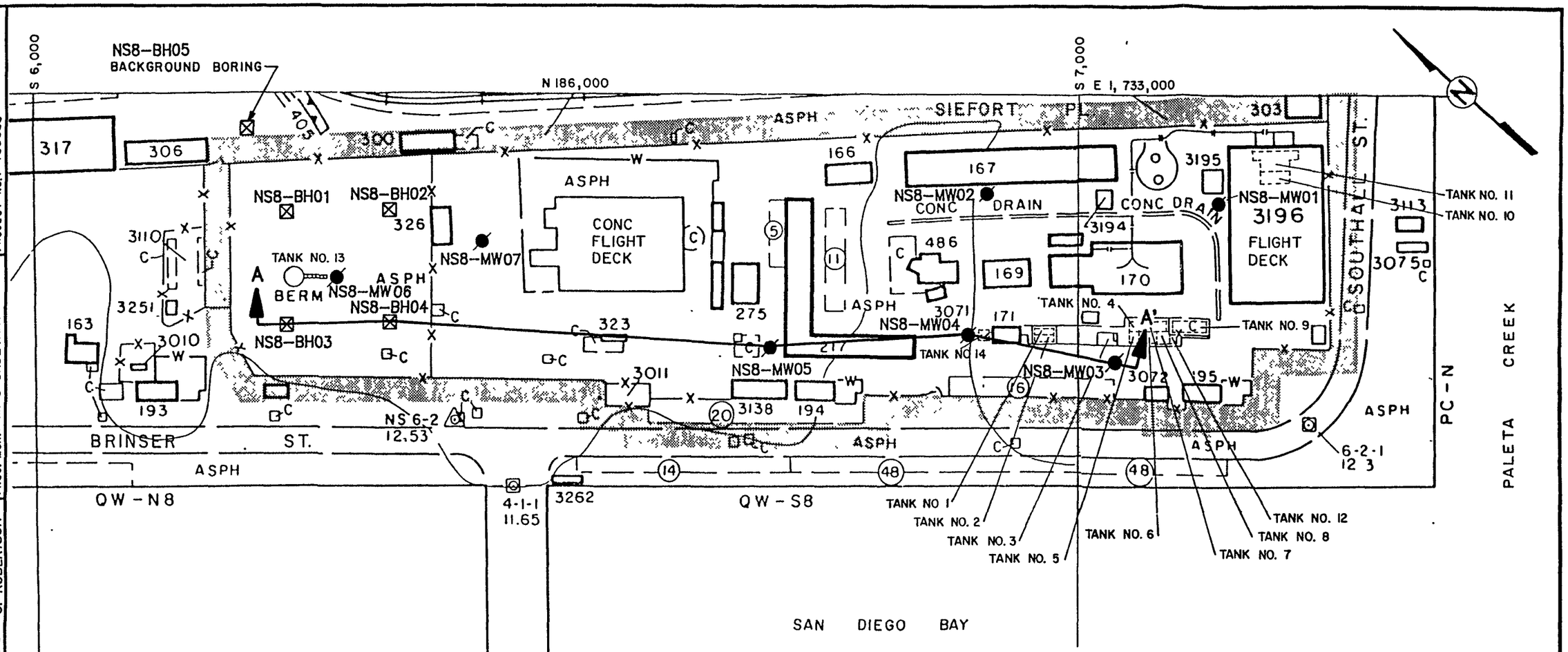

TANK SCHEDULE

TANK NO.	CAPACITY GAL.	REMARKS	MATERIAL	LOCATION
1	13750	STORM WATER CLARIFIER	CONCRETE	BURIED
2	13750	FINAL HOLDING TANK	CONCRETE	BURIED
3	10900	SLUDGE	CONCRETE	BURIED
4	3340	OIL SEPARATOR	CONCRETE	BURIED
5	5840	OIL SEPARATOR	CONCRETE	BURIED
6	3340	OIL SEPARATOR	CONCRETE	BURIED
7	11680	OIL RECLAIM TANK	CONCRETE	BURIED
8	2400	SUMP TANK	CONCRETE	BURIED
9	15000	WASTE WATER RECLAMATION	CONCRETE	BURIED
10	12600	FOAM SETTLING TANK	CONCRETE	BURIED
11	12600	FOAM SETTLING TANK	CONCRETE	BURIED
12	1800	FUEL (JP-5) TANK	STEEL	ABOVE GROUND
13	28000	FUEL (JP-5) TANK	STEEL	ABOVE GROUND
14	1500	DIESEL (ABANDONED)	CONCRETE	BURIED

FIGURE 3-9
SITE 8
FIRE FIGHTER TRAINING FACILITY
BORING AND SAMPLING LOCATIONS

NAVAL STATION
SAN DIEGO, CALIFORNIA

INTERNATIONAL TECHNOLOGY CORPORATION

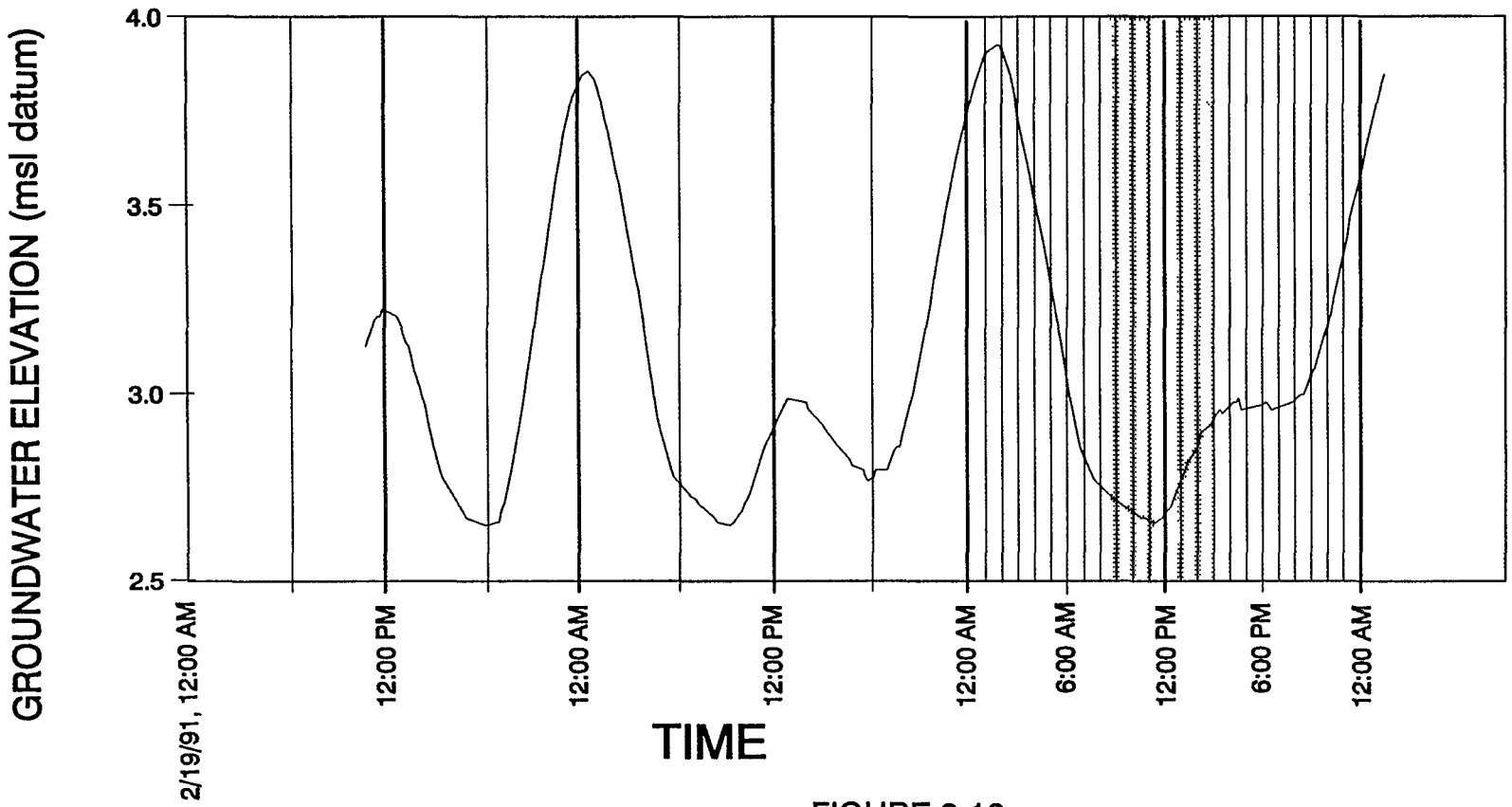

FIGURE 3-10

72 HOUR MONITORING OF TIDAL FLUCTUATION, NS4-MW03 FEBURARY 19 TO 22, 1991

NAVAL STATION
SAN DIEGO, CALIFORNIA

INTERNATIONAL TECHNOLOGY CORPORATION

72hrmon.drw/je/July 19, 1991

changes as expected for the tidal cycle in the harbor; however, the magnitude of the changes are much less, corroborating the findings of the 1988 investigation.

In addition to the long-term monitoring, each well to be tested was monitored for 2 hours before and after each aquifer test. Table 3.2-1 lists the wells monitored and qualitatively summarizes the magnitude of observed tidally induced water level changes. Groundwater elevations were found to fluctuate in at least 7 of the 18 monitoring wells that were tested. Measurements were not, however, made of the actual tidal changes in San Diego Bay; therefore, tidal efficiencies were not estimated as part of this investigation.

In situ horizontal hydraulic conductivity tests were conducted at 15 monitoring wells at four of the sites at the NAVSTA San Diego, from February 20 to March 4, 1991. Table 3.2-1 summarizes the dates and times that these tests were conducted. All wells tested were screened in the unconfined water table present in the fill at these sites (refer to Section 2.3.3). At each site, some of the wells did not appear to respond to the daily water level fluctuations (refer to Table 3.2-1) and may be isolated from the local groundwater flow regime or exhibit severe damping effects with respect to tidally induced water level changes.

Aquifer tests conducted as part of this investigation were not corrected for tidal effects. There were three reasons for not correcting the data:

- The tests were of very short duration, in most cases lasting less than 10 minutes for nearly full recovery.
- The changes in water levels due to the test were large in comparison to any possible tidal effect during that time.
- Many of the wells did not appear to exhibit response to the tidal fluctuations.

Rising head tests were conducted in all tested wells. The time and dates when these tests were conducted are shown in Table 3.2-1; the results of the tests are given on a site-by-site basis in Table 3.2-2 and are statistically summarized in Table 3.2-3. The test results were analyzed using the Bouwer and Rice (1976) method for unconfined saturated materials. Well construction details were available for all wells tested, and the saturated thickness of the aquifer materials was assumed to be 20 to 21 feet. In all but one case, the top of the well screen was always above the dynamic water level; therefore, two distinct curves were evident on the Time/Log Drawdown plots (refer to Appendix E). Under these conditions, the second

Table 3.2-1

Groundwater Elevations Measured at Time of In Situ Test

Monitoring Well Location	Top of Casing Elevation	Depth to Groundwater	Groundwater Elevation	Date and Time	Tidal Influence Observed[a]
NS2-MW02	14.21	11.14	3.07	3/04/91 - 8:35 AM	b
NS2-MW04	12.18	7.94	4.24	3/01/91 - 7:30 AM	b
NS2-MW05	13.76	9.27	4.49	3/01/91 - 9:35 AM	b
NS2-MW10	13.42	9.70	3.72	2/28/91 - 12:43 AM	c
NS2-MW11	12.30	7.27	5.03	2/27/91 - 9:06 AM	d
NS2-MW12	14.14	9.76	4.38	2/26/91 - 8:40 AM	c
NS4-MW01	12.87	10.72	2.15	2/25/91 - 12:06 AM	e
NS4-MW02	11.70	9.69	2.01	2/22/91 - 8:42 AM	e
NS4-MW03	9.72	7.00	2.72	2/22/91 - 10:50 AM	f
NS4-MW04	13.00	10.05	2.95	2/22/91 - 9:45 AM	e
NS7-MW01	21.08	17.17	3.81	2/26/91 - 12:50 AM	e
NS7-MW02	18.71	14.96	3.75	2/27/91 - 8:25 AM	e
NS7-MW03	17.51	12.94	4.57	2/29/91 - 7:15 AM	f
NS8-MW02	12.10	8.14	3.96	2/20/91 - 11:10 AM	c
NS8-MW03	11.94	8.98	2.96	3/04/91 - 9:05 AM	d
NS8-MW04	11.88	8.26	3.62	2/20/91 - 11:00 AM	c
NS8-MW05	12.15	8.26	3.89	2/19/91 - 12:40 AM	c
NS8-MW07	12.07	8.62	3.45	2/28/91 - 7:18 AM	c

[a]Tidal fluctuation data form pre- and post aquifer test water level monitoring.
[b]Tidal fluctuation greater than 1 foot.
[c]Tidal fluctuation greater than 0.05 foot.
[d]Tidal fluctuation greater than 0.5 foot.
[e]Tidal fluctuation is not evident from monitoring data.
[f]Tidal fluctuation greater than 0.1 foot.

Table 3.2-2

Hydraulic Conductivity Calculations
NAVSTA San Diego

Well Number	Hydraulic Conductivity (feet/min)	Hydraulic Conductivity (cm/sec)
NS2 Mole Pier		
MW02	3.06×10^{-3}	1.55×10^{-3}
MW04	6.74×10^{-4}	3.42×10^{-4}
MW05	1.01×10^{-2}	5.13×10^{-3}
MW10	7.14×10^{-3}	3.63×10^{-3}
MW11	4.04×10^{-3}	2.05×10^{-3}
MW12	2.61×10^{-3}	1.32×10^{-3}
NS4 DPDO Storage Yard		
MW01	5.92×10^{-4}	3.01×10^{-4}
MW02-		
Slug	4.46×10^{-3}	2.26×10^{-3}
Bail	3.86×10^{-3}	1.96×10^{-3}
MW03	5.29×10^{-3}	2.7×10^{-3}
MW04	1.25×10^{-3}	6.3×10^{-4}
NS7 Sewage Plant		
MW01	1.53×10^{-3}	7.79×10^{-4}
MW02	1.62×10^{-3}	8.21×10^{-4}
MW03	9.51×10^{-4}	4.83×10^{-4}
NS8 FFTA		
MW02	2.20×10^{-3}	1.12×10^{-3}
MW03	1.77×10^{-3}	5.95×10^{-4}
MW04	1.02×10^{-3}	5.20×10^{-4}
MW05	7.57×10^{-3}	7.99×10^{-4}
MW07	6.34×10^{-4}	3.22×10^{-4}

Table 3.2-3

Summary of Site Hydraulic Conductivities
NAVSTA San Diego

Site Location	Geometric Mean Hydraulic Conductivity (feet/minute)	Standard Deviation
NS2	3.41×10^{-3}	3.13×10^{-3}
NS4	2.32×10^{-3}[a]	1.84×10^{-3}
NS7	1.33×10^{-3}	3.63×10^{-4}
NS8	1.32×10^{-3}	5.54×10^{-4}
NS3[a]	4.88×10^{-3}	NA
Geometric mean: 2.12×10^{-3}		

[a]Geometric mean of values reported in ***Verification Step Report, Naval Station Salvage Yard***, Volume 2; IT, 1988.

linear portion of the curve represents the response of the aquifer materials (Bouwer and Rice, 1976), and it was this portion of the data that was analyzed. Hydraulic conductivities computed from tests for this investigation range from 5.92×10^{-4} (NS4-MW01) to 1.01×10^{-2} feet/minute (NS2-MW05) (Table 3.2-2). This range is somewhat larger than the range reported from the 1988 investigation (IT, 1988), but is consistent with an aquifer composed of silty sand materials (Freeze and Cherry, 1976; IT, 1988). The geometric mean for each site is given in Table 3.2-3, and ranges from 4.88×10^{-3} feet/min at the Salvage Yard, to 1.32×10^{-2} feet/minute at the Fire Fighter Training Facility.

Water level measurements were collected prior to low-low tide and low-high tide on February 21, 1991 for determination of groundwater flow direction. The groundwater elevations determined from the monitoring are summarized in Table 3.2-4. The shaded area in Figure 3-10 indicates when water level measurements listed in Table 3.2-4 were collected. Several of the monitoring wells that either did not respond or responded with less 0.1-foot of cyclic water level change were chosen as representatives for each site. The reason that some of the monitoring wells do not appear to respond to the tidal fluctuations cannot be established based on the data presently available. Contoured hydraulic head maps were constructed as part of this investigation and are shown in Figures 3-11 and 3-12. A prominent feature of both figures is an opponent groundwater depression at the DPDO Storage Yard. This feature was not evident in the verification step because of the limited data available during that investigation.

From the distribution of hydraulic heads (listed in Table 3.2-4) measured on February 21, 1991, several facts can be deduced:

- Groundwater flow is generally toward either San Diego Bay or Paleta Creek.
- Hydraulic gradients range from 6.1×10^{-4} away from the harbor at the Sewer Plant to 2.0×10^{-3} toward the harbor at Mole Pier.
- There appears to be a groundwater divide separating the Sewer Plant and Fire Fighter Training Facility from the DPDO Storage Yard. The apparent groundwater divide appears to center on the Salvage Yard and to persist during ebb tide. The hydraulic gradient from the Salvage Yard toward the DPDO Storage Yard is much greater than the gradients toward the bay, 3.1×10^{-3}.

The origin of the apparent groundwater divide is not evident from the available data. From the available data, it appears that groundwater will flow most rapidly from the area around the Salvage Yard toward Site 4 (DPDO Storage Area).

Table 3.2-4

Groundwater Elevations on February 21, 1991

(Page 1 of 2)

Monitoring Well Location	Top of Casing Elevation	Depth to* Groundwater	Groundwater Elevation	Time of Day
NS2-MW02	14.21	11.28	2.93	11:39 AM
NS2-MW03	13.53	9.44	4.09	10:44 AM
NS2-MW04	12.18	9.84	2.34	10:21 AM
NS2-MW05	13.76	11.00	2.76	10:37 AM
NS2-MW09	13.79	9.96	3.83	10:15 AM
NS2-MW10	13.42	9.81	3.61	10:28 AM
NS2-MW11	12.30	8.50	3.80	10:08 AM
NS2-MW12	14.14	9.85	4.29	10:03 AM
NS3-MW03	10.35	5.87	4.48	09:20 AM
NS3-MW04	12.42	8.62	3.80	09:29 AM
NS3-MW05	12.42	8.14	4.28	09:23 AM
NS4-MW01	12.87	10.68	2.19	08:46 AM
NS4-MW02	11.70	9.82	1.88	09:07 AM
NS4-MW03	9.72	7.00	2.72	09:08 AM
NS4-MW04	13.00	10.00	3.00	08:51 AM
NS7-MW01	21.08	17.22	3.86	09:33 AM
NS7-MW02	18.71	15.00	3.71	09:44 AM
NS7-MW03	17.51	14.00	3.51	09:49 AM
NS8-MW01	12.20	8.60	3.60	11:04 AM
NS8-MW03	11.94	8.98	2.96	11:13 AM
NS8-MW04	11.88	8.30	3.58	11:17 AM
NS8-MW05	12.15	8.35	3.80	11:09 AM
NS8-MW06	11.68	9.04	2.64	11:28 AM
NS8-MW07	12.07	8.64	3.43	11:17 AM

Table 3.2-4
(Page 2 of 2)

Monitoring Well Location	Top of Casing Elevation	Depth to[b] Groundwater	Groundwater Elevation	Time of Day
NS2-MW02	14.21	10.97	3.24	02:27 PM
NS2-MW03	13.53	9.45	4.08	02:18 PM
NS2-MW04	12.18	9.32	2.86	01:55 PM
NS2-MW05	13.76	10:58	3.18	02:00 PM
NS2-MW09	13.79	8.91	4.88	01:54 PM
NS2-MW10	13.42	9.80	3.62	02:05 PM
NS2-MW11	12.30	8.48	3.82	01:47 PM
NS2-MW12	14.14	9.85	4.29	01:48 PM
NS3-MW03	10.35	8.89	1.46	01:22 PM
NS3-MW04	12.42	8.60	3.82	01:25 PM
NS3-MW05	12.42	8.20	4.22	01:16 PM
NS4-MW01	12.87	10.64	2.23	12:50 PM
NS4-MW02	11.70	9.75	1.95	01:02 PM
NS4-MW03	9.72	6.92	2.80	01:07 PM
NS4-MW04	13.00	10.00	3.00	12:53 PM
NS7-MW01	21.08	17.18	3.90	01:31 PM
NS7-MW02	18.71	14.96	3.75	01:37 PM
NS7-MW03	17.51	14.02	3.49	01:36 PM
NS8-MW01	12.20	8.46	3.74	02:14 PM
NS8-MW02	12.10	8.12	3.98	02:08 PM
NS8-MW03	11.94	8.58	3.36	02:17 PM
NS8-MW04	11.88	8.22	3.66	02:20 PM
NS8-MW05	12.15	8.36	3.79	02:34 PM
NS8-MW06	11.68	9.03	2.65	02:57 PM
NS8-MW07	12.07	8.64	3.43	02:49 PM

*Water level measurements taken during low-low water.
[a]?????????
[b]?????????

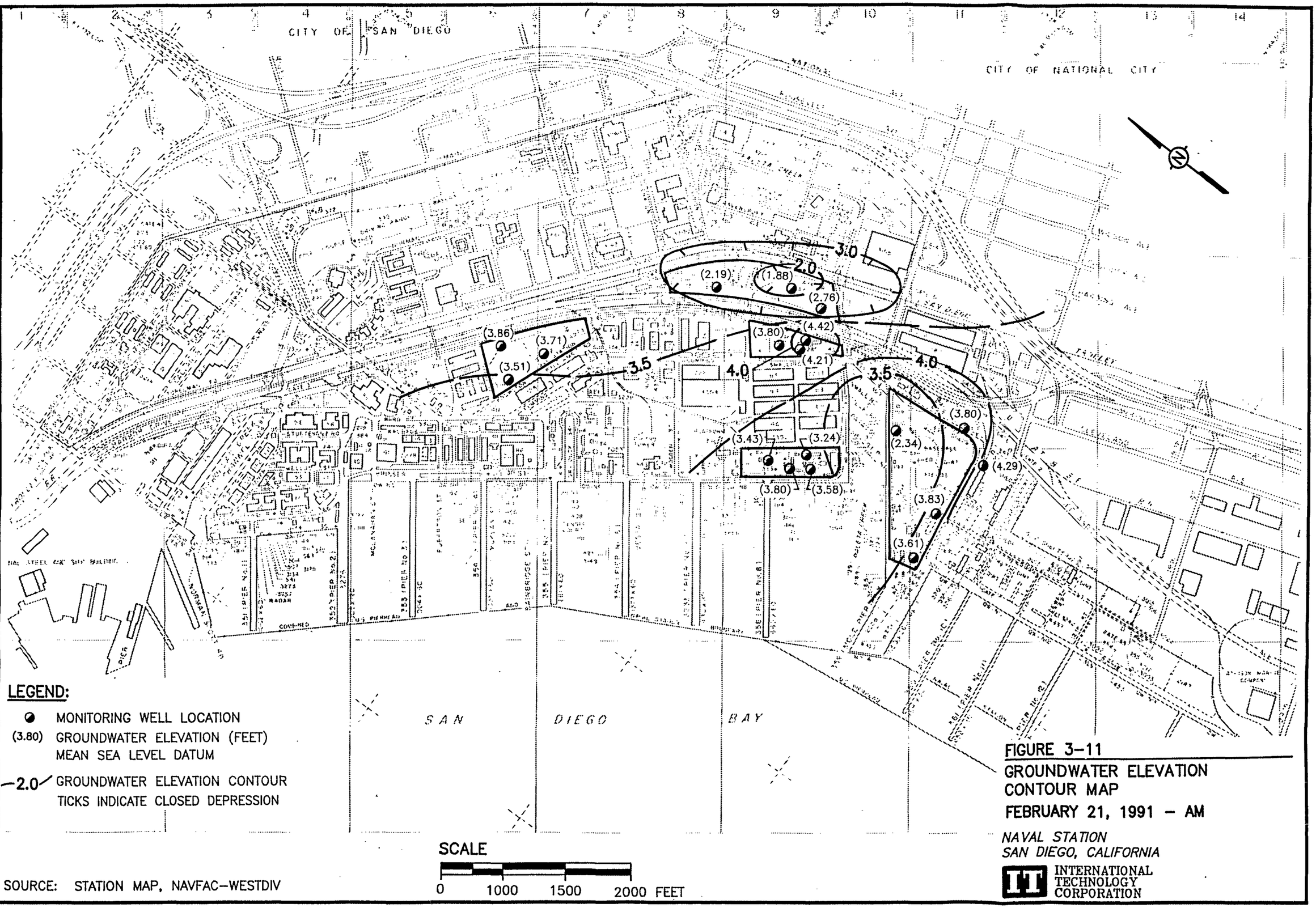
CITY OF SAN DIEGO
CITY OF NATIONAL CITY
3.0
2.0
(2.19)
(1.88)
(2.76)
(3.86)
(3.71)
(3.51)
3.5
4.0
(3.80)
(4.42)
(4.21)
4.0
3.5
(3.80)
(2.34)
(4.29)
(3.43)
(3.24)
(3.80)
(3.58)
(3.83)
(3.61)
SAN DIEGO BAY
LEGEND:
MONITORING WELL LOCATION
(3.80) GROUNDWATER ELEVATION (FEET) MEAN SEA LEVEL DATUM
2.0 GROUNDWATER ELEVATION CONTOUR TICKS INDICATE CLOSED DEPRESSION
SCALE
0 1000 1500 2000 FEET
SOURCE: STATION MAP, NAVFAC-WESTDIV
FIGURE 3-11
GROUNDWATER ELEVATION CONTOUR MAP
FEBRUARY 21, 1991 - AM
NAVAL STATION
SAN DIEGO, CALIFORNIA
INTERNATIONAL TECHNOLOGY CORPORATION
STARTING DATE: 1/24/92
DRAWN BY: C. ROBERTSON
DATE LAST REV.:
DRAWN BY:
DRAFT. CHCK. BY: D. HIGGS
ENGR. CHCK. BY: J. SHIREMAN
INITIATOR: J. SHIREMAN
PROJ. MGR.:M. STURDEVANT
DWG. NO.: 409767-B-12
PROJ. NO.: 409767

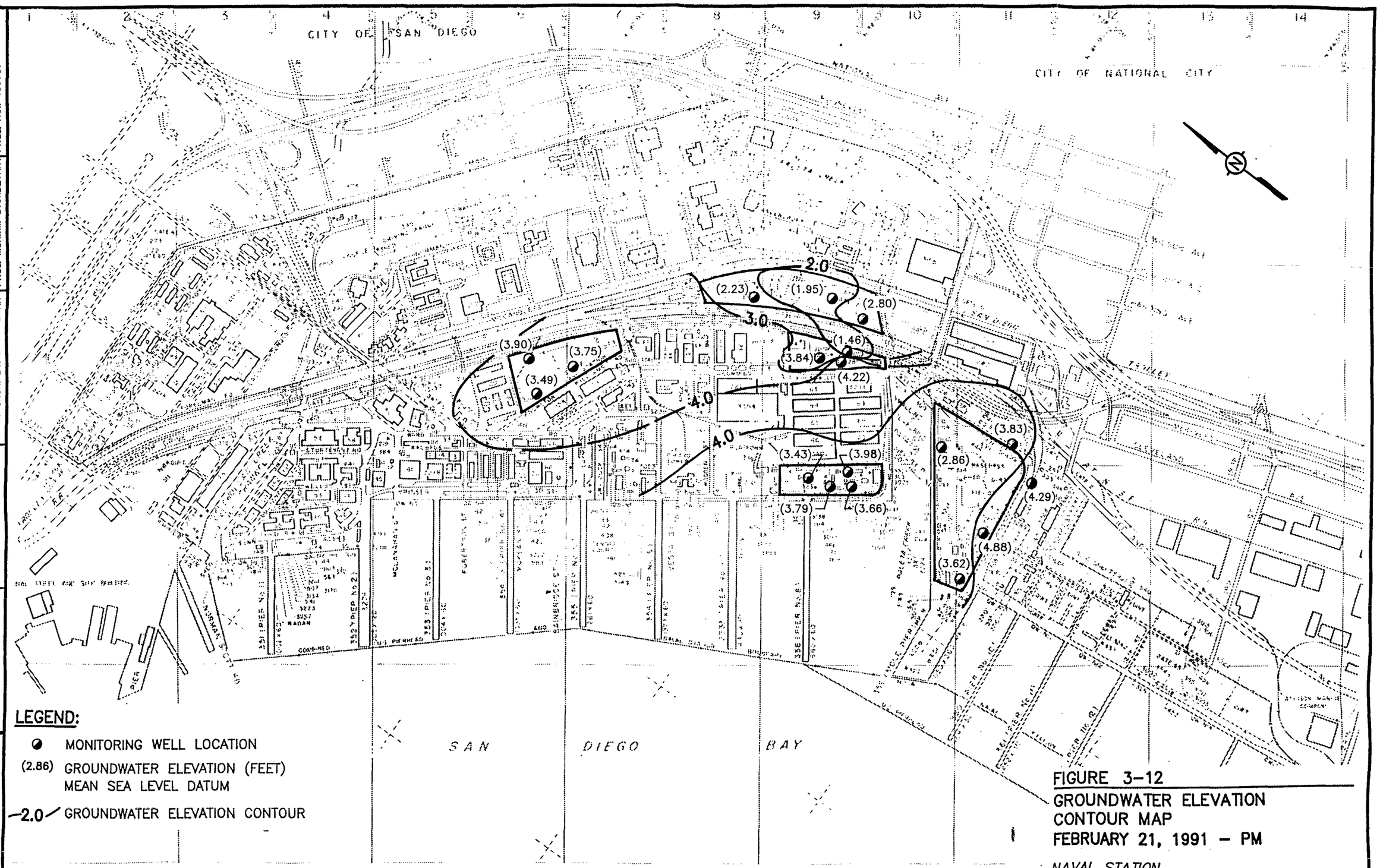

FIGURE 3-12
GROUNDWATER ELEVATION CONTOUR MAP
FEBRUARY 21, 1991 – PM

NAVAL STATION
SAN DIEGO, CALIFORNIA

INTERNATIONAL TECHNOLOGY CORPORATION

STARTING DATE: 1/24/92	DRAFT. CHCK. BY: D. HIGGS	INITIATOR: J. SHIREMAN	DWG. NO.: 409767-B-11
DRAWN BY: C. ROBERTSON	ENGR. CHCK. BY: J. SHIREMAN	PROJ. MGR.:M. STURDEVANT	PROJ. NO.: 409767
DRAWN BY:	DATE LAST REV.:		

3.2.1 Site 2 - Mole Pier

Six in situ hydraulic conductivity tests were conducted at Site 2, Mole Pier. The dates and time of day when each test was conducted is given in Table 3.2-1. Hydraulic conductivity ranged from 2.6×10^{-3} to 1.0×10^{-2} feet/minute, with a mean of 3.4×10^{-3} feet/minute. Water levels were monitored for 2 hours before and after each test to ascertain the tidal influences at the site. The relative magnitude of the tidal influences at Site 2 vary for the tests and are given in Table 3.2-3, ranging from less than 0.1 foot to more than 1 foot. Note that the tests were conducted over 7 days and that these tests spanned the maximum tidal water level changes.

Water levels were measured twice on February 21, 1991 to determine the direction of and changes in groundwater flow (Figures 3-11 and 3-12). Results of these measurements are presented in Table 3.2-4. From these results, the hydraulic gradient at Site 2 is estimated to be on the order of 0.002. Assuming an effective porosity of 0.38 (IT, 1988) and using the mean hydraulic conductivity, a groundwater flow velocity is approximately 10.1 feet/year.

3.2.2 Site 3 - Salvage Yard

There were no hydraulic conductivity tests conducted at Site 3 during the SI. Hydraulic conductivities were measured at Site 3 during the verification step investigation. Hydraulic conductivities were reported in the *Verification Step Report* (IT, 1988) and are only summarized here. The mean hydraulic conductivity for Site 3 is 4.88×10^{-3} feet/minute. Using the groundwater elevations given in Table 3.2-4 for high-tide on February 21, 1991, the hydraulic gradient at the Salvage Yard and the same effective porosity (0.38) as used in the *Verification Step Report* (IT, 1988), the groundwater flow velocity is 2.9 feet/year.

3.2.3 Site 4 - DPDO Storage Area

At Site 4, the DPDO Storage Area four in situ hydraulic conductivity tests were conducted. As shown in Table 3.2-1, three of the four tests were conducted on 1 day. Water levels were monitored for 2 hours before and after each test to determine the magnitude of tidal influences. The magnitude of the tidal influences at Site 4, during the test periods, can be seen to be minimal to nonexistent. However, the tests were conducted during low-low tide as shown in the 72-hour monitoring (Figure 3-10). Hydraulic conductivity ranged from 5.9×10^{-4} to 5.3×10^{-3} feet/minute, with a mean of 2.3×10^{-3} feet/minute.

From the groundwater levels determined (Table 3.2-4) on February 21, 1991, the hydraulic gradient at high-low tide for Site 4 can be estimated to be on the order of 0.003. Assuming an effective porosity of 0.38 (silty fine sand) and using the mean hydraulic conductivity for Site 4, the groundwater flow velocity is computed to be approximately 10.1 feet/year.

3.2.4 Site 7 - Sewer Plant Site

At Site 7, Sewer Plant, three in situ hydraulic conductivity tests were conducted. Hydraulic conductivity ranged from 9.5×10^{-4} to 1.6×10^{-4} feet/minute, with a mean of 1.3×10^{-3} feet/minute. As shown in Table 3.2-1, each of the tests were conducted on separate days. From the water level data given in Table 3.2-4, the hydraulic gradient for Site 7 is on the order of 1.0×10^{-4}. Using this value, assuming an effective porosity of 0.38, and the mean hydraulic conductivity, the groundwater flow velocity is expected to be 1.1 feet/year.

Water levels were monitored for 2 hours before and after each test to determine the magnitude of tidal influences. The magnitude of the tidal influences at Site 7 during the test periods can be seen to be minimal to nonexistent. A 72-hour water level monitoring program was completed at the DPDO 6 days before the first test, and from the data collected at Site 4 it appears that the tidal extremes are off set by approximately 1 hour each day (Figure 3-10). Therefore, it would appear that the tests were conducted at the time when the maximum tidally induced water level changes should be expected. From this inference and the observed absence of apparent tidal effects, it appears that Site 7 is isolated from direct interaction with the bay.

3.2.5 Site 8 - Fire Fighter Training Facility

At Site 8, the Fire Fighter Training Facility, a total of five in situ hydraulic conductivity tests were conducted. As shown in Table 3.2-1, three of tests were conducted on successive days. Water levels were monitored for 2 hours before and after each test to determine the magnitude of tidal influences. The magnitude of the tidal influences at Site 4, during the test periods can be seen to be substantial in only one case. Hydraulic conductivity ranged from 6.3×10^{-4} to 3.2×10^{-3} feet/minute, with a mean of 4.9×10^{-4} feet/minute.

Groundwater levels were determined (Table 3.2-4) twice on February 21, 1991. From these results, the hydraulic gradient at high tide for Site 8 can be estimated to be on the order of

Table 3.2-5

Summary of Site Hydraulic Parameters
NAVSTA San Diego

Site Location	K (feet/min)	Hydraulic Gradient	Groundwater Flow Velocity (feet/year)
NS2	3.41×10^{-3}	1.96×10^{-3}	9.6
NS4	2.32×10^{-3}	3.1×10^{-3}	10.1
NS7	1.33×10^{-3}	6.1×10^{-4}	1.1
NS8	1.32×10^{-3}	1.7×10^{-3}	3.2
NS3[a]	4.88×10^{-3}	.0031	21.3

[a]Geometric Mean of values reported in ***Verification Step Report, Naval Station Salvage Yard***, Volume 2; IT, 1988.

0.002. Assuming an effective porosity of 0.38 (silty fine sand) and using the mean hydraulic conductivity, groundwater flow velocity is approximately 3.2 feet/year.

3.3 Background Sample Results

This section presents analytical data obtained from background samples collected at NAVSTA San Diego in January and February 1991.

The chemical analytical data for NAVSTA San Diego have been summarized in tables throughout the text on a site-by-site basis. A complete listing of all analytical data available for each sample collected can be found in Appendix F. Validated data can be found in Appendix D.

Sample numbers begin with the NAVSTA (NS) site number followed by the monitoring well or borehole number at that site. The next sample identifier is the type and sequence number, groundwater (GW1,2...) or soil (SO1,2...). The last numerical values indicate the depth below ground surface where the sample was collected. Example: NS2-MW12-S02-10 is the second soil sample collected at Site 2, MW12 and at a depth of 10 feet. Sample numbers followed by an "FD" indicate that the sample is a duplicate - usually of the preceding sample depth (in the case of soils). Because soils are naturally heterogeneous, it is not possible to collect a true duplicate soil sample; therefore, a sample was collected immediately below the original and labeled as a "duplicate".

For this report, original and duplicate detected concentrations were evaluated for each compound with the highest value being included in the background summary tables for soil and groundwater (Tables 3.3-1 and 3.3-2), respectively. Background organic compound analysis results are presented in the corresponding sections.

Each sample from the borings were analyzed for:

Organics:	VOCs TPHs BNAs Pesticides/PCBs
Inorganics:	CAC metals Total cyanide.

Table 3.3-1

Summary of Detected Inorganic Compounds in Background Soil Samples
January - February 1991
Naval Station, San Diego, California

Compound	NS2-MW12			NS4-MW04			NS7-MW01			NS8-BH05		
	Range of Detects (mg/kg)	No. of Detects / Samples	Depth of High Conc. (ft.)	Range of Detects (mg/kg)	No. of Detects / Samples	Depth of High Conc. (ft.)	Range of Detects (mg/kg)	No. of Detects / Samples	Depth of High Conc. (ft.)	Range of Detects (mg/kg)	No. of Detects / Samples	Depth of High Conc. (ft.)
Antimony	7.7-7.9	2/3	15	ND	0/4	--	4.9	1/4	15	ND	0/2	--
Arsenic	1.6-3.5	3/3	5(FD)*	1.0-2.7	4/4	15	2.5-4.8	3/4	20	0.53-2.0	2/2	10
Barium	37.2-103	3/3	15	25.6-163	4/4	20	79.5-349	2/4	20	27.7	1/2	10
Beryllium	0.20-0.98	3/3	15	1.7-3.1	4/4	20	ND	0/4	--	0.29-1.1	2/2	10
Chromium	6.2-19.1	3/3	5(FD)	9.8-18.3	4/4	10	2.9-18.7	4/4	5	3.0-7.7	2/2	10
Cobalt	3.9-4.0	3/3	15	5.3-10.6	4/4	20	2.0-12.6	4/4	10	1.2-3.7	2/2	10
Copper	51.0	1/3	5(FD)	26.5	1/4	10	2.1	1/4	15(FD)	ND	0/2	--
Lead	97.3	1/3	5(FD)	3.6-16.4	2/4	5	ND	0/4	--	2.7	1/2	10
Mercury	0.21	1/3	5(FD)	ND	0/4	--	ND	0/4	--	ND	0/2	--
Molybdenum	ND	0/3	--	1.9	1/4	20	ND	0/4	--	ND	0/2	--
Nickel	6.1-6.6	2/3	15	4.2	1/4	10	4.8-9.0	3/4	10	ND	0/2	--
Vanadium	18.9-52.9	3/3	15	27.5-51.1	4/4	10	10.8-55.2	4/4	20	10.7-23.0	2/2	10
Zinc	132	1/3	5(FD)	40.6	1/4	10	ND	0/4	--	ND	0/2	--

*(FD) Duplicate of depth indicated.

KN/WP366.331/02-04-92/D2

Table 3.3-2

Summary of Detected Inorganic Compounds in Background Groundwater Samples, January - February, 1991 NAVSTA San Diego, California

Compound (ug/l)	NS2-MW12	NS4-MW04	NS7-MW01	NS8-BH05
Antimony	21.5			
Arsenic	2.3-3.8	2.0	19.4	NS[b]
Barium	26.7	98.0	11.9	
Beryllium	ND[a]	ND	1.3	
Cobalt	ND	5.3	ND	
Copper	22			
Lead	1.1	ND	1.0	
Molybdenum	18.4	60.6	13.2	
Silver	7.6	4.6	3.0	
Thallium	6.8	12.0	ND	
Vanadium	14.5-17.1	ND	113.0	
Zinc	215.0-226.0	ND	46.8	

[a]ND - Not detected
[b]NS - Not sampled for groundwater.

3.3.1 Site 2 - Mole Pier

Background monitoring well NS2-MW12 was completed off site, southeast of the center of Site 2 and directly upgradient of the assumed groundwater flow (Figure 3-3). Soil samples were taken from depths of 5, 10, and 15 feet with a duplicate soil sample taken from the 5-foot depth (S01-5-FD). A groundwater sample (GW1) and a duplicate groundwater sample (GW1-FD) were also collected.

Organic Analyses. Carbon disulfide was the only confirmed organic compound detected in any of the MW12 samples. It was reported at 5 ppb in groundwater sample NS2-MW12-GW1 only. Some TPH compounds were reported in the groundwater sample duplicate but only as unconfirmed concentration estimates due to matrix interference. Eleven semivolatile compounds and one pesticide compound were detected in MW12-S01-5FD.

Inorganic Analyses. Refer to Table 3.3-1 (Soils) and 3.3-2 (Groundwater) for a summary of the inorganic analytical results.

The five soil samples (including the 5-foot-depth duplicate) taken from background well NS2-MW12 were analyzed for the 17 CAC Metals. Of those CAC metals, only the compounds detected at least once are shown in Tables 3.3-1 and 3.3-2.

3.3.2 Site 4 - DPDO Storage Yard

Background monitoring well NS4-MW04 was completed off site, approximately 850 feet due east of on-site borehole location NS4-BH05 (Figure 3-5). NS4-MW04 is directly upgradient of the assumed groundwater flow. Soil samples were taken from depths of 5, 10, 15, and 20 feet. Groundwater samples taken at NS4-MW04 consisted of sample GW1 and a duplicate sample GW2-FD.

Organic Analyses. The pesticide dibutyl chlorendate was present in all groundwater and soil samples. Groundwater concentrations for the original sample and the duplicate were 76 and 71 µg/kg, respectively. Concentrations in the soil samples were as follows: 70 µg/kg (S01-5), 53 µg/kg (S02-10), 91 µg/kg (S03-15), and 90 µg/kg (S04-20). The only other organic compound detected was carbon disulfide at a concentration of 11 µg/kg in soil sample S02-10.

Inorganic Analyses. Refer to Tables 3.3-1 (Soils) and 3.3-2 (Groundwater) for a summary of the inorganic data.

3.3.3 Site 7 - Sewer Plant Site

Background monitoring well NS7-MW01 was completed on site near the northwest corner of Site 7 (Figure 3-7). Soil samples were taken from depths of 5, 10, and 15 feet. One groundwater sample was collected. Duplicates were not taken at this background location.

Organic Analyses. Organic compounds were not detected in any of the soil samples or the groundwater sample.

Inorganics. Refer to Table 3.3-1 (Soils) and 3.3-2 (Groundwater) for a summary of the inorganic data.

3.3.4 Site 8 - Fire Fighter Training Area

Background borehole NS8-BH05 was completed near the northwest corner of Site 8, immediately outside of the site boundary (Figure 3-9). The borehole is located upgradient of the assumed groundwater flow. Soil samples were taken from depths of 5 and 10 feet without duplicate samples. This borehole was not completed as a monitoring well and groundwater samples were not collected.

Organic Analyses. The organic compounds analyzed for were not detected in either of the two soil samples.

Inorganic Analyses. Refer to Table 3.3-1 for a summary of the inorganic compounds detected in soils.

3.4 Site-Specific Sample Results

3.4.1 Water Quality of Site Groundwater Samples

During groundwater sample collection, pH and conductivity of the groundwater was monitored. The conductivity of water is proportional to concentration of dissolved ionic specific species in the sample, which is an indicator of water quality. California has established guidelines for beneficial groundwater use including the total dissolved solids (TDS). Table 3.4-1 lists the stable conductivity of groundwater from each monitoring well sampled.

Table 3.4-1

Groundwater Conductivity Values

Monitoring Well Location	Conductivity (µmho/cm)
NS2-MW12	3,815
NS2-MW11	8,128
NS2-MW05	18,210
NS2-MW09	3,065
NS2-MW04	>20,000
NS2-MW12	2,285
NS2-MW02	9,720
NS2-MW09	3,240
NS2-MW04	>20,000
NS2-MW05	>20,000
NS2-MW10	>20,000
NS2-MW11	7,150
NS2-MW03	3,755
NS2-MW03	3,820
NS2-MW02	11,095
NS2-MW10	18,200
Average	10,780
NS3-MW04	14,500
NS3-MW03	>20,000
NS3-MW05	9,140
NS3-MW03	>20,000
NS3-MW04	>20,000
NS3-MW05	11,830
Average	15,912
NS4-MW02	>20,000
NS4-MW04	>20,000
NS4-MW02	>20,000
NS4-MW02	3,380

Table 3.4-1

(Page 2 of 2)

Monitoring Well Location	Conductivity (µmho/cm)
NS4-MW11	>20,000
NS4-MW03	>20,000
NS4-MW04	>20,000
NS4-MW01	>20,000
NS4-MW03	>20,000
Average	18,153
NS7-MW01	5,660
NS7-MW02	19,595
NS7-MW01	4,720
NS7-MW03	19,510
NS7-MW03	18,130
NS7-MW02	17,410
Average	14,171
NS8-MW04	4,535
NS8-MW05	14,880
NS8-MW03	4,550
NS8-MW03	4,465
NS8-MW04	5,738
NS8-MW06	>20,000
NS8-MW01	2,130
NS8-MW07	9,890
NS8-MW05	11,560
Average	8,639

The average groundwater conductivity values measured for each site are as follows:

- Site 2: ≥ 10,780 µsiemens/cm
- Site 3: ≥ 15,912 µsiemens/cm
- Site 4: ≥ 18,153 µsiemens/cm
- Site 7: = 14,171 µsiemens/cm
- Site 8: ≥ 8,639 µsiemens/cm.

The California policy for beneficial groundwater use states that the criteria for potable water is less than "3,000 mg/L TDS or 5,000 siemens/cm." None of the sites' groundwater meets this criteria; therefore, the groundwater at the NAVSTA will not be considered a potential drinking water source.

3.4.2 Site 2 - Mole Pier

3.4.2.1 Soils Data

Eighteen borings (fifteen soil borings, three monitoring well borings) were completed at Site 2. From the 18 borings a total of 41 soil samples including 4 field duplicates were collected for chemical analyses of TPH, VOCs, BNAs, pesticides, PCBs, and CAC metals. A select few soil samples were analyzed for dioxin and dibenzofurans. The number of QC samples collected are discussed in Section 2.5. The QC samples were analyzed for the same parameters as the original samples collected for the borings. Tables 3.4-2 through 3.4-5 contain a complete list of all soil samples collected from each boring along with a summary of the detectable compounds. MW12 is the background sample location outside of the Site 2 boundary. A complete list of all compounds analyzed is provided in Appendix F.

TPHs. TPHs were analyzed for the following fractions: diesel, hydraulic oil, motor oil, and Stoddard solvents. The diesel fraction was found to be the most prevalent and was detected in soil borings BH01, 02, 03, 04, 05, 06, 09, 11, 12, 15, and monitoring well borings MW10 at concentrations ranging from 10 to 16,000 mg/kg. Concentrations greater than 1,000 mg/kg of the diesel fraction were detected in samples from BH01 to BH04 and MW10. Hydraulic oil fraction was detected in soil borings BH09, 10, and 14 and monitoring well boring MW12 at concentrations ranging from 17 to 134 mg/kg. The motor oil fraction was detected in soil borings BH09, 10, 12, and 14 and monitoring well borings MW11 and MW12 at concentrations ranging from 14 to 360 mg/kg. The Stoddard solvent fraction was detected in two soil borings BH06 and BH08 at concentrations of 10 and 185 mg/kg, respectively.

TABLE 3.4-2

NAVSTA-SAN DIEGO
SITE 2 SOILS
ORGANIC COMPOUNDS

		SAMPLE NUMBER:	NS2-BH01-S01-5		NS2-BH01-S02-15		NS2-BH02-S01-10		NS2-BH02-S02-15		NS2-BH02-S03-15 FD	
		SAMPLING DATE:	02/04/91		02/04/91		02/04/91		02/04/91		02/04/91	
		BORING:	BH01		BH01		BH02		BH02		BH02	
		SITE:	NS2		NS2		NS2		NS2		NS2	
		DEPTH:	5		15		10		15		15 FD	
COMPOUND NAME	UNITS	TEST CODE	RESULT	QUALIFIER	RESULT	QUALIFIER	RESULT	QUALIFIER	RESULT	QUALIFIER	RESULT	QUALIFIER
1,2-DICHLOROBENZENE	UG/KG	BNA									870	J
2-METHYLNAPHTHALENE	UG/KG	BNA			3100		6600		18000		15000	
2-METHYLPHENOL	UG/KG	BNA										
4-METHYLPHENOL	UG/KG	BNA										
ACENAPHTHENE	UG/KG	BNA										
ANTHRACENE	UG/KG	BNA			1900		1700					
BENZO(A)ANTHRACENE	UG/KG	BNA										
BENZO(A)PYRENE	UG/KG	BNA										
BENZO(B)FLUORANTHENE	UG/KG	BNA										
BENZO(G,H,I)PERYLENE	UG/KG	BNA										
BENZO(K)FLUORANTHENE	UG/KG	BNA										
BENZOIC ACID	UG/KG	BNA										
BIS(2-ETHYLHEXYL)PHTHALATE	UG/KG	BNA										
CHRYSENE	UG/KG	BNA										
DI-N-BUTYLPHTHALATE	UG/KG	BNA										
DIBENZ(A,H)ANTHRACENE	UG/KG	BNA										
DIBENZOFURAN	UG/KG	BNA										
DIETHYLPHTHALATE	UG/KG	BNA										
FLUORANTHENE	UG/KG	BNA									1000	J
FLUORENE	UG/KG	BNA							2800	J	2400	J
INDENO(1,2,3-C,D)PYRENE	UG/KG	BNA										
NAPHTHALENE	UG/KG	BNA			1000	J	1900		6100	J	5700	J
PHENANTHRENE	UG/KG	BNA			1800		1600		4600	J	3600	J
PHENOL	UG/KG	BNA										
PYRENE	UG/KG	BNA									1000	J
OCDD	PG/G	DIOXINS										
TOTAL HpCDD	PG/G	DIOXINS										
TOTAL HxCDD	PG/G	DIOXINS										
TOTAL PeCDD	PG/G	DIOXINS										
OCDF	PG/G	FURANS										
TOTAL HpCDF	PG/G	FURANS										
TOTAL HxCDF	PG/G	FURANS										
TOTAL PeCDF	PG/G	FURANS										
TOTAL TCDF	PG/G	FURANS										
4,4'-DDD	UG/KG	PEST / PCB										
4,4'-DDT	UG/KG	PEST / PCB										
PCB-1260	UG/KG	PEST / PCB							408	J	340	J
DIESEL	MG/KG	TPHC			5260	D	5920	D	9940	D	7500	D
HYDRAULIC OIL	MG/KG	TPHC										
MOTOR OIL	MG/KG	TPHC										
STODDARD	MG/KG	TPHC										
1,1,1-TRICHLOROETHANE	UG/KG	VOA	2	J								
2-BUTANONE	UG/KG	VOA			310	J						
ACETONE	UG/KG	VOA	160	B			150					
CARBON DISULFIDE	UG/KG	VOA										
ETHYLBENZENE	UG/KG	VOA			330	J	14	J				
METHYLENE CHLORIDE	UG/KG	VOA										
TOLUENE	UG/KG	VOA	160		1000		220		4400	J	800	
TRICHLOROETHENE	UG/KG	VOA										

TABLE 3.4-2

NAVSTA-SAN DIEGO
SITE 2 SOILS
ORGANIC COMPOUNDS

		SAMPLE NUMBER:	NS2-BH01-S01-5		NS2-BH01-S02-15		NS2-BH02-S01-10		NS2-BH02-S02-15		NS2-BH02-S03-15 FD	
		SAMPLING DATE:	02/04/91		02/04/91		02/04/91		02/04/91		02/04/91	
		BORING:	BH01		BH01		BH02		BH02		BH02	
		SITE:	NS2		NS2		NS2		NS2		NS2	
		DEPTH:	5		15		10		15		15 FD	
COMPOUND NAME	UNITS	TEST CODE	RESULT	QUALIFIER	RESULT	QUALIFIER	RESULT	QUALIFIER	RESULT	QUALIFIER	RESULT	QUALIFIER
XYLENES (TOTAL)	UG/KG	VOA					23	J	690	J		

TABLE 3.4-2

NAVSTA-SAN DIEGO
SITE 2 SOILS
ORGANIC COMPOUNDS

		SAMPLE NUMBER:	NS2-BH02-S04-10-15		NS2-BH03-S01-10		NS2-BH03-S02-15		NS2-BH04-S01-5		NS2-BH04-S02-10	
		SAMPLING DATE:	02/04/91		02/04/91		02/04/91		02/05/91		02/05/91	
		BORING:	BH02		BH03		BH03		BH04		BH04	
		SITE:	NS2		NS2		NS2		NS2		NS2	
		DEPTH:	10-15		10		15		5		10	
COMPOUND NAME	UNITS	TEST CODE	RESULT	QUALIFIER	RESULT	QUALIFIER	RESULT	QUALIFIER	RESULT	QUALIFIER	RESULT	QUALIFIER
1,2-DICHLOROBENZENE	UG/KG	BNA										
2-METHYLNAPHTHALENE	UG/KG	BNA					31000				11000	J
2-METHYLPHENOL	UG/KG	BNA										
4-METHYLPHENOL	UG/KG	BNA										
ACENAPHTHENE	UG/KG	BNA							720	J		
ANTHRACENE	UG/KG	BNA							2400			
BENZO(A)ANTHRACENE	UG/KG	BNA							5600			
BENZO(A)PYRENE	UG/KG	BNA							3100			
BENZO(B)FLUORANTHENE	UG/KG	BNA							3100			
BENZO(G,H,I)PERYLENE	UG/KG	BNA							1500			
BENZO(K)FLUORANTHENE	UG/KG	BNA							4300			
BENZOIC ACID	UG/KG	BNA										
BIS(2-ETHYLHEXYL)PHTHALATE	UG/KG	BNA			550							
CHRYSENE	UG/KG	BNA							5600			
DI-N-BUTYLPHTHALATE	UG/KG	BNA										
DIBENZ(A,H)ANTHRACENE	UG/KG	BNA										
DIBENZOFURAN	UG/KG	BNA							460	J		
DIETHYLPHTHALATE	UG/KG	BNA										
FLUORANTHENE	UG/KG	BNA							15000			
FLUORENE	UG/KG	BNA					4900	J	970	J		
INDENO(1,2,3-C,D)PYRENE	UG/KG	BNA							1300			
NAPHTHALENE	UG/KG	BNA					6900	J			3400	J
PHENANTHRENE	UG/KG	BNA					6600	J	13000		3300	J
PHENOL	UG/KG	BNA										
PYRENE	UG/KG	BNA							11000		1500	J
OCDD	PG/G	DIOXINS	665.0									
TOTAL HpCDD	PG/G	DIOXINS	223.0									
TOTAL HxCDD	PG/G	DIOXINS	100.0									
TOTAL PeCDD	PG/G	DIOXINS										
OCDF	PG/G	FURANS	47.6									
TOTAL HpCDF	PG/G	FURANS	220.0									
TOTAL HxCDF	PG/G	FURANS	363.0	A								
TOTAL PeCDF	PG/G	FURANS	461.0	A								
TOTAL TCDF	PG/G	FURANS	468.0	A								
4,4'-DDD	UG/KG	PEST / PCB										
4,4'-DDT	UG/KG	PEST / PCB										
PCB-1260	UG/KG	PEST / PCB										
DIESEL	MG/KG	TPHC			1120		15000	D	270		4840	D
HYDRAULIC OIL	MG/KG	TPHC										
MOTOR OIL	MG/KG	TPHC										
STODDARD	MG/KG	TPHC										
1,1,1-TRICHLOROETHANE	UG/KG	VOA							6			
2-BUTANONE	UG/KG	VOA										
ACETONE	UG/KG	VOA										
CARBON DISULFIDE	UG/KG	VOA										
ETHYLBENZENE	UG/KG	VOA					650	J			450	J
METHYLENE CHLORIDE	UG/KG	VOA										
TOLUENE	UG/KG	VOA			7		190	J	67		1500	
TRICHLOROETHENE	UG/KG	VOA									170	J

TABLE 3.4-2

NAVSTA-SAN DIEGO
SITE 2 SOILS
ORGANIC COMPOUNDS

		SAMPLE NUMBER:	NS2-BH02-S04-10-15		NS2-BH03-S01-10		NS2-BH03-S02-15		NS2-BH04-S01-5		NS2-BH04-S02-10	
		SAMPLING DATE:	02/04/91		02/04/91		02/04/91		02/05/91		02/05/91	
		BORING:	BH02		BH03		BH03		BH04		BH04	
		SITE:	NS2		NS2		NS2		NS2		NS2	
		DEPTH:	10-15		10		15		5		10	
COMPOUND NAME	UNITS	TEST CODE	RESULT	QUALIFIER	RESULT	QUALIFIER	RESULT	QUALIFIER	RESULT	QUALIFIER	RESULT	QUALIFIER
XYLENES (TOTAL)	UG/KG	VOA					410	J			970	

TABLE 3.4-2

NAVSTA-SAN DIEGO
SITE 2 SOILS
ORGANIC COMPOUNDS

		SAMPLE NUMBER:	NS2-BH04-S03-10		NS2-BH05-S01-5		NS2-BH05-S02-10		NS2-BH05-S03-10		NS2-BH05-S03-5	
		SAMPLING DATE:	02/05/91		02/05/91		02/05/91		02/05/91		02/05/91	
		BORING:	BH04		BH05		BH05		BH05		BH05	
		SITE:	NS2		NS2		NS2		NS2		NS2	
		DEPTH:	10		5		10		10		5	
COMPOUND NAME	UNITS	TEST CODE	RESULT	QUALIFIER	RESULT	QUALIFIER	RESULT	QUALIFIER	RESULT	QUALIFIER	RESULT	QUALIFIER
1,2-DICHLOROBENZENE	UG/KG	BNA										
2-METHYLNAPHTHALENE	UG/KG	BNA										
2-METHYLPHENOL	UG/KG	BNA										
4-METHYLPHENOL	UG/KG	BNA										
ACENAPHTHENE	UG/KG	BNA										
ANTHRACENE	UG/KG	BNA										
BENZO(A)ANTHRACENE	UG/KG	BNA										
BENZO(A)PYRENE	UG/KG	BNA										
BENZO(B)FLUORANTHENE	UG/KG	BNA										
BENZO(G,H,I)PERYLENE	UG/KG	BNA										
BENZO(K)FLUORANTHENE	UG/KG	BNA										
BENZOIC ACID	UG/KG	BNA										
BIS(2-ETHYLHEXYL)PHTHALATE	UG/KG	BNA										
CHRYSENE	UG/KG	BNA										
DI-N-BUTYLPHTHALATE	UG/KG	BNA										
DIBENZ(A,H)ANTHRACENE	UG/KG	BNA										
DIBENZOFURAN	UG/KG	BNA										
DIETHYLPHTHALATE	UG/KG	BNA										
FLUORANTHENE	UG/KG	BNA										
FLUORENE	UG/KG	BNA										
INDENO(1,2,3-C,D)PYRENE	UG/KG	BNA										
NAPHTHALENE	UG/KG	BNA										
PHENANTHRENE	UG/KG	BNA										
PHENOL	UG/KG	BNA										
PYRENE	UG/KG	BNA			63	J						
OCDD	PG/G	DIOXINS	10400.0									
TOTAL HpCDD	PG/G	DIOXINS	3990.0									
TOTAL HxCDD	PG/G	DIOXINS	810.0									
TOTAL PeCDD	PG/G	DIOXINS	107.0									
OCDF	PG/G	FURANS										
TOTAL HpCDF	PG/G	FURANS	220.0									
TOTAL HxCDF	PG/G	FURANS	195.0	A							3.6	A
TOTAL PeCDF	PG/G	FURANS	737.0	A							9.9	A
TOTAL TCDF	PG/G	FURANS	1230.0	A							15.7	A
4,4'-DDD	UG/KG	PEST / PCB										
4,4'-DDT	UG/KG	PEST / PCB										
PCB-1260	UG/KG	PEST / PCB										
DIESEL	MG/KG	TPHC			115							
HYDRAULIC OIL	MG/KG	TPHC										
MOTOR OIL	MG/KG	TPHC										
STODDARD	MG/KG	TPHC										
1,1,1-TRICHLOROETHANE	UG/KG	VOA					8					
2-BUTANONE	UG/KG	VOA										
ACETONE	UG/KG	VOA					160	B				
CARBON DISULFIDE	UG/KG	VOA					3	J				
ETHYLBENZENE	UG/KG	VOA										
METHYLENE CHLORIDE	UG/KG	VOA										
TOLUENE	UG/KG	VOA					21					
TRICHLOROETHENE	UG/KG	VOA										

TABLE 3.4-2

NAVSTA-SAN DIEGO
SITE 2 SOILS
ORGANIC COMPOUNDS

		SAMPLE NUMBER:	NS2-BH04-S03-10		NS2-BH05-S01-5		NS2-BH05-S02-10		NS2-BH05-S03-10		NS2-BH05-S03-5	
		SAMPLING DATE:	02/05/91		02/05/91		02/05/91		02/05/91		02/05/91	
		BORING:	BH04		BH05		BH05		BH05		BH05	
		SITE:	NS2		NS2		NS2		NS2		NS2	
		DEPTH:	10		5		10		10		5	
COMPOUND NAME	UNITS	TEST CODE	RESULT	QUALIFIER	RESULT	QUALIFIER	RESULT	QUALIFIER	RESULT	QUALIFIER	RESULT	QUALIFIER
XYLENES (TOTAL)	UG/KG	VOA										

TABLE 3.4-2

NAVSTA-SAN DIEGO
SITE 2 SOILS
ORGANIC COMPOUNDS

		SAMPLE NUMBER:	NS2-BH05-S04-10		NS2-BH05-S04-5		NS2-BH06-S01-10		NS2-BH06-S02-15		NS2-BH07-S01-10	
		SAMPLING DATE:	02/05/91		02/05/91		02/05/91		02/05/91		02/06/91	
		BORING:	BH05		BH05		BH06		BH06		BH07	
		SITE:	NS2		NS2		NS2		NS2		NS2	
		DEPTH:	10		5		10		15		10	
COMPOUND NAME	UNITS	TEST CODE	RESULT	QUALIFIER	RESULT	QUALIFIER	RESULT	QUALIFIER	RESULT	QUALIFIER	RESULT	QUALIFIER
1,2-DICHLOROBENZENE	UG/KG	BNA										
2-METHYLNAPHTHALENE	UG/KG	BNA										
2-METHYLPHENOL	UG/KG	BNA										
4-METHYLPHENOL	UG/KG	BNA										
ACENAPHTHENE	UG/KG	BNA										
ANTHRACENE	UG/KG	BNA										
BENZO(A)ANTHRACENE	UG/KG	BNA										
BENZO(A)PYRENE	UG/KG	BNA										
BENZO(B)FLUORANTHENE	UG/KG	BNA										
BENZO(G,H,I)PERYLENE	UG/KG	BNA										
BENZO(K)FLUORANTHENE	UG/KG	BNA										
BENZOIC ACID	UG/KG	BNA										
BIS(2-ETHYLHEXYL)PHTHALATE	UG/KG	BNA										
CHRYSENE	UG/KG	BNA										
DI-N-BUTYLPHTHALATE	UG/KG	BNA										
DIBENZ(A,H)ANTHRACENE	UG/KG	BNA										
DIBENZOFURAN	UG/KG	BNA										
DIETHYLPHTHALATE	UG/KG	BNA										
FLUORANTHENE	UG/KG	BNA										
FLUORENE	UG/KG	BNA										
INDENO(1,2,3-C,D)PYRENE	UG/KG	BNA										
NAPHTHALENE	UG/KG	BNA										
PHENANTHRENE	UG/KG	BNA										
PHENOL	UG/KG	BNA										
PYRENE	UG/KG	BNA										
OCDD	PG/G	DIOXINS	12.2		12.2							
TOTAL HpCDD	PG/G	DIOXINS	7.2		7.2							
TOTAL HxCDD	PG/G	DIOXINS										
TOTAL PeCDD	PG/G	DIOXINS										
OCDF	PG/G	FURANS										
TOTAL HpCDF	PG/G	FURANS	1.8		1.8							
TOTAL HxCDF	PG/G	FURANS	2.0	A	2.0	A						
TOTAL PeCDF	PG/G	FURANS	8.5	A	8.5	A						
TOTAL TCDF	PG/G	FURANS	14.2	A	14.2	A						
4,4'-DDD	UG/KG	PEST / PCB										
4,4'-DDT	UG/KG	PEST / PCB										
PCB-1260	UG/KG	PEST / PCB										
DIESEL	MG/KG	TPHC					16		10		72	
HYDRAULIC OIL	MG/KG	TPHC										
MOTOR OIL	MG/KG	TPHC										
STODDARD	MG/KG	TPHC					10					
1,1,1-TRICHLOROETHANE	UG/KG	VOA										
2-BUTANONE	UG/KG	VOA										
ACETONE	UG/KG	VOA							86		430	B
CARBON DISULFIDE	UG/KG	VOA										
ETHYLBENZENE	UG/KG	VOA										
METHYLENE CHLORIDE	UG/KG	VOA										
TOLUENE	UG/KG	VOA									14	
TRICHLOROETHENE	UG/KG	VOA										

TABLE 3.4-2

NAVSTA-SAN DIEGO
SITE 2 SOILS
ORGANIC COMPOUNDS

		SAMPLE NUMBER:	NS2-BH05-S04-10		NS2-BH05-S04-5		NS2-BH06-S01-10		NS2-BH06-S02-15		NS2-BH07-S01-10	
		SAMPLING DATE:	02/05/91		02/05/91		02/05/91		02/05/91		02/06/91	
		BORING:	BH05		BH05		BH06		BH06		BH07	
		SITE:	NS2		NS2		NS2		NS2		NS2	
		DEPTH:	10		5		10		15		10	
COMPOUND NAME	UNITS	TEST CODE	RESULT	QUALIFIER	RESULT	QUALIFIER	RESULT	QUALIFIER	RESULT	QUALIFIER	RESULT	QUALIFIER
XYLENES (TOTAL)	UG/KG	VOA										

TABLE 3.4-2

NAVSTA-SAN DIEGO
SITE 2 SOILS
ORGANIC COMPOUNDS

		SAMPLE NUMBER:	NS2-BH07-S02-15		NS2-BH08-S01-5		NS2-BH08-S01-5-FD		NS2-BH08-S03-15		NS2-BH09-S01-5	
		SAMPLING DATE:	02/06/91		02/06/91		02/06/91		02/06/91		02/07/91	
		BORING:	BH07		BH08		BH08		BH08		BH09	
		SITE:	NS2		NS2		NS2		NS2		NS2	
		DEPTH:	15		5		5-FD		15		5	
COMPOUND NAME	UNITS	TEST CODE	RESULT	QUALIFIER	RESULT	QUALIFIER	RESULT	QUALIFIER	RESULT	QUALIFIER	RESULT	QUALIFIER
1,2-DICHLOROBENZENE	UG/KG	BNA										
2-METHYLNAPHTHALENE	UG/KG	BNA							2900			
2-METHYLPHENOL	UG/KG	BNA							150	J		
4-METHYLPHENOL	UG/KG	BNA							200	J		
ACENAPHTHENE	UG/KG	BNA										
ANTHRACENE	UG/KG	BNA										
BENZO(A)ANTHRACENE	UG/KG	BNA										
BENZO(A)PYRENE	UG/KG	BNA										
BENZO(B)FLUORANTHENE	UG/KG	BNA										
BENZO(G,H,I)PERYLENE	UG/KG	BNA										
BENZO(K)FLUORANTHENE	UG/KG	BNA										
BENZOIC ACID	UG/KG	BNA									60	J
BIS(2-ETHYLHEXYL)PHTHALATE	UG/KG	BNA							96	J		
CHRYSENE	UG/KG	BNA										
DI-N-BUTYLPHTHALATE	UG/KG	BNA										
DIBENZ(A,H)ANTHRACENE	UG/KG	BNA										
DIBENZOFURAN	UG/KG	BNA										
DIETHYLPHTHALATE	UG/KG	BNA										
FLUORANTHENE	UG/KG	BNA										
FLUORENE	UG/KG	BNA										
INDENO(1,2,3-C,D)PYRENE	UG/KG	BNA										
NAPHTHALENE	UG/KG	BNA							2000			
PHENANTHRENE	UG/KG	BNA										
PHENOL	UG/KG	BNA							180	J		
PYRENE	UG/KG	BNA										
OCDD	PG/G	DIOXINS										
TOTAL HpCDD	PG/G	DIOXINS										
TOTAL HxCDD	PG/G	DIOXINS										
TOTAL PeCDD	PG/G	DIOXINS										
OCDF	PG/G	FURANS										
TOTAL HpCDF	PG/G	FURANS										
TOTAL HxCDF	PG/G	FURANS										
TOTAL PeCDF	PG/G	FURANS										
TOTAL TCDF	PG/G	FURANS										
4,4'-DDD	UG/KG	PEST / PCB										
4,4'-DDT	UG/KG	PEST / PCB										
PCB-1260	UG/KG	PEST / PCB										
DIESEL	MG/KG	TPHC									17	Z
HYDRAULIC OIL	MG/KG	TPHC									134	Z
MOTOR OIL	MG/KG	TPHC									164	
STODDARD	MG/KG	TPHC							185			
1,1,1-TRICHLOROETHANE	UG/KG	VOA										
2-BUTANONE	UG/KG	VOA										
ACETONE	UG/KG	VOA	200		34		31					
CARBON DISULFIDE	UG/KG	VOA										
ETHYLBENZENE	UG/KG	VOA										
METHYLENE CHLORIDE	UG/KG	VOA										
TOLUENE	UG/KG	VOA	42		13						3	J
TRICHLOROETHENE	UG/KG	VOA										

TABLE 3.4-2

NAVSTA-SAN DIEGO
SITE 2 SOILS
ORGANIC COMPOUNDS

		SAMPLE NUMBER:	NS2-BH07-S02-15		NS2-BH08-S01-5		NS2-BH08-S01-5-FD		NS2-BH08-S03-15		NS2-BH09-S01-5	
		SAMPLING DATE:	02/06/91		02/06/91		02/06/91		02/06/91		02/07/91	
		BORING:	BH07		BH08		BH08		BH08		BH09	
		SITE:	NS2		NS2		NS2		NS2		NS2	
		DEPTH:	15		5		5-FD		15		5	
COMPOUND NAME	UNITS	TEST CODE	RESULT	QUALIFIER	RESULT	QUALIFIER	RESULT	QUALIFIER	RESULT	QUALIFIER	RESULT	QUALIFIER
XYLENES (TOTAL)	UG/KG	VOA										

TABLE 3.4-2

NAVSTA-SAN DIEGO
SITE 2 SOILS
ORGANIC COMPOUNDS

		SAMPLE NUMBER:	NS2-BH09-S02-10		NS2-BH10-S01-10		NS2-BH10-S02-15		NS2-BH10-S03-10-FD		NS2-BH11-S01-5	
		SAMPLING DATE:	02/07/91		02/07/91		02/07/91		02/07/91		02/05/91	
		BORING:	BH09		BH10		BH10		BH10		BH11	
		SITE:	NS2		NS2		NS2		NS2		NS2	
		DEPTH:	10		10		15		10-FD		5	
COMPOUND NAME	UNITS	TEST CODE	RESULT	QUALIFIER	RESULT	QUALIFIER	RESULT	QUALIFIER	RESULT	QUALIFIER	RESULT	QUALIFIER
1,2-DICHLOROBENZENE	UG/KG	BNA										
2-METHYLNAPHTHALENE	UG/KG	BNA										
2-METHYLPHENOL	UG/KG	BNA										
4-METHYLPHENOL	UG/KG	BNA										
ACENAPHTHENE	UG/KG	BNA										
ANTHRACENE	UG/KG	BNA										
BENZO(A)ANTHRACENE	UG/KG	BNA										
BENZO(A)PYRENE	UG/KG	BNA										
BENZO(B)FLUORANTHENE	UG/KG	BNA										
BENZO(G,H,I)PERYLENE	UG/KG	BNA										
BENZO(K)FLUORANTHENE	UG/KG	BNA										
BENZOIC ACID	UG/KG	BNA										
BIS(2-ETHYLHEXYL)PHTHALATE	UG/KG	BNA										
CHRYSENE	UG/KG	BNA										
DI-N-BUTYLPHTHALATE	UG/KG	BNA										
DIBENZ(A,H)ANTHRACENE	UG/KG	BNA										
DIBENZOFURAN	UG/KG	BNA										
DIETHYLPHTHALATE	UG/KG	BNA										
FLUORANTHENE	UG/KG	BNA										
FLUORENE	UG/KG	BNA										
INDENO(1,2,3-C,D)PYRENE	UG/KG	BNA										
NAPHTHALENE	UG/KG	BNA										
PHENANTHRENE	UG/KG	BNA										
PHENOL	UG/KG	BNA										
PYRENE	UG/KG	BNA										
OCDD	PG/G	DIOXINS										
TOTAL HpCDD	PG/G	DIOXINS										
TOTAL HxCDD	PG/G	DIOXINS										
TOTAL PeCDD	PG/G	DIOXINS										
OCDF	PG/G	FURANS										
TOTAL HpCDF	PG/G	FURANS										
TOTAL HxCDF	PG/G	FURANS										
TOTAL PeCDF	PG/G	FURANS										
TOTAL TCDF	PG/G	FURANS										
4,4'-DDD	UG/KG	PEST / PCB										
4,4'-DDT	UG/KG	PEST / PCB										
PCB-1260	UG/KG	PEST / PCB										
DIESEL	MG/KG	TPHC									14	
HYDRAULIC OIL	MG/KG	TPHC	71	Z	18	Z	25	Z	16	Z		
MOTOR OIL	MG/KG	TPHC	57		27		27		22			
STODDARD	MG/KG	TPHC										
1,1,1-TRICHLOROETHANE	UG/KG	VOA										
2-BUTANONE	UG/KG	VOA									3	J
ACETONE	UG/KG	VOA									320	B
CARBON DISULFIDE	UG/KG	VOA										
ETHYLBENZENE	UG/KG	VOA										
METHYLENE CHLORIDE	UG/KG	VOA									32	B
TOLUENE	UG/KG	VOA	2	J			2	J			28	
TRICHLOROETHENE	UG/KG	VOA										

TABLE 3.4-2

NAVSTA-SAN DIEGO
SITE 2 SOILS
ORGANIC COMPOUNDS

		SAMPLE NUMBER:	NS2-BH09-S02-10		NS2-BH10-S01-10		NS2-BH10-S02-15		NS2-BH10-S03-10-FD		NS2-BH11-S01-5	
		SAMPLING DATE:	02/07/91		02/07/91		02/07/91		02/07/91		02/05/91	
		BORING:	BH09		BH10		BH10		BH10		BH11	
		SITE:	NS2		NS2		NS2		NS2		NS2	
		DEPTH:	10		10		15		10-FD		5	
COMPOUND NAME	UNITS	TEST CODE	RESULT	QUALIFIER	RESULT	QUALIFIER	RESULT	QUALIFIER	RESULT	QUALIFIER	RESULT	QUALIFIER
XYLENES (TOTAL)	UG/KG	VOA										

TABLE 3.4-2

NAVSTA-SAN DIEGO
SITE 2 SOILS
ORGANIC COMPOUNDS

		SAMPLE NUMBER:	NS2-BH11-S02-10		NS2-BH12-S01-5		NS2-BH12-S02-15		NS2-BH13-S01-10		NS2-BH13-S02-5	
		SAMPLING DATE:	02/05/91		02/05/91		02/05/91		02/06/91		02/06/91	
		BORING:	BH11		BH12		BH12		BH13		BH13	
		SITE:	NS2		NS2		NS2		NS2		NS2	
		DEPTH:	10		5		15		10		5	
COMPOUND NAME	UNITS	TEST CODE	RESULT	QUALIFIER	RESULT	QUALIFIER	RESULT	QUALIFIER	RESULT	QUALIFIER	RESULT	QUALIFIER
1,2-DICHLOROBENZENE	UG/KG	BNA										
2-METHYLNAPHTHALENE	UG/KG	BNA										
2-METHYLPHENOL	UG/KG	BNA										
4-METHYLPHENOL	UG/KG	BNA										
ACENAPHTHENE	UG/KG	BNA										
ANTHRACENE	UG/KG	BNA										
BENZO(A)ANTHRACENE	UG/KG	BNA										
BENZO(A)PYRENE	UG/KG	BNA										
BENZO(B)FLUORANTHENE	UG/KG	BNA										
BENZO(G,H,I)PERYLENE	UG/KG	BNA										
BENZO(K)FLUORANTHENE	UG/KG	BNA										
BENZOIC ACID	UG/KG	BNA										
BIS(2-ETHYLHEXYL)PHTHALATE	UG/KG	BNA										
CHRYSENE	UG/KG	BNA										
DI-N-BUTYLPHTHALATE	UG/KG	BNA										
DIBENZ(A,H)ANTHRACENE	UG/KG	BNA										
DIBENZOFURAN	UG/KG	BNA										
DIETHYLPHTHALATE	UG/KG	BNA										
FLUORANTHENE	UG/KG	BNA										
FLUORENE	UG/KG	BNA										
INDENO(1,2,3-C,D)PYRENE	UG/KG	BNA										
NAPHTHALENE	UG/KG	BNA										
PHENANTHRENE	UG/KG	BNA										
PHENOL	UG/KG	BNA										
PYRENE	UG/KG	BNA										
OCDD	PG/G	DIOXINS										
TOTAL HpCDD	PG/G	DIOXINS										
TOTAL HxCDD	PG/G	DIOXINS										
TOTAL PeCDD	PG/G	DIOXINS										
OCDF	PG/G	FURANS										
TOTAL HpCDF	PG/G	FURANS										
TOTAL HxCDF	PG/G	FURANS										
TOTAL PeCDF	PG/G	FURANS										
TOTAL TCDF	PG/G	FURANS										
4,4'-DDD	UG/KG	PEST / PCB										
4,4'-DDT	UG/KG	PEST / PCB										
PCB-1260	UG/KG	PEST / PCB										
DIESEL	MG/KG	TPHC	14		15		20					
HYDRAULIC OIL	MG/KG	TPHC										
MOTOR OIL	MG/KG	TPHC					360	Z				
STODDARD	MG/KG	TPHC										
1,1,1-TRICHLOROETHANE	UG/KG	VOA										
2-BUTANONE	UG/KG	VOA	2	J								
ACETONE	UG/KG	VOA			1200	B	290	B			110	
CARBON DISULFIDE	UG/KG	VOA										
ETHYLBENZENE	UG/KG	VOA										
METHYLENE CHLORIDE	UG/KG	VOA										
TOLUENE	UG/KG	VOA									47	
TRICHLOROETHENE	UG/KG	VOA										

TABLE 3.4-2

NAVSTA-SAN DIEGO
SITE 2 SOILS
ORGANIC COMPOUNDS

		SAMPLE NUMBER:	NS2-BH11-S02-10		NS2-BH12-S01-5		NS2-BH12-S02-15		NS2-BH13-S01-10		NS2-BH13-S02-5	
		SAMPLING DATE:	02/05/91		02/05/91		02/05/91		02/06/91		02/06/91	
		BORING:	BH11		BH12		BH12		BH13		BH13	
		SITE:	NS2		NS2		NS2		NS2		NS2	
		DEPTH:	10		5		15		10		5	
COMPOUND NAME	UNITS	TEST CODE	RESULT	QUALIFIER	RESULT	QUALIFIER	RESULT	QUALIFIER	RESULT	QUALIFIER	RESULT	QUALIFIER
XYLENES (TOTAL)	UG/KG	VOA										

TABLE 3.4-2

NAVSTA-SAN DIEGO
SITE 2 SOILS
ORGANIC COMPOUNDS

		SAMPLE NUMBER:	NS2-BH14-S01-10		NS2-BH14-S02-15		NS2-BH15-S01-5		NS2-BH15-S02-15		NS2-MW10-S01-5	
		SAMPLING DATE:	02/07/91		02/07/91		02/06/91		02/06/91		02/04/91	
		BORING:	BH14		BH14		BH15		BH15		MW10	
		SITE:	NS2		NS2		NS2		NS2		NS2	
		DEPTH:	10		15		5		15		5	
COMPOUND NAME	UNITS	TEST CODE	RESULT	QUALIFIER	RESULT	QUALIFIER	RESULT	QUALIFIER	RESULT	QUALIFIER	RESULT	QUALIFIER
1,2-DICHLOROBENZENE	UG/KG	BNA										
2-METHYLNAPHTHALENE	UG/KG	BNA										
2-METHYLPHENOL	UG/KG	BNA										
4-METHYLPHENOL	UG/KG	BNA										
ACENAPHTHENE	UG/KG	BNA										
ANTHRACENE	UG/KG	BNA									170	J
BENZO(A)ANTHRACENE	UG/KG	BNA									800	
BENZO(A)PYRENE	UG/KG	BNA									520	J
BENZO(B)FLUORANTHENE	UG/KG	BNA					82	J			1200	
BENZO(G,H,I)PERYLENE	UG/KG	BNA									480	J
BENZO(K)FLUORANTHENE	UG/KG	BNA					120	J			1000	
BENZOIC ACID	UG/KG	BNA										
BIS(2-ETHYLHEXYL)PHTHALATE	UG/KG	BNA					220	J			750	
CHRYSENE	UG/KG	BNA					110	J			1400	
DI-N-BUTYLPHTHALATE	UG/KG	BNA									170	J
DIBENZ(A,H)ANTHRACENE	UG/KG	BNA									190	J
DIBENZOFURAN	UG/KG	BNA										
DIETHYLPHTHALATE	UG/KG	BNA										
FLUORANTHENE	UG/KG	BNA					150	J			1800	
FLUORENE	UG/KG	BNA										
INDENO(1,2,3-C,D)PYRENE	UG/KG	BNA									430	J
NAPHTHALENE	UG/KG	BNA										
PHENANTHRENE	UG/KG	BNA					54	J			1100	
PHENOL	UG/KG	BNA									120	J
PYRENE	UG/KG	BNA					140	J			2100	
OCDD	PG/G	DIOXINS										
TOTAL HpCDD	PG/G	DIOXINS										
TOTAL HxCDD	PG/G	DIOXINS										
TOTAL PeCDD	PG/G	DIOXINS										
OCDF	PG/G	FURANS										
TOTAL HpCDF	PG/G	FURANS										
TOTAL HxCDF	PG/G	FURANS										
TOTAL PeCDF	PG/G	FURANS										
TOTAL TCDF	PG/G	FURANS										
4,4'-DDD	UG/KG	PEST / PCB										
4,4'-DDT	UG/KG	PEST / PCB									140	J
PCB-1260	UG/KG	PEST / PCB					560	J				
DIESEL	MG/KG	TPHC					11				190	
HYDRAULIC OIL	MG/KG	TPHC	30	Z	17	Z						
MOTOR OIL	MG/KG	TPHC	30		27							
STODDARD	MG/KG	TPHC										
1,1,1-TRICHLOROETHANE	UG/KG	VOA										
2-BUTANONE	UG/KG	VOA										
ACETONE	UG/KG	VOA					1100	BJ				
CARBON DISULFIDE	UG/KG	VOA										
ETHYLBENZENE	UG/KG	VOA										
METHYLENE CHLORIDE	UG/KG	VOA										
TOLUENE	UG/KG	VOA									2	J
TRICHLOROETHENE	UG/KG	VOA										

TABLE 3.4-2

NAVSTA-SAN DIEGO
SITE 2 SOILS
ORGANIC COMPOUNDS

		SAMPLE NUMBER:	NS2-BH14-S01-10		NS2-BH14-S02-15		NS2-BH15-S01-5		NS2-BH15-S02-15		NS2-MW10-S01-5	
		SAMPLING DATE:	02/07/91		02/07/91		02/06/91		02/06/91		02/04/91	
		BORING:	BH14		BH14		BH15		BH15		MW10	
		SITE:	NS2		NS2		NS2		NS2		NS2	
		DEPTH:	10		15		5		15		5	
COMPOUND NAME	UNITS	TEST CODE	RESULT	QUALIFIER	RESULT	QUALIFIER	RESULT	QUALIFIER	RESULT	QUALIFIER	RESULT	QUALIFIER
XYLENES (TOTAL)	UG/KG	VOA										

TABLE 3.4-2

NAVSTA-SAN DIEGO
SITE 2 SOILS
ORGANIC COMPOUNDS

		SAMPLE NUMBER:	NS2-MW10-S02-10		NS2-MW10-S03-15		NS2-MW11-S01-5		NS2-MW11-S02-10		NS2-MW11-S03-15	
		SAMPLING DATE:	02/04/91		02/04/91		02/07/91		02/07/91		02/07/91	
		BORING:	MW10		MW10		MW11		MW11		MW11	
		SITE:	NS2		NS2		NS2		NS2		NS2	
		DEPTH:	10		15		5		10		15	
COMPOUND NAME	UNITS	TEST CODE	RESULT	QUALIFIER	RESULT	QUALIFIER	RESULT	QUALIFIER	RESULT	QUALIFIER	RESULT	QUALIFIER
1,2-DICHLOROBENZENE	UG/KG	BNA										
2-METHYLNAPHTHALENE	UG/KG	BNA			67000	J						
2-METHYLPHENOL	UG/KG	BNA										
4-METHYLPHENOL	UG/KG	BNA										
ACENAPHTHENE	UG/KG	BNA										
ANTHRACENE	UG/KG	BNA										
BENZO(A)ANTHRACENE	UG/KG	BNA										
BENZO(A)PYRENE	UG/KG	BNA										
BENZO(B)FLUORANTHENE	UG/KG	BNA										
BENZO(G,H,I)PERYLENE	UG/KG	BNA										
BENZO(K)FLUORANTHENE	UG/KG	BNA										
BENZOIC ACID	UG/KG	BNA										
BIS(2-ETHYLHEXYL)PHTHALATE	UG/KG	BNA										
CHRYSENE	UG/KG	BNA										
DI-N-BUTYLPHTHALATE	UG/KG	BNA										
DIBENZ(A,H)ANTHRACENE	UG/KG	BNA										
DIBENZOFURAN	UG/KG	BNA										
DIETHYLPHTHALATE	UG/KG	BNA									120	J
FLUORANTHENE	UG/KG	BNA										
FLUORENE	UG/KG	BNA			7400	J						
INDENO(1,2,3-C,D)PYRENE	UG/KG	BNA										
NAPHTHALENE	UG/KG	BNA			25000	J						
PHENANTHRENE	UG/KG	BNA			12000	J						
PHENOL	UG/KG	BNA										
PYRENE	UG/KG	BNA										
OCDD	PG/G	DIOXINS										
TOTAL HpCDD	PG/G	DIOXINS										
TOTAL HxCDD	PG/G	DIOXINS										
TOTAL PeCDD	PG/G	DIOXINS										
OCDF	PG/G	FURANS										
TOTAL HpCDF	PG/G	FURANS										
TOTAL HxCDF	PG/G	FURANS										
TOTAL PeCDF	PG/G	FURANS										
TOTAL TCDF	PG/G	FURANS										
4,4'-DDD	UG/KG	PEST / PCB										
4,4'-DDT	UG/KG	PEST / PCB										
PCB-1260	UG/KG	PEST / PCB										
DIESEL	MG/KG	TPHC			16000	D						
HYDRAULIC OIL	MG/KG	TPHC										
MOTOR OIL	MG/KG	TPHC									14	
STODDARD	MG/KG	TPHC										
1,1,1-TRICHLOROETHANE	UG/KG	VOA										
2-BUTANONE	UG/KG	VOA			400	J						
ACETONE	UG/KG	VOA					28		24		15	
CARBON DISULFIDE	UG/KG	VOA										
ETHYLBENZENE	UG/KG	VOA			710	J						
METHYLENE CHLORIDE	UG/KG	VOA					19	B	11	B	10	B
TOLUENE	UG/KG	VOA										
TRICHLOROETHENE	UG/KG	VOA										

TABLE 3.4-2

NAVSTA-SAN DIEGO
SITE 2 SOILS
ORGANIC COMPOUNDS

		SAMPLE NUMBER:	NS2-MW10-S02-10		NS2-MW10-S03-15		NS2-MW11-S01-5		NS2-MW11-S02-10		NS2-MW11-S03-15	
		SAMPLING DATE:	02/04/91		02/04/91		02/07/91		02/07/91		02/07/91	
		BORING:	MW10		MW10		MW11		MW11		MW11	
		SITE:	NS2		NS2		NS2		NS2		NS2	
		DEPTH:	10		15		5		10		15	
COMPOUND NAME	UNITS	TEST CODE	RESULT	QUALIFIER	RESULT	QUALIFIER	RESULT	QUALIFIER	RESULT	QUALIFIER	RESULT	QUALIFIER
XYLENES (TOTAL)	UG/KG	VOA										

TABLE 3.4-2

NAVSTA-SAN DIEGO
SITE 2 SOILS
ORGANIC COMPOUNDS

		SAMPLE NUMBER:	NS2-MW12-S01-5		NS2-MW12-S01-5-FD		NS2-MW12-S02-10		NS2-MW12-S03-15	
		SAMPLING DATE:	02/07/91		02/07/91		02/07/91		02/07/91	
		BORING:	MW12		MW12		MW12		MW12	
		SITE:	NS2		NS2		NS2		NS2	
		DEPTH:	5		5-FD		10		15	
COMPOUND NAME	UNITS	TEST CODE	RESULT	QUALIFIER	RESULT	QUALIFIER	RESULT	QUALIFIER	RESULT	QUALIFIER
1,2-DICHLOROBENZENE	UG/KG	BNA								
2-METHYLNAPHTHALENE	UG/KG	BNA								
2-METHYLPHENOL	UG/KG	BNA								
4-METHYLPHENOL	UG/KG	BNA								
ACENAPHTHENE	UG/KG	BNA								
ANTHRACENE	UG/KG	BNA			67	J				
BENZO(A)ANTHRACENE	UG/KG	BNA			350					
BENZO(A)PYRENE	UG/KG	BNA			280	J				
BENZO(B)FLUORANTHENE	UG/KG	BNA			440					
BENZO(G,H,I)PERYLENE	UG/KG	BNA			260	J				
BENZO(K)FLUORANTHENE	UG/KG	BNA			390					
BENZOIC ACID	UG/KG	BNA								
BIS(2-ETHYLHEXYL)PHTHALATE	UG/KG	BNA								
CHRYSENE	UG/KG	BNA			540					
DI-N-BUTYLPHTHALATE	UG/KG	BNA								
DIBENZ(A,H)ANTHRACENE	UG/KG	BNA								
DIBENZOFURAN	UG/KG	BNA								
DIETHYLPHTHALATE	UG/KG	BNA								
FLUORANTHENE	UG/KG	BNA			960					
FLUORENE	UG/KG	BNA								
INDENO(1,2,3-C,D)PYRENE	UG/KG	BNA			220	J				
NAPHTHALENE	UG/KG	BNA								
PHENANTHRENE	UG/KG	BNA			310	J				
PHENOL	UG/KG	BNA								
PYRENE	UG/KG	BNA			980					
OCDD	PG/G	DIOXINS								
TOTAL HpCDD	PG/G	DIOXINS								
TOTAL HxCDD	PG/G	DIOXINS								
TOTAL PeCDD	PG/G	DIOXINS								
OCDF	PG/G	FURANS								
TOTAL HpCDF	PG/G	FURANS								
TOTAL HxCDF	PG/G	FURANS								
TOTAL PeCDF	PG/G	FURANS								
TOTAL TCDF	PG/G	FURANS								
4,4'-DDD	UG/KG	PEST / PCB			20	J				
4,4'-DDT	UG/KG	PEST / PCB								
PCB-1260	UG/KG	PEST / PCB								
DIESEL	MG/KG	TPHC								
HYDRAULIC OIL	MG/KG	TPHC			20	Z				
MOTOR OIL	MG/KG	TPHC			120	Z				
STODDARD	MG/KG	TPHC								
1,1,1-TRICHLOROETHANE	UG/KG	VOA								
2-BUTANONE	UG/KG	VOA								
ACETONE	UG/KG	VOA								
CARBON DISULFIDE	UG/KG	VOA								
ETHYLBENZENE	UG/KG	VOA								
METHYLENE CHLORIDE	UG/KG	VOA								
TOLUENE	UG/KG	VOA								
TRICHLOROETHENE	UG/KG	VOA								

TABLE 3.4-2

NAVSTA-SAN DIEGO
SITE 2 SOILS
ORGANIC COMPOUNDS

		SAMPLE NUMBER:	NS2-MW12-S01-5		NS2-MW12-S01-5-FD		NS2-MW12-S02-10		NS2-MW12-S03-15	
		SAMPLING DATE:	02/07/91		02/07/91		02/07/91		02/07/91	
		BORING:	MW12		MW12		MW12		MW12	
		SITE:	NS2		NS2		NS2		NS2	
		DEPTH:	5		5-FD		10		15	
COMPOUND NAME	UNITS	TEST CODE	RESULT	QUALIFIER	RESULT	QUALIFIER	RESULT	QUALIFIER	RESULT	QUALIFIER
XYLENES (TOTAL)	UG/KG	VOA								

DATA QUALIFIER DEFINITIONS

For the purposes of this document the following code letters and associated definitions are provided.

A - Possible interference from polychlorinated diphenyl ethers.

B - The concentration reported is greater than the instrument detection limit(IDL) but less than the contract required detection limit(CRDL).

D - Compounds identified in an analysis at a secondary dilution.

J · The associated value is an estimated quantity.

R - The data are unusable. (Note: Analyte may or may not be present.)

U - The material was analyzed for, but was not detected above the level of the associated value. The associated value is either the sample quantitation limit or the sample detection limit.

UJ - The material was analyzed for, but was not detected. The associated value is an estimate and may be inaccurate or imprecise.

Z - Matrix interference, not a confirmed concentration.

TABLE 3.4-3

NAVSTA-SAN DIEGO
SITE 2 SOILS
INORGANIC COMPOUNDS

		SAMPLE NUMBER:	NS2-BH01-S01-5		NS2-BH01-S02-15		NS2-BH02-S01-10		NS2-BH02-S02-15		NS2-BH02-S03-15 FD	
		SAMPLING DATE:	02/04/91		02/04/91		02/04/91		02/04/91		02/04/91	
		BORING:	BH01		BH01		BH02		BH02		BH02	
		SITE:	NS2		NS2		NS2		NS2		NS2	
		DEPTH:	5		15		10		15		15 FD	
COMPOUND NAME	UNITS	TEST CODE	RESULT	QUALIFIER	RESULT	QUALIFIER	RESULT	QUALIFIER	RESULT	QUALIFIER	RESULT	QUALIFIER
ANTIMONY	MG/KG	CAC METALS							11.8	BJ	20.6	J
ARSENIC	MG/KG	CAC METALS	4.9		0.51	B	1.3	B	2.7	J	6.0	J
BARIUM	MG/KG	CAC METALS	36.6	B	119		30.2	B	149		258	
BERYLLIUM	MG/KG	CAC METALS	0.73	B	2.2		0.58	B	1.2		4.0	
CADMIUM	MG/KG	CAC METALS									0.99	B
CHROMIUM	MG/KG	CAC METALS	7.9		29.5		5.4		16.6		17.8	
COBALT	MG/KG	CAC METALS	4.0	B	13.1		3.6	B	6.5	B	11.4	
COPPER	MG/KG	CAC METALS	63.2		94.2		39.6		2440	J	524	J
LEAD	MG/KG	CAC METALS	207		2.0		13.2		462	J	403	J
MERCURY	MG/KG	CAC METALS	0.20						0.09	J	0.46	J
MOLYBDENUM	MG/KG	CAC METALS									3.2	B
NICKEL	MG/KG	CAC METALS			12.5		3.2	B	20.6		35.4	
SELENIUM	MG/KG	CAC METALS							0.26	B		
SILVER	MG/KG	CAC METALS			1.4	B						
THALLIUM	MG/KG	CAC METALS	0.92	B			0.42	B			0.57	B
VANADIUM	MG/KG	CAC METALS	28.2		83.3		18.0		50.1		70.9	
ZINC	MG/KG	CAC METALS	17.6		266		37.6		936	J	814	J
CAC WET EXTRACTION	DATE	CAC WET EX										
COPPER	MG/L	CAC WET EX							8.42		6.42	
LEAD	MG/L	CAC WET EX	0.133						0.309		0.319	
MERCURY	MG/L	CAC WET EX										

TABLE 3.4-3

NAVSTA-SAN DIEGO
SITE 2 SOILS
INORGANIC COMPOUNDS

		SAMPLE NUMBER:	NS2-BH03-S01-10		NS2-BH03-S02-15		NS2-BH04-S01-5		NS2-BH04-S02-10		NS2-BH05-S01-5	
		SAMPLING DATE:	02/04/91		02/04/91		02/05/91		02/05/91		02/05/91	
		BORING:	BH03		BH03		BH04		BH04		BH05	
		SITE:	NS2		NS2		NS2		NS2		NS2	
		DEPTH:	10		15		5		10		5	
COMPOUND NAME	UNITS	TEST CODE	RESULT	QUALIFIER	RESULT	QUALIFIER	RESULT	QUALIFIER	RESULT	QUALIFIER	RESULT	QUALIFIER
ANTIMONY	MG/KG	CAC METALS					9.6	BJ	15.3	J		
ARSENIC	MG/KG	CAC METALS	0.46	B	0.55	B	5.0	J	2.7	J	4.0	
BARIUM	MG/KG	CAC METALS	103		29.7	B	107		56.7		171	
BERYLLIUM	MG/KG	CAC METALS	1.6		0.62	B	2.5		1.3		4.2	
CADMIUM	MG/KG	CAC METALS										
CHROMIUM	MG/KG	CAC METALS	12.6		5.0		33.1		11.0		34.5	
COBALT	MG/KG	CAC METALS	8.0	B	2.7	B	8.3	B	4.2	B	16.8	
COPPER	MG/KG	CAC METALS	13.0		5.9		287	J	271	J		
LEAD	MG/KG	CAC METALS	3.6		0.71		319	J	352	J	12.1	
MERCURY	MG/KG	CAC METALS					0.71	J				
MOLYBDENUM	MG/KG	CAC METALS										
NICKEL	MG/KG	CAC METALS	1.9	B			17.2					
SELENIUM	MG/KG	CAC METALS										
SILVER	MG/KG	CAC METALS	0.74	B	0.63	B						
THALLIUM	MG/KG	CAC METALS			0.75	B					0.62	B
VANADIUM	MG/KG	CAC METALS	46.4		19.5		55.2		24.6		95.5	
ZINC	MG/KG	CAC METALS	27.8		9.1							
CAC WET EXTRACTION	DATE	CAC WET EX										
COPPER	MG/L	CAC WET EX					7.73		0.06			
LEAD	MG/L	CAC WET EX					0.238					
MERCURY	MG/L	CAC WET EX										

TABLE 3.4-3

NAVSTA-SAN DIEGO
SITE 2 SOILS
INORGANIC COMPOUNDS

		SAMPLE NUMBER:	NS2-BH05-S02-10		NS2-BH06-S01-10		NS2-BH06-S02-15		NS2-BH07-S01-10		NS2-BH07-S02-15	
		SAMPLING DATE:	02/05/91		02/05/91		02/05/91		02/06/91		02/06/91	
		BORING:	BH05		BH06		BH06		BH07		BH07	
		SITE:	NS2		NS2		NS2		NS2		NS2	
		DEPTH:	10		10		15		10		15	
COMPOUND NAME	UNITS	TEST CODE	RESULT	QUALIFIER	RESULT	QUALIFIER	RESULT	QUALIFIER	RESULT	QUALIFIER	RESULT	QUALIFIER
ANTIMONY	MG/KG	CAC METALS										
ARSENIC	MG/KG	CAC METALS	1.9	B	0.67	B	0.55	B	0.53	B	0.72	B
BARIUM	MG/KG	CAC METALS	78.5		52.1		50.1		37.2	B	47.0	B
BERYLLIUM	MG/KG	CAC METALS	1.9		0.27	B	0.49	B	0.52	B	0.51	B
CADMIUM	MG/KG	CAC METALS										
CHROMIUM	MG/KG	CAC METALS	13.9		6.0		5.3		5.1		6.0	
COBALT	MG/KG	CAC METALS	8.0	B	3.1	B	2.0	B	3.3	B	3.8	B
COPPER	MG/KG	CAC METALS										
LEAD	MG/KG	CAC METALS										
MERCURY	MG/KG	CAC METALS										
MOLYBDENUM	MG/KG	CAC METALS										
NICKEL	MG/KG	CAC METALS							2.5	B	2.3	B
SELENIUM	MG/KG	CAC METALS										
SILVER	MG/KG	CAC METALS										
THALLIUM	MG/KG	CAC METALS	0.93	B	0.61	B						
VANADIUM	MG/KG	CAC METALS	37.2		30.5		28.5		26.1		31.4	
ZINC	MG/KG	CAC METALS										
CAC WET EXTRACTION	DATE	CAC WET EX										
COPPER	MG/L	CAC WET EX										
LEAD	MG/L	CAC WET EX										
MERCURY	MG/L	CAC WET EX										

TABLE 3.4-3

NAVSTA-SAN DIEGO
SITE 2 SOILS
INORGANIC COMPOUNDS

		SAMPLE NUMBER:	NS2-BH08-S01-5		NS2-BH08-S01-5-FD		NS2-BH08-S03-15		NS2-BH09-S01-5		NS2-BH09-S02-10	
		SAMPLING DATE:	02/06/91		02/06/91		02/06/91		02/07/91		02/07/91	
		BORING:	BH08		BH08		BH08		BH09		BH09	
		SITE:	NS2		NS2		NS2		NS2		NS2	
		DEPTH:	5		5-FD		15		5		10	
COMPOUND NAME	UNITS	TEST CODE	RESULT	QUALIFIER	RESULT	QUALIFIER	RESULT	QUALIFIER	RESULT	QUALIFIER	RESULT	QUALIFIER
ANTIMONY	MG/KG	CAC METALS									7.0	B
ARSENIC	MG/KG	CAC METALS	0.53	B	1.7	B	0.57	B	0.55	B	2.6	
BARIUM	MG/KG	CAC METALS	26.0	B	66.2		27.8	B	25.2	B	60.4	
BERYLLIUM	MG/KG	CAC METALS	0.53	B	1.1		0.33	B			1.0	B
CADMIUM	MG/KG	CAC METALS										
CHROMIUM	MG/KG	CAC METALS	4.2		10.6		4.7		4.3		12.9	
COBALT	MG/KG	CAC METALS	2.1	B	5.0	B	2.5	B	1.7	B	6.3	B
COPPER	MG/KG	CAC METALS										
LEAD	MG/KG	CAC METALS							28.9			
MERCURY	MG/KG	CAC METALS										
MOLYBDENUM	MG/KG	CAC METALS										
NICKEL	MG/KG	CAC METALS			4.3	B			2.5	B	4.7	B
SELENIUM	MG/KG	CAC METALS										
SILVER	MG/KG	CAC METALS										
THALLIUM	MG/KG	CAC METALS										
VANADIUM	MG/KG	CAC METALS	20.7		40.7		20.6		11.6		34.2	
ZINC	MG/KG	CAC METALS									41.9	
CAC WET EXTRACTION	DATE	CAC WET EX										
COPPER	MG/L	CAC WET EX										
LEAD	MG/L	CAC WET EX										
MERCURY	MG/L	CAC WET EX										

TABLE 3.4-3

NAVSTA-SAN DIEGO
SITE 2 SOILS
INORGANIC COMPOUNDS

		SAMPLE NUMBER:	NS2-BH10-S01-10		NS2-BH10-S02-15		NS2-BH10-S03-10-FD		NS2-BH11-S01-5		NS2-BH11-S02-10	
		SAMPLING DATE:	02/07/91		02/07/91		02/07/91		02/05/91		02/05/91	
		BORING:	BH10		BH10		BH10		BH11		BH11	
		SITE:	NS2		NS2		NS2		NS2		NS2	
		DEPTH:	10		15		10-FD		5		10	
COMPOUND NAME	UNITS	TEST CODE	RESULT	QUALIFIER	RESULT	QUALIFIER	RESULT	QUALIFIER	RESULT	QUALIFIER	RESULT	QUALIFIER
ANTIMONY	MG/KG	CAC METALS									4.8	B
ARSENIC	MG/KG	CAC METALS	1.5	B	1.9	B	2.2	B	0.99	B	1.8	B
BARIUM	MG/KG	CAC METALS	18.9	B	75.0		26.7	B	34.7	B	29.5	B
BERYLLIUM	MG/KG	CAC METALS	0.26	B	0.73	B	0.47	B	0.42	B	0.48	B
CADMIUM	MG/KG	CAC METALS										
CHROMIUM	MG/KG	CAC METALS	5.0		8.3		4.6		5.4		5.0	
COBALT	MG/KG	CAC METALS	2.7	B	5.2	B	3.2	B	2.6	B	4.4	B
COPPER	MG/KG	CAC METALS			53.9							
LEAD	MG/KG	CAC METALS										
MERCURY	MG/KG	CAC METALS										
MOLYBDENUM	MG/KG	CAC METALS										
NICKEL	MG/KG	CAC METALS			3.8	B						
SELENIUM	MG/KG	CAC METALS										
SILVER	MG/KG	CAC METALS										
THALLIUM	MG/KG	CAC METALS										
VANADIUM	MG/KG	CAC METALS	15.8		33.9		18.0		22.8		19.6	
ZINC	MG/KG	CAC METALS										
CAC WET EXTRACTION	DATE	CAC WET EX										
COPPER	MG/L	CAC WET EX										
LEAD	MG/L	CAC WET EX										
MERCURY	MG/L	CAC WET EX										

TABLE 3.4-3

NAVSTA-SAN DIEGO
SITE 2 SOILS
INORGANIC COMPOUNDS

		SAMPLE NUMBER:	NS2-BH12-S01-5		NS2-BH12-S02-15		NS2-BH13-S01-10		NS2-BH13-S01-5		NS2-BH13-S02-5	
		SAMPLING DATE:	02/05/91		02/05/91		02/06/91		02/06/91		02/06/91	
		BORING:	BH12		BH12		BH13		BH13		BH13	
		SITE:	NS2		NS2		NS2		NS2		NS2	
		DEPTH:	5		15		10		5		5	
COMPOUND NAME	UNITS	TEST CODE	RESULT	QUALIFIER	RESULT	QUALIFIER	RESULT	QUALIFIER	RESULT	QUALIFIER	RESULT	QUALIFIER
ANTIMONY	MG/KG	CAC METALS										
ARSENIC	MG/KG	CAC METALS	2.0	B	0.48	B	0.87	B			2.2	
BARIUM	MG/KG	CAC METALS	178				19.8	B			135	
BERYLLIUM	MG/KG	CAC METALS	3.9								1.5	
CADMIUM	MG/KG	CAC METALS										
CHROMIUM	MG/KG	CAC METALS	24.8		2.4		2.7				16.2	
COBALT	MG/KG	CAC METALS	15.3		1.3	B	1.6	B			7.9	B
COPPER	MG/KG	CAC METALS										
LEAD	MG/KG	CAC METALS									6.2	
MERCURY	MG/KG	CAC METALS										
MOLYBDENUM	MG/KG	CAC METALS										
NICKEL	MG/KG	CAC METALS									7.3	B
SELENIUM	MG/KG	CAC METALS										
SILVER	MG/KG	CAC METALS										
THALLIUM	MG/KG	CAC METALS										
VANADIUM	MG/KG	CAC METALS	89.3		12.4		16.0				62.8	
ZINC	MG/KG	CAC METALS										
CAC WET EXTRACTION	DATE	CAC WET EX										
COPPER	MG/L	CAC WET EX										
LEAD	MG/L	CAC WET EX										
MERCURY	MG/L	CAC WET EX										

TABLE 3.4-3

NAVSTA-SAN DIEGO
SITE 2 SOILS
INORGANIC COMPOUNDS

		SAMPLE NUMBER:	NS2-BH14-S01-10		NS2-BH14-S02-15		NS2-BH15-S01-5		NS2-BH15-S02-15		NS2-MW10-S01-5	
		SAMPLING DATE:	02/07/91		02/07/91		02/06/91		02/06/91		02/04/91	
		BORING:	BH14		BH14		BH15		BH15		MW10	
		SITE:	NS2		NS2		NS2		NS2		NS2	
		DEPTH:	10		15		5		15		5	
COMPOUND NAME	UNITS	TEST CODE	RESULT	QUALIFIER	RESULT	QUALIFIER	RESULT	QUALIFIER	RESULT	QUALIFIER	RESULT	QUALIFIER
ANTIMONY	MG/KG	CAC METALS			6.9	B					8.1	B
ARSENIC	MG/KG	CAC METALS	1.2	B	1.7	B	1.5	B	1.7	B	5.8	
BARIUM	MG/KG	CAC METALS	25.0	B	163		32.6	B	112		96.3	
BERYLLIUM	MG/KG	CAC METALS	0.57	B	1.6		0.49	B	1.0	B	1.6	
CADMIUM	MG/KG	CAC METALS										
CHROMIUM	MG/KG	CAC METALS	4.9		17.1		8.9		9.4		54.7	
COBALT	MG/KG	CAC METALS	2.7	B	11.8	B	2.7	B	6.3	B	7.0	B
COPPER	MG/KG	CAC METALS					89.6				893	
LEAD	MG/KG	CAC METALS					40.4				286	
MERCURY	MG/KG	CAC METALS									4.5	
MOLYBDENUM	MG/KG	CAC METALS										
NICKEL	MG/KG	CAC METALS	2.1	B	8.2	B	5.4	B	4.1	B	19.3	
SELENIUM	MG/KG	CAC METALS									0.30	B
SILVER	MG/KG	CAC METALS									0.96	B
THALLIUM	MG/KG	CAC METALS									0.61	B
VANADIUM	MG/KG	CAC METALS	17.0		70.5		19.3		39.0		59.2	
ZINC	MG/KG	CAC METALS									781	
CAC WET EXTRACTION	DATE	CAC WET EX										
COPPER	MG/L	CAC WET EX									29.9	
LEAD	MG/L	CAC WET EX										
MERCURY	MG/L	CAC WET EX									0.0039	

TABLE 3.4-3

NAVSTA-SAN DIEGO
SITE 2 SOILS
INORGANIC COMPOUNDS

		SAMPLE NUMBER:	NS2-MW10-S02-10		NS2-MW10-S03-15		NS2-MW11-S01-5		NS2-MW11-S02-10		NS2-MW11-S03-15	
		SAMPLING DATE:	02/04/91		02/04/91		02/07/91		02/07/91		02/07/91	
		BORING:	MW10		MW10		MW11		MW11		MW11	
		SITE:	NS2		NS2		NS2		NS2		NS2	
		DEPTH:	10		15		5		10		15	
COMPOUND NAME	UNITS	TEST CODE	RESULT	QUALIFIER	RESULT	QUALIFIER	RESULT	QUALIFIER	RESULT	QUALIFIER	RESULT	QUALIFIER
ANTIMONY	MG/KG	CAC METALS							8.5	B	7.3	B
ARSENIC	MG/KG	CAC METALS	1.9	B			1.2	B	1.5	B	2.1	B
BARIUM	MG/KG	CAC METALS	39.5	B	66.4		55.7		67.8		107	
BERYLLIUM	MG/KG	CAC METALS	0.94	B	0.96	B	0.69	B	0.95	B	0.92	B
CADMIUM	MG/KG	CAC METALS										
CHROMIUM	MG/KG	CAC METALS	7.3		7.5		6.8		9.5		13.8	
COBALT	MG/KG	CAC METALS	6.0	B	4.4	B	4.2	B	5.6	B	8.8	B
COPPER	MG/KG	CAC METALS	17.6				3.5	B	7.0		10	
LEAD	MG/KG	CAC METALS	1.4				1.9		2.2		3.0	
MERCURY	MG/KG	CAC METALS										
MOLYBDENUM	MG/KG	CAC METALS							1.9	B	1.9	B
NICKEL	MG/KG	CAC METALS					3.9	B	5.3	B	7.1	B
SELENIUM	MG/KG	CAC METALS										
SILVER	MG/KG	CAC METALS	0.67	B					0.81	B	1.5	B
THALLIUM	MG/KG	CAC METALS	0.47	B								
VANADIUM	MG/KG	CAC METALS	21.2		28.8		24.3		32.8		48.1	
ZINC	MG/KG	CAC METALS	29.6				18.8		25.9		45.4	
CAC WET EXTRACTION	DATE	CAC WET EX										
COPPER	MG/L	CAC WET EX										
LEAD	MG/L	CAC WET EX										
MERCURY	MG/L	CAC WET EX										

TABLE 3.4-3

NAVSTA-SAN DIEGO
SITE 2 SOILS
INORGANIC COMPOUNDS

		SAMPLE NUMBER:	NS2-MW12-S01-5		NS2-MW12-S01-5-FD		NS2-MW12-S02-10		NS2-MW12-S03-15	
		SAMPLING DATE:	02/07/91		02/07/91		02/07/91		02/07/91	
		BORING:	MW12		MW12		MW12		MW12	
		SITE:	NS2		NS2		NS2		NS2	
		DEPTH:	5		5-FD		10		15	
COMPOUND NAME	UNITS	TEST CODE	RESULT	QUALIFIER	RESULT	QUALIFIER	RESULT	QUALIFIER	RESULT	QUALIFIER
ANTIMONY	MG/KG	CAC METALS			7.7	BJ			7.9	B
ARSENIC	MG/KG	CAC METALS	1.6	BJ	3.5	J	1.9	B	2.9	
BARIUM	MG/KG	CAC METALS			52.9		37.2	B	103	
BERYLLIUM	MG/KG	CAC METALS	0.20	B	0.80	B	0.43	B	0.98	B
CADMIUM	MG/KG	CAC METALS								
CHROMIUM	MG/KG	CAC METALS	3.3	J	19.1	J	6.2		14.6	
COBALT	MG/KG	CAC METALS	2.1	B	3.9	B	3.5	B	9.0	B
COPPER	MG/KG	CAC METALS			51.0					
LEAD	MG/KG	CAC METALS	0.64	B	97.3					
MERCURY	MG/KG	CAC METALS			0.21					
MOLYBDENUM	MG/KG	CAC METALS								
NICKEL	MG/KG	CAC METALS			6.1	B			6.6	B
SELENIUM	MG/KG	CAC METALS								
SILVER	MG/KG	CAC METALS								
THALLIUM	MG/KG	CAC METALS								
VANADIUM	MG/KG	CAC METALS			23.3		18.9		52.9	
ZINC	MG/KG	CAC METALS			132					
CAC WET EXTRACTION	DATE	CAC WET EX								
COPPER	MG/L	CAC WET EX								
LEAD	MG/L	CAC WET EX								
MERCURY	MG/L	CAC WET EX								

DATA QUALIFIER DEFINITIONS

For the purposes of this document the following code letters and associated definitions are provided.

A - Possible interference from polychlorinated diphenyl ethers.

B - The concentration reported is greater than the instrument detection limit(IDL) but less than the contract required detection limit(CRDL).

D - Compounds identified in an analysis at a secondary dilution.

J - The associated value is an estimated quantity.

R - The data are unusable. (Note: Analyte may or may not be present.)

U - The material was analyzed for, but was not detected above the level of the associated value. The associated value is either the sample quantitation limit or the sample detection limit.

UJ - The material was analyzed for, but was not detected. The associated value is an estimate and may be inaccurate or imprecise.

Z - Matrix interference, not a confirmed concentration.

TABLE 3.4-4

NAVSTA-SAN DIEGO
SITE 2 WATER
ORGANIC COMPOUNDS

		SAMPLE NUMBER:	NS2-MW02-GW1		NS2-MW03-GW1		NS2-MW04-GW1		NS2-MW05-GW1		NS2-MW09-GW1	
		SAMPLING DATE:	02/14/91		02/15/91		02/12/91		02/15/91		02/15/91	
		BORING:	MW02		MW03		MW04		MW05		MW09	
		SITE:	NS2		NS2		NS2		NS2		NS2	
		DEPTH:	NS2-MW02-GW1		NS2-MW03-GW1		NS2-MW04-GW1		NS2-MW05-GW1		NS2-MW09-GW1	
COMPOUND NAME	UNITS	TEST CODE	RESULT	QUALIFIER	RESULT	QUALIFIER	RESULT	QUALIFIER	RESULT	QUALIFIER	RESULT	QUALIFIER
CARBON DISULFIDE	UG/L	VOA										
BENZOIC ACID	UG/L	BNA	2	J	1	J			2	J	1	J
PHENOL	UG/L	BNA										
PCB-1254	UG/L	PEST / PCB										
PCB-1260	UG/L	PEST / PCB										
TOXAPHENE	UG/L	PEST / PCB										
DIESEL	UG/L	TPHC							410			
HYDRAULIC OIL	UG/L	TPHC							280			
MOTOR OIL	UG/L	TPHC					870	Z	2080	Z		

TABLE 3.4-4

NAVSTA-SAN DIEGO
SITE 2 WATER
ORGANIC COMPOUNDS

		SAMPLE NUMBER:	NS2-MW10-GW1		NS2-MW11-GW1		NS2-MW12-GW1		NS2-MW12-GW1-FD	
		SAMPLING DATE:	02/13/91		02/13/91		02/12/91		02/12/91	
		BORING:	MW10		MW11		MW12		MW12	
		SITE:	NS2		NS2		NS2		NS2	
		DEPTH:	NS2-MW10-GW1		NS2-MW11-GW1		NS2-MW12-GW1		FD	
COMPOUND NAME	UNITS	TEST CODE	RESULT	QUALIFIER	RESULT	QUALIFIER	RESULT	QUALIFIER	RESULT	QUALIFIER
CARBON DISULFIDE	UG/L	VOA					5		1	J
BENZOIC ACID	UG/L	BNA	1	J						
PHENOL	UG/L	BNA	1	J						
PCB-1254	UG/L	PEST / PCB	1							
PCB-1260	UG/L	PEST / PCB	1							
TOXAPHENE	UG/L	PEST / PCB			1					
DIESEL	UG/L	TPHC								
HYDRAULIC OIL	UG/L	TPHC								
MOTOR OIL	UG/L	TPHC	1730	Z	720	Z			680	Z

DATA QUALIFIER DEFINITIONS

For the purposes of this document the following code letters and associated definitions are provided.

A - Possible interference from polychlorinated diphenyl ethers.

B - The concentration reported is greater than the instrument detection limit(IDL) but less than the contract required detection limit(CRDL).

D - Compounds identified in an analysis at a secondary dilution.

J - The associated value is an estimated quantity.

R - The data are unusable. (Note: Analyte may or may not be present.)

U - The material was analyzed for, but was not detected above the level of the associated value. The associated value is either the sample quantitation limit or the sample detection limit.

UJ - The material was analyzed for, but was not detected. The associated value is an estimate and may be inaccurate or imprecise.

Z - Matrix interference, not a confirmed concentration.

B

TABLE 3.4-5

NAVSTA-SAN DIEGO
SITE 2 WATER
INORGANIC COMPOUNDS

		SAMPLE NUMBER:	NS2-MW02-GW1		NS2-MW03-GW1		NS2-MW04-GW1		NS2-MW05-GW1		NS2-MW09-GW1	
		SAMPLING DATE:	02/14/91		02/15/91		02/12/91		02/15/91		02/15/91	
		BORING:	MW02		MW03		MW04		MW05		MW09	
		SITE:	NS2		NS2		NS2		NS2		NS2	
		DEPTH:	NS2-MW02-GW1		NS2-MW03-GW1		NS2-MW04-GW1		NS2-MW05-GW1		NS2-MW09-GW1	
COMPOUND NAME	UNITS	TEST CODE	RESULT	QUALIFIER	RESULT	QUALIFIER	RESULT	QUALIFIER	RESULT	QUALIFIER	RESULT	QUALIFIER
ANTIMONY	UG/L	CAC METALS	22.3	B	27.2	B	38.7	B	61.0			
ARSENIC	UG/L	CAC METALS	2.4	B	2.4	B					1.3	B
BARIUM	UG/L	CAC METALS	109	B	41.2	B	77.5	B	76.1	B	28.2	B
CADMIUM	UG/L	CAC METALS					11.1					
COPPER	UG/L	CAC METALS										
LEAD	UG/L	CAC METALS										
MOLYBDENUM	UG/L	CAC METALS	44.9	B	17.7	B	8.8	B	21.2	BR	13.1	B
SELENIUM	UG/L	CAC METALS							12.0	BR		
SILVER	UG/L	CAC METALS	9.1	B	5.5	B					3.6	B
THALLIUM	UG/L	CAC METALS			1.3	B						
VANADIUM	UG/L	CAC METALS	29.5	B	48.8	B	45.9	B	56.0		31.9	B
ZINC	UG/L	CAC METALS					38.1					

TABLE 3.4-5

NAVSTA-SAN DIEGO
SITE 2 WATER
INORGANIC COMPOUNDS

		SAMPLE NUMBER:	NS2-MW10-GW1		NS2-MW11-GW1		NS2-MW12-GW1		NS2-MW12-GW1-FD	
		SAMPLING DATE:	02/13/91		02/13/91		02/12/91		02/12/91	
		BORING:	MW10		MW11		MW12		MW12	
		SITE:	NS2		NS2		NS2		NS2	
		DEPTH:	NS2-MW10-GW1		NS2-MW11-GW1		NS2-MW12-GW1		FD	
COMPOUND NAME	UNITS	TEST CODE	RESULT	QUALIFIER	RESULT	QUALIFIER	RESULT	QUALIFIER	RESULT	QUALIFIER
ANTIMONY	UG/L	CAC METALS	39.2	B	25.1	B			21.5	B
ARSENIC	UG/L	CAC METALS	5.7	B			3.8	B	2.3	B
BARIUM	UG/L	CAC METALS	81.4	B			26.7	B	28.4	B
CADMIUM	UG/L	CAC METALS								
COPPER	UG/L	CAC METALS							22.0	B
LEAD	UG/L	CAC METALS							1.1	B
MOLYBDENUM	UG/L	CAC METALS	33.0	B	20.8	B	18.4	B	18.4	B
SELENIUM	UG/L	CAC METALS								
SILVER	UG/L	CAC METALS	9.0	B	6.6	B	7.6	B		
THALLIUM	UG/L	CAC METALS					6.8	B		
VANADIUM	UG/L	CAC METALS					14.5	B	17.1	B
ZINC	UG/L	CAC METALS					215		226	

DATA QUALIFIER DEFINITIONS

For the purposes of this document the following code letters and associated definitions are provided.

A - Possible interference from polychlorinated diphenyl ethers.

B - The concentration reported is greater than the instrument detection limit(IDL) but less than the contract required detection limit(CRDL).

D - Compounds identified in an analysis at a secondary dilution.

J - The associated value is an estimated quantity.

R - The data are unusable. (Note: Analyte may or may not be present.)

U - The material was analyzed for, but was not detected above the level of the associated value. The associated value is either the sample quantitation limit or the sample detection limit.

UJ - The material was analyzed for, but was not detected. The associated value is an estimate and may be inaccurate or imprecise.

Z - Matrix interference, not a confirmed concentration.

VOCs. A total of nine VOCs were detected in soil samples: 1,1,1-trichloroethane, 2-butanone, acetone, carbon disulfide, ethyl benzene, methylene chloride, toluene, trichloroethene, and xylenes (total). All soil samples contained at least one VOC, except samples from BH14 and MW12 (background). This result indicates that past activities at the site have caused a wide distribution of contamination across the site.

Two of the compounds most often found at elevated concentration in the soils are acetone and toluene. Acetone was detected in a total of 15 samples from eleven borings at concentrations ranging from 15 to 1,200 µg/kg. The maximum concentration was detected in BH12 from a sample collected at a depth of 5 feet. Toluene was detected in a total of 18 samples from 11 borings at concentrations ranging from 2 to 4,400 µg/kg. The maximum concentration was detected in a soil sample from BH02 at a depth of 15 feet. Toluene concentrations greater than 100 µg/kg were detected in BH01, 02, 03, and 04, which are all located in the southwestern portion of the site. In addition, it was observed that the concentrations increased with depth in all four boreholes.

Ethyl benzene was detected in five samples at concentrations ranging from 14 to 710 µg/kg. This compound was detected in BH01, 02, 03, 04, and MW10 from samples collected from depths of 10 to 15 feet.

Comparing the results of the TPH diesel fraction, toluene, and ethyl benzene indicates that a probable source of contamination may be a leaking underground storage tank.

Other VOCs found in the soils were detected in the same samples as those containing acetone and toluene.

Semivolatile Organic Compounds (BNA). A total of 25 BNAs were detected in the soil samples. Three BNA compounds most often detected are: 2-methylnaphthalene, naphthalene, and phenanthrene. The compound 2-methylnaphthalene was detected in a total of 7 samples from BH01-BH04, BH08, and MW10 at concentrations ranging from 2,900 to 67,000 µg/kg. The maximum concentration was detected in MW10 from a sample collected at a depth of 15 feet. Naphthalene was detected in a total of 8 samples from BH01-BH04, BH08, and MW10 at concentrations ranging from 1,000 to 25,000 µg/kg. The maximum concentration was detected in MW10 from a sample collected at a depth of 15 feet. Phenanthrene was detected in a total of 9 samples from BH01-BH04, BH15, and MW10 at concentrations ranging from

54 to 13,000 µg/kg. The maximum concentration was detected in BH04 from a sample collected at a depth of 5 feet. Other detected BNA compounds are found at the same locations as the three compounds discussed above. In addition, other BNA compounds were detected in the background boring sample from MW12.

Pesticide/PCBs. Two pesticide compounds 4,4-DDD, and 4,4-DDT were detected only once at concentrations of 20 and 140 µg/kg, respectively. 4,4-DDD was detected in a soil sample from MW12, and 4,4-DDT was detected in a soil sample from MW10.

Aroclor-1260 was detected in two samples from BH02 and one sample from BH15 at concentrations of 340, 408, and 560 µg/kg, respectively.

Dioxin and Dibenzofurans. Five soil samples were collected for analyses for dioxin and dibenzofurans in accordance with direction given by the California Department of Health Services Toxic Substance Control Program. The results of the detectable compounds are reported on Table 3.4-2.

Metals. All soil samples collected from the 18 borings were submitted for inorganic analyses. The results of detectable compounds are reported on Table 3.4-3. Comparing the analytical results of soil samples collected within the site boundary with the sample results from the background boring MW12 (Table 3.3-1), the following observations are made:

- Inorganic compounds exceeding background concentrations were observed to occur more frequently in samples collected from BH01, 02, 04, 05, 12, 13, 14, and MW10.

- In the southwestern portion of the site, the inorganic compounds concentrations that are greater than background concentration occur more frequently at a 5-foot depth in samples collected from borings BH04, 05, and MW10 at a 15-foot depth in samples collected from borings BH01 and BH02.

- Samples collected from the interior of the site from BH12 and BH13 have inorganic compounds exceeding background concentrations at the 5-foot depth.

- The results of samples collected from BH14 indicate that inorganic compounds exceed background concentrations at a depth greater than 10 feet.

- Most of the inorganic compounds detected in samples from BH06, 07, 08, 09, 10, 11, 15, and MW11 were below the background concentrations. The excep-

tions are beryllium from BH08 and BH09; copper from BH10 and BH15; and antimony, barium, and molybdenum from MW11.

In addition to the CAC TTLC metals analyses, waste extraction test (WET) analyses were conducted on samples that exceeded the 10 times Soluble Threshold Limit Concentration (STLC). The results of these analyses are also presented in Table 3.4-3.

3.4.2.2 Groundwater Data

Eight wells (MW02 to MW05, MW09 to MW12) were sampled at Site 2, from which a total of nine water samples were collected (including one field duplicate). The samples were analyzed for TPH, VOCs, BNAs, pesticides, PCBs, and CAC metals. Tables 3.4-4 and 3.4-5 contain a complete list of all water samples collected along with a summary of the detectable compounds. MW12 is the background well location outside of the Site 2 boundary. A complete list of all compounds analyzed is provided in Appendix F.

TPHs. TPHs were analyzed for the following fractions: diesel, hydraulic oil, motor oil, and Stoddard solvents. The motor oil fraction was found to be the most prevalent and was detected in wells MW04, 05, 10, 11, and 12 at concentrations ranging from 680 to 2,080 µg/L. Diesel and hydraulic oil were the only other TPH fractions detected, and these only occurred in the water sample from MW05.

VOCs. Only one VOC, carbon disulfide, was detected in the Site 2 water samples. This compound was detected in the background monitoring well MW12. Comparing this result with the TPH results indicates that MW12 may not be representative of a background condition.

BNAs. Two BNA compounds, benzoic acid and phenol, were detected as estimated values in the Site 2 water samples. Phenol was detected in a sample from MW10 and benzoic acid was detected in MW02, 03, 05, 09, and 10.

Pesticide/PCBs. One pesticide compound, Toxaphene, was detected at a concentration of 1 µg/L in a water sample from MW11.

Two PCB compounds, Aroclor-1254 and Aroclor-1260, were detected a concentrations of 1 µg/L in a water sample from MW10.

Metals. All water samples collected from the eight wells were submitted for inorganic analyses. The results of detectable compounds are reported on Table 3.4-5. Comparing the analytical results of the water samples collected within the site boundary with the sample results from the background boring MW12 (Table 3.3-4), the following observations are made:

- Inorganic compounds exceeding background concentrations were observed to occur more frequently in samples collected from MW02, 03, 04, 05, 10.
- Beryllium and cobalt were not detected in any of the samples.
- Most of the inorganic compounds detected in samples from MW09 and MW11 were below the background concentrations. The exceptions are vanadium from MW09; and antimony and molybdenum from MW11.

In addition to the CAC TTLC metals analyses, a WET analyses was conducted on samples that exceeded 10 times STLC. The results of these analyses are also presented in Table 3.4-5.

3.4.3 Site 3 - Salvage Yard

During the verification step field investigation, 19 soil borings were installed to depths between 11 and 26 feet. Forty-five soil samples were collected for analysis. All samples were analyzed for lead, silver, mercury, VOCs, pesticides, and PCBs. Twenty-two samples were analyzed for semivolatile organic compounds. Fourteen samples were analyzed for TPH (diesel). Five of the borings were converted to monitoring wells. The findings are given in the Verification Step Report (IT, 1988) and are summarized here. The results of groundwater analysis for samples collected during this SI are given in Tables 3.4-6 and 3.4-7.

3.4.3.1 Soils Data

VOCs. Of the VOCs analyzed for, only acetone is found in 26 soil samples across the site. Ethyl benzene, xylene, and disulfide are found in two samples ranging from 0.03 to 2.40 mg/kg. The largest suite of VOCs is found in BH10-S01-3.5, which exhibits trichloroethene, benzene, 4-methyl, 2-pentanone, tetrachloroethene, toluene, chlorobenzene, ethyl benzene, and xylenes.

BNAs. Fewer samples were submitted for analysis for BNAs than for VOCs. Bis(2-ethylhexyl)phthalate is the most commonly reported BNA, occurring five times at concentrations from 7.8 to 3.1 mg/kg. Soil sample BH10-S01-5 exhibits the largest suite of BNA including

TABLE 3.4-6

NAVSTA-SAN DIEGO
SITE 3 WATER
ORGANIC COMPOUNDS

		SAMPLE NUMBER:	NS3-MW3-GW1		NS3-MW4-GW1		NS3-MW5-GW1	
		SAMPLING DATE:	02/14/91		02/14/91		02/13/91	
		BORING:	MW3		MW4		MW5	
		SITE:	NS3		NS3		NS3	
		DEPTH:	NS3-MW3-GW1		NS3-MW4-GW1		NS3-MW5-GW1	
COMPOUND NAME	UNITS	TEST CODE	RESULT	QUALIFIER	RESULT	QUALIFIER	RESULT	QUALIFIER
1,1-DICHLOROETHANE	UG/L	VOA			6			
1,2-DICHLOROETHENE (TOTAL)	UG/L	VOA			2	J		
CARBON DISULFIDE	UG/L	VOA	6	J	8	J		
DIESEL	UG/L	TPHC			260			

DATA QUALIFIER DEFINITIONS

For the purposes of this document the following code letters and associated definitions are provided.

A - Possible interference from polychlorinated diphenyl ethers.

B - The concentration reported is greater than the instrument detection limit(IDL) but less than the contract required detection limit(CRDL).

D - Compounds identified in an analysis at a secondary dilution.

J - The associated value is an estimated quantity.

R - The data are unusable. (Note: Analyte may or may not be present.)

U - The material was analyzed for, but was not detected above the level of the associated value. The associated value is either the sample quantitation limit or the sample detection limit.

UJ - The material was analyzed for, but was not detected. The associated value is an estimate and may be inaccurate or imprecise.

Z - Matrix interference, not a confirmed concentration.

TABLE 3.4-7

NAVSTA-SAN DIEGO
SITE 3 WATER
INORGANIC COMPOUNDS

		SAMPLE NUMBER:	NS3-MW3-GW1		NS3-MW4-GW1		NS3-MW5-GW1	
		SAMPLING DATE:	02/14/91		02/14/91		02/13/91	
		BORING:	MW3		MW4		MW5	
		SITE:	NS3		NS3		NS3	
		DEPTH:	NS3-MW3-GW1		NS3-MW4-GW1		NS3-MW5-GW1	
COMPOUND NAME	UNITS	TEST CODE	RESULT	QUALIFIER	RESULT	QUALIFIER	RESULT	QUALIFIER
ANTIMONY	UG/L	CAC METALS	66.3		68.1		69.5	
ARSENIC	UG/L	CAC METALS	13.0	B			5.1	BJ
BARIUM	UG/L	CAC METALS	69.3	B	95.6	B	72.7	B
CADMIUM	UG/L	CAC METALS			13.4			
CHROMIUM	UG/L	CAC METALS			5.1	B		
COBALT	UG/L	CAC METALS			5.2	B		
MOLYBDENUM	UG/L	CAC METALS	10.4	B	7.7	B	22.8	B
NICKEL	UG/L	CAC METALS	13.7	B				
VANADIUM	UG/L	CAC METALS			60.8			

DATA QUALIFIER DEFINITIONS

For the purposes of this document the following code letters and associated definitions are provided.

A - Possible interference from polychlorinated diphenyl ethers.

B - The concentration reported is greater than the instrument detection limit(IDL) but less than the contract required detection limit(CRDL).

D - Compounds identified in an analysis at a secondary dilution.

J - The associated value is an estimated quantity.

R - The data are unusable. (Note: Analyte may or may not be present.)

U - The material was analyzed for, but was not detected above the level of the associated value. The associated value is either the sample quantitation limit or the sample detection limit.

UJ - The material was analyzed for, but was not detected. The associated value is an estimate and may be inaccurate or imprecise.

Z - Matrix interference, not a confirmed concentration.

1,4 dichlorobenzene; 1,2 dichlorobenzene; 4-methylphenol; 2,4-Dimethylphenol; 2-methylnaphthalene; and bis(2-ethylhexyl)phthalate.

TPHs. Twenty-two samples were analyzed for TPH. Twelve samples contained greater than 10 ppm TPH, and three contained greater than 100 mg/kg TPH.

Metals. Soils samples were analyzed for lead, mercury, and silver only. Soil results were compared to the levels of metals found in the background soil samples collected as part of the current investigation. Background data for silver was not available; therefore, only mercury and lead could be evaluated. Lead concentrations are elevated in seven samples with an overall range from 0 to 5480 mg/kg. Mercury concentrations are elevated in eight samples with an overall range from 0 to 0.92 mg/kg. BH10-S01-3.5 exhibits the highest lead, mercury, and silver concentrations.

Pesticides and PCBs. Endosulfan is the only pesticide reported from soil samples, occurring in BH04-S01-4 (0.13 mg/kg). PCB occurs in only one sample, BH10-S01-3.5 (187 mg/kg; Aroclor-1254).

3.4.3.2 Groundwater Data

Groundwater samples were collected from five monitoring wells and were analyzed for the same parameters as the soils. Diesel was the only contaminant found and was found in only one groundwater sample, MW02-GW-1.

3.4.4 Site 4 - DPDO Storage Yard

At the DPDO Storage Yard, a total of 12 soil borings were installed to depths between 10 and 25 feet; four of these borings were converted to monitoring wells. Sample locations are shown in Figure 3-5. A total of 36 soil samples and 5 groundwater samples were submitted for analysis. Soils were analyzed for VOC, BNA, TPH, inorganic analytes, pesticides, and PCBs. The levels of detected analytes are listed for each sample in Table 3.4-8 through 3.4-11. All values in the tables have been blank corrected and validated.

3.4.4.1 Soils Data

Concentrations of all organic compounds found is soils at Site 4 are given in Table 3.4-8.

TABLE 3.4-8

NAVSTA-SAN DIEGO
SITE 4 SOILS
ORGANIC COMPOUNDS

		SAMPLE NUMBER:	NS4-BH1-S01-5		NS4-BH1-S02-10		NS4-BH2-S01-5		NS4-BH2-S02-15		NS4-BH2-S03-5 FD	
		SAMPLING DATE:	01/24/91		01/24/91		01/24/91		01/24/91		01/24/91	
		BORING:	BH1		BH1		BH2		BH2		BH2	
		SITE:	NS4		NS4		NS4		NS4		NS4	
		DEPTH:	5		10		5		15		5 FD	
COMPOUND NAME	UNITS	TEST CODE	RESULT	QUALIFIER	RESULT	QUALIFIER	RESULT	QUALIFIER	RESULT	QUALIFIER	RESULT	QUALIFIER
ACENAPHTHYLENE	UG/KG	BNA										
ANTHRACENE	UG/KG	BNA										
BENZO(A)ANTHRACENE	UG/KG	BNA	110	J								
BENZO(A)PYRENE	UG/KG	BNA	740									
BENZO(B)FLUORANTHENE	UG/KG	BNA	680									
BENZO(G,H,I)PERYLENE	UG/KG	BNA	320	J								
BENZO(K)FLUORANTHENE	UG/KG	BNA	490									
BENZOIC ACID	UG/KG	BNA					43	J				
BIS(2-ETHYLHEXYL)PHTHALATE	UG/KG	BNA	1200				65	J				
CHRYSENE	UG/KG	BNA	320	J								
DIBENZ(A,H)ANTHRACENE	UG/KG	BNA	88	J								
DIETHYLPHTHALATE	UG/KG	BNA							78	J		
FLUORANTHENE	UG/KG	BNA	140	J								
INDENO(1,2,3-C,D)PYRENE	UG/KG	BNA	280	J								
PHENANTHRENE	UG/KG	BNA										
PYRENE	UG/KG	BNA	220	J								
4,4'-DDE	UG/KG	PEST / PCB										
4,4'-DDT	UG/KG	PEST / PCB										
ALPHA-CHLORDANE	UG/KG	PEST / PCB										
GAMMA-CHLORDANE	UG/KG	PEST / PCB										
DIESEL	MG/KG	TPHC	20		40							
2-BUTANONE	UG/KG	VOA									10	J
ACETONE	UG/KG	VOA			39						51	
CARBON DISULFIDE	UG/KG	VOA										
TOLUENE	UG/KG	VOA										
XYLENES (TOTAL)	UG/KG	VOA										

TABLE 3.4-8

NAVSTA-SAN DIEGO
SITE 4 SOILS
ORGANIC COMPOUNDS

		SAMPLE NUMBER:	NS4-BH3-S01-5		NS4-BH3-S02-10		NS4-BH4-S01-5		NS4-BH4-S02-15		NS4-BH5-S01-10	
		SAMPLING DATE:	01/25/91		01/25/91		01/25/91		01/25/91		01/29/91	
		BORING:	BH3		BH3		BH4		BH4		BH5	
		SITE:	NS4		NS4		NS4		NS4		NS4	
		DEPTH:	5		10		5		15		10	
COMPOUND NAME	UNITS	TEST CODE	RESULT	QUALIFIER	RESULT	QUALIFIER	RESULT	QUALIFIER	RESULT	QUALIFIER	RESULT	QUALIFIER
ACENAPHTHYLENE	UG/KG	BNA										
ANTHRACENE	UG/KG	BNA										
BENZO(A)ANTHRACENE	UG/KG	BNA										
BENZO(A)PYRENE	UG/KG	BNA										
BENZO(B)FLUORANTHENE	UG/KG	BNA										
BENZO(G,H,I)PERYLENE	UG/KG	BNA										
BENZO(K)FLUORANTHENE	UG/KG	BNA										
BENZOIC ACID	UG/KG	BNA										
BIS(2-ETHYLHEXYL)PHTHALATE	UG/KG	BNA										
CHRYSENE	UG/KG	BNA										
DIBENZ(A,H)ANTHRACENE	UG/KG	BNA										
DIETHYLPHTHALATE	UG/KG	BNA										
FLUORANTHENE	UG/KG	BNA										
INDENO(1,2,3-C,D)PYRENE	UG/KG	BNA										
PHENANTHRENE	UG/KG	BNA										
PYRENE	UG/KG	BNA										
4,4'-DDE	UG/KG	PEST / PCB										
4,4'-DDT	UG/KG	PEST / PCB										
ALPHA-CHLORDANE	UG/KG	PEST / PCB										
GAMMA-CHLORDANE	UG/KG	PEST / PCB										
DIESEL	MG/KG	TPHC	20									
2-BUTANONE	UG/KG	VOA										
ACETONE	UG/KG	VOA										
CARBON DISULFIDE	UG/KG	VOA							250		19	
TOLUENE	UG/KG	VOA										
XYLENES (TOTAL)	UG/KG	VOA										

TABLE 3.4-8

NAVSTA-SAN DIEGO
SITE 4 SOILS
ORGANIC COMPOUNDS

		SAMPLE NUMBER:	NS4-BH5-S02-15		NS4-BH6-S01-5		NS4-BH6-S02-10		NS4-BH6-S03-5-FD		NS4-BH6-S06-15	
		SAMPLING DATE:	01/29/91		01/28/91		01/28/91		01/28/91		01/28/91	
		BORING:	BH5		BH6		BH6		BH6		BH6	
		SITE:	NS4		NS4		NS4		NS4		NS4	
		DEPTH:	15		5		10		5-FD		15	
COMPOUND NAME	UNITS	TEST CODE	RESULT	QUALIFIER	RESULT	QUALIFIER	RESULT	QUALIFIER	RESULT	QUALIFIER	RESULT	QUALIFIER
ACENAPHTHYLENE	UG/KG	BNA										
ANTHRACENE	UG/KG	BNA										
BENZO(A)ANTHRACENE	UG/KG	BNA										
BENZO(A)PYRENE	UG/KG	BNA										
BENZO(B)FLUORANTHENE	UG/KG	BNA										
BENZO(G,H,I)PERYLENE	UG/KG	BNA										
BENZO(K)FLUORANTHENE	UG/KG	BNA										
BENZOIC ACID	UG/KG	BNA										
BIS(2-ETHYLHEXYL)PHTHALATE	UG/KG	BNA										
CHRYSENE	UG/KG	BNA										
DIBENZ(A,H)ANTHRACENE	UG/KG	BNA										
DIETHYLPHTHALATE	UG/KG	BNA										
FLUORANTHENE	UG/KG	BNA										
INDENO(1,2,3-C,D)PYRENE	UG/KG	BNA										
PHENANTHRENE	UG/KG	BNA										
PYRENE	UG/KG	BNA										
4,4'-DDE	UG/KG	PEST / PCB										
4,4'-DDT	UG/KG	PEST / PCB										
ALPHA-CHLORDANE	UG/KG	PEST / PCB										
GAMMA-CHLORDANE	UG/KG	PEST / PCB										
DIESEL	MG/KG	TPHC										
2-BUTANONE	UG/KG	VOA										
ACETONE	UG/KG	VOA										
CARBON DISULFIDE	UG/KG	VOA	60								370	
TOLUENE	UG/KG	VOA										
XYLENES (TOTAL)	UG/KG	VOA										

TABLE 3.4-8

NAVSTA-SAN DIEGO
SITE 4 SOILS
ORGANIC COMPOUNDS

		SAMPLE NUMBER:	NS4-BH7-S01-10		NS4-BH7-S02-15		NS4-BH8-S01-5		NS4-BH8-S02-10		NS4-BH8-S03-15	
		SAMPLING DATE:	01/28/91		01/28/91		01/28/91		01/28/91		01/28/91	
		BORING:	BH7		BH7		BH8		BH8		BH8	
		SITE:	NS4		NS4		NS4		NS4		NS4	
		DEPTH:	10		15		5		10		15	
COMPOUND NAME	UNITS	TEST CODE	RESULT	QUALIFIER	RESULT	QUALIFIER	RESULT	QUALIFIER	RESULT	QUALIFIER	RESULT	QUALIFIER
ACENAPHTHYLENE	UG/KG	BNA										
ANTHRACENE	UG/KG	BNA										
BENZO(A)ANTHRACENE	UG/KG	BNA										
BENZO(A)PYRENE	UG/KG	BNA										
BENZO(B)FLUORANTHENE	UG/KG	BNA										
BENZO(G,H,I)PERYLENE	UG/KG	BNA										
BENZO(K)FLUORANTHENE	UG/KG	BNA										
BENZOIC ACID	UG/KG	BNA										
BIS(2-ETHYLHEXYL)PHTHALATE	UG/KG	BNA										
CHRYSENE	UG/KG	BNA										
DIBENZ(A,H)ANTHRACENE	UG/KG	BNA										
DIETHYLPHTHALATE	UG/KG	BNA										
FLUORANTHENE	UG/KG	BNA	120	J								
INDENO(1,2,3-C,D)PYRENE	UG/KG	BNA										
PHENANTHRENE	UG/KG	BNA										
PYRENE	UG/KG	BNA	100	J								
4,4'-DDE	UG/KG	PEST / PCB										
4,4'-DDT	UG/KG	PEST / PCB										
ALPHA-CHLORDANE	UG/KG	PEST / PCB										
GAMMA-CHLORDANE	UG/KG	PEST / PCB										
DIESEL	MG/KG	TPHC										
2-BUTANONE	UG/KG	VOA							10	J		
ACETONE	UG/KG	VOA										
CARBON DISULFIDE	UG/KG	VOA	24		17				57		45	
TOLUENE	UG/KG	VOA										
XYLENES (TOTAL)	UG/KG	VOA										

TABLE 3.4-8

NAVSTA-SAN DIEGO
SITE 4 SOILS
ORGANIC COMPOUNDS

		SAMPLE NUMBER:	NS4-MW1-S01-10		NS4-MW1-S02-15		NS4-MW2-S01-5		NS4-MW2-S02-10		NS4-MW2-S03-15	
		SAMPLING DATE:	01/29/91		01/29/91		01/28/91		01/28/91		01/28/91	
		BORING:	MW1		MW1		MW2		MW2		MW2	
		SITE:	NS4		NS4		NS4		NS4		NS4	
		DEPTH:	10		15		5		10		15	
COMPOUND NAME	UNITS	TEST CODE	RESULT	QUALIFIER	RESULT	QUALIFIER	RESULT	QUALIFIER	RESULT	QUALIFIER	RESULT	QUALIFIER
ACENAPHTHYLENE	UG/KG	BNA										
ANTHRACENE	UG/KG	BNA										
BENZO(A)ANTHRACENE	UG/KG	BNA										
BENZO(A)PYRENE	UG/KG	BNA										
BENZO(B)FLUORANTHENE	UG/KG	BNA										
BENZO(G,H,I)PERYLENE	UG/KG	BNA										
BENZO(K)FLUORANTHENE	UG/KG	BNA										
BENZOIC ACID	UG/KG	BNA										
BIS(2-ETHYL"EXYL)PHTHALATE	UG/KG	BNA										
CHRYSENE	UG/KG	BNA										
DIBENZ(A,H)ANTHRACENE	UG/KG	BNA										
DIETHYLPHTHALATE	UG/KG	BNA										
FLUORANTHENE	UG/KG	BNA										
INDENO(1,2,3-C,D)PYRENE	UG/KG	BNA										
PHENANTHRENE	UG/KG	BNA										
PYRENE	UG/KG	BNA										
4,4'-DDE	UG/KG	PEST / PCB										
4,4'-DDT	UG/KG	PEST / PCB										
ALPHA-CHLORDANE	UG/KG	PEST / PCB										
GAMMA-CHLORDANE	UG/KG	PEST / PCB										
DIESEL	MG/KG	TPHC										
2-BUTANONE	UG/KG	VOA										
ACETONE	UG/KG	VOA			11	J						
CARBON DISULFIDE	UG/KG	VOA									55	
TOLUENE	UG/KG	VOA					3	J				
XYLENES (TOTAL)	UG/KG	VOA					3	J				

TABLE 3.4-8

NAVSTA-SAN DIEGO
SITE 4 SOILS
ORGANIC COMPOUNDS

		SAMPLE NUMBER:	NS4-MW3-S01-5		NS4-MW3-S02-10		NS4-MW3-S02-10-FD		NS4-MW4-S01-5		NS4-MW4-S02-10	
		SAMPLING DATE:	01/28/91		01/28/91		01/28/91		01/29/91		01/29/91	
		BORING:	MW3		MW3		MW3		MW4		MW4	
		SITE:	NS4		NS4		NS4		NS4		NS4	
		DEPTH:	5		10		10-FD		5		10	
COMPOUND NAME	UNITS	TEST CODE	RESULT	QUALIFIER	RESULT	QUALIFIER	RESULT	QUALIFIER	RESULT	QUALIFIER	RESULT	QUALIFIER
ACENAPHTHYLENE	UG/KG	BNA										
ANTHRACENE	UG/KG	BNA										
BENZO(A)ANTHRACENE	UG/KG	BNA										
BENZO(A)PYRENE	UG/KG	BNA										
BENZO(B)FLUORANTHENE	UG/KG	BNA										
BENZO(G,H,I)PERYLENE	UG/KG	BNA										
BENZO(K)FLUORANTHENE	UG/KG	BNA										
BENZOIC ACID	UG/KG	BNA										
BIS(2-ETHYLHEXYL)PHTHALATE	UG/KG	BNA										
CHRYSENE	UG/KG	BNA										
DIBENZ(A,H)ANTHRACENE	UG/KG	BNA										
DIETHYLPHTHALATE	UG/KG	BNA	91000									
FLUORANTHENE	UG/KG	BNA										
INDENO(1,2,3-C,D)PYRENE	UG/KG	BNA										
PHENANTHRENE	UG/KG	BNA										
PYRENE	UG/KG	BNA										
4,4'-DDE	UG/KG	PEST / PCB	25	J								
4,4'-DDT	UG/KG	PEST / PCB	71	J								
ALPHA-CHLORDANE	UG/KG	PEST / PCB										
GAMMA-CHLORDANE	UG/KG	PEST / PCB										
DIESEL	MG/KG	TPHC										
2-BUTANONE	UG/KG	VOA										
ACETONE	UG/KG	VOA										
CARBON DISULFIDE	UG/KG	VOA			1	J					11	
TOLUENE	UG/KG	VOA										
XYLENES (TOTAL)	UG/KG	VOA										

TABLE 3.4-8

NAVSTA-SAN DIEGO
SITE 4 SOILS
ORGANIC COMPOUNDS

		SAMPLE NUMBER:	NS4-MW4-S03-15		NS4-MW4-S04-20		NS4-SS1-S01		NS4-SS2-S01		NS4-SS3-S01	
		SAMPLING DATE:	01/29/91		01/29/91		02/12/91		02/12/91		02/12/91	
		BORING:	MW4		MW4		SS1		SS2		SS3	
		SITE:	NS4		NS4		NS4		NS4		NS4	
		DEPTH:	15		20		NS4-SS1-S01		NS4-SS2-S01		NS4-SS3-S01	
COMPOUND NAME	UNITS	TEST CODE	RESULT	QUALIFIER	RESULT	QUALIFIER	RESULT	QUALIFIER	RESULT	QUALIFIER	RESULT	QUALIFIER
ACENAPHTHYLENE	UG/KG	BNA					80	J				
ANTHRACENE	UG/KG	BNA					51	J				
BENZO(A)ANTHRACENE	UG/KG	BNA					220	J				
BENZO(A)PYRENE	UG/KG	BNA					310	J	390	J		
BENZO(B)FLUORANTHENE	UG/KG	BNA					360	J				
BENZO(G,H,I)PERYLENE	UG/KG	BNA					380	J	150	J		
BENZO(K)FLUORANTHENE	UG/KG	BNA					450					
BENZOIC ACID	UG/KG	BNA					93	J	160	J		
BIS(2-ETHYLHEXYL)PHTHALATE	UG/KG	BNA					420	J	2600			
CHRYSENE	UG/KG	BNA					460		420	J		
DIBENZ(A,H)ANTHRACENE	UG/KG	BNA					91	J				
DIETHYLPHTHALATE	UG/KG	BNA										
FLUORANTHENE	UG/KG	BNA					400	J	480	J		
INDENO(1,2,3-C,D)PYRENE	UG/KG	BNA					240	J				
PHENANTHRENE	UG/KG	BNA					200	J				
PYRENE	UG/KG	BNA					980		1200			
4,4'-DDE	UG/KG	PEST / PCB										
4,4'-DDT	UG/KG	PEST / PCB										
ALPHA-CHLORDANE	UG/KG	PEST / PCB					180	J				
GAMMA-CHLORDANE	UG/KG	PEST / PCB					170	J				
DIESEL	MG/KG	TPHC										
2-BUTANONE	UG/KG	VOA										
ACETONE	UG/KG	VOA										
CARBON DISULFIDE	UG/KG	VOA										
TOLUENE	UG/KG	VOA										
XYLENES (TOTAL)	UG/KG	VOA										

DATA QUALIFIER DEFINITIONS

For the purposes of this document the following code letters and associated definitions are provided.

A - Possible interference from polychlorinated diphenyl ethers.

B - The concentration reported is greater than the instrument detection limit(IDL) but less than the contract required detection limit(CRDL).

D - Compounds identified in an analysis at a secondary dilution.

J - The associated value is an estimated quantity.

R - The data are unusable. (Note: Analyte may or may not be present.)

U - The material was analyzed for, but was not detected above the level of the associated value. The associated value is either the sample quantitation limit or the sample detection limit.

UJ - The material was analyzed for, but was not detected. The associated value is an estimate and may be inaccurate or imprecise.

Z - Matrix interference, not a confirmed concentration.

TABLE 3.4-9

NAVSTA-SAN DIEGO
SITE 4 SOILS
INORGANIC COMPOUNDS

		SAMPLE NUMBER:	NS4-BH1-S01-5		NS4-BH1-S02-10		NS4-BH2-S01-5		NS4-BH2-S02-15		NS4-BH2-S03-5 FD	
		SAMPLING DATE:	01/24/91		01/24/91		01/24/91		01/24/91		01/24/91	
		BORING:	BH1		BH1		BH2		BH2		BH2	
		SITE:	NS4		NS4		NS4		NS4		NS4	
		DEPTH:	5		10		5		15		5 FD	
COMPOUND NAME	UNITS	TEST CODE	RESULT	QUALIFIER	RESULT	QUALIFIER	RESULT	QUALIFIER	RESULT	QUALIFIER	RESULT	QUALIFIER
ANTIMONY	MG/KG	CAC METALS	33.7	J							4.8	B
ARSENIC	MG/KG	CAC METALS	3.4		1.3	B	2.1	B	2.4		1.7	B
BARIUM	MG/KG	CAC METALS	82.0		38.0	B	75.7		135		85.2	
BERYLLIUM	MG/KG	CAC METALS	1.3		1.0	B	2.0		2.2		1.7	
CADMIUM	MG/KG	CAC METALS	2.7									
CHROMIUM	MG/KG	CAC METALS	51.7		6.0		13.6		14.6		10	
COBALT	MG/KG	CAC METALS	4.4	B	3.2	B	7.7	B	9.6	B	8.8	B
COPPER	MG/KG	CAC METALS	450								64.0	
LEAD	MG/KG	CAC METALS	3280		11.3		26.6				80.4	
MERCURY	MG/KG	CAC METALS	0.69				0.21					
MOLYBDENUM	MG/KG	CAC METALS										
NICKEL	MG/KG	CAC METALS	4.8	B	4.4	B	5.5	B	4.3	B	3.4	B
SELENIUM	MG/KG	CAC METALS										
SILVER	MG/KG	CAC METALS										
THALLIUM	MG/KG	CAC METALS	0.22	B					0.26	B	0.29	B
VANADIUM	MG/KG	CAC METALS	23.6		21.3		51.4		53.4		53.7	
ZINC	MG/KG	CAC METALS					81.1		33.5		84.0	
CAC WET EXTRACTION	DATE	CAC WET EX										
COPPER	MG/L	CAC WET EX										
LEAD	MG/L	CAC WET EX	250								5.8	

TABLE 3.4-9

NAVSTA-SAN DIEGO
SITE 4 SOILS
INORGANIC COMPOUNDS

		SAMPLE NUMBER:	NS4-BH3-S01-5		NS4-BH3-S02-10		NS4-BH4-S01-5		NS4-BH4-S02-15		NS4-BH5-S01-10	
		SAMPLING DATE:	01/25/91		01/25/91		01/25/91		01/25/91		01/29/91	
		BORING:	BH3		BH3		BH4		BH4		BH5	
		SITE:	NS4		NS4		NS4		NS4		NS4	
		DEPTH:	5		10		5		15		10	
COMPOUND NAME	UNITS	TEST CODE	RESULT	QUALIFIER	RESULT	QUALIFIER	RESULT	QUALIFIER	RESULT	QUALIFIER	RESULT	QUALIFIER
ANTIMONY	MG/KG	CAC METALS										
ARSENIC	MG/KG	CAC METALS	1.4	B	2.8		3.6		6.3		5.9	B
BARIUM	MG/KG	CAC METALS	26.8	B	28.3	B	29.7	B	49.9	B	125	
BERYLLIUM	MG/KG	CAC METALS	0.79	B	0.96	B	0.90	B	2.4		4.1	
CADMIUM	MG/KG	CAC METALS										
CHROMIUM	MG/KG	CAC METALS	5.1		6.4		4.9		20.3		25.6	
COBALT	MG/KG	CAC METALS	3.0	B	2.4	B	2.4	B	7.2	B	12.6	B
COPPER	MG/KG	CAC METALS										
LEAD	MG/KG	CAC METALS					7.5				15.7	
MERCURY	MG/KG	CAC METALS									0.58	
MOLYBDENUM	MG/KG	CAC METALS										
NICKEL	MG/KG	CAC METALS							4.8	B		
SELENIUM	MG/KG	CAC METALS										
SILVER	MG/KG	CAC METALS										
THALLIUM	MG/KG	CAC METALS							0.29	B		
VANADIUM	MG/KG	CAC METALS	19.8		15.2		18.7		56.7		73.9	
ZINC	MG/KG	CAC METALS										
CAC WET EXTRACTION	DATE	CAC WET EX										
COPPER	MG/L	CAC WET EX										
LEAD	MG/L	CAC WET EX										

TABLE 3.4-9

NAVSTA-SAN DIEGO
SITE 4 SOILS
INORGANIC COMPOUNDS

		SAMPLE NUMBER:	NS4-BH5-S02-15		NS4-BH6-S01-5		NS4-BH6-S02-10		NS4-BH6-S03-5-FD		NS4-BH6-S06-15	
		SAMPLING DATE:	01/29/91		01/28/91		01/28/91		01/28/91		01/28/91	
		BORING:	BH5		BH6		BH6		BH6		BH6	
		SITE:	NS4		NS4		NS4		NS4		NS4	
		DEPTH:	15		5		10		5-FD		15	
COMPOUND NAME	UNITS	TEST CODE	RESULT	QUALIFIER	RESULT	QUALIFIER	RESULT	QUALIFIER	RESULT	QUALIFIER	RESULT	QUALIFIER
ANTIMONY	MG/KG	CAC METALS										
ARSENIC	MG/KG	CAC METALS			1.8	B	3.6		1.8	B	2.6	
BARIUM	MG/KG	CAC METALS	34.1	B	28.3	B	47.1		27.9	B	35.9	B
BERYLLIUM	MG/KG	CAC METALS	2.1		0.41	B	1.9		0.42	B	1.9	
CADMIUM	MG/KG	CAC METALS										
CHROMIUM	MG/KG	CAC METALS	13.9		3.5		12.8		4.1		16.9	
COBALT	MG/KG	CAC METALS	4.8	B	1.5	B	5.5	B	1.4	B	5.3	B
COPPER	MG/KG	CAC METALS										
LEAD	MG/KG	CAC METALS										
MERCURY	MG/KG	CAC METALS										
MOLYBDENUM	MG/KG	CAC METALS					2.6	B			3.6	B
NICKEL	MG/KG	CAC METALS					3.0	B			4.2	B
SELENIUM	MG/KG	CAC METALS										
SILVER	MG/KG	CAC METALS										
THALLIUM	MG/KG	CAC METALS	0.52	B	0.20	B			0.40	B	0.49	B
VANADIUM	MG/KG	CAC METALS	28.4		9.8	B	30.9		11.3		32.7	
ZINC	MG/KG	CAC METALS										
CAC WET EXTRACTION	DATE	CAC WET EX										
COPPER	MG/L	CAC WET EX										
LEAD	MG/L	CAC WET EX										

TABLE 3.4-9

NAVSTA-SAN DIEGO
SITE 4 SOILS
INORGANIC COMPOUNDS

		SAMPLE NUMBER:	NS4-BH7-S01-10		NS4-BH7-S02-15		NS4-BH8-S01-5		NS4-BH8-S02-10		NS4-BH8-S03-15	
		SAMPLING DATE:	01/28/91		01/28/91		01/28/91		01/28/91		01/28/91	
		BORING:	BH7		BH7		BH8		BH8		BH8	
		SITE:	NS4		NS4		NS4		NS4		NS4	
		DEPTH:	10		15		5		10		15	
COMPOUND NAME	UNITS	TEST CODE	RESULT	QUALIFIER	RESULT	QUALIFIER	RESULT	QUALIFIER	RESULT	QUALIFIER	RESULT	QUALIFIER
ANTIMONY	MG/KG	CAC METALS										
ARSENIC	MG/KG	CAC METALS			2.0	B	2.0	B	1.2	B	4.5	
BARIUM	MG/KG	CAC METALS	71.9		137		50.1		87.7		45.8	B
BERYLLIUM	MG/KG	CAC METALS	4.0		6.3		1.7		5.6		3.1	
CADMIUM	MG/KG	CAC METALS										
CHROMIUM	MG/KG	CAC METALS	24.7		10.2		10.7		37.1		20.6	
COBALT	MG/KG	CAC METALS	9.6	B	4.8	B	4.2	B	14.0	B	7.6	B
COPPER	MG/KG	CAC METALS			190				187			
LEAD	MG/KG	CAC METALS										
MERCURY	MG/KG	CAC METALS	0.75									
MOLYBDENUM	MG/KG	CAC METALS	2.7	B	5.6	B			5.9	B	2.4	B
NICKEL	MG/KG	CAC METALS	7.0	B			3.4	B	10.7	B	4.6	B
SELENIUM	MG/KG	CAC METALS			0.54	B						
SILVER	MG/KG	CAC METALS										
THALLIUM	MG/KG	CAC METALS			0.54	B					0.55	B
VANADIUM	MG/KG	CAC METALS	59.5		20.9		29.4		86.2		46.3	
ZINC	MG/KG	CAC METALS										
CAC WET EXTRACTION	DATE	CAC WET EX										
COPPER	MG/L	CAC WET EX										
LEAD	MG/L	CAC WET EX										

TABLE 3.4-9

NAVSTA-SAN DIEGO
SITE 4 SOILS
INORGANIC COMPOUNDS

		SAMPLE NUMBER:	NS4-MW1-S01-10		NS4-MW1-S02-15		NS4-MW2-S01-5		NS4-MW2-S02-10		NS4-MW2-S03-15	
		SAMPLING DATE:	01/29/91		01/29/91		01/28/91		01/28/91		01/28/91	
		BORING:	MW1		MW1		MW2		MW2		MW2	
		SITE:	NS4		NS4		NS4		NS4		NS4	
		DEPTH:	10		15		5		10		15	
COMPOUND NAME	UNITS	TEST CODE	RESULT	QUALIFIER	RESULT	QUALIFIER	RESULT	QUALIFIER	RESULT	QUALIFIER	RESULT	QUALIFIER
ANTIMONY	MG/KG	CAC METALS										
ARSENIC	MG/KG	CAC METALS	1.8	B			1.4	B	1.6	B	2.2	B
BARIUM	MG/KG	CAC METALS	14.4	B	24.8	B	26.8	B			45.2	B
BERYLLIUM	MG/KG	CAC METALS	0.86	B	1.7		0.67	B	0.33	B	2.7	
CADMIUM	MG/KG	CAC METALS										
CHROMIUM	MG/KG	CAC METALS	6.6		10.5		4.3		2.4		15.9	
COBALT	MG/KG	CAC METALS	2.0	B	4.8	B	2.2	B			5.4	B
COPPER	MG/KG	CAC METALS										
LEAD	MG/KG	CAC METALS					19.3					
MERCURY	MG/KG	CAC METALS			0.25		0.31					
MOLYBDENUM	MG/KG	CAC METALS			2.2	B	1.9	B			2.2	B
NICKEL	MG/KG	CAC METALS					2.2	B			3.3	B
SELENIUM	MG/KG	CAC METALS	0.65	B								
SILVER	MG/KG	CAC METALS										
THALLIUM	MG/KG	CAC METALS			0.44	B						
VANADIUM	MG/KG	CAC METALS	17.5		32.7		16.6		5.0	B	35.9	
ZINC	MG/KG	CAC METALS										
CAC WET EXTRACTION	DATE	CAC WET EX										
COPPER	MG/L	CAC WET EX										
LEAD	MG/L	CAC WET EX										

TABLE 3.4-9

NAVSTA-SAN DIEGO
SITE 4 SOILS
INORGANIC COMPOUNDS

		SAMPLE NUMBER:	NS4-MW3-S01-5		NS4-MW3-S02-10		NS4-MW3-S02-10-FD		NS4-MW3-S02-15		NS4-MW4-S01-5	
		SAMPLING DATE:	01/28/91		01/28/91		01/28/91		01/28/91		01/29/91	
		BORING:	MW3		MW3		MW3		MW3		MW4	
		SITE:	NS4		NS4		NS4		NS4		NS4	
		DEPTH:	5		10		10-FD		15		5	
COMPOUND NAME	UNITS	TEST CODE	RESULT	QUALIFIER	RESULT	QUALIFIER	RESULT	QUALIFIER	RESULT	QUALIFIER	RESULT	QUALIFIER
ANTIMONY	MG/KG	CAC METALS										
ARSENIC	MG/KG	CAC METALS	0.86	BJ	16.6		1.8	B			1.6	B
BARIUM	MG/KG	CAC METALS	52.3		76.0		16.1	B			75.1	
BERYLLIUM	MG/KG	CAC METALS	2.0		2.0		0.68	B			1.7	
CADMIUM	MG/KG	CAC METALS										
CHROMIUM	MG/KG	CAC METALS	9.9		4.2		4.2				9.8	
COBALT	MG/KG	CAC METALS	5.4	B	6.2	B					5.3	B
COPPER	MG/KG	CAC METALS			136							
LEAD	MG/KG	CAC METALS	131		1250		20.7				16.4	
MERCURY	MG/KG	CAC METALS	0.16		0.78							
MOLYBDENUM	MG/KG	CAC METALS			2.4	B						
NICKEL	MG/KG	CAC METALS	5.6	B								
SELENIUM	MG/KG	CAC METALS					0.47	B				
SILVER	MG/KG	CAC METALS										
THALLIUM	MG/KG	CAC METALS										
VANADIUM	MG/KG	CAC METALS	40.1		16.8		12.6				27.5	
ZINC	MG/KG	CAC METALS										
CAC WET EXTRACTION	DATE	CAC WET EX										
COPPER	MG/L	CAC WET EX										
LEAD	MG/L	CAC WET EX			5.9				31			

TABLE 3.4-9

NAVSTA-SAN DIEGO
SITE 4 SOILS
INORGANIC COMPOUNDS

		SAMPLE NUMBER:	NS4-MW4-S02-10		NS4-MW4-S03-15		NS4-MW4-S04-20		NS4-SS1-S01		NS4-SS2-S01	
		SAMPLING DATE:	01/29/91		01/29/91		01/29/91		02/12/91		02/12/91	
		BORING:	MW4		MW4		MW4		SS1		SS2	
		SITE:	NS4		NS4		NS4		NS4		NS4	
		DEPTH:	10		15		20		NS4-SS1-S01		NS4-SS2-S01	
COMPOUND NAME	UNITS	TEST CODE	RESULT	QUALIFIER	RESULT	QUALIFIER	RESULT	QUALIFIER	RESULT	QUALIFIER	RESULT	QUALIFIER
ANTIMONY	MG/KG	CAC METALS							6.0	J		
ARSENIC	MG/KG	CAC METALS	1.0	B	2.7		2.2	B	5.4	J	12.9	
BARIUM	MG/KG	CAC METALS	25.6	B	74.9		163		171		291	
BERYLLIUM	MG/KG	CAC METALS	2.9		3.0		3.1		4.9		4.5	
CADMIUM	MG/KG	CAC METALS							1.9		3.9	
CHROMIUM	MG/KG	CAC METALS	18.3		17.1		16.2		67.3		51.0	
COBALT	MG/KG	CAC METALS	6.2	B	8.9	B	10.6	B	16.2		16.1	B
COPPER	MG/KG	CAC METALS	26.5						421		466	
LEAD	MG/KG	CAC METALS	3.6						223	J	267	
MERCURY	MG/KG	CAC METALS							0.37		0.79	
MOLYBDENUM	MG/KG	CAC METALS					1.9	B	1.9	B	3.7	B
NICKEL	MG/KG	CAC METALS	4.2	B					30.7		26.1	
SELENIUM	MG/KG	CAC METALS										
SILVER	MG/KG	CAC METALS									3.4	B
THALLIUM	MG/KG	CAC METALS							0.25	B		
VANADIUM	MG/KG	CAC METALS	51.1		44.5		49.9		92.8		92.0	
ZINC	MG/KG	CAC METALS	40.6						649		727	
CAC WET EXTRACTION	DATE	CAC WET EX										
COPPER	MG/L	CAC WET EX							9.43		0.374	
LEAD	MG/L	CAC WET EX							5.06		6.26	

TABLE 3.4-9

NAVSTA-SAN DIEGO
SITE 4 SOILS
INORGANIC COMPOUNDS

SAMPLE NUMBER: NS4-SS3-S01
SAMPLING DATE: 02/12/91
BORING: SS3
SITE: NS4
DEPTH: NS4-SS3-S01

COMPOUND NAME	UNITS	TEST CODE	RESULT	QUALIFIER
ANTIMONY	MG/KG	CAC METALS		
ARSENIC	MG/KG	CAC METALS	2.4	B
BARIUM	MG/KG	CAC METALS	75.8	
BERYLLIUM	MG/KG	CAC METALS	2.7	
CADMIUM	MG/KG	CAC METALS		
CHROMIUM	MG/KG	CAC METALS	19.1	
COBALT	MG/KG	CAC METALS	8.3	B
COPPER	MG/KG	CAC METALS		
LEAD	MG/KG	CAC METALS	11.4	
MERCURY	MG/KG	CAC METALS		
MOLYBDENUM	MG/KG	CAC METALS		
NICKEL	MG/KG	CAC METALS	4.8	B
SELENIUM	MG/KG	CAC METALS		
SILVER	MG/KG	CAC METALS		
THALLIUM	MG/KG	CAC METALS		
VANADIUM	MG/KG	CAC METALS	55.0	
ZINC	MG/KG	CAC METALS		
CAC WET EXTRACTION	DATE	CAC WET EX		
COPPER	MG/L	CAC WET EX		
LEAD	MG/L	CAC WET EX		

DATA QUALIFIER DEFINITIONS

For the purposes of this document the following code letters and associated definitions are provided.

A - Possible interference from polychlorinated diphenyl ethers.

B - The concentration reported is greater than the instrument detection limit(IDL) but less than the contract required detection limit(CRDL).

D - Compounds identified in an analysis at a secondary dilution.

J - The associated value is an estimated quantity.

R - The data are unusable. (Note: Analyte may or may not be present.)

U - The material was analyzed for, but was not detected above the level of the associated value. The associated value is either the sample quantitation limit or the sample detection limit.

UJ - The material was analyzed for, but was not detected. The associated value is an estimate and may be inaccurate or imprecise.

Z - Matrix interference, not a confirmed concentration.

TABLE 3.4-10

NAVSTA-SAN DIEGO
SITE 4 WATER
ORGANIC COMPOUNDS

		SAMPLE NUMBER:	NS4-MW1-GW1		NS4-MW2-GW1		NS4-MW3-GW1		NS4-MW4-GW1		NS4-MW4-GW2-FD	
		SAMPLING DATE:	02/13/91		02/11/91		02/12/91		02/11/91		02/11/91	
		BORING:	MW1		MW2		MW3		MW4		MW4	
		SITE:	NS4		NS4		NS4		NS4		NS4	
		DEPTH:	NS4-MW1-GW1		NS4-MW2-GW1		NS4-MW3-GW1		NS4-MW4-GW1		FD	
COMPOUND NAME	UNITS	TEST CODE	RESULT	QUALIFIER	RESULT	QUALIFIER	RESULT	QUALIFIER	RESULT	QUALIFIER	RESULT	QUALIFIER
CARBON DISULFIDE	UG/L	VOA					5					
TRICHLOROETHENE	UG/L	VOA			55							
STODDARD	UG/L	TPHC	880									

DATA QUALIFIER DEFINITIONS

For the purposes of this document the following code letters and associated definitions are provided.

A - Possible interference from polychlorinated diphenyl ethers.

B - The concentration reported is greater than the instrument detection limit(IDL) but less than the contract required detection limit(CRDL).

D - Compounds identified in an analysis at a secondary dilution.

J - The associated value is an estimated quantity.

R - The data are unusable. (Note: Analyte may or may not be present.)

U - The material was analyzed for, but was not detected above the level of the associated value. The associated value is either the sample quantitation limit or the sample detection limit.

UJ - The material was analyzed for, but was not detected. The associated value is an estimate and may be inaccurate or imprecise.

Z - Matrix interference, not a confirmed concentration.

TABLE 3.4-11

NAVSTA-SAN DIEGO
SITE 4 WATER
INORGANIC COMPOUNDS

		SAMPLE NUMBER:	NS4-MW1-GW1		NS4-MW2-GW1		NS4-MW3-GW1		NS4-MW4-GW1		NS4-MW4-GW2-FD	
		SAMPLING DATE:	02/13/91		02/11/91		02/12/91		02/11/91		02/11/91	
		BORING:	MW1		MW2		MW3		MW4		MW4	
		SITE:	NS4		NS4		NS4		NS4		NS4	
		DEPTH:	NS4-MW1-GW1		NS4-MW2-GW1		NS4-MW3-GW1		NS4-MW4-GW1		FD	
COMPOUND NAME	UNITS	TEST CODE	RESULT	QUALIFIER	RESULT	QUALIFIER	RESULT	QUALIFIER	RESULT	QUALIFIER	RESULT	QUALIFIER
ANTIMONY	UG/L	CAC METALS	43.6	B	45.6	B					41.0	B
ARSENIC	UG/L	CAC METALS							2.0	B		
BARIUM	UG/L	CAC METALS	96.2	B	71.1	B	74.9	B	98.0	B	91.9	B
BERYLLIUM	UG/L	CAC METALS			1.0	B						
CADMIUM	UG/L	CAC METALS	8.7									
COBALT	UG/L	CAC METALS							5.3	B		
MOLYBDENUM	UG/L	CAC METALS	24.5	B	24.5	B			60.6	B	53.1	B
SELENIUM	UG/L	CAC METALS	10.0	B								
SILVER	UG/L	CAC METALS	6.7	B					4.6	B	6.0	B
THALLIUM	UG/L	CAC METALS					11.0	B	12.0	B		

DATA QUALIFIER DEFINITIONS

For the purposes of this document the following code letters and associated definitions are provided.

A - Possible interference from polychlorinated diphenyl ethers.

B - The concentration reported is greater than the instrument detection limit(IDL) but less than the contract required detection limit(CRDL).

D - Compounds identified in an analysis at a secondary dilution.

J - The associated value is an estimated quantity.

R - The data are unusable. (Note: Analyte may or may not be present.)

U - The material was analyzed for, but was not detected above the level of the associated value. The associated value is either the sample quantitation limit or the sample detection limit.

UJ - The material was analyzed for, but was not detected. The associated value is an estimate and may be inaccurate or imprecise.

Z - Matrix interference, not a confirmed concentration.

DPDO

VOCs. Of the VOCs, carbon disulfide is the only commonly occurring compound. Carbon disulfide occurs in 11 of the 39 soil samples ranging from 10 to 370 µg/kg. Acetone and 2-butanone is found in two samples, and toluene and xylenes are found in one. Table 3.4-8 lists the samples containing these compounds and their concentrations.

BNAs. Five soil samples exhibit semivolatile compounds in their analysis. The most common BNA group found was PAHs; however, the compounds exhibiting the highest concentrations were phthalates. Diethylphthalate was reported from soil sample NS4-MW03-S01-5 at a concentration of 91,000 µg/kg. Soil sample NS4-BH01-S01-5 exhibited the greatest number of BNA compounds, including PAHs and phthalates.

TPHs. Contamination by TPH is evident in three soil samples with concentrations ranging from 20 to 40 ppm.

Pesticides and PCBs. The pesticide dibutyl chlorendate is found in all soil samples taken. Concentrations of dibutyl chlorendate range from 28 to 119 µg/kg. Other pesticides found are 4,4-DDE and 4,4-DDT in MW03-S01-5.

Metals. Because of the composition of soil minerals, concentrations of heavy metals may be reported that do not necessarily indicate that contamination is present. For this investigation, a soil boring for background comparisons was installed at each site. Comparison of analytical results for the soils to the results from the background data will identify all elevated soil concentrations of metals. Table 3.4-9 lists the inorganic analytes found in soils at the DPDO storage yard.

Only one soil sample (BH01-S01-5) exhibits elevated levels of several metals, including antimony, chromium, copper, lead, and thallium. Thallium, a radioactive element, occurs in 11 of the samples from 8 borings at concentrations ranging from 0.20 to 0.55 mg/kg. Lead occurs in 12 soil samples ranging from 3.6 to 3,280 mg/kg. Sample BH01-S01-5 was found to have the widest suite of metals, elevated considerably above background levels (compare Table 3.3-1 to 3.4-9). Lead may be an extractable metal in some soils at this site, appearing in two extractions ranging from 5.8 to 250 mg/kg.

DPDO Storage Yard.

3.4.4.2 Surface Sediment

VOCs. No VOCs were reported from surface sediment samples.

BNAs. Three samples were collected from surface sediments, two of which exhibited a large suite of BNAs including anthracenes, pyrenes, and phthalates; however, in most cases, the reported concentrations were below the instrument detection limit and represent estimated values. Pyrene was reported from SS1-501 and SS2-501 at levels near 1 µg/kg.

Pesticides and PCBs. The pesticides alpha-chloradane, and gamma-chlordane were reported from SS1-501.

Metals. Surface sediment samples were compared to background soil samples to evaluate metal contamination. Two samples showed several metals with significant elevation above background. Of particular interest, zinc, nickel, lead, copper, and chromium were found to be elevated up to two orders of magnitude above background. This type of contamination is typical of electroplating operations. Thallium was also reported from SS1-S01.

The soil and surface sediment data indicate that there are two areas of gross contamination:

- The dry stream bed where SS1 and SS2 were collected
- Soils to approximately 5 to 10 feet depth around soil boring BH01.

Of more concern, however, is the apparent dessimented contamination, albeit at low levels, of the pesticide dibutyl chlorendate.

3.4.4.3 Groundwater Data

Contaminants found in the four samples of groundwater collected at the DPDO Storage Area include carbon disulfide, trichloroethane, fuel oil, cadmium, molybdenum, selenium, and dibutyl chlorendate. These contaminants are found in the low parts per billion. Of particular concern is the occurrence of carbon disulfide and the pesticide dibutyl chlorendate, both of which are reported from soils at this site.

VOCs. Trichloroethane is found in one sample, and carbon disulfide is found in three groundwater samples.

BNAs. There are no BNAs reported from groundwater at the DPDO Storage Area.

TPHs. Stoddard fuel is reported at 880 µg/L from MW01-GW1.

Pesticides. Dibutyl chlorendate was found in every groundwater sample analyzed.

Metals. MW04 is the background well for the DPDO Storage Area and was used for comparison to analytical results from the other wells. Cadmium and selenium were reported from MW01-GW1 at levels higher than background. Thallium, however, appeared in both MW04-GW1 and MW01-GW1 suggesting that there may be some impact on groundwater at the background locality.

3.4.5 Site 7 - Sewer Plant Site

3.4.5.1 Soils Data

A total of eight borings were completed at Site 7, three of which were converted to monitoring wells. The samples were analyzed for BNA, metals, waste extraction test metals, cyanide, pesticides and PCBs, TPH, and VOCs. A total of 30 soil samples were collected for chemical analyses. Tables 3.4-11 and 3.4-12 lists the soil and concentration analytes found in each boring at Site 7.

There were no soil samples that contained petroleum hydrocarbons. Soil samples from the MW07 represent background for this site.

VOCs. A total of 11 different VOCs were detected in the Site 7 soil samples: 1,1,1-trichloroethane, 2-butanone, 4-methyl-2-pentanone, acetone, carbon disulfide, carbon tetrachloride, ethyl benzene, tetrachloroethene, toluene, trichloroethene, and total xylenes (Table 3.4-12). The samples that were found to contain volatile compounds were from borings BH01, BH02, and MW03 (Figure 3-7).

Three of the VOCS most often found in soil samples at Site 7 are carbon disulfide, 2-butanone, and total xylenes. Xylenes were detected in a total of seven samples from 3 borings ranging from 8 to 72 µg/kg in BH01, BH02, and BH03.

TABLE 3.4-12

NAVSTA-SAN DIEGO
SITE 7 WATER
ORGANIC COMPOUNDS

		SAMPLE NUMBER:	NS7-MW1-GW1		NS7-MW2-GW1		NS7-MW3-GW1	
		SAMPLING DATE:	02/14/91		02/14/91		02/15/91	
		BORING:	MW1		MW2		MW3	
		SITE:	NS7		NS7		NS7	
		DEPTH:	NS7-MW1-GW1		NS7-MW2-GW1		NS7-MW3-GW1	
COMPOUND NAME	UNITS	TEST CODE	RESULT	QUALIFIER	RESULT	QUALIFIER	RESULT	QUALIFIER
1,1,1-TRICHLOROETHANE	UG/L	VOA			3	J		
ACETONE	UG/L	VOA			22			
CARBON TETRACHLORIDE	UG/L	VOA					9	

DATA QUALIFIER DEFINITIONS

For the purposes of this document the following code letters and associated definitions are provided.

A - Possible interference from polychlorinated diphenyl ethers.

B - The concentration reported is greater than the instrument detection limit(IDL) but less than the contract required detection limit(CRDL).

D - Compounds identified in an analysis at a secondary dilution.

J - The associated value is an estimated quantity.

R - The data are unusable. (Note: Analyte may or may not be present.)

U - The material was analyzed for, but was not detected above the level of the associated value. The associated value is either the sample quantitation limit or the sample detection limit.

UJ - The material was analyzed for, but was not detected. The associated value is an estimate and may be inaccurate or imprecise.

Z - Matrix interference, not a confirmed concentration.

TABLE 3.4-13

NAVSTA-SAN DIEGO
SITE 7 SOILS
INORGANIC COMPOUNDS

		SAMPLE NUMBER:	NS7-BH1-S01-4		NS7-BH1-S02-9		NS7-BH1-S03-14		NS7-BH1-S03-14-FD		NS7-BH1-S04-19	
		SAMPLING DATE:	01/22/91		01/22/91		01/22/91		01/22/91		01/22/91	
		BORING:	BH1		BH1		BH1		BH1		BH1	
		SITE:	NS7		NS7		NS7		NS7		NS7	
		DEPTH:	4		9		14		14-FD		19	
COMPOUND NAME	UNITS	TEST CODE	RESULT	QUALIFIER	RESULT	QUALIFIER	RESULT	QUALIFIER	RESULT	QUALIFIER	RESULT	QUALIFIER
ANTIMONY	UG/KG	CAC METALS	6.0	B					6.4	B	5.0	B
ARSENIC	UG/KG	CAC METALS	4.4		4.0	J	3.7		3.2		3.2	
BARIUM	UG/KG	CAC METALS	180		142		84.5		95.7		207	
CADMIUM	UG/KG	CAC METALS	5.0		3.0							
CHROMIUM	UG/KG	CAC METALS	65.0		39.9		15.5		23.1		15.6	
COBALT	UG/KG	CAC METALS	8.5	B	7.4	B	5.9	B	8.4	B	7.9	B
COPPER	UG/KG	CAC METALS	84.9		53.9		15.0		27.2		9.6	
LEAD	UG/KG	CAC METALS	91.4		94.7		23.6		21.2		10.6	
MERCURY	UG/KG	CAC METALS	1.7		1.0		0.22		0.46			
MOLYBDENUM	UG/KG	CAC METALS	2.6	B								
NICKEL	UG/KG	CAC METALS	24.8		13.5		6.5	B	9.1		4.9	B
SELENIUM	UG/KG	CAC METALS	0.52	B								
SILVER	UG/KG	CAC METALS	15.0		8.1		2.2	B	3.2		0.70	B
VANADIUM	UG/KG	CAC METALS	41.9		35.2		30.8		41.2		50.7	
ZINC	UG/KG	CAC METALS	253		162		48.2		74.7		41.2	
CAC WET EXTRACTION	DATE	CAC WET EX										
LEAD	MG/L	CAC WET EX										
TOTAL CYANIDE	UG/KG	CN	1									

TABLE 3.4-13

NAVSTA-SAN DIEGO
SITE 7 SOILS
INORGANIC COMPOUNDS

		SAMPLE NUMBER:	NS7-BH2-S01-5		NS7-BH2-S02-10		NS7-BH2-S03-15		NS7-BH3-S01-2		NS7-BH3-S02-8	
		SAMPLING DATE:	01/23/91		01/23/91		01/23/91		01/22/91		01/22/91	
		BORING:	BH2		BH2		BH2		BH3		BH3	
		SITE:	NS7		NS7		NS7		NS7		NS7	
		DEPTH:	5		10		15		2		8	
COMPOUND NAME	UNITS	TEST CODE	RESULT	QUALIFIER	RESULT	QUALIFIER	RESULT	QUALIFIER	RESULT	QUALIFIER	RESULT	QUALIFIER
ANTIMONY	UG/KG	CAC METALS	9.4	J			5.4	B	4.7	B		
ARSENIC	UG/KG	CAC METALS	4.6		3.1		2.4		0.99	B	2.9	
BARIUM	UG/KG	CAC METALS	197		103		112		47.2		61.2	
CADMIUM	UG/KG	CAC METALS	3.9				1.6					
CHROMIUM	UG/KG	CAC METALS	58.7		30.5		30.8		8.3		13.0	
COBALT	UG/KG	CAC METALS	9.0	B	6.0	B	10.4	B	6.3	B	8.0	B
COPPER	UG/KG	CAC METALS	79.8				98.3		5.8		11.4	
LEAD	UG/KG	CAC METALS	106				27.6		5.8	B	7.3	
MERCURY	UG/KG	CAC METALS	1.3		0.55		0.49					
MOLYBDENUM	UG/KG	CAC METALS	2.5	B								
NICKEL	UG/KG	CAC METALS	20.7		9.6		10.9		2.8	B	5.5	B
SELENIUM	UG/KG	CAC METALS										
SILVER	UG/KG	CAC METALS	12.2		5.2							
VANADIUM	UG/KG	CAC METALS	41.8		47.5		58.2		27.2		39.5	
ZINC	UG/KG	CAC METALS							17.9		37.2	
CAC WET EXTRACTION	DATE	CAC WET EX										
LEAD	MG/L	CAC WET EX										
TOTAL CYANIDE	UG/KG	CN										

TABLE 3.4-13

NAVSTA-SAN DIEGO
SITE 7 SOILS
INORGANIC COMPOUNDS

		SAMPLE NUMBER:	NS7-BH3-S03-14		NS7-BH3-S04-18		NS7-BH4-S01-5		NS7-BH4-S02-10		NS7-BH4-S03-15	
		SAMPLING DATE:	01/22/91		01/22/91		01/23/91		01/23/91		01/23/91	
		BORING:	BH3		BH3		BH4		BH4		BH4	
		SITE:	NS7		NS7		NS7		NS7		NS7	
		DEPTH:	14		18		5		10		15	
COMPOUND NAME	UNITS	TEST CODE	RESULT	QUALIFIER	RESULT	QUALIFIER	RESULT	QUALIFIER	RESULT	QUALIFIER	RESULT	QUALIFIER
ANTIMONY	UG/KG	CAC METALS	4.7	B								
ARSENIC	UG/KG	CAC METALS	1.3	B	2.7		3.1				2.5	
BARIUM	UG/KG	CAC METALS	141		130		188		104		85.9	
CADMIUM	UG/KG	CAC METALS					4.2					
CHROMIUM	UG/KG	CAC METALS	9.0		24.3		66.0		28.3		23.6	
COBALT	UG/KG	CAC METALS	5.5	B	14.1		8.9	B	7.2	B	7.0	B
COPPER	UG/KG	CAC METALS	7.0		22.5		87.4					
LEAD	UG/KG	CAC METALS	3.0		5.4		64.5		25.8		29.6	
MERCURY	UG/KG	CAC METALS					1.8		0.47			
MOLYBDENUM	UG/KG	CAC METALS							1.9	B		
NICKEL	UG/KG	CAC METALS			7.7	B	20.2		8.1	B	5.9	B
SELENIUM	UG/KG	CAC METALS										
SILVER	UG/KG	CAC METALS			1.2	B	15.0		4.8			
VANADIUM	UG/KG	CAC METALS	42.6		85.0		54.9		54.7		52.7	
ZINC	UG/KG	CAC METALS	19.8		57.0							
CAC WET EXTRACTION	DATE	CAC WET EX										
LEAD	MG/L	CAC WET EX										
TOTAL CYANIDE	UG/KG	CN										

TABLE 3.4-13

NAVSTA-SAN DIEGO
SITE 7 SOILS
INORGANIC COMPOUNDS

		SAMPLE NUMBER:	NS7-BH4-S04-20		NS7-BH5-S01-5		NS7-BH5-S02-10		NS7-BH5-S02-10 FD		NS7-BH5-S03-15	
		SAMPLING DATE:	01/23/91		01/22/91		01/22/91		01/22/91		01/22/91	
		BORING:	BH4		BH5		BH5		BH5		BH5	
		SITE:	NS7		NS7		NS7		NS7		NS7	
		DEPTH:	20		5		10		10 FD		15	
COMPOUND NAME	UNITS	TEST CODE	RESULT	QUALIFIER	RESULT	QUALIFIER	RESULT	QUALIFIER	RESULT	QUALIFIER	RESULT	QUALIFIER
ANTIMONY	UG/KG	CAC METALS							4.5	B		
ARSENIC	UG/KG	CAC METALS	3.5		4.0		1.2	B	1.4	B	0.67	B
BARIUM	UG/KG	CAC METALS	67.4		118		29.3	B	24.8	B	24.8	B
CADMIUM	UG/KG	CAC METALS										
CHROMIUM	UG/KG	CAC METALS	16.4		22.3		11.6		13.1		6.9	
COBALT	UG/KG	CAC METALS	11.5		8.1	B	5.7	B	6.8	B	4.4	B
COPPER	UG/KG	CAC METALS			24.3		14.1		6.9		4.4	B
LEAD	UG/KG	CAC METALS			25.8		2.7		3.0		3.6	
MERCURY	UG/KG	CAC METALS			1.3							
MOLYBDENUM	UG/KG	CAC METALS										
NICKEL	UG/KG	CAC METALS	6.5	B	8.1	B	2.0	B			2.7	B
SELENIUM	UG/KG	CAC METALS										
SILVER	UG/KG	CAC METALS			2.4							
VANADIUM	UG/KG	CAC METALS	53.8		48.5		46.9		49.7		21.2	
ZINC	UG/KG	CAC METALS			69.4		19.2		18.3		17.2	
CAC WET EXTRACTION	DATE	CAC WET EX										
LEAD	MG/L	CAC WET EX										
TOTAL CYANIDE	UG/KG	CN			1							

TABLE 3.4-13

NAVSTA-SAN DIEGO
SITE 7 SOILS
INORGANIC COMPOUNDS

		SAMPLE NUMBER:	NS7-BH5-S04-20		NS7-MW1-S01-5		NS7-MW1-S02-10		NS7-MW1-S03-15		NS7-MW1-S04-15FD	
		SAMPLING DATE:	01/22/91		01/23/91		01/23/91		01/23/91		01/23/91	
		BORING:	BH5		MW1		MW1		MW1		MW1	
		SITE:	NS7		NS7		NS7		NS7		NS7	
		DEPTH:	20		5		10		15		15FD	
COMPOUND NAME	UNITS	TEST CODE	RESULT	QUALIFIER	RESULT	QUALIFIER	RESULT	QUALIFIER	RESULT	QUALIFIER	RESULT	QUALIFIER
ANTIMONY	UG/KG	CAC METALS							4.9	B	4.1	B
ARSENIC	UG/KG	CAC METALS	1.0	B	2.5		2.5					
BARIUM	UG/KG	CAC METALS	45.4	B			79.5					
CADMIUM	UG/KG	CAC METALS										
CHROMIUM	UG/KG	CAC METALS	10.8		18.7		16.7		2.9		2.4	
COBALT	UG/KG	CAC METALS	5.8	B	6.8	B	12.6		1.8	B	2.0	B
COPPER	UG/KG	CAC METALS	6.3								2.1	B
LEAD	UG/KG	CAC METALS	3.9									
MERCURY	UG/KG	CAC METALS										
MOLYBDENUM	UG/KG	CAC METALS										
NICKEL	UG/KG	CAC METALS	3.6	B	5.4	B	9.0	B				
SELENIUM	UG/KG	CAC METALS										
SILVER	UG/KG	CAC METALS										
VANADIUM	UG/KG	CAC METALS	26.7		47.1		48.6		10.8		10.1	
ZINC	UG/KG	CAC METALS	24.8									
CAC WET EXTRACTION	DATE	CAC WET EX										
LEAD	MG/L	CAC WET EX										
TOTAL CYANIDE	UG/KG	CN										

TABLE 3.4-13

NAVSTA-SAN DIEGO
SITE 7 SOILS
INORGANIC COMPOUNDS

		SAMPLE NUMBER:	NS7-MW1-S07-20		NS7-MW2-S01-10		NS7-MW2-S02-15		NS7-MW2-S03-20		NS7-MW2-S03-20 FD	
		SAMPLING DATE:	01/23/91		01/22/91		01/22/91		01/22/91		01/22/91	
		BORING:	MW1		MW2		MW2		MW2		MW2	
		SITE:	NS7		NS7		NS7		NS7		NS7	
		DEPTH:	20		10		15		20		20 FD	
COMPOUND NAME	UNITS	TEST CODE	RESULT	QUALIFIER	RESULT	QUALIFIER	RESULT	QUALIFIER	RESULT	QUALIFIER	RESULT	QUALIFIER
ANTIMONY	UG/KG	CAC METALS										
ARSENIC	UG/KG	CAC METALS	4.8		0.74	B	1.4	B	1.4	B	2.9	
BARIUM	UG/KG	CAC METALS	349		38.9	B	99.7		24.5	B	41.0	B
CADMIUM	UG/KG	CAC METALS										
CHROMIUM	UG/KG	CAC METALS	18.1		7.0		17.6		8.1		14.3	
COBALT	UG/KG	CAC METALS	12.1		5.2	B	17.8		3.6	B	6.2	B
COPPER	UG/KG	CAC METALS			12.6		27.2		7.0		49.8	
LEAD	UG/KG	CAC METALS			1.5		3.7		1.9		6.7	
MERCURY	UG/KG	CAC METALS										
MOLYBDENUM	UG/KG	CAC METALS										
NICKEL	UG/KG	CAC METALS	4.8	B			10.5		2.5	B	3.1	B
SELENIUM	UG/KG	CAC METALS										
SILVER	UG/KG	CAC METALS					1.1	B				
VANADIUM	UG/KG	CAC METALS	55.2		32.0		84.0		19.2		32.2	
ZINC	UG/KG	CAC METALS			15.8		48.6		20.8		38.7	
CAC WET EXTRACTION	DATE	CAC WET EX										
LEAD	MG/L	CAC WET EX										
TOTAL CYANIDE	UG/KG	CN										

TABLE 3.4-13

NAVSTA-SAN DIEGO
SITE 7 SOILS
INORGANIC COMPOUNDS

		SAMPLE NUMBER:	NS7-MW3-S01-5		NS7-MW3-S02-10		NS7-MW3-S03-15		NS7-MW3-S04-20	
		SAMPLING DATE:	01/23/91		01/23/91		01/23/91		01/23/91	
		BORING:	MW3		MW3		MW3		MW3	
		SITE:	NS7		NS7		NS7		NS7	
		DEPTH:	5		10		15		20	
COMPOUND NAME	UNITS	TEST CODE	RESULT	QUALIFIER	RESULT	QUALIFIER	RESULT	QUALIFIER	RESULT	QUALIFIER
ANTIMONY	UG/KG	CAC METALS								
ARSENIC	UG/KG	CAC METALS	2.3		2.8		3.9			
BARIUM	UG/KG	CAC METALS	104		239		177		184	
CADMIUM	UG/KG	CAC METALS	1.8		4.6					
CHROMIUM	UG/KG	CAC METALS	31.3		85.4		24.0		21.1	
COBALT	UG/KG	CAC METALS	9.1	B	6.9	B	9.7	B	19.8	
COPPER	UG/KG	CAC METALS			97.5					
LEAD	UG/KG	CAC METALS	13.3		77.7					
MERCURY	UG/KG	CAC METALS	0.25		1.5					
MOLYBDENUM	UG/KG	CAC METALS	2.5	B	2.8	B				
NICKEL	UG/KG	CAC METALS	9.1		23.6		5.1	B	7.5	B
SELENIUM	UG/KG	CAC METALS								
SILVER	UG/KG	CAC METALS			16.5					
VANADIUM	UG/KG	CAC METALS	63.6		40.4		66.3		68.4	
ZINC	UG/KG	CAC METALS								
CAC WET EXTRACTION	DATE	CAC WET EX								
LEAD	MG/L	CAC WET EX	0.964							
TOTAL CYANIDE	UG/KG	CN								

DATA QUALIFIER DEFINITIONS

For the purposes of this document the following code letters and associated definitions are provided.

A - Possible interference from polychlorinated diphenyl ethers.

B - The concentration reported is greater than the instrument detection limit(IDL) but less than the contract required detection limit(CRDL).

D - Compounds identified in an analysis at a secondary dilution.

J - The associated value is an estimated quantity.

R - The data are unusable. (Note: Analyte may or may not be present.)

U - The material was analyzed for, but was not detected above the level of the associated value. The associated value is either the sample quantitation limit or the sample detection limit.

UJ - The material was analyzed for, but was not detected. The associated value is an estimate and may be inaccurate or imprecise.

Z - Matrix interference, not a confirmed concentration.

TABLE 3.4-14

NAVSTA-SAN DIEGO
SITE 7 SOILS
ORGANIC COMPOUNDS

		SAMPLE NUMBER:	NS7-BH1-S01-4		NS7-BH1-S02-9		NS7-BH1-S03-14		NS7-BH1-S03-14-FD		NS7-BH1-S04-19	
		SAMPLING DATE:	01/22/91		01/22/91		01/22/91		01/22/91		01/22/91	
		BORING:	BH1		BH1		BH1		BH1		BH1	
		SITE:	NS7		NS7		NS7		NS7		NS7	
		DEPTH:	4		9		14		14-FD		19	
COMPOUND NAME	UNITS	TEST CODE	RESULT	QUALIFIER	RESULT	QUALIFIER	RESULT	QUALIFIER	RESULT	QUALIFIER	RESULT	QUALIFIER
1,2,4-TRICHLOROBENZENE	UG/KG	BNA					120	J				
1,2-DICHLOROBENZENE	UG/KG	BNA										
1,4-DICHLOROBENZENE	UG/KG	BNA					210	J				
2-METHYLNAPHTHALENE	UG/KG	BNA	1900	J	830	J	720		260	J		
3,3'-DICHLOROBENZIDINE	UG/KG	BNA										
4-CHLOROANILINE	UG/KG	BNA	540	J			1300		490			
4-METHYLPHENOL	UG/KG	BNA										
ACENAPHTHENE	UG/KG	BNA					52	J				
ANTHRACENE	UG/KG	BNA										
BENZO(A)ANTHRACENE	UG/KG	BNA					98	J	76	J		
BENZO(A)PYRENE	UG/KG	BNA							62	J		
BENZO(B)FLUORANTHENE	UG/KG	BNA							74	J		
BENZO(G,H,I)PERYLENE	UG/KG	BNA										
BENZO(K)FLUORANTHENE	UG/KG	BNA							65	J		
BIS(2-ETHYLHEXYL)PHTHALATE	UG/KG	BNA	16000		11000	J	5400		2800			
CHRYSENE	UG/KG	BNA			500	J			93	J		
DI-N-BUTYLPHTHALATE	UG/KG	BNA					150	J				
DI-N-OCTYLPHTHALATE	UG/KG	BNA					230	J				
DIETHYLPHTHALATE	UG/KG	BNA										
FLUORANTHENE	UG/KG	BNA	1300	J	760	J	220	J	150	J		
FLUORENE	UG/KG	BNA					120	J	49	J		
INDENO(1,2,3-C,D)PYRENE	UG/KG	BNA					40	J				
NAPHTHALENE	UG/KG	BNA	530	J					74	J		
PHENANTHRENE	UG/KG	BNA	1300	J	760	J	410		200	J		
PYRENE	UG/KG	BNA	1200	J	860	J	250	J	160	J		
4,4'-DDE	UG/KG	PEST / PCB	290	E	140	J	130					
ENDOSULFAN I	UG/KG	PEST / PCB										
ENDOSULFAN SULFATE	UG/KG	PEST / PCB							38			
ENDRIN	UG/KG	PEST / PCB										
PCB-1254	UG/KG	PEST / PCB	2300		1200	J	1530		420			
2-BUTANONE	UG/KG	VOA	32		62						22	
4-METHYL-2-PENTANONE	UG/KG	VOA			5	J						
ACETONE	UG/KG	VOA			210	B	36					
CARBON DISULFIDE	UG/KG	VOA			22		2	J	15		31	
ETHYLBENZENE	UG/KG	VOA	6	J								
TETRACHLOROETHENE	UG/KG	VOA							2	J		
TOLUENE	UG/KG	VOA	4	J	12				2	J		
TRICHLOROETHENE	UG/KG	VOA			4	J						
XYLENES (TOTAL)	UG/KG	VOA	34		72				8		8	

TABLE 3.4-14

NAVSTA-SAN DIEGO
SITE 7 SOILS
ORGANIC COMPOUNDS

		SAMPLE NUMBER:	NS7-BH2-S01-5		NS7-BH2-S02-10		NS7-BH2-S03-15		NS7-BH3-S01-2		NS7-BH3-S02-8	
		SAMPLING DATE:	01/23/91		01/23/91		01/23/91		01/22/91		01/22/91	
		BORING:	BH2		BH2		BH2		BH3		BH3	
		SITE:	NS7		NS7		NS7		NS7		NS7	
		DEPTH:	5		10		15		2		8	
COMPOUND NAME	UNITS	TEST CODE	RESULT	QUALIFIER	RESULT	QUALIFIER	RESULT	QUALIFIER	RESULT	QUALIFIER	RESULT	QUALIFIER
1,2,4-TRICHLOROBENZENE	UG/KG	BNA										
1,2-DICHLOROBENZENE	UG/KG	BNA	180	J								
1,4-DICHLOROBENZENE	UG/KG	BNA	280	J	510	J	130	J				
2-METHYLNAPHTHALENE	UG/KG	BNA	470	J	1100		370	J				
3,3'-DICHLOROBENZIDINE	UG/KG	BNA					81	J				
4-CHLOROANILINE	UG/KG	BNA	2200		2600		900					
4-METHYLPHENOL	UG/KG	BNA	610	J								
ACENAPHTHENE	UG/KG	BNA			130	J	72	J				
ANTHRACENE	UG/KG	BNA	100	J	260	J	170	J				
BENZO(A)ANTHRACENE	UG/KG	BNA	180	J	470	J	490					
BENZO(A)PYRENE	UG/KG	BNA			290	J	310	J				
BENZO(B)FLUORANTHENE	UG/KG	BNA			300	J	390				96	J
BENZO(G,H,I)PERYLENE	UG/KG	BNA					110	J				
BENZO(K)FLUORANTHENE	UG/KG	BNA			340	J	310	J				
BIS(2-ETHYLHEXYL)PHTHALATE	UG/KG	BNA	7400		9000		3100					
CHRYSENE	UG/KG	BNA	220	J	580	J	520				79	J
DI-N-BUTYLPHTHALATE	UG/KG	BNA										
DI-N-OCTYLPHTHALATE	UG/KG	BNA	260	J	340	J						
DIETHYLPHTHALATE	UG/KG	BNA										
FLUORANTHENE	UG/KG	BNA	410	J	1200		1000				100	J
FLUORENE	UG/KG	BNA	110	J	210	J	110	J				
INDENO(1,2,3-C,D)PYRENE	UG/KG	BNA			160	J	120	J				
NAPHTHALENE	UG/KG	BNA										
PHENANTHRENE	UG/KG	BNA	500	J	1300		690					
PYRENE	UG/KG	BNA	500	J	1200		980				120	J
4,4'-DDE	UG/KG	PEST / PCB	100	J	100							
ENDOSULFAN I	UG/KG	PEST / PCB										
ENDOSULFAN SULFATE	UG/KG	PEST / PCB										
ENDRIN	UG/KG	PEST / PCB					40					
PCB-1254	UG/KG	PEST / PCB	1000	J	1100		330					
2-BUTANONE	UG/KG	VOA	83		14		12					
4-METHYL-2-PENTANONE	UG/KG	VOA										
ACETONE	UG/KG	VOA	340	J								
CARBON DISULFIDE	UG/KG	VOA	5	J	3	J	18					
ETHYLBENZENE	UG/KG	VOA										
TETRACHLOROETHENE	UG/KG	VOA										
TOLUENE	UG/KG	VOA	5	J	2	J						
TRICHLOROETHENE	UG/KG	VOA					1	J				
XYLENES (TOTAL)	UG/KG	VOA	59		18		15					

TABLE 3.4-14

NAVSTA-SAN DIEGO
SITE 7 SOILS
ORGANIC COMPOUNDS

		SAMPLE NUMBER:	NS7-BH3-S03-14		NS7-BH3-S04-18		NS7-BH4-S01-5		NS7-BH4-S02-10		NS7-BH4-S03-15	
		SAMPLING DATE:	01/22/91		01/22/91		01/23/91		01/23/91		01/23/91	
		BORING:	BH3		BH3		BH4		BH4		BH4	
		SITE:	NS7		NS7		NS7		NS7		NS7	
		DEPTH:	14		18		5		10		15	
COMPOUND NAME	UNITS	TEST CODE	RESULT	QUALIFIER	RESULT	QUALIFIER	RESULT	QUALIFIER	RESULT	QUALIFIER	RESULT	QUALIFIER
1,2,4-TRICHLOROBENZENE	UG/KG	BNA										
1,2-DICHLOROBENZENE	UG/KG	BNA										
1,4-DICHLOROBENZENE	UG/KG	BNA							57	J	77	J
2-METHYLNAPHTHALENE	UG/KG	BNA							180	J	46	J
3,3'-DICHLOROBENZIDINE	UG/KG	BNA										
4-CHLOROANILINE	UG/KG	BNA					530		610		1000	
4-METHYLPHENOL	UG/KG	BNA										
ACENAPHTHENE	UG/KG	BNA							48	J	83	J
ANTHRACENE	UG/KG	BNA									62	J
BENZO(A)ANTHRACENE	UG/KG	BNA										
BENZO(A)PYRENE	UG/KG	BNA							60	J	100	J
BENZO(B)FLUORANTHENE	UG/KG	BNA							120	J	230	J
BENZO(G,H,I)PERYLENE	UG/KG	BNA										
BENZO(K)FLUORANTHENE	UG/KG	BNA										
BIS(2-ETHYLHEXYL)PHTHALATE	UG/KG	BNA			83	J	410		1800		2200	
CHRYSENE	UG/KG	BNA							74	J	180	J
DI-N-BUTYLPHTHALATE	UG/KG	BNA										
DI-N-OCTYLPHTHALATE	UG/KG	BNA										
DIETHYLPHTHALATE	UG/KG	BNA										
FLUORANTHENE	UG/KG	BNA							140	J	340	J
FLUORENE	UG/KG	BNA										
INDENO(1,2,3-C,D)PYRENE	UG/KG	BNA										
NAPHTHALENE	UG/KG	BNA							77	J	100	J
PHENANTHRENE	UG/KG	BNA							150	J	320	J
PYRENE	UG/KG	BNA					59	J	130	J	320	J
4,4'-DDE	UG/KG	PEST / PCB					26		36		45	
ENDOSULFAN I	UG/KG	PEST / PCB										
ENDOSULFAN SULFATE	UG/KG	PEST / PCB										
ENDRIN	UG/KG	PEST / PCB										
PCB-1254	UG/KG	PEST / PCB					380		260		380	
2-BUTANONE	UG/KG	VOA										
4-METHYL-2-PENTANONE	UG/KG	VOA										
ACETONE	UG/KG	VOA										
CARBON DISULFIDE	UG/KG	VOA										
ETHYLBENZENE	UG/KG	VOA										
TETRACHLOROETHENE	UG/KG	VOA										
TOLUENE	UG/KG	VOA										
TRICHLOROETHENE	UG/KG	VOA										
XYLENES (TOTAL)	UG/KG	VOA									5	J

TABLE 3.4-14

NAVSTA-SAN DIEGO
SITE 7 SOILS
ORGANIC COMPOUNDS

		SAMPLE NUMBER:	NS7-BH4-S04-20		NS7-BH5-S01-5		NS7-BH5-S02-10		NS7-BH5-S02-10 FD		NS7-BH5-S03-15	
		SAMPLING DATE:	01/23/91		01/22/91		01/22/91		01/22/91		01/22/91	
		BORING:	BH4		BH5		BH5		BH5		BH5	
		SITE:	NS7		NS7		NS7		NS7		NS7	
		DEPTH:	20		5		10		10 FD		15	
COMPOUND NAME	UNITS	TEST CODE	RESULT	QUALIFIER	RESULT	QUALIFIER	RESULT	QUALIFIER	RESULT	QUALIFIER	RESULT	QUALIFIER
1,2,4-TRICHLOROBENZENE	UG/KG	BNA										
1,2-DICHLOROBENZENE	UG/KG	BNA										
1,4-DICHLOROBENZENE	UG/KG	BNA										
2-METHYLNAPHTHALENE	UG/KG	BNA										
3,3'-DICHLOROBENZIDINE	UG/KG	BNA										
4-CHLOROANILINE	UG/KG	BNA			100	J						
4-METHYLPHENOL	UG/KG	BNA										
ACENAPHTHENE	UG/KG	BNA										
ANTHRACENE	UG/KG	BNA										
BENZO(A)ANTHRACENE	UG/KG	BNA										
BENZO(A)PYRENE	UG/KG	BNA										
BENZO(B)FLUORANTHENE	UG/KG	BNA										
BENZO(G,H,I)PERYLENE	UG/KG	BNA										
BENZO(K)FLUORANTHENE	UG/KG	BNA										
BIS(2-ETHYLHEXYL)PHTHALATE	UG/KG	BNA					87	J	180	J		
CHRYSENE	UG/KG	BNA										
DI-N-BUTYLPHTHALATE	UG/KG	BNA										
DI-N-OCTYLPHTHALATE	UG/KG	BNA										
DIETHYLPHTHALATE	UG/KG	BNA					160	J			500	
FLUORANTHENE	UG/KG	BNA										
FLUORENE	UG/KG	BNA										
INDENO(1,2,3-C,D)PYRENE	UG/KG	BNA										
NAPHTHALENE	UG/KG	BNA										
PHENANTHRENE	UG/KG	BNA										
PYRENE	UG/KG	BNA										
4,4'-DDE	UG/KG	PEST / PCB										
ENDOSULFAN I	UG/KG	PEST / PCB										
ENDOSULFAN SULFATE	UG/KG	PEST / PCB										
ENDRIN	UG/KG	PEST / PCB										
PCB-1254	UG/KG	PEST / PCB										
2-BUTANONE	UG/KG	VOA										
4-METHYL-2-PENTANONE	UG/KG	VOA										
ACETONE	UG/KG	VOA										
CARBON DISULFIDE	UG/KG	VOA										
ETHYLBENZENE	UG/KG	VOA										
TETRACHLOROETHENE	UG/KG	VOA										
TOLUENE	UG/KG	VOA										
TRICHLOROETHENE	UG/KG	VOA										
XYLENES (TOTAL)	UG/KG	VOA										

TABLE 3.4-14

NAVSTA-SAN DIEGO
SITE 7 SOILS
ORGANIC COMPOUNDS

		SAMPLE NUMBER:	NS7-BH5-S04-20		NS7-MW1-S01-5		NS7-MW1-S02-10		NS7-MW1-S03-15		NS7-MW1-S04-15FD	
		SAMPLING DATE:	01/22/91		01/23/91		01/23/91		01/23/91		01/23/91	
		BORING:	BH5		MW1		MW1		MW1		MW1	
		SITE:	NS7		NS7		NS7		NS7		NS7	
		DEPTH:	20		5		10		15		15FD	
COMPOUND NAME	UNITS	TEST CODE	RESULT	QUALIFIER	RESULT	QUALIFIER	RESULT	QUALIFIER	RESULT	QUALIFIER	RESULT	QUALIFIER
1,2,4-TRICHLOROBENZENE	UG/KG	BNA										
1,2-DICHLOROBENZENE	UG/KG	BNA										
1,4-DICHLOROBENZENE	UG/KG	BNA										
2-METHYLNAPHTHALENE	UG/KG	BNA										
3,3'-DICHLOROBENZIDINE	UG/KG	BNA										
4-CHLOROANILINE	UG/KG	BNA										
4-METHYLPHENOL	UG/KG	BNA										
ACENAPHTHENE	UG/KG	BNA										
ANTHRACENE	UG/KG	BNA										
BENZO(A)ANTHRACENE	UG/KG	BNA										
BENZO(A)PYRENE	UG/KG	BNA										
BENZO(B)FLUORANTHENE	UG/KG	BNA										
BENZO(G,H,I)PERYLENE	UG/KG	BNA										
BENZO(K)FLUORANTHENE	UG/KG	BNA										
BIS(2-ETHYLHEXYL)PHTHALATE	UG/KG	BNA	46	J								
CHRYSENE	UG/KG	BNA										
DI-N-BUTYLPHTHALATE	UG/KG	BNA										
DI-N-OCTYLPHTHALATE	UG/KG	BNA										
DIETHYLPHTHALATE	UG/KG	BNA										
FLUORANTHENE	UG/KG	BNA										
FLUORENE	UG/KG	BNA										
INDENO(1,2,3-C,D)PYRENE	UG/KG	BNA										
NAPHTHALENE	UG/KG	BNA										
PHENANTHRENE	UG/KG	BNA										
PYRENE	UG/KG	BNA										
4,4'-DDE	UG/KG	PEST / PCB										
ENDOSULFAN I	UG/KG	PEST / PCB										
ENDOSULFAN SULFATE	UG/KG	PEST / PCB										
ENDRIN	UG/KG	PEST / PCB										
PCB-1254	UG/KG	PEST / PCB										
2-BUTANONE	UG/KG	VOA										
4-METHYL-2-PENTANONE	UG/KG	VOA										
ACETONE	UG/KG	VOA										
CARBON DISULFIDE	UG/KG	VOA										
ETHYLBENZENE	UG/KG	VOA										
TETRACHLOROETHENE	UG/KG	VOA										
TOLUENE	UG/KG	VOA										
TRICHLOROETHENE	UG/KG	VOA										
XYLENES (TOTAL)	UG/KG	VOA										

TABLE 3.4-14

NAVSTA-SAN DIEGO
SITE 7 SOILS
ORGANIC COMPOUNDS

		SAMPLE NUMBER:	NS7-MW1-S07-20		NS7-MW2-S01-10		NS7-MW2-S02-15		NS7-MW2-S03-20		NS7-MW2-S03-20 FD	
		SAMPLING DATE:	01/23/91		01/22/91		01/22/91		01/22/91		01/22/91	
		BORING:	MW1		MW2		MW2		MW2		MW2	
		SITE:	NS7		NS7		NS7		NS7		NS7	
		DEPTH:	20		10		15		20		20 FD	
COMPOUND NAME	UNITS	TEST CODE	RESULT	QUALIFIER	RESULT	QUALIFIER	RESULT	QUALIFIER	RESULT	QUALIFIER	RESULT	QUALIFIER
1,2,4-TRICHLOROBENZENE	UG/KG	BNA										
1,2-DICHLOROBENZENE	UG/KG	BNA										
1,4-DICHLOROBENZENE	UG/KG	BNA										
2-METHYLNAPHTHALENE	UG/KG	BNA										
3,3'-DICHLOROBENZIDINE	UG/KG	BNA										
4-CHLOROANILINE	UG/KG	BNA										
4-METHYLPHENOL	UG/KG	BNA										
ACENAPHTHENE	UG/KG	BNA										
ANTHRACENE	UG/KG	BNA										
BENZO(A)ANTHRACENE	UG/KG	BNA										
BENZO(A)PYRENE	UG/KG	BNA										
BENZO(B)FLUORANTHENE	UG/KG	BNA										
BENZO(G,H,I)PERYLENE	UG/KG	BNA										
BENZO(K)FLUORANTHENE	UG/KG	BNA										
BIS(2-ETHYLHEXYL)PHTHALATE	UG/KG	BNA					110	J	500		240	J
CHRYSENE	UG/KG	BNA										
DI-N-BUTYLPHTHALATE	UG/KG	BNA										
DI-N-OCTYLPHTHALATE	UG/KG	BNA										
DIETHYLPHTHALATE	UG/KG	BNA										
FLUORANTHENE	UG/KG	BNA										
FLUORENE	UG/KG	BNA										
INDENO(1,2,3-C,D)PYRENE	UG/KG	BNA										
NAPHTHALENE	UG/KG	BNA										
PHENANTHRENE	UG/KG	BNA										
PYRENE	UG/KG	BNA										
4,4'-DDE	UG/KG	PEST / PCB										
ENDOSULFAN I	UG/KG	PEST / PCB										
ENDOSULFAN SULFATE	UG/KG	PEST / PCB										
ENDRIN	UG/KG	PEST / PCB										
PCB-1254	UG/KG	PEST / PCB										
2-BUTANONE	UG/KG	VOA										
4-METHYL-2-PENTANONE	UG/KG	VOA										
ACETONE	UG/KG	VOA										
CARBON DISULFIDE	UG/KG	VOA										
ETHYLBENZENE	UG/KG	VOA										
TETRACHLOROETHENE	UG/KG	VOA										
TOLUENE	UG/KG	VOA										
TRICHLOROETHENE	UG/KG	VOA										
XYLENES (TOTAL)	UG/KG	VOA										

TABLE 3.4-14

NAVSTA-SAN DIEGO
SITE 7 SOILS
ORGANIC COMPOUNDS

	SAMPLE NUMBER:		NS7-MW3-S01-5		NS7-MW3-S02-10		NS7-MW3-S03-15		NS7-MW3-S04-20	
	SAMPLING DATE:		01/23/91		01/23/91		01/23/91		01/23/91	
	BORING:		MW3		MW3		MW3		MW3	
	SITE:		NS7		NS7		NS7		NS7	
	DEPTH:		5		10		15		20	
COMPOUND NAME	UNITS	TEST CODE	RESULT	QUALIFIER	RESULT	QUALIFIER	RESULT	QUALIFIER	RESULT	QUALIFIER
1,2,4-TRICHLOROBENZENE	UG/KG	BNA			160	J				
1,2-DICHLOROBENZENE	UG/KG	BNA								
1,4-DICHLOROBENZENE	UG/KG	BNA			300	J				
2-METHYLNAPHTHALENE	UG/KG	BNA			730					
3,3'-DICHLOROBENZIDINE	UG/KG	BNA								
4-CHLOROANILINE	UG/KG	BNA	470		1900					
4-METHYLPHENOL	UG/KG	BNA								
ACENAPHTHENE	UG/KG	BNA			69	J				
ANTHRACENE	UG/KG	BNA								
BENZO(A)ANTHRACENE	UG/KG	BNA			170	J				
BENZO(A)PYRENE	UG/KG	BNA								
BENZO(B)FLUORANTHENE	UG/KG	BNA			140	J				
BENZO(G,H,I)PERYLENE	UG/KG	BNA								
BENZO(K)FLUORANTHENE	UG/KG	BNA								
BIS(2-ETHYLHEXYL)PHTHALATE	UG/KG	BNA	650		4400		490		530	
CHRYSENE	UG/KG	BNA			200	J				
DI-N-BUTYLPHTHALATE	UG/KG	BNA								
DI-N-OCTYLPHTHALATE	UG/KG	BNA			160	J				
DIETHYLPHTHALATE	UG/KG	BNA								
FLUORANTHENE	UG/KG	BNA	47	J	360	J				
FLUORENE	UG/KG	BNA			110	J				
INDENO(1,2,3-C,D)PYRENE	UG/KG	BNA								
NAPHTHALENE	UG/KG	BNA								
PHENANTHRENE	UG/KG	BNA			440					
PYRENE	UG/KG	BNA	57	J	390	J				
4,4'-DDE	UG/KG	PEST / PCB			80	J				
ENDOSULFAN I	UG/KG	PEST / PCB	24	J						
ENDOSULFAN SULFATE	UG/KG	PEST / PCB								
ENDRIN	UG/KG	PEST / PCB								
PCB-1254	UG/KG	PEST / PCB	390		720	J				
2-BUTANONE	UG/KG	VOA			35	J				
4-METHYL-2-PENTANONE	UG/KG	VOA								
ACETONE	UG/KG	VOA								
CARBON DISULFIDE	UG/KG	VOA								
ETHYLBENZENE	UG/KG	VOA			48					
TETRACHLOROETHENE	UG/KG	VOA								
TOLUENE	UG/KG	VOA			44					
TRICHLOROETHENE	UG/KG	VOA								
XYLENES (TOTAL)	UG/KG	VOA			290					

DATA QUALIFIER DEFINITIONS

For the purposes of this document the following code letters and associated definitions are provided.

A - Possible interference from polychlorinated diphenyl ethers.

B - The concentration reported is greater than the instrument detection limit(IDL) but less than the contract required detection limit(CRDL).

D - Compounds identified in an analysis at a secondary dilution.

J - The associated value is an estimated quantity.

R - The data are unusable. (Note: Analyte may or may not be present.)

U - The material was analyzed for, but was not detected above the level of the associated value. The associated value is either the sample quantitation limit or the sample detection limit.

UJ - The material was analyzed for, but was not detected. The associated value is an estimate and may be inaccurate or imprecise.

Z - Matrix interference, not a confirmed concentration.

TABLE 3.4-15

NAVSTA-SAN DIEGO
SITE 7 WATER
INORGANIC COMPOUNDS

		SAMPLE NUMBER:	NS7-MW1-GW1		NS7-MW2-GW1		NS7-MW3-GW1	
		SAMPLING DATE:	02/14/91		02/14/91		02/15/91	
		BORING:	MW1		MW2		MW3	
		SITE:	NS7		NS7		NS7	
		DEPTH:	NS7-MW1-GW1		NS7-MW2-GW1		NS7-MW3-GW1	
COMPOUND NAME	UNITS	TEST CODE	RESULT	QUALIFIER	RESULT	QUALIFIER	RESULT	QUALIFIER
ANTIMONY	UG/L	CAC METALS			42.2	B	64.0	
ARSENIC	UG/L	CAC METALS	19.4				2.7	B
BARIUM	UG/L	CAC METALS	11.9	B	80.8	B	80.9	B
BERYLLIUM	UG/L	CAC METALS	1.3	B			1.6	B
CHROMIUM	UG/L	CAC METALS					6.0	B
LEAD	UG/L	CAC METALS	1.0	B				
MOLYBDENUM	UG/L	CAC METALS	13.2	B	22.8	B		
NICKEL	UG/L	CAC METALS					13.3	B
SELENIUM	UG/L	CAC METALS			1.0	B	14.0	B
SILVER	UG/L	CAC METALS	3.0	B	4.4	B	8.3	B
VANADIUM	UG/L	CAC METALS	113		30.2	B	65.5	
ZINC	UG/L	CAC METALS	46.8		73.6		29.9	

DATA QUALIFIER DEFINITIONS

For the purposes of this document the following code letters and associated definitions are provided.

A - Possible interference from polychlorinated diphenyl ethers.

B - The concentration reported is greater than the instrument detection limit(IDL) but less than the contract required detection limit(CRDL).

D - Compounds identified in an analysis at a secondary dilution.

J - The associated value is an estimated quantity.

R - The data are unusable. (Note: Analyte may or may not be present.)

U - The material was analyzed for, but was not detected above the level of the associated value. The associated value is either the sample quantitation limit or the sample detection limit.

UJ - The material was analyzed for, but was not detected. The associated value is an estimate and may be inaccurate or imprecise.

Z - Matrix interference, not a confirmed concentration.

Carbon disulfide was reported in three samples from BH01 and BH02. Concentrations ranged from 22 to 31 µg/kg in samples from BH01 and 3 to 18 µg/kg in BH02.

2-Butanone was found in samples from two borings, BH01 and BH02, ranging from 12 to 83 µg/kg.

Acetone and toluene were detected in BH01; and toluene was detected in BH02. Acetone concentrations ranged from 5 to 340 µg/kg. Toluene levels were more restricted ranging from 2 to 44 µg/kg.

Trichloroethane appeared in BH01 at 4 µg/kg (9 feet) and BH02 at 1 µg/kg (15 feet). Ethyl benzene was present in BH01 at 6 µg/kg (also at 9 feet) and MW03 at 48 µg/kg (10 feet). Finally, 4-methyl-2-pentanone was analyzed at 5 µg/kg in the 9-foot sample of BH01.

Cyanide was detected in two borings at Site 7 in BH01-S01-5 and BH05-S01-5; both showed concentrations of 1 µg/kg. These borings are found in the north-northwest and north portions of the sewer plant site.

BNAs. There were twenty-five different semivolatiles detected in the Site 8 soil samples (Table 3.4-12). Twenty-one soil samples from seven borings were found to contain semivolatiles. BH02 contained nine of the different BNAs. The highest concentration of any semivolatile analyzed in any sample was bis(2-ethylhexyl)phthalate in BH01 at 4 feet: 16,000 µg/kg.

Pesticides/PCBs. Pesticides/PCBs were detected in four borings at Site 7. Table 3.4-12 summarizes the findings of these compounds at the sewer plant. Pesticides and PCBs found include 4,4-DDE Endosulfan and Aroclor-1254 Endrin. Soils at BH01, BH02, BH04, and MW03 appear to be contaminated by PCB and pesticides throughout the soil column.

Metals. Soils from Site 7 were analyzed for CAC metals and cyanide. Metals concentrations of site samples were compared to metal concentrations in the background soil sample for the site and to the range for all background samples. Metals found in soil samples above background levels were chromium, copper, lead, mercury, and nickel. The data are summarized in Table 3.4-13.

The metals compounds most often found at elevated concentrations in the Site 7 soils were lead, copper, and chromium. The range in concentration for lead was 0 to 106 mg/kg. Copper concentrations exceeded the range found for all NAVSTA background samples in five soil samples and tended to be elevated when lead was elevated. The range for copper concentrations is 0 to 97.5 mg/kg.

Chromium was found at concentrations above background in 11 samples from 7 borings at concentrations ranging from 2.4 to 85.4 mg/kg. Chromium is the most wide-spread metal in soils found above background levels.

Mercury was found at levels exceeding the NAVSTA range for background in three samples. The range in mercury levels is 0 to 1.8 mg/kg.

Three samples at Site 7 contained levels of nickel above background levels. The concentration range for nickel is 0 to 24.8 mg/kg.

Cadmium and silver were detected in five samples, and eight with concentration ranges at 1.6 to 4.6 and 1.1 to 16.5 mg/kg, respectively.

3.4.5.2 Groundwater Data

Three groundwater samples were collected from Site 7. (See Figure 3-7). Monitoring well MW01 served as background. Tables 3.4-12 and 3.4-15 list analytes found in groundwater.

Organic Compounds. Groundwater at Site 7 exhibits impact by VOCs including chlorinated aromatics, chlorinated hydrocarbons, and PAHs. The pesticide dibutyl chlorendate is found in all samples; however, none of the pesticides or PCBs found in soils at Site 7 were found in groundwater.

Metals. Table 3.4-15 gives the CAC metals detected in groundwater samples at the sewer plant.

3.4.6 Site 8 - Fire Fighter Training Facility

3.4.6.1 Soils Data

Five borings were completed at Site 8. From each of these five borings, two samples were collected and submitted for chemical analysis of semivolatiles (BNA), metals, cyanide, PCBs, TPHs, and VOCs. Boring BH05 is a background sample, located outside the perimeter of the Fire Fighter Training Facility. Eleven soil samples were collected for chemical analyses. The QC samples were analyzed for the same parameters as the original samples collected from the borings. Tables 3.4-16 through 3.4-19 contain a complete list of all samples with elevated concentrations of analyte collected from each boring at Site 8 (Figure 3-9). All values have been blank corrected and validated. No cyanides or pesticides/PCBs were found in any of the boring samples collected.

VOCs. Only one VOC, acetone, was detected in the Site 8 soil samples. The samples that were found to contain acetone were from borings BH01 and BH02, which are at the north-northwest corner of the Fire Fighter Training Facility, near fuel Tank number 13.

TPHs. TPH was detected in only one boring at Site 8. A soil sample at a 15-foot depth from BH02 showed concentrations of 680 mg/kg for JP-4, 730 mg/kg for JP-5, and 650 mg/kg for diesel.

BNAs. There were four semivolatile compounds detected in the Site 8 soil samples: 2-methylnaphthalene, fluorene, phenanthrene, and naphthalene. The only sample found to contain semivolatiles was from boring BH02 at a depth of 15 feet in the north-northwest corner of the Fire Fighter Training Facility. 2-Methylnaphthalene was found at a concentration of 1,800 µg/kg, fluorene at 62, phenanthrene at 51, and naphthalene was found at a concentration of 550 µg/kg.

Dioxin and Dibenzofurans. Three samples were collected for analyses of dioxins and dibenzofurans in accordance with the direction received from the California DHS Toxic Substances Control Program. The results of the detectable compounds are reported in Table 3.4-16.

Metals. The samples most often found to contain metals above background concentrations were from BH01-S02-15, BH02-S02-15, BH03-S01-10, and BH04-S01-15. Borehole BH04

TABLE 3.4-16

NAVSTA-SAN DIEGO
SITE 8 SOILS
ORGANIC COMPOUNDS

		SAMPLE NUMBER:	NS8-BH1-S01-10		NS8-BH1-S02-5		NS8-BH2-S01-10		NS8-BH2-S01-10-15		NS8-BH2-S02-15	
		SAMPLING DATE:	01/30/91		01/30/91		01/30/91		01/30/91		01/30/91	
		BORING:	BH1		BH1		BH2		BH2		BH2	
		SITE:	NS8		NS8		NS8		NS8		NS8	
		DEPTH:	10		5		10		10-15		15	
COMPOUND NAME	UNITS	TEST CODE	RESULT	QUALIFIER	RESULT	QUALIFIER	RESULT	QUALIFIER	RESULT	QUALIFIER	RESULT	QUALIFIER
2-METHYLNAPHTHALENE	UG/KG	BNA									1800	
FLUORENE	UG/KG	BNA									62	J
NAPHTHALENE	UG/KG	BNA									550	
PHENANTHRENE	UG/KG	BNA									51	J
TOTAL HxCDF	PG/G	FURANS										
DIESEL	MG/KG	TPHC									680	2
JP4	MG/KG	TPHC									730	2
JP5	MG/KG	TPHC									650	
ACETONE	UG/KG	VOA	17								73	

TABLE 3.4-16

NAVSTA-SAN DIEGO
SITE 8 SOILS
ORGANIC COMPOUNDS

		SAMPLE NUMBER:	NS8-BH3-S01-10		NS8-BH3-S02-15		NS8-BH3-S03-10-15		NS8-BH3-S04-10-FD		NS8-BH3-S07-10-FD	
		SAMPLING DATE:	02/01/91		02/01/91		02/01/91		02/01/91		02/01/91	
		BORING:	BH3		BH3		BH3		BH3		BH3	
		SITE:	NS8		NS8		NS8		NS8		NS8	
		DEPTH:	10		15		10-15		10-FD		10-FD	
COMPOUND NAME	UNITS	TEST CODE	RESULT	QUALIFIER	RESULT	QUALIFIER	RESULT	QUALIFIER	RESULT	QUALIFIER	RESULT	QUALIFIER
2-METHYLNAPHTHALENE	UG/KG	BNA										
FLUORENE	UG/KG	BNA										
NAPHTHALENE	UG/KG	BNA										
PHENANTHRENE	UG/KG	BNA										
TOTAL HxCDF	PG/G	FURANS									0.23	A
DIESEL	MG/KG	TPHC										
JP4	MG/KG	TPHC										
JP5	MG/KG	TPHC										
ACETONE	UG/KG	VOA										

TABLE 3.4-16

NAVSTA-SAN DIEGO
SITE 8 SOILS
ORGANIC COMPOUNDS

		SAMPLE NUMBER:	NS8-BH4-S01-5		NS8-BH4-S02-10		NS8-BH5-S01-5		NS8-BH5-S02-10	
		SAMPLING DATE:	01/30/91		01/30/91		02/01/91		02/01/91	
		BORING:	BH4		BH4		BH5		BH5	
		SITE:	NS8		NS8		NS8		NS8	
		DEPTH:	5		10		5		10	
COMPOUND NAME	UNITS	TEST CODE	RESULT	QUALIFIER	RESULT	QUALIFIER	RESULT	QUALIFIER	RESULT	QUALIFIER
2-METHYLNAPHTHALENE	UG/KG	BNA								
FLUORENE	UG/KG	BNA								
NAPHTHALENE	UG/KG	BNA								
PHENANTHRENE	UG/KG	BNA								
TOTAL HxCDF	PG/G	FURANS								
DIESEL	MG/KG	TPHC								
JP4	MG/KG	TPHC								
JP5	MG/KG	TPHC								
ACETONE	UG/KG	VOA								

DATA QUALIFIER DEFINITIONS

For the purposes of this document the following code letters and associated definitions are provided.

A - Possible interference from polychlorinated diphenyl ethers.

B - The concentration reported is greater than the instrument detection limit(IDL) but less than the contract required detection limit(CRDL).

D - Compounds identified in an analysis at a secondary dilution.

J - The associated value is an estimated quantity.

R - The data are unusable. (Note: Analyte may or may not be present.)

U - The material was analyzed for, but was not detected above the level of the associated value. The associated value is either the sample quantitation limit or the sample detection limit.

UJ - The material was analyzed for, but was not detected. The associated value is an estimate and may be inaccurate or imprecise.

Z - Matrix interference, not a confirmed concentration.

TABLE 3.4-17

NAVSTA-SAN DIEGO
SITE 8 SOILS
INORGANIC COMPOUNDS

		SAMPLE NUMBER:	NS8-BH1-S01-10		NS8-BH1-S02-5		NS8-BH2-S01-10		NS8-BH2-S02-15		NS8-BH3-S01-10	
		SAMPLING DATE:	01/30/91		01/30/91		01/30/91		01/30/91		02/01/91	
		BORING:	BH1		BH1		BH2		BH2		BH3	
		SITE:	NS8		NS8		NS8		NS8		NS8	
		DEPTH:	10		5		10		15		10	
COMPOUND NAME	UNITS	TEST CODE	RESULT	QUALIFIER	RESULT	QUALIFIER	RESULT	QUALIFIER	RESULT	QUALIFIER	RESULT	QUALIFIER
ARSENIC	MG/KG	CAC METALS	1.6	B	4.6		1.9	B	2.0	BJ	1.5	B
BARIUM	MG/KG	CAC METALS	15.8	B	20.8	B	13.0	B	50.9		95.6	
BERYLLIUM	MG/KG	CAC METALS	0.31	B	0.50	B	0.33	B	0.31	B	0.80	B
CHROMIUM	MG/KG	CAC METALS	4.3		4.7		2.9		4.3		11.7	
COBALT	MG/KG	CAC METALS	2.0	B	2.6	B	1.7	B	2.8	BJ	6.7	B
COPPER	MG/KG	CAC METALS										
LEAD	MG/KG	CAC METALS	1.5		13.3		1.7		4.0			
MERCURY	MG/KG	CAC METALS			0.72							
NICKEL	MG/KG	CAC METALS									2.3	B
SILVER	MG/KG	CAC METALS							1.2	B		
THALLIUM	MG/KG	CAC METALS					0.50	B			0.78	B
VANADIUM	MG/KG	CAC METALS	10	B	22.1		8.0	B	17.6		39.8	
ZINC	MG/KG	CAC METALS			31.0							

TABLE 3.4-17

NAVSTA-SAN DIEGO
SITE 8 SOILS
INORGANIC COMPOUNDS

		SAMPLE NUMBER:	NS8-BH3-S02-15		NS8-BH3-S04-10-FD		NS8-BH4-S01-5		NS8-BH4-S02-10		NS8-BH5-S01-5	
		SAMPLING DATE:	02/01/91		02/01/91		01/30/91		01/30/91		02/01/91	
		BORING:	BH3		BH3		BH4		BH4		BH5	
		SITE:	NS8		NS8		NS8		NS8		NS8	
		DEPTH:	15		10-FD		5		10		5	
COMPOUND NAME	UNITS	TEST CODE	RESULT	QUALIFIER	RESULT	QUALIFIER	RESULT	QUALIFIER	RESULT	QUALIFIER	RESULT	QUALIFIER
ARSENIC	MG/KG	CAC METALS	1.5	B	1.8	B	2.3	B	1.7	B	2.0	B
BARIUM	MG/KG	CAC METALS			15.8	B	117		24.3	B		
BERYLLIUM	MG/KG	CAC METALS			0.27	B	1.4		0.38	B	0.29	B
CHROMIUM	MG/KG	CAC METALS	2.9		2.3		15.7		4.4		3.0	
COBALT	MG/KG	CAC METALS			1.5	B	9.1	B	2.1	B	1.2	B
COPPER	MG/KG	CAC METALS			43.5							
LEAD	MG/KG	CAC METALS					4.2		2.2			
MERCURY	MG/KG	CAC METALS										
NICKEL	MG/KG	CAC METALS					5.4	B				
SILVER	MG/KG	CAC METALS										
THALLIUM	MG/KG	CAC METALS										
VANADIUM	MG/KG	CAC METALS	7.6	B	7.7	B	52.9		12.3		10.7	
ZINC	MG/KG	CAC METALS					37.6					

TABLE 3.4-17

NAVSTA-SAN DIEGO
SITE 8 SOILS
INORGANIC COMPOUNDS

SAMPLE NUMBER: NS8-BH5-S02-10
SAMPLING DATE: 02/01/91
BORING: BH5
SITE: NS8
DEPTH: 10

COMPOUND NAME	UNITS	TEST CODE	RESULT	QUALIFIER
ARSENIC	MG/KG	CAC METALS	0.53	B
BARIUM	MG/KG	CAC METALS	27.7	B
BERYLLIUM	MG/KG	CAC METALS	1.1	B
CHROMIUM	MG/KG	CAC METALS	7.7	
COBALT	MG/KG	CAC METALS	3.7	B
COPPER	MG/KG	CAC METALS		
LEAD	MG/KG	CAC METALS	2.7	
MERCURY	MG/KG	CAC METALS		
NICKEL	MG/KG	CAC METALS		
SILVER	MG/KG	CAC METALS		
THALLIUM	MG/KG	CAC METALS		
VANADIUM	MG/KG	CAC METALS	23.0	
ZINC	MG/KG	CAC METALS		

DATA QUALIFIER DEFINITIONS

For the purposes of this document the following code letters and associated definitions are provided.

A - Possible interference from polychlorinated diphenyl ethers.

B - The concentration reported is greater than the instrument detection limit(IDL) but less than the contract required detection limit(CRDL).

D - Compounds identified in an analysis at a secondary dilution.

J - The associated value is an estimated quantity.

R - The data are unusable. (Note: Analyte may or may not be present.)

U - The material was analyzed for, but was not detected above the level of the associated value. The associated value is either the sample quantitation limit or the sample detection limit.

UJ - The material was analyzed for, but was not detected. The associated value is an estimate and may be inaccurate or imprecise.

Z - Matrix interference, not a confirmed concentration.

TABLE 3.4-18

NAVSTA-SAN DIEGO
SITE 8 WATER
ORGANIC COMPOUNDS

		SAMPLE NUMBER:	NS8-MW1-GW1		NS8-MW2-GW1		NS8-MW3-GW1		NS8-MW4-GW1		NS8-MW5-GW1	
		SAMPLING DATE:	02/14/91		02/12/91		02/13/91		02/12/91		02/13/91	
		BORING:	MW1		MW2		MW3		MW4		MW5	
		SITE:	NS8		NS8		NS8		NS8		NS8	
		DEPTH:	NS8-MW1-GW1		NS8-MW2-GW1		NS8-MW3-GW1		NS8-MW4-GW1		NS8-MW5-GW1	
COMPOUND NAME	UNITS	TEST CODE	RESULT	QUALIFIER	RESULT	QUALIFIER	RESULT	QUALIFIER	RESULT	QUALIFIER	RESULT	QUALIFIER
1,1-DICHLOROETHANE	UG/L	VOA	30				4	J				
1,2-DICHLOROETHENE (TOTAL)	UG/L	VOA	21									
BENZENE	UG/L	VOA	180				28		17			
CARBON DISULFIDE	UG/L	VOA					3	J			1	J
CHLOROETHANE	UG/L	VOA					6	J				
ETHYLBENZENE	UG/L	VOA	12									
TOLUENE	UG/L	VOA	1	J					2	J		
VINYL CHLORIDE	UG/L	VOA	8	J								
XYLENES (TOTAL)	UG/L	VOA							6			
2-METHYLNAPHTHALENE	UG/L	BNA							7	J		
BIS(2-ETHYLHEXYL)PHTHALATE	UG/L	BNA							1	J		
FLUORENE	UG/L	BNA					1	J	2	J		
PHENOL	UG/L	BNA	9	J			5	J				
DIESEL	UG/L	TPHC	350	Z			6370		4320	Z		
JP4	UG/L	TPHC	410	Z			3460	Z	2760	Z		
JP5	UG/L	TPHC	250				2630	Z	2460			

TABLE 3.4-18

NAVSTA-SAN DIEGO
SITE 8 WATER
ORGANIC COMPOUNDS

		SAMPLE NUMBER:	NS8-MW6-GW1		NS8-MW7-GW1		NS8-MW7-GW1-FD	
		SAMPLING DATE:	02/14/91		02/13/91		02/13/91	
		BORING:	MW6		MW7		MW7	
		SITE:	NS8		NS8		NS8	
		DEPTH:	NS8-MW6-GW1		NS8-MW7-GW1		FD	
COMPOUND NAME	UNITS	TEST CODE	RESULT	QUALIFIER	RESULT	QUALIFIER	RESULT	QUALIFIER
1,1-DICHLOROETHANE	UG/L	VOA						
1,2-DICHLOROETHENE (TOTAL)	UG/L	VOA						
BENZENE	UG/L	VOA	47		7		7	
CARBON DISULFIDE	UG/L	VOA						
CHLOROETHANE	UG/L	VOA						
ETHYLBENZENE	UG/L	VOA	2	J			6	
TOLUENE	UG/L	VOA			1	J		
VINYL CHLORIDE	UG/L	VOA						
XYLENES (TOTAL)	UG/L	VOA					2	J
2-METHYLNAPHTHALENE	UG/L	BNA						
BIS(2-ETHYLHEXYL)PHTHALATE	UG/L	BNA						
FLUORENE	UG/L	BNA						
PHENOL	UG/L	BNA	16	J	4	J	4	J
DIESEL	UG/L	TPHC	1200	Z				
JP4	UG/L	TPHC	1440	Z	350	Z	280	Z
JP5	UG/L	TPHC	1190					

DATA QUALIFIER DEFINITIONS

For the purposes of this document the following code letters and associated definitions are provided.

A - Possible interference from polychlorinated diphenyl ethers.

B - The concentration reported is greater than the instrument detection limit(IDL) but less than the contract required detection limit(CRDL).

D - Compounds identified in an analysis at a secondary dilution.

J - The associated value is an estimated quantity.

R - The data are unusable. (Note: Analyte may or may not be present.)

U - The material was analyzed for, but was not detected above the level of the associated value. The associated value is either the sample quantitation limit or the sample detection limit.

UJ - The material was analyzed for, but was not detected. The associated value is an estimate and may be inaccurate or imprecise.

Z - Matrix interference, not a confirmed concentration.

TABLE 3.4-19

NAVSTA-SAN DIEGO
SITE 8 WATER
INORGANIC COMPOUNDS

		SAMPLE NUMBER:	NS8-MW1-GW1		NS8-MW2-GW1		NS8-MW3-GW1		NS8-MW4-GW1		NS8-MW5-GW1	
		SAMPLING DATE:	02/14/91		02/12/91		02/13/91		02/12/91		02/13/91	
		BORING:	MW1		MW2		MW3		MW4		MW5	
		SITE:	NS8		NS8		NS8		NS8		NS8	
		DEPTH:	NS8-MW1-GW1		NS8-MW2-GW1		NS8-MW3-GW1		NS8-MW4-GW1		NS8-MW5-GW1	
COMPOUND NAME	UNITS	TEST CODE	RESULT	QUALIFIER	RESULT	QUALIFIER	RESULT	QUALIFIER	RESULT	QUALIFIER	RESULT	QUALIFIER
ANTIMONY	UG/L	CAC METALS	34.0	B	29.9	B	42.3	B	36.0	B	28.8	B
ARSENIC	UG/L	CAC METALS	1.7	B	1.7	B	1.1	B			4.5	B
BARIUM	UG/L	CAC METALS	139	B	72.0	B	104	B	643		93.0	B
CHROMIUM	UG/L	CAC METALS										
COPPER	UG/L	CAC METALS			7.4	B	7.0	B				
MOLYBDENUM	UG/L	CAC METALS			24.7	B	14.7	B			12.7	B
NICKEL	UG/L	CAC METALS									9.8	B
SILVER	UG/L	CAC METALS			5.0	B	7.1	B				
THALLIUM	UG/L	CAC METALS			1.0	B						
VANADIUM	UG/L	CAC METALS			32.6	B	45.1	B	15.2	B	37.6	B
ZINC	UG/L	CAC METALS			25.5		43.1		21.6		13.6	B

TABLE 3.4-19

NAVSTA-SAN DIEGO
SITE 8 WATER
INORGANIC COMPOUNDS

		SAMPLE NUMBER:	NS8-MW6-GW1		NS8-MW7-GW1		NS8-MW7-GW1-FD	
		SAMPLING DATE:	02/14/91		02/13/91		02/13/91	
		BORING:	MW6		MW7		MW7	
		SITE:	NS8		NS8		NS8	
		DEPTH:	NS8-MW6-GW1		NS8-MW7-GW1		FD	
COMPOUND NAME	UNITS	TEST CODE	RESULT	QUALIFIER	RESULT	QUALIFIER	RESULT	QUALIFIER
ANTIMONY	UG/L	CAC METALS	62.8		25.8	B	51.5	B
ARSENIC	UG/L	CAC METALS	1.7	B	2.1	B	2.2	B
BARIUM	UG/L	CAC METALS	98.6	B	111	B	102	B
CHROMIUM	UG/L	CAC METALS	4.1	B	4.4	B		
COPPER	UG/L	CAC METALS					7.0	B
MOLYBDENUM	UG/L	CAC METALS	17.4	BJ	8.5	B	12.0	B
NICKEL	UG/L	CAC METALS			10.1	B	14.2	B
SILVER	UG/L	CAC METALS			8.9	B		
THALLIUM	UG/L	CAC METALS			5.8	B		
VANADIUM	UG/L	CAC METALS	83.2		51.4		48.1	B
ZINC	UG/L	CAC METALS			40.6		43.1	

DATA QUALIFIER DEFINITIONS

or the purposes of this document the following code letters and associated definitions are provided.

A - Possible interference from polychlorinated diphenyl ethers.

B - The concentration reported is greater than the instrument detection limit(IDL) but less than the contract required detection limit(CRDL).

D - Compounds identified in an analysis at a secondary dilution.

J - The associated value is an estimated quantity.

R - The data are unusable. (Note: Analyte may or may not be present.)

U - The material was analyzed for, but was not detected above the level of the associated value. The associated value is either the sample quantitation limit or the sample detection limit.

UJ - The material was analyzed for, but was not detected. The associated value is an estimate and may be inaccurate or imprecise.

Z - Matrix interference, not a confirmed concentration.

contained nine elevated metal compounds, while BH01 had four, BH02 had three, and BH03 had five elevated metal compounds.

3.4.6.2 Groundwater Data. Site 8 has seven groundwater monitoring wells (Figure 3-9). One groundwater sample was collected from all seven of the Site 8 monitoring wells. Each sample was analyzed for BNAs, metals, cyanide, pesticides/PCBs, TPHs, and VOCs. One field duplicate was collected from MW07. Eleven metals, three TPH compounds, four BNAs, and nine VOCs, and no pesticides/PCBs were detected in the eight samples. No wells were installed off site to be representative of a background condition.

VOCs. Nine VOCs were detected in the groundwater samples. MW01 had six VOCs, more than any other monitoring well. Benzene appeared in five wells, ranging in concentration from 7 to 180 µg/L.

BNAs. MW02 and MW05 were the only wells that did not have detectable concentrations of BNAs. MW04 had three BNAs detected: 2-methylnaphthalene at 7 µg/L, bis(2-ethylhexyl)-phthalate at 1 µg/L, and fluorene at 2 µg/L. Fluorene also appeared in MW03 at 1 µg/L. MW03 contained phenol at 5 µg/L. Phenol appeared in four wells, i.e., more frequently than the other semivolatiles.

TPHs. Diesel was detected in samples from MW01, MW03, MW04, and MW06 ranging in concentrations from 350 to 6,370 µg/L. JP-5 was analyzed as a detectable compound in MW01 (250 µg/L), MW03 (2,630 µg/L), MW04 (2,460 µg/L), and MW06 (1,190 µg/L).

JP-4 was also detected in samples from MW01, MW03, MW04, MW06, and MW07 at concentrations ranging from 280 to 3,460 µg/L. Comparing the results of the TPH analyses with the detected volatile organic analysis (VOA) compounds indicates that the primary source of contamination is a fuel-derived waste.

Metals. Antimony and barium were detected in all eight wells. Arsenic and vanadium occurred, next most frequently, in six samples. Ten of the eleven metals detected were in MW07, the exception being copper. MW02 had nine, MW03 had eight, MW05 had seven, MW06 contained five, MW04 had four, and MW01 had three different metals.

4.0 Hazard Assessment

4.1 Introduction and Approach

The purpose of this preliminary risk evaluation is to evaluate whether the presence of chemicals at NAVSTA San Diego poses an immediate or substantial hazard to human health or the environment that may require interim remedial action. This evaluation addresses the impacts, if any, resulting from the potential exposure to these site-related chemicals. This preliminary risk evaluation is based on a qualitative review of available soil and groundwater data. The evaluation also characterizes the potential environmental hazards of the current soil and groundwater conditions and determines if further investigation is needed.

This preliminary risk evaluation consists of the following sections:

- Identification of chemicals of potential concern
- Preliminary exposure assessment
- Identification of potential ARARs
- Hazard evaluation.

In this preliminary evaluation, analytical data are compared to preliminary ARARs and appropriate risk-based criteria to determine if any immediate action is required. It also identifies those areas of potential concern that may require a more detailed quantitative baseline risk assessment.

4.2 Identification of Chemicals of Potential Concern

Identification of chemicals of potential concern follows the guidance given in the Risk Assessment Guidance for Superfund, Vol. I, Human Health Evaluation Manual (HHEM) (U.S. EPA, 1989a).

4.2.1 Data Evaluation Methods

Before analysis of the SI sampling data, the sample results were blank corrected and validated as discussed in Section 2.5. All results were compared to laboratory blanks and field blanks to eliminate results that were present as a result of laboratory or field contamination.

Based on the sampling results, a preliminary list of chemicals of potential concern was developed for each environmental medium tested at NAVSTA San Diego. Each chemical found in soils or groundwater with at least one positive result (i.e., quantitative value above the method detection limit) was included on the preliminary list of chemicals of potential

concern. Chemicals found during the sampling effort were subsequently eliminated from the list of chemicals of potential concern based on the following factors:

- If a chemical was detected only once from a set of at least 20 samples (giving a detected frequency of less than 5 percent) and the data does not suggest a "hot spot" or an area that has numerous chemicals at concentrations greater than the detection limit.

- If a chemical is an essential nutrient, such as iron, calcium, magnesium, sodium and potassium, as recommended by U.S. EPA (U.S. EPA, 1989a).

- If a chemical concentration was within the range of site-specific background levels for inorganic analytes.

The criterion is used to determine if a positive result is an artifact of a sampling or analysis, or an anomalous result not representative of the site conditions. Eliminating chemicals found within background levels is done so that the preliminary risk evaluation addresses only those chemicals possibly related to site activities.

4.2.2 Chemicals of Potential Concern

Chemicals of potential concern in soils and in groundwater are presented in Tables 4.2-1 through 4.2-9. A discussion on the selection of chemicals of potential concern is given below.

Site 2 - Mole Pier. The preliminary list of chemicals of potential concern is presented in Tables 4.2-1 and 4.2-2.

- 2-Methylphenol, 4,4-DDT, 4-methylphenol, acenaphthene, benzoic acid, carbon disulfide, di-N-butylphthalate, dibenzo(a,h)anthracene, dibenzofuran, diethylphthalate, and trichloroethene were detected only once out of 36 soil samples and were eliminated from the list of chemicals of potential concern for Site 2 soils.

- Thallium and zinc concentrations in groundwater were below the level found in the site-specific background sample and were eliminated from the list of chemicals of potential concern for Site 2 groundwater (Table 4.2-2).

Site 3 - Salvage Yard. The preliminary list of chemicals of potential concern is presented in Table 4.2-3. No soil samples were taken during this investigation at Site 3. All of the detected analytes in Site 3 groundwater samples were retained as chemicals of potential concern (Table 4.2-3).

Table 4.2-1

Summary of Soil Data for Site 2 - Mole Pier

(Page 1 of 3)

Compound Name[a]	Units	Frequency of Detection	Maximum Concentration	Minimum Concentration	Background Concentration
1,1,1-Trichloroethane	µg/kg	3/36	8	2	ND
2-Butanone	µg/kg	4/36	400	2	ND
2-Methylnaphthalene	µg/kg	7/36	67,000	2,900	ND
Acetone	µg/kg	15/36	1,200	15	ND
Anthracene	µg/kg	4/36	2,400	170	ND
Benzo(a)anthracene	µg/kg	2/36	5,600	800	ND
Benzo(a)pyrene	µg/kg	2/36	3,100	520	ND
Benzo(b)fluoranthene	µg/kg	3/36	3,100	82	ND
Benzo(g,h,i)perylene	µg/kg	2/36	1,500	480	ND
Benzo(k)fluoranthene	µg/kg	3/36	4,300	120	ND
Bis(2-ethylhexyl)phthalate	µg/kg	4/36	750	96	ND
Chrysene	µg/kg	3/36	5,600	110	ND
Dioxins and furans[b]	ng/kg	4/4	698	6.0	ND
Ethyl benzene	µg/kg	5/36	710	14	ND
Fluoranthene	µg/kg	3/36	15,000	150	ND
Fluorene	µg/kg	4/36	7,400	970	ND
Indeno(1,2,3-c,d)pyrene	µg/kg	2/36	1,300	430	ND

Table 4.2-1

(Page 2 of 3)

Compound Name[a]	Units	Frequency of Detection	Maximum Concentration	Minimum Concentration	Background Concentration
Methylene chloride	µg/kg	4/36	32	10	ND
Naphthalene	µg/kg	7/36	25,000	1,000	ND
PCB-1260	µg/kg	2/36	560	408	ND
Phenanthrene	µg/kg	9/36	13,000	54	ND
Phenol	µg/kg	2/36	180	120	ND
Pyrene	µg/kg	5/36	11,000	63	ND
Toluene	µg/kg	18/36	4,400	2	ND
Xylenes (Total)	µg/kg	4/36	970	23	ND
Antimony	mg/kg	9/36	15.3	4.8	7.7 - 7.9
Arsenic	mg/kg	35/36	5.8	0.46	1.6 - 3.5
Barium	mg/kg	35/36	178	18.9	37.2 - 103
Beryllium	mg/kg	33/36	4.2	0.26	0.20 - 0.98
Chromium	mg/kg	36/36	54.7	2.4	6.2 - 19.1
Cobalt	mg/kg	6/36	16.8	1.3	3.9 - 9.0
Copper	mg/kg	15/36	2,440	3.5	51
Lead	mg/kg	17/36	462	0.71	97.3
Mercury	mg/kg	4/36	4.5	0.09	0.21
Molybdenum	mg/kg	2/36	1.9	1.9	ND
Nickel	mg/kg	19/36	20.6	1.9	6.1 - 6.6

Table 4.2-1

(Page 3 of 3)

Compound Name[a]	Units	Frequency of Detection	Maximum Concentration	Minimum Concentration	Background Concentration
Selenium	mg/kg	2/36	0.3	0.26	ND
Silver	mg/kg	7/36	1.5	0.63	ND
Vanadium	mg/kg	36/36	95.5	11.6	18.9 - 52.9
Zinc	mg/kg	12/36	936	9.1	ND
Diesel	mg/kg	19/36	16,000	10	132
Hydraulic oil	mg/kg	6/36	134	17	ND
Motor oil	mg/kg	8/36	360	14	ND
Stoddard	mg/kg	2/36	185	10	ND

[a]All compounds listed are chemicals of concern.
[b]Total dioxin and furan congener concentrations converted to 2,3,7,8-TCDD equivalents

Tab[illegible]2-2

Groundwater Data Summary and ARARs for Site 2 - Mole Pier

Compound Name[a]	Units	Frequency of Detection	Maximum Concentration	Minimum Concentration	Background Concentration	California Applied Action Levels for Protection of Aquatic Life (AALs) Saltwater	State Water Quality Objectives for Protection of Aquatic Life Saltwater[b]	Federal Water Quality Objectives for Protection of Aquatic Life Saltwater[c]
Benzoic acid	µg/L	5	2	1		ND	ND[d]	ND
PCB-1254	µg/L	1	1	1		ND	0.03	0.03
PCB-1260	µg/L	1	1	1		ND	0.03	0.03
Phenol	µg/L	1	1	1		ND	ND	5,800[e]
Toxaphene	µg/L	1	1	1		ND	0.00002	0.0002[f]
Antimony	µg/L	6	61	22.3		ND	ND	ND
Arsenic	µg/L	4	5.7	1.3	3.8	20	36	13
Barium	µg/L	6	109	28.2	26.7	ND	ND	ND
Cadmium	µg/L	1	11.1	11.1		5	9.3	9.3
Molybdenum	µg/L	7	44.9	8.8	18.4	ND	ND	ND
Silver	µg/L	5	9.1	3.6	7.6	6	ND	2.3[e]
Thallium	µg/L	1	1.3	1.3	6.8	NA[g]	NA	NA
Vanadium	µg/L	5	56	29.5	14.5	ND	ND	ND
Zinc	µg/L	1	38.1	38.1	215	NA	NA	NA
Diesel	µg/L	1	410	410		ND	ND	ND
Hydraulic oil	µg/L	1	280	280		ND	ND	ND
Motor oil	µg/L	5	2080	680		ND	ND	ND

[a]Thallium and zinc are not chemicals of potential concern because the concentrations of these chemicals are below background.
[b]Four-day or daily average.
[c]Chronic criteria unless otherwise noted.
[d]ND = no data.
[e]Acute criteria.
[f]Pentavalent.
[g]NA = not applicable. This chemical is not a chemical of concern.

KN/WP388.4B/1-30-92/D2

Table 4.2-3

Groundwater Data Summary and ARARs for Site 3 - Salvage Yard

Compound Name[a]	Units	Frequency of Detection	Maximum Concentration	Minimum Concentration	Background Concentration	California Applied Action Levels for Protection of Aquatic Life (AALs) Saltwater	State Water Quality Objectives for Protection of Aquatic Life Saltwater[b]	Federal Water Quality Objectives for Protection of Aquatic Life Saltwater[c]
1,1-Dichloroethane	µg/L	1	6	6				
1,2-Dichloroethene (Total)	µg/L	1	2	2				224,000[b]
Benzene	µg/L	5	180	7		1		700
Carbon disulfide	µg/L	2	8	6				
Antimony	µg/L	3	69.5	66.3				
Arsenic	µg/L	2	13	5.1		20	36	13[e]
Barium	µg/L	3	95.6	69.3				
Cadium	µg/L	1	13.4	13.4		5	9.3	9.3
Chromium	µg/L	1	5.1	5.1		2	50[d]	50[d]
Cobalt	µg/L	1	5.2	5.2		6	2.9[e]	2.9
Molybdenum	µg/L	3	22.8	7.7				
Nickel	µg/L	1	13.7	13.7		8	8.3	8.3
Vanadium	µg/L	1	60.8	60.8				
Diesel	µg/L	1	260	260				

[a]All chemicals listed are chemicals of concern.
[b]Four-day or daily average.
[c]Chronic criteria unless otherwise noted.
[d]Hexavalent.
[e]One-hour average.

Table 4.2-4
Summary of Soil Data for Site 4 - DPDO Salvage Yard

Compound Name*	Units	Frequency of Detection	Maximum Concentration	Minimum Concentration	Background Concentration
Acenaphthylene	µg/kg	1/28	80	80	
Acetone	µg/kg	2/28	39	11	
Alpha-chlordane	µg/kg	1/28	180	180	
Anthracene	µg/kg	1/28	51	51	
Benzo(a)anthracene	µg/kg	2/28	220	110	
Benzo(a)pyrene	µg/kg	3/28	740	310	
Benzo(b)fluoranthene	µg/kg	2/28	680	360	
Benzo(g,h,i)perylene	µg/kg	3/28	380	150	
Benzo(k)fluoranthene	µg/kg	2/28	490	450	
Benzoic acid	µg/kg	3/28	160	43	
Bis(2-ethylhexyl)phthalate	µg/kg	4/28	2,600	65	
Carbon disulfide	µg/kg	10/28	370	1	
Chrysene	µg/kg	3/28	460	320	
Dibenz(a,h)anthracene	µg/kg	2/28	91	88	
Diethylphthalate	µg/kg	2/28	91,000	78	
Fluoranthene	µg/kg	4/28	480	120	
Gamma-chlordane	µg/kg	1/28	170	170	
Indeno(1,2,3-c,d)pyrene	µg/kg	2/28	280	240	
Phenanthrene	µg/kg	1/28	200	200	

Table 4.2-4

(Page 2 of 2)

Compound Name*	Units	Frequency of Detection	Maximum Concentration	Minimum Concentration	Background Concentration
Pyrene	µg/kg	4/28	1,200	100	
Antimony	mg/kg	2/28	33.7	6	7.9
Arsenic	mg/kg	25/28	16.6	0.86	1.6 - 2.9
Barium	mg/kg	27/28	291	14.4	37.2 - 103
Beryllium	mg/kg	28/28	6.3	0.33	0.20 - 0.98
Cadmium	mg/kg	3/28	3.9	1.9	
Chromium	mg/kg	28/28	67.3	2.4	3.3 - 14.6
Cobalt	mg/kg	27/28	16.2	1.5	2.1 - 9.0
Copper	mg/kg	6/28	466	136	
Lead	mg/kg	11/28	3,280	7.5	0.64
Mercury	mg/kg	10/28	0.79	0.16	
Molybdenum	mg/kg	11/28	5.9	1.9	
Nickel	mg/kg	17/28	30.7	2.2	6.6
Selenium	mg/kg	2/28	0.65	0.54	
Thallium	mg/kg	10/28	0.55	0.2	
Vanadium	mg/kg	28/28	92.8	5	18.9 - 52.9
Zinc	mg/kg	4/28	727	33.5	
Diesel	mg/kg	3/28	40	20	

*All chemicals listed are chemicals of potential concern.

Table 4.2-5

Groundwater Data Summary and ARARs for Site 4 - DPDO Salvage Yard

Compound Name	Units	Frequency of Detection	Maximum Concentration	Minimum Concentration	Background Concentration	California Applied Action Levels for Protection of Aquatic Life (AALs) Saltwater	State Water Quality Objectives for Protection of Aquatic Life Saltwater[a]	Federal Water Quality Objectives for Protection of Aquatic Life Saltwater[b]
Carbon disulfide	µg/L	1	5	5		ND[c]	ND	ND
Trichloroethene	µg/L	1	55	55		ND	ND	2,000[a]
Antimony	µg/L	2	45.6	43.6		ND	ND	ND
Barium	µg/L	3	96.2	71.1	98	NA[d]	NA	NA
Beryllium	µg/L	1	1	1		ND	ND	ND
Cadmium	µg/L	1	8.7	8.7		5	9.3	9.3
Molybdenum	µg/L	2	24.5	24.5	60.6	NA	NA	NA
Selenium	µg/L	1	10	10		ND	71	54
Silver	µg/L	1	6.7	6.7	4.6	6	ND	2.3[a]
Thallium	µg/L	1	11	11	12	NA	NA	NA
Stoddard	µg/L	1	880	880		ND	ND	ND

[a]Four-day or daily average.
[b]Chronic criteria unless otherwise noted.
[c]ND - no data.
[d]NA - not applicable. This chemical is not a chemical of concern.

Table 4.2-6

Summary of Soil Data for Site 7 - Sewer Plant Site

(Page 1 of 3)

Compound Name[a]	Units	Frequency of Detection	Maximum Concentration	Minimum Concentration	Background Concentration
1,2,4-Trichlorobenzene	µg/kg	2/26	160	120	
1,4-Dichlorobenzene	µg/kg	7/26	510	57	
2-Butanone	µg/kg	7/26	83	12	
2-Methylnaphthalene	µg/kg	9/26	1,900	46	
3,3'-Dichlorobenzidine	µg/kg	1/26	81	81	
4,4'-DDE	µg/kg	9/26	290	26	
4-Chloroaniline	µg/kg	11/26	2,600	100	
Acenaphthene	µg/kg	6/26	130	48	
Acetone	µg/kg	3/26	340	36	
Anthracene	µg/kg	4/26	260	62	
Benzo(a)anthracene	µg/kg	5/26	490	98	
Benzo(a)pyrene	µg/kg	4/26	310	60	
Benzo(b)fluoranthene	µg/kg	6/26	390	96	
Benzo(g,h,i)perylene	µg/kg	1/26	110	110	
Benzo(k)fluoranthene	µg/kg	2/26	340	310	
Bis(2-ethylhexyl)phthalate	µg/kg	18/26	16,000	46	
Carbon disulfide	µg/kg	6/26	31	2	
Chrysene	µg/kg	8/26	580	74	

Table 4.2-6

Compound Name[a]	Units	Frequency of Detection	Maximum Concentration	Minimum Concentration	Background Concentration
Di-n-octylphthalate	µg/kg	4/26	340	160	
Diethylphthalate	µg/kg	2/26	500	160	
Ethyl benzene	µg/kg	2/26	48	6	
Fluoranthene	µg/kg	11/26	1,300	47	
Fluorene	µg/kg	5/26	210	110	
Indeno(1,2,3-c,d)pyrene	µg/kg	3/26	160	40	
Naphthalene	µg/kg	3/26	530	77	
PCB-1254	µg/kg	11/26	2,300	260	
Phenanthrene	µg/kg	9/26	1,300	150	
Pyrene	µg/kg	12/26	1,200	57	
Toluene	µg/kg	5/26	44	2	
Total cyanide	µg/kg	2/26	1	1	
Trichloroethene	µg/kg	2/26	4	1	
Xylenes (total)	µg/kg	8/26	290	5	
Antimony	mg/kg	6/26	9.4	4.7	4.9
Arsenic	mg/kg	26/26	4.8	0.67	2.5 - 4.8
Barium	mg/kg	26/26	239	24.5	79.5 - 349
Cadmium	mg/kg	7/26	5	1.6	
Chromium	mg/kg	26/26	85.4	6.9	2.9 - 18.7

Table 4.2-6

Compound Name*	Units	Frequency of Detection	Maximum Concentration	Minimum Concentration	Background Concentration
Cobalt	mg/kg	26/26	19.8	3.6	2.0 - 12.6
Copper	mg/kg	19/26	98.3	4.4	2.1
Lead	mg/kg	22/26	106	1.5	ND
Mercury	mg/kg	11/26	1.8	0.22	ND
Molybdenum	mg/kg	5/26	2.8	1.9	ND
Nickel	mg/kg	24/26	24.8	2	4.8 - 9.0
Silver	mg/kg	12/26	16.5	0.7	
Vanadium	mg/kg	26/26	85	19.2	10.8 - 55.2
Zinc	mg/kg	15/26	253	15.8	ND

*All chemicals listed are chemicals of concern.

Table 4.2-7

Groundwater Data Summary and ARARs for Site 7 - Sewer Plant Site

Compound Name[a]	Units	Frequency of Detection	Maximum Concentration	Minimum Concentration	Background Concentration	California Applied Action Levels for Protection of Aquatic Life (AALs) Saltwater	State Water Quality Objectives for Protection of Aquatic Life Saltwater[b]	Federal Water Quality Objectives for Protection of Aquatic Life Saltwater[c]
1,1,1-Trichloroethane	µg/L	1	3	3		ND	ND	31,200[b]
Acetone	µg/L	1	22	22		ND	ND	ND
Carbon tetrachloride	µg/L	1	9	9		ND	ND	50,000[b]
Antimony	µg/L	2	64	42.2		ND	ND	ND
Arsenic	µg/L	1	2.7	2.7	19.4	NA	NA	NA
Barium	µg/L	2	80.9	80.8	11.9	ND	ND	ND
Beryllium	µg/L	1	1.6	1.6	1.3	ND	ND	ND
Chromium	µg/L	1	6	6		2	50[e]	50[e]
Molybdenum	µg/L	1	22.8	22.8	13.2	ND	ND	ND
Nickel	µg/L	1	13.3	13.3		8	8.3	8.3
Selenium	µg/L	2	14	1		ND	71	54
Silver	µg/L	2	8.3	4.4	3	6	ND	2.3[b]
Vanadium	µg/L	2	65.5	30.2	113	NA	NA	NA
Zinc	µg/L	2	73.6	29.9	46.8	10	86	86

[a]Arsenic and vandium are not chemicals of concern.
[b]Four-day or daily average.
[c]Chronic criteria unless otherwise noted.
[d]Acute criteria.
[e]Hexavalent.

Table 4.2-8

Summary of Soil Data for Site 8 - Fire Fighter Training Facility

(Page 1 of 2)

Compound Name[a]	Units	Frequency of Detection	Maximum Concentration	Minimum Concentration	Background Concentration
2-Methylnaphthalene	µg/kg	1/8	1,800	1,800	
Acetone	µg/kg	2/8	73	17	
Dioxins and Furans[b]	ng/kg	1/3	0.02	0.02	
Fluorene	µg/kg	1/8	62	62	
Naphthalene	µg/kg	1/8	550	550	
Phenanthrene	µg/kg	1/8	51	51	
Arsenic	mg/kg	8/8	4.6	1.5	0.53 - 2.0
Barium	mg/kg	7/8	117	13	27.7
Beryllium	mg/kg	7/8	1.4	0.31	0.29 - 1.1
Chromium	mg/kg	8/8	15.7	2.9	3.0 - 7.7
Cobalt	mg/kg	7/8	9.1	1.7	1.2 - 3.7
Lead	mg/kg	6/8	13.3	1.5	2.7
Mercury	mg/kg	1/8	0.72	0.72	ND
Nickel	mg/kg	2/8	5.4	2.3	ND
Silver	mg/kg	1/8	1.2	1.2	
Thallium	mg/kg	2/8	0.78	0.5	ND
Vanadium	mg/kg	8/8	52.9	7.6	10.7 - 23.0
Zinc	mg/kg	2/8	37.6	31	ND
Diesel	mg/kg	1/8	680	680	

Table 4.2-8

(Page 2 of 2)

Compound Name[a]	Units	Frequency of Detection	Maximum Concentration	Minimum Concentration	Background Concentration
JP-4	mg/kg	1/8	730	730	
JP-5	mg/kg	1/8	650	650	

[a]All chemicals listed are chemicals of concern.
[b]Total dioxin and furan congeners concentrations converted to 2,3,7,8-TCDD equivalents

Table 4.2-9

Groundwater Data Summary and ARARs for Site 8 - Fire Fighter Training Facility

(Page 1 of 2)

Compound Name[a]	Units	Frequency of Detection	Maximum Concentration	Minimum Concentration	California Applied Action Levels for Protection of Aquatic Life (AALs) Saltwater	State Water Quality Objectives for Protection of Aquatic Life Saltwater[b]	Federal Water Quality Objectives for Protection of Aquatic Life Saltwater[c]
1,1-Dichloroethane	µg/L	2	30	4	ND[d]	ND	ND
1,2-Dichloroethene (total)	µg/L	1	21	21	ND	ND	224,000[b]
2-Methylnaphthalene	µg/L	1	7	7	ND	ND	ND
Benzene	µg/L	5	180	7	1	ND	700
Bis(2-ethylhexyl)phthalate	µg/L	1	1	1	ND	ND	ND
Carbon disulfide	µg/L	2	3	1	ND	ND	ND
Chloroethane	µg/L	1	6	6	ND	ND	ND
Ethyl benzene	µg/L	2	12	2	ND	ND	430[b]
Fluorene	µg/L	2	2	1	ND	ND	ND
Phenol	µg/L	4	16	4	ND	ND	5,800[b]
Toluene	µg/L	3	2	1	20	ND	5,000
Vinyl Chloride	µg/L	1	8	8	ND	ND	ND
Xylenes (total)	µg/L	1	6	6	70	ND	ND
Antimony	µg/L	7	62.8	25.8	ND	ND	ND
Arsenic	µg/L	6	4.5	1.1	20	36	13[e]
Barium	µg/L	7	643	72	ND	ND	ND
Chromium	µg/L	2	4.4	4.1	2	50[e]	50[e]
Copper	µg/L	2	7.4	7	6	2.9[f]	2.9
Molybdenum	µg/L	5	24.7	8.5	ND	ND	ND
Nickel	µg/L	2	10.1	9.8	8	8.3	8.3

Table 4.2-9

(Page 2 of 2)

Compound Name[a]	Units	Frequency of Detection	Maximum Concentration	Minimum Concentration	California Applied Action Levels for Protection of Aquatic Life (AALs) Saltwater	State Water Quality Objectives for Protection of Aquatic Life Saltwater[b]	Federal Water Quality Objectives for Protection of Aquatic Life Saltwater[c]
Silver	µg/L	3	8.9	5	6	ND	2.3[d]
Thallium	µg/L	2	5.8	1	ND	ND	2,130[d]
Vanadium	µg/L	6	83.2	15.2	ND	ND	ND
Zinc	µg/L	5	43.1	13.6	10	86	86
Diesel	µg/L	4	6,370	350	ND	ND	ND
JP-4	µg/L	5	3,460	350	ND	ND	ND
JP-5	µg/L	4	2,630	250	ND	ND	ND

[a]All chemicals listed are chemicals of concern.
[b]Four-day or daily average.
[c]Chronic criteria, unless otherwise noted.
[d]ND - no data.
[e]Pentavalent.
[f]One-hour average.

Site 4 - DPDO Storage Yard. The preliminary list of chemicals of potential concern is presented in Tables 4.2-4 and 4.2-5.

- 2-Butanone, 4,4-DDE, 4,4-DDT, toluene, xylenes, and silver were detected only once out of 28 soil samples and were eliminated from the list of chemicals of potential concern for Site 4 soils.

- Acenaphthylene, alpha-chlordane, anthracene, gamma-chlordane, and phenanthrene were also detected in only one soil sample. However, they were all detected in sample NS4-SS1-S01, along with several other semivolatile organic compounds, suggesting a hot spot at this sample point. These chemicals will be retained as chemicals of potential concern.

- Barium, molybdenum, and thallium concentrations in groundwater were below the level found in the site-specific background sample and were eliminated from the list of chemicals of potential concern for Site 4 groundwater (Table 4.2-5).

Site 7 - Sewer Plant Site. The preliminary list of chemicals of potential concern is presented in Tables 4.2-6 and 4.2-7.

- 1,2-Dichlorobenzene, 4-methyl-2-pentanone, 4-methylphenol, di-N-butylphthalate, endosulfan I, endrin, and selenium were detected only once out of 26 soil samples and were eliminated from the list of chemicals of potential concern for Site 7 soils. Arsenic and barium concentrations in soils were below the levels found in the site-specific background samples and were also eliminated from the list.

- 3,3-Dichlorobenzidine and benzo(g,h,i)perylene were also detected in only one soil sample. However, they were detected in sample NS7-BH2-503-15, along with several other semivolatile organic compounds, suggesting a hot spot. These chemicals will be retained as chemicals of potential concern.

- Arsenic and vanadium concentrations in groundwater were below the level found in the site-specific background sample and were eliminated from the list of chemicals of potential concern for Site 7 groundwater (Table 4.2-7).

Site 8 - Fire Fighter Training Facility. The preliminary list of chemicals of potential concern is presented in Tables 4.2-8 and 4.2-9. All detected analytes in Site 8 soils and groundwater were retained as chemicals of potential concern.

Evaluation of Dioxin and Furan Data. Site 2 and Site 8 soils were analyzed for polychlorinated dibenzo-p-dioxins (PCDD) and polychlorinated dibenzofuran (PCDF) (dioxins

and furans). There are 75 possible PCDD congeners and 135 possible PCDF congeners. Procedures for estimating the risks associated with exposures to mixtures of these chemicals are based on implications from toxicity data that the toxicities of the 135 congeners of PCDFs and the remaining 74 of the 75 PCDD congeners are quantitatively related to 2,3,7,8-tetrachlorinated dibenzo-p-dioxin (2,3,7,8-TCDD).

Only 2,3,7,8-TCDD has a toxicity value published by U.S. EPA. A wide range of responses are known to occur at exceptionally low doses of this particular dioxin congener. There is, however, relatively little information on the toxicities of the 135 congeners of PCDFs and the remaining 74 PCDD congeners. Poland and Colleagues (1979) developed a hypothesis that emphasized the importance of chlorine substitutes at the lateral positions (i.e., the 2,3,7, and 8 positions) of the triple-ring structure of the dibenzo-p-dioxin molecule. These authors stated that compounds that are substituted in the 2,3,7 and 8 positions are far more toxic than compounds that are not substituted in these positions. Research indicates that there is a strong, structurally-related basis to the activity of compounds based on the position and extent of chlorination. Dioxin and furan congeners that have chlorine substituents in the 2,3,7, and 8 positions are often a thousandfold more toxic than compounds that are not substituted in these positions (Davis and Safe, 1988; U.S. EPA, 1989b; Holcomb et al., 1988; Kociba and Cabey, 1985; Mason et al., 1985; and Poland and Knutson, 1982).

The congeners can be divided into classes depending on the position and extent of chlorination. Based on various toxicological endpoints, each class is rated for its relative toxicity in comparison with 2,3,7,8-TCDD. The relative toxicity of each congener or group of congeners is expressed as a "toxicologically equivalent amount" of 2,3,7,8-TCDD. This concept coupled with evaluations of the structure-activity relationships forms the basis of the toxicity equivalence factor (TEF) approach. The U.S. EPA published interim procedures for estimating the risks associated with exposures to mixtures of PCDFs and PCDDs based on TEFs derived by the North Atlantic Treaty Organization Committee on the Challenges to Modern Society (U.S. EPA, 1989b).

No 2,3,7,8-TCDD was detected in the soils in Site 2 or Site 8. However, several other congeners or congener groups were detected. Most of the analytical results were not congener-specific, and only total concentrations for each homologous group were reported. Of necessity, these were assumed to be the 2,3,7,8 arrangement that was not specified by the

laboratory. The U.S. EPA-sanctioned TEFs were used to convert measured congener concentrations to "2,3,7,8-TCDD equivalents" by the following formula:

$$Ceq = (Cc)(TEF)$$

where:

Ceq = Concentration in 2,3,7,8-TCDD equivalents (nanogram [ng/kg])
Cc = Measured congener concentration (ng/kg)
TEF = Toxicity equivalence factor for dioxins and furans (U.S. EPA, 1989b).

The measured congener concentrations, TEFs, and 2,3,7,8-TCDD equivalents are listed in Table 4.2-10.

4.2.3 Uncertainties

There are two primary factors contributing to the uncertainty in determining chemicals of potential concern at NAVSTA San Diego:

- The selection of representative background concentrations for inorganics in the soil and groundwater was limited by the heterogeneity of the site and the small number of site-specific background samples.
- The elimination of certain compounds because of their infrequent detection raises uncertainty as to whether these compounds may actually be present elsewhere but have not been found.

The procedures used were designed by the U.S. EPA (U.S. EPA, 1989a) and applied here to result in a health-protective list of all chemicals that may be present at the site while allowing for the elimination of chemicals that should not be considered of concern. Health-protective procedures include the inclusion of chemicals detected only once in soil samples taken from potential hot spots.

4.3 Preliminary Exposure Assessment

The preliminary exposure assessment identifies potential receptor populations based on review of available demographic data and current and potential future land-use information. The assessment also identifies potential migration and exposure pathways for site-related chemicals.

4.3.1 Receptor Survey

The objective of the receptor survey is to identify potential human populations that may be exposed to site-related chemicals. The survey includes a review of current and potential

Table 4.2-10

Results of Dioxin and Furan Analysis Converted to 2,3,7,8-TCDD Equivalents

		Measured Concentration (ng/kg)						
		Site 2 Soils				Site 8 Soils		
Somer[a]	TEF	BH2-S04-10-15	BH-S03-10	BH5-S03-5-10	BH5-S04-5-10	BH2-S01-10-15	BH3-S03-10-15	BH3-S07-10-15
2,3,7,8-TCDD	1	ND[b]	ND	ND	ND	ND	ND	ND
2,3,7,8-PeCDD	0.5	ND	107	ND	ND	ND	ND	ND
2,3,7,8-HxCDD	0.10	100	810	ND	ND	ND	ND	ND
2,3,7,8-HpCDD	0.01	223	3990	5.6	7.2	ND	ND	ND
OCDD	0.001	665	10,400	13.2	12.2	ND	ND	ND
2,3,7,8-TCDF	0.10	468	1230	15.7	14.2	ND	ND	ND
2,3,4,7,8,-PeCDF	0.50	461	737	9.9	8.5	ND	ND	ND
2,3,7,8-HxCDF	0.10	363	195	3.6	2	ND	ND	0.23
2,3,7,8-HpCDF	0.01	220	220	ND	1.8	ND	ND	ND
OCDF	0.001	47.6	66.4	ND	ND	ND	ND	ND
Total 2,3,7,8-TCDD Equivalents		329	698	6.95	5.97	0	0	0.02

[a]All congeners assumed to be in 2,3,7,8 arrangement unless specified by laboratory
[b]ND = not detected
TEF values from U.S. EPA 1989 (x)

KN/WP388.4J/02-04-92/D1

future land-use and considers the relationship between land-use and the presence of potential receptor populations.

Land Use. NAVSTA is located within San Diego County and the San Diego metropolitan area, approximately 3 miles southeast of the city center and 10 miles north of the border between the United States and Mexico. The approximate boundaries of the NAVSTA are City of San Diego to the north, National City to the east and south, and San Diego Bay to the west. Land use at NAVSTA includes facilities for operations and maintenance, supply, training, administration, medical/training, housing, community services, community support, community retail, recreation, miscellaneous, and parking (WESTDIV, 1985).

The land bordering NAVSTA to the north and south is industrial, and the Barrio Logan area to the east and northeast consists of mixed-use residential, commercial and industrial zones. There are also some scattered open spaces, and recreation areas on the bayfront near NAVSTA. The population of San Diego County was projected to be approximately 2.2 million in 1990, and 2.5 million by the year 2000 (WESTDIV, 1985).

Identification of Potential Receptor Populations. The purpose of this section is to identify those populations that may be exposed to site-related chemicals. For an exposure to a human receptor to occur, site-related chemicals must migrate from a source to a point where a human receptor may potentially contact the chemical. Exposure may occur through dermal contact, inhalation, or ingestion. The preliminary assessment is limited to the identification of potential receptor populations and the relationship between these potential receptor populations to identified migration and exposure pathways and points of exposure. Quantitative evaluation of potential source-migration pathway-receptor scenarios will be addressed in a quantitative baseline risk assessment, if required.

Generally, receptor populations are divided into two groups: on-site and off-site receptors. On-site receptors may reside at NAVSTA or may be "occupational" populations including station personnel working full-time at NAVSTA, and those individuals who use any of the training, medical, recreation, or community facilities at NAVSTA. The NAVSTA population was reported to be 39,203 military and 5258 civilian, with 3117 unmarried personnel housed on base (WESTDIV, 1987). There is no family housing, but there are child care and recreational facilities at NAVSTA (WESTDIV, 1985).

Land surrounding NAVSTA includes residential, commercial, and industrial areas, as well as a few bayfront recreational areas nearby. Potential off-site receptor populations could include people who work, live, or use the recreational facilities in the area surrounding NAVSTA.

The future development of the NAVSTA area includes plans for renovating or replacing older buildings, constructing additional personnel housing, expanding the recreational and community service facilities, and improving access and internal traffic flow at NAVSTA (WESTDIV, 1987). Therefore, potential future receptor populations are not expected to be different, (i.e., residential versus occupational, etc.) from present receptor populations.

Environmental Receptors. The terrestrial environment at NAVSTA San Diego represents a controlled ecosystem. Vegetation consists primarily of shrubs, trees, or grasses that have been planted for the purposes of aesthetics or landscaping. Other areas consist of various ruderal species or early successional plants that have colonized disturbed areas of the Station. Wildlife at the NAVSTA consists of animals adapted to surviving in this type of environment. These organisms would include gophers, ground squirrels, mice, rats, and birds. These types of organisms are usually considered pest organisms, and protection of these organisms is not considered to be of importance to the environment.

The Paradise Creek/Sweetwater River Complex is located approximately 1.5 miles south of NAVSTA (WESTDIV, 1985). Various types of wetland birds inhabit this area and some may be found occasionally at NAVSTA San Diego. However, given the amount of activity taking place at NAVSTA, it is unlikely that these birds would spend a significant amount of time at NAVSTA relative to other areas that do not maintain such high levels of human activity.

Aquatic (estuarine and saltwater) organisms inhabit the waters of Paleta Creek and San Diego Bay. These populations may be exposed to site-related chemicals migrating into these waters.

4.3.2 Migration Pathway Analysis

This section describes the potential pathways related to chemical transport that may result in potential exposure points for human or environmental receptors. In general, the major routes of migration from a site such as NAVSTA San Diego are via air, surface water runoff, or leaching into and through groundwater. Each of these pathways is discussed below.

4.3.2.1 Air Pathway

Site-related compounds in soils may be released via volatilization. This could result in potential exposures to human receptors via inhalation. This migration pathway is limited to volatile organic compounds found in the surface soils.

Particulate-bound chemicals may also be transported through soil erosion or generation of fugitive dust. This pathway is limited to compounds that have a high affinity for soils and a low vapor pressure, thus reducing the possibility of volatilization. This migration pathway is also limited to chemicals found in the surface soils.

4.3.2.2 Surface Water Runoff

Rain events may result in the erosion of soil containing site-related chemicals into runoff water. Surface water runoff at the DPDO Storage Yard flows toward a drainage ditch that forms the western boundary of the site. The ditch flows in a southwesterly direction and empties into Paleta Creek at the southwest corner of the site. Runoff from Mole Pier drains either into Paleta Creek or directly into San Diego Bay. At the Sewer Plant Site, surface water runoff is towards San Diego Bay. Before 1988, surface water runoff at the Fire Fighter Training Facility drained into San Diego Bay. Runoff is now contained and flows through an oil/water separator before it is discharged into a sanitary sewer (Department of Navy, 1989).

Surface water runoff is likely during periods of heavy rains. During runoff, contaminants may be deposited into the sediments of Palata Creek and San Diego Bay. Palata Creek empties into San Diego Bay at Mole Pier. Visual observations indicate that bay water flows up Palata Creek beyond the DPDO Storage Yard during rising tides and reverses direction when the tides recede (NEESA, 1988).

4.3.2.3 Groundwater

Migration of soil contaminants to groundwater could occur from infiltration and percolation of rainwater through the soil. The extent of contaminant migration depends primarily on the amount of rainfall, evaporation, solubility of the chemical in water, the chemical absorption coefficient, and distance to the groundwater. In general, VOCs travel more easily through soils than semivolatile organic compounds (like the high-boiling fuel hydrocarbons). Solubility of metals is dependent on the metal species and is difficult to generalize. The groundwater is approximately 10 feet below the land surface (NEESA, 1988). Groundwater underlying NAVSTA discharges into either Palata Creek or directly into San Diego Bay.

4.3.3 Identification of Exposure Pathways

Potential human exposure may occur by primary pathways, (e.g., dermal contact, inhalation, or direct consumption of soil or water), or through secondary pathways involving the transfer of site-related chemicals through the food chain.

4.3.3.1 Primary Pathways

Exposure to site-related chemicals in soils via primary pathways may result from dermal contact, inadvertent ingestion of soils, inhalation of organic vapors, or fugitive dust. Dermal contact with soils may result in absorption of organic chemicals through the skin. Inadvertent ingestion of soils may result from soils adhering to the skin and then being ingested as a result of hand-to-mouth behavior. Volatile organics in the soils may vaporize resulting in exposure of a receptor via inhalation. However, this would be limited to compounds that are near the soil surface. Chemicals absorbed to windborne particulates from a site may also be inhaled by a potential receptor.

There are no groundwater wells located at NAVSTA San Diego (WESTDIV, 1985). Groundwater underlying NAVSTA is not considered to be potable (Section 4.4.2). Therefore, it is unlikely that a receptor would be exposed via drinking water.

The groundwater discharges into Palata Creek and San Diego Bay. The recreational use in these areas is restricted as a result of military security needs and the heavy Naval traffic from the shipyard. Therefore, it is unlikely that a human receptor would be exposed to site-related chemicals in the near-shore waters. Given the size of San Diego Bay, chemicals that migrate into the off-shore waters of San Diego Bay would become diluted to concentrations well below the limits of detection. Therefore, it is unlikely that individuals using these off-shore waters for recreational purposes would have significant intakes of site-related chemicals.

Given the restricted use of groundwater and near-shore surface waters, it is unlikely that a human receptor would come in direct contact with elevated concentrations of site-related chemicals in water. Therefore, exposure of humans via primary exposure pathways will not be considered in this hazard assessment.

These waters may serve as a potential water source for wildlife in the area. However, given the brackish water found in this area, the high level of human activity, and the presence of fresh waters in the region, it is unlikely that the wildlife would frequently use these areas for

watering. Aquatic populations that inhabit these waters may be exposed to site-related chemicals in groundwater.

The site-specific primary exposure pathways for each site is discussed below. Primary exposure pathways for both human and environmental receptors are addressed.

Site 2 - Mole Pier. Potential human receptors at Mole Pier include base personnel using the playing fields, navy personal working at Mole Pier, and construction or maintenance crews working in excavations at the site. All of these potential receptors may be exposed via incidental ingestion of the soils, inhalation of fugitive dust, and exposure via inhalation of organic vapors from volatile organics. Individuals working in nearby areas surrounding this site may be exposed via inhalation of fugitive dust.

Chemicals in surface soils may be transported to Palata Creek during rain events. Transport of these soils to the sediment of the creek may result in exposure of benthic (bottom dwelling) organisms in the creek.

The compounds present in the soil may leach into groundwater. Groundwater at this site discharges into Palata Creek. Therefore, aquatic populations in Palata Creek and San Diego Bay may be exposed to site-related chemicals.

Sites 3, 4, 7 and 8. Site 3 (Salvage Yard), Site 4 (DPDO Storage Yard), Site 7 (Sewer Plant Site), and Site 8 (Fire Fighter Training Facility) are similar in that potential chemicals of concern in soils are limited to subsurface soils that are covered with either clean soils or asphalt. Sites 3, 4, and 7 are paved. Site 7 is partially paved, and the remainder of the site is covered with a soil/gravel mix. Because these sites are covered, it is unlikely that an individual working in the area would be exposed unless that individual is working within an excavation. Such an individual may be exposed via direct dermal contact, inadvertent ingestion of soils, and inhalation of volatile organics vaporizing from the soils.

Because the chemicals present in the soils are limited to subsurface soils, it is unlikely that potential receptor populations would be limited to individuals working within an excavation. There are no planned major changes in the land use at these sites (WESTDIV, 1987).

The compounds present in the soils may leach into groundwater. Groundwater at these sites discharge either into Palata Creek or San Diego Bay. Therefore, aquatic populations in Palata Creek and San Diego Bay may be exposed to site-related chemicals.

4.3.3.2 Secondary Pathways

Secondary pathways may include bioaccumulation of chemicals into fish or game and exposure via consumption of these organisms. Groundwater underlying the sites discharges either into San Diego Bay or into Palata Creek, which feeds into San Diego Bay. Given the size of San Diego Bay, chemicals being discharged into the bay via groundwater will become diluted to levels well below the detection limit within a short distance from the point of discharge. Therefore, organisms that bioaccumulate site-related chemicals would be limited to sessile and benthic organisms that would either live attached to the piers or on the bottom of the bay near the piers. The commercial and private harvesting of marine animals such as shellfish is generally restricted in the areas of marinas and shipyards because of the poor water quality usually associated with these types of operations (Marcus and Thompson, 1986). Therefore, it is unlikely that human receptors will be exposed via consumption of fish harvested in San Diego Bay. Environmental receptors, such as piscivoric (fish-eating) birds, may be exposed as a result of feeding on marine life in the area.

4.4 Identification of Potential ARARs

The investigation is being conducted pursuant to the Comprehensive Environmental Response, Compensation, and Liability Act (CERCLA) and in conformance with the guidelines, criteria, and considerations set forth in the National Contingency Plan (NCP) and the Superfund Amendments and Reauthorization Act (SARA). Consistent with the CERCLA/SARA/NCP framework is the requirement that the remedial action process must comply with all legal ARARs. Applicable requirements are those federal and state requirements that would apply to conditions at a CERCLA site under any circumstance. Federal statutes that are specifically cited in CERCLA include the Toxic Substances Control Act (TSCA), the Safe Drinking Water Act (SDWA) , the Clean Air Act (CAA), the Clean Water Act (CWA), and the Marine Protection Research and Sanctuaries Act. Relevant and appropriate requirements are those federal and state human health and environmental requirements that apply to circumstances sufficiently similar to those encountered at CERCLA sites. In such cases, application of these requirements would be appropriate although not mandated by law. Relevant and appropriate requirements are intended to carry the same weight as legally applicable requirements.

The agency has also identified certain guidance as to-be-considered (TBC) material. TBCs are nonpromulgated advisories or guidance issued by federal or state government that are not legally binding and do not have the status of potential ARARs. In some circumstances, TBCs will be used to estimate acceptable risk-based concentrations of chemicals in different media based on the scenarios and formulas put forth in the ARAR documents.

U.S. EPA has provided general guidance on the overall application of the ARARs concept into the RI/FS process (U.S. EPA, 1988a). More specific guidance on compliance with ARARs has also been provided by U.S. EPA (U.S. EPA, 1987a; U.S. EPA, 1988a; U.S. EPA, 1989c). In accordance with this guidance, ARARs are to be progressively identified and applied on a site-specific basis as the RI/FS proceeds. The initial step in the process entails the survey of all potential ARARs for the remedial action process at the subject site. The potential ARARs considered for NAVSTA San Diego were categorized into the following U.S. EPA-recommended classifications:

- Chemical-specific ARARs are usually health- or risk-based numerical values or methodologies, which when applied to site-specific conditions, result in the establishment of numerical values for each chemical of concern. These values establish the acceptable amount or concentration of a chemical that may be found in or discharged to the ambient environment.

- Location-specific ARARs are restrictions placed on the concentration of a chemical or the conduct of activities solely because they occur in special locations.

- Action-specific ARARs are usually technology- or activity-based requirements or limitations on actions taken with respect to waste management and site cleanup.

The next step in the ARARs process is the integration of the statutory and regulatory requirements with site-specific factors to evaluate whether a site is currently in compliance with all public health and environmental standards. Chemical-specific ARARs were selected based on the exposure pathway analysis.

The degree to which site-specific factors are incorporated into the ARAR development process varies considerably. In the case of hazardous chemicals, the evaluation of site-specific factors is an integral part of the ARARs process even when prerequisites based on statutory or regulatory requirements exist (U.S. EPA, 1988b). As an example, for Maximum Contaminant Levels (MCL) promulgated under the SDWA to be considered as ARARs at a site, the surface water or groundwater media under consideration should be demonstrated to

be potable and utilized as drinking water, either currently or at some planned future date. Flexibility is also provided in modifying a standard, such as an MCL, based on evidence that site-specific factors are different than those used in the derivation of the MCLs.

For chemicals for which ARARs are not available, U.S. EPA has provided guidance on the use and application of TBCs, such as carcinogenic potency factors (CPFs) or reference doses (RfDs) (U.S. EPA, 1987a; U.S. EPA, 1988a; U.S. EPA, 1989c). Although, not actually ARARs, these data may be used to determine risk-based acceptable concentrations for chemicals in various environmental media.

Tables 4.4-1 through 4.4-3 present the potential federal and state ARARs reviewed and those ARARs that have been identified as potentially applicable for NAVSTA:

- Table 4.4-1 Standards, Requirements, Criteria, or Limitations Evaluated for ARARS
- Table 4.4-2 Source Listing for Chemical-Specific ARARs for Soils
- Table 4.4-3 Source Listing for Chemical-Specific ARARs for Groundwater.

A brief statement of the rationale for the selection of each entry is also provided. Groundwater ARARs are considered to be pertinent since some of the chemicals of potential concern in soils may impact groundwater. Action-specific and location-specific ARARs are determined when any required remediation options are being considered. Action-specific or location-specific ARARs have not yet been identified. A discussion of the chemical-specific ARARs is given below.

4.4.1 Chemical-Specific ARARs for Soils

The chemical specific ARARs for soils include the Applied Action Levels for soil contact (AAL_s) as given in the California Site Mitigation Decision Tree manual (CDHS, 1986) and cleanup standards for PCB spills under TSCA (U.S. EPA, 1987b). Maximum allowable levels (MAL) for petroleum-related chemicals as defined in the Leaking Underground Fuel Tank Field Manual (State of California, 1989) apply to leaking underground fuel storage tanks. None of the sites addressed in this hazard evaluation involve leaking USTs. Therefore, these ARARs are not applicable to these sites.

The chemicals of potential concern at NAVSTA San Diego include PAHs. California has determined AAL_s of 100 mg/kg for the PAHs anthracene and phenanthracene (22 CCR 11).

Table 4.4-1

Standards, Requirements, Criteria, or Limitations Evaluated for ARARs Determination

- Archeological and Historical Preservation Act
- California Safe Drinking Water and Toxic Enforcement Act of 1986
- California State Water Quality Control Board Resolution
- Clean Air Act
- Clean Water Act
- Coastal Zone Management Act
- Endangered Species Act
- Executive Order 11990: Protection of Wetlands
- Federal Insecticide, Fungicide, and Rodenticide Act
- Fish and Wildlife Coordination Act
- Historic Sites, Buildings, and Antiquities Act
- National Environmental Policy Act
- National Historic Preservation Act
- Occupational Safety and Health Act
- Porter - Cologne Water Quality Control Act
- Rivers and Harbors Act of 1899
- Safe Drinking Water Act
- Scenic River Act
- Toxic Substances Control Act
- Water Quality Control Plan, San Francisco Bay Basin Region
- Wild and Scenic Rivers Act
- Wilderness Act
- Toxic Substances Control Act
- Resource Recovery and Conservation Act

Table 4.4-2

Source Listing for Chemical-Specific ARARs for Soil
NAVSTA San Diego

Preliminary ARAR Type	Rationale
Resources Conservation and Recovery Act (Applied Action Level)	Establishes the Applied Action Level which is the maximum concentration of a chemical in a medium to which a sensitive receptor may be chronically exposed.
CCR, Title 22: California Environmental Quality Act	Establishes the Applied Action Level which is the maximum concentration in a medium to which a sensitive receptor may be chronically exposed. Establishes the Soluble Threshold Limit Concentration and the Total Threshold Limit Concentration for the classification of materials as hazardous.

Table 4.4-3

Source Listing for Chemical-Specific ARARs for Groundwater NAVSTA San Diego

Preliminary ARAR Type	Rationale
Clean Water Act (§304) Ambient Water Quality Criteria for Protection of Aquatic Life: Marine Acute/Chronic	Site-related chemicals may impact estuarine populations located in nearby waterways
Clean Water Act (§304) Ambient Water Quality Criteria for the Consumption of Fish	Site-related chemicals may impact estuarine populations located in nearby waterways
California Enclosed Bays and Estuaries Water Quality Control Plan Ambient Water Quality Criteria for Protection of Saltwater Aquatic Life	Site-related chemicals may impact estuarine populations located in nearby waterways
California Enclosed Bay and Estuaries Water Quality Control Plan Ambient Water Quality Criteria for Protection of Human Health	Site-related chemicals may impact estuarine populations located in nearby waterways
CCR, Title 22: California Environmental Quality Act	Establishes the Applied Action Level, which is the maximum concentration in water to which marine organisms may be chronically exposed.

For the purposes of this risk assessment, it will be assumed the AALs for each of the PAHs is 100 mg/kg.

Chemical mixtures such as gasoline and diesel fuel do not have published ARARs, nor do these chemicals have toxicological values, such as RfDs, by which an AL may be calculated. The more toxic fractions of petroleum hydrocarbons (i.e. the aromatic hydrocarbons), are analyzed for separately (Sandmeyer, 1981). Acute oral toxicity studies with rats report an LD_{50} of 13.6 and 7.5 µg/kg for unleaded gasoline and diesel fuel, respectively (Beck, et al. 1984). The rat LD_{50} for xylenes, a component of fuels, is 3.5 µg/kg (ATSDR, 1989). Based on these studies, xylenes are more toxic than either gasoline or diesel fuel. as a conservative approach the AAL for xylenes (30,000 mg/kg) will be used for evaluating gasoline or diesel fuel in soils.

Risk assessment guidance from U.S. EPA (1989a) suggests developing ALs associated with a reasonable and acceptable level of risk. A method for calculating such risk-based levels in soil and water has been proposed by U.S. EPA (1990). RCRA-recommended AL_s have been proposed for a number of chemicals using this method (U.S. EPA, 1990). The RCRA AL_s is considered as a TBC and will be used for chemicals that do not have a California AALs. The RCRA AL_s is calculated using the exposure models from U.S. EPA (1990), along with U.S. EPA-approved carcinogen classifications, cancer potency factors, and chronic oral RfDs (IRIS and HEAST, U.S. EPA, 1991a, b). A conservative residential scenario is used. For Class A and B carcinogens, the intake for an adult is calculated corresponding to an incremental lifetime risk level of 1×10^{-6}; for Class C carcinogens, a risk level of 1×10^{-5} is used (U.S. EPA, 1990). Intake rates of 100 mg soil are used. The resident consumes this level 365 days per year for an entire 70-year lifetime. It is further assumed that 100 percent of the material is absorbed systemically. For noncarcinogens or substances of unknown carcinogenicity, the U.S. EPA-approved RfD was used to calculate a level in soil corresponding to a hazard quotient of unity, which is a level thought to be without adverse effect on long-term exposure (U.S. EPA, 1989a). The child in this scenario consumes 200 mg/day of soil, 365 days per year, with 100 percent absorption of the chemical.

Estimation of RCRA Action Levels. The RCRA AL_s for chemical carcinogens are calculated using the following formula (U.S. EPA, 1990):

$$AL_s = \frac{CR \times BW \times LT}{CPF_i \times IR \times AF_i \times ED \times CF} \quad (1)$$

where:

AL_s = Action Limit for soil contact, (mg/kg)
CR = Acceptable incremental lifetime cancer risk, (unitless)
BW = Body weight, (70 kg)
LT = Average lifetime, (70 years)
CPF_i = Cancer potency factor for chemical *i*, $(mg/kg\text{-}day)^{-1}$
IR = Daily ingestion rate of soil, (0.1 g/day)
AF_i = Absorption rate for chemical *i*, (unitless)
ED = Exposure duration, (70 years)
CF = Conversion factor, (0.001 kg/g).

The incremental lifetime cancer risk (also referred to as excess cancer risk) is defined as the estimated risk of developing cancer that occurs over an assumed average life span of 70 years as the result of exposure to a specific known carcinogen (U.S. EPA, 1989a).

The RCRA AL_s for noncarcinogens is based on an exposure scenario for children, age <1 to 6 years. The following equation is used to estimate the AL_s (U.S. EPA, 1990).

$$AL_s = \frac{RfD_i \times BW}{IR \times AF_i \times CF} \quad (2)$$

where:

AL_s = Action Level for contact with soil, (mg/kg)
RfD_i = reference dose for chemical i (mg/kg-day)
BW = body weight, (16 kg)
IR = ingestion rate, (0.2 g/day)
AF_i = absorption factor for chemical i, (unitless)
CF = conversion factor, (0.001 kg/g).

The RfD is an estimate of a daily exposure level (with uncertainty spanning perhaps an order of magnitude or greater) for the human population, including sensitive subpopulations, that is likely to be without an appreciable risk of deleterious effects during a lifetime (U.S. EPA, 1989a).

An RfD value for lead was not found in the published values (U.S. EPA, 1991a, b). For the purposes of this risk assessment, an RfD value was estimated using the published scientific

literature. Marcus (1986) reviewed the toxic effects of lead in humans. He presents U.S. EPA's conclusion that no threshold can be demonstrated for the toxic effects of lead. However, the author goes on to present "adjusted acceptable daily intakes" of lead for both adults and children, based on defining 5.7 µg/dL as the blood lead level below which children do not demonstrate neurologic deficit.

The acceptable blood lead level is converted into an estimated oral RfD using "slope factors," which describes the relationship between intake of lead and rising blood lead. These slope factors are different for adults and children and for inhalation versus the oral route. Although estimates of acceptable daily dose are developed with human data and are designed to protect the most sensitive populations, an uncertainty factor of five is still required in the calculations to account for the variation in the mathematical relationships between lead intake and blood lead levels.

Ryu and coworkers (1983) found that blood lead in children rises by 0.16 µg/dL for each µg/day of lead intake by the oral route. Because the AL_s for noncarcinogenic compounds is based on a child exposure scenario, the RfD will be based on this data. Taking 5.7 µg/dL to be the acceptable blood lead level, applying the slope factors, and using the uncertainty factor of 5, an estimated RfD may be calculated using the following formula:

$$Oral\ RfD = \frac{5.7\mu g/dL \ x\ 10^{-3} mg/\mu g}{0.16 \frac{\mu g/dL}{\mu g/day}\ x\ 16kg\ x\ 5} \qquad (3)$$

The RfD for lead based on this analysis is 4.45×10^{-4} mg/kg-day.

For the purposes of this risk assessment, it was assumed that the absorption rates for laboratory animals and humans are equal. Therefore, the absorption factor is 1 (U.S. EPA, 1990).

The estimated RCRA AL_s are given in Table 4.4-4. When a chemical had both RfD-based and CPF-based values, the lowest value was used.

4.4.2 Chemical-Specific ARARs for Groundwater

The California State Water Quality Control Board (CSWQCB) has defined a groundwater aquifer as a potential potable water source if the aquifer can sustain continuous pumping of

Table 4.4-4

Estimation of RCRA Action Levels for Selected Chemicals of Concern

(Page 1 of 3)

Compound Name	Units	Reference Dose (mg/kg-day)[a]	Cancer Potency Factor 1/(mg/kg-day)[a]	RfD-Based Action Level[b]	CSF-Based Action Level[c]	RCRA Action Level[d]
1,1,1-Trichloroethane	µg/kg	9.00×10^{-2}	ND[e]	7,200	NA[f]	7,200
1,2,4-Trichlorobenzene	µg/kg	1.31×10^{-3}	ND	105	NA	104.8
1,4-Dichlorobenzene	µg/kg	7.00×10^{-1}[g]	2.40×10^{-2} C	56,000	292	291.67
2-Butanone	µg/kg	5.00×10^{-2}	ND	4,000	NA	4,000
3,3'-Dichlorobenzidine	µg/kg	ND	4.50×10^{-1} B2	NA	1.56	1.56
4,4'-DDE	µg/kg	ND	3.40×10^{-1} B2	NA	2.06	2.06
4-Chloroaniline	µg/kg	4.00×10^{-3}	ND	320	NA	320
Acetone	µg/kg	1.00×10^{-1}	ND	8,000	NA	8,000
Benzoic acid	µg/kg	4.00×10^{0}	ND	320,000	NA	320,000
Bis(2-ethylhexyl)phthalate	µg/kg	2.00×10^{-2}	1.40×10^{-2} B2	1,600	50	50
Carbon Disulfide	µg/kg	1.00×10^{-1}	ND	8,000	NA	8,000
Di-n-butylphthalate	µg/kg	1.00×10^{-1}	ND	8,000	NA	8,000
Di-n-octylphthalate	µg/kg	2.00×10^{-2}	ND	1,600	NA	1,600
Diethylphthalate	µg/kg	8.00×10^{-1}	ND	64,000	NA	64,000
Ethyl benzene	µg/kg	1.00×10^{-1}	ND	8,000	NA	8,000
Gamma-chlordane	µg/kg	6.00×10^{-5}[h]	1.30×10^{0} B2[h]	4.8	0.54	0.54
2,3,7,8-TCDD	ng/kg	NA	1.5×10^{-5}	NA	4.67	4.67
Toluene	µg/kg	2.00×10^{-1}	ND	16,000	NA	16,000

Table 4.4-4

(Page 2 of 3)

Compound Name	Units	Reference Dose (mg/kg-day)[a]	Cancer Potency Factor 1/(mg/kg-day)[a]	RfD-Based Action Level[b]	CSF-Based Action Level[c]	RCRA Action Level[d]
Trichloroethene	µg/kg	ND	1.10×10^{-2} B2		63.6	63.6
Antimony	mg/kg	4.00×10^{-4}	ND	32	NA	32
Arsenic	mg/kg	1.00×10^{-3}	1.75×10^{0}[g]	80	0.4	0.4
Barium	mg/kg	5.00×10^{-2}	ND	4,000	NA	4,000
Beryllium	mg/kg	5.00×10^{-3}	4.30×10^{0} B2	400	0.16	0.16
Cadmium	mg/kg	1.00×10^{-3}	ND	80	NA	80
Chromium	mg/kg	5.00×10^{-3}	ND	400	NA	400
Cobalt	mg/kg	4.30×10^{-3}[j]	ND		NA	344
Copper	mg/kg	3.71×10^{-2}[k]	ND	2,968	NA	2,968
Total cyanide	µg/kg	2.00×10^{-2}	ND	1,600	NA	1,600
Lead	mg/kg	7.00×10^{-4}[l]	ND	56	NA	56
Mercury	mg/kg	3.00×10^{-4}	ND	24	NA	24
Molybdenum	mg/kg	4.00×10^{-3}	ND	320	NA	320
Nickel	mg/kg	2.00×10^{-2}	ND	1,600	NA	1,600
Silver	mg/kg	3.00×10^{-3}	ND	240	NA	240
Thallium	mg/kg	7.00×10^{-5}[m]	ND	5.6	NA	5.6
Vanadium	mg/kg	7.00×10^{-3}	ND	560	NA	560
Zinc	mg/kg	2.00×10^{-1}	ND	16,000	NA	16,000

Table 4.4-4

[a]U.S. EPA, 1991a; 1991b.
[b]RfD-based clean-up level from: Clean-up Level (mg/kg - [RfD (mg/kg/d) * Body Weight (kg)]/[Ingestion Rate (kg/d)] for a Body Weight of 16 kg and a Soil Ingestion Rate of 0.2 kg/d. RCRA Subpart S.
[c]CSF-based clean-up level from: Clean-up Level (mg/kg) [Target Risk (1/(mg/kg/d)] - Averaging Time (d) * [Body Weight (kg)]/[Cancer Slope Factor [1/mg/kg/d)] Ingestion Rate (kg/d) * Exposure Duiration (yr)].
The Target Risk is 1×10^{-6} for Class A and B carcinogens and 1×10^{-5} for Class C carcinogens. An Averaging Time of 70 years, a Body Weight of 70 kg, an Ingestion Rate of 0.1 grams/day, and an Exposure Duration of 70 years were used. RCRA Subpart S.30.000(c)NDND.
[d]Lowest value from the RfD-based and CSF-based values are used.
[e]ND - no data.
[f]NA - not applicable.
[g]No oral value available. Inhalation values given.
[h]Value given is for chlordane.
[i]Based on a unit risk of 5×10^{-5} µg/dL for children (HEAST).
[j]Based on an estimated dietary intake of 0.3 mg/d (Schroder et al., 1967).
[k]Value based on a drinking water standard of 1.3 mg/L and an exposure of 2 L/d for a 70 kg adult.
[l]Based on an acceptable blood lead level of 5.7 g/dL for children (Marcus, 1986).
[m]Value is given for thallium in soluble salts.

200 gallon/day; if the aquifer has a TDS of less than 3,000 mg/L; and if it is free of contaminants (CSWQCB, 1990). The groundwater aquifer underlying NAVSTA San Diego does not meet these specifications. Therefore, drinking water standards such as MCLs are not applicable to this site. The AAL for chemicals in water (AAL_{water}) for humans is based on an exposure via drinking water (CDHS, 1986). This potential ARAR would not be applicable for this site because drinking groundwater is not a potential exposure pathway at this site.

The groundwater underlying the NAVSTA discharges to Palata Creek and San Diego Bay. There are no ARARs that are directly applicable to groundwater at the site. However, because the groundwater discharges into other bodies of water, where human and environmental receptors may come in contact with the site-related chemicals, the ambient water quality criteria and AAL_{water} for marine organisms would be applicable for the waters surrounding NAVSTA.

Ambient water quality criteria for protection and maintenance of marine populations are listed under the CWA and the California Water Code Section 13170. The ambient water quality criteria for the protection of marine organisms represent the maximum concentration of a chemical, which will not have an adverse on aquatic populations (U.S. EPA, 1986). Although these values would not apply directly to chemicals in groundwater, they will be used as screening values to evaluate potential impacts on aquatic populations.

For the purposes of this hazard assessment, ARARs for protection of aquatic species will be selected based on which regulations have a greater precedence at a CERCLA site. Therefore the ALs for protection of aquatic life will be used as the primary ARARs. In the absence of these values, the California Water Quality Objectives and then the U.S. EPA Ambient Water Quality Criteria, respectively, will be used.

ARARs for the protection of wildlife could not be found in the available literature. The potential risk to wildlife from consumption of marine organisms in the area should be addressed using a quantitative risk assessment.

4.5 Hazard Evaluation

This section characterizes the potential risks, if any, associated with the exposure to chemicals in soils and groundwater for each of the identified sites at NAVSTA. For the purposes of this hazard assessment, the maximum detected concentration of the chemicals of potential concern was used compared to chemical-specific ARARs and action levels. The chemical-specific

ARARs for soils are designed to protect an individual exposed under a residential scenario. Estimated intake values for residential scenario would be higher than an estimated intake resulting from an occupational exposure because of the longer exposure periods used for a residential exposure. This conservative approach compensates for risk assessment uncertainties and provides a safety margin.

Maximum concentrations in groundwater will be compared with ARARs for the protection of aquatic organisms. The groundwater underlying the sites will be diluted upon discharge into surface waters where aquatic populations may exist. Groundwater concentrations are compared directly with ARARs. This conservative approach is designed to provide a margin of safety when evaluating risk to aquatic organisms.

The comparisons of maximum analytical results with the appropriate ARARs are given in the sections below. Exceeding an ARAR does not in itself imply a potential hazard. It does suggest that a site be evaluated using a quantitative risk assessment that incorporates site-specific exposure scenarios.

4.5.1 Site 2 - Mole Pier

Chemicals of potential concern at this site included organics, heavy metals, and fuels. Bis(2-ethylhexyl)phthalate, dioxins and furans, arsenic, beryllium, and lead concentrations in soils were above the respective ARARs RCRA action levels (Table 4.5-1). The maximum concentration for arsenic and beryllium were more than an order of magnitude above their respective ALs (Table 4.5-1). However, the ALs for these compounds were based on carcinogenic risk using a residential exposure scenario. This risk assumes that a receptor is exposed everyday for 70 years. The RfD-based ALs for these compounds (80 mg/kg for arsenic and 400 mg/kg for beryllium) are more than an order of magnitude greater than their maximum soil concentrations. These results suggest that these site-related chemicals do not present an immediate threat to human health.

Lead was also present at concentrations above ARARs (462 mg/kg as compared to a AL_s of 56 mg/kg). The maximum concentration of lead was not found in the playing field. The sample from this area contained 1.9 mg/kg of lead. However, the AL_s is designed to protect a resident at the site; therefore, the potential intake of soil resulting from an adult in the playing field is expected to be less than intake resulting from residential exposure. Given that the concentrations of lead in the playing field are below the AL_s and that this value is based on an higher intake than would be expected for this site, it is unlikely that this is a significant

Table 4.5-1

Comparison of Maximum Soil Values with ARARs for Site 2 - Mole Pier

(Page 1 of 3)

Compound Name	Units	Maximum Value	TSCA Clean-up Levels[a]	California Applied Action Level for Soil	RCRA Action Level[b]
1,1,1-Trichloroethane	µg/kg	8	ND	ND	7,200
2-Butanone	µg/kg	400	ND	ND	4,000
2-Methylnaphthalene	µg/kg	67,000	ND	100,000[c]	--
Acetone	µg/kg	1,200	ND	ND	8,000
Anthracene	µg/kg	2,400	ND	100,000	--
Benzo(a)anthracene	µg/kg	5,600	ND	100,000[c]	--
Benzo(a)pyrene	µg/kg	3,100	ND	100,000[c]	--
Benzo(c)fluoranthene	µg/kg	3,100	ND	100,000[c]	--
Benzo(g,h,i)perylene	µg/kg	1,500	ND	100,000[c]	--
Benzo(k)fluoranthene	µg/kg	4,300	ND	100,000[c]	--
Bis(2-ethylhexyl)phthalate	µg/kg	750	ND	ND	50
Chrysene	µg/kg	5,600	ND	100,000[c]	--
Ethyl benzene	µg/kg	710	ND	ND	8,000
Fluoranthene	µg/kg	15,000	ND	100,000[c]	--
Fluorene	µg/kg	7,400	ND	100,000[c]	--
Indeno(1,2,3-c,d)pyrene	µg/kg	1,300	ND	100,000[c]	--
Methylene chloride	µg/kg	32	ND	ND	--

Table 4.5-1

Compound Name	Units	Maximum Value	TSCA Clean-up Levels[a]	California Applied Action Level for Soil	RCRA Action Level[b]
Naphthalene	µg/kg	25,000	ND	100,000[c]	--
PCB-1260	µg/kg	560	25,000	ND	0.09
Phenanthrene	µg/kg	13,000	ND	100,000	--
Phenol	µg/kg	180	ND	ND	48,000
Pyrene	µg/kg	11,000	ND	100,000[c]	--
2,3,7,8-TCDD equiv.	ng/kg	698	ND	ND	4.67
Toluene	µg/kg	4,400	ND	ND	16,000
Xylenes (total)	µg/kg	970	ND	30,000,000	--
Antimony	mg/kg	15.3	ND	ND	32
Arsenic	mg/kg	5.8	ND	ND	0.4
Barium	mg/kg	178	ND	ND	4,000
Beryllium	mg/kg	4.2	ND	ND	0.16
Chromium	mg/kg	54.7	ND	ND	400
Cobalt	mg/kg	16.8	ND	ND	344
Copper	mg/kg	2,440	ND	ND	2,968
Lead	mg/kg	462	ND	ND	56
Mercury	mg/kg	4.5	ND	ND	24
Molybdenum	mg/kg	1.9	ND	ND	320
Nickel	mg/kg	20.6	ND	ND	1,600

Table 4.5-1

(Page 3 of 3)

Compound Name	Units	Maximum Value	TSCA Clean-up Levels[a]	California Applied Action Level for Soil	RCRA Action Level[b]
Selenium	mg/kg	0.3	ND	ND	ND
Silver	mg/kg	1.5	ND	ND	240
Vanadium	mg/kg	95.5	ND	ND	560
Zinc	mg/kg	936	ND	ND	16,000
Diesel	mg/kg	16,000	ND	30,000	--
Hydraulic oil	mg/kg	134	ND	30,000	--
Motor oil	mg/kg	360	ND	30,000	--
Stoddard	mg/kg	185	ND	30,000	--

[a]Toxic Substances Control Act, U.S. EPA, 1987.
[b]Table 4.13
[c]Applied action level for anthracene and phenanthrene used for all polyaromatic hydrocarbons.

risk in visiting the area. Although there appears to be no immediate threat to human health, the potential health risks to receptors should be evaluated using a quantitative risk assessment.

PAHs were below the respective AAL for soils; however, there were 14 different PAH compounds present in soils at the site. These compounds have similar toxicological endpoints (ATSDR, 1989). Therefore, the additive resulting from the intake of these compounds may have a potential impact on human health. The additive effect of exposure to these multiple compounds should be addressed using a quantitative risk assessment.

ARAR values could not be found for selenium or Stoddard solvent in the available literature reviewed. The published scientific literature should be reviewed to determine acceptable intake levels for these chemicals.

Chemicals in surface soils may be transported via erosion into Palata Creek. Benthic populations may be exposed to site-related chemicals in surface soils. The concentration of chemicals in surface soils should be evaluated further to determine if transport of chemicals via surface water is a significant migration pathway.

The chemicals present in soils at this site are not likely to have an immediate impact on human health or the environment. The ARARs used represent acceptable concentrations for a sensitive receptor living in the area. Some the site-related chemicals were above their respective ARARs, and a number of the chemicals that were below their respective ARARs have similar toxicological endpoints. The additive toxicological effects may have a significant impact on human health. The potential impacts of these chemicals on human health should be evaluated using a quantitative risk assessment and site-specific exposure scenarios.

Chemicals in the groundwater at this site discharge into Palata Creek. Published ARARs could not be found for benzoic acid, antimony, barium, molybdenum, vanadium, diesel, hydraulic oil, or motor oil. The published scientific literature should be used to establish acceptable water concentrations for the protection of marine life.

The maximum concentrations of phenol and arsenic in groundwater (1 µg/L and 5.7 mg/L, respectively) were below their respective ARARs of 5,800 and 20 mg/L, respectively (Table 4.2-2). The PCB concentrations (1 µg/L for both Aroclor-1254 and Aroclor-1260) are more than an order of magnitude above the California Water Quality Objectives for the protection

of marine life (0.03 µg/L) (Table 4.2-2). The maximum toxaphene concentration of 1 µg/L was more than three orders of magnitude above the state ARAR of 0.0002 µg/L (Table 4.2-2). These chemicals may have a potential impact on marine life in the area. Groundwater modeling will be required to estimate the concentrations of these chemicals in the nearby surface waters.

4.5.2 Site 3 - Salvage Yard

Environmental sampling at this site was limited to groundwater. Published ARARs for carbon disulfide, 1,1-dichloroethane, antimony, barium, cobalt, molybdenum, vanadium, and diesel were not found in the available literature. Acceptable exposure concentrations for marine life should be determined based on the published toxicological studies.

Arsenic and 1,2-dichloroethene concentrations in groundwater were below their respective ARARs (Table 4.2-3). The maximum concentrations of cadmium (13.4 mg/L), chromium (5.1 mg/L), and nickel (13.7 mg/L) exceeded their respective ARARs (5, 2, and 8 mg/L, respectively) (Table 4.2-3). However, the maximum concentration of chromium was below both the California and U.S. EPA water quality criteria of 80 mg/kg (Table 4.2-3). Therefore, the toxicity of this chemical should be evaluated further to determine acceptable exposure concentrations for saltwater organisms. Groundwater modeling will be required to determine if concentrations in the groundwater will be diluted to concentrations that are within acceptable limits for the protection of aquatic populations.

4.5.3 Site 4 - DPDO Storage Yard

Chemicals of potential concern at this site include organics, heavy metals, fuels, and Stoddard solution. The maximum concentrations of alpha-chlordane, bis(2-ethylhexyl)phthalate, diethylphthalate, gamma-chlordane, antimony, arsenic, beryllium, and lead are above their respective ARARs (Table 4.5-2). The AL_s for alpha-chlordane, bis(2-ethylhexyl)phthalate, gamma-chlordane, arsenic, and beryllium are based on the potential carcinogenic risk to an individual living on the site for 70 years. Given that the potential exposure to these chemicals would be limited to only occasional exposures during a time period in which an individual would work at NAVSTA, these values are extremely conservative.

The maximum concentration for antimony was slightly higher than the AL_s, 33.7 mg/kg as compared to the AL_s of 32 mg/kg (Table 4.5-2). Given that the ARAR was based on a residential exposure, it is unlikely that this chemical would have a significant impact on human health.

Table 4.5-2

Comparison of Maximum Soil Values with ARARs for Site 4 - DPDO Salvarge Yard

Compound Name	Units	Maximum Value	California Applied Action Level for Soil	RCRA Action Level[a]
Acenaphthylene	µg/kg	80	100,000[b]	--
Acetone	µg/kg	39	ND	8,000
Alpha-chlordane	µg/kg	180	ND	0.54
Anthracene	µg/kg	51	100,000	--
Benzo(a)anthracene	µg/kg	220	100,000[b]	--
Benzo(a)pyrene	µg/kg	740	100,000[b]	--
Benzo(b)fluoranthene	µg/kg	680	100,000[b]	--
Benzo(g,h,i)perylene	µg/kg	380	100,000[b]	--
Benzo(k)fluoranthene	µg/kg	490	100,000[b]	--
Benzoic acid	µg/kg	160	ND	320,000
Bis(2-ethylhexyl)phthalate	µg/kg	2,600	ND	50
Carbon disulfide	µg/kg	370	ND	8,000
Chrysene	µg/kg	460	100,000[b]	--
Dibenz(a,h)anthracene	µg/kg	91	100,000[b]	--
Diethylphthalate	µg/kg	91,000	ND	64,000
Fluoranthene	µg/kg	480	100,000[b]	--
Gamma-chlordane	µg/kg	170	ND	0.54
Indeno(1,2,3-c,d)pyrene	µg/kg	280	100,000[b]	--

Table 4.5-2

(Page 2 of 3)

Compound Name	Units	Maximum Value	California Applied Action Level for Soil	RCRA Action Level[a]
Phenanthrene	µg/kg	200	100,000	--
Pyrene	µg/kg	1,200	100,000[b]	--
Antimony	mg/kg	33.7	ND	32
Arsenic	mg/kg	16.6	ND	0.4
Barium	mg/kg	291	ND	4,000
Beryllium	mg/kg	6.3	ND	0.16
Cadmium	mg/kg	3.9	ND	80
Chromium	mg/kg	67.3	ND	400
Cobalt	mg/kg	16.2	ND	344
Copper	mg/kg	466	ND	2,968
Lead	mg/kg	3,280	ND	56
Mercury	mg/kg	0.79	ND	24
Molybdenum	mg/kg	5.9	ND	320
Nickel	mg/kg	30.7	ND	1,600
Selenium	mg/kg	0.65	ND	ND
Thallium	mg/kg	0.55	ND	5.6
Vanadium	mg/kg	92.8	ND	560
Zinc	mg/kg	727	ND	16,000
Diesel	mg/kg	40	30,000[c]	--

Table 4.5-2

Compound Name	Units	Maximum Value	California Applied Action Level for Soil	RCRA Action Level[a]

[a]Table 4-13.
[b]Applied action levels for anthracene and phenanthrene used for all polyaromatic hydrocarbons.
[c]Applied action levels for xylenes used.

The maximum concentration of PAHs in soils is at least an order of magnitude below the AAL_s of 100,000 µg/kg (Table 4.5-1). However, more than 13 PAH compounds were identified in soil samples (acenaphthylene, anthracene, benzo(a)pyrene, benzo(g,h,i)perylene, benzo(k)fluoranthene, dibenzo(a,h)anthracene, fluoranthene, indeno(1,2,3-c,d)pyrene, and pyrene). These compounds have similar toxicological endpoints (ATSDR, 1989). Therefore, the potential additive toxicity resulting from the intake of these compounds may have a potential impact on human health. The additive effect of exposure to these multiple compounds should be addressed using a quantitative risk assessment.

Presently, site-related chemicals in soils are isolated from human receptors because the site is paved. Therefore, it is concluded that no immediate threat to human health or the environment exists at the present time. However, a quantitative risk assessment using site-specific exposure models is required to evaluate the potential risk to human health in the future.

Published groundwater ARARs for carbon disulfide, antimony, beryllium, and Stoddard solution were not found in the available literature. Acceptable water concentrations for these chemicals should be estimated based on the published toxicological literature.

Maximum concentrations for cadmium and silver were above their respective ARARs. The maximum cadmium concentration (8.7 mg/L) was above the AAL for aquatic life of 5 mg/L, but below the ambient water criteria of 9.3 mg/L (Table 4.2-7). The published scientific literature should be reviewed to determine if cadmium presents a potential hazard to marine life. The concentration of silver in groundwater (6.7 mg/L) was only slightly elevated above its respective AAL of 6 mg/L (Table 4.2-7). Given that groundwater will be diluted into San Diego Bay, it is unlikely that this concentration of silver presents a significant risk to aquatic organisms.

A review of the published scientific literature will be required to estimate acceptable exposure concentrations for carbon disulfide, antimony, beryllium, cadmium, and Stoddard solution. Groundwater modelling will also be required to determine the final concentrations of chemicals of potential concern in San Diego Bay.

4.5.4 Site 7 - Sewer Plant Site

Chemicals of potential concern at this site include organics and heavy metals. Chemicals of potential concern in soils that exceeded ARARs include: 1,2,4-trichlorobenzene, 1,4-

dichlorobenzene, 3,3-dichlorobenzidine, 4,4-DDE, 4-chloroaniline, bis(2-ethylhexyl)phthalate, and lead (Table 4.5-3). The ALs for 1,2-dichlorobenzene, 3,3-dichlorobenzidine, 4,4-DDE, and bis(2-ethylhexyl)phthalate were estimated based on incremental cancer risk for an individual being exposed on a daily basis for 70 years. Therefore, the values presented in the table are extremely conservative, and actual acceptable concentrations are probably far greater than the AL. Therefore these chemicals, including 1,2,4-trichlorobenzene, 4-chloroaniline, and lead, should be evaluated using a quantitative risk assessment and site-specific exposure scenarios.

Comparison of the chemicals of potential concern in groundwater and their respective ARARs are given in Table 4.2-7. Published ARARs for acetone, antimony, barium, beryllium, and molybdenum could not be found in the available literature. Therefore, acceptable exposure concentrations should be estimated based on the published toxicological studies. Chromium, nickel, silver, and zinc were above their respective ARARs (Table 4.2-7). The maximum concentration for chromium was above the California AAL of 2 mg/L but below the California and U.S. EPA water quality criteria of 50 mg/L (Table 4.2-7). Zinc was also above the California AAL of 10 mg/L but below the California and U.S. EPA water quality criteria of 86 mg/L (Table 4.2-7). A review of the scientific literature is required to better determine the acceptable exposure concentrations for chromium and zinc.

A review of the published scientific literature will be required to estimate acceptable exposure concentrations for acetone, antimony, barium, beryllium, chromium, molybdenum, and zinc. Groundwater modeling will also be required to determine the final concentrations of chemicals of potential concern in San Diego Bay.

4.5.5 Site 8 - Fire Fighter Training Facility

Chemicals of potential concern at this site includes organics, heavy metals, and fuels. Arsenic and beryllium concentrations in soils exceeded their respective ALs (Table 4.5-4). The ALs for arsenic and beryllium are based on the incremental cancer risk of an individual living at the site for 70 years. Given that exposure to these soils are likely to be limited to individuals working within an excavation, the use of cancer risk-based values is very conservative. The use of an RfD-based value would be more appropriate for this site. The RfD-based values for arsenic and beryllium are 80 and 400 mg/kg, respectively. The maximum concentrations for arsenic (4.6 mg/kg) and beryllium (1.4 mg/kg) are lower than the respective RfD-based ALs. The maximum 2,3,7,8-TCDD equivalent concentration for the hexachlorodioxin measured in one soil sample was well below the RCRA ALs for dioxins.

Table 4.5-3

Comparison of Maximum Soil Values with ARARs for Site 7 - Sewer Plant Site

(Page 1 of 3)

Compound Name	Units	Maximum Value	TSCA Clean-up Levels[a]	California Applied Action Levels for Soil	RCRA Action Levels[b]
1,2,4-Trichlorobenzene	µg/kg	160	ND[c]	ND	104.8
1,4-Dichlorobenzene	µg/kg	510	ND	ND	--
2-Butanone	µg/kg	83	ND	ND	4,000
2-Methylnaphthalene	µg/kg	1,900	ND	100,000[d]	--
3,3'-Dichlorobenzidine	µg/kg	81	ND	ND	1.6
4,4'-DDE	µg/kg	290	ND	ND	2.1
4-Chloroaniline	µg/kg	2,600	ND	ND	320
Acenaphthene	µg/kg	130	ND	100,000[d]	--
Acetone	µg/kg	340	ND	ND	8,000
Anthracene	µg/kg	260	ND	100,000	--
Benzo(a)anthracene	µg/kg	490	ND	100,000[d]	--
Benzo(a)pyrene	µg/kg	310	ND	100,000[d]	--
Benzo(c)fluoranthene	µg/kg	390	ND	100,000[d]	--
Benzo(g,h,i)perylene	µg/kg	110	ND	100,000[d]	--
Benzo(k)fluoranthene	µg/kg	340	ND	100,000[d]	--
Bis(2-ethylhexyl)phthalate	µg/kg	16,000	ND	ND	50
Carbon disulfide	µg/kg	31	ND	ND	8,000
Chrysene	µg/kg	580	ND	100,000[d]	--

Table 4.5-3

(Page 2 of 3)

Compound Name	Units	Maximum Value	TSCA Clean-up Levels[a]	California Applied Action Levels for Soil	RCRA Action Levels[b]
Di-n-octylphthalate	µg/kg	340	ND	ND	1,600
Diethylphthalate	µg/kg	500	ND	ND	64,000
Ethyl benzene	µg/kg	48	ND	ND	8,000
Fluoranthene	µg/kg	1,300	ND	100,000[d]	--
Fluorene	µg/kg	210	ND	100,000[d]	--
Indeno(1,2,3-c,d)pyrene	µg/kg	160	ND	100,000[d]	--
Naphthalene	µg/kg	530	ND	100,000[d]	--
PCB-1254	µg/kg	2,300	25,000	ND	--
Phenanthrene	µg/kg	1,300	ND	100,000	--
Pyrene	µg/kg	1,200	ND	100,000[d]	--
Toluene	µg/kg	44	ND	ND	16,000
Total Cyanide	µg/kg	1	ND	ND	1,600
Trichloroethene	µg/kg	4	ND	ND	--
Xylenes (total)	µg/kg	290	ND	30,000,000	--
Antimony	mg/kg	9.4	ND	ND	32
Cadmium	mg/kg	5	ND	ND	80
Chromium	mg/kg	85.4	ND	ND	400
Cobalt	mg/kg	19.8	ND	ND	344
Copper	mg/kg	98.3	ND	ND	2,968

Table 4.5-3

(Page 3 of 3)

Compound Name	Units	Maximum Value	TSCA Clean-up Levels[a]	California Applied Action Levels for Soil	RCRA Action Levels[b]
Lead	mg/kg	106	ND	ND	56
Mercury	mg/kg	1.8	ND	ND	24
Molybdenum	mg/kg	2.8	ND	ND	320
Nickel	mg/kg	24.8	ND	ND	1,600
Arsenic	mg/kg	4.8	ND	ND	0.4
Barium	mg/kg	239	ND	ND	4,000
Silver	mg/kg	16.5	ND	ND	240
Vanadium	mg/kg	85	ND	ND	560
Zinc	mg/kg	253	ND	ND	16,000

[a]Toxic Substances Control Act (TSCA) U.S. EPA, 1987.
[b]Table 4-13.
[c]ND - no data.
[d]Applied action levels for anthracene and phenanthrene used for all polyaromatic hydrocarbons.

Table 4.5-4

Comparison of Maximum Soil Values with ARARs for Site 8 - Fire Fighter Training Facility

(Page 1 of 2)

Compound Name	Units	Maximum Value	California Applied Action Level for Soil	RCRA Action Level[a]
2-Methylnaphthalene	µg/kg	1,800	100,000[b]	--
Acetone	µg/kg	73	ND	8,000
Fluorene	µg/kg	62	100,000[b]	--
Naphthalene	µg/kg	550	100,000[b]	--
Phenanthrene	µg/kg	51	100,000	--
2,3,7,8-TCDD equiv.	ng/kg	0.02	ND	4.67
Arsenic	mg/kg	4.6	ND	0.4
Barium	mg/kg	117	ND	4,000
Beryllium	mg/kg	1.4	ND	0.1628
Chromium	mg/kg	15.7	ND	400
Cobalt	mg/kg	9.1	ND	--
Lead	mg/kg	13.3	ND	56
Mercury	mg/kg	0.72	ND	24
Nickel	mg/kg	5.4	ND	1,600
Silver	mg/kg	1.2	ND	240
Thallium	mg/kg	0.78	ND	5.6
Vanadium	mg/kg	52.9	ND	560
Zinc	mg/kg	37.6	ND	16,000

Table 4.5-4

(Page 2 of 2)

Compound Name	Units	Maximum Value	California Applied Action Level for Soil	RCRA Action Level[a]
Diesel	mg/kg	680	30,000[c]	--
JP-4	mg/kg	730	30,000[c]	--
JP-5	mg/kg	650	30,000[c]	--

[a]Table 4-13.
[b]AAL for anthracene and phenanthrene used for all PAHs.
[c]AAL for xylenes used.

The following PAHs were detected in soils: fluorene, naphthalene, phenanthrene, and 2-methylnaphthalene. These total concentration of the PAHs is 2,453 µg/kg, which is below the California AAL_{soil} value of 100,000 µg/kg; therefore, it is unlikely that exposure to the PAHs will have a significant impact on human health.

Comparison of the chemicals of potential concern in groundwater and their respective ARARs are given in Table 4.2-9. Published ARARs for 1,1-dichloroethane, bis(2-ethylhexyl) phthalate, carbon disulfide, chloroethane, vinyl chloride, antimony, vanadium, JP-4, JP-5, and diesel could not be found in the available literature. Therefore, acceptable exposure concentrations should be estimated based on the published toxicological studies. Chromium, copper, nickel, silver, and zinc were above their respective ARARs (Table 4.2-7). The maximum concentration for chromium was above the California AAL of 2 mg/L but below the California and U.S. EPA water quality criteria of 50 mg/L (Table 4.2-7). Zinc was also above the California AAL of 10 mg/L but below the California and U.S. EPA water quality criteria of 86 mg/L (Table 4.2-7). A review of the scientific literature is required to better determine the acceptable exposure concentrations for chromium and zinc.

A review of the published scientific literature will be required to estimate acceptable exposure concentrations for acetone, antimony, barium, beryllium, chromium, molybdenum, and zinc. Groundwater modeling will also be required to determine the final concentrations of chemicals of potential concern in San Diego Bay.

5.0 Conclusions and Recommendations

The following sections provide site-specific conclusions and recommendations. In addition, the data gaps inherent to the limited investigation are brought to light to help formulate the recommended actions. This investigation provided soil classification and hydrogeologic evaluation and documented the nature and extent of soil and groundwater contamination at Sites 2, 4, 7, and 8. Results of the site characterization investigation were used to assess the potential exposure pathways due to contaminants found at the site. The conclusions reached for each site as a result of these the findings are as follows.

5.1 Site 2 - Mole Pier

- Soils at the site are loose to moderately dense silty sands containing variable amounts of clay and clay horizons. The sands were yellowish brown to grayish brown, medium dense to loose, and contained stringers of more coarse sands and in some cases gravels. Interbedded in these sands are stringers of clay, olive gray to black, medium stiff, with inclusions of gravel and mica. Significant amounts of mica and shell fragments were associated with the sands and clay stringers found in the upper 10 feet of soil. The western end of the site contained a noticeable amount of concrete and other nonflammable rubble in the upper 10 feet of soil.

- Hydraulic conductivities at this site range from 2.6×10^{-3} to 1.0×10^{-2} feet/minute, with a mean of 3.4×10^{-3} feet/minute. The relative magnitude of the tidal influences at Site 2 range from less than 0.1 foot to more than 1 foot. From the field data, a groundwater flow velocity of about 10.1 feet/year was calculated.

- Groundwater exhibits conductivities above the state guidelines for primary drinking water sources.

- The results of chemical analyses indicate that past activities at the site have caused a wide distribution of contamination across the site. Comparing the analytical results of the TPH diesel fraction, toluene, and ethyl benzene indicates that a probable source of contamination may be a leaking UST in the southwestern portion of the site.

- BNA compounds were detected in the background boring sample from MW12, which indicates that this area may not be representative of a background condition.

- Soil samples analyzed for dioxin and dibenzofurans indicate a possible health concern, but further sampling and analysis is required.

- Potential human receptors at Mole Pier include adults using the playing fields, Navy personnel working at Mole Pier, and construction or maintenance crews working in excavations at the site. Chemicals in surface soils may be transported to Paleta Creek during rain events. Transport of these soils to the sediment of the creek may result in exposure of benthic (bottom dwelling) organisms in the creek. The compounds present in the soil may leach into groundwater. Groundwater at this site discharges into Paleta Creek. Therefore, aquatic populations in Paleta Creek and San Diego Bay may be exposed to site-related chemicals.

- Chemicals of potential concern at this site included organics, heavy metals and fuels. Bis(2-ethylhexyl)phthalate, dioxins, furans, arsenic, beryllium, and lead concentrations in soils were above the respective ARARs or applicable RCRA ALs. The maximum concentration for arsenic and beryllium were more than an order of magnitude above their respective action levels. The ALs for these compounds, however, was based on a very conservative assumption of carcinogenic risk using a residential exposure scenario. These results suggest that these site-related chemicals do not present an immediate threat to human health but have the potential for concern of long-term risks.

- The chemicals present in soils at this site are not likely to have an immediate impact on human health or the environment. The ARARs used represented acceptable concentrations for a sensitive receptor living in the area. Some the site-related chemicals were above their respective ARARs. A number of the chemicals that were below their respective ARARs have similar toxicological endpoints, and the additive toxicological effects may have a significant impact on human health. The potential impacts of these chemicals on human health should be evaluated using a quantitative risk assessment and site-specific exposure scenarios.

- Chemicals in the groundwater at this site discharge into Paleta Creek. Published ARARs could not be found for benzoic acid, antimony, barium, molybdenum, vanadium, diesel, hydraulic oil, or motor oil. The published scientific literature should be used to establish acceptable water concentrations for the protection of marine life.

- The PCBs (toxaphene) concentrations are orders of magnitude above the stated ARARs and may have a potential impact on marine life in the area. Groundwater modeling will be required to estimate the concentrations of these chemicals in the nearby surface waters.

5.2 Site 3 - Salvage Yard

Characterization of the Salvage Yard and assessment of the nature and extent of contamination was completed during the verification step investigation (IT, 1988) and, therefore, was not the focus of this report. However, a summary of the conclusions reached in the previous report and the conclusions of the hazard assessment are stated here.

- The Salvage Yard is characterized by poorly graded sands and silty sands containing varying amounts of organic silts and clays.
- Hydraulic conductivities for the site are consistent with silty and poorly grades sands.
- Soils at Site 3 exhibit some contamination:
  - Impact by organic compounds is restricted to one location
  - Impact of soil by petroleum is wide spread; however, only three samples exhibited levels above 100 ppm, and no free product is present in subsurface soils at the site.
- Surface sediments contain inorganic contaminants and TPH.
- Groundwater exhibits conductivities above the state guidelines for primary drinking water sources.
- Evaluation of the potential for exposure at Site 3 suggests that primary human exposure routes are limited to on-site occupational exposure pathways.

5.3 Site 4 - DPDO Storage Area

- Soils at the site are loose to moderately dense silty sands containing variable amounts of clay and clay horizons.
- Groundwater at the site is influenced to some degree by tidal fluctuations; however, a tidal efficiency factor was not obtained. The DPDO Storage area appears the occupy an area where the water table is depressed, and the hydraulic gradient is towards the site, away from the bay. Hydraulic conductivities at this site range from 5.5×1^{-4} to 5.3×1^{-3} feet/minute, consistent with the soil characterization. Groundwater flow rates at the DPDO Storage Area is approximately 10 feet per year.
- PAHs and carbon disulfide were found in 11 soil samples, and in groundwater. Dibutyl chlorendate was observed in all soil and

groundwater samples. The soils provide a source of carbon disulfide and dibutyl chlorendate to groundwater. The source of these compounds in soil is not evident.

- Groundwater exhibits conductivities above the state guidelines for primary drinking water sources.

- Two significant data gaps are identified:

  - Background soil concentration determinations for inorganic analytes was limited by soil heterogeneity and small number of site-specific background samples.

  - Some organic compounds were infrequently detected and thus were eliminated from the list of potential contaminants of concern. These may be present in soils but have not been found due to sampling bias.

- Primary pathways for human exposure via soil ingestion, inhalation, dermal contact, or groundwater ingestion have been determined to be inviable or to pose an insignificant exposure potential. Aquatic organisms appear to be the only primary receptors of discharge of contaminated groundwater to Paleta Creek. Exposure of aquatic organisms to the contaminants in groundwater may cause deleterious effects to them.

5.4 Site 7 - Sewer Plant Site

- Soils at the site are loose to moderately dense, silty and clayey sands containing variable amounts of clay and clay horizons, and stringers of gravel.

- Groundwater at the site is influenced to some degree by tidal fluctuations; however, a tidal efficiency factor was not obtained. The Sewer Plant lies in an area where tidal fluctuations appear to periodically reverse the hydraulic gradient.

- Hydraulic conductivities at this site range from 9.5×1^{-4} to 1.6×1^{-3} feet/minute, a very narrow range, and are consistent with the soil characterization. Groundwater flow rates at the Sewer Plant are approximately 1.1 feet per year.

- Contamination by organic compounds is common at the Sewer Plant. Xylenes, carbon disulfide, 2-butanone, and toluene are reported from three soil borings. PAHs, chlorinated hydrocarbons, PCBs, pesticides, and lead and mercury are found at elevated concentrations in soils.

Groundwater at the site exhibits impact by volatile and semivolatile compounds found in the soil. Dibutyl chlorendate is also found in groundwater; however, a source of this compounds in soil is not evident. Groundwater does not appear to exhibit impact by PCBs or the pesticides found in soil at this site.

- Groundwater exhibits conductivities above the state guidelines for primary drinking water sources.

- Two significant data gaps are identified:

  - Background soil concentration determinations for inorganic analytes was limited by soil heterogeneity and the small number of site-specific background samples may have biased the evaluation of metals in soils and groundwater.

  - The list of contaminants of concern is large, and published data for determination of ARARs for organic and inorganic contaminants are not available. The impact of these compounds on the water quality of San Diego Bay will require evaluation via a risk-based model.

- Primary pathways for human exposure via soil ingestion, inhalation, dermal contact, or groundwater ingestion have been determined to be inviable or to pose an insignificant exposure potential. Aquatic organisms appear to be the only primary receptors of discharge of contaminated groundwater to Paleta Creek. Exposure of aquatic organisms to the contaminants in groundwater may cause deleterious effects.

5.5 Site 8 - Fire Fighter Training Facility

- The site is underlain by a well-sorted silty sand, yellow to olive gray, loose to medium dense, with gravel and shell fragment inclusions. A few zones of silt interbedding as illustrated on the cross section are present from 10 to 25 feet below ground surface. The silt zones are loose to medium dense, dark olive brown with dark striations. No shell remnants were noted, but clay stringers were noted throughout the sands. The clay tended to be olive gray to dark brown, stiff to medium stiff with mica minerals throughout.

- Hydraulic conductivity ranged from 6.3×10^{-4} to 3.2×10^{-3} feet/minute, with a mean of 4.9×10^{-4} feet/minute. From the results of groundwater measurements,

a groundwater flow velocity was calculated to be approximately 3.2 feet/year towards San Diego Bay.

- The potential chemicals of concern in soils is limited to subsurface soils that are covered with either clean soils or asphalt. Site 8 is mostly paved where the fire training exercises are conducted, and the remainder of the site to the north west is covered with a soil/gravel mix. Because this site is covered, it is unlikely that an individual working in the area would be exposed unless that individual is working within an excavation. Such an individual may be exposed via direct dermal contact, inadvertent ingestion of soils, and inhalation of volatile organics vaporizing from the soils.

- Chemicals of potential concern at this site include organics, heavy metals, and fuels. The chemicals present in soils at Site 8 do not pose an apparent risk to human health under present or potential future receptor populations.

- A review of the published scientific literature will be required to estimate acceptable exposure concentrations for acetone, antimony, barium, beryllium, chromium, molybdenum, and zinc.

5.6 Recommendations

Based on the data evaluated, site-related chemicals at the previously discussed sites do not pose an apparent immediate threat to human health or the environment. However, the following studies should be conducted to better evaluate the potential risk associated with site-related chemicals at NAVSTA:

- Quantitative risk assessment utilizing site-specific exposure scenarios is needed to evaluate the potential risks to human health from chemicals in soils at Sites 2, 4, and 7.

- Further soil sampling should be performed at Site 2 with isomer-specific dioxin and dibenzofuran analysis to more accurately estimate the risks due to dioxins and furans using the TEF approach.

- Review of the scientific literature is required to estimate acceptable intake levels of selenium and Stoddard solvent for human receptors.

- Groundwater modeling is required at all of the sites to estimate final chemical concentrations in nearby surface waters.

- Acceptable water concentrations for the protection of aquatic populations should be estimated for the following chemicals: acetone, benzoic acid, 1,1-dichloro-

ethane, bis(2-ethylhexyl)phthalate, carbon disulfide, chloroethane, vinyl chloride, antimony, barium, beryllium, cadmium, chromium, cobalt, molybdenum, vanadium, zinc, JP-4, JP-5, diesel, Stoddard solution, hydraulic oil, and motor oil.

- Baseline risk assessment is needed to evaluate the potential risk to birds from exposure to site-related chemicals in nearby surface waters.

Overall, an HRS score should be performed on all five sites to determine the priority that should be placed on these sites compared with others in the Navy IR program. To accomplish the above-recommended activities, an RI should be performed at each site to obtain the appropriate data necessary to complete a baseline risk assessment.

References

Agency for Toxic Substances and Disease Registry (ATSDR), 1989, "Toxicological Profile for Total Xylenes," (Draft).

Beck, L. S., D. I. Hepler, and K. L. Hansen, 1984, "The Acute Toxicology of Selected Petroleum Hydrocarbons" in ***Applied Toxicology of Petroleum Hydrocarbons.*** M.A. Mehlman, Ed., Princeton Scientific Publishers, Princeton, New Jersey.

California Administrative Code, Title 22, Division 4, Chapter 30, Minimum Standards for Management of Hazardous and Extremely Hazardous Waste, Article II, Criteria for Identification of Hazardous and Extremely Hazardous Waste.

California Department of Health Services (CDHS), 1986, ***California Site Migration Decision Tree Manual.***

California Water Resources Control Board (CSWRCB), 1991, "Water Quality Control Plan for Enclosed Bays and Estuaries of California," 91-13WQ, April 1991.

Dames and Moore, October 28, 1987, ***Report Geotechnical Investigation P-224 Brig 32nd Street Naval Station, San Diego, California***, Tustin, California.

Davis, D. and S. Safe, 1988, "Immunosuppressive Activities of Polychlorinated Dibenzofuran Cogeners: Quantitative Structure-Activity Relationships and Interactive Effects," ***Toxicol. and Applied Pharm.***, 94:141-149.

Department of Navy Public Works Center, September 1989, ***Final Preliminary Assessment Letter Report for Naval Station San Diego, California.***

Holcomb, M., C. Yo, and S. Safe, 1988, "Biologic and Toxic Effects of Polychlorinated Dibenzo-p-dioxin and Dibenzofuran Cogeners in the Guinea Pig," ***Biochem. Pharm.***, 37:1535-1539.

Hvorslev, M. J., 1951, ***Time Lag and Soil Permeability in Ground Water Observations***, U.S. Army Corps of Engineers, Waterways Exp. Sta. Bull. 36, Vicksburg, MS.

Kociba, R. J. and O. Cabey, 1985, "Comparative Toxicity and Biologic Activity of Chlorinated Dibenzo-p-dioxins and Furans Relative to 2,3,7,8-Tetrachloro-dibenzo-p-dioxin (TCDD)," ***Chemosphere***, 14:649-660.

Leighton & Associates (L&A), 1986, ***Assessment of Soil and Ground Water Conditions at the Proposed Cold Storage Facility Site (P-038) and Proposed Classified Materials Building Site (P-181), and 32nd Street Naval Station, San Diego, California***, (February 11, 1986 revision).

Mason, G., T. Sawyer, B. Keys, S. Bandiera, M. Romkes, J. Piskorska-Pliszczymska, B. Zmudzka, and S. Safe, 1985, "Polychlorinated Dibenzofurans (PCDFs): Correlation Between ***in Vivo*** and ***in Vitro*** Structure-Activity Relationships," ***Toxicology***, 37:1-12.

Naval Energy and Environmental Support Activity, (NEESA) 21-004, February 1988, ***Verification Step Report Naval Station - Salvage Yard, San Diego, California***, Vol. 2.

Naval Energy and Environmental Support Activity (NEESA) 13-087, May 1986, ***Initial Assessment Study, Naval Station, San Diego, California***, prepared for the Environmental Restoration Department, U.S. Navy.

Poland, A. and J. C. Knutson, 1982, "2,3,7,8-Tetrachlorodibenzo-p-dioxin and Related Halogenated Aromatic Hydrocarbons: Examination of the Mechanism of Toxicity," ***Ann. Rev. Pharmacol. Toxicol.,*** 22:517-554.

Poland, A., W. F. Greenlee, and A. S. Kende, 1979, "Studies on the Mechanism of Toxicity of the Chlorinated Dibenzo-p-dioxins and Related Compounds," ***Ann. N.Y. Acad. Sci.,*** 320:214-230.

Ryu, J. E., E. E. Ziegler, S. E. Nelson, and S. J. Formon, 1983, "Dietary intake of lead and blood lead concentration in early infancy," ***American Journal of Diseases of Children,*** Vol. 137, pp. 886-891.

State of California, October 1989, "Leaking Underground Fuel Tank (LUFT) Field Manual," State Water Resources Control Board, Sacramento, California.

Sandmeyer, E. E., 1981, "Aliphatic Hydrocarbons" in ***Patty's Industrial Hygiene and Toxicology,*** 3rd revised edition, G. D. Clayton and F. E. Clayton, Eds., John Wiley & Sons, New York.

U.S. EPA, 1991a, Integrated Risk Information System (IRIS), on-line data base updated quarterly, maintained by Environmental Criteria and Assessment Office, Cincinnati, Ohio.

U.S. EPA, 1991b, "Health Effects Assessment Summary Tables. Annual FY-1991," Office of Research and Development, Office of Emergency and Remedial Response, OERR 9200.6-303(9-1), NTIS Publication No. PB91-921199, January 1991.

U.S. EPA, 1990, "40 CFR Parts 264, 265, 270, and 271; Corrective Action for Solid Waste Management Units at Hazardous Waste Management Facilities; Proposed Rule; Appendix E: Examples of Calculations of Action Levels," ***Federal Register,*** Vol. 55(145):3-865-30873, March 8, 1990.

U.S. EPA, 1989a, ***Risk Assessment Guidance for Superfund Volume I Human Health Evaluation Manual, Part A,*** (Interim Final), Office of Solid Waste and Emergency Response, Washington, D.C., December 1989.

U.S. EPA, 1989b, "Interim Procedures for Estimating Risks Associated with Exposures to Mixtures of Chlorinated Dibenzo-p-Dioxins and -Dibenzofurans (CDDs and CDFs) and 1989 Update. EPA/625/3-89/016.

U.S. EPA, 1989c, ***CERCLA Compliance with Other Laws Manual; Part II***, Office of Emergency and Remedial Response and Office of Solid Waste and Emergency Responses, EPA/540/G-89/009.

U.S. EPA, 1988a, ***CERCLA Compliance with Other Laws Manual***, Office of Emergency and Remedial Response and Office of Solid Waste and Emergency Responses, EPA/540/G-89/006, Interim Final.

U.S. EPA, 1988b, ***Guidance for Conducting Remedial Investigations and Feasibility Studies Under CERCLA***, Office of Emergency and Remedial Response and Office of Solid Waste and Emergency Responses, EPA/540/G-89/004.

U.S. EPA, 1987a, "Superfund Program: Interim Guidance on Compliance with Applicable or Relevant and Appropriate Requirements," ***Federal Register***, 52(166): 32496-32499.

U.S. EPA, 1987b, Spill Cleanup Policy." 52 FR: 10688 (April 2, 1987).

U.S. EPA, 1986, ***Quality Criteria for Water***, Office of Water Regulations and Standards, Washington, D.C., EPA 440/5-86-001.

Western Division Naval Facilities Engineering Command (WESTDIV), 1987, "Naval Station, San Diego - Capital Improvements Plan."

Western Division Naval Facilities Engineering Command (WESTDIV), 1985, "Master Plan - Naval Station San Diego, CA."

Woodward-Clyde Consultants, 1987a, ***Final Report Geotechnical and Hazardous Waste Investigation FY-1989 MCON Project P-002 Fire Fighting Training Facility, Navy Fleet Training Center, San Diego, California***, August 26, 1987.

Woodward-Clyde Consultants, 1987b, ***Geotechnical Investigation for the Proposed Public Works Shop P-072 32nd Street Naval Station, San Diego***, California, revision, February 25, 1987.

APPENDIX A

INTERNATIONAL TECHNOLOGY CORPORATION

VARIANCE LOG

PROJECT NUMBER 409767 PAGE 1 OF 1

PROJECT NAME NAVSTA

DATE	VARIANCE GRANTED AND APPLICABLE DOCUMENT	RESPONSIBLE INDIVIDUAL
1/14/91	Var # 1 - move background well at Mole Pier/Work Plan	G. Poulter Dennis Lessig
1/23/91	Var #2 - Second HNU /Work Plan	G. Poulter Dennis Lessig
1/31/91	Var #3 - Var #6 - 18" ϕ well apron/Work Plan	G. Poulter Jerry Jones
2/6/91	Var #7 - Methanol/source rinse/Work Plan	G. Poulter Jerry Jones

CHRONOLOGIC LIST OF PROJECT VARIANCES

INTERNATIONAL TECHNOLOGY CORPORATION

VARIANCE NO. 1

VARIANCE LOG

PROJECT NO. 409767 PAGE 1 OF

PROJECT NAME NAVSTA DATE: 1/14/91

VARIANCE (INCLUDE JUSTIFICATION)

Background well at Mole Pier is located in a PCB yard - Mike Shepherd and Sherry Carr suggested we move it to the northeast corner of building 3213. I called Dennis Lessig for permission. He talked it over with Martin Mariotte and was granted approval.

APPLICABLE DOCUMENT:

CC:

REQUESTED BY: Colleen B. Poulte DATE: 1/14/91

APPROVED BY: Dennis Lessig DATE: 1/14/91
verbally
Project Manager

Robert Moore DATE: 1/23/91
Quality Assurance Officer

Dennis C. Lessig DATE: 3/19/91

409419-7

FIGURE C-7

INTERNATIONAL TECHNOLOGY CORPORATION

VARIANCE NO. 2

VARIANCE LOG

PROJECT NO. NAUSTA PAGE 1 OF 1

PROJECT NAME 405767 DATE: 1/23/91

VARIANCE (INCLUDE JUSTIFICATION)

Work Plan did not required 2nd photo tip (HNu). I felt it necessary to have a second one so as to have one HNu per rig.

APPLICABLE DOCUMENT:

CC:

REQUESTED BY: [illegible] DATE: 1/23/91

APPROVED BY: _____ DATE: _____

Project Manager

[illegible] DATE: 1/23/91

Quality Assurance Officer

[illegible] DATE: 3/19/91

FIGURE C-7

INTERNATIONAL TECHNOLOGY CORPORATION

VARIANCE NO. 3

VARIANCE LOG

PROJECT NO. 404767 PAGE 1 OF 1

PROJECT NAME NAUSTA DATE: 1/~~29~~ 31/91

VARIANCE (INCLUDE JUSTIFICATION)

Variance was granted from Jerry Jones (Martin Marietta) to reduce the concrete well apron requiring a radius of 3 feet + 6 inches thick to a radius of ~~18~~ 9" + 6" thick for NS4-MW04.

APPLICABLE DOCUMENT:

NAUSTA Workplan - oct/1990

CC:

REQUESTED BY: Gillian B. Poulte DATE: 1/~~29~~ 31/91

APPROVED BY: _____ DATE: _____
Project Manager

_____ DATE: _____
Quality Assurance Officer

Dennis C Tissey DATE: 3/14/91

400619-7

FIGURE C-7

INTERNATIONAL TECHNOLOGY CORPORATION

VARIANCE NO. 4

VARIANCE LOG

PROJECT NO. 409767 PAGE 1 OF 1

PROJECT NAME NAVSTA DATE: 1/~~29~~ 31/91

VARIANCE (INCLUDE JUSTIFICATION)

Variance was granted from Jerry Jones (Martin Marietta) to reduce the concrete well apron requiring a radius of 3' x 6" to a radius of ~~18~~ 9" x 6" for NS4-MW01.
6BP

APPLICABLE DOCUMENT:

CC:

REQUESTED BY: Gilbert B. Poulter DATE: 1/~~29~~ 31/91

APPROVED BY: _____ DATE: _____
Project Manager

_____ DATE: _____
Quality Assurance Officer

[signature] DATE: 3/19/91

409819-7

FIGURE C-7

INTERNATIONAL TECHNOLOGY CORPORATION

VARIANCE NO. 5

VARIANCE LOG

PROJECT NO. NAVSTA 1404767 PAGE 1 OF 1

PROJECT NAME NAVSTA DATE: 1/31/91

VARIANCE (INCLUDE JUSTIFICATION)

Variance was granted from Jerry Jones (Martin Marietta) to reduce the concrete well apron requiring a radius of 3' x 6" to a radius of ~~18~~ 9" x 6" for NS2-MW10.
6.P.P

APPLICABLE DOCUMENT:

CC:

REQUESTED BY: Allan B. Poulter DATE: 1/31/91

APPROVED BY: _____ DATE: _____
Project Manager

_____ DATE: _____
Quality Assurance Officer

[signature] DATE: 3/19/91

400019-7

FIGURE C-7

INTERNATIONAL TECHNOLOGY CORPORATION

VARIANCE NO. 6

VARIANCE LOG

PROJECT NO. 409767 PAGE 1 OF 1

PROJECT NAME NAVSTA DATE: 1/31/91

VARIANCE (INCLUDE JUSTIFICATION)

Variance was granted from Terry Jones (Martin Marietta) to reduce the concrete well apron requiring a radius of 3' x 6" to a radius of 9" x 3" for NS2-MW 12.

APPLICABLE DOCUMENT:

CC:

REQUESTED BY: Gillian B Poulter DATE: 1/31/91

APPROVED BY: _____ DATE: _____
Project Manager

_____ DATE: _____
Quality Assurance Officer

[signature] DATE: 3/19/91

409819-7

FIGURE C-7

INTERNATIONAL TECHNOLOGY CORPORATION

VARIANCE NO. 7

VARIANCE LOG

PROJECT NO. 409767 PAGE 1 OF 1

PROJECT NAME NAUSTA DATE: 2/6/91

VARIANCE (INCLUDE JUSTIFICATION)

I asked Dennis Lessig about getting a variance on the source rinse for methanol. ITAS Corritos doesn't run that analysis. Dennis asked Jerry Jones (M.M.) + Jerry said to save a bottle of methanol until job is finished + this would suffice.

APPLICABLE DOCUMENT:

CC:

REQUESTED BY: Gillian P. Poulter DATE: 2/6/91

APPROVED BY: _____ DATE: _____
Project Manager

_____ DATE: _____
Quality Assurance Officer

[signature] DATE: 3/19/91

400819-7

APPENDIX B

FIELD LOG OF BORING NS2-BH1

PROJECT NUMBER: 409767-4-33	PROJECT NAME: NAVSTA	SHEET 1 OF 1
ENGINEER/GEOLOGIST: K. KAZMERSKI	COORDINATES:	
GROUND SURF. ELEV.:	GWL Depth 12.08' Date/Time 2-4/9:35	DATE STARTED: 2-4-91
TOP OF CASING ELEV.:	GWL Depth 11.34 Date/Time 2-4/10:45	DATE COMPLETED: 2-4-91

DEPTH, FT.	PENETROMETER BLOWS/FOOT PSI	SAMPLE TYPE AND NO.	USCS	MEASURED CONSISTENCY TSF	RECOVERY %	RINGS SAVED/ OVA READINGS	WELL CASING	WELL BACKFILL	Consistency/Color/Minor Material/Major Material/Moisture/Additional Descript.
									- HNU Readings of 5-10 PPM at top of open borehole - Strong hydrocarbon odor at open borehole - Kick interface indicates no free product but probe coated with heavy hydrocarbons 6"-8"
	500 to 700		SM		75	0			Gravel (1" to 2") over a loose to medium dense, yellowish brown (10YR 5/6) fine to medium silty sand (SM) with gravel
			CH						Stiff, olive (5Y 5/4) clay (CH)
		501 X	SM						Medium dense, dark olive brown (2.5Y 3/3) fine silty sand with shells and gravel, glass, broken porcelain, with dark streaking in soil
5	1000				60	•			Loose to medium dense, dark yellowish brown (10YR 5/6 to black (10YR 2/1) fine silty sand to coarse to medium sand (SM-SP) with gravel to 3", glass chips, nails, copper wire, charred wood, red brick chips, matted fibers. (Possible burn pit)
10	500 to 700				70		1-2		Medium stiff, dark olive gray (5Y 3/2) fine silty sand to silt (SC-MH) with mica, gradual to a medium stiff, dark olive gray (5Y 3/2) fat clay (CH) wet
		502 X	SP-SM				50 1-2		Loose to medium dense, dark olive gray to black (5Y 3/2 - 2.5/2) medium sand (SP) with silt (SM) wet, with mica. Strong hydrocarbon odor, (free product?)
15									TD = 15 ft
20									

FIELD LOG OF BORING NS2-BH2

PROJECT NUMBER: 409767-4-33	PROJECT NAME: NAVSTA SAN DIEGO	SHEET 1 OF 1
ENGINEER/GEOLOGIST: K. KAZMERSKI	COORDINATES:	
GROUND SURF. ELEV.:	GWL Depth 11.62 Date/Time 1325	DATE STARTED: 2-4-91
TOP OF CASING ELEV.:	Depth 10.92 Date/Time 13.35	DATE COMPLETED: 2-4-91
	10.80 1400	

DEPTH, FT.	BLOWS/FOOT	SAMPLE TYPE AND NO.	USCS	MEASURED CONSISTENCY TSF	RECOVERY %	RINGS SAVED/ OVA READINGS	WELL CASING	WELL BACKFILL	Consistency/Color/Minor Material/Major Material/Moisture/Additional Descript.
									-HNU READING AT OPEN BOREHOLE 10-15 PPM - KRUK INTERFACE PROBE INDICATED NO FREE PRODUCT BUT PROBE COVERED WITH THICK HYDROCARBON FILM.
	750		SM		60	80			ASPHALT 4" OVER GRAVEL BED OVER A COARSE SAND AND GRAVEL GRADING TO A MEDIUM STIFF DARK OLIVE BROWN (2.5Y 3/3) SILTY SAND (SM) MOIST WITH SOME SHELLS, CHARRED WOOD AND GRAVEL AT 1.5' TO 2' BG
			CH						MEDIUM STIFF TO STIFF, DARK OLIVE GRAY, MOIST FAT CLAY (CH) WITH MICA
5	750		CH		55				— SAME AS ABOVE —
		SO1	SP			5 5-10			LOOSE, BLACK (2.5Y 2/0), ~~[illegible]~~ MEDIUM SAND (SP) WITH CHARRED GRAVEL, AND SHELLS
			CL			5			VERY STIFF, BLACK (2.5Y/2/0) SANDY CLAY WITH CHIPS OF PORCELAIN, CONCRETE, AND SHELLS
	1000								
10	750	SO2 SO2	SC		60	50 30 40 30 10			DENSE TO VERY DENSE CLAYEY SAND, BLACK TO VERY DARK GRAY (2.5Y 3/3) (SC) WITH CHARRED WOODS CHIPS AND HEAT CEMENTED GRAVEL, STRONG HYDROCARBON ODOR, AND SHEEN IN SAMPLING BARREL, COBBLE TO 3" WET, MATTED FIBERS.
									LOOSE TO MEDIUM DENSE, OLIVE BROWN (2.5Y 4/3) FINE SILTY SAND WITH SHELLS, WET (SM)
15									TD=15 ft

FIELD LOG OF BORING N52-BH3

PROJECT NUMBER: 409767.04.33	PROJECT NAME: NAVSTA		SHEET 1 OF 1
ENGINEER/GEOLOGIST: Dave Carson	COORDINATES: N/A		
GROUND SURF. ELEV.: N/A	GWL Depth	Date/Time	DATE STARTED: 2/4/91
TOP OF CASING ELEV.: N/A	GWL Depth 11'	Date/Time 2/4/91/1500	DATE COMPLETED: 2/4/91

DEPTH, FT.	BLOWS/FOOT	SAMPLE TYPE AND NO.	USCS	MEASURED CONSISTENCY TSF	RECOVERY	RINGS SAVED/ ~~OVA~~ HNU READINGS (ppm)	WELL CASING	WELL BACKFILL	Consistency/Color/Minor Material/Major Material/Moisture/Additional Descript.
									3"? ASPHALT
			SP		75	0-5		SP	.5-2.5 V. DARK GRAYISH BRN (10YR/3/2) CLAYEY SAND, FINE-MED SLIGHTLY MOIST
			OH					OH	2.5-3.0 SOFT BLACK (YR 10-2/1) CLAY, MOIST
			SW					SW	(3-5.) VARIGATED LIGHT TO DK GRAY, M.-DENSE, GRAVELLY SAND, SLIGHTLY MOIST. ANGULAR PEBBLS UPT 3cm. (CONCRETE FRAGS)
5			SC		60			SC	V. DK GRAYISH BRN (10YR/3/2) LOOSE SAND W/ SOME CLAY, MICA FINE-COARSE g. (MOIST)
		N52-BH3-SO1-10	SP			NO READING OBTAINABLE		SP	V. PALE BRN (10YR-7/4) LOOSE SAND; FINE TO COARSE, W/SHELL FRAGS. FINING & DARKENING DOWNWARD. (SLIGHTLY MOIST)
									7.25-8' LIGHT, VARIGATED, BANDED COARSE, VERY LOOSE SAND.
10		N52-BH3-SO2-15	SP		45	20-45		SP	V. LOOSE DARK BRN - V. DK BRN (GRAYISH (10YR-3/3)) SAND, MED., W/SHELL FRAGMENTS (10YR-3/1) ~1ST G.W. @ ~11'
			SP					SP	V. LOOSE, V. DK. GRAY, SHELL FRAG BEARING SAND, SATURATED, COARSE TO VERY COARSE. STRONG ODOR.
									?
15									~~BOB~~ TD = 15 Feet

NOTE: FIRST 5' BACKFILLED MATERIALS

FIELD LOG OF BORING NS2-BH4

PROJECT NUMBER: 409767-4-33	PROJECT NAME: NAVSTA, SAN DIEGO		SHEET 1 OF 1
ENGINEER/GEOLOGIST: K. KAZMERSKI	COORDINATES:		
GROUND SURF. ELEV.:	GWL Depth 11.62' Date/Time 1108	DATE STARTED: 2-5-91	
TOP OF CASING ELEV.:	GWL Depth 10.88' Date/Time 1135	DATE COMPLETED: 2-5-91	

DEPTH, FT.	~~PENETRATION BLOWS/6 INCH~~	SAMPLE TYPE AND NO.	USCS	MEASURED CONSISTENCY TSF	RECOVERY %	RINGS SAVED/ ~~OVA~~ HNU READINGS	WELL CASING	WELL BACKFILL	Consistency/Color/Minor Material/Major Material/Moisture/Additional Descript.
									-HNU READING OF 5 PPM AT TOP OF BOREHOLE WITH AUGERS IN PLACE - HYDROCARBON FILM ON WL PROBE - KECK INTERFACE PROBE INDICATES NO FREE PRODUCT BUT PROBE TIP COVERED WITH HYDROCARBON FILM.
			SM / SC		80		0		CONCRETE (12 IN) OVER GRAVEL 1" OVER A MEDIUM DENSE, LIGHT OLIVE BROWN (2.5Y 5/6) FINE SILTY SAND TO CLAYEY SAND MOIST, WITH GRAVEL, SOME SHELLS
		S01							
									SAME AS ABOVE
5					80				SAME AS ABOVE
			CH	6'			45		MEDIUM STIFF, DARK OLIVE GRAY (5Y 3/2), FAT CLAY (CH) WITH MICA UNIFORM
		S01	SM				100 70 60		FIBER MAT OVER LOOSE TO MEDIUM DENSE, BLACK (2.5YR 2.5/0) FINE SILTY SAND (SM), WITH BLACK GRAVEL, GLASS, PORCELAIN, CHARRED WOOD, STRONG HYDROCARBON ODOR MOIST TO DAMP
10					50		100 TO 140		LOOSE TO MEDIUM DENSE BLACK (2.5YR 2.5/0) FINE SILTY SAND (SM) WITH BLACK GRAVEL, SHELLS, VERY STRONG HYDROCARBON ODOR TO ≈ 12.5 FT,
			CH						VERY STIFF TO HARD, VERY DARK GRAYISH BROWN (2.5Y (3/2)), CLAY (CH)
15									TD = 15 FT

FIELD LOG OF BORING NS2-BH5

PROJECT NUMBER: 409767-4-33	PROJECT NAME: NAV STA, SANDIEGO		SHEET 1 OF 1
ENGINEER/GEOLOGIST: K. KAZMERSKI	COORDINATES:		
GROUND SURF. ELEV.:	GWL Depth 11.5' Date/Time 845		DATE STARTED: 2-5-91
TOP OF CASING ELEV.:	GWL Depth 11.01' Date/Time 905		DATE COMPLETED: 2-5-91
	10.60' 920		

DEPTH, FT.	~~PENETRATION BLOWS/FOOT~~ PID	SAMPLE TYPE AND NO.	USCS	MEASURED CONSISTENCY TSF	RECOVERY %	RINGS SAVED/ ~~OVA~~ HNU READINGS	HNU WELL CASING	WELL BACKFILL	Consistency/Color/Minor Material/Major Material/Moisture/Additional Descript.
									HNU READING AT OPEN BOREHOLE WITH AUGERS REMOVED = SAM
	250				85		0		2" TO 3" OF ASPHALTIC CONCRETE OVER GRAVEL BED
		S03	SC						1" TO 24 OVER A LOOSE, DARK BROWN (10YR 3/3) MEDIUM CLAYEY SAND, MOIST (SC) WITH BLACK STREAKS
							30		MEDIUM STIFF TO STIFF, DARK OLIVE GRAY (5Y 3/2)
		S01	CH				60		FAT CLAY MOIST (CH) WITH MICA, HYDROCARBON ODOR 2' TO 3'
							20		DECREASING DOWNWARD
							5		
			CL				0		GRADING TO A LEAN CLAY (CL), DARK OLIVE GRAY (5Y 3/2)
5							1		MEDIUM STIFF WITH MICA, HYDRO CARBON ODOR INCREASING
	280				85		5		TO 1'
							15		
		S02					20		
							15		GRADING TO A MEDIUM STIFF, DARK OLIVE GRAY (5Y 3/2)
			CH				5		FAT CLAY (CH) MOIST
							1		
			SW						LOOSE, LIGHT YELLOWISH BROWN (2.5Y 6/3) COARSE TO MEDIUM SAND, WELL GRADED, MOIST (SW) WITH ABUNDANT SHELLS
10	280				65		0		
			SW						SAME AS ABOVE WITH THIN DARK BROWN CLAY LENSES
15									
									TD = 15 ft

FIELD LOG OF BORING NS2-BHG-

PROJECT NUMBER: 409767.04.33	PROJECT NAME: NAV STA		SHEET 1 OF 1
ENGINEER/GEOLOGIST: Dana W. Gerson	COORDINATES: NM		
GROUND SURF. ELEV.: NM	GWL Depth	Date/Time	DATE STARTED: 2/5/91
TOP OF CASING ELEV.: NM	GWL Depth	Date/Time	DATE COMPLETED: 2/5/91

DEPTH, FT.	BLOWS/FOOT	SAMPLE TYPE AND NO.	USCS	MEASURED CONSISTENCY TSF	RECOVERY	RINGS SAVED/ ~~OVA~~ Hnu READINGS (ppm)	WELL CASING	WELL BACKFILL	Consistency/Color/Minor Material/Major Material/Moisture/Additional Descript.
									AIR MONITORING: ~2 ppm AMBIENT (WELDING OPS) GROUNDWATER @ ~13', IN COARSE SAND
					35	~2*			0-0.3(?) ASPHALT
			SP		↓	↓			LOOSE, DK. YELLOWISH BRN (10YR-4/4) GRAVELLY SAND (FILL) ROUNDED TO ANGULAR PEBBLES TO 2cm.
			MH						MED-STIFF, V. DK. GRAY-BRN (10YR-3/2) GRAVELY ~~CLAY~~/SILT + SAND (?), ONLY SLIGHTLY MOIST. LAMINATED BY COLOR HUES; (SILT + SAND INTERBEDDED)
									~3-4.5 SOFT VERY DARK GRAY (10YR-3/1) MICACEOUS, GRAVEL-BEARING CLAY (EST. FROM CUTTINGS) VERY MOIST
			CH						
5									~4.5-6.5
			SP		65	~2*			LOOSE, DK-YEL-BRN (10YR-3/4) SAND, W/SHELL FRAG) MOIST
		NS2-BHG-SO1-10							
									6.5-7.5 SOFT TO STIFF, V.DK-GRY-BRN (10YR-3/2) CLAY
			SW						7.5-8.5 MED-DENSE YELLOWISH BRN, SAND, FINE TO V. COARSE, ABUNDANT SHELL FRAG
									8.5-10.5(?)
			SM						MED-DNS, DK-BRN (10YR-3/3) MICACEOUS SILTY SAND, MOIST (PROBABLY W/SOME CLAY)
10					40	~2*			(?) 10.5-15
		NS2-BHG-SO2-10							LOOSE, DK-YL-BRN (10YR-3/4) GRAVELBRNG SAND, MOIST, W/SHELL FRAG MED-COARSE ~~w/ some clay~~
			SP						NO RECOVERY, BUT CUTTINGS ARE IDENTICAL TO SAMPLE G.W. ~ 13-[redacted] FEET
15									~~B.O.B.~~ TD - 15 Feet
									* AMBIENT AIR Hnu ≈ 2ppm. STRONG
20									

FIELD LOG OF BORING NS2-BH7

PROJECT NUMBER: 409767	PROJECT NAME: NAV STA		SHEET 1 OF 1
ENGINEER/GEOLOGIST: K. KAZMERSKI	COORDINATES:		
GROUND SURF. ELEV.:	GWL Depth 11.52	Date/Time 10:00	DATE STARTED: 2-6-91
TOP OF CASING ELEV.:	GWL Depth 9.50	Date/Time 10:25 → AUGERS REMOVED	DATE COMPLETED: 2-6-91

DEPTH, FT.	~~PRESSURE BLOWS/FOOT~~ PID	SAMPLE TYPE AND NO.	USCS	MEASURED CONSISTENCY TSF	RECOVERY %	RINGS SAVED/ ~~OVA~~ READINGS	~~HNU~~ WELL CASING	WELL BACKFILL	Consistency/Color/Minor Material/Major Material/Moisture/Additional Descript.
									HNU READING AT OPEN BOREHOLE WITH AUGERS IN PLACE - 0 PPM
	650		SM		90	0			GRAVEL (2") OVER A ~~FINE~~ LOOSE, GRAYISH BROWN (2.5Y 5/2) FINE, SILTY SAND WITH GRAVEL TO 10" DRY
			SC-SM						DENSE, OLIVE BROWN (2.5Y 4/3) CLAYEY SAND TO SILTY SAND, DRY (SC-SM) 16" THICK
			SP						LOOSE, LIGHT YELLOW BROWN (10YR 6/4), FINE SAND, (SP) POORLY GRADED, DRY, WITH SHELLS, MICA
			SP						GRADING TO A LOOSE, LIGHT YELLOW BROWN, MEDIUM TO COARSE SAND (SP) WITH ABUNDANT SHELLS
5	650				65	4			STIFF, OLIVE BROWN (2.5Y 4/3)
		S01 X				4			SAME AS ABOVE WITH CLAY LENSES (1" TO 3" THICK)
						5			TO 6'10", FAINT ODOR (SOLVENTS)
						5			
			SW			0			LOOSE, LIGHT OLIVE BROWN (2.5Y 5/4) SAND, WELL GRADED (COARSE TO FINE) WITH SHELLS AND MICA, MOIST (SW), NO ODOR
10	650		SW		65	0			LOOSE, OLIVE BROWN (2.5Y 4/3), COARSE TO FINE SAND WELL GRADED, WET, WITH ABUNDANT SHELLS AND MICA (SW), WITH SOFT, DARK BROWN (7.5YR 4/2) CLAY (CL)
		S02 X							LENSES (WEDGES), GRAVEL (TO 2")
			SM						GRADING TO A LOOSE, OLIVE BROWN (2.5Y 4/3) FINE SILTY SAND, WET, WITH MICA, SHELLS (SM)
15									TD = 15 ft
20									

FIELD LOG OF BORING NS2-BH8

PROJECT NUMBER: 409767	PROJECT NAME: NAVSTA		SHEET 1 OF 1
ENGINEER/GEOLOGIST: Dave Carson/KCW	COORDINATES: NM		
GROUND SURF. ELEV.: NM	GWL Depth	Date/Time	DATE STARTED: 2/6/91
TOP OF CASING ELEV.: NM	GWL Depth	Date/Time	DATE COMPLETED: 2/6/91

DEPTH, FT.	BLOWS/FOOT	SAMPLE TYPE AND NO.	USCS	MEASURED CONSISTENCY TSF	RECOVERY %	RINGS SAVED/ ~~OVA~~ HNU READINGS PPM	WELL CASING	WELL BACKFILL	Consistency/Color/Minor Material/Major Material/Moisture/Additional Descript.
									-BORING ACCOMPLISHED WITH 6" ID H.S.A.
									-AIR MONITORING BKGND: ____
									-DIRT/GRAVEL OPEN LOT
			SP		90	0			LOOSE, BRN(10YR-4/3) SAND & GRAVEL (MEDIUM GRAIN), DRY (FILL DIRT): ANGULAR PBLS, UP TO 3 cm. // GRAVEL ONLY MINOR AFTER 1ST FOOT.
		NS2-BH8-S01-5	SP						SAME AS ABOVE, BUT ONLY MINOR GRAVEL; WELL SORTED
									SHELL FRAGMENTS (IN CUTTINGS) INCREASE DOWNWARD
			SW (?)						LOOSE, BRN(10YR-4/3) SAND WITH GRAVEL, ABUNDANT SHELL FRAG, SLGT MOIST, ROUNDED PBLS TO 1.5 cm. SAND MED TO V. COARSE
5			GM TO SM		70	~1			5-6' MED-DENSE, DK. RED-BRN (5YR-3/2) SILTY, GRAVELLY SAND, ABUND SHELL FRAG, SLGT MOIST FORMS CLUMPS IN CUTTINGS, (MED TO COURSE SAND)
		NS2-BH8-S02-10	ML-CL						6-8' MED STIFF, V. DK. GRAYISH BRN (10YR-3/2) SANDY, SILTY CLAY, MOIST, ABUND SHELL FRAG
			SW						8-9.0' MED-DNS, BRN(10YR-5/3) SAND, ~~SATURATED~~ MOIST, MED TO VERY COURSE, ABUND SHELL FRAG
									9-15
10		NS2-BH8-S03-15	SP		40	100			LOOSE TO MED DNS, V. DK. GRAY(10YR-3/1) MICACEOUS SAND, SATURATED, MED TO COURSE GRN, POSS. SOME SILT
									VERY STRONG ODOR; HNU AT ~50 ppm RIGHT AT CUTTINGS
			~~SP~~						12-15 → GRADING DOWNWARD TO MED-GRAIN, AND VERY WELL SORTED.
			~~SC~~ SC			N/R			DENSE TO MED DENSE, DK BRN(7YR-3/3) CLAYEY SAND, SLGT MOIST, MED-GRN, V. WELL SORTED. (CONTAMINATED ZONE APPEARS TO REST ATOP THIS UNIT. CONTACT WITH ABOVE SAND GRADATIONAL; COLOR CHANGE FAIRLY SHARP)
15									~~B.O.H~~ TD
									HNU READINGS INSIDE AUGERS >300 ppm
20									

FIELD LOG OF BORING NS2-BH9

PROJECT NUMBER: 409767	PROJECT NAME: NAVSTA		SHEET 1 OF 1
ENGINEER/GEOLOGIST: R. KAZMERSKI	COORDINATES:		
GROUND SURF. ELEV.:	GWL Depth 13.86' Date/Time 1100		DATE STARTED: 2-7-91
TOP OF CASING ELEV.:	GWL Depth 11.00' Date/Time 1110		DATE COMPLETED: 2-7-91

AUGERS REMOVED

DEPTH, FT.	~~PRESSURE BLOWS/FOOT~~	SAMPLE TYPE AND NO.	USCS	MEASURED CONSISTENCY TSF	RECOVERY %	RINGS SAVED/ OVA READINGS	~~HNU PPM~~ WELL CASING	WELL BACKFILL	Consistency/Color/Minor Material/Major Material/Moisture/Additional Descript.
									HNU READING AT OPEN BOREHOLE TOP = 0 PPM
			SM		60	0			GRAVEL (2IN) OVER LOOSE TO MEDIUM DENSE, OLIVE BROWN (2.5Y 4/3), SILTY SAND (SM) WITH GRAVEL
		S01 X	SP-SM						LOOSE, LIGHT YELLOWISH BROWN (2.5Y 6/3) FINE SAND (SP) POORLY GRADED TO A FINE SILTY SAND (SM) WITH SHELLS, SOME CLAY BALLS
5					98	0			
			SM						LOOSE, GRAYISH BROWN (2.5Y 5/2), FINE SILTY SAND, MOIST (SM) WITH SHELLS
		S02 X	CL						MEDIUM STIFF DARK OLIVE GRAY (5Y 3/2) CLAY, MOIST (CL)
			SM						(SM) LOOSE, LIGHT OLIVE BROWN (2.5Y 5/3), FINE SILTY SAND, MOIST, (SM) WITH SHELLS INCREASING DOWNWARD
			SM						LOOSE, DARK GRAY (5Y 4/1) FINE SILTY SAND, MOIST NO SHELLS (SM)
10					95	0			
			SC						GRADING TO A LOOSE TO MEDIUM STIFF, DARK GRAY (5Y 4/1) CLAYEY SAND WITH SHELLS (SC)
			CH						GRADING TO A MEDIUM STIFF, DARK GRAYISH BROWN (2.5Y 4/2) CLAY (CH), WET
						1-2			LOOSE DARK GRAY (5Y 4/1) FINE TO MEDIUM SAND, WET, (SP) WITH ABUNDANT SHELLS
						1-2			
			CL						VERY STIFF, DARK YELLOWISH BROWN (10YR 4/6) CLAY (CL)
15									TD = 15 FT
20									

FIELD LOG OF BORING NS2-BH10

PROJECT NUMBER: 409767	PROJECT NAME: NAUSTA	SHEET 1 OF 1
ENGINEER/GEOLOGIST: K. KAZMERSKI	COORDINATES:	
GROUND SURF. ELEV.:	GWL Depth 14.40 Date/Time 850	DATE STARTED: 2-7-91
TOP OF CASING ELEV.:	GWL Depth 10.60 Date/Time 910 → AUGERS REMOVED	DATE COMPLETED: 2-7-91

DEPTH, FT.	~~BLOWS/FOOT~~ PRESSURE	SAMPLE TYPE AND NO.	USCS	MEASURED CONSISTENCY TSF	RECOVERY %	RINGS SAVED/ ~~OVA~~ READINGS HNU PPM	WELL CASING	WELL BACKFILL	Consistency/Color/Minor Material/Major Material/Moisture/Additional Descript. HNU READING AT OPEN BORE HOLE WITH AUGER REMOVED - 0 PPM
	400 to 500		SC - SM		85	0			GRAVEL (2 in) OVER LOOSE TO MEDIUM DENSE, OLIVE BROWN (2.5Y 4/3). SILTY SAND TO CLAYEY SAND WITH GRAVEL MOIST (SC-SM) DRY
			CH						STIFF, DARK GRAY (2.5Y 4/4) WITH MOTTLED DARK YELLOWISH BROWN (10YR 3/4) FAT CLAY (CH) 1'10"
			SM - SC						LOOSE TO MEDIUM DENSE, OLIVE BROWN (2.5Y 4/4) FINE SILTY SAND TO CLAYEY SAND WITH ABUNDANT SHELLS, WITH STIFF, DARK REDDISH BROWN (5YR 3/3) CLAY (CL) WEDGES MOIST
5	400				60	0			GRADING TO A DARK REDDISH BROWN (5YR 3/3) TO BROWN (10YR 5/3) CLAY TO 6' 2"
		S01	SM						LOOSE, OLIVE BROWN (2.5Y 4/4), FINE SILTY SAND (SM) WITH SHELLS (SM) MOIST
10	400	S02	SP SM - SC		95	0			LOOSE, OLIVE BROWN (2.5Y 4/4) MEDIUM SAND, POORLY GRADED (SP) WITH SHELL MOIST
									SOFT, DARK OLIVE GRAY (5Y 3/2), FINE SILTY SAND WITH TO CLAYEY SAND, WITH FEW SHELLS, WET (SM-SC)
			CL						HARD, DARK BROWN (7.5YR 3/3), CLAY (CL)
15									TD = 15 ft
20									

FIELD LOG OF BORING NS2 ~~M~~ BH 11

PROJECT NUMBER: 409767.04.33	PROJECT NAME: NAVSTA	SHEET 1 OF 1
ENGINEER/GEOLOGIST: Dana Carson	COORDINATES: NM	
GROUND SURF. ELEV.: NM	GWL Depth Date/Time	DATE STARTED: 2/5/91
TOP OF CASING ELEV.: NM	GWL Depth Date/Time	DATE COMPLETED: 2/5/91

DEPTH, FT.	BLOWS/FOOT	SAMPLE TYPE AND NO.	USCS	MEASURED CONSISTENCY TSF	RECOVERY	RINGS SAVED/ ~~OVA~~ HNU READINGS	WELL CASING	WELL BACKFILL	Consistency/Color/Minor Material/Major Material/Moisture/Additional Descript.
									- SUNNY, MID 60'S, STRONG WIND FROM N.W. - RECENT IRRIGATION PUDDLES @ SURFACE. - GROUND WATER 9.5(?) FEET
					80	?*			0.0.5 DARK REDDISH BRN TOPSOIL, V. F. GRAIN.
		NS2-BH11-S01-5	SM/SC ~~DK~~ ML-CL						BROWN (7.5YR-5/2-5/4) DWC SOFT, ~~DK BRN TO V. DK GRAY (10YR-3/4 to 3/1) MICACEOUS, CLAYEY~~ SILTY SAND ~~[illegible]~~ DWC, MOIST. VARIGATED COLOR 2-2.5 SOFT, DK BRN - V. DK GRAY MICACEOUS, ~~SILT~~ V. MOIST, W SOME CLAY 2.5-10 (BOB)
5		NS2-BH11-S02-10	SP		~60				LOOSE, DK GRAYISH BRN TO DK GRAY (10YR-4/2 to 4/1) MEDIUM SAND, MOIST, MINOR SHELL FRAGMENTS
10									POSS. G.W. HERE (9.5')
									~~B.O.B.~~ TD ~~10~~ 10 Feet
15									
						*			

HNU NOT RESPONDING

FIELD LOG OF BORING NS2-BH12

PROJECT NUMBER: 409767	PROJECT NAME: NAVSTA, SAN DIEGO		SHEET 1 OF 1
ENGINEER/GEOLOGIST: K. KAZMERSKI	COORDINATES:		
GROUND SURF. ELEV.:	GWL Depth 11.23 Date/Time 15:20		DATE STARTED: 2-5-91
TOP OF CASING ELEV.:	GWL Depth 11.50 Date/Time 15:30		DATE COMPLETED: 2-5-91
	11.40	1545 (WITH AUGERS REMOVED)	

DEPTH, FT.	~~PRESSURE BLOWS/FOOT~~	SAMPLE TYPE AND NO.	USCS	MEASURED CONSISTENCY TSF	RECOVERY %	RINGS SAVED/ ~~OVA~~ READINGS	~~NA~~ PPM WELL CASING	WELL BACKFILL	Consistency/Color/Minor Material/Major Material/Moisture/Additional Descript.
									-HNU READING AT OPENHOLE — 0 PPM - NO INDICATION OF HYDROCARBON ODOR OR FILM ON WL PROBE
			SC		80		0		MEDIUM DENSE TO DENSE, LIGHT YELLOWISH BROWN TO BROWN (10YR 6/4 - 5/3) CLAYEY SAND (SC) TO FINE SILTY SAND (SM) WITH GRAVEL AND SHELLS, NUMEROUS SMALL ROOTS
		S01	CH-CL						VERY STIFF TO HARD, OLIVE BROWN TO BROWN (10YR 5/3 - 2.5Y 4/3) CLAY (CH) TO SAND CLAY (CL) WITH MICA
5					95		0		
			CL						- SAME AS ABOVE
			SP						LOOSE, LIGHT OLIVE BROWN (2.5Y 5/4) COARSE TO MEDIUM SAND (SP) MOIST WITH ABUNDANT SHELLS
10					00		0		SAME AS ABOVE WITH VERY STIFF, DARK BLUE/GREEN AND BROWN CLAY LENSES (1" TO 3/4") (CH), MOIST TO DAMP
		S02	SP						LOOSE, OLIVE BROWN (2.5Y 4/3), MEDIUM, POORLY GRADED SAND (SP) MOIST TO DAMP WITH ABUNDANT SHELLS
15									TD = 15 FT
20									

FIELD LOG OF BORING NS2-BH13

PROJECT NUMBER: 409767	PROJECT NAME: NAVSTA	SHEET 1 OF 1
ENGINEER/GEOLOGIST: Y. Lu, D. Carson	COORDINATES: NM	
GROUND SURF. ELEV.: NM	GWL Depth / Date/Time	DATE STARTED: 2/6/91
TOP OF CASING ELEV.: NM	GWL Depth / Date/Time	DATE COMPLETED: 2/6/91

Consistency/Color/Minor Material/Major Material/Moisture/Additional Descript.
- Boring drilled w/ a 6" (OD) Hollow stem Augers.
- Air monitoring background = 0 ppm.
- DIRT/GRAVEL OPEN LOT
- GROUND WATER AT ~13.5 FEET

DEPTH, FT.	BLOWS/FOOT	SAMPLE TYPE AND NO.	USCS	MEASURED CONSISTENCY TSF	RECOVERY %	RINGS SAVED/ ~~OVA~~ READINGS ppm	WELL CASING	WELL BACKFILL	Consistency/Color/Minor Material/Major Material/Moisture/Additional Descript.
		NS2-BH13-S02-5	SP		80	0			0-1.5' LOOSE, DK. YEL. BRN (10YR-3/4) GRAVELLY SAND, DRY
			SP						1.5-4' LOOSE, LT. OLIVE BRN (2.5Y-5/4) CLEAN, MEDIUM-FINE SAND, DRY, VERY WELL SORTED
		NS2-BH13-S01-10	SP to SW						4-5' LOOSE, BRN (10YR-5/3) CLEAN, FINE TO COARSE SAND, SLGT MOIST, W/ ABUNDANT SHELL FRAGS
5			SP		15	0			5-14' GRADES INTO... LOOSE, V. DK. GRAYISH BRN (10YR-3/2) CLEAN, MEDIUM SAND, MOIST, WELL SORTED, BUT WITH ABUNDANT SHELL FRAGMENTS
									NO RECOVERY, BUT CUTTINGS + SAMPLE IDENTICAL
10					40	0			
									SAME AS ABOVE; VERY SATURATED ∇ FIRST G.W. @ ~13.5 FEET
15			SM OR MH					~~B.O.B~~ TD	14-15' SOFT, V. DK. GRAY TO DK BROWN (10YR-3/1 TO 3/3), VARIGATED, (POSSIBLY CLAYEY) ~~SANDY~~ VARIABLY SANDY SILT, AND V. FINE SAND. BEHAVES PLASTICALLY. VISIBLY LAMINATED, STRONG COLOR CONTRAST WITH OVERLYING GRAY SAND. (MAY BE "BAY DEPOSITS") MICA'S LINE UP HORIZONTALLY: NATURAL MATERIAL.
20									

FIELD LOG OF BORING NS2-BH14

PROJECT NUMBER: 409767	PROJECT NAME: NAVSTA		SHEET 1 OF 1
ENGINEER/GEOLOGIST: K. KAZMERSKI	COORDINATES:		
GROUND SURF. ELEV.:	GWL Depth 14.0' Date/Time 1320		DATE STARTED: 2-7-91
TOP OF CASING ELEV.:	GWL Depth 10.8' Date/Time 1335 → AUGERS REMOVED		DATE COMPLETED: 2-7-91

DEPTH, FT.	~~PRESSURE BLOWS/FOOT~~ PSI	SAMPLE TYPE AND NO.	USCS	MEASURED CONSISTENCY TSF	RECOVERY %	RINGS SAVED/ OVA READINGS	WELL CASING	WELL BACKFILL	Consistency/Color/Minor Material/Major Material/Moisture/Additional Descript.
									HNU READING OF 0 PPM AT OPEN BOREHOLE
	500		SM		90	0			GRAVEL (2 in) OVER A MEDIUM DENSE, DARK BROWN (10YR 4/3) FINE SILTY SAND WITH GRAVEL (SM) TO 4.0 ft. SOME MINOR SHELLS, CLAY BALLS.
			CL						VERY STIFF TO HARD, DARK OLIVE GRAY (5Y 3/2), CLAY (CL) GRADING TO
5	500		ML-SM		85	0			MEDIUM DENSE, DARK OLIVE GRAY SILT TO SILTY SAND, MOIST (ML-SM) GRADING TO A DARK OLIVE GRAY LEAN TO FAT CLAY (CL-CH), MOIST, MINOR SHELLS
		SO1	CL-CH						
		SO1	SM						LOOSE, OLIVE BROWN (2.5Y 4/4), FINE SILTY SAND MOIST TO DAMP, ABUNDANT SHELLS (SM), WITH MEDIUM STIFF, DARK YELLOWISH BROWN (10YR 4/4) CLAY LENS (1")
10	500		ML-CH		95	0			GRADING TO a SOFT TO MEDIUM STIFF, DARK OLIVE BROWN (2.5Y 3/3) SILT (ML) TO CLAY (CH), WET, WITH MICA, WET
			SP						LOOSE, DARK OLIVE (5Y 3/2) FINE SAND, POORLY GRADED (SP) WITH INCREASING SHELL DOWNWARD, WET
			CL						HARD, DARK BROWN (10YR 3/3) CLAY (CL) MOIST
15									TD = 15'
20									

FIELD LOG OF BORING NS2-BH15

PROJECT NUMBER: 409767	PROJECT NAME: NAVSTA		SHEET 1 OF 1
ENGINEER/GEOLOGIST: K. KAZMERSKI	COORDINATES:		
GROUND SURF. ELEV.:	GWL Depth 13.30	Date/Time 12:00	DATE STARTED: 2-6-91
TOP OF CASING ELEV.:	GWL Depth 9.52	Date/Time 1215 → AUGERS REMOVED	DATE COMPLETED: 2-6-91

DEPTH, FT.	~~PROGRESS BLOWS/FOOT~~	SAMPLE TYPE AND NO.	USCS	MEASURED CONSISTENCY TSF	RECOVERY %	RINGS SAVED/ OVA READINGS	WELL CASING	WELL BACKFILL	Consistency/Color/Minor Material/Major Material/Moisture/Additional Descript.
									HNU READING AT OPEN BOREHOLE WITH AUGERS REMOVED - 0 PPM
	250 TO 400	S01	SM SC		65	0			GRAVEL (1" TO 2") OVER A LOOSE, DARK BROWN (10YR 4/3) FINE SILTY SAND WITH GRAVEL TO CLAYEY SAND (SM-SC)
			SM						GRADING TO A LOOSE, OLIVE GRAY (5Y 5/2) FINE SILTY SANDY WITH ABUNDANT SHELLS, MOIST, (SM) WITH MEDIUM STIFF, DARK OLIVE BROWN (2.5Y 3/3) CLAY (CL) LENSES (2") AT 3' 3"
5	250 TO 400		SM		60	0			- SAME AS ABOVE - (NO CLAYS) UNIFORM
			SM						- SAME AS ABOVE (NO CLAYS) - DAMP
10	250		SM		95	0			LOOSE, DARK OLIVE GRAY (5Y 3/2), FINE SILTY SAND WET (SM) WITH MICA
			CH						SOFT TO MEDIUM STIFF, DARK OLIVE GRAY (5Y 3/2) FAT CLAY (CH), WET, MICA
			CL						MEDIUM DENSE, DARK GRAY (5Y 4/1) MEDIUM SAND POORLY GRADED (SP) WITH SHELLS (12' TO 12'6") HARD, DARK YELLOW BROWN (10YR 4/6) CLAY (CL), DRY UNIFORM
15									TD = 15 ft
20									

FIELD LOG OF BORING NS2-MW10

PROJECT NUMBER: 409767	PROJECT NAME: NAVSTA	SHEET 1 OF 2
ENGINEER/GEOLOGIST: Y. Lu	COORDINATES: NM	
GROUND SURF. ELEV.: NM	GWL Depth 10' Date/Time 1030	DATE STARTED: 2/4/91
TOP OF CASING ELEV.: NM	GWL Depth 10.30 Date/Time 1100	DATE COMPLETED: 2/4/91

DEPTH, FT.	BLOWS/FOOT	SAMPLE TYPE AND NO.	USCS	MEASURED CONSISTENCY TSF	RECOVERY %	RINGS SAVED/ ~~OVA~~ READINGS ppm	WELL CASING	WELL BACKFILL	Consistency/Color/Minor Material/Major Material/Moisture/Additional Descript.
									- Air monitoring background = 0 ppm. (0920)
									- GW measured from ground surface using an electronic water meter.
									- 10" (OD) augers were armed to drill to 21' deep.
									- A metal well casing was mounted on ground to secure the well.
					70	0	4" SCH 40 Blank PVC	Concrete	3" ASPHALT.
		MW10-S01-5	SW					Bentonite Seal	Dense, dk brn (10YR 3/3) SAND, dry; fine to ~~med~~ coarse grained sand w/ gravels to 1 cm in diameter, angular to subangular. Abundant shells ~~(Hydraulic fills)~~. Some concrete debries found (Recent fills).
									Same as above. Concrete debries to 3 cm in diameter found.
5		MW10-S02-10	SP		60	5			Dense, dk brn (10YR 3/3) fine SAND, moist; abundant mica and shell, little gravels and coarse sand.
									Same as above, with increase in water contents soils at ~9' have strong organic vapor odor. Air monitoring = 150 ppm
									GW first encountered @ ~10'.
10		MW10-S03-15	SP		20	45	4" SCH 40 PVC, 0.010" slot screen	Lonestar Sand	Dense, V. dk gray (10YR 3/1) SAND, wet; med to coarse grained. Very little gravels. Some clay. abundant shells. Strong organic vapor odor. Free products found in the top 1 1/2 feet of cored sample.
									Same as above (estimated from soil cuttings). Sand saturated w/ water.
15					20	45			Air monitoring = 80 ppm
									~~TOD = 21.0'~~
			ml					* 0/30	Stiff, V. dk brn (10YR 3/1) clayey SILT, wet; abundant mica, some shell. (estimated from soil cuttings)
20									TOD = 21.0'

FIGURE C-3

p. 2 of 2

MONITORING WELL CONSTRUCTION LOG

NS2- mW10

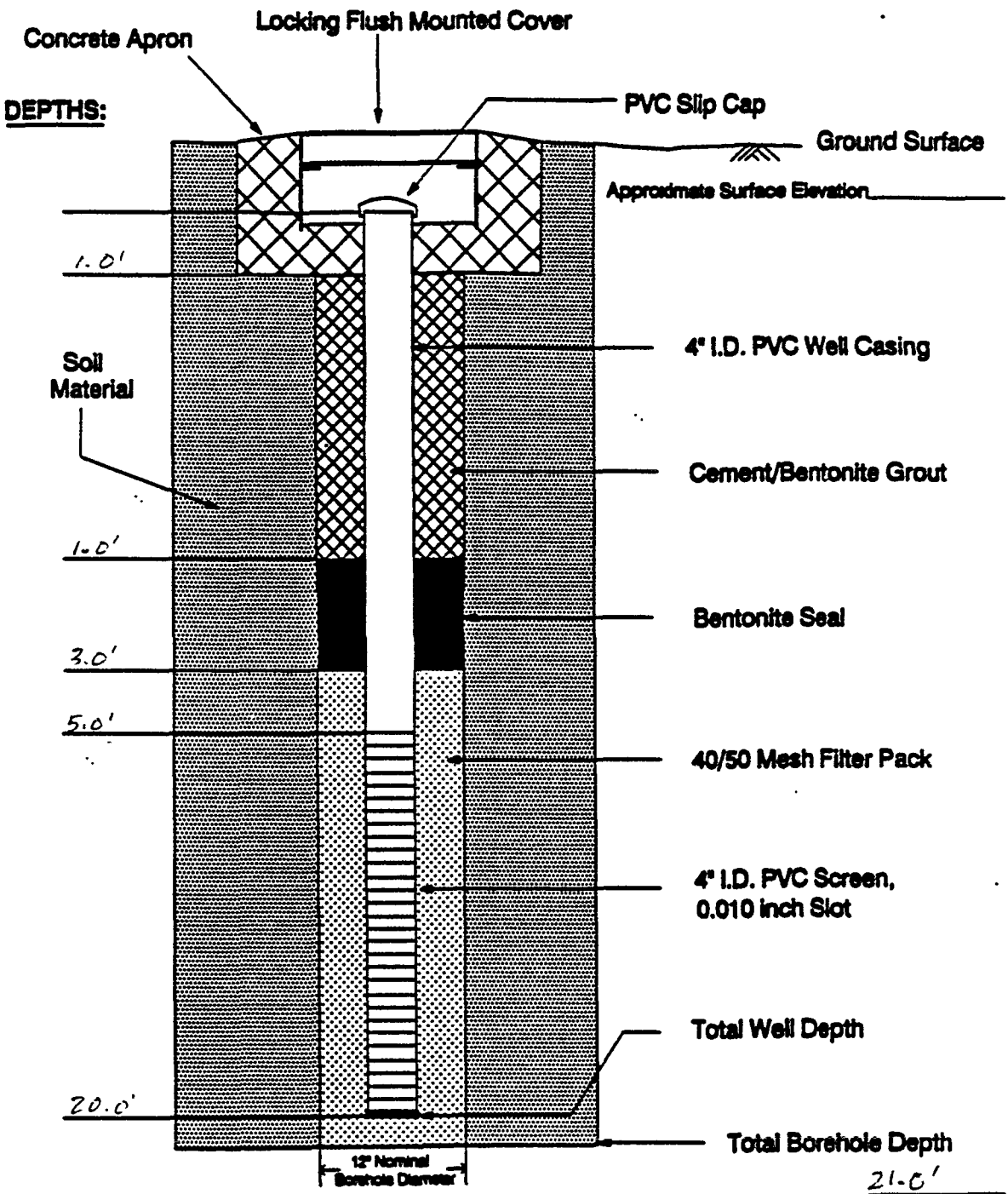

INTERNATIONAL TECHNOLOGY CORPORATION

(Not To Scale)

FIELD LOG OF BORING NS2-MW11

PROJECT NUMBER: 409767	PROJECT NAME: NAVSTA	SHEET 1 OF 2
ENGINEER/GEOLOGIST: Y. Lu	COORDINATES: NM	
GROUND SURF. ELEV.: NM	GWL Depth 10.0' Date/Time 0930	DATE STARTED: 02/07/91
TOP OF CASING ELEV.: NM	GWL Depth Date/Time	DATE COMPLETED: 02/07/91

DEPTH, FT.	BLOWS/FOOT	SAMPLE TYPE AND NO.	USCS	MEASURED CONSISTENCY TSF	RECOVERY %	RINGS SAVED/ OVA READINGS ppm	WELL CASING	WELL BACKFILL	Consistency/Color/Minor Material/Major Material/Moisture/Additional Descript.
									- Well was drilled w/ 6" (OD) HSA to GW and reamed w/ 10" (OD) HSA to well depth. - GW measured from ground surface using a depth sounder.
		NS2-MW11-S01-5	Sm		80	0	4" SCH40 Blank PVC	Concrete	Dense, yel brn (10YR 5/4) silty SAND, moist; fine grained sand, abundant mica, some shell fragments. Stain spots found.
			Sm					Seal	Same as above, color changes to dk gray (10YR 4/1). No stain spots found. 3.0'
5			Sm		15	0			Same as above, poor sample recovery, est from soil cuttings.
		MW11-S02-10	ml				4" SCH40 PVC with 0.010" Slot Screen		▼ GW first encountered @ ~ 9'. Stiff, dk gray (10YR 4/1) clayey SILT, saturated.
10					15	0			11.0'
		MW11-S03-15	Sp					Monterey Sand	Dense, dk gray (10YR 4/1) coarse SAND, saturated; some silt, abundant shells.
								#0/30 Lonestar	Same as above, est from cuttings. TOD = 21.0'
15									
20							CAP		

FIELD LOG OF BORING NS4-BH2

PROJECT NUMBER: 409767-05-33	PROJECT NAME: NAVAL STATION, SAN DIEGO	SHEET 1 OF 1
ENGINEER/GEOLOGIST: K. KAZMERSKI	COORDINATES:	
GROUND SURF. ELEV.:	GWL Depth 15.0' Date/Time 1-24-91	DATE STARTED: 1-24-91
TOP OF CASING ELEV.:	GWL Depth Date/Time	DATE COMPLETED: 1-24-91

DEPTH, FT.	PRESSURE ~~BLOWS/FOOT~~ PSI	SAMPLE TYPE AND NO.	USCS	MEASURED CONSISTENCY TSF	RECOVERY %	RINGS SAVED/ ~~GVA READINGS~~ HNU PPM	WELL CASING	WELL BACKFILL	Consistency/Color/Minor Material/Major Material/Moisture/Additional Descript.
									ABANDON BORE HOLE WITH CEMENT/GROUNT TO SURFACE
									CONCRETE WITH REBAR (8 IN)
	500		SM-SC	80	80	0			• LOOSE TO STIFF, LIGHT YELLOWISH BROWN TO LIGHT OLIVE BROWN (2.5 YR 6/3 - 5/4) FINE SILTY SAND TO CLAYEY SAND (SM-SC) WITH GRAVEL, PORCELAIN CHIPS (.25 IN TO 3.0 IN)
		S01 X S03 X	SC						• LOOSE TO STIFF, DARK BROWN (10YR 3/3) CLAYEY SAND (SC), MOIST WITH BLACK MOTTLED STREAKS, GRAVEL
5	750		CL			0			• LOOSE TO VERY STIFF, DARK BROWN TO YELLOWISH BROWN, SANDY CLAY, MOIST WITH GRAVEL (2") (CL)
									REFUSAL AT 7.5 ft (IRON PIPE SCRAP); USE DOWN HOLE HAMMER. NO CORE TO 10'.
10	500		CL-CH		100	0			• MEDIUM STIFF TO STIFF, LIGHT YELLOWISH BROWN SANDY CLAY (CL-CH) WITH MOTTLED BLACK STREAKING
			CL-CH						— SAME AS ABOVE —
15.0 ▽		S02 X X	CH						STIFF, BROWN, SANDY CLAY (CH) WITH INCREASING BLACK STREAKING
15									
									TD = 15 ft
20									

FIGURE C-3

NS2-MW11

MONITORING WELL CONSTRUCTION LOG

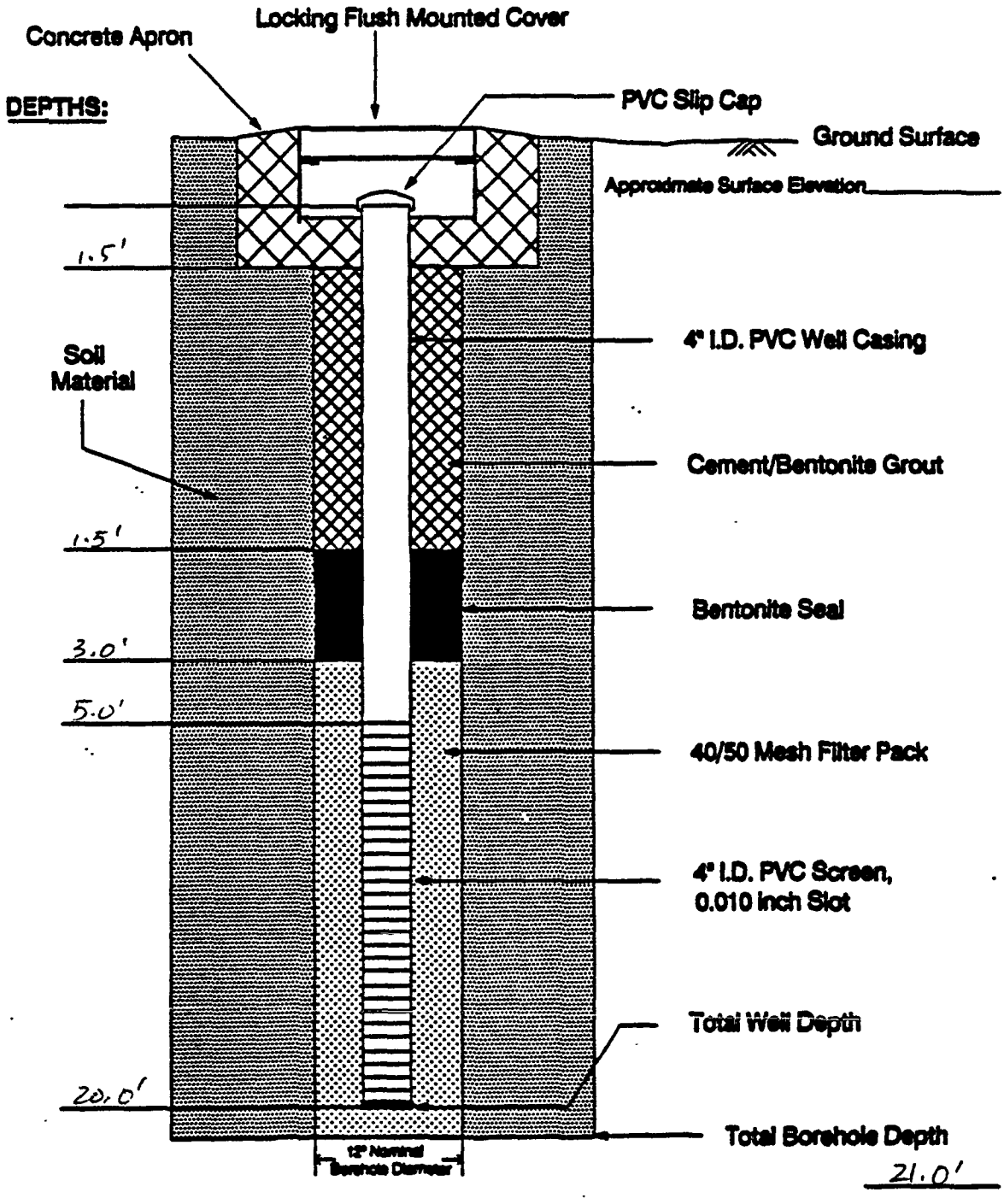

FIELD LOG OF BORING NS2-MW12

PROJECT NUMBER: 409767	PROJECT NAME: NAVSTA	SHEET 1 OF 2
ENGINEER/GEOLOGIST: Y Lu	COORDINATES: N/A	
GROUND SURF. ELEV.: N/A	GWL Depth 10-10' Date/Time 1345	DATE STARTED: 02/07/91
TOP OF CASING ELEV.: N/A	GWL Depth Date/Time	DATE COMPLETED: 02/07/91

Consistency/Color/Minor Material/Major Material/Moisture/Additional Descript.
- Borehole drilled w/ 6" (OD) HSA to , then reamed w/ 10" (OD) HSA to .
- GW measured from ground surface using a depth sounder.

DEPTH, FT.	BLOWS/FOOT	SAMPLE TYPE AND NO.	USCS	MEASURED CONSISTENCY TSF	RECOVERY %	RINGS SAVED/ OVA READINGS ppm	WELL CASING	WELL BACKFILL	Consistency/Color/Minor Material/Major Material/Moisture/Additional Descript.
					~~95~~	~~0~~	4" SCH 40 Blank PVC	Concrete	6" ASPHALT
		MW12-S01-5	GW					Seal	Backfilled pebbles to 3~5 cm in diameter, angular to subangular. Some concrete debries and course grained sand. ≈ 5'
			SP						Dense, lt bra gray (10YR 6/2). ~~Sandy GRAVEL, moist~~. SAND, moist; fine grained sand, abundant shells. Thin laminations found.
5					60	0			
		MW12-S02-10	SP						Same as above, olive (5Y4/3) in color, less shells.
			SP						Same as above. Thin lamination found.
10		MW12-S03-15	SW		40	0	4" SCH 40 PVC with 0.010" slot Screen	Lonestar Monterey Sand #0/30	∇ GW first encountered @ ~10'
									Dense, dk gray (5Y4/1) SAND, saturated; fine to med grained, occasionally embedded w/ silty sand.
15									Same as above, est. from cuttings.
									TOD = 21.0'
20							4" SCH 40 PVC CAP		21.0'

FIGURE C-3

NS2-MW12

MONITORING WELL CONSTRUCTION LOG

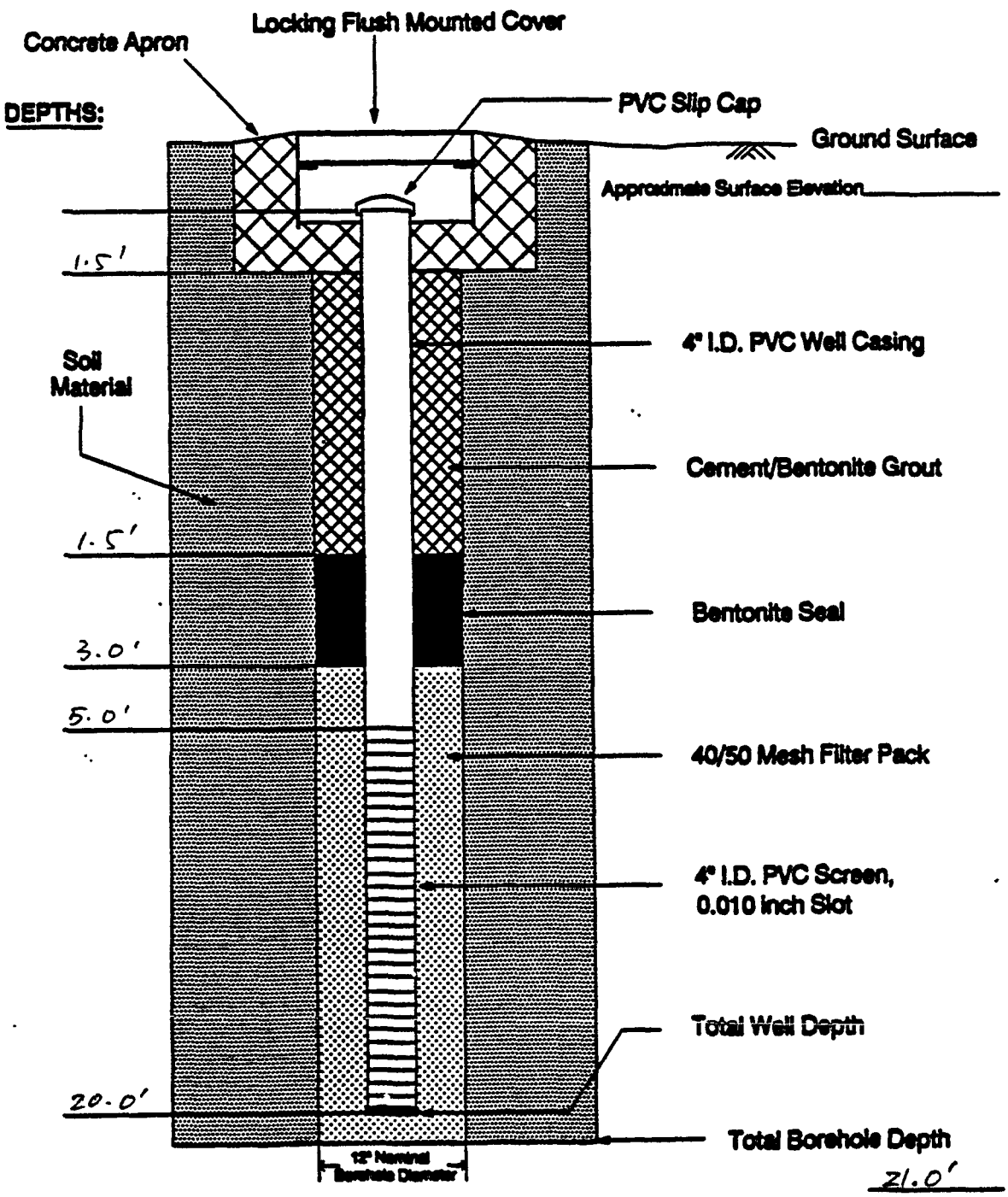

FIELD LOG OF BORING NS4-BH2

PROJECT NUMBER: 409767-05-33	PROJECT NAME: NAVAL STATION, SAN DIEGO		SHEET 1 OF 1
ENGINEER/GEOLOGIST: K. KAZMERSKI	COORDINATES:		
GROUND SURF. ELEV.:	GWL Depth 15.0' Date/Time 1-24-91	DATE STARTED: 1-24-91	
TOP OF CASING ELEV.:	GWL Depth Date/Time	DATE COMPLETED: 1-24-91	

DEPTH, FT.	PRESSURE BLOWS/FOOT PSI	SAMPLE TYPE AND NO.	USCS	MEASURED CONSISTENCY TSF	RECOVERY %	RINGS SAVED/ GVA READINGS	HNU PPM WELL CASING	WELL BACKFILL	Consistency/Color/Minor Material/Major Material/Moisture/Additional Descript.
									ABANDON BOREHOLE WITH CEMENT/GROUNT TO SURFACE
									CONCRETE WITH REBAR (8 IN)
	500		SM-SC	80	80	0			• LOOSE TO STIFF, LIGHT YELLOWISH BROWN TO LIGHT OLIVE BROWN (2.5 YR 6/3 - 5/4) FINE SILTY SAND TO CLAYEY SAND (SM-SC) WITH GRAVEL, PORCELAIN CHIPS (.25 IN TO 3.0 IN)
		S01 S03	SC						• LOOSE TO STIFF, DARK BROWN (10YR 3/3) CLAYEY SAND (SC), MOIST WITH BLACK MOTTLED STREAKS, GRAVEL
5	150		CL			0			• LOOSE TO VERY STIFF, DARK BROWN TO YELLOWISH BROWN, SANDY CLAY, MOIST WITH GRAVEL (2") (CL)
									REFUSAL AT 7.5 ft (IRON PIPE SCRAP); USE DOWN HOLE HAMMER, NO CORE TO 10'.
10	500		CL-CH		100	0			• MEDIUM STIFF TO STIFF, LIGHT YELLOWISH BROWN SANDY CLAY (CL-CH) WITH MOTTLED BLACK STREAKING
			CL-CH						— SAME AS ABOVE —
15.0 ▽ 15		S02	CH						STIFF, BROWN, SANDY CLAY (CH) WITH INCREASING BLACK STREAKING
									TD = 15 ft
20									

FIELD LOG OF BORING NS4-B43

PROJECT NUMBER: 409767-04-33	PROJECT NAME: NAVAL STATION, SAN DIEGO		SHEET 1 OF 1
ENGINEER/GEOLOGIST: K. KAZMERSKI	COORDINATES:		
GROUND SURF. ELEV.:	GWL Depth — Date/Time —	DATE STARTED: 1-25-91	
TOP OF CASING ELEV.:	GWL Depth — Date/Time —	DATE COMPLETED: 1-25-91	

DEPTH, FT.	BLOWS/FOOT	SAMPLE TYPE AND NO.	USCS	MEASURED CONSISTENCY TSF	RECOVERY %	RINGS SAVED/ ~~OVA~~ HNU READINGS	WELL CASING	WELL BACKFILL	Consistency/Color/Minor Material/Major Material/Moisture/Additional Descript.
									- GROUND WATER NOT ENCOUNTERED - ABANDON BORE HOLE WITH CEMENT/GROUT MIXTURE TO SURFACE
			SM		65	0			LOOSE, YELLOWISH BROWN, SILTY SAND WITH GRAVEL, COBBLE >6 IN. MUST REMOVE MANUALLY. ASPHALT SECTION (6 IN) 1.5 ft BELOW GRADE.
		S01 X	SM						LOOSE, OLIVE BROWN (2.5YR 4/3) FINE SILTY SAND, MOIST WITH SHELLS, GRAVEL
5			SM		60	0			LOOSE, YELLOW (2.5 YR 6/6) FINE SILTY SAND, MOIST WITH SHELLS, GRAVEL &
									- SAME AS ABOVE -
		S02 X	CL						~~YELLOW~~ LOOSE, YELLOW, FINE TO MEDIUM SAND (SP) MOIST WITH DARK GRAY CLAY LENSES .25 IN. TO 1 IN., SHELLS
10									REFUSAL ON SECOND MOVE OVER AT SAME DEPTH OF 9.0 FT.
									TD = 9 ft
15									
20									

FIELD LOG OF BORING NS4-BH1

PROJECT NUMBER: 409767-04-33	PROJECT NAME: NAVAL STATION, SAN DIEGO		SHEET 1 OF 1
ENGINEER/GEOLOGIST: K. KAZMERSKI	COORDINATES:		
GROUND SURF. ELEV.:	GWL Depth 17.6' Date/Time 1-24-91	DATE STARTED: 1-24-91	
TOP OF CASING ELEV.:	GWL Depth Date/Time	DATE COMPLETED: 1-24-91	

ABANDON BOREHOLE WITH CEMENT/GROUT TO SURFACE

DEPTH, FT.	PRESSURE ~~BLOWS/FOOT~~ PSI	SAMPLE TYPE AND NO.	USCS	MEASURED CONSISTENCY TSF	RECOVERY %	RINGS SAVED/ ~~OVA~~ HNU READINGS	WELL CASING	WELL BACKFILL	Consistency/Color/Minor Material/Major Material/Moisture/Additional Descript.
	250 TO 500		SM-SC		70		0		ASPHALT 6IN OVER LOOSE, OLIVE (2.5Y 5/4) SILTY SAND TO CLAYEY SAND, DRY TO MOIST (SM-SC)
		S01 X	CL-SM						MEDIUM STIFF, BROWN (10YR 5/3) SANDY CLAY, MOIST WITH ASPHALT CHIPS (.25" TO 3") WITH DISCOLORATION IN SOIL AROUND CHIPS (CL-SM)
5	500		SM-SC		45		0		LOOSE, OLIVE BROWN (2.5YR 4/6) SILTY SAND (SM) TO A CLAYEY SAND (SC), MICACEOUS
		S02 X	SC-CL						LOOSE TO MEDIUM DENSE, DARK RED, CLAYEY SAND TO SANDY CLAY (SC-CL), SHELLS, CONCRETE CHIPS, TILE CHIPS
10	500 TO 750		CH		100		0		MEDIUM STIFF TO VERY STIFF, BROWN (7.5YR 5/3) TO DARK BROWN (7.5YR 3/3), FAT CLAY (CH)
									— SAME AS ABOVE —
15			CH		95		0		STIFF TO VERY STIFF BROWN TO DARK BROWN SANDY CLAY (CH) MOTTLED WITH BLACK STREAKS
17.6' ▽									— SAME AS ABOVE —
			CL						MEDIUM STIFF, LIGHT YELLOWISH BROWN (2.5YR 6/3) SANDY CLAY (CL)
20									TD = 20 FT

FIELD LOG OF BORING NS4-BH4

PROJECT NUMBER: 409767	PROJECT NAME: NAVAL STATION		SHEET 1 OF 1
ENGINEER/GEOLOGIST: K. KAZMERSKI	COORDINATES:		
GROUND SURF. ELEV.:	GWL Depth 13.0 ft Date/Time 1-25-91	DATE STARTED: 1-25-91	
TOP OF CASING ELEV.:	GWL Depth Date/Time	DATE COMPLETED: 1-25-91	

ABANDON BOREHOLE WITH CEMENT/GROUT MIXTURE TO SURFACE

DEPTH, FT.	~~PRESSURE BLOWS/FOOT PSI~~	SAMPLE TYPE AND NO.	USCS	~~MEASURED CONSISTENCY TSF~~	RECOVERY %	~~RINGS SAVED/ OVA READINGS HNU IN PPM~~	~~WELL CASING~~	WELL BACKFILL	Consistency/Color/Minor Material/Major Material/Moisture/Additional Descript.
	500		SM		75	0			LOOSE, REDDISH BROWN (2.5YR 4/3) SILTY SAND (SM) FILL
			ML						LOOSE, DARK BROWN (10YR 3/3) SILT (ML) FILL
		S01	ML-CL						LOOSE, PALE BROWN (10YR 6/3) SILT TO SILTY SAND, DRY WITH SHELLSAND DARK GRAY CLAYEY SAND LENSES .25 IN TO 1 IN. (ML-CL)
			ML-CL						- SAME AS ABOVE -
5	500		SM		60	0			LOOSE, GRAYISH BROWN (2.5Y 5/2) SILT TO SILTY SAND WITH SHELLS AND CLAY LENSES .25 IN TO 2 IN
			SM						- SAME AS ABOVE -
10	500		SM		95				- SAME AS ABOVE -
			OH						SOFT TO MEDIUM STIFF, BLUE-GRAY-GREEN, ORGANIC CLAY WITH MINOR FIBER MATERIAL (ROOTS) (OH), MICA, WITH STRONG ODOR, UNIFORM
13.0						16			
			OH			90 9			- SAME AS ABOVE
15	500	S02			100	31			MEDIUM STIFF BLUE-GRAY-GREEN, ORGANIC CLAY WITH BLACK STREAKING AND MINOR FIBER (OH), MICA, WITH STRON ODOR, UNIFORM
20									- SAME AS ABOVE - TD = 20 ft

FIELD LOG OF BORING NS4-BH5-

PROJECT NUMBER: 409767-04-33	PROJECT NAME: NAVSTA, SAN DIEGO		SHEET 1 OF 1
ENGINEER/GEOLOGIST: K. KAZMERSKI	COORDINATES:		
GROUND SURF. ELEV.:	GWL Depth 12 FT Date/Time 905/1-29	DATE STARTED: 1-29-94	
TOP OF CASING ELEV.:	GWL Depth Date/Time	DATE COMPLETED: 1-29-94	

DEPTH, FT.	~~PRESSURE BLOWS/FOOT~~	SAMPLE TYPE AND NO.	USCS	MEASURED CONSISTENCY TSF	RECOVERY %	RINGS SAVED/ ~~OVA~~ HNU READINGS	WELL CASING	WELL BACKFILL	Consistency/Color/Minor Material/Major Material/Moisture/Additional Descript.
									- ABANDON BORE HOLE WITH CEMENT / GROUT TO SURFACE
	250		CL		90	0			HARD, DARK BROWN (7.5YR 4/4) CLAY, DRY TO MOIST CL, CALCARIOUS
									LOOSE, LIGHT BROWN (7.5YR 6/5) FINE SILTY SAND (SM) MOIST, WITH SHELLS
									- SAME AS ABOVE -
5	280		SM		100	0			LOOSE, LIGHT BROWNISH YELLOW (2.5Y 6/3), FINE, SILTY SAND (SM), GRADING TO A MEDIUM DENSE, DARK GRAY (5Y 4/1) FINE SILTY SAND (SM) GRADING TO A MEDIUM STIFF, VERY DARK GRAY (5Y 3/1), FAT CLAY (CH), MOIST, MICA FLAKES, TO A SANDY CLAY (CL)
			SM CH - CL						
									- SAME AS ABOVE - WITH INCREASING MICA
10	210	S01 X			95				- SAME AS ABOVE (UNIFORM) WITH THIN LENSES OF BLACK CLAY WITH HYDRO CARBON ODOR FROM 9.5' TO 10.0.
12.0 ft ▽		S02 X	CH			3 4			MEDIUM STIFF, VERY DARK GRAY (5Y 3/1), CLAY MOIST TO WET, (CH) WITH INCREASING SHELL CONTENT
			SC			3 2 1			LOOSE TO MEDIUM STIFF, DARK GRAY (5Y 4/1) CLAYEY SAND WET (SC) WITH ABUNDANT SHELLS
15			CH			0			VERY STIFF, DARK BROWN (7.5YR 4/2) CLAY
									TD = 15 FT
20									

FIELD LOG OF BORING NS4-BH6

PROJECT NUMBER: 409767-04-033	PROJECT NAME: NAVSTA, SAN DIEGO		SHEET 1 OF 1
ENGINEER/GEOLOGIST: K. KAZMERSKI	COORDINATES:		
GROUND SURF. ELEV.:	GWL Depth	Date/Time	DATE STARTED: 1-28-91
TOP OF CASING ELEV.:	GWL Depth	Date/Time	DATE COMPLETED: 1-28-91

DEPTH, FT.	~~PRESSURE BLOWS/FOOT, PSI~~	SAMPLE TYPE AND NO.	USCS	MEASURED CONSISTENCY TSF	RECOVERY %	RINGS SAVED/ ~~OVA READINGS~~	~~HAUL~~ WELL CASING	WELL BACKFILL	Consistency/Color/Minor Material/Major Material/Moisture/Additional Descript.
									- STANDING WATER IN BOREHOLE NOT ENCOUNTERED BUT FROM CORE SAMPLES INDICATION IS 10-12 FT. - ABANDON BOREHOLE WITH CEMENT/GROUT MIXTURE TO SURFACE
	500		SM		DIG OUT 100	0			ASPHALT (.50 IN) OVER, LOOSE, DARK YELLOWISH BROWN (10YR 3/4) SILTY SAND (SM) MOIST WITH CONCRETE AND ASPHALT CHIPS
									— SAME AS ABOVE —
		S01 X	CL						STIFF, DARK BROWN (7.5YR 3/3) SANDY CLAY MOIST (8")
			SM						LOOSE, LIGHT YELLOWISH BROWN (2.5Y 6/4), SILTY SAND, MOIST WITH SHELLS
5			SM						LOOSE, LIGHT BROWNISH GRAY (10YR 6/2), SILTY SAND, MOIST WITH STRATIFIED SHELL BEDS.
	500				65	0			
			SM						LOOSE OLIVE BROWN (2.5Y 4/3) SILTY SAND WITH ABUNDANT WOOD CHIPS (SM)
		S02 X	CL						SOFT TO MEDIUM STIFF, DARK GRAY (5Y 4/1), SANDY CLAY (MOIST (CL), MOIST MICA
			SP						LOOSE VERY PALE BROWN (10YR 7/3) FINE TO MEDIUM SAND (SP) WITH ABUNDANT SHELLS
10									
	250		SC		100				LOOSE, DARK GRAY CLAYEY SAND (SC) GRADING TO A MEDIUM STIFF, DARK GRAY, ORGANIC CLAY, WET, ABUNDANT SHELLS (whole) UNBROKEN, VERY STRONG ODOR
W.L.			OH			15			
		S03 X				25			
						20			
15									— SAME AS ABOVE —
									TD = 15 FT

FIELD LOG OF BORING NS4-BH-7

PROJECT NUMBER: 409767	PROJECT NAME: NAVSTA, SAN DIEGO	SHEET 1 OF 1
ENGINEER/GEOLOGIST: K. KAZMERSKI	COORDINATES:	
GROUND SURF. ELEV.:	GWL Depth Date/Time	DATE STARTED: 1-28-91
TOP OF CASING ELEV.:	GWL Depth Date/Time	DATE COMPLETED: 1-28-91

DEPTH, FT.	~~PRESSURE BLOWS/FOOT~~	SAMPLE TYPE AND NO.	USCS	MEASURED CONSISTENCY TSF	RECOVERY %	RINGS SAVED/ ~~OVA~~ READINGS	~~AND~~ WELL CASING	WELL BACKFILL	Consistency/Color/Minor Material/Major Material/Moisture/Additional Descript.
									- GROUND WATER NOT ENCOUNTERED IN BOREHOLE; FROM CORE SAMPLE W.L. IS INDICATED FROM 10' TO 12' B.G. - ABANDONED WELL WITH CEMENT/GROUT MIXTURE TO SURFACE
			ML-SM		15				LOOSE TO MEDIUM DENSE, DARK BROWN (10YR 3/2) SILT TO SILTY SAND (ML-SM) WITH CONCRETE AND ASPHALT CHIPS TO 1.5 FT DRILLING DIFFICULTY THRU CONCRETE CHIPS NO CORE TO 5 FT.
5	500				60				DRILL BIT GRINDING ON CONCRETE CHIPS APPROX 2 FT PUSHING DOWN
			SP						LOOSE, GRAYISH BROWN (2.5Y 5/2) MEDIUM SAND (SP) MOIST, ABUNDANT SHELLS
		S01 X	CL-CH			16			LOOSE TO MEDIUM STIFF, VERY DARK GRAY (2.5Y/3/0), SAND CLAY TO FAT CLAY, MOIST, MICA, STRONG ODOR
10	500				80				
W.L.		S02 X	CL-OH & SP			13			MEDIUM STIFF TO STIFF, VERY DARK GRAY, SANDY CLAY TO ORGANIC CLAY WET (CL-OH) WITH MEDIUM SAND LENSE (SP) (3") ABUNDANT SHELLS, STRONG ODOR, MICA
									- SAME AS ABOVE
15									TD = 15 ft
20									

FIELD LOG OF BORING NS4-BH8

PROJECT NUMBER: 409767-4-33	PROJECT NAME: NAVSTA, SAN DIEGO	SHEET 1 OF 1
ENGINEER/GEOLOGIST: K. KARMERSKI	COORDINATES:	
GROUND SURF. ELEV.:	GWL Depth Date/Time	DATE STARTED: 1-28-91
TOP OF CASING ELEV.:	GWL Depth 8.0 ft Date/Time 1535	DATE COMPLETED: 1-28-91

DEPTH, FT.	~~BLOWS/FOOT~~ PRESSURE PSI	SAMPLE TYPE AND NO.	USCS	MEASURED CONSISTENCY TSF	RECOVERY %	RINGS SAVED/ ~~OVA~~ READINGS	~~NAV~~ WELL CASING	WELL BACKFILL	Consistency/Color/Minor Material/Major Material/Moisture/Additional Descript.
									- GWL MEASURED WITH AUGERS REMOVED FROM BOREHOLE - ABANDON BOREHOLE WITH CEMENT/GROUT MIXTURE TO SURFACE AFTER BENTONITE SEAL TO GWL
			SM		60	0			LOOSE TO MEDIUM DENSE, PALE BROWN (10YR 6/3) SILTY SAND (SM) WITH ASPHALT CHIPS AND GRAVEL, CONCRETE CHIPS
									LARGE CONCRETE CHIPS; DIFFICULT DRILLING
			CL						STIFF TO VERY STIFF, YELLOW BROWN, SANDY CLAY (CL) MOIST
		S01 X							
5	500		CL		100	7			VERY STIFF, OLIVE BROWN (2.5Y 4/3) TO DARK BROWN (10YR 3/3) SAND CLAY
									— GRADING TO —
8.0 ft			SC			20			OLIVE GRAY CLAYEY SAND, MOIST (SC) LOOSE DENSE TO MICA
									— GRADING TO —
▽			OH						MEDIUM STIFF TO STIFF, DARK OLIVE GRAY (5Y 3/2) MOIST ORGANIC CLAY (OH) WITH ROOT FIBERS, UNIFORM, STRONG ODOR
		S02 X				30			
									— SAME AS ABOVE —
10	250		OH						MEDIUM STIFF, DARK GRAY (5Y, 3/2) ORGANIC CLAY (OH) WET, ABUNDANT SHELLS, UNIFORM, STRONG ODOR
↑ WL?		S03 X				80			
						40			
						60			
15			OH						— SAME AS ABOVE —
									TD = 15 ft
20									

FIELD LOG OF BORING NS4-MW1

PROJECT NUMBER: 409767-04-33	PROJECT NAME: NAVSTA, SAN DIEGO	SHEET 1 OF 2
ENGINEER/GEOLOGIST: K. KAZMERSKI	COORDINATES:	
GROUND SURF. ELEV.:	GWL Depth 11.5' Date/Time 1345 /	DATE STARTED: 1-29-91
TOP OF CASING ELEV.:	GWL Depth Date/Time	DATE COMPLETED: 1-29-91

DEPTH, FT.	~~PRESSURE~~ ~~BLOWS/FOOT~~ PID	SAMPLE TYPE AND NO.	USCS	MEASURED CONSISTENCY TSF	RECOVERY %	RINGS SAVED/ ~~OVA~~ HNU READINGS	WELL CASING	WELL BACKFILL	Consistency/Color/Minor Material/Major Material/Moisture/Additional Descript.
									- NO INDICATION OF GW @ 20 ft WITH AUGERS IN PLACE - CONTINUE DRILLING TO 25' WITH CORE SAMPLING
	250		CL / SC		90	0			ASPHALT (10 IN) OVER GRAVEL BED (≈.25 IN) OVER A ~~LOOSE, BROWN (10YR 5/3) FINE SILTY SAND,~~ DARK YELLOWISH BROWN (10YR 4/4) SANDY CLAY (CL), MOIST, SHELLS TO CLAYEY SAND (SC), STIFF TO VERY STIFF, WITH SHELLS
									GRADING TO
5	250		SM		95	0			LOOSE TO MEDIUM DENSE, BROWN (10YR 5/3), FINE SILTY SAND, MOIST TO WET (SM) WITH SHELLS
	500	S01	CL / CH						MEDIUM STIFF TO VERY STIFF, DARK GRAYISH BROWN TO YELLOWISH BROWN (10YR 3/2 - 5/6) SANDY CLAY (CL) TO A FAT CLAY (CH), MOIST TO WET.
10	500		CH		100	0			VERY STIFF TO HARD, BROWN (10YR 5/3) CLAY (CH), MOIST, UNIFORM TO 15 FT.
11.5' ▽									
			CH						- SAME AS ABOVE -
15	500		CH		100	0			VERY STIFF, DARK BROWN (7.5YR 3/3), MOIST, CLAY (CH)
		S02	SC						MEDIUM DENSE TO DENSE, DARK BROWN (7.5YR 3/3) CLAYEY SAND, MOIST, (SC), MEDIUM GRAIN
			CH						VERY STIFF TO HARD, DARK BROWN (7.5YR 3/3) CLAY (CH) MOIST, (CH)
			SC						MEDIUM DENSE TO DENSE, DARK BROWN (7.5YR 3/3) CLAYEY SAND MOIST (SC), MEDIUM GRAIN.
			CH						HARD, DARK BROWN (7.5YR 3/3) CLAY, MOIST (CH)
20									

FIELD LOG OF BORING NS4-MW1

PROJECT NUMBER: 409767-04-33	PROJECT NAME: NAV STA, SAN	SHEET 2 OF 2
ENGINEER/GEOLOGIST: K. KALMERSEN	COORDINATES:	
GROUND SURF. ELEV.:	GWL Depth 11.5' Date/Time 1345	DATE STARTED: 1-29-91
TOP OF CASING ELEV.:	GWL Depth 11.6' Date/Time 1450	DATE COMPLETED: 1-29-91

DEPTH, FT.	~~PRESSURE BLOWS/FOOT~~	SAMPLE TYPE AND NO.	USCS	MEASURED CONSISTENCY TSF	RECOVERY %	RINGS SAVED/ ~~OVA~~ READINGS	WELL CASING	WELL BACKFILL	Consistency/Color/Minor Material/Major Material/Moisture/Additional Descript.
									- Pull 8" augers @ 25' - GW @ 11.5' - REDRILL WITH 10" AUGERS TO ≈ 23' SLOT .010 IN. - SET BOTTOM OF STEAM CLEANED PVC CASING AT 22' - BACKFILL WITH .030 SILICA SAND TO 5' BG - SURGE WELL TO SETTLE SAND PACKING AND REFILL TO 5' BG - BACKFILL WITH BENTONITE TO 3' BG - CEMENT TO WITHIN 1 FT BG
	500		CH 1 CL		100	0			STIFF TO HARD, BROWN TO DARK BROWN (10YR 5/3 - 3/3), CLAY (CH) WITH LENSES OF SANDY CLAY (CL) 3" to 6" WET, MICACEOUS
25									- SAME AS ABOVE -
									TD = 25 ft
30									
35									
40									

FIGURE C-3

NS4-MW1

MONITORING WELL CONSTRUCTION LOG

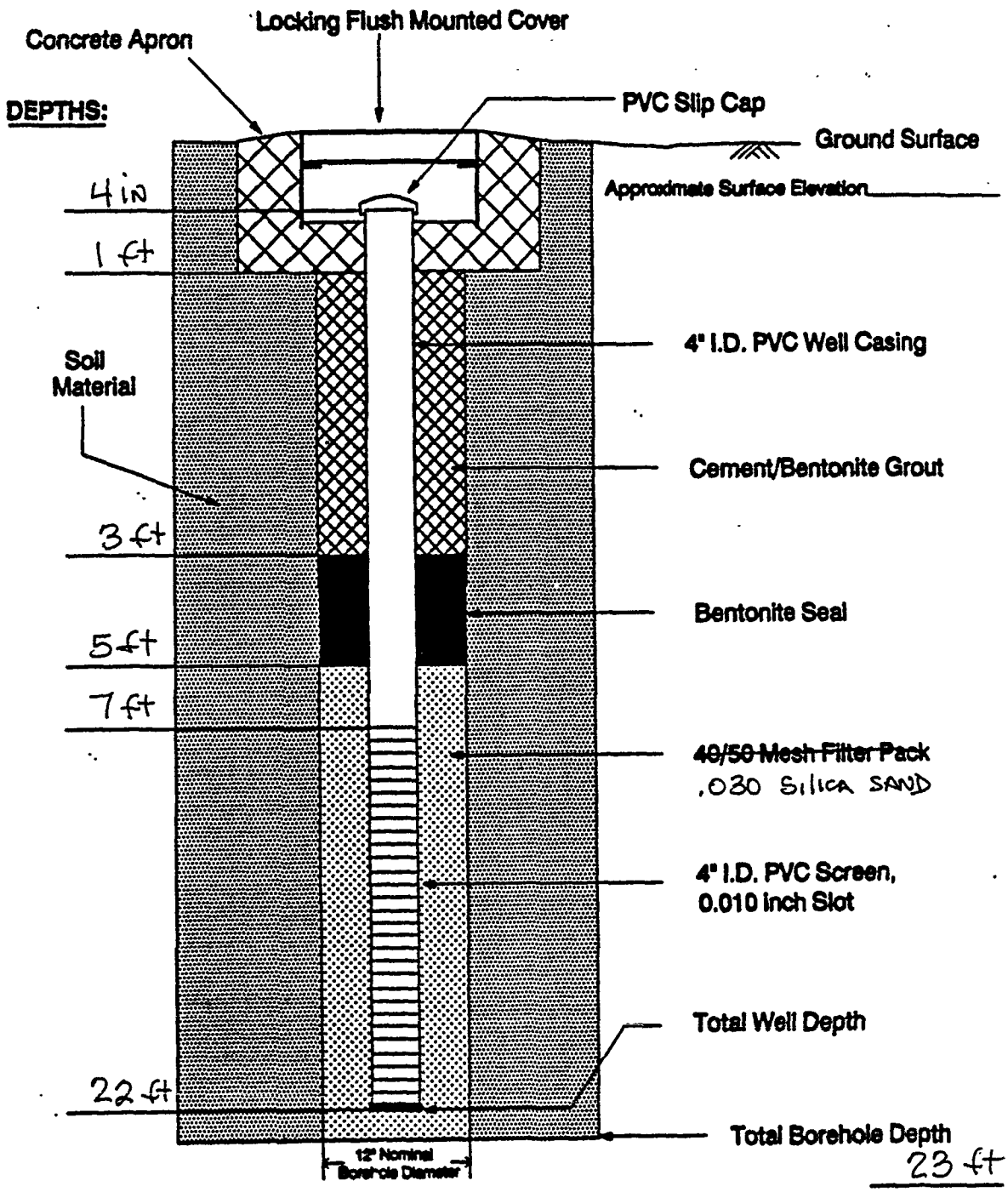

INTERNATIONAL TECHNOLOGY CORPORATION

(Not To Scale)

NS4-MW2

FIELD LOG OF BORING

SHEET 1 OF 4

PROJECT NO. 409767 PROJECT NAME NAVSTA HAZWRAP

GEOLOGIST/ENGINEER Y. Lu

PURPOSE Soil sampling and mw installation.

LOCATION NS4 - DPDO

LOCATION REFR. NOT SURVEYED

METHOD OF LOCATING NOT SURVEYED

ELEV. REFR. NOT SURVEYED

HOW MEASURED ELEV. AT BORING NOT MEASURED

SITE CONDITIONS AT BORING The site was clean and proper for the drilling work

WEATHER CONDITIONS Sunny and breezy.

DRILLING CO. Drillline Co. DRILLER Joe

TYPE OF DRILL RIG CME 61 TYPE OF DRILLING Hollow Stem Auger

DIA. OF BORING (In.) 10 HAMMER WT. (lb.) 240 DROP (In.) 30

CASING 4" SCH40 PVC SLOT SIZE 0.010" BACKFILL N/A

DRILLING MUD N/A

HOW GROUNDWATER DEPTH MEASURED GW measured from ground surface using a water meter.

DECONTAMINATION PROCEDURES Steam clean augers. Sampler was triple rinsed w/ deion water

BORING COND. AT COMPLETION A metal well casing was mounted to protect well cap.

NOTES

LOCATION SKETCH

FIELD LOG OF BORING VS4 - MW2

PROJECT NUMBER: 409707	PROJECT NAME: NAVSTA HAZWRAP	SHEET 2 OF 4
ENGINEER/GEOLOGIST: Y. Lu	COORDINATES: Nm	
GROUND SURF. ELEV.: Nm	GWL Depth 17.70' Date/Time 1100	DATE STARTED: 1/28/91
TOP OF CASING ELEV.: Nm	GWL Depth 9.70 Date/Time 1400	DATE COMPLETED: 1/28/91

Consistency/Color/Minor Material/Major Material/Moisture/Additional Descript.

GW measured from ground surface. (Water level changes greatly due to tidal effect).

Air monitoring background = 0 ppm.

DEPTH, FT.	BLOWS/FOOT	SAMPLE TYPE AND NO.	USCS	MEASURED CONSISTENCY TSF	RECOVERY %	RINGS SAVED/ ~~OVA~~ HNu READINGS ppm	WELL CASING	WELL BACKFILL	Consistency/Color/Minor Material/Major Material/Moisture/Additional Descript.
			af ~~SP~~		60	30	4" SCH40 Blank PVC	Concrete	Loose, yel brn (10YR 5/6) SAND, dry; med to coarse grained sand, w/ gravels to 3 cm in diameter. (Backfilled materials). Concrete debries found in the Top 3 feet 7.5'
		MW-S01	~~SP~~ Sm					Grout	Loose yel brn (10YR 5/6) silty SAND, ~~dry~~ moist; fine ~~to med~~ grained sand. abundant shells. Occasionally some coarse sand. Thin lamination found. 0930, air monitor: 100 ppm. (Fuel emission effect).
5					50	30			Same as above w/ increase in silt ~~and clay~~ contents. 6.0'
			SP						Dense. brn (10YR 5/3) SAND, wet: fine to med grained sand. abundant shells. 0940 air monitor: 0 ppm 1020 " "
10		MW2-S02	cl		100	30		Seal	Very stiff, blk (10YR 2/1) silty CLAY, wet; upper 2' have abundant plant roots.
									Same as above, with increase in siltgts.
							4" SCH40 PVC, 0.010" slot	Cone star sand	Same as above, occasionally some med. sand lens. Abundant complete shells ~~and nails~~.
15		MW2-S03			80	5			Same as above. clay beds embeded w/ sand lens.
									▽ GW first encounted @ ~18'.
20			cl					ø 0/30	Very stiff. v. dk brn (10YR 2/2) silty CLAY, moist; some lt gry caliches (could be gypsum or salt, too). 19.0

TOD = 29.0', PVC btm. 28.0' ~~Sand pk top [illegible]~~

FIELD LOG OF BORING NS4-MW2

PROJECT NUMBER: 409767	PROJECT NAME: NAVSTA		SHEET 3 OF 4
ENGINEER/GEOLOGIST: Y Lu	COORDINATES: NM		
GROUND SURF. ELEV.: NM	GWL Depth 17.70 Date/Time 1100		DATE STARTED: 1/28/91
TOP OF CASING ELEV.: NM	GWL Depth 9.70 Date/Time 1600		DATE COMPLETED: 1/28/91

DEPTH, FT.	BLOWS/FOOT	SAMPLE TYPE AND NO.	USCS	MEASURED CONSISTENCY TSF	RECOVERY	RINGS SAVED/ OVA READINGS	WELL CASING	WELL BACKFILL	Consistency/Color/Minor Material/Major Material/Moisture/Additional Descript.
							4" SCH 40 PVC, 0.010" slot	#0/30 Lonestar Sand	Same as previous page (No sample recovery estimated from soil cuttings)
25									
							CAP		TOP = 29.0'
30									

9 20 25 C5

FIGURE C-3

NSC-MW2

MONITORING WELL CONSTRUCTION LOG

NS4 - MW2

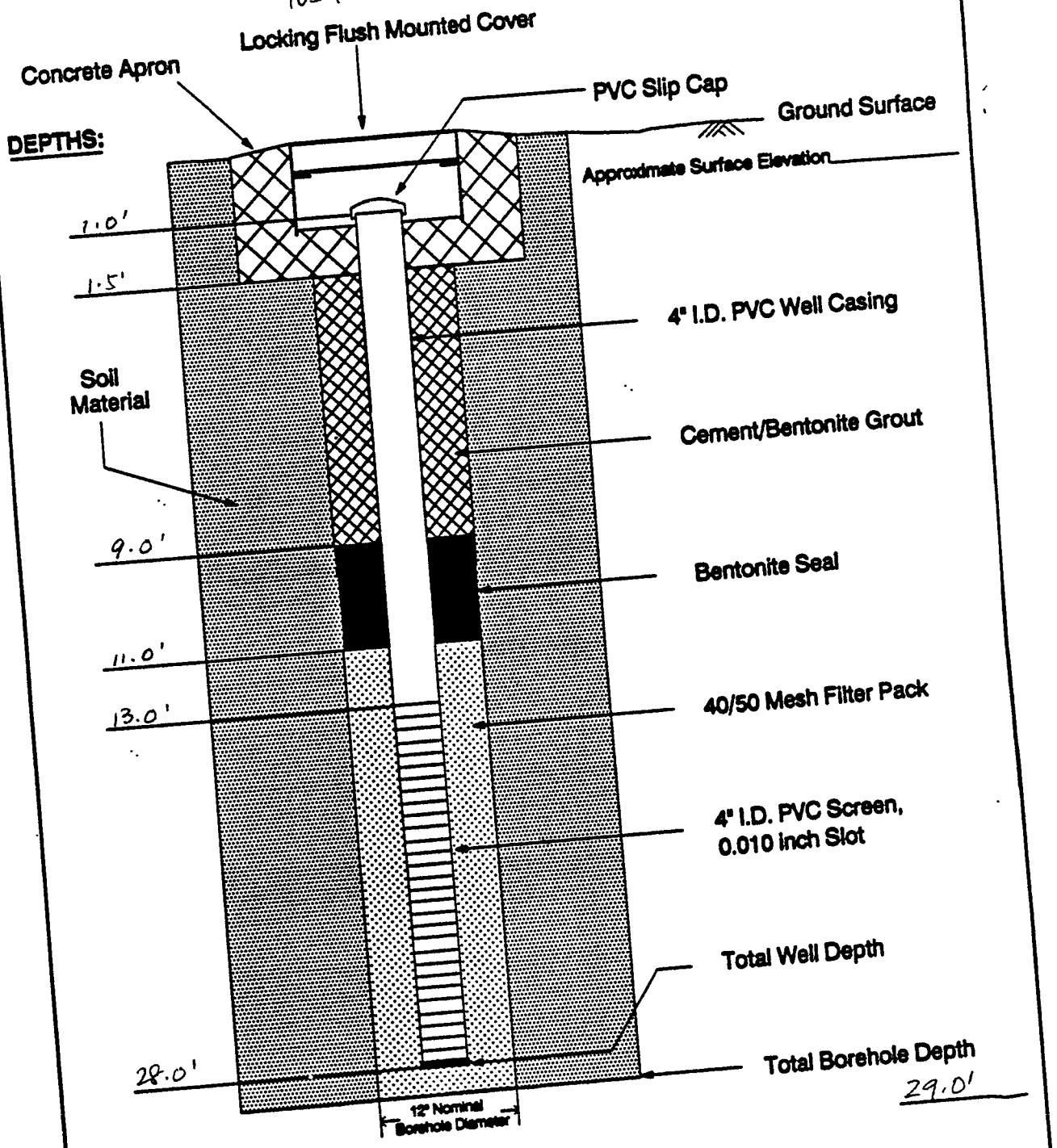

(Not To Scale)

INTERNATIONAL TECHNOLOGY CORPORATION

NS4 - MW3

FIELD LOG OF BORING

SHEET 1 OF 3

PROJECT NO. 409767 PROJECT NAME NAVSTA HAZWRAP

GEOLOGIST/ENGINEER Y. Lu

PURPOSE Soil sampling and MW installation

LOCATION NS4 - DPDO

LOCATION REFR. NOT SURVEYED

METHOD OF LOCATING NOT SURVEYED

ELEV. REFR. NOT SURVEYED

HOW MEASURED ELEV. AT BORING NOT MEASURED

SITE CONDITIONS AT BORING The site was clean and proper for the drilling work

WEATHER CONDITIONS Sunny and breezy

DRILLING CO. Drillline Co. DRILLER Joe

TYPE OF DRILL RIG CME 61 TYPE OF DRILLING Hollow Stem Auger

DIA. OF BORING (In.) 10 HAMMER WT. (lb.) 240 DROP (In.) 30

CASING 4" SCH 40 PVC SLOT SIZE 0.010" BACKFILL N/A

DRILLING MUD N/A

HOW GROUNDWATER DEPTH MEASURED GW measured from ground surface using a water meter

DECONTAMINATION PROCEDURES Steam clean augers. Sampler was triple rinsed w/ deion water.

BORING COND. AT COMPLETION A metal casing was mounted to protect well cap.

NOTES

LOCATION SKETCH

FIELD LOG OF BORING NS4-MW3

PROJECT NUMBER: 409767	PROJECT NAME: NAVSTA HAZWRAP	SHEET 2 OF 3
ENGINEER/GEOLOGIST: Y Lu	COORDINATES: NM	
GROUND SURF. ELEV.: NM	GWL Depth 6.90' Date/Time 1600	DATE STARTED: 1/28/91
TOP OF CASING ELEV.: NM	GWL Depth Date/Time	DATE COMPLETED: 1/28/91

DEPTH, FT.	BLOWS/FOOT	SAMPLE TYPE AND NO.	USCS	MEASURED CONSISTENCY TSF	RECOVERY %	RINGS SAVED/ ~~OVA~~ ppm READINGS	WELL CASING	WELL BACKFILL	Consistency/Color/Minor Material/Major Material/Moisture/Additional Descript.
									GW measured from ground surface Air monitor background 0ppm
		MW2-S01	of		30	0	Blank PVC	Concrete	Loose, dk yel brn (10YR4/4) SAND, ~~dry~~ moist; coarse sand, w/ abundant concrete debris (Backfilled materials) 1.5' Air monitor = 2ppm
			sp						Dense, dk yel brn (10YR4/4) SAND, ~~wet~~ moist; med grained sand. (No sample recovery, estimated from soil cuttings). Some shells.
5		MW2-S02	sp		30	0			Same as above. ~~Saturated~~ coarse grained, w/ some gravels to 3 cm in diameter. Saturated.
			ml						Very stiff blk (10YR2/1) SILT, ~~sat~~ wet;
			ml sp ml sp						Same as above SILT embedded w/ coarse SAND. (poor sample recovery, estimated from soil cuttings). GW first encountered @ ~8
10							4" SCH40 PVC 0.010" slot	# 0/30 Lonestar Sand	Air monitor = 2 ppm TOD = 18.0'
15							CAP		Note - Due to tidal effect. GW level is ~~[illegible]~~ very high in the site"
20									

FIGURE C-3

MONITORING WELL CONSTRUCTION LOG

NS4 - mw3

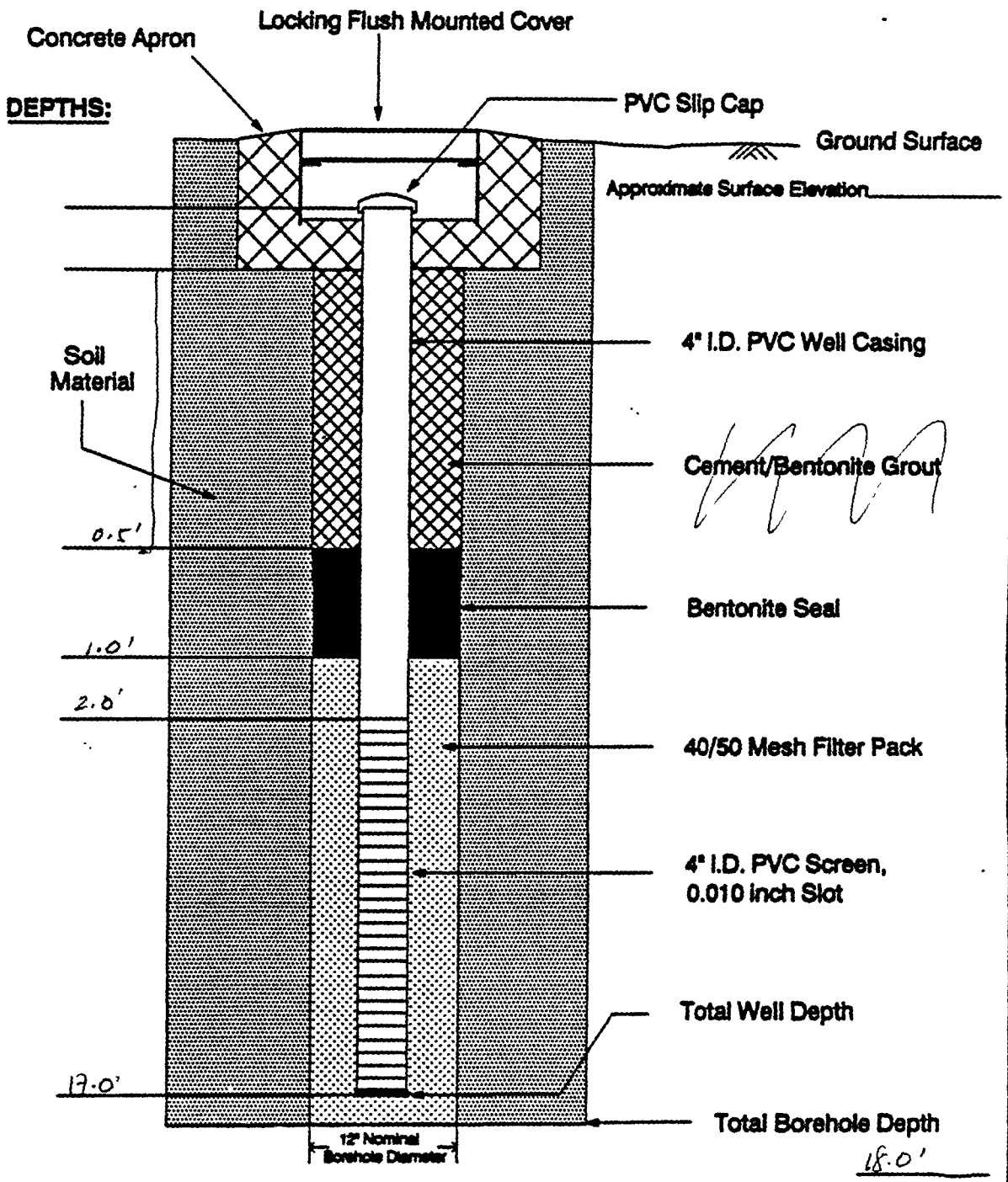

INTERNATIONAL TECHNOLOGY CORPORATION

(Not To Scale)

NS4 – MW4

FIELD LOG OF BORING

SHEET 1 OF 3

PROJECT NO. 409767 PROJECT NAME NAVSTA HAZWRAP

GEOLOGIST/ENGINEER Y. Lu

PURPOSE Soil sampling and MW installation

LOCATION NS4 – DPDO

LOCATION REFR. NOT SURVEYED

METHOD OF LOCATING NOT SURVEYED

ELEV. REFR. NOT SURVEYED

HOW MEASURED ELEV. AT BORING NOT MEASURED

SITE CONDITIONS AT BORING The site was clean and proper for the drilling work

WEATHER CONDITIONS Sunny and breezy

DRILLING CO. Drillline Co. DRILLER Joe

TYPE OF DRILL RIG CME 61 TYPE OF DRILLING Hollow Stem Auger

DIA. OF BORING (In.) 10 HAMMER WT. (lb.) 240 DROP (In.) 30

CASING 4" SCH40 PVC SLOT SIZE 0.010" BACKFILL N/A

DRILLING MUD N/A

HOW GROUNDWATER DEPTH MEASURED GW measured from ground surface using a water meter.

DECONTAMINATION PROCEDURES Steam clean augers. Sampler was triple rinsed w/ disin water.

BORING COND. AT COMPLETION A metal casing was mounted to protect well cap.

NOTES The location of this well was moved about 3 feet to the east.

LOCATION SKETCH

FIELD LOG OF BORING WS4-MW4

PROJECT NUMBER: 409767	PROJECT NAME: NAVSTA	SHEET 2 OF 3
ENGINEER/GEOLOGIST: Y Lu	COORDINATES: NM	
GROUND SURF. ELEV.: Nm	GWL Depth 10.40' Date/Time 130	DATE STARTED: 1/29/91
TOP OF CASING ELEV.: Nm	GWL Depth Date/Time	DATE COMPLETED: 1/29/91

DEPTH, FT.	BLOWS/FOOT	SAMPLE TYPE AND NO.	USCS	MEASURED CONSISTENCY TSF	RECOVERY	RINGS SAVED/ ~~OVA~~ READINGS	WELL CASING	WELL BACKFILL	Consistency/Color/Minor Material/Major Material/Moisture/Additional Descript.
					0	ppm			GW measured from ground surface Air monitor background = 0 ppm
					50	5	4" SCH40 Blank PVC	Concrete	6" ASPHALT Loose, dk brn (10YR 3/3) sandy GRAVEL, moist; coars grained sand Gravels to 2cm in diameter. 1.5'
		MW4-S01	GP/GS						
			cl						V. stiff v dk gray (10YR 3/1) sandy CLAY moist, med grained sand, some coarse sand. occasionally gravels to 1cm diameter 3.0'
			SP					Seal	Dense, yel brn (10YR 5/4) SAND, moist, fine grained sand, w/ some shell fragments stain spots & thin lamination found.
5					50	0			Same as above. ~~5.5'~~
		MW4-S02	cl						~~Dense~~ 6.5 ~~Stiff dk gray (7.5YR N4) silty SAND, wet; plant roots found~~ V. stiff, dk yel brn (10YR 3/4) CLAY, moist, Some med Sand.
									Same as above (No sample recovery. estimated from soil cuttings).
10			ml		100	0	4" SCH40 PVC with 0.010' slotted screen		V ~~dense~~ stiff, dk ~~brn~~ yel brn (10YR 3/4) ~~silty~~ clayey SILT, moist.
		MW4-S03							Same as above with increase in silt contents 13.0'
			cl						V stiff dk yel brn (10YR 3/4) lean CLAY, moist some white gypsum and salt ⊕ minerals found
15					100	0			
									Same as above
		MW4-S04	SM					#0/30 Lonestar Sand	19.0' V dense, dk yel brn (10YR 3/4) silty SAND, moist, fine grained sand. abundant mica.
20									TOD = 22.0'
							CAP		

NS4 **FIGURE C-3** MW4 P. 3 of 3

MONITORING WELL CONSTRUCTION LOG

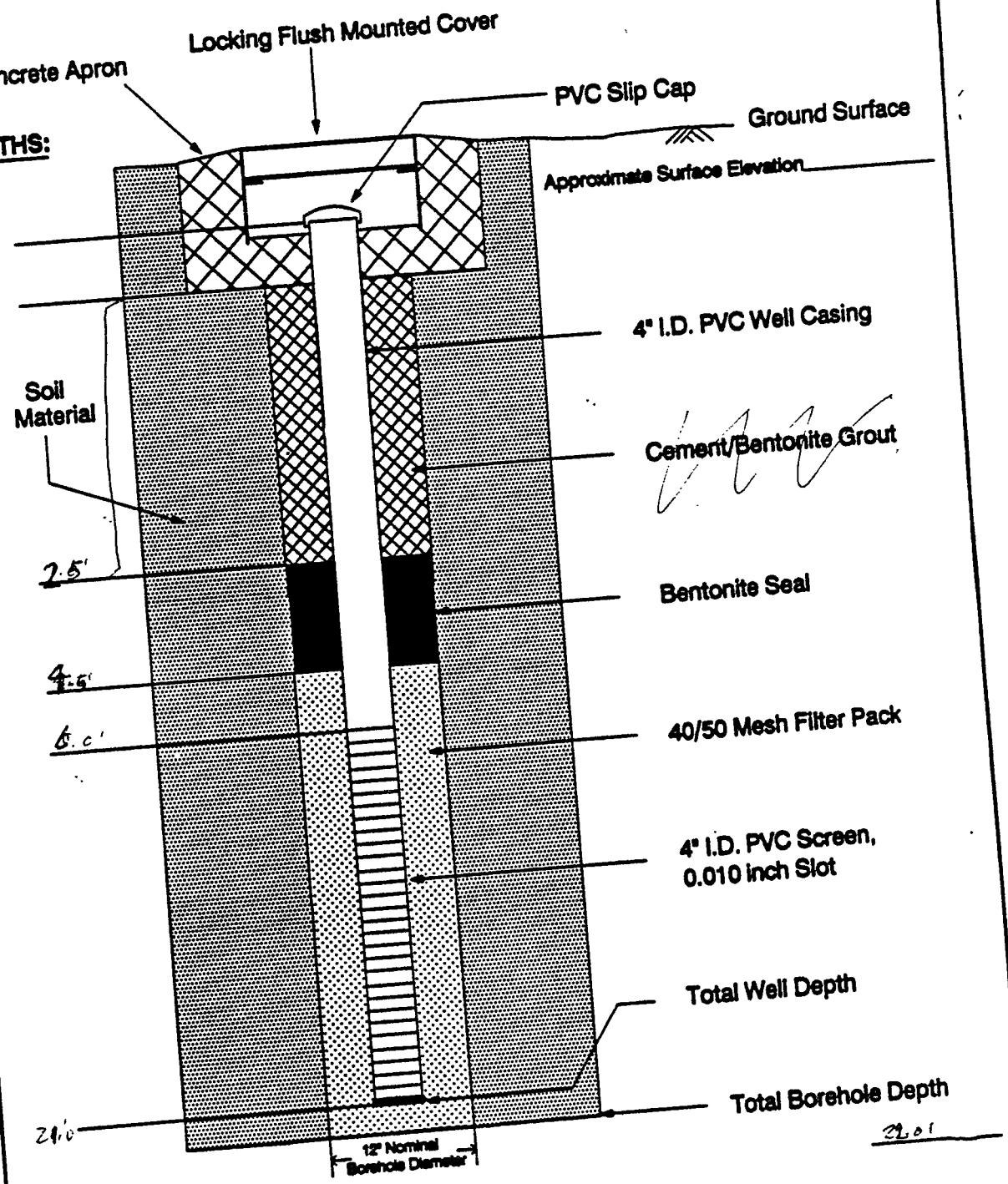

(Not To Scale)

INTERNATIONAL TECHNOLOGY CORPORATION

INTERNATIONAL TECHNOLOGY CORPORATION

FIGURE C-2

VISUAL CLASSIFICATION OF SOILS

PROJECT NUMBER: 409767-04-33	PROJECT NAME: SD NAVSTA		
BORING NUMBER: NS7-BH1	COORDINATES:		DATE: 1-22-91
ELEVATION:	GWL: Depth 16.2 Date/Time 1-22-91		DATE STARTED: 1-22-91
ENGINEER/GEOLOGIST: K. KAZMERSKI	Depth	Date/Time	DATE COMPLETED: 1-22-91
DRILLING METHODS: CME 75 OPEN FLIGHT AUGER / CONTINUOUS CORE			PAGE 1 OF 1

DEPTH (ft)	SAMPLE TYPE & NO	BLOWS ON SAMPLER PER 6" (PSI)	RECOVERY (%)	DESCRIPTION	USCS SYMBOL	MEASURED CONSISTENCY (TSF)	REMARKS SOIL OVA HNU	SOIL EXP	Venting HNU	Venting EXP
		450	75%	LOOSE TO MEDIUM DENSE, REDDISH BROWN						
				(5YR 5/3), DRY TO MOIST, FINE SILTY SAND	SM		2			
				MEDIUM STIFF TO STIFF BLACK (2.5YR 2.5/0)						
	S01			SILTY CLAY TO CLAY WITH STRONG ODOR	CL-CH		3			
5										
		450	80%	MEDIUM STIFF BROWN (7.5YR 5/2), MOIST						
				SANDY CLAY (CH)	CH					
				MEDIUM STIFF BLACK (7.5 YR 2/0), MOIST			1			
	S02			SANDY CLAY WITH MINOR GRAVEL, HAIR			2			
10				FIBERS, PLASTICS, AND SHELLS	CH					
		450	60%	MEDIUM STIFF TO VERY STIFF, MOTTLED						
				BLACK TO LIGHT REDDISH BROWN (5YR 6/3)						
	S03			MOIST SANDY CLAY (CH), STRONG ORDOR,			2			
				HAIR FIBERS, PLASTICS.	CH					
16.2' ▽ 15										
		450	100%	MEDIUM STIFF LIGHT GRAY (2.5Y 7/2),			0			
				MOIST CLAYEY SAND (SC). (S04)	SC					
	S04									
				VERY STIFF TO HARD, GRAYISH BROWN			0			
20				(10YR 5/2), MOIST, FAT CLAY WITH SHELLS	CH					
				TD= 20 ft						
25										

NOTES: HNu Units are ppm. EXP units are % of L.E.L.

- OVA - FOXBORO 128 / IN PPM

ABANDON BOREHOLE WITH CEMENT/GROUT TO SURFACE

INTERNATIONAL TECHNOLOGY CORPORATION

FIGURE C-2

VISUAL CLASSIFICATION OF SOILS

PROJECT NUMBER: 409767	PROJECT NAME: NAVAL STATION, SAN DIEGO	
BORING NUMBER: NS7-BH2	COORDINATES:	DATE: 1-23-91
ELEVATION:	GWL: Depth Date/Time	DATE STARTED: 1-23-91
ENGINEER/GEOLOGIST: K. KAZMERSKI	Depth Date/Time	DATE COMPLETED: 1-23-91
DRILLING METHODS: CME 75 OPEN FLIGHT AUGER / CONTINUOUS CORE		PAGE 1 OF 1

DEPTH ( )	SAMPLE PRESSURE TYPE-SIZE	BLOWS ON SAMPLER PER (PSI)	RECOVERY %	DESCRIPTION	USCS SYMBOL	MEASURED CONSISTENCY (TSF)	REMARKS SOIL HNu	SOIL EXP	Venting HNU	Venting EXP
		500	60	SURFACE GRAVEL OVER MEDIUM STIFF,			0			
				DARK YELLOWISH BROWN, DRY TO MOIST, CLAYEY						
				SAND TO SANDY CLAY (SC-CL) WITH CONCRETE CHIPS-3"	SC-CL					
				MEDIUM STIFF, BLACK (2.5YR 2.5/0) SANDY CLAY						
5	S01			WITH STRONG ODOR, HAIR, RUBBER/PLASTIC	CL		1			
			70							
	S02			STIFF, BROWN (7.5YR 5/4), MOIST, SANDY			1			
				CLAY WITH MOTTLED BLACK STREAKS, STRONG						
10				ODOR	CL					
			40	STIFF, YELLOWISH BROWN (10YR 5/4), MOIST						
	S03			CLAYEY SAND TO SANDY CLAY (SC-CL) WITH	SC-CL		2			
		1200		MOTTLED BLACK STREAKS GRADING TO SOLID						
				BLACK. CORE SAMPLE FROM 10' TO 12.5'						
15				ONLY, REFUSAL AT 12.5'						
			0	LITTLE DRILLING RETURNS WITH WOOD						
				CHIPS / SPLINTERS. NO CORE SAMPLE						
20				NOTE: PLACE HNU PROBE AT TOP OF					13	
				OPEN BORE HOLE AFTER AUGER REMOVED						
				TD = 21 ft						
25										

NOTES. HNu Units are ppm. EXP units are % of L.E.L.

HNU READING OF 1 TO 2 AT GROUND LEVEL OF BORE HOLE WHILE DRILLING FROM 10' TO 15'.

INTERNATIONAL TECHNOLOGY CORPORATION

FIGURE C-2

VISUAL CLASSIFICATION OF SOILS

PROJECT NUMBER: 409767-04-33	PROJECT NAME: SD NAVSTA		
BORING NUMBER: NS7-BH3	COORDINATES:		DATE: 1-22-91
ELEVATION:	GWL: Depth 19.4'	Date/Time 1-22-91	DATE STARTED: 1-22-91
ENGINEER/GEOLOGIST: K. KAZMERSKI	Depth	Date/Time	DATE COMPLETED: 1-22-91
DRILLING METHODS: CME 75 OPEN FLIGHT AUGER/ CONTINUOUS/CORE			PAGE 1 OF 1

DEPTH (ft)	SAMPLE TYPE & NO	BLOWS ON SAMPLER (PSI)	RECOVERY (ft)	DESCRIPTION	USCS SYMBOL	MEASURED CONSISTENCY (TSF)	REMARKS SOIL OVA HNu	REMARKS SOIL EXP	REMARKS Venting HNU	REMARKS Venting EXP
		250	80%	LOOSE TO MEDIUM STIFF DUSKY RED (10R 3/3), FINE	SM		0			
				SILTY SAND (SM)						
	S01			MEDIUM DENSE DARK REDDISH BROWN	SM					
				(5YR 3/3) FINE SILTY SAND WITH MINOR GRAVEL						
5				1" TO 2" (SM)						
		500	90%	MEDIUM DENSE TO DENSE, BROWN (7.5YR 5/3)	SC		0			
		TO		FINE CLAYEY SAND (SC) WITH MINOR GRAVEL						
		750		≤1" AND CONCRETE CHIPS						
	S02			MEDIUM DENSE TO DENSE BROWN (7.5YR	CH					
10				5/3), SANDY FAT CLAY (CH)						
		750	75%	SAME AS ABOVE			0			
		TO		LOOSE LIGHT YELLOW BROWN WELL GRADED	SW					
		1000		SAND (SW)						
	S03			STIFF; GRAYISH BROWN (10YR 5/2) SANDY	CH					
15				FAT CLAY (CH) MINOR GRAVEL & MICA						
		500	90%	SAME AS ABOVE			0			
				VERY STIFF DARK GRAY (5YR 4-1), MOIST	CH					
				SANDY FAT CLAY WITH MICA (CH)						
19.4' ▽	S04			SAME AS ABOVE						
20										
				TD = 20 FT						
25										

NOTES: HNu Units are ppm. EXP units are % of L.E.L.

. OVA - FOX BORO 128 IN PPM

ABANDON BORE HOLE WITH CEMENT / GROUT TO SURFACE

FIELD LOG OF BORING NS7-BH4

PROJECT NUMBER: 409767	PROJECT NAME: NAVY HAZWRAP	SHEET 2 OF 2
ENGINEER/GEOLOGIST: Y. Lu	COORDINATES: NM	
GROUND SURF. ELEV.: NM	GWL Depth NM Date/Time	DATE STARTED: 1/23/91
TOP OF CASING ELEV.: NM	GWL Depth NM Date/Time	DATE COMPLETED: 1/23/91

DEPTH, FT.	BLOWS/FOOT	SAMPLE TYPE AND NO.	USCS	MEASURED CONSISTENCY TSF	RECOVERY	RINGS SAVED/ OVA READINGS ppm	WELL CASING	WELL BACKFILL	Consistency/Color/Minor Material/Major Material/Moisture/Additional Descript.
					30	5		Backfilled w/ Bentonite Concrete	~~0" GRAVELS (Road fills).~~ Loose, dk yel brn (10YR 3/6) SAND, dry; fine to coarse grained sand. some gravels to 4cm in diameter. (Back fill materials) No sample recovery — 2.0'
		BH4-S01-5	SW						
			SW/SC		~~30~~ 30	~~4~~ 3			Dense, blk (10YR 2/1) clayey SAND; dry; fine to coarse ~~sand~~ grained sand. some gravels to 2cm in diameter. Abundant casts of plant root. odor of organic vapor.
5									
			SM		~~30~~	~~8~~			med dense, yel brn (10YR 5/8) silty SAND, dry; fine to med. grained sand. Some coarse sand. No sample recovery.
		BH4-S02-10	SM		~~30~~ 50	~~4~~ 20			Very dense, blk (10YR 2/1) clayey SAND, moist; med to coarse grained sand. plant root found.
10			cl						
			ml		~~30~~	~~20~~			Very stiff, dk brn (10YR 3/3) lean CLAY, ~~some~~ wet; some coarse sand. — 11.0'
			~~ml~~					Backfilled w/ Bentonite Concrete	Stiff, dk gray (10YR 4/1) SILT, wet; abundant mica. trace clay. Cal. concretion found. No sample recovery ~~[illegible]~~ Very likely same as above. (Estimated from soil cuttings).
15		BH4-S02-15			~~30~~ 70	~~20~~ 0			
			sp						Dense, dk brn (10YR 3/3) SAND, saturated; fine grained sand some silt. Trace clay — 18.0'
		BH4-S04-20	cl						Very stiff, dk brn (10YR 3/3), silty CLAY, moist; Abudant marine fossils (could be the Bay PT Fm).
20									TOD = 20.0'

FIELD LOG OF BORING

SHEET 1 OF 2

PROJECT NO. 409767 PROJECT NAME NAVSTA HAZWRAP

GEOLOGIST/ENGINEER Y. Lu

PURPOSE Soil Sampling

LOCATION Sewer plant. BH4

LOCATION REFR. NOT SURVEYED

METHOD OF LOCATING NOT SURVEYED

ELEV. REFR. NOT SURVEYED

HOW MEASURED ELEV. AT BORING NOT MEASURED

SITE CONDITIONS AT BORING The site was clean and proper for the drilling work

WEATHER CONDITIONS Sunny and breezey.

DRILLING CO. Drillline Co. DRILLER Joe

TYPE OF DRILL RIG CME 61 TYPE OF DRILLING Hollow Stem Auger

DIA. OF BORING (In.) 10 HAMMER WT. (lb.) 240 DROP (In.) 30

CASING 4" SCH 40 PVC SLOT SIZE 0.010" BACKFILL Bentonite Concrete.

DRILLING MUD N/A

HOW GROUNDWATER DEPTH MEASURED N/M.

DECONTAMINATION PROCEDURES Steam clean augers. Sampler was triple rinsed w/ dioin water

BORING COND. AT COMPLETION Boring backfilled w/ Bentonite Concrete.

NOTES

LOCATION SKETCH

FIELD LOG OF BORING NS7 BH5

PROJECT NUMBER: 409767	PROJECT NAME: NAVY HAZWRAP		SHEET 1 OF 1
ENGINEER/GEOLOGIST: Y. Lu	COORDINATES: N/m		
GROUND SURF. ELEV.: N/m	GWL Depth N/m Date/Time		DATE STARTED: 1/22/91
TOP OF CASING ELEV.: N/m	GWL Depth N/m Date/Time		DATE COMPLETED: 1/22/91

DEPTH, FT.	BLOWS/FOOT	SAMPLE TYPE AND NO.	USCS	MEASURED CONSISTENCY TSF	RECOVERY %	RINGS SAVED/ OVA READINGS ppm	WELL CASING	WELL BACKFILL	Consistency/Color/Minor Material/Major Material/Moisture/Additional Descript.
									5" Gravels (Road fill)
									No sample recovery
5		BH5 S01-5	SP		40	0			Loos, dk reddish brn (5YR 3/4) SAND, dry: fine grained sand, poorly graded.
									Same as above increase in sand content.
									9.0'
10		BH5 S02-10	SP		40	0			Dense, lt reddish brn (5YR 6/4) SAND, dry: med to coarse grained ~~sump~~ sand, some gravels to 0.5 cm in diameter. Mainly quartz, abundant feldspars in white color.
			SC						Dense, dk yel brn (10YR 4/3) Sandy CLAY, moist: fine grained sand. Pin pores to 1mm diameter found. 12.0'
			SP						Dense, dk yel brn (10YR 4/3) Lean SAND moist: fine grained sand.
			ml						Stiff, dk yel brn (10YR 4/3) SILT, moist:
15		BH5 S03-15			100	0			No sample recovery
20		BH5 S04-20	SC/SW		30	0			Very dense, dk yel brn (10YR 4/3) clayey SAND, ~~moist~~ wet. fine to coarse grained sand. well graded. ~~Trace of~~ Casts of plant roots found.
									TOD = 20'.

INTERNATIONAL TECHNOLOGY CORPORATION

FIGURE C-2

VISUAL CLASSIFICATION OF SOILS

PROJECT NUMBER: 409767	PROJECT NAME: NAVAL STATION, SAN DIEGO		
BORING NUMBER: NS7-MW1	COORDINATES:		DATE: 1-23-91
ELEVATION:	GWL: Depth	Date/Time	DATE STARTED: 1-23-91
ENGINEER/GEOLOGIST: K. KAZMERSKI	Depth	Date/Time	DATE COMPLETED:
DRILLING METHODS: CME 75 OPEN FLIGHT AUGER / CONTINUOUS CORE			PAGE 1 OF 1

DEPTH (ft)	SAMPLE TYPE & NO.	BLOWS ON SAMPLER TYPE (PRESSURE)	RECOVERY (%)	DESCRIPTION	USCS SYMBOL	MEASURED CONSISTENCY (TSF)	REMARKS SOIL HNu	REMARKS SOIL EXP	REMARKS Venting HNU	REMARKS Venting EXP
		500	80%	GRAVEL COVER OVER 1" to 2" OF			0			
		PSI		ASPHALT OVER A STIFF TO VERY STIFF, BROWN						
				(7.5YR 5/3) SANDY CLAY (CH) TO 4'	CH					
				VERY STIFF TO HARD, REDDISH BROWN (2.5YR 4/4) SANDY						
5	S01			CLAY, MOIST WITH FINE WHITE SPECKS AND						
		1000	100%	white clay nodules CH	CH		0			
		PSI		VERY STIFF, STRONG-BROWN (7.5YR 5/6), MOIST						
	S02			SANDY CLAY WITH MOTTLED BLACK STREAKS						
10										
		750	60%				0			
	S03			LOOSE, VERY PALE BROWN (10YR 7/3) TO YELLOW						
				(10YR 7/6) POORLY GRADED, FINE TO						
15				MEDIUM SAND (SP)	SP					
		500	100%				0			
17.06 ▽				STIFF, BROWN (7.5YR 5/3), MOIST						
	S04			SANDY LEAN CLAY TO SANDY FAT CLAY (CL-CH)	CL-CH					
				CALCAREOUS CLAYS AT WT, MOIST WITH						
20				ABUNDANT SHELLS AT 19.5 ft TO 20.0 ft						
				GRADING INTO A MEDIUM DENSE, LIGHT OLIVE,						
				MOIST CLAYEY SAND (SC)						
25										
				BROWN (7.5YR 4/3) WET SANDY CLAY	CL					
				(CL) TO TD @ 31 ft						
30										

NOTES: HNu Units are ppm. EXP units are % of L.E.L. TD = 31 FT

WATER LEVEL FROM PRIOR BORINGS IN THIS AREA IS APPROXIMATELY 16.5 ft AT 20 ft THIS BORING DID NOT INCOUNTER GROUNDWATER, MOST LIKELY DUE TO THE LOW PERMABILITY OF THE CLAYEY SOILS. AFTER REDRILLING WITH 10 inch AUGER TO 31 ft, SET CASING AT 30 ft, DEPTH TO GW MEASURED AT 17.06.

FIGURE C-3

NS7- MW1

MONITORING WELL CONSTRUCTION LOG

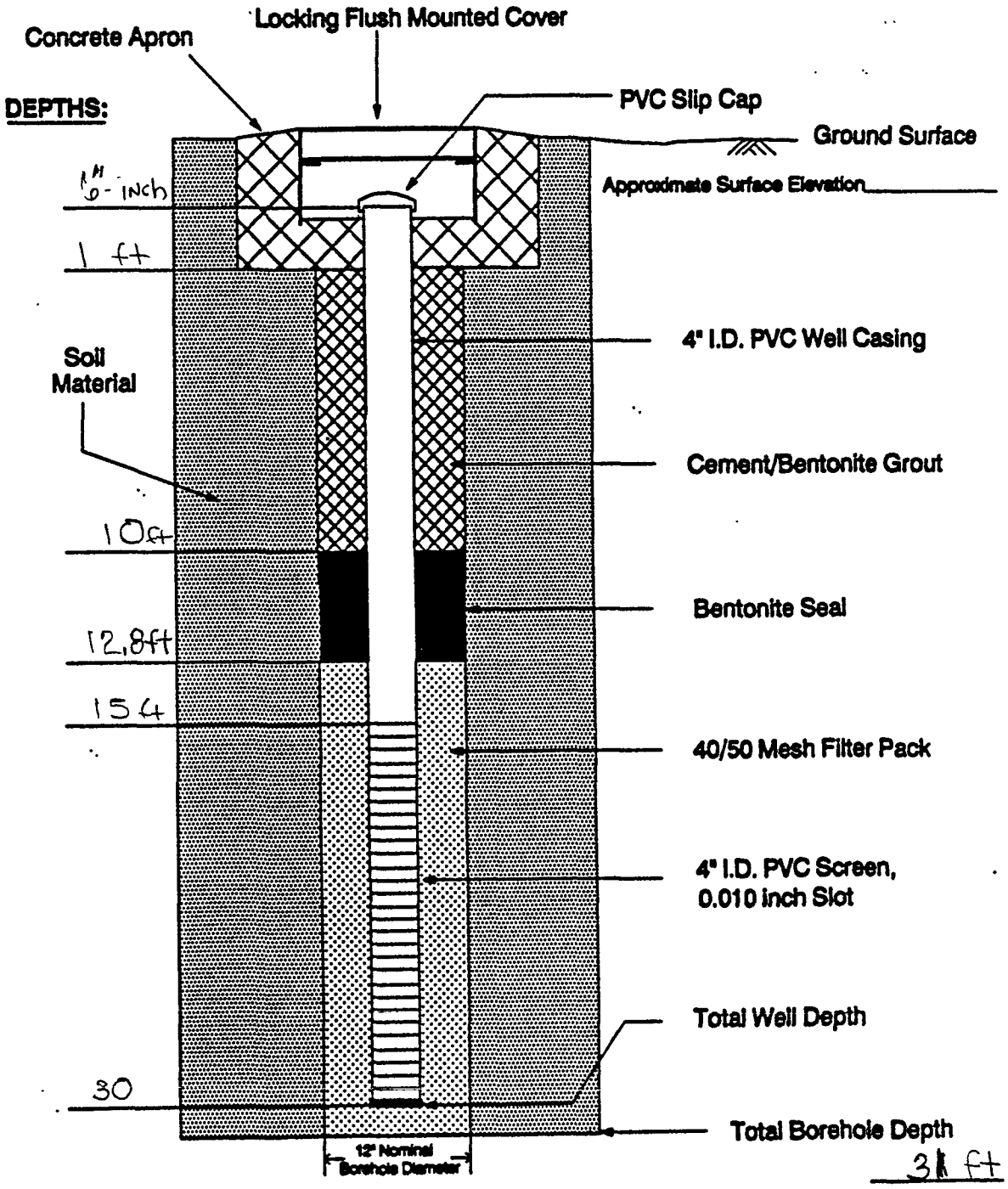

INTERNATIONAL TECHNOLOGY CORPORATION

(Not To Scale)

INTERNATIONAL TECHNOLOGY CORPORATION

FIGURE C-2

VISUAL CLASSIFICATION OF SOILS

PROJECT NUMBER: 409767	PROJECT NAME: NAVY HAZWRAP	
BORING NUMBER: MW02-1157	COORDINATES: N/W	DATE: 1/22/91
ELEVATION: NM	GWL: Depth 15.80' Date/Time 1210, 1/22	DATE STARTED: 1/22/91
ENGINEER/GEOLOGIST: Y. Lu, DeCarson	Depth Date/Time	DATE COMPLETED: 1/22/91
DRILLING METHODS: CME Hollow Stem Augers.		PAGE 1 OF 1

DEPTH (ft)	SAMPLE TYPE & NO	BLOWS ON SAMPLER PER ( )	RECOVERY %	DESCRIPTION	USCS SYMBOL	MEASURED CONSISTENCY (TSF)	REMARKS SOIL HNu	SOIL EXP	Venting HNU	Venting EXP
							ppm			
				No sample recovery for 0-5'.						
5										
10	MW-2 S01-10		30	Loose, dk yel brn (10YR 4/6) SAND, dry; med. sand, poorly graded	~~PS~~ SP		0			
15	MW-2 S02-15		100	Stiff, dk yel. brn (10YR 3/6) CLAY, moist; casts of plant root's found. Fine sand and silt contents increase w/ depth some white cal. concretion found @ 15'.	cl		0			
20	MW-2 S03-20		40	Stiff, dk brn (10YR 3/3) silty SAND, wet. " " " " " CLAY, " ; Dense, wht (10YR 8/2), silty SAND, wet fine sand abundant shells.	sm sm		0			
25				TOD = 27.0'						
30										

NOTES. HNu Units are ppm. EXP units are % of L.E.L.

FIGURE C-3

NS7 - MW2

MONITORING WELL CONSTRUCTION LOG

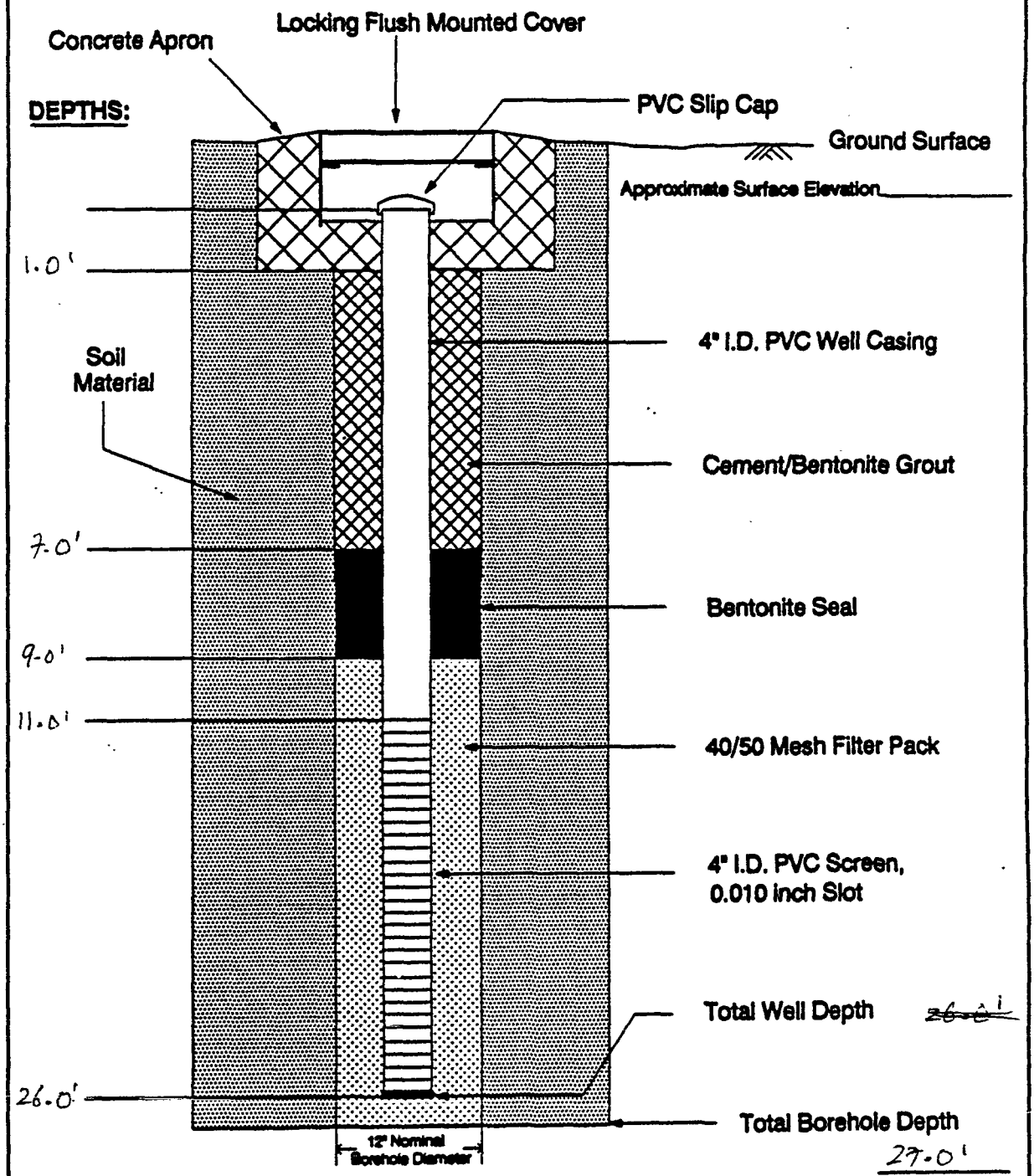

INTERNATIONAL TECHNOLOGY CORPORATION

(Not To Scale)

FIELD LOG OF BORING NS7-MW3

PROJECT NUMBER: 609767	PROJECT NAME: NAVY HAZWRAP	SHEET 2 OF 3
ENGINEER/GEOLOGIST: V Lu	COORDINATES: NM	
GROUND SURF. ELEV.: NM	GWL Depth 19.30' Date/Time 1/23, 1700	DATE STARTED: 1/23/91
TOP OF CASING ELEV.: NM	GWL Depth 13.00' Date/Time 1/24, 1020	DATE COMPLETED: 1/24/91

DEPTH, FT.	BLOWS/FOOT	SAMPLE TYPE AND NO.	USCS	MEASURED CONSISTENCY TSF	% RECOVERY	RINGS SAVED/ ppm READINGS	WELL CASING	WELL BACKFILL	Consistency/Color/Minor Material/Major Material/Moisture/Additional Descript.
									GW level measured from ground surface.
					30	0			6" GRAVELS (Road fill)
			SC					Grout	Loose, brn (10YR 5/4) clayey SAND, dry; fine to coarse grained sand, abundant gravel to 5 cm in diameter (Backfill material).
									No sample recovery.
5		MW3-S01-5	CL		50	15	4" SCH40 BLANK PVC	Bentonite	Stiff, charcoal blk (10YR 2/1) sandy CLAY, moist; fine to coarse grained sand. Abundant plant roots. Organic odor. Some gravels to 5 cm diameter found. Fabrics found.
									Same as above
10		MW3-S02-10			75	0			Same as above. No sample recovery. estimated from soil cuttings.
			CL						Very stiff, dk yel brn (10YR 3/6) lean CLAY, wet; occasionally some med sand. Pinpores and cast of plant fragments found.
15		MW3-S03-15	GP		75	0	4" PVC with 0.01" slot	40/30 Lonestar Sand	Very dense, ~~dk brn (~~ yel brn (10YR 5/8) ~~Gravelly SAND, Saturated~~ sandy GRAVEL, Saturated; coarse grained sand. Gravels to 3 cm diameter.
									Very stiff, pale brn (10YR 6/3) SILT, moist; 17.0'
20		MW3-S04-20	ML						~~1700 GW level measured at 19.30' deep.~~

FIELD LOG OF BORING NS7-MW3

PROJECT NUMBER: 409767	PROJECT NAME: NAVY LAZKURIP		SHEET 3 OF 3
ENGINEER/GEOLOGIST: [illegible]	COORDINATES: N/A		
GROUND SURF. ELEV.: N/A	GWL	Depth 19.30' Date/Time 1/23, 1700	DATE STARTED: 1/23/91
TOP OF CASING ELEV.: N/A	GWL	Depth 13.00' Date/Time 1/24, 1020	DATE COMPLETED: 1/24/91

DEPTH, FT.	BLOWS/FOOT	SAMPLE TYPE AND NO.	USCS	MEASURED CONSISTENCY TSF	RECOVERY	RINGS SAVED/ OVA READINGS	WELL CASING	WELL BACKFILL	Consistency/Color/Minor Material/Major Material/Moisture/Additional Descript.
							4" Sch 40 PVC w/ 0.010" screen	#0/30 Lonestar Sand	
							CAP		
25									TD = 25 Feet

FIELD LOG OF BORING

SHEET 1 OF 3

PROJECT NO. 409767 PROJECT NAME NAVSTA HAZWRAP

GEOLOGIST/ENGINEER Y. Lu

PURPOSE Soil Sampling. Monitoring well installation.

LOCATION Sewer plant. MW-3

LOCATION REFR. NOT SURVEYED

METHOD OF LOCATING NOT SURVEYED

ELEV. REFR. NOT SURVEYED

HOW MEASURED ELEV. AT BORING NOT MEASURED

SITE CONDITIONS AT BORING The site was clean and proper for the drilling work

WEATHER CONDITIONS Sunny and breezy

DRILLING CO. Drillline Co. DRILLER Joe

TYPE OF DRILL RIG CME 61 TYPE OF DRILLING Hollow Stem Auger

DIA. OF BORING (In.) 10 HAMMER WT. (lb.) 240 DROP (In.) 30

CASING 4" SCH 40 PVC SLOT SIZE 0.010" BACKFILL N/A

DRILLING MUD N/A

HOW GROUNDWATER DEPTH MEASURED Depth of GW measured from ground surface.

DECONTAMINATION PROCEDURES Steam clean augers. Sampler was triple rinsed w/ disin water.

BORING COND. AT COMPLETION

NOTES

LOCATION SKETCH

FIGURE C-3

N57-MW3

MONITORING WELL CONSTRUCTION LOG

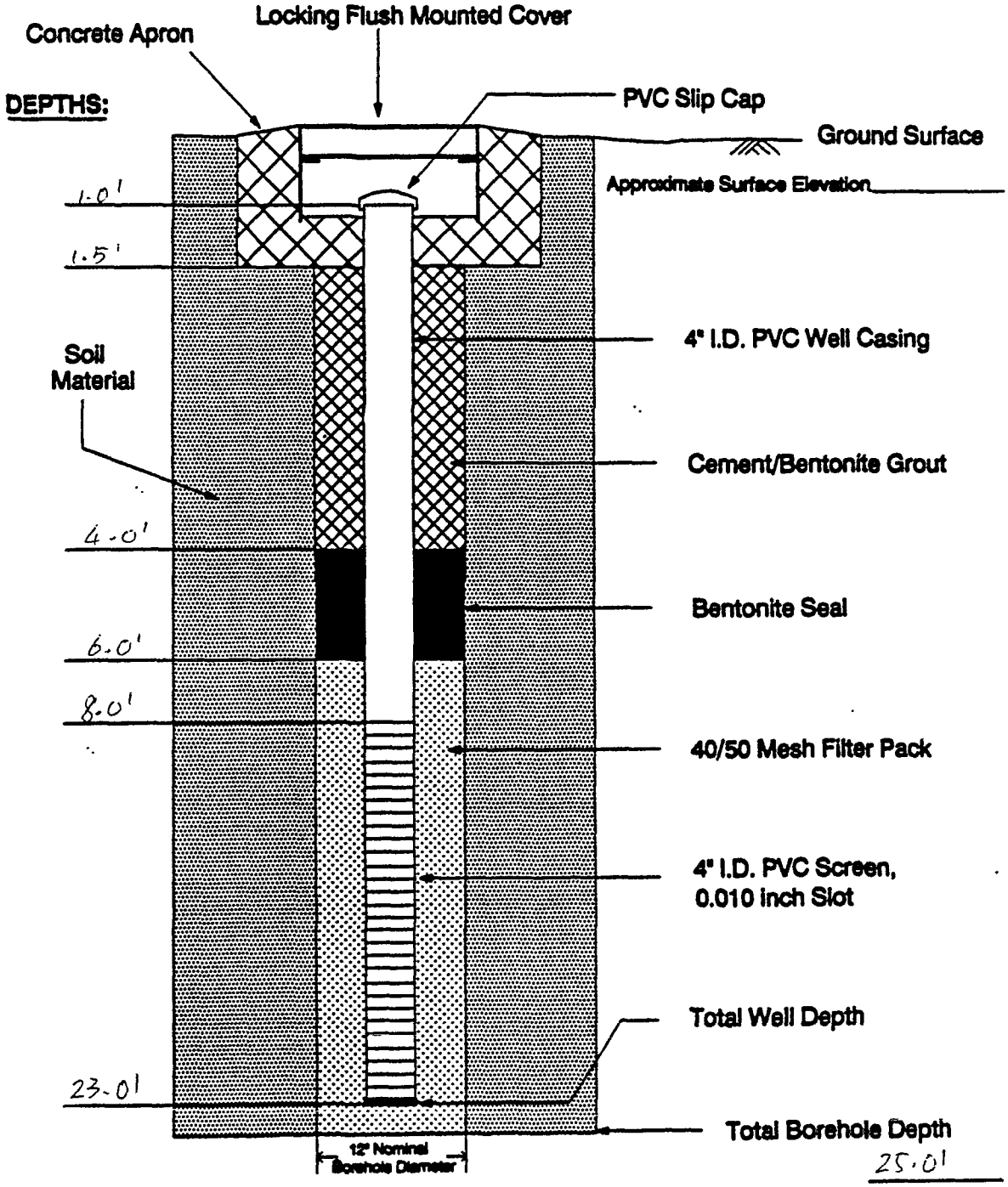

INTERNATIONAL TECHNOLOGY CORPORATION

(Not To Scale)

FIELD LOG OF BORING NS8-BH1

PROJECT NUMBER: 409767-04-33	PROJECT NAME: NAVSTA SAN DIEGO	SHEET	OF
ENGINEER/GEOLOGIST: K. KAZMERSKI	COORDINATES:		
GROUND SURF. ELEV.:	GWL Depth 14 ft Date/Time 1045	DATE STARTED: 1-30-90	
TOP OF CASING ELEV.:	GWL Depth 10.4 ft Date/Time 1055	DATE COMPLETED: 1-30-90	
	9.8 ft 1100		

DEPTH, FT.	~~PROGRESS BLOWS/FOOT~~	SAMPLE TYPE AND NO.	USCS	MEASURED CONSISTENCY TSF	RECOVERY %	RINGS SAVED/ ~~OVA~~ READINGS ppm	WELL CASING	WELL BACKFILL	Consistency/Color/Minor Material/Major Material/Moisture/Additional Descript.
									- HNU readings of 2-3 ppm at open borehole with augers removed - Abandon borehole with bentonite to above GWL then cement/bentonite grout mixture to surface
					80	0			ASPHALT WITH GRAVEL (3" TO 4") OVER A LOOSE, DARK YELLOW BROWN (10YR 4/4) COARSE TO MEDIUM SAND WITH ASPHALT COATED GRAVEL
			CL			2			STIFF, DARK BROWN (10YR 3/3), SILTY CLAY (CL)
		S02	SM			4			LOOSE, DARK YELLOW BROWN (10YR 3/6) MEDIUM SILTY SAND WITH SHELLS (SM)
5	500		SM		60	0			LOOSE, LIGHT YELLOWISH BROWN MEDIUM SAND WITH GRAVEL (SM) AND SHELLS
									GRADING TO
			SM			1			LOOSE, LIGHT YELLOWISH BROWN FINE SILTY SAND WITH DECREASING GRAVEL AND SHELLS, MOIST,
		S01				1			
						4			
						2			
GWL ▽ 10.4 10	500		SM		80	0			LOOSE TO MEDIUM DENSE, MEDIUM, OLIVE GRAY (5Y 4/2) SILTY SAND WITH SHELLS (SM), WET
			CL-CH						SOFT TO MEDIUM STIFF, OLIVE GRAY (5Y 4/2), SANDY CLAY TO FAT CLAY (CL-CH), MICACEOUS, WET
15			CH						SOFT, VERY DARK GRAY CLAY, WET (CH)
									TD = 15 FT
20									

FIELD LOG OF BORING NS8-BH2

PROJECT NUMBER: 409767-04-33	PROJECT NAME: NAVSTA, SAN DIEGO	SHEET 1 OF 1
ENGINEER/GEOLOGIST:	COORDINATES:	
GROUND SURF. ELEV.:	GWL Depth 10' Date/Time 1230	DATE STARTED: 1-30-91
TOP OF CASING ELEV.:	GWL Depth Date/Time	DATE COMPLETED: 1-30-91

HNU READING OF 275 PPM WITH PROBE IN TOP 1 FT OF OPEN BOREHOLE WITH AUGERS REMOVED.

DEPTH, FT.	~~PENETRATION BLOWS/FOOT~~ PID	SAMPLE TYPE AND NO.	USCS	MEASURED CONSISTENCY TSF	RECOVERY %	RINGS SAVED/ ~~OVA~~ HNU READINGS	WELL CASING	WELL BACKFILL	Consistency/Color/Minor Material/Major Material/Moisture/Additional Descript.
	200				80	0			ASPHALT WITH GRAVEL (3"-4") OVER LOOSE TO MEDIUM DENSE, DARK REDDISH BROWN (2.5YR 3/4) COARSE TO MEDIUM CLAYEY SAND (SC)
									LOOSE TO MEDIUM DENSE, OLIVE BROWN (2.5Y 4/3) FINE SILTY SAND, MOIST (SM) WITH SHELLS
5	500		SM-SP		80	3			MEDIUM DENSE, LIGHT OLIVE BROWN (2.5Y 5/4) SILTY SAND TO POORLY graded SAND WITH SHELLS (SM-SP)
						10			
						18			
						25			
		S01	X SM			32			MEDIUM DENSE, OLIVE BROWN, (2.5Y 4/3) FINE SILTY SAND, MOIST (SM) WITH SHELLS, SLIGHT HYDROCARBON ODOR
10	500	S02	X SP		65	400			MEDIUM DENSE, OLIVE GRAY (5Y, 5/2) MEDIUM POORLY GRADED SAND WITH SHELLS, STRONG DIESEL ODOR
			CH			40			MEDIUM STIFF TO STIFF, DARK BROWN (10YR 5/3), SILTY CLAY TO CLAY (6" TO 8" THICK) DIESEL ODOR
			SM			25			MEDIUM DENSE, OLIVE GRAY (5Y 5/2) FINE SILTY SAND (SM) WITH SHELLS. SOME DIESEL ODOR
						10			
15									TD = 15 ft
20									

GWL 10'

FIELD LOG OF BORING NS8-BH3

PROJECT NUMBER: 409767-B-33	PROJECT NAME: NAVSTA, SAN DIEGO		SHEET 1 OF 1
ENGINEER/GEOLOGIST: K. KAZMERSKI	COORDINATES:		
GROUND SURF. ELEV.:	GWL Depth 11.2 FT Date/Time 1205		DATE STARTED: 2-1-91
TOP OF CASING ELEV.:	GWL Depth Date/Time		DATE COMPLETED: 2-1-91

DEPTH, FT.	~~PENETRATION BLOWS/FOOT~~ PS	SAMPLE TYPE AND NO.	USCS	MEASURED CONSISTENCY TSF	RECOVERY %	RINGS SAVED/ OVA READINGS	HNU WELL CASING	WELL BACKFILL	Consistency/Color/Minor Material/Major Material/Moisture/Additional Descript.
									HNU READING AT OPEN BOREHOLE 0 PPM
	500				95	0	0		ASPHALT (3" TO 4") WITH GRAVEL OVER LOOSE TO MEDIUM DENSE, MEDIUM SAND (SP)
			SM						LOOSE TO MEDIUM, DARK BROWN (2.5Y 4/4) TO OLIVE BROWN (2.5Y 4/3) FINE SILTY SAND WITH SHELLS (SM)
			CH						STIFF DARK BROWN, CLAY (CH)
			SM						MEDIUM DENSE, LIGHT OLIVE BROWN, FINE SILTY SAND WITH SHELLS (SM)
5	501		SM		75		0		MEDIUM DENSE, OLIVE (5Y 6/4), FINE SILTY SAND MOIST (SM) WITH SHELLS, ~~GRADING INTO~~ WITH STIFF, DARK OLIVE (5Y 3/2) CLAY (CH-CL) LENSES 3" TO 4" THICK, MINOR GRAVEL
		501	CH						
10	502				70		0		MEDIUM DENSE, OLIVE BROWN (2.5Y 4/3) MOIST CLAYEY SAND (SC) TO SANDY CLAY (CL) WITH SHELLS GRADING TO A MEDIUM STIFF, DARK OLIVE BROWN FAT CLAY (CH) WITH MICA, WET
11.2' ▽		502	CH						
			SC						MEDIUM DENSE, OLIVE (5Y 5/4) MEDIUM SAND WITH CLAY (SC) WITH ABUNDANT SHELLS, WET
			SM-CL						MEDIUM STIFF, OLIVE BROWN (2.5 4/3) FINE SILTY SAND TO SANDY CLAY WET (SM-CL) WITH MICA AND DARK THIN VARS
15									TD = 15 ft
20									

FIELD LOG OF BORING NS8 - BH 4

PROJECT NUMBER: 409767	PROJECT NAME: NAVSTA, SAN DIEGO		SHEET 1 OF 1
ENGINEER/GEOLOGIST: K. LAZMBRSKY	COORDINATES:		
GROUND SURF. ELEV.:	GWL Depth 10.1' Date/Time 1-30/1550	DATE STARTED: 1-30-91	
TOP OF CASING ELEV.:	GWL Depth Date/Time	DATE COMPLETED: 1-30-91	

DEPTH, FT.	PENETR. BLOWS/FOOT	SAMPLE TYPE AND NO.	USCS	MEASURED CONSISTENCY TSF	RECOVERY %	RINGS SAVED/ OVA READINGS PPM	WELL CASING	WELL BACKFILL	Consistency/Color/Minor Material/Major Material/Moisture/Additional Descript.
									- ABANDON BOREHOLE WITH BENTONITE TO ABVE GWL THEN BACKFILL WITH CEMENT/BENTONITE MIXTURE TO SURFACE
	500		CL		75	0			ASPHALT WITH GRAVEL (HARD) OVER CONCRETE (4" TO 5") OVER MEDIUM DENSE, OLIVE BROWN (2.5Y 4/3) ELAYEY SAND (CL) MOIST WITH SHELLS
			CL CH			1			STIFF, DARK OLIVE BROWN (2.5Y 3/3) CLAY (CL-CH)
		S01 X	SC			1			MEDIUM DENSE, LIGHT OLIVE BROWN (2.5Y 5/3) FINE SILTY SAND SC WITH CLAY LENSES AND SHELLS
5	500				55	0			LOOSE TO MEDIUM DENSE, OLIVE GRAY (5Y 4/2) FINE SILTY SAND (SC) WITH SHELLS
									STIFF, DARK OLIVE (5Y 5/4) SANDY CLAY (CL) MOIST
		S02 X	SM			1 0			MEDIUM DENSE, LIGHT OLIVE BROWN (2.5Y 5/3) FINE SILTY SAND, MOIST WITH SHELLS DECREASING WITH DEPTH. MICACEOUS.
10.1' GWL									
10	600		CL		60				STIFF, YELLOWISH BROWN (10YR 5/6) SANDY CLAY (CL)
						150			MEDIUM DENSE, OLIVE BROWN (2.5Y 4/3) COARSE TO MEDIUM, POORLY GRADED SAND; WET (SP) WITH
						170			STIFF YELLOWISH BROWN (10YR 5/6) CLAY (CL-CH) LENSES
						100			GRADING TO
			ML			1			LOOSE TO MEDIUM DENSE, DARK OLIVE BROWN FINE SANDY SILT TO SILT (ML) WITH THIN DARK LAYERS
15									TD = 15 ft
20									

FIELD LOG OF BORING NS8-BH5

PROJECT NUMBER: 409767	PROJECT NAME: NAVSTA	SHEET 1 OF 1
ENGINEER/GEOLOGIST: Y. Lu	COORDINATES: NM	
GROUND SURF. ELEV.: NM	GWL Depth NM Date/Time	DATE STARTED: 2/1/91
TOP OF CASING ELEV.: NM	GWL Depth NM Date/Time	DATE COMPLETED: 2/1/91

DEPTH, FT.	BLOWS/FOOT	SAMPLE TYPE AND NO.	USCS	MEASURED CONSISTENCY TSF	RECOVERY %	RINGS SAVED/ OVA READINGS ppm	WELL CASING	WELL BACKFILL	Consistency/Color/Minor Material/Major Material/Moisture/Additional Descript.
									- Boring was drilled w/ 6" (OD) Hollow Stem Augers - Air monitoring ~~was~~ background = 0 ppm - Borehole was filled w/ Bentonite concrete when boring was completed.
					60	0		Bentonite concrete	6" ASPHALT
		BH5-S01-L	SC						Stiff, dk brn (10YR 3/3) ~~sandy~~ CLAY, moist; med to coarse grained sand 1.5'
			SP						Very dense, dk grayish brn (10YR 4/2) gravelly SAND, ~~wet~~ moist; coarse grained sand. Gravels are to 7 cm in diameter, well rounded (hydraulic fills). Abundant shell fragments
									air monitor = 0 ppm
5		BH5-S02-10			20	0			embedded silty SAND and CLAY, wet; abundant mica.
			SP						Dense, dk brn (10YR 3/3) SAND, wet; med to coarse grained sand, w/ some gravels to 2 cm in diameter, abundant shells (hydraulic fills).
									Ground water first encountered @ ~ 9'.
10									Same as above (No sample recovery, estimate from soil cuttings
									TOD = 10.0'
15									
20									

APPENDIX C

PRECISION
SURVEY
AND
MAPPING

Morena Office Center

1094 Cudahy Place
Suite 222
San Diego, California
92110-3924

(619)275-4033

RECEIVED
APR 05 1991

April 3, 1991 File No. 91-1006

IT Corporation
312 Directors Drive
Knoxville, TN. 37923

Att: Dennis Lessig

Re: San Diego Naval Station (Sites 2,3,4,7 & 8)
RLT 90/113

Dear Mr. Lessig:

Enclosed please find the complete report of the information regarding the horizontal positions and elevations established on the monitoring wells, soil borings and soil samples at the above referenced sites. Please note that this information is identical to the information previously sent to you with the exception of the information contained under the "*HORIZONTAL COORDINATES*" column.

As you are aware, in 1987 the IT Corporation retained this firm to determine the horizontal and vertical positions of certain monitoring wells and soil borings on sites 2 and 3 at the Naval Station. The horizontal positions provided to your company were based upon the published coordinate positions of found and identified monuments 25, 26 and 53 as published in Naval Public Works Drawing No. 23567, dated 8/29/78.

During the course of compiling the recent data on sites 2, 4, 7 and 8 we have extended our control network and have had an opportunity to incorporate a number of additional Naval Control Monuments into our control network. After intensive investigation we have discovered that these additional monuments are in conflict with the monuments used in our original work and previously identified to us by base personnel.

After due consideration to all found Naval Control Monuments we have decided to reorient our entire control network to a location which best satisfies the theoretical positions of current existing Naval Control Monuments as of January 1991.

In an effort to eliminate as much confusion as possible we have elected to publish this recent information using two different

formats. The first format is based upon an extension of the previous work with no consideration given to the effect of the revised Naval Control Monuments. The second format depicts the horizontal coordinates of all previous work and all new work in the alternate system with consideration given to all of the found Naval Control Monuments. Please note that this new horizontal orientation does not affect the vertical positions of any of the work performed to date.

I trust this information satisfies your needs. If you have any questions or comments please do not hesitate to call.

Sincerely,

PRECISION SURVEY AND MAPPING

Robert L. Meadows Jr., PLS

LICENSED LAND SURVEYOR
ROBERT L. MEADOWS, JR.
No. LS 6274
Exp. 9-30-94
STATE OF CALIFORNIA

encl:

c:\bob\it91

PRECISION
SURVEY
AND
MAPPING

Morena Office Center

1094 Cudahy Place
Suite 222
San Diego, California
92110-3924

(619)275-4033

APRIL 3, 1991 FILE NO. 91-1006

SAN DIEGO NAVAL STATION
IT CORPORATION
PROJECT RLT 90/113

PROJECT POSITIONING

SITE 2 "MOLE PIER"

STATION DESIGNATION	HORIZONTAL COORDINATE	ELEVATION	REMARKS
	MONITORING WELLS		
* NS2-MW01	184,911.4 N 1,733,825.7 E	14.217 FT.	NORTH RIM PVC
* NS2-MW02	184,654.8 N 1,733,421.3 E	14.214 FT.	NORTH RIM PVC
* NS2-MW03	184,249.6 N 1,733,725.0 E	13.529 FT.	NORTH RIM PVC
* NS2-MW04	185,081.7 N 1,733,698.0 E	12.176 FT.	NORTH RIM PVC
* NS2-MW05	184,856.8 N 1,733,459.4 E	13.763 FT.	EAST RIM PVC
* NS2-MW06	184,728.6 N 1,733,513.6 E	14.165 FT.	WEST RIM PVC
* NS2-MW07	184,768.3 N 1,733,575.5 E	14.348 FT.	SOUTH RIM PVC
* NS2-MW08	184,308.3 N 1,733,283.7 E	14.300 FT.	NORTH RIM PVC
* NS2-MW09	184,117.2 N 1,733,204.7 E	13.789 FT.	NORTH RIM PVC
NS2-MW10	184,138.4 N 1,732,671.0 E	13.417 FT. 13.76 FT. 13.73 FT.	NORTH RIM P.V.C. NORTH RIM CASING PK NAIL AT GRADE

NS2-MW11	184,489.7 N 1,733,920.0 E	12.304 FT. 12.70 FT. 12.69 FT.	NORTH RIM P.V.C. NORTH RIM CASING PK NAIL AT GRADE
NS2-MW12	184,081.2 N 1,733,733.2 E	14.137 FT. 14.43 FT. 14.43 FT.	NORTH RIM P.V.C. NORTH RIM CASING PK NAIL AT GRADE

SITE 2 "MOLE PIER"

STATION DESIGNATION	HORIZONTAL COORDINATE	ELEVATION	REMARKS
	SOIL BORINGS		
NS2-BH01	184,304.5 N 1,732,708.7 E	14.8 FT.	SOIL BORING
NS2-BH02	184,223.1 N 1,732,618.4 E	14.1 FT.	SOIL BORING
NS2-BH03	184,150.7 N 1,732,691.2 E	14.4 FT.	SOIL BORING
NS2-BH04	184,257.0 N 1,732,817.5 E	15.4 FT.	SOIL BORING
NS2-BH05	184,216.5 N 1,732,956.0 E	14.5 FT.	SOIL BORING
NS2-BH06	184,440.6 N 1,733,075.6 E	15.7 FT.	SOIL BORING
NS2-BH07	184,664.8 N 1,733,197.9 E	13.3 FT.	SOIL BORING
NS2-BH08	185,095.6 N 1,733,796.1 E	12.8 FT.	SOIL BORING
NS2-BH09	184,766.3 N 1,733,870.7 E	13.8 FT.	SOIL BORING

SITE 2 "MOLE PIER"

STATION DESIGNATION	HORIZONTAL COORDINATE	ELEVATION	REMARKS
	SOIL BORINGS		
NS2-BH10	184,662.3 N 1,733,861.9 E	13.3 FT.	SOIL BORING
NS2-BH11	184,541.6 N 1,733,545.5 E	15.1 FT.	SOIL BORING

NS2-BH12	184,360.1 N 1,733,337.2 E	15.5 FT.	SOIL BORING
NS2-BH13	184,423.5 N 1,733,671.4 E	14.9 FT.	SOIL BORING
NS2-BH14	184,391.3 N 1,733,921.4 E	12.4 FT.	SOIL BORING
NS2-BH15	184,258.4 N 1,733,927.6 E	12.8 FT.	SOIL BORING

SITE 3 "SALVAGE YARD"

STATION DESIGNATION	HORIZONTAL COORDINATE	ELEVATION	REMARKS
	MONITORING WELLS		
* NS3-MW01	186,653.7 N 1,733,502.6 E	13.157 FT.	NORTH RIM PVC
* NS3-MW02	185,950.5 N 1,733,935.8 E	11.146 FT.	NORTH RIM PVC
* NS3-MW03	186,345.1 N 1,733,872.2 E	10.345 FT.	NORTH RIM PVC
* NS3-MW04	186,539.3 N 1,733,584.9 E	12.417 FT.	NORTH RIM PVC
* NS3-MW05	186,265.9 N 1,733,699.3 E	12.415 FT.	NORTH RIM PVC
	SOIL BORINGS		
* NS3-BH01	186,585.1 N 1,733,473.3 E	N/A	SOIL BORING
* NS3-BH02	186,548.7 N 1,733,792.9 E	N/A	SOIL BORING
* NS3-BH03	186,731.8 N 1,733,716.6 E	N/A	SOIL BORING
* NS3-BH04	186,593.2 N 1,733,515.9 E	N/A	SOIL BORING
* NS3-BH05	186,389.1 N 1,733,601.4 E	N/A	SOIL BORING
* NS3-BH06	186,078.7 N 1,733,851.8 E	N/A	SOIL BORING

*	NS3-BH07	185,999.5 N 1,733,963.9 E	N/A	SOIL BORING
*	NS3-BH08	186,783.1 N 1,733,655.1 E	N/A	SOIL BORING
*	NS3-BH09	186,704.2 N 1,733,644.2 E	N/A	SOIL BORING

SITE 3 "SAVAGE YARD"

STATION DESIGNATION	HORIZONTAL COORDINATE	ELEVATION	REMARKS
	SOIL BORINGS		
* NS3-BH10	186,566.0 N 1,733,694.4 E	N/A	SOIL BORING
* NS3-BH11	186,620.8 N 1,733,600.7 E	N/A	SOIL BORING
* NS3-BH12	186,300.0 N 1,733,770.0 E	N/A	SOIL BORING
* NS3-BH13	186,476.8 N 1,733,645.5 E	N/A	SOIL BORING
* NS3-BH15	186,351.7 N 1,733,872.2 E	N/A	SOIL BORING
* NS3-BH19	186,895.8 N 1,733,625.8 E	N/A	SOIL BORING

SITE 4 "DPDO STORAGE YARD"

STATION DESIGNATION	HORIZONTAL COORDINATE	ELEVATION	REMARKS
	MONITORING WELLS		
NS4-MW01	187,391.5 N 1,733,688.4 E	12.865 FT. 13.21 FT. 13.15 FT.	NORTH RIM P.V.C. NORTH RIM CASING SET LEAD & TACK
NS4-MW02	186,770.4 N 1,734,214.1 E	11.700 FT. 11.90 FT. 11.86 FT.	N.E. RIM P.V.C. NORTH RIM CASING SET LEAD & TACK
NS4-MW03	186,211.2 N 1,734,198.9 E	9.727 FT. 9.94 FT. 9.87 FT.	SOUTH RIM P.V.C. NORTH RIM CASING SET LEAD & TACK
NS4-MW04	186,945.9 N 1,734,812.3 E	12.955 FT. 13.15 FT.	WEST RIM P.V.C. NORTH RIM CASING

		13.13 FT.	SET LEAD & TACK

SOIL BORINGS

NS4-BH01	187,691.4 N 1,733,558.2 E	13.3 FT.	SOIL BORING
NS4-BH02	187,706.4 N 1,733,684.8 E	15.3 FT.	SOIL BORING
NS4-BH03	187,424.6 N 1,733,987.8 E	12.4 FT.	SOIL BORING
NS4-BH04	187,225.1 N 1,733,994.0 E	11.7 FT.	SOIL BORING
NS4-BH05	186,898.8 N 1,734,301.7 E	10.7 FT.	SOIL BORING
NS4-BH06	186,486.1 N 1,734,362.0 E	10.6 FT.	SOIL BORING
NS4-BH07	186,477.1 N 1,734,434.1 E	9.0 FT.	SOIL BORING
NS4-BH08	186,328.0 N 1,734,331.7 E	8.7 FT.	SOIL BORING

SITE 4 "DPDO STORAGE YARD"

STATION DESIGNATION	HORIZONTAL COORDINATE	ELEVATION	REMARKS
	SOIL SAMPLES		
NS4-SS01	188,123.4 N 1,733,151.6 E	7.0 FT.	SOIL SAMPLE
NS4-SS02	186,739.5 N 1,733,942.5 E	4.5 FT.	SOIL SAMPLE
NS4-SS03	186,158.4 N 1,734,164.5 E	4.5 FT.	SOIL SAMPLE

SITE 7 "SEWER PLANT"

STATION DESIGNATION	HORIZONTAL COORDINATE	ELEVATION	REMARKS
	MONITORING WELLS		
NS7-MW01	188,960.3 N 1,731,949.1 E	20.689 FT. 21.08 FT.	NORTH RIM P.V.C. NORTH RIM CASING

		21.08 FT.	SET LEAD & TACK
NS7-MW02	188,565.6 N 1,732,018.2 E	18.320 FT. 18.71 FT. 18.67 FT.	EAST RIM P.V.C. NORTH RIM CASING SET LEAD & TACK
NS7-MW03	188,701.0 N 1,731,552.5 E	17.322 FT. 17.51 FT. 17.47 FT.	NORTH RIM P.V.C. NORTH RIM CASING SET LEAD & TACK
	SOIL BORINGS		
NS7-BH01	188,861.4 N 1,731,894.8 E	19.8 FT.	SOIL BORING
NS7-BH02	188,818.4 N 1,731,729.2 E	18.4 FT.	SOIL BORING
NS7-BH03	188,576.3 N 1,731,960.7 E	17.9 FT.	SOIL BORING
NS7-BH04	188,753.2 N 1,731,948.7 E	19.5 FT.	SOIL BORING
NS7-BH05	188,714.5 N 1,732,155.1 E	19.3 FT.	SOIL BORING

SITE 8 "FIRE FIGHTER TRAINING FACILITY"

STATION DESIGNATION	HORIZONTAL COORDINATE	ELEVATION	REMARKS
	MONITORING WELLS		
NS8-MW01	185,449.6 N 1,732,964.1 E	12.195 FT. 12.72 FT. 12.74 FT.	NORTH RIM P.V.C. NORTH RIM CASING PK NAIL AT GRADE
NS8-MW02	185,645.0 N 1,732,828.3 E	12.055 FT. 12.60 FT. 12.58 FT.	NORTH RIM P.V.C. NORTH RIM CASING PK NAIL AT GRADE
NS8-MW03	185,424.0 N 1,732,784.7 E	11.940 FT. 12.55 FT. 12.53 FT.	NORTH RIM P.V.C. NORTH RIM CASING PK NAIL AT GRADE
NS8-MW04	185,556.8 N 1,732,733.3 E	11.875 FT. 12.64 FT. 12.66 FT.	NORTH RIM P.V.C. NORTH RIM CASING PK NAIL AT GRADE
NS8-MW05	185,706.6 N 1,732,608.6 E	12.145 FT. 12.72 FT. 12.73 FT.	NORTH RIM P.V.C. NORTH RIM CASING PK NAIL AT GRADE

NS8-MW06	186,083.6 N 1,732,417.6 E	11.675 FT. 12.15 FT. 12.11 FT.	NORTH RIM P.V.C. NORTH RIM CASING PK NAIL AT GRADE
NS8-MW07	185,990.0 N 1,732,527.4 E	12.065 FT. 12.68 FT. 12.63 FT.	NORTH RIM P.V.C. NORTH RIM CASING PK NAIL AT GRADE

SITE 8 "FIRE FIGHTER TRAINING FACILITY"

STATION DESIGNATION	HORIZONTAL COORDINATE	ELEVATION	REMARKS
	SOIL BORINGS		
NS8-BH01	186,159.6 N 1,732,447.6 E	12.3 FT.	SOIL BORING
NS8-BH02	186,105.6 N 1,732,491.6 E	12.4 FT.	SOIL BORING
NS8-BH03	186,106.8 N 1,732,367.2 E	12.1 FT.	SOIL BORING
NS8-BH04	186,057.8 N 1,732,401.7 E	12.1 FT.	SOIL BORING
NS8-BH05	186,234.4 N 1,732,481.3 E	12.5 FT.	SOIL BORING

MISCELLANIOUS MONITORING WELLS VARIOUS SITES

*	NS?-MW01	185,831.5 N 1,733,692.2 E	13.29 FT	M-1(242811-A1)
*	NS?-MW01	184,777.2 N 1,734,635.4 E	11.01 FT.	M-1(242811-A2)

NOTE: THE BASIS OF COORDINATES FOR THIS PROJECT IS DERIVED FROM STATION NUMBER 18 OF THE NAVAL PUBLIC WORKS DRAWING NUMBER 23567, DATED 8/29/78; I.E. N = 187,993.45 E = 1,732,424.52.

NOTE: THE BASIS OF COORDINATES ESTABLISHED HEREON IS DERIVED FROM A CALCULATED INVERSE FROM STATION NUMBER 18 TO STATION NUMBER 21 PER NAVAL PUBLIC WORKS DRAWING NUMBER 23567, DATED 8/29/78; I.E. AZIMUTH = 151°13'56".

NOTE: VERTICAL CONTROL AND ELEVATIONS DERIVED FROM NAVAL PUBLIC WORKS DRAWINGS 23476, DATED 8/11/78; I.E. STATION 27 ELEVATION = 11.662 FT.

NOTE: ORIENTATION OF COORDINATES IS BASED UPON MONUMENTS, AS FOUND ON 2/19/91.

NOTE: * = INDICATES REVISED HORIZONTAL COORDINATE POSITION. SEE CORRESPONDANCE DATED 14, MARCH 1991.

c:\bob\it9

PRECISION
SURVEY
AND
MAPPING

Morena Office Center

1094 Cudahy Place
Suite 222
San Diego, California
92110-3924

(619)275-4033

RECEIVED
APR 05 1991

April 3, 1991 File No. 91-1006

IT Corporation
312 Directors Drive
Knoxville, TN. 37923

Att: Dennis Lessig

Re: San Diego Naval Station (Sites 2,4,7 & 8)
RLT 90/113

Dear Mr. Lessig:

Enclosed please find the complete report of the information regarding the horizontal positions and elevations established on the monitoring wells, soil borings and soil samples at the above referenced sites. Please note that some of this information has previously been published and sent to Gillian Poulter at the project site for her immediate use.

I trust this information satisfies your needs. If you have any questions or comments please do not hesitate to call.

Sincerely,

PRECISION SURVEY AND MAPPING

Robert L. Meadows Jr., PLS

encl:

LICENSED LAND SURVEYOR
ROBERT L. MEADOWS, JR.
No. LS 6274
Exp. 9-30-94
STATE OF CALIFORNIA

c:\bob\it71

PRECISION
SURVEY
AND
MAPPING

Morena Office Center

1094 Cudahy Place
Suite 222
San Diego, California
92110-3924

(619)275-4033

APRIL 3, 1991 FILE NO. 91-1006

SAN DIEGO NAVAL STATION
IT CORPORATION
PROJECT RLT 90/113

PROJECT POSITIONING

SITE 2 "MOLE PIER"

STATION DESIGNATION	HORIZONTAL COORDINATE	ELEVATION	REMARKS
	MONITORING WELLS		
NS2-MW10	184,139.8 N 1,732,672.7 E	13.417 FT. 13.76 FT. 13.73 FT.	NORTH RIM P.V.C. NORTH RIM CASING PK NAIL AT GRADE
NS2-MW11	184,489.4 N 1,733,922.2 E	12.304 FT. 12.70 FT. 12.69 FT.	NORTH RIM P.V.C. NORTH RIM CASING PK NAIL AT GRADE
NS2-MW12	184,081.1 N 1,733,734.8 E	14.137 FT. 14.43 FT. 14.43 FT.	NORTH RIM P.V.C. NORTH RIM CASING PK NAIL AT GRADE
	SOIL BORINGS		
NS2-BH01	184,305.9 N 1,732,710.6 E	14.8 FT.	SOIL BORING
NS2-BH02	184,224.7 N 1,732,620.2 E	14.1 FT.	SOIL BORING
NS2-BH03	184,152.1 N 1,732,692.9 E	14.4 FT.	SOIL BORING
NS2-BH04	184,258.3 N 1,732,819.4 E	15.4 FT.	SOIL BORING
NS2-BH05	184,217.6 N 1,732,957.7 E	14.5 FT.	SOIL BORING
NS2-BH06	184,441.5 N	15.7 FT.	SOIL BORING

	1,733,077.8 E		
NS2-BH07	184,665.5 N 1,733,200.4 E	13.3 FT.	SOIL BORING
NS2-BH08	185,095.5 N 1,733,799.2 E	12.8 FT.	SOIL BORING
NS2-BH09	184,766.1 N 1,733,873.3 E	13.8 FT.	SOIL BORING

SITE 2 "MOLE PIER"

STATION DESIGNATION	HORIZONTAL COORDINATE	ELEVATION	REMARKS
	SOIL BORINGS		
NS2-BH10	184,662.1 N 1,733,864.3 E	13.3 FT.	SOIL BORING
NS2-BH11	184,541.8 N 1,733,547.7 E	15.1 FT.	SOIL BORING
NS2-BH12	184,360.6 N 1,733,339.2 E	15.5 FT.	SOIL BORING
NS2-BH13	184,423.5 N 1,733,673.5 E	14.9 FT.	SOIL BORING
NS2-BH14	184,391.0 N 1,733,923.5 E	12.4 FT.	SOIL BORING
NS2-BH15	184,258.0 N 1,733,929.5 E	12.8 FT.	SOIL BORING

SITE 4 "DPDO STORAGE YARD"

STATION DESIGNATION	HORIZONTAL COORDINATE	ELEVATION	REMARKS
	MONITORING WELLS		
NS4-MW01	187,391.5 N 1,733,694.9 E	12.865 FT. 13.21 FT. 13.15 FT.	NORTH RIM P.V.C. NORTH RIM CASING SET LEAD & TACK
NS4-MW02	186,769.6 N 1,734,219.6 E	11.700 FT. 11.90 FT. 11.86 FT.	N.E. RIM P.V.C. NORTH RIM CASING SET LEAD & TACK
NS4-MW03	186,210.4 N 1,734,203.6 E	9.727 FT. 9.94 FT. 9.87 FT.	SOUTH RIM P.V.C. NORTH RIM CASING SET LEAD & TACK

NS4-MW04	186,944.2 N 1,734,818.0 E	12.955 FT. 13.15 FT. 13.13 FT.	WEST RIM P.V.C. NORTH RIM CASING SET LEAD & TACK

SOIL BORINGS

NS4-BH01	187,691.6 N 1,733,565.1 E	13.3 FT.	SOIL BORING
NS4-BH02	187,706.4 N 1,733,691.7 E	15.3 FT.	SOIL BORING
NS4-BH03	187,424.1 N 1,733,994.3 E	12.4 FT.	SOIL BORING
NS4-BH04	187,224.7 N 1,734,000.2 E	11.7 FT.	SOIL BORING
NS4-BH05	186,897.9 N 1,734,307.4 E	10.7 FT.	SOIL BORING
NS4-BH06	186,485.1 N 1,734,367.1 E	10.6 FT.	SOIL BORING
NS4-BH07	186,476.0 N 1,734,439.2 E	9.0 FT.	SOIL BORING
NS4-BH08	186,327.0 N 1,734,336.6 E	8.7 FT.	SOIL BORING

SITE 4 "DPDO STORAGE YARD"

STATION DESIGNATION	HORIZONTAL COORDINATE	ELEVATION	REMARKS
	SOIL SAMPLES		
NS4-SS01	188,124.1 N 1,733,159.1 E	7.0 FT.	SOIL SAMPLE
NS4-SS02	186,739.1 N 1,733,948.0 E	4.5 FT.	SOIL SAMPLE
NS4-SS03	186,157.7 N 1,734,169.2 E	4.5 FT.	SOIL SAMPLE

SITE 7 "SEWER PLANT"

STATION DESIGNATION	HORIZONTAL COORDINATE	ELEVATION	REMARKS

MONITORING WELLS

NS7-MW01	188,962.8 N 1,731,957.8 E	20.689 FT. 21.08 FT. 21.08 FT.	NORTH RIM P.V.C. NORTH RIM CASING SET LEAD & TACK
NS7-MW02	188,568.0 N 1,732,026.4 E	18.320 FT. 18.71 FT. 18.67 FT.	EAST RIM P.V.C. NORTH RIM CASING SET LEAD & TACK
NS7-MW03	188,704.1 N 1,731,560.8 E	17.322 FT. 17.51 FT. 17.47 FT.	NORTH RIM P.V.C. NORTH RIM CASING SET LEAD & TACK

SOIL BORINGS

NS7-BH01	188,864.0 N 1,731,903.4 E	19.8 FT.	SOIL BORING
NS7-BH02	188,821.2 N 1,731,737.7 E	18.4 FT.	SOIL BORING
NS7-BH03	188,578.9 N 1,731,968.8 E	17.9 FT.	SOIL BORING
NS7-BH04	188,755.8 N 1,731,957.2 E	19.5 FT.	SOIL BORING
NS7-BH05	188,716.7 N 1,732,163.5 E	19.3 FT.	SOIL BORING

SITE 8 "FIRE FIGHTER TRAINING FACILITY"

STATION DESIGNATION	HORIZONTAL COORDINATE	ELEVATION	REMARKS
	MONITORING WELLS		
NS8-MW01	185,450.7 N 1,732,967.7 E	12.195 FT. 12.72 FT. 12.74 FT.	NORTH RIM P.V.C. NORTH RIM CASING PK NAIL AT GRADE
NS8-MW02	185,646.3 N 1,732,832.1 E	12.055 FT. 12.60 FT. 12.58 FT.	NORTH RIM P.V.C. NORTH RIM CASING PK NAIL AT GRADE
NS8-MW03	185,425.3 N 1,732,788.3 E	11.940 FT. 12.55 FT. 12.53 FT.	NORTH RIM P.V.C. NORTH RIM CASING PK NAIL AT GRADE
NS8-MW04	185,558.2 N 1,732,737.1 E	11.875 FT. 12.64 FT. 12.66 FT.	NORTH RIM P.V.C. NORTH RIM CASING PK NAIL AT GRADE
NS8-MW05	185,708.2 N	12.145 FT.	NORTH RIM P.V.C.

	1,732,612.6 E	12.72 FT.	NORTH RIM CASING
		12.73 FT.	PK NAIL AT GRADE
NS8-MW06	186,085.5 N	11.675 FT.	NORTH RIM P.V.C.
	1,732,422.1 E	12.15 FT.	NORTH RIM CASING
		12.11 FT.	PK NAIL AT GRADE
NS8-MW07	185,991.7 N	12.065 FT.	NORTH RIM P.V.C.
	1,732,531.8 E	12.68 FT.	NORTH RIM CASING
		12.63 FT.	PK NAIL AT GRADE

SITE 8 "FIRE FIGHTER TRAINING FACILITY"

STATION DESIGNATION	HORIZONTAL COORDINATE	ELEVATION	REMARKS
	SOIL BORINGS		
NS8-BH01	186,161.4 N 1,732,452.3 E	12.3 FT.	SOIL BORING
NS8-BH02	186,107.4 N 1,732,496.2 E	12.4 FT.	SOIL BORING
NS8-BH03	186,108.7 N 1,732,371.8 E	12.1 FT.	SOIL BORING
NS8-BH04	186,059.7 N 1,732,406.2 E	12.1 FT.	SOIL BORING
NS8-BH05	186,236.2 N 1,732,486.1 E	12.5 FT.	SOIL BORING

NOTE: THE BASIS OF COORDINATES FOR THIS PROJECT IS DERIVED FROM STATION NUMBER 26 OF THE NAVAL PUBLIC WORKS DRAWING NUMBER 23567, DATED 8/29/78; I.E. N = 182,224.97 E = 1,733,359.51.

NOTE: THE BASIS OF COORDINATES ESTABLISHED HEREON IS DERIVED FROM A CALCULATED INVERSE FROM STATION NUMBER 26 TO STATION NUMBER 25 PER NAVAL PUBLIC WORKS DRAWING NUMBER 23567, DATED 8/29/78; I.E. AZIMUTH = 353°52'43".

NOTE: VERTICAL CONTROL AND ELEVATIONS DERIVED FROM NAVAL PUBLIC WORKS DRAWINGS 23476, DATED 8/11/78; I.E. STATION 27 ELEVATION = 11.662 FT.

NOTE: ORIENTATION OF COORDINATES IS BASED UPON MONUMENTS AS FOUND AND IDENTIFIED ON 10/22/87.

C:BOB\IT7

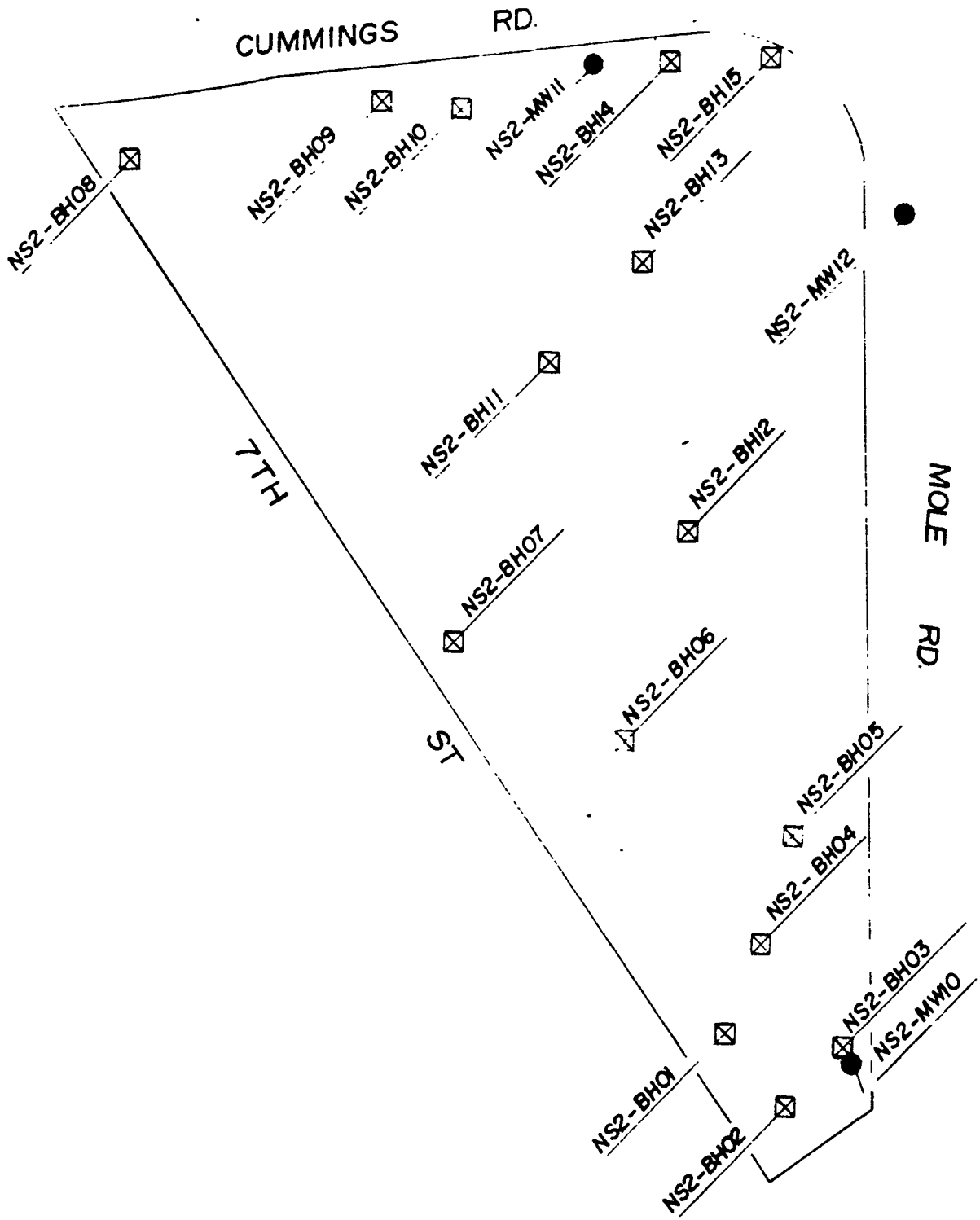

2 MOLE PIER

LEGEND

- ● MONITORING WELLS
- ⊠ BOREHOLES
- ▲ SEDIMENT SAMPLING LOCATION

4 DPDO STORAGE YARD

NS4-S5

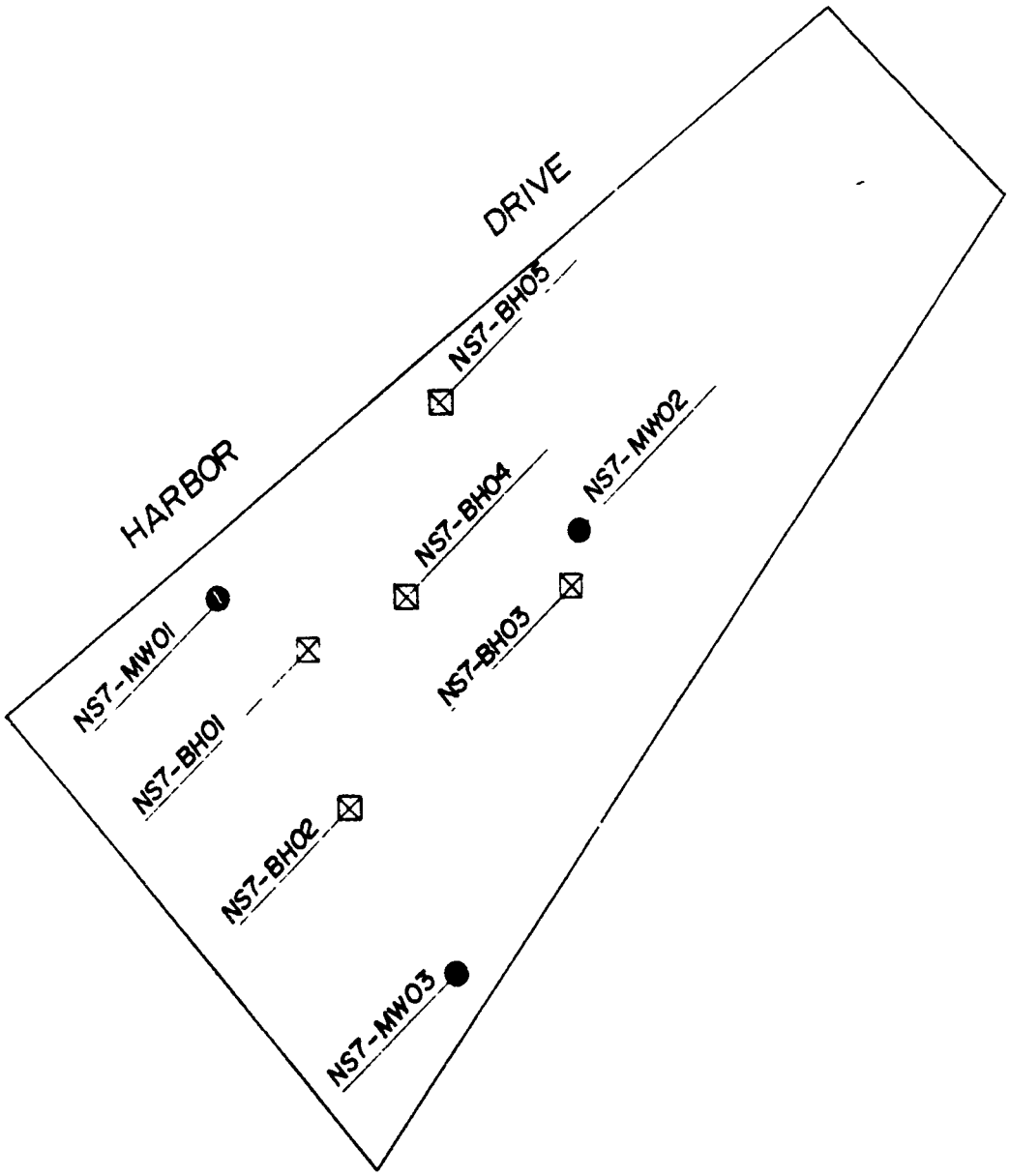

7 SEWER PLANT SITE

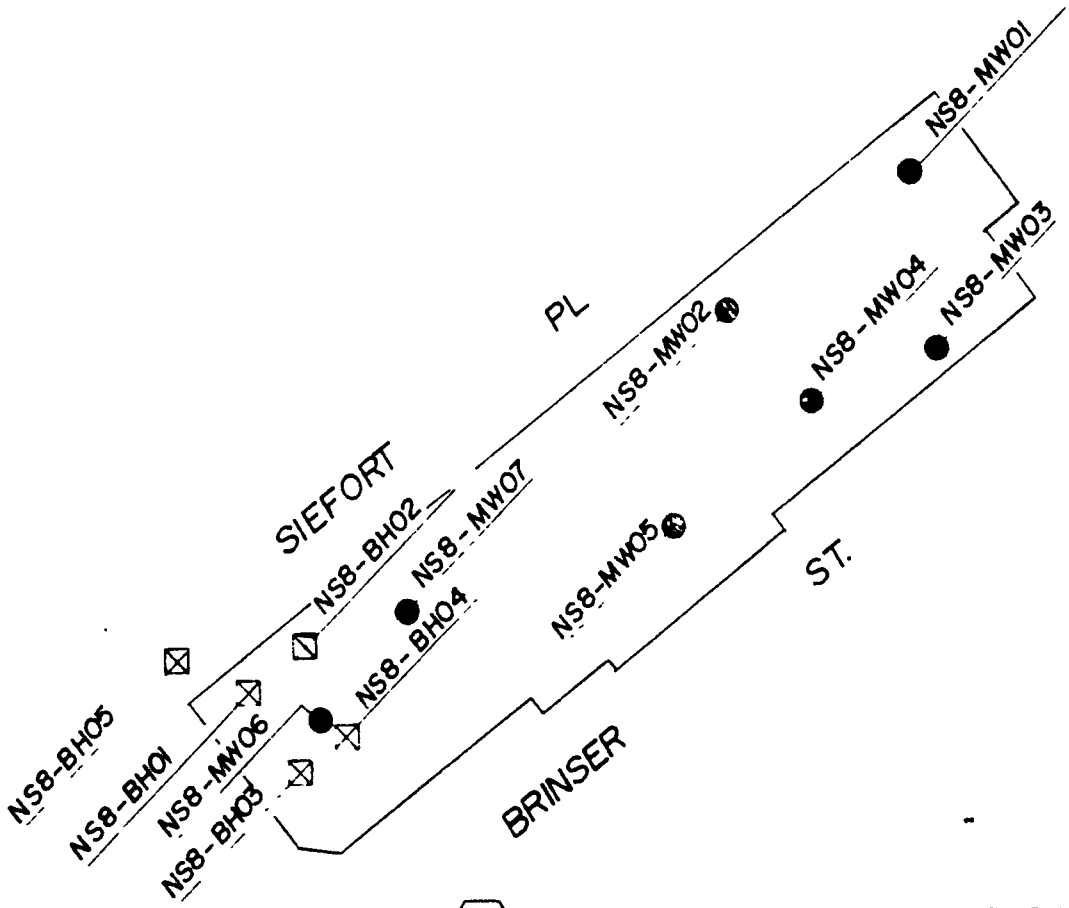

8 FIRE FIGHTER TRAINING FACILITY

T O P O G R A P

Graphic Scale 1 " = 500 '

500' 1000' 1500' 2000'

If sheet is less than 24" × 36" it is a reduced print scale reduced accordingly **APPROXIMATE**

Legal Description

E

L

E

D

Sheet 1 of 2

Job No. 91-1006

Revisions

Sym	Description	Drawn by	Date
	FINAL DRAFT	D. CAPTER	3-26-91

APPENDIX D

VOLATILE ORGANICS DATA	SAMPLE ID	NS2-BH2-SO2-15	NS2-BH4-SO1-5	NS2-BH4-SO2-10	NS2-BH8-SO3-15	NS2-BH15-SO1-5	NS2-MW10-SO3-15	NS2-MW12-SO1-5
CLIENT NAME - IT CORPORATION	MATRIX	SOLID	SOLID	SOLID	SOLID	SOLID	SOLID	SOLID
SITE - SAN DIEGO NAVSTA	DILUTION	125.00	1.00	125.00	125.00	5.00	125.00	1.00
PREPARATION DATE 25 JULY 91	BLANK ID	VBLK6	VBLK3	VBLK7	VBLK6A	VBLK4	VBLK7	VBLK5
FILE ID - VS2-791S	UNITS	ug/kg	ug/kg	ug/kg	ug/kg	ug/kg	ug/kg	ug/kg
	% SOLIDS	84	88	93	79	92	77	97
FILE PRINT DATE---------->	31-Jan-92							
acetone		1600 U	100 B	1344 U	2200 U	1100 BJ	1623 U	10 U
2-butanone (MEK)		1488 U	11 U	1344 U	1582 U	54 U	400 J	10 U
1,1,1-trichloroethane		744 U	6	672 U	791 U	27 U	812 U	5 U
trichloroethene (TCE)		744 U	6 U	170 J	791 U	27 U	812 U	5 U
toluene		4400 J	67	1500	791 U	27 U	812 U	5 U
ethyl benzene		744 U	6 U	450 J	791 U	27 U	710 J	5 U
total xylenes		690 J	6 U	970	791 U	27 U	812 U	5 U

VOLATILE ORGANICS DATA	SAMPLE ID	NS2-MW12-SO1-5FD	NS2-ER-2-4-91	NS2-ER-2-5-91	NS2-ER-2-6-91	NS2-ER-2-7-91	NS2-FB-2-5-91	NS2-FB-2-7-91	NS2-TB-2-4-9
CLIENT NAME - IT CORPORATION	MATRIX	SOLID	SOLID	SOLID	SOLID	SOLID	SOLID	SOLID	SOLID
SITE - SAN DIEGO NAVSTA	DILUTION	1.00	1.00	1.00	1.00	1.00	1.00	1.00	1.00
PREPARATION DATE 25 JULY 91	BLANK ID	VBLK5	VBLK1	VBLK3A	VBLK4	VBLK7A	VBLK1A	VBLK2	VBLK1
FILE ID - VS2-791S	UNITS	ug/kg	ug/kg	ug/kg	ug/kg	ug/kg	ug/kg	ug/kg	ug/kg
	% SOLIDS	95	100	100	100	100	100	100	100
FILE PRINT DATE---------->	31-Jan-92								
acetone		11 U	13 BJ	10 U	10 U	10 U	11 BJ	6 J	10
2-butanone (MEK)		11 U	10 U	3 J	10 U	10 U	10 U	10 U	10
1,1,1-trichloroethane		5 U	5 U	5 U	5 U	5 U	5 U	5 U	5
trichloroethene (TCE)		5 U	5 U	5 U	5 U	5 U	5 U	5 U	5
toluene		5 U	5 U	2 J	5 U	5 U	2 J	5 U	5
ethyl benzene		5 U	5 U	5 U	5 U	5 U	5 U	5 U	5
total xylenes		5 U	5 U	5 U	5 U	5 U	5 U	5 U	5

VOLATILE ORGANICS DATA	SAMPLE ID	1	NS2-TB-2-5-91	NS2-TB-2-6-91	NS2-TB-2-7-91	VBLK1	VBLK1A	VBLK1B	VBLK2	VBLK2A	VBLK3
CLIENT NAME - IT CORPORATION	MATRIX		SOLID	SOLID	SOLID	SOLID	SOLID	SOLID	SOLID	SOLID	SOLID
SITE - SAN DIEGO NAVSTA	DILUTION		1.00	1.00	1.00	1.00	1.00	1.00	1.00	1.00	1.00
PREPARATION DATE 25 JULY 91	BLANK ID		VBLK2A	VBLK1B	VBLK2	02/13/91	02/13/91	02/14/91	02/19/91	02/13/91	02/14/91
FILE ID - VS2-791S	UNITS		ug/kg	ug/kg	ug/kg	ug/kg	ug/kg	ug/kg	ug/kg	ug/kg	ug/kg
	% SOLIDS		100	100	100	100	100	100	100	100	100
FILE PRINT DATE---------->	31-Jan-92										
acetone		U	3 BJ	10 J	10 U	5 J	4 J	10 U	10 U	4 J	3 J
2-butanone (MEK)		U	10 U	10 U	10 U	10 U	10 U	10 U	10 U	10 U	10 U
1,1,1-trichloroethane		U	5 U	5 U	5 U	5 U	5 U	5 U	5 U	5 U	5 U
trichloroethene (TCE)		U	5 U	5 U	5 U	5 U	5 U	5 U	5 U	5 U	5 U
toluene		U	5 U	5 U	5 U	5 U	5 U	5 U	5 U	5 U	5 U
ethyl benzene		U	5 U	5 U	5 U	5 U	5 U	5 U	5 U	5 U	5 U
total xylenes		U	5 U	5 U	5 U	5 U	5 U	5 U	5 U	5 U	5 U

VOLATILE ORGANICS DATA	SAMPLE ID	VBLK3A	VBLK4	VBLK5	VBLK6	VBLK6A	VBLK7	VBLK7A
CLIENT NAME - IT CORPORATION	MATRIX	SOLID	SOLID	SOLID	SOLID	SOLID	SOLID	SOLID
SITE - SAN DIEGO NAVSTA	DILUTION	1.00	1.00	1.00	125.00	125.00	125.00	1.00
PREPARATION DATE 25 JULY 91	BLANK ID	02/14/91	02/15/91	02/21/91	02/15/91	02/16/91	02/16/91	02/19/91
FILE ID - VS2-791S	UNITS	ug/kg	ug/kg	ug/kg	ug/kg	ug/kg	ug/kg	ug/kg
	% SOLIDS	100	100	100	100	100	100	100
FILE PRINT DATE---------->	31-Jan-92							
acetone		10 U	4 J	10 U	710 J	440 J	440 J	10 U
2-butanone (MEK)		10 U	10 U	10 U	1250 U	1250 U	1250 U	10 U
1,1,1-trichloroethane		5 U	5 U	5 U	625 U	625 U	625 U	5 U
trichloroethene (TCE)		5 U	5 U	5 U	625 U	625 U	625 U	5 U
toluene		5 U	5 U	5 U	625 U	625 U	625 U	5 U
ethyl benzene		5 U	5 U	5 U	625 U	625 U	625 U	5 U
total xylenes		5 U	5 U	5 U	625 U	625 U	625 U	5 U

VOLATILE ORGANICS DATA	SAMPLE ID	NS2-BH2-SO2-15	NS2-BH4-SO1-5	NS2-BH4-SO2-10	NS2-BH8-SO3-15	NS2-BH15-SO1-5	NS2-MW10-SO3-15	NS2-MW12-SO1-5
CLIENT NAME - IT CORPORATION	MATRIX	SOLID	SOLID	SOLID	SOLID	SOLID	SOLID	SOLID
SITE - SAN DIEGO NAVSTA	DILUTION	125.00	1.00	125.00	125.00	5.00	125.00	1.00
PREPARATION DATE 25 JULY 91	BLANK ID	VBLK6	VBLK3	VBLK7	VBLK6A	VBLK4	VBLK7	VBLK5
FILE ID - VS2-791	UNITS	ug/kg	ug/kg	ug/kg	ug/kg	ug/kg	ug/kg	ug/kg
	% SOLIDS	84	88	93	79	92	77	97
FILE PRINT DATE---------->	31-Jan-92							
chloromethane		1488 U	11 U	1344 U	1582 U	54 U	1623 U	10 U
bromomethane		1488 U	11 U	1344 U	1582 U	54 U	1623 U	10 U
vinyl chloride		1488 U	11 U	1344 U	1582 U	54 U	1623 U	10 U
chloroethane		1488 U	11 U	1344 U	1582 U	54 U	1623 U	10 U
methylene chloride		1100 U	9 U	720 U	990 U	41 U	970 U	12 U
acetone		1600 U	100 B	1344 U	2200 U	1100 BJ	1623 U	10 U
carbon disulfide		744 U	6 U	672 U	791 U	27 U	812 U	5 U
1,1-dichloroethene		744 U	6 U	672 U	791 U	27 U	812 U	5 U
1,1-dichloroethane		744 U	6 U	672 U	791 U	27 U	812 U	5 U
1,2-dichloroethene (total)		744 U	6 U	672 U	791 U	27 U	812 U	5 U
chloroform		744 U	6 U	672 U	791 U	27 U	812 U	5 U
1,2-dichloroethane		744 U	6 U	672 U	791 U	27 U	812 U	5 U
2-butanone (MEK)		1488 U	11 U	1344 U	1582 U	54 U	400 J	10 U
1,1,1-trichloroethane		744 U	6	672 U	791 U	27 U	812 U	5 U
carbon tetrachloride		744 U	6 U	672 U	791 U	27 U	812 U	5 U
vinyl acetate		1488 U	11 U	1344 U	1582 U	54 U	1623 U	10 U
bromodichloromethane		744 U	6 U	672 U	791 U	27 U	812 U	5 U
1,2-dichloropropane		744 U	6 U	672 U	791 U	27 U	812 U	5 U
cis-1,3-dichloropropene		744 U	6 U	672 U	791 U	27 U	812 U	5 U
trichloroethene (TCE)		744 U	6 U	170 J	791 U	27 U	812 U	5 U
dibromochloromethane		744 U	6 U	672 U	791 U	27 U	812 U	5 U
1,1,2-trichloroethane		744 U	6 U	672 U	791 U	27 U	812 U	5 U
benzene		744 U	6 U	672 U	791 U	27 U	812 U	5 U
trans-1,3-dichloropropene		744 U	6 U	672 U	791 U	27 U	812 U	5 U
bromoform		744 U	6 U	672 U	791 U	27 U	812 U	5 U
4-methyl-2-pentanone		1488 U	11 U	1344 U	1582 U	54 U	1623 U	10 U
2-hexanone (MBK)		1488 U	11 U	1344 U	1582 U	54 U	1623 U	10 U
tetrachloroethene (PCE)		744 U	6 U	672 U	791 U	27 U	812 U	5 U
1,1,2,2-tetrachloroethane		744 U	6 U	672 U	791 U	27 U	812 U	5 U
toluene		4400 J	67	1500	791 U	27 U	812 U	5 U
chlorobenzene		744 U	6 U	672 U	791 U	27 U	812 U	5 U
ethyl benzene		744 U	6 U	450 J	791 U	27 U	710 J	5 U
styrene		744 U	6 U	672 U	791 U	27 U	812 U	5 U
total xylenes		690 J	6 U	970	791 U	27 U	812 U	5 U

VOLATILE ORGANICS DATA	SAMPLE ID	NS2-MW12-SO1-5FD	NS2-ER-2-4-91	NS2-ER-2-5-91	NS2-ER-2-6-91	NS2-ER-2-7-91	NS2-FB-2-5-91	NS2-FB-2-7-91	NS2-TB-2-4-9
CLIENT NAME - IT CORPORATION	MATRIX	SOLID	SOLID	SOLID	SOLID	SOLID	SOLID	SOLID	SOLID
SITE - SAN DIEGO NAVSTA	DILUTION	1.00	1.00	1.00	1.00	1.00	1.00	1.00	1.00
PREPARATION DATE 25 JULY 91	BLANK ID	VBLK5	VBLK1	VBLK3A	VBLK4	VBLK7A	VBLK1A	VBLK2	VBLK1
FILE ID - VS2-791	UNITS	ug/kg	ug/kg	ug/kg	ug/kg	ug/kg	ug/kg	ug/kg	ug/kg
	% SOLIDS	95	100	100	100	100	100	100	100
FILE PRINT DATE---------->	31-Jan-92								
chloromethane		11 U	10 U	10 U	10 U	10 U	10 U	10 U	10
bromomethane		11 U	10 U	10 U	10 U	10 U	10 U	10 U	10
vinyl chloride		11 U	10 U	10 U	10 U	10 U	10 U	10 U	10
chloroethane		11 U	10 U	10 U	10 U	10 U	10 U	10 U	10
methylene chloride		16 U	3 BJ	2 BJ	1 BJ	2 BJ	2 BJ	2 BJ	3
acetone		11 U	13 BJ	10 U	10 U	10 U	11 BJ	6 J	10
carbon disulfide		5 U	5 U	5 U	5 U	5 U	5 U	5 U	5
1,1-dichloroethene		5 U	5 U	5 U	5 U	5 U	5 U	5 U	5
1,1-dichloroethane		5 U	5 U	5 U	5 U	5 U	5 U	5 U	5
1,2-dichloroethene (total)		5 U	5 U	5 U	5 U	5 U	5 U	5 U	5
chloroform		5 U	3 J	15	17	9	3 J	2 J	5
1,2-dichloroethane		5 U	5 U	5 U	5 U	5 U	5 U	5 U	5
2-butanone (MEK)		11 U	10 U	3 J	10 U	10 U	10 U	10 U	10
1,1,1-trichloroethane		5 U	5 U	5 U	5 U	5 U	5 U	5 U	5
carbon tetrachloride		5 U	5 U	5 U	5 U	5 U	5 U	5 U	5
vinyl acetate		11 U	10 U	10 U	10 U	10 U	10 U	10 U	10
bromodichloromethane		5 U	6	15	15	11	5	4 J	5
1,2-dichloropropane		5 U	5 U	5 U	5 U	5 U	5 U	5 U	5
cis-1,3-dichloropropene		5 U	5 U	5 U	5 U	5 U	5 U	5 U	5
trichloroethene (TCE)		5 U	5 U	5 U	5 U	5 U	5 U	5 U	5
dibromochloromethane		5 U	7	16	16	14	6	5	5
1,1,2-trichloroethane		5 U	5 U	5 U	5 U	5 U	5 U	5 U	5
benzene		5 U	5 U	5 U	5 U	5 U	5 U	5 U	5
trans-1,3-dichloropropene		5 U	5 U	5 U	5 U	5 U	5 U	5 U	5
bromoform		5 U	2 J	5	5	5	2 J	2 J	5
4-methyl-2-pentanone		11 U	10 U	10 U	10 U	10 U	10 U	10 U	10
2-hexanone (MBK)		11 U	10 U	10 U	10 U	10 U	10 U	10 U	10
tetrachloroethene (PCE)		5 U	5 U	5 U	5 U	5 U	5 U	5 U	5
1,1,2,2-tetrachloroethane		5 U	5 U	5 U	5 U	5 U	5 U	5 U	5
toluene		5 U	5 U	2 J	5 U	5 U	2 J	5 U	5
chlorobenzene		5 U	5 U	5 U	5 U	5 U	5 U	5 U	5
ethyl benzene		5 U	5 U	5 U	5 U	5 U	5 U	5 U	5
styrene		5 U	5 U	5 U	5 U	5 U	5 U	5 U	5
total xylenes		5 U	5 U	5 U	5 U	5 U	5 U	5 U	5

VOLATILE ORGANICS DATA	SAMPLE ID	1	NS2-TB-2-5-91	NS2-TB-2-6-91	NS2-TB-2-7-91	VBLK1	VBLK1A	VBLK1B	VBLK2	VBLK2A	VBLK3
CLIENT NAME - IT CORPORATION	MATRIX		SOLID	SOLID	SOLID	SOLID	SOLID	SOLID	SOLID	SOLID	SOLID
SITE - SAN DIEGO NAVSTA	DILUTION		1.00	1.00	1.00	1.00	1.00	1.00	1.00	1.00	1.00
PREPARATION DATE 25 JULY 91	BLANK ID		VBLK2A	VBLK1B	VBLK2	02/13/91	02/13/91	02/14/91	02/19/91	02/13/91	02/14/91
FILE ID - VS2-791	UNITS		ug/kg	ug/kg	ug/kg	ug/kg	ug/kg	ug/kg	ug/kg	ug/kg	ug/kg
	% SOLIDS		100	100	100	100	100	100	100	100	100
FILE PRINT DATE---------->	31-Jan-92										
chloromethane		U	10 U	10 U	10 U	10 U	10 U	10 U	10 U	10 U	10 U
bromomethane		U	10 U	10 U	10 U	10 U	10 U	10 U	10 U	10 U	10 U
vinyl chloride		U	10 U	10 U	10 U	10 U	10 U	10 U	10 U	10 U	10 U
chloroethane		U	10 U	10 U	10 U	10 U	10 U	10 U	10 U	10 U	10 U
methylene chloride		BJ	4 BJ	3 BJ	2 BJ	7	7	3 J	11	7	8
acetone		U	3 BJ	10 J	10 U	5 J	4 J	10 U	10 U	4 J	3 J
carbon disulfide		U	5 U	5 U	5 U	5 U	5 U	5 U	5 U	5 U	5 U
1,1-dichloroethene		U	5 U	5 U	5 U	5 U	5 U	5 U	5 U	5 U	5 U
1,1-dichloroethane		U	5 U	5 U	5 U	5 U	5 U	5 U	5 U	5 U	5 U
1,2-dichloroethene (total)		U	5 U	5 U	5 U	5 U	5 U	5 U	5 U	5 U	5 U
chloroform		U	5 U	5 U	5 U	5 U	5 U	5 U	5 U	5 U	5 U
1,2-dichloroethane		U	5 U	5 U	5 U	5 U	5 U	5 U	5 U	5 U	5 U
2-butanone (MEK)		U	10 U	10 U	10 U	10 U	10 U	10 U	10 U	10 U	10 U
1,1,1-trichloroethane		U	5 U	5 U	5 U	5 U	5 U	5 U	5 U	5 U	5 U
carbon tetrachloride		U	5 U	5 U	5 U	5 U	5 U	5 U	5 U	5 U	5 U
vinyl acetate		U	10 U	10 U	10 U	10 U	10 U	10 U	10 U	10 U	10 U
bromodichloromethane		U	5 U	5 U	5 U	5 U	5 U	5 U	5 U	5 U	5 U
1,2-dichloropropane		U	5 U	5 U	5 U	5 U	5 U	5 U	5 U	5 U	5 U
cis-1,3-dichloropropene		U	5 U	5 U	5 U	5 U	5 U	5 U	5 U	5 U	5 U
trichloroethene (TCE)		U	5 U	5 U	5 U	5 U	5 U	5 U	5 U	5 U	5 U
dibromochloromethane		U	5 U	5 U	5 U	5 U	5 U	5 U	5 U	5 U	5 U
1,1,2-trichloroethane		U	5 U	5 U	5 U	5 U	5 U	5 U	5 U	5 U	5 U
benzene		U	5 U	5 U	5 U	5 U	5 U	5 U	5 U	5 U	5 U
trans-1,3-dichloropropene		U	5 U	5 U	5 U	5 U	5 U	5 U	5 U	5 U	5 U
bromoform		U	5 U	5 U	5 U	5 U	5 U	5 U	5 U	5 U	5 U
4-methyl-2-pentanone		U	10 U	10 U	10 U	10 U	10 U	10 U	1 J	10 U	10 U
2-hexanone (MBK)		U	10 U	10 U	10 U	10 U	10 U	10 U	10 U	10 U	10 U
tetrachloroethene (PCE)		U	5 U	5 U	5 U	5 U	5 U	5 U	5 U	5 U	5 U
1,1,2,2-tetrachloroethane		U	5 U	5 U	5 U	5 U	5 U	5 U	5 U	5 U	5 U
toluene		U	5 U	5 U	5 U	5 U	5 U	5 U	5 U	5 U	5 U
chlorobenzene		U	5 U	5 U	5 U	5 U	5 U	5 U	5 U	5 U	5 U
ethyl benzene		U	5 U	5 U	5 U	5 U	5 U	5 U	5 U	5 U	5 U
styrene		U	5 U	5 U	5 U	5 U	5 U	5 U	5 U	5 U	5 U
total xylenes		U	5 U	5 U	5 U	5 U	5 U	5 U	5 U	5 U	5 U

VOLATILE ORGANICS DATA	SAMPLE ID	VBLK3A	VBLK4	VBLK5	VBLK6	VBLK6A	VBLK7	VBLK7A
CLIENT NAME - IT CORPORATION	MATRIX	SOLID	SOLID	SOLID	SOLID	SOLID	SOLID	SOLID
SITE - SAN DIEGO NAVSTA	DILUTION	1.00	1.00	1.00	125.00	125.00	125.00	1.00
PREPARATION DATE 25 JULY 91	BLANK ID	02/14/91	02/15/91	02/21/91	02/15/91	02/16/91	02/16/91	02/19/91
FILE ID - VS2-791	UNITS	ug/kg	ug/kg	ug/kg	ug/kg	ug/kg	ug/kg	ug/kg
	% SOLIDS	100	100	100	100	100	100	100
FILE PRINT DATE---------->	31-Jan-92							
chloromethane		10 U	10 U	10 U	1250 U	1250 U	1250 U	10 U
bromomethane		10 U	10 U	10 U	1250 U	1250 U	1250 U	10 U
vinyl chloride		10 U	10 U	10 U	1250 U	1250 U	1250 U	10 U
chloroethane		10 U	10 U	10 U	1250 U	1250 U	1250 U	10 U
methylene chloride		5	10	6	540 J	780	780	11
acetone		10 U	4 J	10 U	710 J	440 J	440 J	10 U
carbon disulfide		5 U	5 U	5 U	625 U	625 U	625 U	5 U
1,1-dichloroethene		5 U	5 U	5 U	625 U	625 U	625 U	5 U
1,1-dichloroethane		5 U	5 U	5 U	625 U	625 U	625 U	5 U
1,2-dichloroethene (total)		5 U	5 U	5 U	625 U	625 U	625 U	5 U
chloroform		5 U	5 U	5 U	625 U	625 U	625 U	5 U
1,2-dichloroethane		5 U	5 U	5 U	625 U	625 U	625 U	5 U
2-butanone (MEK)		10 U	10 U	10 U	1250 U	1250 U	1250 U	10 U
1,1,1-trichloroethane		5 U	5 U	5 U	625 U	625 U	625 U	5 U
carbon tetrachloride		5 U	5 U	5 U	625 U	625 U	625 U	5 U
vinyl acetate		10 U	10 U	10 U	1250 U	1250 U	1250 U	10 U
bromodichloromethane		5 U	5 U	5 U	625 U	625 U	625 U	5 U
1,2-dichloropropane		5 U	5 U	5 U	625 U	625 U	625 U	5 U
cis-1,3-dichloropropene		5 U	5 U	5 U	625 U	625 U	625 U	5 U
trichloroethene (TCE)		5 U	5 U	5 U	625 U	625 U	625 U	5 U
dibromochloromethane		5 U	5 U	5 U	625 U	625 U	625 U	5 U
1,1,2-trichloroethane		5 U	5 U	5 U	625 U	625 U	625 U	5 U
benzene		5 U	5 U	5 U	625 U	625 U	625 U	5 U
trans-1,3-dichloropropene		5 U	5 U	5 U	625 U	625 U	625 U	5 U
bromoform		5 U	5 U	5 U	625 U	625 U	625 U	5 U
4-methyl-2-pentanone		10 U	10 U	10 U	1250 U	1250 U	1250 U	1 J
2-hexanone (MBK)		10 U	10 U	10 U	1250 U	1250 U	1250 U	10 U
tetrachloroethene (PCE)		5 U	5 U	5 U	625 U	625 U	625 U	5 U
1,1,2,2-tetrachloroethane		5 U	5 U	5 U	625 U	625 U	625 U	5 U
toluene		5 U	5 U	5 U	625 U	625 U	625 U	5 U
chlorobenzene		5 U	5 U	5 U	625 U	625 U	625 U	5 U
ethyl benzene		5 U	5 U	5 U	625 U	625 U	625 U	5 U
styrene		5 U	5 U	5 U	625 U	625 U	625 U	5 U
total xylenes		5 U	5 U	5 U	625 U	625 U	625 U	5 U

VOLATILE ORGANICS DATA	SAMPLE ID	NS2-MW5-GW1
CLIENT - IT CORPORATION	MATRIX	WATER
SITE - SAN DIEGO NAVSTA	DILUTION	1.00
PREPARATION DATE 25 JULY 91	BLANK ID	VBLK7
FILE ID - V2-791S	UNITS	ug/L
FILE PRINT DATE------->	31-Jan-92	
toluene		2 J

VOLATILE ORGANICS DATA	SAMPLE ID	NS2-MW5-GW1		NS2-ER-2-15-91		VBLK7	
CLIENT - IT CORPORATION	MATRIX	WATER		WATER		WATER	
SITE - SAN DIEGO NAVSTA	DILUTION	1.00		1.00		1.00	
PREPARATION DATE 25 JULY 91	BLANK ID	VBLK7		VBLK7		02/26/91	
FILE ID - V2-791	UNITS	ug/L		ug/L		ug/L	
FILE PRINT DATE------->	31-Jan-92						
chloromethane		10	U	10	U	10	U
bromomethane		10	U	10	U	10	U
vinyl chloride		10	U	10	U	10	U
chloroethane		10	U	10	U	10	U
methylene chloride		5	U	4	BJ	10	
acetone		10	U	10	U	10	U
carbon disulfide		5	U	5	U	5	U
1,1-dichloroethene		5	U	5	U	5	U
1,1-dichloroethane		5	U	5	U	5	U
1,2-dichloroethene (total)		5	U	5	U	5	U
chloroform		5	U	16		5	U
1,2-dichloroethane		5	U	5	U	5	U
2-butanone		10	U	10	U	10	U
1,1,1-trichloroethane		5	U	5	U	5	U
carbon tetrachloride		5	U	5	U	5	U
vinyl acetate		10	U	10	U	10	U
bromodichloromethane		5	U	7		5	U
1,2-dichloropropane		5	U	5	U	5	U
cis-1,3-dichloropropene		5	U	5	U	5	U
trichloroethene		5	U	5	U	5	U
dibromochloromethane		5	U	5	U	5	U
1,1,2-trichloroethane		5	U	5	U	5	U
benzene		5	U	5	U	5	U
trans-1,3-dichloropropene		5	U	5	U	5	U
bromoform		5	U	2	J	5	U
4-methyl-2-pentanone		10	U	10	U	10	U
2-hexanone		10	U	10	U	10	U
tetrachloroethene		5	U	5	U	5	U
1,1,2,2-tetrachloroethane		5	U	5	U	5	U
toluene		2	J	2	J	5	U
chlorobenzene		5	U	5	U	5	U
ethyl benzene		5	U	5	U	5	U
styrene		5	U	5	U	5	U
total xylenes		5	U	5	U	5	U

SEMIVOLATILE ORGANICS DATA
CLIENT - IT CORPORATION
SITE NAME - SAN DIEGO NAVSTA
PREPARATION DATE - 26 JULY 91
FILE ID - SVS2791S
FILE PRINT DATE ------->

SAMPLE ID	NS2-BH2-SO2-15		NS2-BH2-SO3-15FD		NS2-BH4-SO1-5		NS2-BH4-SO2-10		NS2-BH8-SO3-15		NS2-BH15-SO1-5		NS2-MW10-SO3-15	
MATRIX	SOLID		SOLID		SOLID		SOLID		SOLID		SOLID		SOLID	
DILUTION	30.00		20.00		3.00		20.00		1.00		1.00		60.00	
BLANK ID	SBLK3		SBLK3		SBLK2		SBLK2		SBLK1		SBLK1		SBLK4	
UNITS	ug/kg		ug/kg		ug/kg		ug/kg		ug/kg		ug/kg		ug/kg	
% SOLIDS	84		85		86		93		83		94		77	
31-Jan-92														
phenol	11786	UR	7765	UR	1151	UR	7097	UJ	180	J	351	U	25714	UR
1,2-dichlorobenzene	11786	U	870	J	1151	U	7097	UJ	398	U	351	U	25714	UR
2-methylphenol	11786	UR	7765	UR	1151	UR	7097	UJ	150	J	351	U	25714	UR
4-methylphenol	11786	UR	7765	UR	1151	UR	7097	UJ	200	J	351	U	25714	UR
naphthalene	6100	J	5700	J	1151	U	3400	J	2000		351	U	25000	J
2-methylnaphthalene	18000		15000		1151	U	11000	J	2900		351	U	67000	J
acenaphthene	11786	U	7765	U	720	J	7097	UJ	398	U	351	U	25714	UR
dibenzofuran	11786	U	7765	U	460	J	7097	UJ	398	U	351	U	25714	UR
fluorene	2800	J	2400	J	970	J	7097	UJ	398	U	351	U	7400	J
phenanthrene	4600	J	3600	J	13000		3300	J	398	U	54	J	12000	J
anthracene	11786	U	7765	U	2400		7097	UJ	398	U	351	U	25714	UR
fluoranthene	11786	U	1000	J	15000		7097	UJ	398	U	150	J	25714	UR
pyrene	11786	U	1000	J	11000		1500	J	398	U	140	J	25714	UR
benzo(a)anthracene	11786	U	7765	U	5600		7097	UJ	398	U	351	U	25714	UR
chrysene	11786	U	7765	U	5600		7097	UJ	398	U	110	J	25714	UR
bis(2-ethylhexyl)phthalate	11786	U	7765	U	1151	U	7097	UJ	96	J	220	J	25714	UR
benzo(b)fluoranthene	11786	U	7765	U	3100		7097	UJ	398	U	82	J	25714	UR
benzo(k)fluoranthene	11786	U	7765	U	4300		7097	UJ	398	U	120	J	25714	UR
benzo(a)pyrene	11786	U	7765	U	3100		7097	UJ	398	U	351	U	25714	UR
indeno(1,2,3-cd)pyrene	11786	U	7765	U	1300		7097	UJ	398	U	351	U	25714	UR
benzo(g,h,i,)perylene	11786	U	7765	U	1500		7097	UJ	398	U	351	U	25714	UR

SEMIVOLATILE ORGANICS DATA	SAMPLE ID	NS2-MW12-SO1-5	NS2-MW12-SO1-15FD	SBLK1	SBLK1A	SBLK2	SBLK2A	SBLK3	SBLK4
CLIENT - IT CORPORATION	MATRIX	SOLID	SOLID	SOLID	SOLID	SOLID	SOLID	SOLID	SOLID
SITE NAME - SAN DIEGO NAVSTA	DILUTION	1.00	1.00	1.00	1.00	1.00	1.00	1.00	1.00
PREPARATION DATE - 26 JULY 91	BLANK ID	SBLK2A	SBLK1A	03/11/91	03/08/91	03/07/91	03/14/91	03/09/91	03/25/91
FILE ID - SVS2791S	UNITS	ug/kg	ug/kg	ug/kg	ug/kg	ug/kg	ug/kg	ug/kg	ug/kg
	% SOLIDS	97	95	100	100	100	100	100	100
FILE PRINT DATE ------>	31-Jan-92								
phenol		340 UR	347 U	330 U	330 U	330 U	330 U	330 U	330 U
1,2-dichlorobenzene		340 UR	347 U	330 U	330 U	330 U	330 U	330 U	330 U
2-methylphenol		340 UR	347 U	330 U	330 U	330 U	330 U	330 U	330 U
4-methylphenol		340 UR	347 U	330 U	330 U	330 U	330 U	330 U	330 U
naphthalene		340 UR	347 U	330 U	330 U	330 U	330 U	330 U	330 U
2-methylnaphthalene		340 UR	347 U	330 U	330 U	330 U	330 U	330 U	330 U
acenaphthene		340 UR	347 U	330 U	330 U	330 U	330 U	330 U	330 U
dibenzofuran		340 UR	347 U	330 U	330 U	330 U	330 U	330 U	330 U
fluorene		340 UR	347 U	330 U	330 U	330 U	330 U	330 U	330 U
phenanthrene		340 UR	310 J	330 U	330 U	330 U	330 U	330 U	330 U
anthracene		340 UR	67 J	330 U	330 U	330 U	330 U	330 U	330 U
fluoranthene		340 UR	960	330 U	330 U	330 U	330 U	330 U	330 U
pyrene		340 UR	980	330 U	330 U	330 U	330 U	330 U	330 U
benzo(a)anthracene		340 UR	350	330 U	330 U	330 U	330 U	330 U	330 U
chrysene		340 UR	540	330 U	330 U	330 U	330 U	330 U	330 U
bis(2-ethylhexyl)phthalate		340 UR	347 U	330 U	330 U	330 U	330 U	330 U	330 U
benzo(b)fluoranthene		340 UR	440	330 U	330 U	330 U	330 U	330 U	330 U
benzo(k)fluoranthene		340 UR	390	330 U	330 U	330 U	330 U	330 U	330 U
benzo(a)pyrene		340 UR	280 J	330 U	330 U	330 U	330 U	330 U	330 U
indeno(1,2,3-cd)pyrene		340 UR	220 J	330 U	330 U	330 U	330 U	330 U	330 U
benzo(g,h,i,)perylene		340 UR	260 J	330 U	330 U	330 U	330 U	330 U	330 U

SEMIVOLATILE ORGANICS DATA	SAMPLE ID	NS2-BH2-SO2-15	NS2-BH2-SO3-15FD	NS2-BH4-SO1-5	NS2-BH4-SO2-10	NS2-BH8-SO3-15	NS2-BH15-SO1-5	NS2-MW10-SO3-15
CLIENT - IT CORPORATION	MATRIX	SOLID	SOLID	SOLID	SOLID	SOLID	SOLID	SOLID
SITE NAME - SAN DIEGO NAVSTA	DILUTION	30.00	20.00	3.00	20.00	1.00	1.00	60.00
PREPARATION DATE - 26 JULY 91	BLANK ID	SBLK3	SBLK3	SBLK2	SBLK2	SBLK1	SBLK1	SBLK4
FILE ID - SVS2-791	UNITS	ug/kg	ug/kg	ug/kg	ug/kg	ug/kg	ug/kg	ug/kg
	% SOLIDS	84	85	86	93	83	94	77
FILE PRINT DATE ------>	31-Jan-92							
phenol		11786 UR	7765 UR	1151 UR	7097 UJ	180 J	351 U	25714 UR
bis(2-chloroethyl)ether		11786 U	7765 U	1151 U	7097 UJ	398 U	351 U	25714 UR
2-chlorophenol		11786 UR	7765 UR	1151 UR	7097 UJ	398 U	351 U	25714 UR
1,3-dichlorobenzene		11786 U	7765 U	1151 U	7097 UJ	398 U	351 U	25714 UR
1,4-dichlorobenzene		11786 U	7765 U	1151 U	7097 UJ	398 U	351 U	25714 UR
benzyl alcohol		11786 U	7765 U	1151 U	7097 UJ	398 U	351 U	25714 UR
1,2-dichlorobenzene		11786 U	870 J	1151 U	7097 UJ	398 U	351 U	25714 UR
2-methylphenol		11786 UR	7765 UR	1151 UR	7097 UJ	150 J	351 U	25714 UR
bis(2-chloroisopropyl)ether		11786 U	7765 U	1151 U	7097 UJ	398 U	351 U	25714 UR
4-methylphenol		11786 UR	7765 UR	1151 UR	7097 UJ	200 J	351 U	25714 UR
N-nitrosodipropylamine		11786 U	7765 U	1151 U	7097 UJ	398 U	351 U	25714 UR
hexachloroethane		11786 U	7765 U	1151 U	7097 UJ	398 U	351 U	25714 UR
nitrobenzene		11786 U	7765 U	1151 U	7097 UJ	398 U	351 U	25714 UR
isophorone		11786 U	7765 U	1151 U	7097 UJ	398 U	351 U	25714 UR
2-nitrophenol		11786 UR	7765 UR	1151 UR	7097 UJ	398 U	351 U	25714 UR
2,4-dimethylphenol		11786 UR	7765 UR	1151 UR	7097 UJ	398 U	351 U	25714 UR
benzoic acid		57143 UR	37647 UR	5581 UR	34409 UJ	1928 U	1702 U	124675 UR
bis(2-chloroethoxy)methane		11786 U	7765 U	1151 U	7097 UJ	398 U	351 U	25714 UR
2,4-dichlorophenol		11786 UR	7765 UR	1151 UR	7097 UJ	398 U	351 U	25714 UR
1,2,4-trichlorobenzene		11786 U	7765 U	1151 U	7097 UJ	398 U	351 U	25714 UR
naphthalene		6100 J	5700 J	1151 U	3400 J	2000	351 U	25000 J
4-chloroaniline		11786 U	7765 U	1151 U	7097 UJ	398 U	351 U	25714 UR
hexacholorobutadiene		11786 U	7765 U	1151 U	7097 UJ	398 U	351 U	25714 UR
4-chloro-3-methylphenol		11786 UR	7765 UR	1151 UR	7097 UJ	398 U	351 U	25714 UR
2-methylnaphthalene		18000	15000	1151 U	11000 J	2900	351 U	67000 J
hexachlorocyclopentadiene		11786 U	7765 U	1151 U	7097 UJ	398 U	351 U	25714 UR
2,4,6-trichlorophenol		11786 UR	7765 UR	1151 UR	7097 UJ	398 U	351 U	25714 UR
2,4,5-trichlorophenol		57143 UR	37647 UR	5581 UR	34409 UJ	1928 U	1702 U	124675 UR
2-chloronaphthalene		11786 U	7765 U	1151 U	7097 UJ	398 U	351 U	25714 UR
2-nitroaniline		57143 U	37647 U	5581 U	34409 UJ	1928 U	1702 U	124675 UR
dimethyl phthalate		11786 U	7765 U	1151 U	7097 UJ	398 U	351 U	25714 UR
acenaphthylene		11786 U	7765 U	1151 U	7097 UJ	398 U	351 U	25714 UR
2,6-dinitrotoluene		11786 U	7765 U	1151 U	7097 UJ	398 U	351 U	25714 UR
3-nitroaniline		57143 U	37647 U	5581 U	34409 UJ	1928 UJ	1702 U	124675 UR

SEMIVOLATILE ORGANICS DATA	SAMPLE ID	NS2-BH2-SO2-15		NS2-BH2-SO3-15FD		NS2-BH4-SO1-5		NS2-BH4-SO2-10		NS2-BH8-SO3-15		NS2-BH15-SO1-5		NS2-MW10-SO3-15	
CLIENT - IT CORPORATION	MATRIX	SOLID		SOLID		SOLID		SOLID		SOLID		SOLID		SOLID	
SITE NAME - SAN DIEGO NAVSTA	DILUTION	30.00		20.00		3.00		20.00		1.00		1.00		60.00	
PREPARATION DATE - 26 JULY 91	BLANK ID	SBLK3		SBLK3		SBLK2		SBLK2		SBLK1		SBLK1		SBLK4	
FILE ID - SVS2-791	UNITS	ug/kg		ug/kg		ug/kg		ug/kg		ug/kg		ug/kg		ug/kg	
	% SOLIDS	84		85		86		93		83		94		77	
FILE PRINT DATE ------->	31-Jan-92														
acenaphthene		11786	U	7765	U	720	J	7097	UJ	398	U	351	U	25714	UR
2,4-dinitrophenol		57143	UR	37647	UR	5581	UR	34409	UJ	1928	U	1702	U	124675	UR
4-nitrophenol		57143	UR	37647	UR	5581	UR	34409	UJ	1928	U	1702	U	124675	UR
dibenzofuran		11786	U	7765	U	460	J	7097	UJ	398	U	351	U	25714	UR
2,4-dinitrotoluene		11786	U	7765	U	1151	U	7097	UJ	398	U	351	U	25714	UR
diethylphthalate		11786	U	7765	U	1151	U	7097	UJ	398	U	351	U	25714	UR
4-chlorophenyl phenyl ether		11786	U	7765	U	1151	U	7097	UJ	398	U	351	U	25714	UR
fluorene		2800	J	2400	J	970	J	7097	UJ	398	U	351	U	7400	J
4-nitroaniline		57143	U	37647	U	5581	U	34409	UJ	1928	U	1702	U	124675	UR
4,6-dinitro-2-methylphenol		57143	UR	37647	UR	5581	UR	34409	UJ	1928	U	1702	U	124675	UR
N-nitrosodiphenylamine		11786	U	7765	U	1151	U	7097	UJ	398	U	351	U	25714	UR
4-bromophenyl phenyl ether		11786	U	7765	U	1151	U	7097	UJ	398	U	351	U	25714	UR
hexachlorobenzene		11786	U	7765	U	1151	U	7097	UJ	398	U	351	U	25714	UR
pentachlorophenol		57143	UR	37647	UR	5581	UR	34409	UJ	1928	U	1702	U	124675	UR
phenanthrene		4600	J	3600	J	13000		3300	J	398	U	54	J	12000	J
anthracene		11786	U	7765	U	2400		7097	UJ	398	U	351	U	25714	UR
di-n-butyl phthalate		11786	U	7765	U	1151	U	7097	UJ	398	U	351	U	25714	UR
fluoranthene		11786	U	1000	J	15000		7097	UJ	398	U	150	J	25714	UR
pyrene		11786	U	1000	J	11000		1500	J	398	U	140	J	25714	UR
butyl benzyl phthalate		11786	U	7765	U	1151	U	7097	UJ	398	U	351	U	25714	UR
3,3'-dichlorobenzidine		23571	U	15529	U	2302	U	14194	UJ	795	U	702	U	51429	UR
benzo(a)anthracene		11786	U	7765	U	5600		7097	UJ	398	U	351	U	25714	UR
chrysene		11786	U	7765	U	5600		7097	UJ	398	U	110	J	25714	UR
bis(2-ethylhexyl)phthalate		11786	U	7765	U	1151	U	7097	UJ	96	J	220	J	25714	UR
di-n-octyl phthalate		11786	U	7765	U	1151	U	7097	UJ	398	U	351	U	25714	UR
benzo(b)fluoranthene		11786	U	7765	U	3100		7097	UJ	398	U	82	J	25714	UR
benzo(k)fluoranthene		11786	U	7765	U	4300		7097	UJ	398	U	120	J	25714	UR
benzo(a)pyrene		11786	U	7765	U	3100		7097	UJ	398	U	351	U	25714	UR
indeno(1,2,3-cd)pyrene		11786	U	7765	U	1300		7097	UJ	398	U	351	U	25714	UR
dibenzo(a,h)anthracene		11786	U	7765	U	1151	U	7097	UJ	398	U	351	U	25714	UR
benzo(g,h,i,)perylene		11786	U	7765	U	1500		7097	UJ	398	U	351	U	25714	UR

SEMIVOLATILE ORGANICS DATA	SAMPLE ID	NS2-MW12-SO1-5		NS2-MW12-SO1-15FD		SBLK1		SBLK1A		SBLK2		SBLK2A		SBLK3		SBLK4	
CLIENT - IT CORPORATION	MATRIX	SOLID		SOLID		SOLID		SOLID		SOLID		SOLID		SOLID		SOLID	
SITE NAME - SAN DIEGO NAVSTA	DILUTION	1.00		1.00		1.00		1.00		1.00		1.00		1.00		60.00	
PREPARATION DATE - 26 JULY 91	BLANK ID	SBLK2A		SBLK1A		03/11/91		03/08/91		03/07/91		03/14/91		03/09/91		03/25/91	
FILE ID - SVS2-791	UNITS	ug/kg		ug/kg		ug/kg		ug/kg		ug/kg		ug/kg		ug/kg		ug/kg	
	% SOLIDS	97		95		100		100		100		100		100		100	
FILE PRINT DATE ------>	31-Jan-92																
phenol		340	UR	347	U	330	U	330	U	330	U	330	U	330	U	19800	U
bis(2-chloroethyl)ether		340	UR	347	U	330	U	330	U	330	U	330	U	330	U	19800	U
2-chlorophenol		340	UR	347	U	330	U	330	U	330	U	330	U	330	U	19800	U
1,3-dichlorobenzene		340	UR	347	U	330	U	330	U	330	U	330	U	330	U	19800	U
1,4-dichlorobenzene		340	UR	347	U	330	U	330	U	330	U	330	U	330	U	19800	U
benzyl alcohol		340	UR	347	U	330	U	330	U	330	U	330	U	330	U	19800	U
1,2-dichlorobenzene		340	UR	347	U	330	U	330	U	330	U	330	U	330	U	19800	U
2-methylphenol		340	UR	347	U	330	U	330	U	330	U	330	U	330	U	19800	U
bis(2-chloroisopropyl)ether		340	UR	347	U	330	U	330	U	330	U	330	U	330	U	19800	U
4-methylphenol		340	UR	347	U	330	U	330	U	330	U	330	U	330	U	19800	U
N-nitrosodipropylamine		340	UR	347	U	330	U	330	U	330	U	330	U	330	U	19800	U
hexachloroethane		340	UR	347	U	330	U	330	U	330	U	330	U	330	U	19800	U
nitrobenzene		340	UR	347	U	330	U	330	U	330	U	330	U	330	U	19800	U
isophorone		340	UR	347	U	330	U	330	U	330	U	330	U	330	U	19800	U
2-nitrophenol		340	UR	347	U	330	U	330	U	330	U	330	U	330	U	19800	U
2,4-dimethylphenol		340	UR	347	U	330	U	330	U	330	U	330	U	330	U	19800	U
benzoic acid		1649	UR	1684	U	1600	U	1600	U	1600	U	1600	U	1600	U	96000	U
bis(2-chloroethoxy)methane		340	UR	347	U	330	U	330	U	330	U	330	U	330	U	19800	U
2,4-dichlorophenol		340	UR	347	U	330	U	330	U	330	U	330	U	330	U	19800	U
1,2,4-trichlorobenzene		340	UR	347	U	330	U	330	U	330	U	330	U	330	U	19800	U
naphthalene		340	UR	347	U	330	U	330	U	330	U	330	U	330	U	19800	U
4-chloroaniline		340	UR	347	UJ	330	U	330	U	330	U	330	U	330	U	19800	U
hexacholorobutadiene		340	UR	347	U	330	U	330	U	330	U	330	U	330	U	19800	U
4-chloro-3-methylphenol		340	UR	347	U	330	U	330	U	330	U	330	U	330	U	19800	U
2-methylnaphthalene		340	UR	347	U	330	U	330	U	330	U	330	U	330	U	19800	U
hexachlorocyclopentadiene		340	UR	347	U	330	U	330	U	330	U	330	U	330	U	19800	U
2,4,6-trichlorophenol		340	UR	347	U	330	U	330	U	330	U	330	U	330	U	19800	U
2,4,5-trichlorophenol		1649	UR	1684	U	1600	U	1600	U	1600	U	1600	U	1600	U	96000	U
2-chloronaphthalene		340	UR	347	U	330	U	330	U	330	U	330	U	330	U	19800	U
2-nitroaniline		1649	UR	1684	U	1600	U	1600	U	1600	U	1600	U	1600	U	96000	U
dimethyl phthalate		340	UR	347	U	330	U	330	U	330	U	330	U	330	U	19800	U
acenaphthylene		340	UR	347	U	330	U	330	U	330	U	330	U	330	U	19800	U
2,6-dinitrotoluene		340	UR	347	U	330	U	330	U	330	U	330	U	330	U	19800	U
3-nitroaniline		1649	UR	1684	U	1600	U	1600	U	1600	U	1600	U	1600	U	96000	U

SEMIVOLATILE ORGANICS DATA	SAMPLE ID	NS2-MW12-SO1-5		NS2-MW12-SO1-15FD		SBLK1		SBLK1A		SBLK2		SBLK2A		SBLK3		SBLK4	
CLIENT - IT CORPORATION	MATRIX	SOLID		SOLID		SOLID		SOLID		SOLID		SOLID		SOLID		SOLID	
SITE NAME - SAN DIEGO NAVSTA	DILUTION	1.00		1.00		1.00		1.00		1.00		1.00		1.00		60.00	
PREPARATION DATE - 26 JULY 91	BLANK ID	SBLK2A		SBLK1A		03/11/91		03/08/91		03/07/91		03/14/91		03/09/91		03/25/91	
FILE ID - SVS2-791	UNITS	ug/kg		ug/kg		ug/kg		ug/kg		ug/kg		ug/kg		ug/kg		ug/kg	
	% SOLIDS	97		95		100		100		100		100		100		100	
FILE PRINT DATE ------>	31-Jan-92																
acenaphthene		340	UR	347	U	330	U	330	U	330	U	330	U	330	U	19800	U
2,4-dinitrophenol		1649	UR	1684	U	1600	U	1600	U	1600	U	1600	U	1600	U	96000	U
4-nitrophenol		1649	UR	1684	U	1600	U	1600	U	1600	U	1600	U	1600	U	96000	U
dibenzofuran		340	UR	347	U	330	U	330	U	330	U	330	U	330	U	19800	U
2,4-dinitrotoluene		340	UR	347	U	330	U	330	U	330	U	330	U	330	U	19800	U
diethylphthalate		340	UR	347	U	330	U	330	U	330	U	330	U	330	U	19800	U
4-chlorophenyl phenyl ether		340	UR	347	U	330	U	330	U	330	U	330	U	330	U	19800	U
fluorene		340	UR	347	U	330	U	330	U	330	U	330	U	330	U	19800	U
4-nitroaniline		1649	UR	1684	U	1600	U	1600	U	1600	U	1600	U	1600	U	96000	U
4,6-dinitro-2-methylphenol		1649	UR	1684	U	1600	U	1600	U	1600	U	1600	U	1600	U	96000	U
N-nitrosodiphenylamine		340	UR	347	U	330	U	330	U	330	U	330	U	330	U	19800	U
4-bromophenyl phenyl ether		340	UR	347	U	330	U	330	U	330	U	330	U	330	U	19800	U
hexachlorobenzene		340	UR	347	U	330	U	330	U	330	U	330	U	330	U	19800	U
pentachlorophenol		1649	UR	1684	U	1600	U	1600	U	1600	U	1600	U	1600	U	96000	U
phenanthrene		340	UR	310	J	330	U	330	U	330	U	330	U	330	U	19800	U
anthracene		340	UR	67	J	330	U	330	U	330	U	330	U	330	U	19800	U
di-n-butyl phthalate		340	UR	347	U	330	U	330	U	330	U	330	U	330	U	19800	U
fluoranthene		340	UR	960		330	U	330	U	330	U	330	U	330	U	19800	U
pyrene		340	UR	980		330	U	330	U	330	U	330	U	330	U	19800	U
butyl benzyl phthalate		340	UR	347	U	330	U	330	U	330	U	330	U	330	U	19800	U
3,3'-dichlorobenzidine		680	UR	695	U	660	U	660	U	660	U	660	U	660	U	39600	U
benzo(a)anthracene		340	UR	350		330	U	330	U	330	U	330	U	330	U	19800	U
chrysene		340	UR	540		330	U	330	U	330	U	330	U	330	U	19800	U
bis(2-ethylhexyl)phthalate		340	UR	347	U	330	U	330	U	330	U	330	U	330	U	19800	U
di-n-octyl phthalate		340	UR	347	U	330	U	330	U	330	U	330	U	330	U	19800	U
benzo(b)fluoranthene		340	UR	440		330	U	330	U	330	U	330	U	330	U	19800	U
benzo(k)fluoranthene		340	UR	390		330	U	330	U	330	U	330	U	330	U	19800	U
benzo(a)pyrene		340	UR	280	J	330	U	330	U	330	U	330	U	330	U	19800	U
indeno(1,2,3-cd)pyrene		340	UR	220	J	330	U	330	U	330	U	330	U	330	U	19800	U
dibenzo(a,h)anthracene		340	UR	347	U	330	U	330	U	330	U	330	U	330	U	19800	U
benzo(g,h,i,)perylene		340	UR	260	J	330	U	330	U	330	U	330	U	330	U	19800	U

SEMIVOLATILE ORGANICS DATA	NS2-MW5-GW1	NS2-ER-2-4-91	NS2-ER-2-5-91	NS2-ER-2-6-91	NS2-ER-2-7-91	NS2-ER-2-15-91	NS2-FB-2-5-91	NS2-FB-2-7-91	SBLK1
CLIENT - IT CORPORATION	WATER	WATER	WATER	WATER	WATER	WATER	WATER	WATER	WATER
SITE NAME - SAN DIEGO NAVSTA	1.00	1.00	1.00	1.00	1.00	1.00	1.00	1.00	1.00
PREPARATION DATE - 26 JULY 91	SBLK1A	SBLK1	SBLK1	SBLK2	SBLK2	SBLK1A	SBLK1	SBLK2	02/14/91
FILE ID - SV2-791S	ug/l	ug/l	ug/l	ug/l	ug/l	ug/l	ug/l	ug/l	ug/l
FILE PRINT DATE ——>									
benzoic acid	2 J	50 UJ	50 UJ	50 UJ	50 U	50 U	50 UJ	50 UJ	50 U

SEMIVOLATILE ORGANICS DATA	SBLK1A	SBLK2
CLIENT - IT CORPORATION	WATER	WATER
SITE NAME - SAN DIEGO NAVSTA	1.00	1.00
PREPARATION DATE - 26 JULY 91	03/21/91	02/19/91
FILE ID - SV2-791S	ug/l	ug/l
FILE PRINT DATE ——>		
benzoic acid	50 U	50 U

SEMIVOLATILE ORGANICS DATA	NS2-MW5-GW1	NS2-ER-2-4-91	NS2-ER-2-5-91	NS2-ER-2-6-91	NS2-ER-2-7-91	NS2-ER-2-15-9	NS2-FB-2-5-91	NS2-FB-2-7-91	SBLK1	SBLK1A	SBLK2
CLIENT - IT CORPORATION	WATER	WATER	WATER	WATER	WATER	WATER	WATER	WATER	WATER	WATER	WATER
SITE NAME - SAN DIEGO NAVSTA	1.00	1.00	1.00	1.00	1.00	1.00	1.00	1.00	1.00	1.00	1.00
PREPARATION DATE - 26 JULY 91	SBLK1A	SBLK1	SBLK1	SBLK2	SBLK2	SBLK1A	SBLK1	SBLK2	02/14/91	03/21/91	02/19/91
FILE ID - SV2-791	ug/l	ug/l	ug/l	ug/l	ug/l	ug/l	ug/l	ug/l	ug/l	ug/l	ug/l
FILE PRINT DATE ---->											
phenol	10 U	10 U	6 J	3 J	10 U	10 U	6 J	3 J	10 U	10 U	10 U
bis(2-chloroethyl)ether	10 U	10 U	10 U	10 U	10 U	10 U	10 U	10 U	10 U	10 U	10 U
2-chlorophenol	10 U	10 U	10 U	10 U	10 U	10 U	10 U	10 U	10 U	10 U	10 U
1,3-dichlorobenzene	10 U	10 U	10 U	10 U	10 U	10 U	10 U	10 U	10 U	10 U	10 U
1,4-dichlorobenzene	10 U	10 U	10 U	10 U	10 U	10 U	10 U	10 U	10 U	10 U	10 U
benzyl alcohol	10 U	10 U	10 U	10 U	10 U	1 J	10 U	10 U	10 U	10 U	10 U
1,2-dichlorobenzene	10 U	10 U	10 U	10 U	10 U	10 U	10 U	10 U	10 U	10 U	10 U
2-methylphenol	10 U	10 U	10 U	10 U	10 U	10 U	10 U	10 U	10 U	10 U	10 U
bis(2-chloroisopropyl)ether	10 U	10 U	10 U	10 U	10 U	10 U	10 U	10 U	10 U	10 U	10 U
4-methylphenol	10 U	10 U	10 U	10 U	10 U	10 U	10 U	10 U	10 U	10 U	10 U
N-nitrosodipropylamine	10 U	10 U	10 U	10 U	10 U	10 U	10 U	10 U	10 U	10 U	10 U
hexachloroethane	10 U	10 U	10 U	10 U	10 U	10 U	10 U	10 U	10 U	10 U	10 U
nitrobenzene	10 U	10 U	10 U	10 U	10 U	10 U	10 U	10 U	10 U	10 U	10 U
isophorone	10 U	10 U	10 U	10 U	10 U	10 U	10 U	10 U	10 U	10 U	10 U
2-nitrophenol	10 U	10 U	10 U	10 U	10 U	10 U	10 U	10 U	10 U	10 U	10 U
2,4-dimethylphenol	10 U	10 U	10 U	10 U	10 U	10 U	10 U	10 U	10 U	10 U	10 U
benzoic acid	2 J	50 UJ	50 UJ	50 UJ	50 U	50 U	50 UJ	50 UJ	50 U	50 U	50 U
bis(2-chloroethoxy)methane	10 U	10 U	10 U	10 U	10 U	10 U	10 U	10 U	10 U	10 U	10 U
2,4-dichlorophenol	10 U	10 U	10 U	10 U	10 U	10 U	10 U	10 U	10 U	10 U	10 U
1,2,4-trichlorobenzene	10 U	10 U	10 U	10 U	10 U	10 U	10 U	10 U	10 U	10 U	10 U
naphthalene	10 U	10 U	10 U	10 U	10 U	10 U	10 U	10 U	10 U	10 U	10 U
4-chloroaniline	10 U	10 U	10 U	10 U	10 U	10 U	10 U	10 U	10 U	10 U	10 U
hexacholorobutadiene	10 U	10 U	10 U	10 U	10 U	10 U	10 U	10 U	10 U	10 U	10 U
4-chloro-3-methylphenol	10 U	10 U	10 U	10 U	10 U	10 U	10 U	10 U	10 U	10 U	10 U
2-methylnaphthalene	10 U	10 U	10 U	10 U	10 U	10 U	10 U	10 U	10 U	10 U	10 U
hexachlorocyclopentadiene	10 U	10 U	10 U	10 U	10 U	10 U	10 U	10 U	10 U	10 U	10 U
2,4,6-trichlorophenol	10 U	10 U	10 U	10 U	10 U	10 U	10 U	10 U	10 U	10 U	10 U
2,4,5-trichlorophenol	50 U	50 U	50 U	50 U	50 U	50 U	50 U	50 U	50 U	50 U	50 U
2-chloronaphthalene	10 U	10 U	10 U	10 U	10 U	10 U	10 U	10 U	10 U	10 U	10 U
2-nitroaniline	50 U	50 U	50 U	50 U	50 U	50 U	50 U	50 U	50 U	50 U	50 U
dimethyl phthalate	10 U	10 U	10 U	10 U	10 U	10 U	10 U	10 U	10 U	10 U	10 U
acenaphthylene	10 U	10 U	10 U	10 U	10 U	10 U	10 U	10 U	10 U	10 U	10 U
2,6-dinitrotoluene	10 U	10 U	10 U	10 U	10 U	10 U	10 U	10 U	10 U	10 U	10 U
3-nitroaniline	50 U	50 UJ	50 U	50 U	50 UJ	50 U	50 U	50 U	50 U	50 U	50 U
acenaphthene	10 U	10 U	10 U	10 U	10 U	10 U	10 U	10 U	10 U	10 U	10 U

SEMIVOLATILE ORGANICS DATA	NS2-MW5-GW1	NS2-ER-2-4-91	NS2-ER-2-5-91	NS2-ER-2-6-91	NS2-ER-2-7-91	NS2-ER-2-15-9	NS2-FB-2-5-91	NS2-FB-2-7-91	SBLK1	SBLK1A	SBLK2
CLIENT - IT CORPORATION	WATER	WATER	WATER	WATER	WATER	WATER	WATER	WATER	WATER	WATER	WATER
SITE NAME - SAN DIEGO NAVSTA	1.00	1.00	1.00	1.00	1.00	1.00	1.00	1.00	1.00	1.00	1.00
PREPARATION DATE - 26 JULY 91	SBLK1A	SBLK1	SBLK1	SBLK2	SBLK2	SBLK1A	SBLK1	SBLK2	02/14/91	03/21/91	02/19/91
FILE ID - SV2-791	ug/l	ug/l	ug/l	ug/l	ug/l	ug/l	ug/l	ug/l	ug/l	ug/l	ug/l
FILE PRINT DATE ——>											
2,4-dinitrophenol	50 U	50 U	50 U	50 U	50 UJ	50 U	50 U	50 U	50 U	50 U	50 U
4-nitrophenol	50 U	50 U	50 U	50 U	50 U	50 U	50 U	50 U	50 U	50 U	50 U
dibenzofuran	10 U	10 U	10 U	10 U	10 U	10 U	10 U	10 U	10 U	10 U	10 U
2,4-dinitrotoluene	10 U	10 U	10 U	10 U	10 U	10 U	10 U	10 U	10 U	10 U	10 U
diethylphthalate	10 U	10 U	10 U	10 U	10 U	10 U	10 U	10 U	10 U	10 U	10 U
4-chlorophenyl phenyl ether	10 U	10 U	10 U	10 U	10 U	10 U	10 U	10 U	10 U	10 U	10 U
fluorene	10 U	10 U	10 U	10 U	10 U	10 U	10 U	10 U	10 U	10 U	10 U
4-nitroaniline	50 U	50 UJ	50 UJ	50 U	50 U	50 U	50 UJ	50 U	50 U	50 U	50 U
4,6-dinitro-2-methylphenol	50 U	50 U	50 U	50 U	50 U	50 U	50 U	50 U	50 U	50 U	50 U
N-nitrosodiphenylamine	10 U	10 U	10 U	10 U	10 U	10 U	1 J	10 U	10 U	10 U	10 U
4-bromophenyl phenyl ether	10 U	10 U	10 U	10 U	10 U	10 U	10 U	10 U	10 U	10 U	10 U
hexachlorobenzene	10 U	10 U	10 U	10 U	10 U	10 U	10 U	10 U	10 U	10 U	10 U
pentachlorophenol	50 U	50 U	50 U	50 U	50 U	50 U	50 U	50 U	50 U	50 U	50 U
phenanthrene	10 U	10 U	10 U	10 U	10 U	10 U	10 U	10 U	10 U	10 U	10 U
anthracene	10 U	10 U	10 U	10 U	10 U	10 U	10 U	10 U	10 U	10 U	10 U
di-n-butyl phthalate	10 U	10 U	1 J	10 U	10 U	10 U	2 J	10 U	10 U	10 U	10 U
fluoranthene	10 U	10 U	10 U	10 U	10 U	10 U	10 U	10 U	10 U	10 U	10 U
pyrene	10 U	10 U	10 U	10 U	10 U	10 U	10 U	10 U	10 U	10 U	10 U
butyl benzyl phthalate	10 U	10 U	10 U	10 U	10 U	10 U	10 U	10 U	10 U	10 U	10 U
3,3'-dichlorobenzidine	20 U	20 U	20 U	20 U	20 U	20 U	20 U	20 U	20 U	20 U	20 U
benzo(a)anthracene	10 U	10 U	10 U	10 U	10 U	10 U	10 U	10 U	10 U	10 U	10 U
chrysene	10 U	10 U	10 U	10 U	10 U	10 U	10 U	10 U	10 U	10 U	10 U
bis(2-ethylhexyl)phthalate	10 U	10 U	10 U	1 BJ	10 U	10 U	10 U	10 U	10 U	1 J	2 J
di-n-octyl phthalate	10 U	10 U	10 U	10 U	10 U	10 U	10 U	10 U	10 U	10 U	10 U
benzo(b)fluoranthene	10 U	10 U	10 U	10 U	10 U	10 U	10 U	10 U	10 U	10 U	10 U
benzo(k)fluoranthene	10 U	10 U	10 U	10 U	10 U	10 U	10 U	10 U	10 U	10 U	10 U
benzo(a)pyrene	10 U	10 U	10 U	10 U	10 U	10 U	10 U	10 U	10 U	10 U	10 U
indeno(1,2,3-cd)pyrene	10 U	10 U	10 U	10 U	10 U	10 U	10 U	10 U	10 U	10 U	10 U
dibenzo(a,h)anthracene	10 U	10 U	10 U	10 U	10 U	10 U	10 U	10 U	10 U	10 U	10 U
benzo(g,h,i,)perylene	10 U	10 U	10 U	10 U	10 U	10 U	10 U	10 U	10 U	10 U	10 U

PESTICIDE/PCB DATA	NS2-BH2-SO2-15		NS2-BH2-SO3-15FD		NS2-BH4-SO1-5		NS2-BH4-SO2-10		NS2-BH8-SO3-15		NS2-BH15-SO1-5		NS2-MW10-SO3-15		NS2-MW12-SO1-5	
CLIENT - IT CORPORATION	SOLID		SOLID		SOLID		SOLID		SOLID		SOLID		SOLID		SOLID	
SITE NAME - SAN DIEGO NAVSTA	1.00		1.00		10.00		1.00		1.00		2.00		1.00		1.00	
PREPARATION DATE - 25 JULY 91	MB5				MB2		MB3		MB1		MB1		MB7		MB3A	
FILE ID - PS2-791S	ug/kg		ug/kg		ug/kg		ug/kg		ug/kg		ug/kg		ug/kg		ug/kg	
	84		85		86		93		83		94		77		97	
FILE PRINT DATE ------>																
4,4'-DDD	19.0	UJ	18.8	UJ	186.0	UJ	17.2	UJ	19.3	UJ	34.0	UJ	20.8	UJ	16.5	UJ
AROCLOR-1260	408.0	J	340.0		1860.5	UJ	172.0	UJ	192.8	UJ	560.0	J	207.8	UJ	164.9	UJ

PESTICIDE/PCB DATA	NS2-MW12-S01-5FD		MB1		MB2		MB3		MB3A		MB5		MB7	
CLIENT - IT CORPORATION	SOLID		SOLID		SOLID		SOLID		SOLID		SOLID		SOLID	
SITE NAME - SAN DIEGO NAVSTA	2.00		1.00		1.00		1.00		1.00		1.00		1.00	
PREPARATION DATE - 25 JULY 91			03/21/91		03/18/91		03/18/91		03/20/91		03/11/91		03/22/91	
FILE ID - PS2-791S	ug/kg		ug/kg		ug/kg		ug/kg		ug/kg		ug/kg		ug/kg	
	95		100		100		100		100		100		100	
FILE PRINT DATE ------>														
4,4'-DDD	20.0	J	16.0	U	16.0	U	16.0	U	16.0	U	16.0	U	16.0	U
AROCLOR-1260	336.8	UJ	160.0	U	160.0	U	160.0	U	160.0	U	160.0	U	160.0	U

PESTICIDE/PCB DATA	SAMPLE ID	NS2-BH2-SO2-15	NS2-BH2-S03-15FD	NS2-BH4-SO1-5	NS2-BH4-SO2-10	NS2-BH8-SO3-15	NS2-BH15-SO1-5	NS2-MW10-SO3-15
CLIENT - IT CORPORATION	MATRIX	SOLID	SOLID	SOLID	SOLID	SOLID	SOLID	SOLID
SITE NAME - SAN DIEGO NAVSTA	DILUTION	1.00	1.00	10.00	1.00	1.00	2.00	1.00
PREPARATION DATE - 25 JULY 91	BLANK ID	MB5		MB2	MB3	MB1	MB1	MB7
FILE ID - PS2-791	UNITS	ug/kg	ug/kg	ug/kg	ug/kg	ug/kg	ug/kg	ug/kg
	% SOLIDS	84	85	86	93	83	94	77
FILE PRINT DATE ------>	31-Jan-92							
alpha-BHC		9.5 UJ	9.4 UJ	93.0 UJ	8.6 UJ	9.6 UJ	17.0 UJ	10.4 UJ
beta-BHC		9.5 UJ	9.4 UJ	93.0 UJ	8.6 UJ	9.6 UJ	17.0 UJ	10.4 UJ
delta-BHC		9.5 UJ	9.4 UJ	93.0 UJ	8.6 UJ	9.6 UJ	17.0 UJ	10.4 UJ
gamma-BHC (lindane)		9.5 UJ	9.4 UJ	93.0 UJ	8.6 UJ	9.6 UJ	17.0 UJ	10.4 UJ
heptachlor		9.5 UJ	9.4 UJ	93.0 UJ	8.6 UJ	9.6 UJ	17.0 UJ	10.4 UJ
aldrin		9.5 UJ	9.4 UJ	93.0 UJ	8.6 UJ	9.6 UJ	17.0 UJ	10.4 UJ
heptachlor epoxide		9.5 UJ	9.4 UJ	93.0 UJ	8.6 UJ	9.6 UJ	17.0 UJ	10.4 UJ
endosulfan I		9.5 UJ	9.4 UJ	93.0 UJ	8.6 UJ	9.6 UJ	17.0 UJ	10.4 UJ
dieldrin		19.0 UJ	18.8 UJ	186.0 UJ	17.2 UJ	19.3 UJ	34.0 UJ	20.8 UJ
4,4'-DDE		19.0 UJ	18.8 UJ	186.0 UJ	17.2 UJ	19.3 UJ	34.0 UJ	20.8 UJ
endrin		19.0 UJ	18.8 UJ	186.0 UJ	17.2 UJ	19.3 UJ	34.0 UJ	20.8 UJ
endosulfan II		19.0 UJ	18.8 UJ	186.0 UJ	17.2 UJ	19.3 UJ	34.0 UJ	20.8 UJ
4,4'-DDD		19.0 UJ	18.8 UJ	186.0 UJ	17.2 UJ	19.3 UJ	34.0 UJ	20.8 UJ
endosulfan sulfate		19.0 UJ	18.8 UJ	186.0 UJ	17.2 UJ	19.3 UJ	34.0 UJ	20.8 UJ
4,4'-DDT		19.0 UJ	18.8 UJ	186.0 UJ	17.2 UJ	19.3 UJ	34.0 UJ	20.8 UJ
methoxychlor		95.2 UJ	94.1 UJ	930.2 UJ	86.0 UJ	96.4 UJ	170.2 UJ	103.9 UJ
endrin ketone		19.0 UJ	18.8 UJ	186.0 UJ	17.2 UJ	19.3 UJ	34.0 UJ	20.8 UJ
alpha-chlordane		95.2 UJ	94.1 UJ	930.2 UJ	86.0 UJ	96.4 UJ	170.2 UJ	103.9 UJ
gamma-chlordane		95.2 UJ	94.1 UJ	930.2 UJ	86.0 UJ	96.4 UJ	170.2 UJ	103.9 UJ
toxaphene		190.5 UJ	188.2 UJ	1860.5 UJ	172.0 UJ	192.8 UJ	340.4 UJ	207.8 UJ
AROCLOR-1016		95.2 UJ	94.1 UJ	930.2 UJ	86.0 UJ	96.4 UJ	170.2 UJ	103.9 UJ
AROCLOR-1221		95.2 UJ	94.1 UJ	930.2 UJ	86.0 UJ	96.4 UJ	170.2 UJ	103.9 UJ
AROCLOR-1232		95.2 UJ	94.1 UJ	930.2 UJ	86.0 UJ	96.4 UJ	170.2 UJ	103.9 UJ
AROCLOR-1242		95.2 UJ	94.1 UJ	930.2 UJ	86.0 UJ	96.4 UJ	170.2 UJ	103.9 UJ
AROCLOR-1248		95.2 UJ	94.1 UJ	930.2 UJ	86.0 UJ	96.4 UJ	170.2 UJ	103.9 UJ
AROCLOR-1254		190.5 UJ	188.2 UJ	1860.5 UJ	172.0 UJ	192.8 UJ	340.4 UJ	207.8 UJ
AROCLOR-1260		408.0 J	340.0	1860.5 UJ	172.0 UJ	192.8 UJ	560.0 J	207.8 UJ

PESTICIDE/PCB DATA	SAMPLE ID	NS2-MW12-SO1-5		NS2-MW12-S01-5FD		MB1		MB2		MB3		MB3A		MB5		MB7	
CLIENT - IT CORPORATION	MATRIX	SOLID		SOLID		SOLID		SOLID		SOLID		SOLID		SOLID		SOLID	
SITE NAME - SAN DIEGO NAVSTA	DILUTION	1.00		2.00		1.00		1.00		1.00		1.00		1.00		1.00	
PREPARATION DATE - 25 JULY 91	BLANK ID	MB3A				03/21/91		03/18/91		03/18/91		03/20/91		03/11/91		03/22/91	
FILE ID - PS2-791	UNITS	ug/kg		ug/kg		ug/kg		ug/kg		ug/kg		ug/kg		ug/kg		ug/kg	
	% SOLIDS	97		95		100		100		100		100		100		100	
FILE PRINT DATE ------>	31-Jan-92																
alpha-BHC		8.2	UJ	16.8	UJ	8.0	U	8.0	U	8.0	U	8.0	U	8.0	U	8.0	U
beta-BHC		8.2	UJ	16.8	UJ	8.0	U	8.0	U	8.0	U	8.0	U	8.0	U	8.0	U
delta-BHC		8.2	UJ	16.8	UJ	8.0	U	8.0	U	8.0	U	8.0	U	8.0	U	8.0	U
gamma-BHC (lindane)		8.2	UJ	16.8	UJ	8.0	U	8.0	U	8.0	U	8.0	U	8.0	U	8.0	U
heptachlor		8.2	UJ	16.8	UJ	8.0	U	8.0	U	8.0	U	8.0	U	8.0	U	8.0	U
aldrin		8.2	UJ	16.8	UJ	8.0	U	8.0	U	8.0	U	8.0	U	8.0	U	8.0	U
heptachlor epoxide		8.2	UJ	16.8	UJ	8.0	U	8.0	U	8.0	U	8.0	U	8.0	U	8.0	U
endosulfan I		8.2	UJ	16.8	UJ	8.0	U	8.0	U	8.0	U	8.0	U	8.0	U	8.0	U
dieldrin		16.5	UJ	33.7	UJ	16.0	U	16.0	U	16.0	U	16.0	U	16.0	U	16.0	U
4,4'-DDE		16.5	UJ	33.7	UJ	16.0	U	16.0	U	16.0	U	16.0	U	16.0	U	16.0	U
endrin		16.5	UJ	33.7	UJ	16.0	U	16.0	U	16.0	U	16.0	U	16.0	U	16.0	U
endosulfan II		16.5	UJ	33.7	UJ	16.0	U	16.0	U	16.0	U	16.0	U	16.0	U	16.0	U
4,4'-DDD		16.5	UJ	20.0	J	16.0	U	16.0	U	16.0	U	16.0	U	16.0	U	16.0	U
endosulfan sulfate		16.5	UJ	33.7	UJ	16.0	U	16.0	U	16.0	U	16.0	U	16.0	U	16.0	U
4,4'-DDT		16.5	UJ	33.7	UJ	16.0	U	16.0	U	16.0	U	16.0	U	16.0	U	16.0	U
methoxychlor		82.5	UJ	168.4	UJ	80.0	U	80.0	U	80.0	U	80.0	U	80.0	U	80.0	U
endrin ketone		16.5	UJ	33.7	UJ	16.0	U	16.0	U	16.0	U	16.0	U	16.0	U	16.0	U
alpha-chlordane		82.5	UJ	168.4	UJ	80.0	U	80.0	U	80.0	U	80.0	U	80.0	U	80.0	U
gamma-chlordane		82.5	UJ	168.4	UJ	80.0	U	80.0	U	80.0	U	80.0	U	80.0	U	80.0	U
toxaphene		164.9	UJ	336.8	UJ	160.0	U	160.0	U	160.0	U	160.0	U	160.0	U	160.0	U
AROCLOR-1016		82.5	UJ	168.4	UJ	80.0	U	80.0	U	80.0	U	80.0	U	80.0	U	80.0	U
AROCLOR-1221		82.5	UJ	168.4	UJ	80.0	U	80.0	U	80.0	U	80.0	U	80.0	U	80.0	U
AROCLOR-1232		82.5	UJ	168.4	UJ	80.0	U	80.0	U	80.0	U	80.0	U	80.0	U	80.0	U
AROCLOR-1242		82.5	UJ	168.4	UJ	80.0	U	80.0	U	80.0	U	80.0	U	80.0	U	80.0	U
AROCLOR-1248		82.5	UJ	168.4	UJ	80.0	U	80.0	U	80.0	U	80.0	U	80.0	U	80.0	U
AROCLOR-1254		164.9	UJ	336.8	UJ	160.0	U	160.0	U	160.0	U	160.0	U	160.0	U	160.0	U
AROCLOR-1260		164.9	UJ	336.8	UJ	160.0	U	160.0	U	160.0	U	160.0	U	160.0	U	160.0	U

PESTICIDE/PCB DATA	SAMPLE ID	NS2-MW5-GW1	NS2-ER-2-4-91	NS2-ER-2-5-91	NS2-ER-2-6-91	NS2-ER-2-7-91	NS2-ER-2-15-91	NS2-FB-2-5-91	NS2-FB-2-7-91
CLIENT NAME - IT CORPORATION	MATRIX	WATER	WATER	WATER	WATER	WATER	WATER	WATER	WATER
SITE NAME - SAN DIEGO NAVSTA	DILUTION	1.00	4.00	1.00	1.00	1.00	1.00	1.00	1.00
PREPARATION DATE - 25 JULY 91	BLANK ID	MB1A	MB1	MB1B	MB2	MB1C	MB1A	MB1B	MB1C
FILE ID - P2-791	UNITS	ug/l	ug/l	ug/l	ug/l	ug/l	ug/l	ug/l	ug/l
FILE PRINT DATE ---->	31-Jan-92								
alpha-BHC		0.050 UJ	0.200 U	0.050 U	0.050 U	0.050 U	0.050 UJ	0.050 U	0.050 U
beta-BHC		0.050 UJ	0.200 U	0.050 U	0.050 U	0.050 U	0.050 UJ	0.050 U	0.050 U
delta-BHC		0.050 UJ	0.200 U	0.050 U	0.050 U	0.050 U	0.050 UJ	0.050 U	0.050 U
gamma-BHC (lindane)		0.050 UR	0.200 U	0.050 U	0.050 U	0.050 U	0.050 UR	0.050 U	0.050 U
heptachlor		0.050 UJ	0.200 U	0.050 U	0.050 U	0.050 U	0.050 UJ	0.050 U	0.050 U
aldrin		0.050 UJ	0.200 U	0.050 U	0.050 U	0.050 U	0.050 UJ	0.050 U	0.050 U
heptachlor epoxide		0.050 UJ	0.200 U	0.050 U	0.050 U	0.050 U	0.050 UJ	0.050 U	0.050 U
endosulfan I		0.050 UJ	0.200 U	0.050 U	0.050 U	0.050 U	0.050 UJ	0.050 U	0.050 U
dieldrin		0.100 UR	0.400 U	0.100 U	0.100 U	0.100 U	0.100 UR	0.100 U	0.100 U
4,4'-DDE		0.100 UJ	0.400 U	0.100 U	0.100 U	0.100 U	0.100 UJ	0.100 U	0.100 U
endrin		0.100 UR	0.400 U	0.100 U	0.100 U	0.100 U	0.100 UR	0.100 U	0.100 U
endosulfan II		0.100 UJ	0.400 U	0.100 U	0.100 U	0.100 U	0.100 UJ	0.100 U	0.100 U
4,4'-DDD		0.100 UJ	0.400 U	0.100 U	0.100 U	0.100 U	0.100 UJ	0.100 U	0.100 U
endosulfan sulfate		0.100 UJ	0.400 U	0.100 U	0.100 U	0.100 U	0.100 UJ	0.100 U	0.100 U
4,4'-DDT		0.100 UR	0.400 U	0.100 U	0.100 U	0.100 U	0.100 UR	0.100 U	0.100 U
methoxychlor		0.500 UJ	2.000 U	0.500 U	0.500 U	0.500 U	0.500 UJ	0.500 U	0.500 U
endrin ketone		0.100 UJ	0.400 U	0.100 U	0.100 U	0.100 U	0.100 UJ	0.100 U	0.100 U
alpha-chlordane		0.500 UJ	2.000 U	0.500 U	0.500 U	0.500 U	0.500 UJ	0.500 U	0.500 U
gamma-chlordane		0.500 UJ	2.000 U	0.500 U	0.500 U	0.500 U	0.500 UJ	0.500 U	0.500 U
toxaphene		1.000 UJ	4.000 U	1.000 U	1.000 U	1.000 U	1.000 UJ	1.000 U	1.000 U
AROCLOR-1016		0.500 UJ	2.000 U	0.500 U	0.500 U	0.500 U	0.500 UJ	0.500 U	0.500 U
AROCLOR-1221		0.500 UJ	2.000 U	0.500 U	0.500 U	0.500 U	0.500 UJ	0.500 U	0.500 U
AROCLOR-1232		0.500 UJ	2.000 U	0.500 U	0.500 U	0.500 U	0.500 UJ	0.500 U	0.500 U
AROCLOR-1242		0.500 UJ	2.000 U	0.500 U	0.500 U	0.500 U	0.500 UJ	0.500 U	0.500 U
AROCLOR-1248		0.500 UJ	2.000 U	0.500 U	0.500 U	0.500 U	0.500 UJ	0.500 U	0.500 U
AROCLOR-1254		1.000 UJ	4.000 U	1.000 U	1.000 U	1.000 U	1.000 UJ	1.000 U	1.000 U
AROCLOR-1260		1.000 UJ	4.000 U	1.000 U	1.000 U	1.000 U	1.000 UJ	1.000 U	1.000 U

PESTICIDE/PCB DATA	SAMPLE ID	MB1	MB1A	MB1B	MB1C	MB2
CLIENT NAME - IT CORPORATION	MATRIX	WATER	WATER	WATER	WATER	WATER
SITE NAME - SAN DIEGO NAVSTA	DILUTION	1.00	1.00	1.00	1.00	1.00
PREPARATION DATE - 25 JULY 91	BLANK ID	03/02/91	03/06/91	03/02/91	03/01/91	03/01/91
FILE ID - P2-791	UNITS	ug/l	ug/l	ug/l	ug/l	ug/l
FILE PRINT DATE ------>	31-Jan-92					
alpha-BHC		0.050 U	0.050 U	0.050 U	0.000 U	0.000 U
beta-BHC		0.050 U	0.050 U	0.050 U	0.000 U	0.000 U
delta-BHC		0.050 U	0.050 U	0.050 U	0.000 U	0.000 U
gamma-BHC (lindane)		0.050 U	0.050 U	0.050 U	0.000 U	0.000 U
heptachlor		0.050 U	0.050 U	0.050 U	0.000 U	0.000 U
aldrin		0.050 U	0.050 U	0.050 U	0.000 U	0.000 U
heptachlor epoxide		0.050 U	0.050 U	0.050 U	0.000 U	0.000 U
endosulfan I		0.050 U	0.050 U	0.050 U	0.000 U	0.000 U
dieldrin		0.100 U	0.100 U	0.100 U	0.000 U	0.000 U
4,4'-DDE		0.100 U	0.100 U	0.100 U	0.000 U	0.000 U
endrin		0.100 U	0.100 U	0.100 U	0.000 U	0.000 U
endosulfan II		0.100 U	0.100 U	0.100 U	0.000 U	0.000 U
4,4'-DDD		0.100 U	0.100 U	0.100 U	0.000 U	0.000 U
endosulfan sulfate		0.100 U	0.100 U	0.100 U	0.000 U	0.000 U
4,4'-DDT		0.100 U	0.100 U	0.100 U	0.000 U	0.000 U
methoxychlor		0.500 U	0.500 U	0.500 U	0.000 U	0.000 U
endrin ketone		0.100 U	0.100 U	0.100 U	0.000 U	0.000 U
alpha-chlordane		0.500 U	0.500 U	0.500 U	0.000 U	0.000 U
gamma-chlordane		0.500 U	0.500 U	0.500 U	0.000 U	0.000 U
toxaphene		1.000 U	1.000 U	1.000 U	0.000 U	0.000 U
AROCLOR-1016		0.500 U	0.500 U	0.500 U	0.000 U	0.000 U
AROCLOR-1221		0.500 U	0.500 U	0.500 U	0.000 U	0.000 U
AROCLOR-1232		0.500 U	0.500 U	0.500 U	0.000 U	0.000 U
AROCLOR-1242		0.500 U	0.500 U	0.500 U	0.000 U	0.000 U
AROCLOR-1248		0.500 U	0.500 U	0.500 U	0.000 U	0.000 U
AROCLOR-1254		1.000 U	1.000 U	1.000 U	0.000 U	0.000 U
AROCLOR-1260		1.000 U	1.000 U	1.000 U	0.000 U	0.000 U

INORGANICS DATA	SAMPLE ID	NS2-BH2-SO2-15	NS2-BH2-S03-15F	NS2-BH4-SO1-5	NS2-BH4-SO2-10	NS2-BH8-SO3-15	NS2-BH15-SO1-5	NS2-MW10-SO3-1	NS2-MW12-SO1-5
CLIENT - IT CORPORATION	MATRIX	SOLID	SOLID	SOLID	SOLID	SOLID	SOLID	SOLID	SOLID
SITE NAME - SAN DIEGO NAVSTA	DILUTION	1.00	1.00	1.00	1.00	1.00	1.00	1.00	1.00
PREPARATION DATE - 17 JULY 91	BLANK ID	NS2-ER-2-4-91	NS2-ER-2-4-91	NS2-FB-2-5-91	NS2-ER-2-5-91	NS2-ER-2-6-91	NS2-ER-2-6-91	NS2-ER-2-4-91	NS2-FB-2-7-91
FILE ID - IS2-791	UNITS	mg/kg	mg/kg	mg/kg	mg/kg	mg/kg	mg/kg	mg/kg	mg/kg
	% SOLIDS	84.00	85.00	86.00	93.00	83.00	94.00	77.00	97.00
FILE PRINT DATE ------->	31-Jan-92								
antimony		11.80 BJ	20.60 J	9.60 BJ	15.30 J	4.40 UJ	3.90 UJ	4.70 UJ	3.80 UJ
arsenic		2.70 J	6.00 J	5.00 J	2.70 J	0.57 B	1.50 B	0.25 UJ	1.60 BJ
barium		149.00	258.00	107.00	56.70	27.80 B	32.60 B	66.40	7.60 B
beryllium		1.20	4.00	2.50	1.30	0.33 B	0.49 B	0.96 B	0.20 B
cadmium		0.92 U	0.99 B	0.85 U	0.80 U	0.93 U	0.82 U	0.98 U	0.79 U
chromium		16.60	17.80	33.10	11.00	4.70	8.90	7.50	3.30 J
cobalt		6.50 B	11.40	8.30 B	4.20 B	2.50 B	2.70 B	4.40 B	2.10 B
copper		2440.00 J	524.00 J	287.00 J	271.00 J	13.20 U	89.60	13.60 U	1.20 U
lead		462.00 J	403.00 J	319.00 J	352.00 J	2.30 U	40.40	0.95 UJ	0.64 U
mercury		0.09 J	0.46 J	0.71 J	0.05 U	0.18 U	0.16 U	0.06 U	0.15 U
molybdenum		1.60 U	3.20 B	1.50 U	1.40 U	1.60 U	1.40 U	1.70 U	1.40 U
nickel		20.60	35.40	17.20	6.00 B	2.10 U	5.40 B	2.20 U	1.80 U
selenium		0.26 B	0.23 U	0.50 U	0.20 U	0.23 U	0.20 U	0.25 U	0.19 UJ
silver		0.69 U	2.40 U	1.50 U	0.60 U	1.00 U	1.40 U	0.74 U	0.59 U
thallium		0.44 U	0.57 B	0.45 U	0.47 U	0.23 U	0.20 U	0.50 U	0.19 UJ
vanadium		50.10	70.90	55.20	24.60	20.60	19.30	28.80	7.30 B
zinc		936.00 J	014.00 J	467.00 J	260.00 J	16.80 U	103.00 U	17.10 U	9.30 U
cyanide		1.00 U	1.00 U	1.00 UJ	1.00 UJ	1.00 U	1.00 U	1.00 UJ	1.00 U

INORGANICS DATA	SAMPLE ID	NS2-MW12-SO1-5	
CLIENT - IT CORPORATION	MATRIX	SOLID	
SITE NAME - SAN DIEGO NAVSTA	DILUTION	1.00	
PREPARATION DATE - 17 JULY 91	BLANK ID	NS2-FB-2-7-91	
FILE ID - IS2-791	UNITS	mg/kg	
	% SOLIDS	95.00	
FILE PRINT DATE ------>	31-Jan-92		
antimony		7.70	BJ
arsenic		3.50	J
barium		52.90	
beryllium		0.80	B
cadmium		0.82	U
chromium		19.10	J
cobalt		3.90	B
copper		51.00	
lead		97.30	
mercury		0.21	
molybdenum		1.40	U
nickel		6.10	B
selenium		0.20	UJ
silver		0.76	B
thallium		0.20	UJ
vanadium		23.30	
zinc		132.00	
cyanide		1.00	U

INORGANICS DATA	SAMPLE ID	NS2-MW5-GW1		NS2-ER-2-4-91		NS2-ER-2-5-91		NS2-ER-2-6-91		NS2-ER-2-7-91		NS2-ER-2-15-91		NS2-FB-2-5-91		NS2-FB-2-7-91	
CLIENT - IT CORPORATION	MATRIX	WATER		WATER		WATER		WATER		WATER		WATER		WATER		WATER	
SITE NAME - SAN DIEGO NAVSTA	DILUTION	1.00		1.00		1.00		1.00		1.00		1.00		1.00		1.00	
PREPARATION DATE - 17 JULY 91	BLANK ID	NS2-ER-2-15-91												02/07/91		02/09/91	
FILE ID - I2-791	UNITS	ug/l		ug/l		ug/l		ug/l		ug/l		ug/l		ug/l		ug/l	
FILE PRINT DATE ------>	31-Jan-92																
antimony		61.00		19.00	U	19.00	U	19.00	U	19.00	U	19.00	U	19.00	U	19.00	U
arsenic		1.00	U	1.00	U	2.00	U	2.00	U	2.00	U	1.00	U	2.00	U	2.00	U
barium		76.10	B	6.20	B	8.10	B	7.40	B	4.00	U	4.00	U	7.40	B	4.00	U
beryllium		1.00	U	1.00	U	1.00	U	1.00	U	1.00	U	1.00	U	1.00	U	1.00	U
cadmium		4.00	U	4.00	U	4.00	U	4.00	U	4.00	U	4.00	U	4.00	U	4.00	U
chromium		4.00	U	4.00	U	4.00	U	4.00	U	4.00	U	4.00	U	4.00	U	4.00	U
cobalt		5.00	U	5.00	U	5.00	U	5.00	U	5.00	U	5.00	U	5.00	U	5.00	U
copper		6.70	U	113.00		48.70		38.90		11.30	B	6.00	U	21.90	B	12.60	B
lead		1.00	UJ	3.80		4.70		2.60	B	3.30		1.00	UJ	4.10		4.90	
mercury		0.23	U	0.20	U	0.20	U	0.20	U	0.20	U	0.20	U	0.20	U	0.20	U
molybdenum		21.20	BR	7.00	U	7.00	U	7.00	U	7.00	U	7.00	UR	7.00	U	7.00	U
nickel		9.00	U	13.80	B	9.00	U	9.00	U	9.00	U	9.00	U	9.00	U	9.00	U
selenium		12.00	BR	1.00	U	1.20	B	1.30	B	1.00	UJ	1.00	UR	1.30	B	1.00	UJ
silver		3.00	UR	5.80	B	4.40	B	6.20	B	3.00	U	3.00	U	4.00	B	3.00	U
thallium		10.00	UJ	2.00	U	1.00	U	1.00	U	1.00	U	1.00	UJ	1.00	U	1.00	U
vanadium		56.00		3.00	U	6.20	B	7.40	B	3.00	U	3.00	U	6.20	B	3.00	U
zinc		10.90	U	419.00		60.60		634.00		235.00		11.00	B	84.10		95.10	
cyanide		*		0.02	U	*		0.02	U	*		*		*		*	

NOTE:

* Not requested for analysis.

VOLATILE ORGANICS DATA	SAMPLE ID	NS3-MW3-GW1	NS3-MW5-GW1	NS3-MW4-GW1	NS3-FB-2-14-91	NS3-TB-2-14-91	VBLK1	VBLK2
CLIENT - IT CORPORATION	MATRIX	WATER	WATER	WATER	WATER	WATER	WATER	WATER
SITE - SAN DIEGO NAVSTA	DILUTION	1.00	1.00	1.00	1.00	1.00	1.00	1.00
PREPARATION DATE 13 JULY 91	BLANK ID	VBLK2	VBLK1	VBLK2	02/26/91	02/26/91	02/22/91	02/26/91
FILE ID - V3-791S								
FILE PRINT DATE------->	31-Jan-92							
carbon disulfide		6 J	5 UJ	8 J	5 U	5 U	5 U	5 U
1,1-dichloroethane		5 U	5 U	6	5 U	5 U	5 U	5 U
1,2-dichloroethene (total)		5 U	5 UJ	2 J	5 U	5 U	5 U	5 U
chloroform		5 U	5 U	2 BJ	8 B	5 U	5 U	2 J

VOLATILE ORGANICS DATA	SAMPLE ID	NS3-MW3-GW1	NS3-MW5-GW1	NS3-MW4-GW1	NS3-FB-2-14-91	NS3-TB-2-14-91	VBLK1	VBLK2
CLIENT - IT CORPORATION	MATRIX	WATER	WATER	WATER	WATER	WATER	WATER	WATER
SITE - SAN DIEGO NAVSTA	DILUTION	1.00	1.00	1.00	1.00	1.00	1.00	1.00
PREPARATION DATE 13 JULY 91	BLANK ID	VBLK2	VBLK1	VBLK2	02/26/91	02/26/91	02/22/91	02/26/91
FILE ID - V3-791								
FILE PRINT DATE-------->	31-Jan-92							
chloromethane		10 UJ	10 UJ	10 UJ	10 U	10 U	10 U	10 U
bromomethane		10 U	10 U	10 U	10 U	10 U	10 U	10 U
vinyl chloride		10 U	10 U	10 U	10 U	10 U	10 U	10 U
chloroethane		10 U	10 U	10 U	10 U	10 U	10 U	10 U
methylene chloride		5 UJ	5 UJ	5 UJ	4 BJ	5 B	9	6
acetone		10 UJ	10 UJ	10 UJ	10 U	10 U	10 U	10 U
carbon disulfide		6 J	5 UJ	8 J	5 U	5 U	5 U	5 U
1,1-dichloroethene		5 U	5 U	5 U	5 U	5 U	5 U	5 U
1,1-dichloroethane		5 U	5 U	6	5 U	5 U	5 U	5 U
1,2-dichloroethene (total)		5 U	5 UJ	2 J	5 U	5 U	5 U	5 U
chloroform		5 U	5 U	2 BJ	8 B	5 U	5 U	2 J
1,2-dichloroethane		5 U	5 U	5 U	5 U	5 U	5 U	5 U
2-butanone		10 U	10 U	10 U	10 U	10 U	10 U	10 U
1,1,1-trichloroethane		5 U	5 U	5 U	5 U	5 U	5 U	5 U
carbon tetrachloride		5 U	5 U	5 U	5 U	5 U	5 U	5 U
vinyl acetate		10 U	10 U	10 U	10 U	10 U	10 U	10 U
bromodichloromethane		5 U	5 U	5 U	3 J	5 U	5 U	5 U
1,2-dichloropropane		5 U	5 U	5 U	5 U	5 U	5 U	5 U
cis-1,3-dichloropropene		5 UJ	5 UJ	5 UJ	5 U	5 U	5 U	5 U
trichloroethene		5 U	5 U	5 U	5 U	5 U	5 U	5 U
dibromochloromethane		5 U	5 U	5 U	3 J	5 U	5 U	5 U
1,1,2-trichloroethane		5 U	5 U	5 U	5 U	5 U	5 U	5 U
benzene		5 UJ	5 UJ	5 UJ	5 UJ	5 UJ	5 U	5 U
trans-1,3-dichloropropene		5 U	5 U	5 U	5 U	5 U	5 U	5 U
bromoform		5 UJ	5 UJ	5 UJ	1 J	5 U	5 U	5 U
4-methyl-2-pentanone		10 UJ	10 UJ	10 UJ	10 U	10 U	10 U	10 U
2-hexanone		10 UJ	10 UJ	10 UJ	10 U	10 U	10 U	10 U
tetrachloroethene		5 U	5 U	5 U	5 U	5 U	5 U	5 U
1,1,2,2-tetrachloroethane		5 U	5 U	5 U	5 U	5 U	5 U	5 U
toluene		5 U	5 UJ	5 U	5 UJ	5 UJ	5 U	5 U
chlorobenzene		5 U	5 UJ	5 U	5 UJ	5 UJ	5 U	5 U
ethyl benzene		5 U	5 UJ	5 U	5 UJ	5 UJ	5 U	5 U
styrene		5 U	5 UJ	5 U	5 UJ	5 UJ	5 U	5 U
total xylenes		5 U	5 UJ	5 U	5 UJ	5 UJ	5 U	5 U

SEMIVOLATILE ORGANICS DATA	SAMPLE ID	NS3-MW3-GW1	NS3-MW4-GW1	NS3-MW5-GW1	NS3-FB-2-14-91	SBLK3	SBLK4
CLIENT - IT CORPORATION	MATRIX	WATER	WATER	WATER	WATER	WATER	WATER
SITE NAME - SAN DIEGO NAVSTA	DILUTION	1.00	1.00	1.00	1.00	1.00	1.00
PREPARATION DATE - 13 JULY 91	BLANK ID	SBLK4	SBLK4	SBLK3	SBLK4	03/06/91	03/18/91
FILE ID - SV3-791	UNITS	ug/l	ug/l	ug/l	ug/l	ug/l	ug/l
FILE PRINT DATE ---->	31-Jan-92						
phenol		10 U	10 U	10 U	10 U	10 U	10 U
bis(2-chloroethyl)ether		10 U	10 U	10 U	10 U	10 U	10 U
2-chlorophenol		10 U	10 U	10 U	10 U	10 U	10 U
1,3-dichlorobenzene		10 U	10 U	10 U	10 U	10 U	10 U
1,4-dichlorobenzene		10 U	10 U	10 U	10 U	10 U	10 U
benzyl alcohol		10 U	10 U	10 U	10 U	10 U	10 U
1,2-dichlorobenzene		10 U	10 U	10 U	10 U	10 U	10 U
2-methylphenol		10 U	10 U	10 U	10 U	10 U	10 U
bis(2-chloroisopropyl)ether		10 U	10 U	10 U	10 U	10 U	10 U
4-methylphenol		10 U	10 U	10 U	10 U	10 U	10 U
N-nitrosodipropylamine		10 U	10 U	10 U	10 U	10 U	10 U
hexachloroethane		10 U	10 U	10 U	10 U	10 U	10 U
nitrobenzene		10 U	10 U	10 U	10 U	10 U	10 U
isophorone		10 U	10 U	10 U	10 U	10 U	10 U
2-nitrophenol		10 U	10 U	10 U	10 U	10 U	10 U
2,4-dimethylphenol		10 U	10 U	10 U	10 U	10 U	10 U
benzoic acid		50 U	50 U	50 U	50 U	50 U	50 U
bis(2-chloroethoxy)methane		10 U	10 U	10 U	10 U	10 U	10 U
2,4-dichlorophenol		10 U	10 U	10 U	10 U	10 U	10 U
1,2,4-trichlorobenzene		10 U	10 U	10 U	10 U	10 U	10 U
naphthalene		10 U	10 U	10 U	10 U	10 U	10 U
4-chloroaniline		10 U	10 U	10 UJ	10 U	10 UJ	10 U
hexacholorobutadiene		10 U	10 U	10 U	10 U	10 U	10 U
4-chloro-3-methylphenol		10 U	10 U	10 U	10 U	10 U	10 U
2-methylnaphthalene		10 U	10 U	10 U	10 U	10 U	10 U
hexachlorocyclopentadiene		10 U	10 U	10 U	10 U	10 U	10 U
2,4,6-trichlorophenol		10 U	10 U	10 U	10 U	10 U	10 U
2,4,5-trichlorophenol		50 U	50 U	50 U	50 U	50 U	50 U
2-chloronaphthalene		10 U	10 U	10 U	10 U	10 U	10 U
2-nitroaniline		50 U	50 U	50 U	50 U	50 U	50 U
dimethyl phthalate		10 U	10 U	10 U	10 U	10 U	10 U
acenaphthylene		10 U	10 U	10 U	10 U	10 U	10 U
2,6-dinitrotoluene		10 U	10 U	10 U	10 U	10 U	10 U
3-nitroaniline		50 U	50 U	50 UJ	50 U	50 UJ	50 U
acenaphthene		10 U	10 U	10 U	10 U	10 U	10 U

SEMIVOLATILE ORGANICS DATA	SAMPLE ID	NS3-MW3-GW1	NS3-MW4-GW1	NS3-MW5-GW1	NS3-FB-2-14-91	SBLK3	SBLK4
CLIENT - IT CORPORATION	MATRIX	WATER	WATER	WATER	WATER	WATER	WATER
SITE NAME - SAN DIEGO NAVSTA	DILUTION	1.00	1.00	1.00	1.00	1.00	1.00
PREPARATION DATE - 13 JULY 91	BLANK ID	SBLK4	SBLK4	SBLK3	SBLK4	03/06/91	03/18/91
FILE ID - SV3-791	UNITS	ug/l	ug/l	ug/l	ug/l	ug/l	ug/l
FILE PRINT DATE ---->	31-Jan-92						
2,4-dinitrophenol		50 U	50 U	50 U	50 U	50 U	50 U
4-nitrophenol		50 U	50 U	50 U	50 U	50 U	50 U
dibenzofuran		10 U	10 U	10 U	10 U	10 U	10 U
2,4-dinitrotoluene		10 U	10 U	10 U	10 U	10 U	10 U
diethylphthalate		10 U	10 U	10 U	10 U	10 U	10 U
4-chlorophenyl phenyl ether		10 U	10 U	10 U	10 U	10 U	10 U
fluorene		10 U	10 U	10 U	10 U	10 U	10 U
4-nitroaniline		50 U	50 U	50 U	50 U	50 U	50 U
4,6-dinitro-2-methylphenol		50 U	50 U	50 U	50 U	50 U	50 U
N-nitrosodiphenylamine		10 U	10 U	10 U	10 U	10 U	10 U
4-bromophenyl phenyl ether		10 U	10 U	10 U	10 U	10 U	10 U
hexachlorobenzene		10 U	10 U	10 U	10 U	10 U	10 U
pentachlorophenol		50 U	50 U	50 U	50 U	50 U	50 U
phenanthrene		10 U	10 U	10 U	10 U	10 U	10 U
anthracene		10 U	10 U	10 U	10 U	10 U	10 U
di-n-butyl phthalate		10 U	10 U	10 U	10 U	10 U	10 U
fluoranthene		10 U	10 U	10 U	10 U	10 U	10 U
pyrene		10 U	10 U	10 U	10 U	10 U	10 U
butyl benzyl phthalate		10 U	10 U	10 U	10 U	10 U	10 U
3,3'-dichlorobenzidine		20 U	20 U	20 U	20 U	20 U	20 U
benzo(a)anthracene		10 U	10 U	10 U	10 U	10 U	10 U
chrysene		10 U	10 U	10 U	10 U	10 U	10 U
bis(2-ethylhexyl)phthalate		10 U	10 U	10 U	10 U	10 U	10 U
di-n-octyl phthalate		10 U	10 U	10 U	10 U	10 U	10 U
benzo(b)fluoranthene		10 U	10 U	10 U	10 U	10 U	10 U
benzo(k)fluoranthene		10 U	10 U	10 U	10 U	10 U	10 U
benzo(a)pyrene		10 U	10 U	10 U	10 U	10 U	10 U
indeno(1,2,3-cd)pyrene		10 U	10 U	10 U	10 U	10 U	10 U
dibenzo(a,h)anthracene		10 U	10 U	10 U	10 U	10 U	10 U
benzo(g,h,i,)perylene		10 U	10 U	10 U	10 U	10 U	10 U

PESTICIDE/PCB DATA	SAMPLE ID	NS3-MW3-GW1	NS3-MW4-GW1	NS3-MW5-GW1	NS3-FB-2-14-91	MB1	MB2
CLIENT NAME - IT CORPORATION	MATRIX	WATER	WATER	WATER	WATER	WATER	WATER
SITE NAME - SAN DIEGO NAVSTA	DILUTION	1.00	1.00	1.00	1.00	1.00	10.00
PREPARATION DATE - 13 JULY 91	BLANK ID	MB2	MB2	MB1	MB2	03/08/91	03/27/91
FILE ID - P3-791	UNITS	ug/l	ug/l	ug/l	ug/l	ug/l	ug/l
FILE PRINT DATE ------>	31-Jan-92						
alpha-BHC		0.050 U	0.050 U	0.050 U	0.050 U	0.050 U	0.500 U
beta-BHC		0.050 U	0.050 U	0.050 U	0.050 U	0.050 U	0.500 U
delta-BHC		0.050 U	0.050 U	0.050 U	0.050 U	0.050 U	0.500 U
gamma-BHC (lindane)		0.050 U	0.050 U	0.050 U	0.050 U	0.050 U	0.500 U
heptachlor		0.050 U	0.050 U	0.050 U	0.050 U	0.050 U	0.500 U
aldrin		0.050 U	0.050 U	0.050 U	0.050 U	0.050 U	0.500 U
heptachlor epoxide		0.050 U	0.050 U	0.050 U	0.050 U	0.050 U	0.500 U
endosulfan I		0.050 U	0.050 U	0.050 U	0.050 U	0.050 U	0.500 U
dieldrin		0.100 U	0.100 U	0.100 U	0.100 U	0.100 U	1.000 U
4,4'-DDE		0.100 U	0.100 U	0.100 U	0.100 U	0.100 U	1.000 U
endrin		0.100 U	0.100 U	0.100 U	0.100 U	0.100 U	1.000 U
endosulfan II		0.100 U	0.100 U	0.100 U	0.100 U	0.100 U	1.000 U
4,4'-DDD		0.100 U	0.100 U	0.100 U	0.100 U	0.100 U	1.000 U
endosulfan sulfate		0.100 U	0.100 U	0.100 U	0.100 U	0.100 U	1.000 U
4,4'-DDT		0.100 U	0.100 U	0.100 U	0.100 U	0.100 U	1.000 U
methoxychlor		0.500 U	0.500 U	0.500 U	0.500 U	0.500 U	5.000 U
endrin ketone		0.100 U	0.100 U	0.100 U	0.100 U	0.100 U	1.000 U
alpha-chlordane		0.500 U	0.500 U	0.500 U	0.500 U	0.500 U	5.000 U
gamma-chlordane		0.500 U	0.500 U	0.500 U	0.500 U	0.500 U	5.000 U
toxaphene		1.000 U	1.000 U	1.000 U	1.000 U	1.000 U	10.000 U
AROCLOR-1016		0.500 U	0.500 U	0.500 U	0.500 U	0.500 U	5.000 U
AROCLOR-1221		0.500 U	0.500 U	0.500 U	0.500 U	0.500 U	5.000 U
AROCLOR-1232		0.500 U	0.500 U	0.500 U	0.500 U	0.500 U	5.000 U
AROCLOR-1242		0.500 U	0.500 U	0.500 U	0.500 U	0.500 U	5.000 U
AROCLOR-1248		0.500 U	0.500 U	0.500 U	0.500 U	0.500 U	5.000 U
AROCLOR-1254		1.000 U	1.000 U	1.000 U	1.000 U	1.000 U	10.000 U
AROCLOR-1260		1.000 U	1.000 U	1.000 U	1.000 U	1.000 U	10.000 U

INORGANICS DATA	SAMPLE ID	NS3-MW3-GW1		NS3-MW4-GW1		NS3-MW5-GW1		NS3-FB-2-14-91	
CLIENT - IT CORPORATION	MATRIX	WATER		WATER		WATER		WATER	
SITE NAME - SAN DIEGO NAVSTA	DILUTION	1.00		1.00		1.00		1.00	
PREPARATION DATE - 15 JULY 91	BLANK ID	NS3FB21491		NS3FB21491		NS3FB21491		02/16/91	
FILE ID - I3-791	UNITS	ug/l		ug/l		ug/l		ug/l	
FILE PRINT DATE ------>	31-Jan-92								
antimony		66.30		68.10		69.50		19.00	U
arsenic		13.00	B	1.00	UJ	5.10	BJ	1.00	U
barium		69.30	B	95.60	B	72.70	B	8.80	B
beryllium		1.00	U	1.00	U	1.00	U	1.00	U
cadmium		4.00	U	13.40		4.00	U	4.00	U
chromium		4.00	U	5.10	B	4.00	U	4.00	U
cobalt		5.00	U	5.20	B	5.00	U	5.00	U
copper		6.00	UJ	44.90	UJ	6.00	UJ	14.80	BJ
lead		10.00	U	1.00	UJ	1.00	UJ	1.00	U
mercury		0.20	U	0.20	U	0.20	U	0.20	U
molybdenum		10.40	B	7.70	B	22.80	B	7.00	U
nickel		13.70	B	9.00	U	9.00	U	9.00	U
selenium		10.00	UJ	1.00	UJ	1.00	UJ	1.00	UJ
silver		3.00	U	3.00	U	8.60	UR	4.00	B
thallium		10.00	UJ	1.00	UJ	1.00	UJ	1.00	UJ
vanadium		56.40	U	60.80	U	31.30	U	34.00	B
zinc		2.00	U	11.90	U	31.80	U	17.40	B

VOLATILE ORGANICS DATA	SAMPLE ID	NS4-BH1-SO1-5	NS4-BH1-SO2-10	NS4-MW3-SO1-5	NS4-SS1-SO1	NS4-WAER	NS4-ER-1-28-91	NS4-TB-1-24-91	DPDO-TB-1-28-91
CLIENT NAME - IT CORPORATION	MATRIX	SOLID	SOLID	SOLID	SOLID	SOLID	SOLID	SOLID	SOLID
SITE - SAN DIEGO NAVSTA	DILUTION	1.00	1.00	1.00	1.00	1.00	1.00	1.00	1.00
PREPARATION DATE 16 JULY 91	BLANK ID	VBLK1	VBLK1	VBLK2	VBLK4A	VBLK1	VBLK4	VBLK1	VBLK2
FILE ID - VS4-791	UNITS	ug/kg	ug/kg	ug/kg	ug/kg	ug/kg	ug/kg	ug/kg	ug/kg
	% SOLIDS	87	84	92	75	100	100	100	100
FILE PRINT DATE---------->	31-Jan-92								
chloromethane		11 U	12 U	11 U	13 U	10 U	10 U	10 U	10 U
bromomethane		11 U	12 U	11 U	13 U	10 U	10 U	10 U	10 U
vinyl chloride		11 U	12 U	11 U	13 U	10 U	10 U	10 U	10 U
chloroethane		11 U	12 U	11 U	13 U	10 U	10 U	10 U	10 U
methylene chloride		8 U	17 U	27 U	10 U	2 BJ	5 B	4 BJ	5 B
acetone		11 U	39 U	13 U	13 U	12	11 B	10 U	10 U
carbon disulfide		6 U	4 J	5 U	7 U	5 U	5 U	5 U	5 U
1,1-dichloroethene		6 U	6 U	5 U	7 U	5 U	5 U	5 U	5 U
1,1-dichloroethane		6 U	6 U	5 U	7 U	5 U	5 U	5 U	5 U
1,2-dichloroethene (total)		6 U	6 U	5 U	7 U	5 U	5 U	5 U	5 U
chloroform		6 U	6 U	5 U	7 U	9	8	5 U	5 U
1,2-dichloroethane		6 U	6 U	5 U	7 U	5 U	5 U	5 U	5 U
2-butanone (MEK)		11 U	12 U	11 U	13 U	10 U	10 U	10 U	10 U
1,1,1-trichloroethane		6 U	6 U	5 U	7 U	5 U	5 U	5 U	5 U
carbon tetrachloride		6 U	6 U	5 U	7 U	5 U	5 U	5 U	5 U
vinyl acetate		11 U	12 U	11 U	13 U	10 U	10 U	10 U	10 U
bromodichloromethane		6 U	6 U	5 U	7 U	6	10	5 U	5 U
1,2-dichloropropane		6 U	6 U	5 U	7 U	5 U	5 U	5 U	5 U
cis-1,3-dichloropropene		6 U	6 U	5 U	7 U	5 U	5 U	5 U	5 U
trichloroethene (TCE)		6 U	6 U	5 U	7 U	5 U	5 U	5 U	5 U
dibromochloromethane		6 U	6 U	5 U	7 U	6	8	5 U	5 U
1,1,2-trichloroethane		6 U	6 U	5 U	7 U	5 U	5 U	5 U	5 U
benzene		6 U	6 U	5 U	7 U	5 U	5 U	5 U	5 U
trans-1,3-dichloropropene		6 U	6 U	5 U	7 U	5 U	5 U	5 U	5 U
bromoform		6 U	6 U	5 U	7 U	5 U	2 J	5 U	5 U
4-methyl-2-pentanone		11 U	12 U	11 U	13 U	10 U	10 U	10 U	10 U
2-hexanone (MBK)		11 U	12 U	11 U	13 U	10 U	10 U	10 U	10 U
tetrachloroethene (PCE)		6 U	6 U	5 U	7 U	5 U	5 U	5 U	5 U
1,1,2,2-tetrachloroethane		6 U	6 U	5 U	7 U	5 U	5 U	5 U	5 U
toluene		6 U	6 U	5 U	7 U	5 U	5 U	5 U	5 U
chlorobenzene		6 U	6 U	5 U	7 U	5 U	5 U	5 U	5 U
ethyl benzene		6 U	6 U	5 U	7 U	5 U	5 U	5 U	5 U
styrene		6 U	6 U	5 U	7 U	5 U	5 U	5 U	5 U
total xylenes		6 U	6 U	5 U	7 U	5 U	5 U	5 U	5 U

VOLATILE ORGANICS DATA	SAMPLE ID	VBLK1	VBLK2	VBLK4	VBLK4A
CLIENT NAME - IT CORPORATION	MATRIX	SOLID	SOLID	SOLID	SOLID
SITE - SAN DIEGO NAVSTA	DILUTION	1.00	1.00	1.00	1.00
PREPARATION DATE 16 JULY 91	BLANK ID	02/03/91	02/06/91	02/06/91	02/21/91
FILE ID - VS4-791	UNITS	ug/kg	ug/kg	ug/kg	ug/kg
	% SOLIDS	100	100	100	100
FILE PRINT DATE---------->	31-Jan-92				
chloromethane		10 U	10 U	10 U	10 U
bromomethane		10 U	10 U	10 U	10 U
vinyl chloride		10 U	10 U	10 U	10 U
chloroethane		10 U	10 U	10 U	10 U
methylene chloride		4 J	5	6	4 J
acetone		10 U	10 U	3 J	10 U
carbon disulfide		5 U	5 U	5 U	5 U
1,1-dichloroethene		5 U	5 U	5 U	5 U
1,1-dichloroethane		5 U	5 U	5 U	5 U
1,2-dichloroethene (total)		5 U	5 U	5 U	5 U
chloroform		5 U	5 U	5 U	5 U
1,2-dichloroethane		5 U	5 U	5 U	5 U
2-butanone (MEK)		10 U	10 U	10 U	10 U
1,1,1-trichloroethane		5 U	5 U	5 U	5 U
carbon tetrachloride		5 U	5 U	5 U	5 U
vinyl acetate		10 U	10 U	10 U	10 U
bromodichloromethane		5 U	5 U	5 U	5 U
1,2-dichloropropane		5 U	5 U	5 U	5 U
cis-1,3-dichloropropene		5 U	5 U	5 U	5 U
trichloroethene (TCE)		5 U	5 U	5 U	5 U
dibromochloromethane		5 U	5 U	5 U	5 U
1,1,2-trichloroethane		5 U	5 U	5 U	5 U
benzene		5 U	5 U	5 U	5 U
trans-1,3-dichloropropene		5 U	5 U	5 U	5 U
bromoform		5 U	5 U	5 U	5 U
4-methyl-2-pentanone		10 U	10 U	10 U	10 U
2-hexanone (MBK)		10 U	10 U	10 U	10 U
tetrachloroethene (PCE)		5 U	5 U	5 U	5 U
1,1,2,2-tetrachloroethane		5 U	5 U	5 U	5 U
toluene		5 U	5 U	5 U	5 U
chlorobenzene		5 U	5 U	5 U	5 U
ethyl benzene		5 U	5 U	5 U	5 U
styrene		5 U	5 U	5 U	5 U
total xylenes		5 U	5 U	5 U	5 U

VOLATILE ORGANICS DATA	NS4-BH1-SO1-5	NS4-BH1-SO2-10	NS4-MW3-SO1-5	NS4-SS1-SO1	NS4-WAER	NS4-ER-1-28-91	NS4-TB-1-24-91	DPDO-TB-1-28-91	VBLK1
CLIENT NAME - IT CORPORATION	SOLID	SOLID	SOLID	SOLID	SOLID	SOLID	SOLID	SOLID	SOLID
SITE - SAN DIEGO NAVSTA	1.00	1.00	1.00	1.00	1.00	1.00	1.00	1.00	1.00
PREPARATION DATE 16 JULY 91	VBLK1	VBLK1	VBLK2	VBLK4A	VBLK1	VBLK4	VBLK1	VBLK2	02/03/91
FILE ID - VS4-791S	ug/kg	ug/kg	ug/kg	ug/kg	ug/kg	ug/kg	ug/kg	ug/kg	ug/kg
	87	84	92	75	100	100	100	100	100
FILE PRINT DATE---------->									
carbon disulfide	6 U	4 J	5 U	7 U	5 U	5 U	5 U	5 U	5

VOLATILE ORGANICS DATA	VBLK2	VBLK4	VBLK4A
CLIENT NAME - IT CORPORATION	SOLID	SOLID	SOLID
SITE - SAN DIEGO NAVSTA	1.00	1.00	1.00
PREPARATION DATE 16 JULY 91	02/06/91	02/06/91	02/21/91
FILE ID - VS4-791S	ug/kg	ug/kg	ug/kg
	100	100	100
FILE PRINT DATE---------->			
carbon disulfide	U 5 U	5 U	5 U

VOLATILE ORGANICS DATA	SAMPLE ID	NS4-MW02-GW1	NS4-ER-2-11-91	NS4-TB-2-11-91	VBLK3	VBLK5
CLIENT - IT CORPORATION	MATRIX	WATER	WATER	WATER	WATER	WATER
SITE - SAN DIEGO NAVSTA	DILUTION	1.00	1.00	1.00	1.00	1.00
PREPARATION DATE 16 JULY 91	BLANK ID	VBLK5	VBLK3	VBLK3	02/20/91	02/21/91
FILE ID - V4-791S						
FILE PRINT DATE------->	31-Jan-92					
trichloroethene		55	5 U	5 U	5 U	5 U

VOLATILE ORGANICS DATA	SAMPLE ID	NS4-MW02-GW1	NS4-ER-2-11-91	NS4-TB-2-11-91	VBLK3	VBLK5
CLIENT - IT CORPORATION	MATRIX	WATER	WATER	WATER	WATER	WATER
SITE - SAN DIEGO NAVSTA	DILUTION	1.00	1.00	1.00	1.00	1.00
PREPARATION DATE 16 JULY 91	BLANK ID	VBLK5	VBLK3	VBLK3	02/20/91	02/21/91
FILE ID - V4-791						
FILE PRINT DATE------->	31-Jan-92					
chloromethane		10 U	10 U	10 U	10 U	10 U
bromomethane		10 U	10 U	10 U	10 U	10 U
vinyl chloride		10 U	10 U	10 U	10 U	10 U
chloroethane		10 U	10 U	10 U	10 U	10 U
methylene chloride		5 U	2 BJ	4 BJ	20	9
acetone		10 U	11 B	6 BJ	7 J	4 J
carbon disulfide		5 U	5 U	5 U	5 U	5 U
1,1-dichloroethene		5 U	5 U	5 U	5 U	5 U
1,1-dichloroethane		5 U	5 U	5 U	5 U	5 U
1,2-dichloroethene (total)		5 U	5 U	5 U	5 U	5 U
chloroform		5 U	6	1 J	5 U	5
1,2-dichloroethane		5 U	5 U	5 U	5 U	5 U
2-butanone		10 U	10 U	10 U	10 U	10 U
1,1,1-trichloroethane		5 U	5 U	5 U	5 U	5 U
carbon tetrachloride		5 U	5 U	5 U	5 U	5 U
vinyl acetate		10 U	10 U	10 U	10 U	10 U
bromodichloromethane		5 U	8	5 U	5 U	5 U
1,2-dichloropropane		5 U	5 U	5 U	5 U	5 U
cis-1,3-dichloropropene		5 U	5 U	5 U	5 U	5 U
trichloroethene		55	5 U	5 U	5 U	5 U
dibromochloromethane		5 U	9	5 U	5 U	5 U
1,1,2-trichloroethane		5 U	5 U	5 U	5 U	5 U
benzene		5 U	5 U	5 U	5 U	5 U
trans-1,3-dichloropropene		5 U	5 U	5 U	5 U	5 U
bromoform		5 U	3 J	5 U	5 U	5 U
4-methyl-2-pentanone		10 U	10 U	10 U	10 U	10 U
2-hexanone		10 U	10 U	10 U	10 U	10 U
tetrachloroethene		5 U	5 U	5 U	5 U	5 U
1,1,2,2-tetrachloroethane		5 U	5 U	5 U	5 U	5 U
toluene		5 U	5 U	5 U	5 U	5 U
chlorobenzene		5 U	5 U	5 U	5 U	5 U
ethyl benzene		5 U	5 U	5 U	5 U	5 U
styrene		5 U	5 U	5 U	5 U	5 U
total xylenes		5 U	5 U	5 U	5 U	5 U

SEMIVOLATILE ORGANICS DATA	SAMPLE ID	NS4-BH1-SO1-5	NS4-BH1-SO2-10	NS4-MW3-SO1-5	NS4-SS1-SO1	SBLK1	SBLK1A	SBLK2
CLIENT - IT CORPORATION	MATRIX	SOLID	SOLID	SOLID	SOLID	SOLID	SOLID	SOLID
SITE NAME - SAN DIEGO NAVSTA	DILUTION	1.00	1.00	20.00	1.00	1.00	1.00	1.00
PREPARATION DATE - 16 JULY 91	BLANK ID	SBLK1	SBLK1	SBLK2	SBLK1A	02/05/91	03/16/91	02/14/91
FILE ID - SVS4-791	UNITS	ug/kg	ug/kg	ug/kg	ug/kg	ug/kg	ug/kg	ug/kg
	% SOLIDS	87	84	92	75	100	100	100
FILE PRINT DATE ------>	31-Jan-92							
phenol		379 U	393 U	7174 U	440 U	330 U	330 U	330 U
bis(2-chloroethyl)ether		379 U	393 U	7174 U	440 U	330 U	330 U	330 U
2-chlorophenol		379 U	393 U	7174 U	440 U	330 U	330 U	330 U
1,3-dichlorobenzene		379 U	393 U	7174 U	440 U	330 U	330 U	330 U
1,4-dichlorobenzene		379 U	393 U	7174 U	440 U	330 U	330 U	330 U
benzyl alcohol		379 U	393 U	7174 U	440 U	330 U	330 U	330 U
1,2-dichlorobenzene		379 U	393 U	7174 U	440 U	330 U	330 U	330 U
2-methylphenol		379 U	393 U	7174 U	440 U	330 U	330 U	330 U
bis(2-chloroisopropyl)ether		379 U	393 U	7174 U	440 U	330 U	330 U	330 U
4-methylphenol		379 U	393 U	7174 U	440 U	330 U	330 U	330 U
N-nitrosodipropylamine		379 U	393 U	7174 U	440 U	330 U	330 U	330 U
hexachloroethane		379 U	393 U	7174 U	440 U	330 U	330 U	330 U
nitrobenzene		379 U	393 U	7174 U	440 U	330 U	330 U	330 U
isophorone		379 U	393 U	7174 U	440 U	330 U	330 U	330 U
2-nitrophenol		379 U	393 U	7174 U	440 U	330 U	330 U	330 U
2,4-dimethylphenol		379 U	393 U	7174 U	440 U	330 U	330 U	330 U
benzoic acid		1839 U	1905 U	34783 U	93 J	1600 U	1600 U	1600 U
bis(2-chloroethoxy)methane		379 U	393 U	7174 U	440 U	330 U	330 U	330 U
2,4-dichlorophenol		379 U	393 U	7174 U	440 U	330 U	330 U	330 U
1,2,4-trichlorobenzene		379 U	393 U	7174 U	440 U	330 U	330 U	330 U
naphthalene		379 U	393 U	7174 U	440 U	330 U	330 U	330 U
4-chloroaniline		379 U	393 U	7174 U	440 U	330 U	330 U	330 U
hexacholorobutadiene		379 U	393 U	7174 U	440 U	330 U	330 U	330 U
4-chloro-3-methylphenol		379 U	393 U	7174 U	440 U	330 U	330 U	330 U
2-methylnaphthalene		379 U	393 U	7174 U	440 U	330 U	330 U	330 U
hexachlorocyclopentadiene		379 U	393 U	7174 U	440 U	330 U	330 U	330 U
2,4,6-trichlorophenol		379 U	393 U	7174 U	440 U	330 U	330 U	330 U
2,4,5-trichlorophenol		1839 U	1905 U	34783 U	2133 U	1600 U	1600 U	1600 U
2-chloronaphthalene		379 U	393 U	7174 U	440 U	330 U	330 U	330 U
2-nitroaniline		1839 U	1905 U	34783 U	2133 U	1600 U	1600 U	1600 U
dimethyl phthalate		379 U	393 U	7174 U	440 U	330 U	330 U	330 U
acenaphthylene		379 U	393 U	7174 U	80 J	330 U	330 U	330 U
2,6-dinitrotoluene		379 U	393 U	7174 U	440 U	330 U	330 U	330 U
3-nitroaniline		1839 U	1905 U	34783 U	2133 U	1600 U	1600 U	1600 U

SEMIVOLATILE ORGANICS DATA	SAMPLE ID	NS4-BH1-SO1-5	NS4-BH1-SO2-10	NS4-MW3-SO1-5	NS4-SS1-SO1	SBLK1	SBLK1A	SBLK2
CLIENT - IT CORPORATION	MATRIX	SOLID	SOLID	SOLID	SOLID	SOLID	SOLID	SOLID
SITE NAME - SAN DIEGO NAVSTA	DILUTION	1.00	1.00	20.00	1.00	1.00	1.00	1.00
PREPARATION DATE - 16 JULY 91	BLANK ID	SBLK1	SBLK1	SBLK2	SBLK1A	02/05/91	03/16/91	02/14/91
FILE ID - SVS4-791	UNITS	ug/kg	ug/kg	ug/kg	ug/kg	ug/kg	ug/kg	ug/kg
	% SOLIDS	87	84	92	75	100	100	100
FILE PRINT DATE ------->	31-Jan-92							
acenaphthene		379 U	393 U	7174 U	440 U	330 U	330 U	330 U
2,4-dinitrophenol		1839 U	1905 U	34783 U	2133 U	1600 U	1600 U	1600 U
4-nitrophenol		1839 U	1905 U	34783 U	2133 U	1600 U	1600 U	1600 U
dibenzofuran		379 U	393 U	7174 U	440 U	330 U	330 U	330 U
2,4-dinitrotoluene		379 U	393 U	7174 U	440 U	330 U	330 U	330 U
diethylphthalate		379 U	393 U	91000	440 U	330 U	330 U	330 U
4-chlorophenyl phenyl ether		379 U	393 U	7174 U	440 U	330 U	330 U	330 U
fluorene		379 U	393 U	7174 U	440 U	330 U	330 U	330 U
4-nitroaniline		1839 U	1905 U	34783 U	2133 U	1600 U	1600 U	1600 U
4,6-dinitro-2-methylphenol		1839 U	1905 U	34783 U	2133 U	1600 U	1600 U	1600 U
N-nitrosodiphenylamine		379 U	393 U	7174 U	440 U	330 U	330 U	330 U
4-bromophenyl phenyl ether		379 U	393 U	7174 U	440 U	330 U	330 U	330 U
hexachlorobenzene		379 U	393 U	7174 U	440 U	330 U	330 U	330 U
pentachlorophenol		1839 U	1905 U	34783 U	2133 U	1600 U	1600 U	1600 U
phenanthrene		379 U	393 U	7174 U	200 J	330 U	330 U	330 U
anthracene		379 U	393 U	7174 U	51 J	330 U	330 U	330 U
di-n-butyl phthalate		379 U	393 U	7174 U	440 U	330 U	330 U	330 U
fluoranthene		140 J	393 U	7174 U	400 J	330 U	330 U	330 U
pyrene		220 J	393 U	7174 U	980 J	330 U	330 U	330 U
butyl benzyl phthalate		379 U	393 U	7174 U	440 U	330 U	330 U	330 U
3,3'-dichlorobenzidine		759 U	786 U	14348 U	880 U	660 U	660 U	660 U
benzo(a)anthracene		110 J	393 U	7174 U	220 J	330 U	330 U	330 U
chrysene		320 J	393 U	7174 U	460	330 U	330 U	330 U
bis(2-ethylhexyl)phthalate		1200	393 U	7174 U	420 J	330 U	330 U	330 U
di-n-octyl phthalate		379 U	393 U	7174 U	440 U	330 U	330 U	330 U
benzo(b)fluoranthene		680	393 U	7174 U	360 J	330 U	330 U	330 U
benzo(k)fluoranthene		490	393 U	7174 U	450	330 U	330 U	330 U
benzo(a)pyrene		740	393 U	7174 U	310 J	330 U	330 U	330 U
indeno(1,2,3-cd)pyrene		280 J	393 U	7174 U	240 J	330 U	330 U	330 U
dibenzo(a,h)anthracene		88 J	393 U	7174 U	91 J	330 U	330 U	330 U
benzo(g,h,i,)perylene		320 J	393 U	7174 U	380 J	330 U	330 U	330 U

SEMIVOLATILE ORGANICS DATA	SAMPLE ID	NS4-MW02-GW1	NS4-WAER	NS4-ER-1-28-91	NS4-ER-2-11-91	SBLK1	SBLK1A	SBLK2
CLIENT - IT CORPORATION	MATRIX	WATER	WATER	WATER	WATER	WATER	WATER	WATER
SITE NAME - SAN DIEGO NAVSTA	DILUTION	1.00	1.00	1.00	1.00	1.00	1.00	0.50
PREPARATION DATE - 16 JULY 91	BLANK ID	SBLK1	SBLK1A	SBLK2	SBLK1	02/21/91	02/01/91	02/13/91
FILE ID - SV4-791S	UNITS	ug/l	ug/l	ug/l	ug/l	ug/l	ug/l	ug/l
FILE PRINT DATE ---->	31-Jan-92							
phenol		10 U	10 U	10 U	3 J	10 U	10 U	5 U

SEMIVOLATILE ORGANICS DATA	SAMPLE ID	NS4-MW02-GW1	NS4-WAER	NS4-ER-1-28-91	NS4-ER-2-11-91	SBLK1	SBLK1A	SBLK2
CLIENT - IT CORPORATION	MATRIX	WATER	WATER	WATER	WATER	WATER	WATER	WATER
SITE NAME - SAN DIEGO NAVSTA	DILUTION	1.00	1.00	1.00	1.00	1.00	1.00	0.50
PREPARATION DATE - 16 JULY 91	BLANK ID	SBLK1	SBLK1A	SBLK2	SBLK1	02/21/91	02/01/91	02/13/91
FILE ID - SV4-791	UNITS	ug/l	ug/l	ug/l	ug/l	ug/l	ug/l	ug/l
FILE PRINT DATE ——>	31-Jan-92							
phenol		10 U	10 U	10 U	3 J	10 U	10 U	5 U
bis(2-chloroethyl)ether		10 U	10 U	10 U	10 U	10 U	10 U	5 U
2-chlorophenol		10 U	10 U	10 U	10 U	10 U	10 U	5 U
1,3-dichlorobenzene		10 U	10 U	10 U	10 U	10 U	10 U	5 U
1,4-dichlorobenzene		10 U	10 U	10 U	10 U	10 U	10 U	5 U
benzyl alcohol		10 U	10 U	10 U	10 U	10 U	10 U	5 U
1,2-dichlorobenzene		10 U	10 U	10 U	10 U	10 U	10 U	5 U
2-methylphenol		10 U	10 U	10 U	10 U	10 U	10 U	5 U
bis(2-chloroisopropyl)ether		10 U	10 U	10 U	10 U	10 U	10 U	5 U
4-methylphenol		10 U	10 U	10 U	10 U	10 U	10 U	5 U
N-nitrosodipropylamine		10 U	10 U	10 U	10 U	10 U	10 U	5 U
hexachloroethane		10 U	10 U	10 U	10 U	10 U	10 U	5 U
nitrobenzene		10 U	10 U	10 U	10 U	10 U	10 U	5 U
isophorone		10 U	10 U	10 U	10 U	10 U	10 U	5 U
2-nitrophenol		10 U	10 U	10 U	10 U	10 U	10 U	5 U
2,4-dimethylphenol		10 U	10 U	10 U	10 U	10 U	10 U	5 U
benzoic acid		50 U	50 U	50 U	50 U	50 U	50 U	25 U
bis(2-chloroethoxy)methane		10 U	10 U	10 U	10 U	10 U	10 U	5 U
2,4-dichlorophenol		10 U	10 U	10 U	10 U	10 U	10 U	5 U
1,2,4-trichlorobenzene		10 U	10 U	10 U	10 U	10 U	10 U	5 U
naphthalene		10 U	10 U	10 U	10 U	10 U	10 U	5 U
4-chloroaniline		10 U	10 U	10 U	10 U	10 U	10 U	5 U
hexacholorobutadiene		10 U	10 U	10 U	10 U	10 U	10 U	5 U
4-chloro-3-methylphenol		10 U	10 U	10 U	10 U	10 U	10 U	5 U
2-methylnaphthalene		10 U	10 U	10 U	10 U	10 U	10 U	5 U
hexachlorocyclopentadiene		10 U	10 U	10 U	10 U	10 U	10 U	5 U
2,4,6-trichlorophenol		10 U	10 U	10 U	10 U	10 U	10 U	5 U
2,4,5-trichlorophenol		50 U	50 U	50 U	50 U	50 U	50 U	25 U
2-chloronaphthalene		10 U	10 U	10 U	10 U	10 U	10 U	5 U
2-nitroaniline		50 U	50 U	50 U	50 U	50 U	50 U	25 U
dimethyl phthalate		10 U	10 U	10 U	10 U	10 U	10 U	5 U
acenaphthylene		10 U	10 U	10 U	10 U	10 U	10 U	5 U
2,6-dinitrotoluene		10 U	10 U	10 U	10 U	10 U	10 U	5 U
3-nitroaniline		50 U	50 UJ	50 UJ	50 U	50 U	50 U	25 U
acenaphthene		10 U	10 U	10 U	10 U	10 U	10 U	5 U

SEMIVOLATILE ORGANICS DATA	SAMPLE ID	NS4-MW02-GW1	NS4-WAER	NS4-ER-1-28-91	NS4-ER-2-11-91	SBLK1	SBLK1A	SBLK2
CLIENT - IT CORPORATION	MATRIX	WATER	WATER	WATER	WATER	WATER	WATER	WATER
SITE NAME - SAN DIEGO NAVSTA	DILUTION	1.00	1.00	1.00	1.00	1.00	1.00	0.50
PREPARATION DATE - 16 JULY 91	BLANK ID	SBLK1	SBLK1A	SBLK2	SBLK1	02/21/91	02/01/91	02/13/91
FILE ID - SV4-791	UNITS	ug/l	ug/l	ug/l	ug/l	ug/l	ug/l	ug/l
FILE PRINT DATE ---->	31-Jan-92							
2,4-dinitrophenol		50 U	50 U	50 U	50 U	50 U	50 U	25 U
4-nitrophenol		50 U	50 U	50 U	50 U	50 U	50 U	25 U
dibenzofuran		10 U	10 U	10 U	10 U	10 U	10 U	5 U
2,4-dinitrotoluene		10 U	10 U	10 U	10 U	10 U	10 U	5 U
diethylphthalate		10 U	10 U	10 U	10 U	10 U	10 U	5 U
4-chlorophenyl phenyl ether		10 U	10 U	10 U	10 U	10 U	10 U	5 U
fluorene		10 U	10 U	10 U	10 U	10 U	10 U	5 U
4-nitroaniline		50 U	50 U	50 UJ	50 U	50 U	50 U	25 U
4,6-dinitro-2-methylphenol		50 U	50 U	50 U	50 U	50 U	50 U	25 U
N-nitrosodiphenylamine		10 U	10 U	10 U	10 U	10 U	10 U	5 U
4-bromophenyl phenyl ether		10 U	10 U	10 U	10 U	10 U	10 U	5 U
hexachlorobenzene		10 U	10 U	10 U	10 U	10 U	10 U	5 U
pentachlorophenol		50 U	50 U	50 U	50 U	50 U	50 U	25 U
phenanthrene		10 U	10 U	10 U	10 U	10 U	10 U	5 U
anthracene		10 U	10 U	10 U	10 U	10 U	10 U	5 U
di-n-butyl phthalate		10 U	10 U	10 U	10 U	10 U	10 U	5 U
fluoranthene		10 U	10 U	10 U	10 U	10 U	10 U	5 U
pyrene		10 U	10 U	10 U	10 U	10 U	10 U	5 U
butyl benzyl phthalate		10 U	10 U	10 U	10 U	10 U	10 U	5 U
3,3'-dichlorobenzidine		20 U	20 U	20 U	20 U	20 U	20 U	10 U
benzo(a)anthracene		10 U	10 U	10 U	10 U	10 U	10 U	5 U
chrysene		10 U	10 U	10 U	10 U	10 U	10 U	5 U
bis(2-ethylhexyl)phthalate		10 U	10 U	10 U	10 U	10 U	10 U	5 U
di-n-octyl phthalate		10 U	10 U	10 U	10 U	10 U	10 U	5 U
benzo(b)fluoranthene		10 U	10 U	10 U	10 U	10 U	10 U	5 U
benzo(k)fluoranthene		10 U	10 U	10 U	10 U	10 U	10 U	5 U
benzo(a)pyrene		10 U	10 U	10 U	10 U	10 U	10 U	5 U
indeno(1,2,3-cd)pyrene		10 U	10 U	10 U	10 U	10 U	10 U	5 U
dibenzo(a,h)anthracene		10 U	10 U	10 U	10 U	10 U	10 U	5 U
benzo(g,h,i,)perylene		10 U	10 U	10 U	10 U	10 U	10 U	5 U

PESTICIDE/PCB DATA	SAMPLE ID	NS4-BH1-SO1-5	NS4-BH1-S02-10	NS4-MW3-SO1-5	NS4-SS1-SO1	MB1	MB2	MB4
CLIENT - IT CORPORATION	MATRIX	SOLID	SOLID	SOLID	SOLID	SOLID	SOLID	SOLID
SITE NAME - SAN DIEGO NAVSTA	DILUTION	4.00	4.00	2.00	10.00	1.00	1.00	1.00
PREPARATION DATE - 16 JULY 91	BLANK ID	MB4	MB4	MB1	MB2	02/15/91	02/28/91	02/14/91
FILE ID - PS4-791S	UNITS	ug/kg	ug/kg	ug/kg	ug/kg	ug/kg	ug/kg	ug/kg
	% SOLIDS	87	84	92	75	100	100	100
FILE PRINT DATE ------>	31-Jan-92							
4,4'-DDT		73.6 UJ	76.2 UJ	71.0 J	213.3 UJ	16.0 U	16.0 U	16.0 U
alpha-chlordane		367.8 UJ	381.0 UJ	173.9 UJ	180.0 J	80.0 U	80.0 U	80.0 U
gamma-chlordane		367.8 UJ	381.0 UJ	173.9 UJ	170.0 J	80.0 U	80.0 U	80.0 U

PESTICIDE/PCB DATA	SAMPLE ID	NS4-BH1-SO1-5		NS4-BH1-S02-10		NS4-MW3-SO1-5		NS4-SS1-SO1		MB1		MB2		MB4	
CLIENT - IT CORPORATION	MATRIX	SOLID		SOLID		SOLID		SOLID		SOLID		SOLID		SOLID	
SITE NAME - SAN DIEGO NAVSTA	DILUTION	4.00		4.00		2.00		10.00		1.00		1.00		1.00	
PREPARATION DATE - 16 JULY 91	BLANK ID	MB4		MB4		MB1		MB2		02/15/91		02/28/91		02/14/91	
FILE ID - PS4-791	UNITS	ug/kg		ug/kg		ug/kg		ug/kg		ug/kg		ug/kg		ug/kg	
	% SOLIDS	87		84		92		75		100		100		100	
FILE PRINT DATE ——>	31-Jan-92														
alpha-BHC		36.8	UJ	38.1	UJ	17.4	UJ	106.7	UJ	8.0	U	8.0	U	8.0	U
beta-BHC		36.8	UJ	38.1	UJ	17.4	UJ	106.7	UJ	8.0	U	8.0	U	8.0	U
delta-BHC		36.8	UJ	38.1	UJ	17.4	UJ	106.7	UJ	8.0	U	8.0	U	8.0	U
gamma-BHC (lindane)		36.8	UJ	38.1	UJ	17.4	UJ	106.7	UJ	8.0	U	8.0	U	8.0	U
heptachlor		36.8	UJ	38.1	UJ	17.4	UJ	106.7	UJ	8.0	U	8.0	U	8.0	U
aldrin		36.8	UJ	38.1	UJ	17.4	UJ	106.7	UJ	8.0	U	8.0	U	8.0	U
heptachlor epoxide		36.8	UJ	38.1	UJ	17.4	UJ	106.7	UJ	8.0	U	8.0	U	8.0	U
endosulfan I		36.8	UJ	38.1	UJ	17.4	UJ	106.7	UJ	8.0	U	8.0	U	8.0	U
dieldrin		73.6	UJ	76.2	UJ	34.8	UJ	213.3	UJ	16.0	U	16.0	U	16.0	U
4,4'-DDE		73.6	UJ	76.2	UJ	34.8	UJ	213.3	UJ	16.0	U	16.0	U	16.0	U
endrin		73.6	UJ	76.2	UJ	34.8	UJ	213.3	UJ	16.0	U	16.0	U	16.0	U
endosulfan II		73.6	UJ	76.2	UJ	34.8	UJ	213.3	UJ	16.0	U	16.0	U	16.0	U
4,4'-DDD		73.6	UJ	76.2	UJ	34.8	UJ	213.3	UJ	16.0	U	16.0	U	16.0	U
endosulfan sulfate		73.6	UJ	76.2	UJ	34.8	UJ	213.3	UJ	16.0	U	16.0	U	16.0	U
4,4'-DDT		73.6	UJ	76.2	UJ	71.0	J	213.3	UJ	16.0	U	16.0	U	16.0	U
methoxychlor		367.8	UJ	381.0	UJ	173.9	UJ	1066.7	UJ	80.0	U	80.0	U	80.0	U
endrin ketone		73.6	UJ	76.2	UJ	34.8	UJ	213.3	UJ	16.0	U	16.0	U	16.0	U
alpha-chlordane		367.8	UJ	381.0	UJ	173.9	UJ	180.0	J	80.0	U	80.0	U	80.0	U
gamma-chlordane		367.8	UJ	381.0	UJ	173.9	UJ	170.0	J	80.0	U	80.0	U	80.0	U
toxaphene		735.6	UJ	761.9	UJ	347.8	UJ	2133.3	UJ	160.0	U	160.0	U	160.0	U
AROCLOR-1016		367.8	UJ	381.0	UJ	173.9	UJ	1066.7	UJ	80.0	U	80.0	U	80.0	U
AROCLOR-1221		367.8	UJ	381.0	UJ	173.9	UJ	1066.7	UJ	80.0	U	80.0	U	80.0	U
AROCLOR-1232		367.8	UJ	381.0	UJ	173.9	UJ	1066.7	UJ	80.0	U	80.0	U	80.0	U
AROCLOR-1242		367.8	UJ	381.0	UJ	173.9	UJ	1066.7	UJ	80.0	U	80.0	U	80.0	U
AROCLOR-1248		367.8	UJ	381.0	UJ	173.9	UJ	1066.7	UJ	80.0	U	80.0	U	80.0	U
AROCLOR-1254		735.6	UJ	761.9	UJ	347.8	UJ	2133.3	UJ	160.0	U	160.0	U	160.0	U
AROCLOR-1260		735.6	UJ	761.9	UJ	347.8	UJ	2133.3	UJ	160.0	U	160.0	U	160.0	U

PESTICIDE/PCB DATA	SAMPLE ID	NS4-MW02-GW1	NS4-WAER	NS4-ER-1-28-91	NS4-ER-2-11-91	MB1	MB2	MB3
CLIENT NAME - IT CORPORATION	MATRIX	WATER	WATER	WATER	WATER	WATER	WATER	WATER
SITE NAME - SAN DIEGO NAVSTA	DILUTION	1.00	1.00	1.00	1.00	1.00	1.00	1.00
PREPARATION DATE - 16 JULY 91	BLANK ID	MB2	MB1	MB3	MB2	02/05/91	03/12/91	02/08/91
FILE ID - P4-791	UNITS	ug/l	ug/l	ug/l	ug/l	ug/l	ug/l	ug/l
FILE PRINT DATE ------>	31-Jan-92							
alpha-BHC		0.050 U	0.050 U	0.050 U	0.050 U	0.050 U	0.050 U	0.050 U
beta-BHC		0.050 U	0.050 U	0.050 U	0.050 U	0.050 U	0.050 U	0.050 U
delta-BHC		0.050 U	0.050 U	0.050 U	0.050 U	0.050 U	0.050 U	0.050 U
gamma-BHC (lindane)		0.050 U	0.050 U	0.050 U	0.050 U	0.050 U	0.050 U	0.050 U
heptachlor		0.050 U	0.050 U	0.050 U	0.050 U	0.050 U	0.050 U	0.050 U
aldrin		0.050 U	0.050 U	0.050 U	0.050 U	0.050 U	0.050 U	0.050 U
heptachlor epoxide		0.050 U	0.050 U	0.050 U	0.050 U	0.050 U	0.050 U	0.050 U
endosulfan I		0.050 U	0.050 U	0.050 U	0.050 U	0.050 U	0.050 U	0.050 U
dieldrin		0.100 U	0.100 U	0.100 U	0.100 U	0.100 U	0.100 U	0.100 U
4,4'-DDE		0.100 U	0.100 U	0.100 U	0.100 U	0.100 U	0.100 U	0.100 U
endrin		0.100 U	0.100 U	0.100 U	0.100 U	0.100 U	0.100 U	0.100 U
endosulfan II		0.100 U	0.100 U	0.100 U	0.100 U	0.100 U	0.100 U	0.100 U
4,4'-DDD		0.100 U	0.100 U	0.100 U	0.100 U	0.100 U	0.100 U	0.100 U
endosulfan sulfate		0.100 U	0.100 U	0.100 U	0.100 U	0.100 U	0.100 U	0.100 U
4,4'-DDT		0.100 U	0.100 U	0.100 U	0.100 U	0.100 U	0.100 U	0.100 U
methoxychlor		0.500 U	0.500 U	0.500 U	0.500 U	0.500 U	0.500 U	0.500 U
endrin ketone		0.100 U	0.100 U	0.100 U	0.100 U	0.100 U	0.100 U	0.100 U
alpha-chlordane		0.500 U	0.500 U	0.500 U	0.500 U	0.500 U	0.500 U	0.500 U
gamma-chlordane		0.500 U	0.500 U	0.500 U	0.500 U	0.500 U	0.500 U	0.500 U
toxaphene		1.000 U	1.000 U	1.000 U	1.000 U	1.000 U	1.000 U	1.000 U
AROCLOR-1016		0.500 U	0.500 U	0.500 U	0.500 U	0.500 U	0.500 U	0.500 U
AROCLOR-1221		0.500 U	0.500 U	0.500 U	0.500 U	0.500 U	0.500 U	0.500 U
AROCLOR-1232		0.500 U	0.500 U	0.500 U	0.500 U	0.500 U	0.500 U	0.500 U
AROCLOR-1242		0.500 U	0.500 U	0.500 U	0.500 U	0.500 U	0.500 U	0.500 U
AROCLOR-1248		0.500 U	0.500 U	0.500 U	0.500 U	0.500 U	0.500 U	0.500 U
AROCLOR-1254		1.000 U	1.000 U	1.000 U	1.000 U	1.000 U	1.000 U	1.000 U
AROCLOR-1260		1.000 U	1.000 U	1.000 U	1.000 U	1.000 U	1.000 U	1.000 U

INORGANICS DATA	SAMPLE ID	NS4-BH1-SO1-5		NS4-BH1-SO2-10		NS4-MW3-SO1-5		NS4-SS1-SO1	
CLIENT - IT CORPORATION	MATRIX	SOLID		SOLID		SOLID		SOLID	
SITE NAME - SAN DIEGO NAVSTA	DILUTION	1.00		1.00		1.00		1.00	
PREPARATION DATE - 15 JULY 91	BLANK ID	NS4-WAER		NS4-WAER		NS4-ER-1-28-91			
FILE ID - IS4-791	UNITS	mg/kg		mg/kg		mg/kg		mg/kg	
	% SOLIDS	87.20		84.30		91.50		75.00	
FILE PRINT DATE ------>	31-Jan-92								
antimony		33.70	J	4.00	UJ	3.90	UJ	6.00	BJ
arsenic		3.40		1.30	B	0.86	BJ	5.40	J
barium		82.00		38.00	B	52.30		171.00	
beryllium		1.30		1.00	B	2.00		4.90	
cadmium		2.70		0.87	U	0.82	U	1.90	
chromium		51.70		6.00		9.90		67.30	
cobalt		4.40	B	3.20	B	5.40	B	16.20	
copper		450.00		58.70		37.00		421.00	
lead		3280.00		11.30		131.00		223.00	J
mercury		0.69		0.18	U	0.16		0.37	
molybdenum		1.60	U	1.50	U	1.40	U	1.90	B
nickel		4.80	B	4.40	B	5.60	B	30.70	
selenium		0.44	U	0.45	U	0.41	U	0.25	U
silver		1.60	U	1.30	U	1.40	U	2.20	B
thallium		0.22	B	0.22	U	0.41	U	0.25	B
vanadium		23.60		21.30		40.10		92.80	
zinc		496.00	U	26.00	U	58.90	U	649.00	
cyanide		1.00	UJ	1.00	UJ	1.00	U	*	

NOTE:

** Not requested for analysis.*

INORGANICS DATA	SAMPLE ID	NS4-MW2-GW1		NS4-WAER		NS4-ER-1-28-91		NS4-ER-2-11-91	
CLIENT - IT CORPORATION	MATRIX	WATER		WATER		WATER		WATER	
SITE NAME - SAN DIEGO NAVSTA	DILUTION	1.00		1.00		1.00		1.00	
PREPARATION DATE - 15 JULY 91	BLANK ID	NS4-ER-2-11-91							
FILE ID - I4-791	UNITS	ug/l		ug/l		ug/l		ug/l	
FILE PRINT DATE ------>	31-Jan-92								
antimony		45.60	B	19.00	U	19.00	U	19.00	U
arsenic		2.00	U	1.00	U	1.00	U	2.00	U
barium		71.10	B	10.60	B	8.60	B	12.90	B
beryllium		1.00	B	1.00	U	1.00	U	1.00	U
cadmium		4.00	U	4.00	U	4.00	U	4.00	U
chromium		4.00	U	4.00	U	4.00	U	4.00	U
cobalt		5.00	U	5.00	U	5.00	U	5.00	U
copper		6.00	U	24.70	B	25.10		10.20	B
lead		1.00	U	2.50	B	2.10	B	4.10	
mercury		0.20	U	0.20	U	0.20	U	0.20	U
molybdenum		24.50	B	7.00	U	7.00	U	7.00	U
nickel		9.00	U	9.00	U	9.00	U	9.00	U
selenium		1.00	UJ	2.00	U	2.00	U	1.00	UJ
silver		8.50	UJ	5.80	B	5.30	B	3.00	UJ
thallium		10.00	U	1.00	U	1.00	U	1.20	BJ
vanadium		49.90	U	4.20	B	4.20	B	18.00	B
zinc		52.70	U	220.00		717.00		159.00	
cyanide		*		0.02	UJ	0.02	UJ	*	

NOTE:

* Not requested for analysis.

VOLATILE ORGANICS DATA	SAMPLE ID	NS7-BH2-S01-5	NS7-BH1-SO2-9	NS7-MW03-SO2-10	NS7-TB-03	NS7-TB2	VBLK1	VBLK2	VBLK4	VBLK5	VBLK6
CLIENT NAME - IT CORPORATION	MATRIX	SOLID	SOLID	SOLID	WATER	SOLID	SOLID	SOLID	SOLID	SOLID	SOLID
SITE - SAN DIEGO NAVSTA	DILUTION	1.70	1.00	5.00	1.00	1.00	1.00	1.00	1.00	1.00	1.00
PREPARATION DATE 19 JULY 91	BLANK ID	VBLK6	VBLK4	VBLK5	VBLK1	VBLK4	02/01/91	02/01/91	01/31/91	02/02/91	02/04/91
FILE ID - VS7-791S	UNITS	ug/kg	ug/kg	ug/kg	ug/l	ug/kg	ug/kg	ug/kg	ug/kg	ug/kg	ug/kg
	% SOLIDS	82	86	81	100	100	100	100	100	100	100
FILE PRINT DATE---------->	31-Jan-92										
acetone		340 J	210 B	110 U	3 B	14 B	4 J	10 U	4 J	10 U	10 U
carbon disulfide		5 J	22	31 U	5 U	5 U	5 U	5 U	5 U	5 U	5 U
2-butanone (MEK)		83	62	35 J	10 U	10 U	10 U	10 U	10 U	10 U	10 U
trichloroethene (TCE)		10 U	4 J	31 U	5 U	5 U	5 U	5 U	5 U	5 U	5 U
4-methyl-2-pentanone		21 U	5 J	62 U	10 U	10 U	10 U	10 U	10 U	10 U	10 U
toluene		5 J	12	44	5 U	5 U	5 U	5 U	5 U	5 U	5 U
ethyl benzene		10 U	6 U	48	5 U	5 U	5 U	5 U	5 U	5 U	5 U
total xylenes		59	72	290	5 U	5 U	5 U	5 U	5 U	5 U	5 U

VOLATILE ORGANICS DATA	SAMPLE ID	NS7-BH2-S01-5	NS7-BH1-SO2-9	NS7-WAER	NS7-MW03-SO2-10	NS7-TB-03	NS7-TB2	VBLK1	VBLK2	VBLK4
CLIENT NAME - IT CORPORATION	MATRIX	SOLID	SOLID	SOLID	SOLID	WATER	SOLID	SOLID	SOLID	SOLID
SITE - SAN DIEGO NAVSTA	DILUTION	1.70	1.00	1.00	5.00	1.00	1.00	1.00	1.00	1.00
PREPARATION DATE 19 JULY 91	BLANK ID	VBLK6	VBLK4	VBLK2	VBLK5	VBLK1	VBLK4	02/01/91	02/01/91	01/31/91
FILE ID - VS7-791	UNITS	ug/kg	ug/kg	ug/kg	ug/kg	ug/l	ug/kg	ug/kg	ug/kg	ug/kg
	% SOLIDS	82	86	100	81	100	100	100	100	100
FILE PRINT DATE---------->	31-Jan-92									
chloromethane		21 U	12 U	10 U	62 U	10 U	10 U	10 U	10 U	10
bromomethane		21 U	12 U	10 U	62 U	10 U	10 U	10 U	10 U	10
vinyl chloride		21 U	12 U	10 U	62 U	10 U	10 U	10 U	10 U	10
chloroethane		21 U	12 U	10 U	62 U	10 U	10 U	10 U	10 U	10
methylene chloride		22 U	8 U	4 BJ	40 U	5 B	3 BJ	7	6	11
acetone		340 J	210 B	6 J	110 U	3 BJ	14 B	4 J	10 U	4
carbon disulfide		5 J	22	5 U	31 U	5 U	5 U	5 U	5 U	5
1,1-dichloroethene		10 U	6 U	5 U	31 U	5 U	5 U	5 U	5 U	5
1,1-dichloroethane		10 U	6 U	5 U	31 U	5 U	5 U	5 U	5 U	5
1,2-dichloroethene (total)		10 U	6 U	5 U	31 U	5 U	5 U	5 U	5 U	5
chloroform		10 U	6 U	2 J	31 U	5 U	12	5 U	5 U	5
1,2-dichloroethane		10 U	6 U	5 U	31 U	5 U	5 U	5 U	5 U	5
2-butanone (MEK)		83	62	10 U	35 J	10 U	10 U	10 U	10 U	10
1,1,1-trichloroethane		10 U	6 U	5 U	31 U	5 U	5 U	5 U	5 U	5
carbon tetrachloride		10 U	6 U	5 U	31 U	5 U	5 U	5 U	5 U	5
vinyl acetate		21 U	12 U	10 U	62 U	10 U	10 U	10 U	10 U	10
bromodichloromethane		10 U	6 U	3 J	31 U	5 U	4 J	5 U	5 U	5
1,2-dichloropropane		10 U	6 U	5 U	31 U	5 U	5 U	5 U	5 U	5
cis-1,3-dichloropropene		10 U	6 U	5 U	31 U	5 U	5 U	5 U	5 U	5
trichloroethene (TCE)		10 U	4 J	5 U	31 U	5 U	5 U	5 U	5 U	5
dibromochloromethane		10 U	6 U	3 J	31 U	5 U	3 J	5 U	5 U	5
1,1,2-trichloroethane		10 U	6 U	5 U	31 U	5 U	5 U	5 U	5 U	5
benzene		10 U	6 U	5 U	31 U	5 U	5 U	5 U	5 U	5
trans-1,3-dichloropropene		10 U	6 U	5 U	31 U	5 U	5 U	5 U	5 U	5
bromoform		10 U	6 U	5 U	31 U	5 U	5 U	5 U	5 U	5
4-methyl-2-pentanone		21 U	5 J	10 U	62 U	10 U	10 U	10 U	10 U	10
2-hexanone (MBK)		21 U	12 U	10 U	62 U	10 U	10 U	10 U	10 U	10
tetrachloroethene (PCE)		10 U	6 U	5 U	31 U	5 U	5 U	5 U	5 U	5
1,1,2,2-tetrachloroethane		10 U	6 U	5 U	31 U	5 U	5 U	5 U	5 U	5
toluene		5 J	12	5 U	44	5 U	5 U	5 U	5 U	5
chlorobenzene		10 U	6 U	5 U	31 U	5 U	5 U	5 U	5 U	5
ethyl benzene		10 U	6 U	5 U	48	5 U	5 U	5 U	5 U	5
styrene		10 U	6 U	5 U	31 U	5 U	5 U	5 U	5 U	5
total xylenes		59	72	5 U	290	5 U	5 U	5 U	5 U	5

VOLATILE ORGANICS DATA	SAMPLE ID	VBLK5		VBLK6	
CLIENT NAME - IT CORPORATION	MATRIX	SOLID		SOLID	
SITE - SAN DIEGO NAVSTA	DILUTION	1.00		1.00	
PREPARATION DATE 19 JULY 91	BLANK ID	02/02/91		02/04/91	
FILE ID - VS7-791	UNITS	ug/kg		ug/kg	
	% SOLIDS	100		100	
FILE PRINT DATE---------->	31-Jan-92				
chloromethane		U	10 U		10 U
bromomethane		U	10 U		10 U
vinyl chloride		U	10 U		10 U
chloroethane		U	10 U		10 U
methylene chloride			5		5
acetone		J	10 U		10 U
carbon disulfide		U	5 U		5 U
1,1-dichloroethene		U	5 U		5 U
1,1-dichloroethane		U	5 U		5 U
1,2-dichloroethene (total)		U	5 U		5 U
chloroform		U	5 U		5 U
1,2-dichloroethane		U	5 U		5 U
2-butanone (MEK)		U	10 U		10 U
1,1,1-trichloroethane		U	5 U		5 U
carbon tetrachloride		U	5 U		5 U
vinyl acetate		U	10 U		10 U
bromodichloromethane		U	5 U		5 U
1,2-dichloropropane		U	5 U		5 U
cis-1,3-dichloropropene		U	5 U		5 U
trichloroethene (TCE)		U	5 U		5 U
dibromochloromethane		U	5 U		5 U
1,1,2-trichloroethane		U	5 U		5 U
benzene		U	5 U		5 U
trans-1,3-dichloropropene		U	5 U		5 U
bromoform		U	5 U		5 U
4-methyl-2-pentanone		U	10 U		10 U
2-hexanone (MBK)		U	10 U		10 U
tetrachloroethene (PCE)		U	5 U		5 U
1,1,2,2-tetrachloroethane		U	5 U		5 U
toluene		U	5 U		5 U
chlorobenzene		U	5 U		5 U
ethyl benzene		U	5 U		5 U
styrene		U	5 U		5 U
total xylenes		U	5 U		5 U

VOLATILE ORGANICS DATA	SAMPLE ID	NS7-MW03-GW1	VBLK6	
CLIENT - IT CORPORATION	MATRIX	WATER	WATER	
SITE - SAN DIEGO NAVSTA	DILUTION	1.00	1.00	
PREPARATION DATE 21 JULY 91	BLANK ID	VBLK6	02/26/91	
FILE ID - V7-791S	UNITS	ug/L	ug/L	
FILE PRINT DATE------->	31-Jan-92			
carbon tetrachloride		9	5	U

VOLATILE ORGANICS DATA	SAMPLE ID	NS7-MW03-GW1		VBLK6	
CLIENT - IT CORPORATION	MATRIX	WATER		WATER	
SITE - SAN DIEGO NAVSTA	DILUTION	1.00		1.00	
PREPARATION DATE 21 JULY 91	BLANK ID	VBLK6		02/26/91	
FILE ID - V7-791	UNITS	ug/L		ug/L	
FILE PRINT DATE------->	31-Jan-92				
chloromethane		10	U	10	U
bromomethane		10	U	10	U
vinyl chloride		10	U	10	U
chloroethane		10	U	10	U
methylene chloride		5	U	6	
acetone		10	U	10	U
carbon disulfide		5	U	5	U
1,1-dichloroethene		5	U	5	U
1,1-dichloroethane		5	U	5	U
1,2-dichloroethene (total)		5	U	5	U
chloroform		7	U	2	J
1,2-dichloroethane		5	U	5	U
2-butanone		10	U	10	U
1,1,1-trichloroethane		5	U	5	U
carbon tetrachloride		9		5	U
vinyl acetate		10	U	10	U
bromodichloromethane		5	U	5	U
1,2-dichloropropane		5	U	5	U
cis-1,3-dichloropropene		5	U	5	U
trichloroethene		5	U	5	U
dibromochloromethane		5	U	5	U
1,1,2-trichloroethane		5	U	5	U
benzene		5	U	5	U
trans-1,3-dichloropropene		5	U	5	U
bromoform		5	U	5	U
4-methyl-2-pentanone		10	U	10	U
2-hexanone		10	U	10	U
tetrachloroethene		5	U	5	U
1,1,2,2-tetrachloroethane		5	U	5	U
toluene		5	U	5	U
chlorobenzene		5	U	5	U
ethyl benzene		5	U	5	U
styrene		5	U	5	U
total xylenes		5	U	5	U

SEMIVOLATILE ORGANICS DATA	SAMPLE ID	NS7-BH1-SO2-9		NS7-BH2-SO1-5		NS7-MW03-SO2-10		SBLK2		SBLK4	
CLIENT - IT CORPORATION	MATRIX	SOLID		SOLID		SOLID		SOLID		SOLID	
SITE NAME - SAN DIEGO NAVSTA	DILUTION	10.00		2.00		1.00		1.00		10.00	
PREPARATION DATE - 18 JULY 91	BLANK ID	SBLK4		SBLK2		SBLK2		02/07/91		02/23/91	
FILE ID - SVS7791S	UNITS	ug/kg		ug/kg		ug/kg		ug/kg		ug/kg	
	% SOLIDS	86		82		81		100		100	
FILE PRINT DATE ———>	31-Jan-92										
1,4-dichlorobenzene		3837	UR	280	J	300	J	330	U	3300	U
1,2-dichlorobenzene		3837	UR	180	J	407	U	330	U	3300	U
4-methylphenol		3837	UR	610	J	407	U	330	U	3300	U
1,2,4-trichlorobenzene		3837	UR	805	U	160	J	330	U	3300	U
4-chloroaniline		3837	UR	2200		1900		330	U	3300	U
2-methylnaphthalene		830	J	470	J	730		330	U	3300	U
acenaphthene		3837	UR	805	U	69	J	330	U	3300	U
fluorene		3837	UR	110	J	110	J	330	U	3300	U
phenanthrene		760	J	500	J	440		330	U	3300	U
anthracene		3837	UR	100	J	407	U	330	U	3300	U
fluoranthene		760	J	410	J	360	J	330	U	3300	U
pyrene		860	J	500	J	390	J	330	U	3300	U
benzo(a)anthracene		3837	UR	180	J	170	J	330	U	3300	U
chrysene		500	J	220	J	200	J	330	U	3300	U
bis(2-ethylhexyl)phthalate		11000	R	7400		4400		330	U	3300	U
di-n-octyl phthalate		3837	UR	260	J	160	J	330	U	3300	U
benzo(b)fluoranthene		3837	UR	805	U	140	J	330	U	3300	U

SEMIVOLATILE ORGANICS DATA	SAMPLE ID	NS7-BH1-SO2-9		NS7-BH2-SO1-5		NS7-MW03-SO2-10		SBLK2		SBLK4	
CLIENT - IT CORPORATION	MATRIX	SOLID		SOLID		SOLID		SOLID		SOLID	
SITE NAME - SAN DIEGO NAVSTA	DILUTION	10.00		2.00		1.00		1.00		10.00	
PREPARATION DATE - 18 JULY 91	BLANK ID	SBLK4		SBLK2		SBLK2		02/07/91		02/23/91	
FILE ID - SVS7-791	UNITS	ug/kg		ug/kg		ug/kg		ug/kg		ug/kg	
	% SOLIDS	86		82		81		100		100	
FILE PRINT DATE ------->	31-Jan-92										
phenol		3837	UR	805	U	407	U	330	U	3300	U
bis(2-chloroethyl)ether		3837	UR	805	U	407	U	330	U	3300	U
2-chlorophenol		3837	UR	805	U	407	U	330	U	3300	U
1,3-dichlorobenzene		3837	UR	805	U	407	U	330	U	3300	U
1,4-dichlorobenzene		3837	UR	280	J	300	J	330	U	3300	U
benzyl alcohol		3837	UR	805	U	407	U	330	U	3300	U
1,2-dichlorobenzene		3837	UR	180	J	407	U	330	U	3300	U
2-methylphenol		3837	UR	805	U	407	U	330	U	3300	U
bis(2-chloroisopropyl)ether		3837	UR	805	U	407	U	330	U	3300	U
4-methylphenol		3837	UR	610	J	407	U	330	U	3300	U
N-nitrosodipropylamine		3837	UR	805	U	407	U	330	U	3300	U
hexachloroethane		3837	UR	805	U	407	U	330	U	3300	U
nitrobenzene		3837	UR	805	U	407	U	330	U	3300	U
isophorone		3837	UR	805	U	407	U	330	U	3300	U
2-nitrophenol		3837	UR	805	U	407	U	330	U	3300	U
2,4-dimethylphenol		3837	UR	805	U	407	U	330	U	3300	U
benzoic acid		18605	UR	3902	U	1975	U	1600	U	16000	U
bis(2-chloroethoxy)methane		3837	UR	805	U	407	U	330	U	3300	U
2,4-dichlorophenol		3837	UR	805	U	407	U	330	U	3300	U
1,2,4-trichlorobenzene		3837	UR	805	U	160	J	330	U	3300	U
naphthalene		3837	UR	805	U	407	U	330	U	3300	U
4-chloroaniline		3837	UR	2200		1900		330	U	3300	U
hexacholorobutadiene		3837	UR	805	U	407	U	330	U	3300	U
4-chloro-3-methylphenol		3837	UR	805	U	407	U	330	U	3300	U
2-methylnaphthalene		830	J	470	J	730		330	U	3300	U
hexachlorocyclopentadiene		3837	UR	805	U	407	U	330	U	3300	U
2,4,6-trichlorophenol		3837	UR	805	U	407	U	330	U	3300	U
2,4,5-trichlorophenol		18605	UR	3902	U	1975	U	1600	U	16000	U
2-chloronaphthalene		3837	UR	805	U	407	U	330	U	3300	U
2-nitroaniline		18605	UR	3902	U	1975	U	1600	U	16000	U
dimethyl phthalate		3837	UR	805	U	407	U	330	U	3300	U
acenaphthylene		3837	UR	805	U	407	U	330	U	3300	U
2,6-dinitrotoluene		3837	UR	805	U	407	U	330	U	3300	U
3-nitroaniline		18605	UR	3902	U	1975	U	1600	U	16000	U

SEMIVOLATILE ORGANICS DATA	SAMPLE ID	NS7-BH1-SO2-9		NS7-BH2-SO1-5		NS7-MW03-SO2-10		SBLK2		SBLK4	
CLIENT - IT CORPORATION	MATRIX	SOLID		SOLID		SOLID		SOLID		SOLID	
SITE NAME - SAN DIEGO NAVSTA	DILUTION	10.00		2.00		1.00		1.00		10.00	
PREPARATION DATE - 18 JULY 91	BLANK ID	SBLK4		SBLK2		SBLK2		02/07/91		02/23/91	
FILE ID - SVS7-791	UNITS	ug/kg		ug/kg		ug/kg		ug/kg		ug/kg	
	% SOLIDS	86		82		81		100		100	
FILE PRINT DATE ------>	31-Jan-92										
acenaphthene		3837	UR	805	U	69	J	330	U	3300	U
2,4-dinitrophenol		18605	UR	3902	U	1975	U	1600	U	16000	U
4-nitrophenol		18605	UR	3902	U	1975	U	1600	U	16000	U
dibenzofuran		3837	UR	805	U	407	U	330	U	3300	U
2,4-dinitrotoluene		3837	UR	805	U	407	U	330	U	3300	U
diethylphthalate		3837	UR	805	U	407	U	330	U	3300	U
4-chlorophenyl phenyl ether		3837	UR	805	U	407	U	330	U	3300	U
fluorene		3837	UR	110	J	110	J	330	U	3300	U
4-nitroaniline		18605	UR	3902	U	1975	U	1600	U	16000	U
4,6-dinitro-2-methylphenol		18605	UR	3902	U	1975	U	1600	U	16000	U
N-nitrosodiphenylamine		3837	UR	805	U	407	U	330	U	3300	U
4-bromophenyl phenyl ether		3837	UR	805	U	407	U	330	U	3300	U
hexachlorobenzene		3837	UR	805	U	407	U	330	U	3300	U
pentachlorophenol		18605	UR	3902	U	1975	U	1600	U	16000	U
phenanthrene		760	J	500	J	440		330	U	3300	U
anthracene		3837	UR	100	J	407	U	330	U	3300	U
di-n-butyl phthalate		3837	UR	805	U	407	U	330	U	3300	U
fluoranthene		760	J	410	J	360	J	330	U	3300	U
pyrene		860	J	500	J	390	J	330	U	3300	U
butyl benzyl phthalate		3837	UR	805	U	407	U	330	U	3300	U
3,3'-dichlorobenzidine		7674	UR	1610	U	815	U	660	U	6600	U
benzo(a)anthracene		3837	UR	180	J	170	J	330	U	3300	U
chrysene		500	J	220	J	200	J	330	U	3300	U
bis(2-ethylhexyl)phthalate		11000	R	7400		4400		330	U	3300	U
di-n-octyl phthalate		3837	UR	260	J	160	J	330	U	3300	U
benzo(b)fluoranthene		3837	UR	805	U	140	J	330	U	3300	U
benzo(k)fluoranthene		3837	UR	805	U	407	U	330	U	3300	U
benzo(a)pyrene		3837	UR	805	U	407	U	330	U	3300	U
indeno(1,2,3-cd)pyrene		3837	UR	805	U	407	U	330	U	3300	U
dibenzo(a,h)anthracene		3837	UR	805	U	407	U	330	U	3300	U
benzo(g,h,i,)perylene		3837	UR	805	U	407	U	330	U	3300	U

SEMIVOLATILE ORGANICS DATA	SAMPLE ID	NS7-MW03-GW1	NS7-WAER	SBLK1	SBLK2
CLIENT - IT CORPORATION	MATRIX	WATER	WATER	WATER	WATER
SITE NAME - SAN DIEGO NAVSTA	DILUTION	1.00	0.50	0.50	1.00
PREPARATION DATE - 18 JULY 91	BLANK ID	SBLK2	SBLK1	01/31/91	03/26/91
FILE ID - SV7-791	UNITS	ug/l	ug/l	ug/l	ug/l
FILE PRINT DATE ---->	31-Jan-92				
phenol		10 U	11	5 U	10 U
bis(2-chloroethyl)ether		10 U	5 U	5 U	10 U
2-chlorophenol		10 U	5 U	5 U	10 U
1,3-dichlorobenzene		10 U	5 U	5 U	10 U
1,4-dichlorobenzene		10 U	5 U	5 U	10 U
benzyl alcohol		10 U	5 U	5 U	10 U
1,2-dichlorobenzene		10 U	5 U	5 U	10 U
2-methylphenol		10 U	5 U	5 U	10 U
bis(2-chloroisopropyl)ether		10 U	5 U	5 U	10 U
4-methylphenol		10 U	5 U	5 U	10 U
N-nitrosodipropylamine		10 U	5 U	5 U	10 U
hexachloroethane		10 U	5 U	5 U	10 U
nitrobenzene		10 U	5 U	5 U	10 U
isophorone		10 U	5 U	5 U	10 U
2-nitrophenol		10 U	5 U	5 U	10 U
2,4-dimethylphenol		10 U	5 U	5 U	10 U
benzoic acid		50 U	25 U	25 U	50 U
bis(2-chloroethoxy)methane		10 U	5 U	5 U	10 U
2,4-dichlorophenol		10 U	5 U	5 U	10 U
1,2,4-trichlorobenzene		10 U	5 U	5 U	10 U
naphthalene		10 U	5 U	5 U	10 U
4-chloroaniline		10 U	5 U	5 U	10 U
hexacholorobutadiene		10 U	5 U	5 U	10 U
4-chloro-3-methylphenol		10 U	5 U	5 U	10 U
2-methylnaphthalene		10 U	5 U	5 U	10 U
hexachlorocyclopentadiene		10 U	5 U	5 U	10 U
2,4,6-trichlorophenol		10 U	5 U	5 U	10 U
2,4,5-trichlorophenol		50 U	25 U	25 U	50 U
2-chloronaphthalene		10 U	5 U	5 U	10 U
2-nitroaniline		50 U	25 U	25 U	50 U
dimethyl phthalate		10 U	5 U	5 U	10 U
acenaphthylene		10 U	5 U	5 U	10 U
2,6-dinitrotoluene		10 U	5 U	5 U	10 U
3-nitroaniline		50 U	25 U	25 U	50 U
acenaphthene		10 U	5 U	5 U	10 U

SEMIVOLATILE ORGANICS DATA	SAMPLE ID	NS7-MW03-GW1		NS7-WAER		SBLK1		SBLK2	
CLIENT - IT CORPORATION	MATRIX	WATER		WATER		WATER		WATER	
SITE NAME - SAN DIEGO NAVSTA	DILUTION	1.00		0.50		0.50		1.00	
PREPARATION DATE - 18 JULY 91	BLANK ID	SBLK2		SBLK1		01/31/91		03/26/91	
FILE ID - SV7-791	UNITS	ug/l		ug/l		ug/l		ug/l	
FILE PRINT DATE ---->	31-Jan-92								
2,4-dinitrophenol		50	U	25	U	25	U	50	U
4-nitrophenol		50	U	25	U	25	U	50	U
dibenzofuran		10	U	5	U	5	U	10	U
2,4-dinitrotoluene		10	U	5	U	5	U	10	U
diethylphthalate		10	U	5	U	5	U	10	U
4-chlorophenyl phenyl ether		10	U	5	U	5	U	10	U
fluorene		10	U	5	U	5	U	10	U
4-nitroaniline		50	U	25	U	25	U	50	U
4,6-dinitro-2-methylphenol		50	U	25	U	25	U	50	U
N-nitrosodiphenylamine		10	U	5	U	5	U	10	U
4-bromophenyl phenyl ether		10	U	5	U	5	U	10	U
hexachlorobenzene		10	U	5	U	5	U	10	U
pentachlorophenol		50	U	25	U	25	U	50	U
phenanthrene		10	U	5	U	5	U	10	U
anthracene		10	U	5	U	5	U	10	U
di-n-butyl phthalate		10	U	5	U	5	U	10	U
fluoranthene		10	U	5	U	5	U	10	U
pyrene		10	U	5	U	5	U	10	U
butyl benzyl phthalate		10	U	5	U	5	U	10	U
3,3'-dichlorobenzidine		20	U	10	U	10	U	20	U
benzo(a)anthracene		10	U	5	U	5	U	10	U
chrysene		10	U	5	U	5	U	10	U
bis(2-ethylhexyl)phthalate		10	U	6		5	U	10	U
di-n-octyl phthalate		10	U	5	U	5	U	10	U
benzo(b)fluoranthene		10	U	5	U	5	U	10	U
benzo(k)fluoranthene		10	U	5	U	5	U	10	U
benzo(a)pyrene		10	U	5	U	5	U	10	U
indeno(1,2,3-cd)pyrene		10	U	5	U	5	U	10	U
dibenzo(a,h)anthracene		10	U	5	U	5	U	10	U
benzo(g,h,i,)perylene		10	U	5	U	5	U	10	U

PESTICIDE/PCB DATA	SAMPLE ID	NS7-BH1-SO2-9	NS7-BH2-SO1-5	NS7-MW03-SO2-10	MB2	MB4	MB5
CLIENT - IT CORPORATION	MATRIX	SOLID	SOLID	SOLID	SOLID	SOLID	SOLID
SITE NAME - SAN DIEGO NAVSTA	DILUTION	4.00	4.00	2.00	1.00	1.00	1.00
PREPARATION DATE - 18 JULY 91	BLANK ID	MB2	MB5	MB4	03/04/91	02/14/91	02/27/91
FILE ID - PS7-791S	UNITS	ug/kg	ug/kg	ug/kg	ug/kg	ug/kg	ug/kg
	% SOLIDS	86	82	81	100	100	100
FILE PRINT DATE ------>	31-Jan-92						
4,4'-DDE		140.0 J	100.0 J	80.0 J	16.0 U	16.0 U	16.0 U
AROCLOR-1254		1200.0 J	1100.0 J	720.0 J	160.0 U	160.0 U	160.0 U

PESTICIDE/PCB DATA	SAMPLE ID	NS7-BH1-SO2-9		NS7-BH2-SO1-5		NS7-MW03-SO2-10		MB2		MB4		MB5	
CLIENT - IT CORPORATION	MATRIX	SOLID		SOLID		SOLID		SOLID		SOLID		SOLID	
SITE NAME - SAN DIEGO NAVSTA	DILUTION	4.00		4.00		2.00		1.00		1.00		1.00	
PREPARATION DATE - 18 JULY 91	BLANK ID	MB2		MB5		MB4		03/04/91		02/14/91		02/27/91	
FILE ID - PS7-791	UNITS	ug/kg		ug/kg		ug/kg		ug/kg		ug/kg		ug/kg	
	% SOLIDS	86		82		81		100		100		100	
FILE PRINT DATE ------>	31-Jan-92												
alpha-BHC		37.2	UJ	39.0	UJ	19.8	UJ	8.0	U	8.0	U	8.0	U
beta-BHC		37.2	UJ	39.0	UJ	19.8	UJ	8.0	U	8.0	U	8.0	U
delta-BHC		37.2	UJ	39.0	UJ	19.8	UJ	8.0	U	8.0	U	8.0	U
gamma-BHC (lindane)		37.2	UJ	39.0	UJ	19.8	UJ	8.0	U	8.0	U	8.0	U
heptachlor		37.2	UJ	39.0	UJ	19.8	UJ	8.0	U	8.0	U	8.0	U
aldrin		37.2	UJ	39.0	UJ	19.8	UJ	8.0	U	8.0	U	8.0	U
heptachlor epoxide		37.2	UJ	39.0	UJ	19.8	UJ	8.0	U	8.0	U	8.0	U
endosulfan I		37.2	UJ	39.0	UJ	19.8	UJ	8.0	U	8.0	U	8.0	U
dieldrin		74.4	UJ	78.0	UJ	39.5	UJ	16.0	U	16.0	U	16.0	U
4,4'-DDE		140.0	J	100.0	J	80.0	J	16.0	U	16.0	U	16.0	U
endrin		74.4	UJ	78.0	UJ	39.5	UJ	16.0	U	16.0	U	16.0	U
endosulfan II		74.4	UJ	78.0	UJ	39.5	UJ	16.0	U	16.0	U	16.0	U
4,4'-DDD		74.4	UJ	78.0	UJ	39.5	UJ	16.0	U	16.0	U	16.0	U
endosulfan sulfate		74.4	UJ	78.0	UJ	39.5	UJ	16.0	U	16.0	U	16.0	U
4,4'-DDT		74.4	UJ	78.0	UJ	39.5	UJ	16.0	U	16.0	U	16.0	U
methoxychlor		372.1	UJ	390.2	UJ	197.5	UJ	80.0	U	80.0	U	80.0	U
endrin ketone		74.4	UJ	78.0	UJ	39.5	UJ	16.0	U	16.0	U	16.0	U
alpha-chlordane		372.1	UJ	390.2	UJ	197.5	UJ	180.0	U	80.0	U	80.0	U
gamma-chlordane		372.1	UJ	390.2	UJ	197.5	UJ	170.0	U	80.0	U	80.0	U
toxaphene		744.2	UJ	780.5	UJ	395.1	UJ	160.0	U	160.0	U	160.0	U
AROCLOR-1016		372.1	UJ	390.2	UJ	197.5	UJ	80.0	U	80.0	U	80.0	U
AROCLOR-1221		372.1	UJ	390.2	UJ	197.5	UJ	80.0	U	80.0	U	80.0	U
AROCLOR-1232		372.1	UJ	390.2	UJ	197.5	UJ	80.0	U	80.0	U	80.0	U
AROCLOR-1242		372.1	UJ	390.2	UJ	197.5	UJ	80.0	U	80.0	U	80.0	U
AROCLOR-1248		372.1	UJ	390.2	UJ	197.5	UJ	80.0	U	80.0	U	80.0	U
AROCLOR-1254		1200.0	J	1100.0	J	720.0	J	160.0	U	160.0	U	160.0	U
AROCLOR-1260		744.2	UJ	780.5	UJ	395.1	UJ	160.0	U	160.0	U	160.0	U

PESTICIDE/PCB DATA	SAMPLE ID	NS7-MW03-GW1		NS7-WAER		MB1		MB1A	
CLIENT NAME - IT CORPORATION	MATRIX	WATER		WATER		WATER		WATER	
SITE NAME - SAN DIEGO NAVSTA	DILUTION	1.00		1.00		1.00		1.00	
PREPARATION DATE - 18 JULY 91	BLANK ID	MB1A		MB1		02/05/91		03/06/91	
FILE ID - P7-791	UNITS	ug/l		ug/l		ug/l		ug/l	
FILE PRINT DATE ------>	31-Jan-92								
alpha-BHC		0.050	U	0.050	U	0.050	U	0.050	U
beta-BHC		0.050	U	0.050	U	0.050	U	0.050	U
delta-BHC		0.050	U	0.050	U	0.050	U	0.050	U
gamma-BHC (lindane)		0.050	U	0.050	U	0.050	U	0.050	U
heptachlor		0.050	U	0.050	U	0.050	U	0.050	U
aldrin		0.050	U	0.050	U	0.050	U	0.050	U
heptachlor epoxide		0.050	U	0.050	U	0.050	U	0.050	U
endosulfan I		0.050	U	0.050	U	0.050	U	0.050	U
dieldrin		0.100	U	0.100	U	0.100	U	0.100	U
4,4'-DDE		0.100	U	0.100	U	0.100	U	0.100	U
endrin		0.100	U	0.100	U	0.100	U	0.100	U
endosulfan II		0.100	U	0.100	U	0.100	U	0.100	U
4,4'-DDD		0.100	U	0.100	U	0.100	U	0.100	U
endosulfan sulfate		0.100	U	0.100	U	0.100	U	0.100	U
4,4'-DDT		0.100	U	0.100	U	0.100	U	0.100	U
methoxychlor		0.500	U	0.500	U	0.500	U	0.500	U
endrin ketone		0.100	U	0.100	U	0.100	U	0.100	U
alpha-chlordane		0.500	U	0.500	U	0.500	U	0.500	U
gamma-chlordane		0.500	U	0.500	U	0.500	U	0.500	U
toxaphene		1.000	U	1.000	U	1.000	U	1.000	U
AROCLOR-1016		0.500	U	0.500	U	0.500	U	0.500	U
AROCLOR-1221		0.500	U	0.500	U	0.500	U	0.500	U
AROCLOR-1232		0.500	U	0.500	U	0.500	U	0.500	U
AROCLOR-1242		0.500	U	0.500	U	0.500	U	0.500	U
AROCLOR-1248		0.500	U	0.500	U	0.500	U	0.500	U
AROCLOR-1254		1.000	U	1.000	U	1.000	U	1.000	U
AROCLOR-1260		1.000	U	1.000	U	1.000	U	1.000	U

INORGANICS DATA	SAMPLE ID	NS7-BH1-SO2-9		NS7-BH2-SO1-5		NS7-MW03-SO2-10	
CLIENT - IT CORPORATION	MATRIX	SOLID		SOLID		SOLID	
SITE NAME - SAN DIEGO NAVSTA	DILUTION	1.00		1.00		1.00	
PREPARATION DATE - 17 JULY 91	BLANK ID			NS7-WAER		NS7-WAER	
FILE ID - IS7-791	UNITS	mg/kg		mg/kg		mg/kg	
	% SOLIDS	86.00		82.10		80.80	
FILE PRINT DATE ------>	31-Jan-92						
antimony		4.30	UJ	9.40	BJ	4.70	UJ
arsenic		4.00	J	4.60		2.80	
barium		142.00		197.00		239.00	
beryllium		0.23	U	0.22	U	0.25	U
cadmium		3.00		3.90		4.60	
chromium		39.90		58.70		85.40	
cobalt		7.40	B	9.00	B	6.90	B
copper		53.90		79.80		97.50	
lead		94.70		106.00		77.70	
mercury		1.00		1.30		1.50	
molybdenum		1.60	U	2.50	B	2.80	B
nickel		13.50		20.70		23.60	
selenium		0.43	UJ	0.45	U	0.49	U
silver		8.10		12.20		16.50	
thallium		0.43	UJ	0.45	U	0.49	U
vanadium		35.20		41.80		40.40	
zinc		162.00		222.00	U	277.00	U
cyanide		1.00	U	1.00	U	1.00	U

INORGANICS DATA	SAMPLE ID	NS7-MW03-GW1		NS7-WAER	
CLIENT - IT CORPORATION	MATRIX	WATER		WATER	
SITE NAME - SAN DIEGO NAVSTA	DILUTION	1.00		1.00	
PREPARATION DATE - 17 JULY 91	BLANK ID				
FILE ID - I7-791	UNITS	ug/l		ug/l	
FILE PRINT DATE ———>	31-Jan-92				
antimony		64.00		19.00	UJ
arsenic		2.70	B	1.90	B
barium		80.90	B	33.20	B
beryllium		1.60	B	1.00	U
cadmium		4.00	U	4.00	U
chromium		6.00	B	4.00	U
cobalt		5.00	U	5.00	U
copper		6.00	U	65.40	
lead		1.00	UJ	10.30	
mercury		0.20	U	0.20	U
molybdenum		7.00	UR	7.00	U
nickel		13.30	U	9.00	U
selenium		14.00	BJ	2.00	UJ
silver		8.30	BJ	4.00	B
thallium		10.00	UJ	2.00	U
vanadium		65.50		5.50	B
zinc		29.90		742.00	
cyanide		*		0.02	U

NOTE:

* Not required for analysis.

VOLATILE ORGANICS DATA	SAMPLE ID	NS8-BH2-SO2-15		NS8-ER-1-30-91		NS8-TB-1-30-91		VBLK1		VBLK3	
CLIENT NAME - IT CORPORATION	MATRIX	SOLID		SOLID		SOLID		SOLID		SOLID	
SITE - SAN DIEGO NAVSTA	DILUTION	5.00		1.00		1.00		1.00		1.00	
PREPARATION DATE 13 JULY 91	BLANK ID	VBLK3		VBLK1		VBLK1		02/08/91		02/11/91	
FILE ID - VS8-791S	UNITS	ug/kg		ug/kg		ug/kg		ug/kg		ug/kg	
	% SOLIDS	83		100		100		100		100	
FILE PRINT DATE---------->	31-Jan-92										
acetone		73		12		10	U	10	U	10	U

VOLATILE ORGANICS DATA	SAMPLE ID	NS8-BH2-SO2-15		NS8-ER-1-30-91		NS8-TB-1-30-91		VBLK1		VBLK3	
CLIENT NAME - IT CORPORATION	MATRIX	SOLID		SOLID		SOLID		SOLID		SOLID	
SITE - SAN DIEGO NAVSTA	DILUTION	5.00		1.00		1.00		1.00		1.00	
PREPARATION DATE 13 JULY 91	BLANK ID	VBLK3		VBLK1		VBLK1		02/08/91		02/11/91	
FILE ID - VS8-791	UNITS	ug/kg		ug/kg		ug/kg		ug/kg		ug/kg	
	% SOLIDS	83		100		100		100		100	
FILE PRINT DATE---------->	31-Jan-92										
chloromethane		60	U	10	U	10	U	10	U	10	U
bromomethane		60	U	10	U	10	U	10	U	10	U
vinyl chloride		60	U	10	U	10	U	10	U	10	U
chloroethane		60	U	10	U	10	U	10	U	10	U
methylene chloride		83	U	4	BJ	4	BJ	7		12	
acetone		73		12		10	U	10	U	10	U
carbon disulfide		30	U	5	U	5	U	5	U	5	U
1,1-dichloroethene		30	U	5	U	5	U	5	U	5	U
1,1-dichloroethane		30	U	5	U	5	U	5	U	5	U
1,2-dichloroethene (total)		30	U	5	U	5	U	5	U	5	U
chloroform		30	U	10		5	U	5	U	5	U
1,2-dichloroethane		30	U	5	U	5	U	5	U	5	U
2-butanone (MEK)		60	U	10	U	10	U	10	U	10	U
1,1,1-trichloroethane		30	U	5	U	5	U	5	U	5	U
carbon tetrachloride		30	U	5	U	5	U	5	U	5	U
vinyl acetate		60	U	10	U	10	U	10	U	10	U
bromodichloromethane		30	U	5		5	U	5	U	5	U
1,2-dichloropropane		30	U	5	U	5	U	5	U	5	U
cis-1,3-dichloropropene		30	U	5	U	5	U	5	U	5	U
trichloroethene (TCE)		30	U	5	U	5	U	5	U	5	U
dibromochloromethane		30	U	4	J	5	U	5	U	5	U
1,1,2-trichloroethane		30	U	5	U	5	U	5	U	5	U
benzene		30	U	5	U	5	U	5	U	5	U
trans-1,3-dichloropropene		30	U	5	U	5	U	5	U	5	U
bromoform		30	U	5	U	5	U	5	U	5	U
4-methyl-2-pentanone		60	U	10	U	10	U	10	U	10	U
2-hexanone (MBK)		60	U	10	U	10	U	10	U	10	U
tetrachloroethene (PCE)		30	U	5	U	5	U	5	U	5	U
1,1,2,2-tetrachloroethane		30	U	5	U	5	U	5	U	5	U
toluene		30	U	5	U	5	U	5	U	5	U
chlorobenzene		30	U	5	U	5	U	5	U	5	U
ethyl benzene		30	U	5	U	5	U	5	U	5	U
styrene		30	U	5	U	5	U	5	U	5	U
total xylenes		30	U	5	U	5	U	5	U	5	U

VOLATILE ORGANICS DATA	SAMPLE ID	NS8-MW1-GW1	NS8-MW06-GW1	NS8-ER-2-14-91	VBLK4	VBLK5
CLIENT - IT CORPORATION	MATRIX	WATER	WATER	WATER	WATER	WATER
SITE - SAN DIEGO NAVSTA	DILUTION	1.00	1.00	1.00	1.00	1.00
PREPARATION DATE 13 JULY 91	BLANK ID	VBLK4	VBLK4	VBLK5	02/23/91	02/25/91
FILE ID - V8-791S	UNITS	ug/L	ug/L			
FILE PRINT DATE------->	31-Jan-92					
vinyl chloride		8 J	10 U	10 U	10 U	10 U
1,1-dichloroethane		30	5 U	5 U	5 U	5 U
1,2-dichloroethene (total)		21	5 U	5 U	5 U	5 U
benzene		180	47	5 U	5 U	5 U
toluene		1 J	5 U	5 U	5 U	5 U
ethyl benzene		12	2 J	5 U	5 U	5 U

VOLATILE ORGANICS DATA	SAMPLE ID	NS8-MW1-GW1	NS8-MW06-GW1	NS8-ER-2-14-91	VBLK4	VBLK5
CLIENT - IT CORPORATION	MATRIX	WATER	WATER	WATER	WATER	WATER
SITE - SAN DIEGO NAVSTA	DILUTION	1.00	1.00	1.00	1.00	1.00
PREPARATION DATE 13 JULY 91	BLANK ID	VBLK4	VBLK4	VBLK5	02/23/91	02/25/91
FILE ID - V8-791	UNITS	ug/L	ug/L	ug/L	ug/L	ug/L
FILE PRINT DATE------->	31-Jan-92					
chloromethane		10 U	10 U	10 U	10 U	10 U
bromomethane		10 U	10 U	10 U	10 U	10 U
vinyl chloride		8 J	10 U	10 U	10 U	10 U
chloroethane		10 U	10 U	10 U	10 U	10 U
methylene chloride		5 U	5 U	5 U	3 J	2 J
acetone		10 U	10 U	10 U	10 U	10 U
carbon disulfide		5 U	5 U	5 U	5 U	5 U
1,1-dichloroethene		5 U	5 U	5 U	5 U	5 U
1,1-dichloroethane		30	5 U	5 U	5 U	5 U
1,2-dichloroethene (total)		21	5 U	5 U	5 U	5 U
chloroform		5 U	5 U	13	5 U	5 U
1,2-dichloroethane		5 U	5 U	5 U	5 U	5 U
2-butanone		10 U	10 U	10 U	10 U	10 U
1,1,1-trichloroethane		5 U	5 U	5 U	5 U	5 U
carbon tetrachloride		5 U	5 U	5 U	5 U	5 U
vinyl acetate		10 U	10 U	10 U	10 U	10 U
bromodichloromethane		5 U	5 U	4 J	5 U	5 U
1,2-dichloropropane		5 U	5 U	5 U	5 U	5 U
cis-1,3-dichloropropene		5 U	5 U	5 U	5 U	5 U
trichloroethene		5 U	5 U	5 U	5 U	5 U
dibromochloromethane		5 U	5 U	3 J	5 U	5 U
1,1,2-trichloroethane		5 U	5 U	5 U	5 U	5 U
benzene		180	47	5 U	5 U	5 U
trans-1,3-dichloropropene		5 U	5 U	5 U	5 U	5 U
bromoform		5 U	5 U	5 U	5 U	5 U
4-methyl-2-pentanone		10 U	10 U	10 U	10 U	10 U
2-hexanone		10 U	10 U	10 U	10 U	10 U
tetrachloroethene		5 U	5 U	5 U	5 U	5 U
1,1,2,2-tetrachloroethane		5 U	5 U	5 U	5 U	5 U
toluene		1 J	5 U	5 U	5 U	5 U
chlorobenzene		5 U	5 U	5 U	5 U	5 U
ethyl benzene		12	2 J	5 U	5 U	5 U
styrene		5 U	5 U	5 U	5 U	5 U
total xylenes		5 U	5 U	5 U	5 U	5 U

SEMIVOLATILE ORGANICS DATA	SAMPLE ID	NS8-BH2-S02-15	SBLK1	
CLIENT - IT CORPORATION	MATRIX	SOLID	SOLID	
SITE NAME - SAN DIEGO NAVSTA	DILUTION	1.00	1.00	
PREPARATION DATE - 13 JULY 91	BLANK ID	SBLK1	02/23/91	
FILE ID - SVS8791S	UNITS	ug/kg	ug/kg	
	% SOLIDS	83	100	
FILE PRINT DATE ------>	31-Jan-92			
naphthalene		550	330	U
2-methylnaphthalene		1800	330	U
fluorene		62 J	330	U
phenanthrene		51 J		

SEMIVOLATILE ORGANICS DATA	SAMPLE ID	NS8-BH2-S02-15		SBLK1	
CLIENT - IT CORPORATION	MATRIX	SOLID		SOLID	
SITE NAME - SAN DIEGO NAVSTA	DILUTION	1.00		1.00	
PREPARATION DATE - 13 JULY 91	BLANK ID	SBLK1		02/23/91	
FILE ID - SVS8-791	UNITS	ug/kg		ug/kg	
	% SOLIDS	83		100	
FILE PRINT DATE ------>	31-Jan-92				
phenol		398	U	330	U
bis(2-chloroethyl)ether		398	U	330	U
2-chlorophenol		398	U	330	U
1,3-dichlorobenzene		398	U	330	U
1,4-dichlorobenzene		398	U	330	U
benzyl alcohol		398	U	330	U
1,2-dichlorobenzene		398	U	330	U
2-methylphenol		398	U	330	U
bis(2-chloroisopropyl)ether		398	U	330	U
4-methylphenol		398	U	330	U
N-nitrosodipropylamine		398	U	330	U
hexachloroethane		398	U	330	U
nitrobenzene		398	U	330	U
isophorone		398	U	330	U
2-nitrophenol		398	U	330	U
2,4-dimethylphenol		398	U	330	U
benzoic acid		1928	U	1600	U
bis(2-chloroethoxy)methane		398	U	330	U
2,4-dichlorophenol		398	U	330	U
1,2,4-trichlorobenzene		398	U	330	U
naphthalene		550		330	U
4-chloroaniline		398	U	330	U
hexacholorobutadiene		398	U	330	U
4-chloro-3-methylphenol		398	U	330	U
2-methylnaphthalene		1800		330	U
hexachlorocyclopentadiene		398	U	330	U
2,4,6-trichlorophenol		398	U	330	U
2,4,5-trichlorophenol		1928	U	1600	U
2-chloronaphthalene		398	U	330	U
2-nitroaniline		1928	U	1600	U
dimethyl phthalate		398	U	330	U
acenaphthylene		398	U	330	U
2,6-dinitrotoluene		398	U	330	U
3-nitroaniline		1928	U	1600	U

SEMIVOLATILE ORGANICS DATA	SAMPLE ID	NS8-BH2-S02-15		SBLK1	
CLIENT - IT CORPORATION	MATRIX	SOLID		SOLID	
SITE NAME - SAN DIEGO NAVSTA	DILUTION	1.00		1.00	
PREPARATION DATE - 13 JULY 91	BLANK ID	SBLK1		02/23/91	
FILE ID - SVS8-791	UNITS	ug/kg		ug/kg	
	% SOLIDS	83		100	
FILE PRINT DATE ------->	31-Jan-92				
acenaphthene		398	U	330	U
2,4-dinitrophenol		1928	U	1600	U
4-nitrophenol		1928	U	1600	U
dibenzofuran		398	U	330	U
2,4-dinitrotoluene		398	U	330	U
diethylphthalate		398	U	330	U
4-chlorophenyl phenyl ether		398	U	330	U
fluorene		62	J	330	U
4-nitroaniline		1928	U	1600	U
4,6-dinitro-2-methylphenol		1928	U	1600	U
N-nitrosodiphenylamine		398	U	330	U
4-bromophenyl phenyl ether		398	U	330	U
hexachlorobenzene		398	U	330	U
pentachlorophenol		1928	U	1600	U
phenanthrene		51	J	330	U
anthracene		398	U	330	U
di-n-butyl phthalate		398	U	330	U
fluoranthene		398	U	330	U
pyrene		398	U	330	U
butyl benzyl phthalate		398	U	330	U
3,3'-dichlorobenzidine		795	U	660	U
benzo(a)anthracene		398	U	330	U
chrysene		398	U	330	U
bis(2-ethylhexyl)phthalate		398	U	330	U
di-n-octyl phthalate		398	U	330	U
benzo(b)fluoranthene		398	U	330	U
benzo(k)fluoranthene		398	U	330	U
benzo(a)pyrene		398	U	330	U
indeno(1,2,3-cd)pyrene		398	U	330	U
dibenzo(a,h)anthracene		398	U	330	U
benzo(g,h,i,)perylene		398	U	330	U

SEMIVOLATILE ORGANICS DATA	SAMPLE ID	NS8-MW1-GW1		NS8-MW06-GW1		NS8-ER-1-30-91		NS8-ER-2-14-91		SBLK1		SBLK4	
CLIENT - IT CORPORATION	MATRIX	WATER		WATER		WATER		WATER		WATER		WATER	
SITE NAME - SAN DIEGO NAVSTA	DILUTION	1.00		1.00		1.00		1.00		1.00		1.00	
PREPARATION DATE - 13 JULY 91	BLANK ID	SBLK4		SBLK4		SBLK1		SBLK4		02/11/91		03/18/91	
FILE ID - SV8-791S	UNITS	ug/l		ug/l		ug/l		ug/l		ug/l		ug/l	
FILE PRINT DATE ---->	31-Jan-92												
phenol		9	J	16	J	10	U	10	U	10	U	10	U

SEMIVOLATILE ORGANICS DATA	SAMPLE ID	NS8-MW1-GW1	NS8-MW06-GW1	NS8-ER-1-30-91	NS8-ER-2-14-91	SBLK1	SBLK4
CLIENT - IT CORPORATION	MATRIX	WATER	WATER	WATER	WATER	WATER	WATER
SITE NAME - SAN DIEGO NAVSTA	DILUTION	1.00	1.00	1.00	1.00	1.00	1.00
PREPARATION DATE - 13 JULY 91	BLANK ID	SBLK4	SBLK4	SBLK1	SBLK4	02/11/91	03/18/91
FILE ID - SV8-791	UNITS	ug/l	ug/l	ug/l	ug/l	ug/l	ug/l
FILE PRINT DATE ---->	31-Jan-92						
phenol		9 J	16 J	10 U	10 U	10 U	10 U
bis(2-chloroethyl)ether		10 U	10 U	10 U	10 UJ	10 U	10 U
2-chlorophenol		10 U	10 U	10 U	10 U	10 U	10 U
1,3-dichlorobenzene		10 U	10 U	10 U	10 UJ	10 U	10 U
1,4-dichlorobenzene		10 U	10 U	10 U	10 UJ	10 U	10 U
benzyl alcohol		10 U	10 U	10 U	10 UJ	10 U	10 U
1,2-dichlorobenzene		10 U	10 U	10 U	10 UJ	10 U	10 U
2-methylphenol		10 U	10 U	10 U	10 U	10 U	10 U
bis(2-chloroisopropyl)ether		10 U	10 U	10 U	10 UJ	10 U	10 U
4-methylphenol		10 U	10 U	10 U	10 U	10 U	10 U
N-nitrosodipropylamine		10 U	10 U	10 U	10 UJ	10 U	10 U
hexachloroethane		10 U	10 U	10 U	10 UJ	10 U	10 U
nitrobenzene		10 U	10 U	10 U	10 UJ	10 U	10 U
isophorone		10 U	10 U	10 U	10 UJ	10 U	10 U
2-nitrophenol		10 U	10 U	10 U	10 U	10 U	10 U
2,4-dimethylphenol		10 U	10 U	10 U	10 U	10 U	10 U
benzoic acid		50 U	50 U	50 U	50 U	50 U	50 U
bis(2-chloroethoxy)methane		10 U	10 U	10 U	10 UJ	10 U	10 U
2,4-dichlorophenol		10 U	10 U	10 U	10 U	10 U	10 U
1,2,4-trichlorobenzene		10 U	10 U	10 U	10 UJ	10 U	10 U
naphthalene		10 U	10 U	10 U	10 UJ	10 U	10 U
4-chloroaniline		10 U	10 U	10 U	10 UJ	10 U	10 U
hexacholorobutadiene		10 U	10 U	10 U	10 UJ	10 U	10 U
4-chloro-3-methylphenol		10 U	10 U	10 U	10 U	10 U	10 U
2-methylnaphthalene		10 U	10 U	10 U	10 UJ	10 U	10 U
hexachlorocyclopentadiene		10 U	10 U	10 U	10 UJ	10 U	10 U
2,4,6-trichlorophenol		10 U	10 U	10 U	10 U	10 U	10 U
2,4,5-trichlorophenol		50 U	50 U	50 U	50 U	50 U	50 U
2-chloronaphthalene		10 U	10 U	10 U	10 UJ	10 U	10 U
2-nitroaniline		50 U	50 U	50 U	50 UJ	50 U	50 U
dimethyl phthalate		10 U	10 U	10 U	10 U	10 U	10 U
acenaphthylene		10 U	10 U	10 U	10 UJ	10 U	10 U
2,6-dinitrotoluene		10 U	10 U	10 U	10 UJ	10 U	10 U
3-nitroaniline		50 U	50 U	50 U	50 UJ	50 U	50 U
acenaphthene		10 U	10 U	10 U	10 UJ	10 U	10 U

SEMIVOLATILE ORGANICS DATA	SAMPLE ID	NS8-MW1-GW1	NS8-MW06-GW1	NS8-ER-1-30-91	NS8-ER-2-14-91	SBLK1	SBLK4
CLIENT - IT CORPORATION	MATRIX	WATER	WATER	WATER	WATER	WATER	WATER
SITE NAME - SAN DIEGO NAVSTA	DILUTION	1.00	1.00	1.00	1.00	1.00	1.00
PREPARATION DATE - 13 JULY 91	BLANK ID	SBLK4	SBLK4	SBLK1	SBLK4	02/11/91	03/18/91
FILE ID - SV8-791	UNITS	ug/l	ug/l	ug/l	ug/l	ug/l	ug/l
FILE PRINT DATE ---->	31-Jan-92						
2,4-dinitrophenol		50 U	50 U	50 U	50 U	50 U	50 U
4-nitrophenol		50 U	50 U	50 U	50 U	50 U	50 U
dibenzofuran		10 U	10 U	10 U	10 UJ	10 U	10 U
2,4-dinitrotoluene		10 U	10 U	10 U	10 UJ	10 U	10 U
diethylphthalate		10 U	10 U	10 U	10 U	10 U	10 U
4-chlorophenyl phenyl ether		10 U	10 U	10 U	10 UJ	10 U	10 U
fluorene		10 U	10 U	10 U	10 UJ	10 U	10 U
4-nitroaniline		50 U	50 U	50 U	50 UJ	50 U	50 U
4,6-dinitro-2-methylphenol		50 U	50 U	50 U	50 U	50 U	50 U
N-nitrosodiphenylamine		10 U	10 U	10 U	10 UJ	10 U	10 U
4-bromophenyl phenyl ether		10 U	10 U	10 U	10 UJ	10 U	10 U
hexachlorobenzene		10 U	10 U	10 U	10 UJ	10 U	10 U
pentachlorophenol		50 U	50 U	50 U	50 U	50 U	50 U
phenanthrene		10 U	10 U	10 U	10 UJ	10 U	10 U
anthracene		10 U	10 U	10 U	10 UJ	10 U	10 U
di-n-butyl phthalate		10 U	10 U	10 U	10 U	10 U	10 U
fluoranthene		10 U	10 U	10 U	10 UJ	10 U	10 U
pyrene		10 U	10 U	10 U	10 UJ	10 U	10 U
butyl benzyl phthalate		10 U	10 U	10 U	10 U	10 U	10 U
3,3'-dichlorobenzidine		20 U	20 U	20 U	20 UJ	20 U	20 U
benzo(a)anthracene		10 U	10 U	10 U	10 UJ	10 U	10 U
chrysene		10 U	10 U	10 U	10 UJ	10 U	10 U
bis(2-ethylhexyl)phthalate		10 U	10 U	10 U	10 U	10 U	10 U
di-n-octyl phthalate		10 U	10 U	10 U	10 U	10 U	10 U
benzo(b)fluoranthene		10 U	10 U	10 U	10 UJ	10 U	10 U
benzo(k)fluoranthene		10 U	10 U	10 U	10 UJ	10 U	10 U
benzo(a)pyrene		10 U	10 U	10 U	10 UJ	10 U	10 U
indeno(1,2,3-cd)pyrene		10 U	10 U	10 U	10 UJ	10 U	10 U
dibenzo(a,h)anthracene		10 U	10 U	10 U	10 UJ	10 U	10 U
benzo(g,h,i,)perylene		10 U	10 U	10 U	10 UJ	10 U	10 U

PESTICIDE/PCB DATA	SAMPLE ID	NS8-BH2-SO2-15		MB3	
CLIENT - IT CORPORATION	MATRIX	SOLID		SOLID	
SITE NAME - SAN DIEGO NAVSTA	DILUTION	1.00		1.00	
PREPARATION DATE - 13 JULY 91	BLANK ID	MB3		02/26/91	
FILE ID - PS8-791	UNITS	ug/kg		ug/kg	
	% SOLIDS	83		100	
FILE PRINT DATE ------>	31-Jan-92				
alpha-BHC		9.6	UJ	8.0	U
beta-BHC		9.6	UJ	8.0	U
delta-BHC		9.6	UJ	8.0	U
gamma-BHC (lindane)		9.6	UJ	8.0	U
heptachlor		9.6	UJ	8.0	U
aldrin		9.6	UJ	8.0	U
heptachlor epoxide		9.6	UJ	8.0	U
endosulfan I		9.6	UJ	8.0	U
dieldrin		19.3	UJ	16.0	U
4,4'-DDE		19.3	UJ	16.0	U
endrin		19.3	UJ	16.0	U
endosulfan II		19.3	UJ	16.0	U
4,4'-DDD		19.3	UJ	16.0	U
endosulfan sulfate		19.3	UJ	16.0	U
4,4'-DDT		19.3	UJ	16.0	U
methoxychlor		96.4	UJ	80.0	U
endrin ketone		19.3	UJ	16.0	U
alpha-chlordane		96.4	UJ	80.0	U
gamma-chlordane		96.4	UJ	80.0	U
toxaphene		192.8	UJ	160.0	U
AROCLOR-1016		96.4	UJ	80.0	U
AROCLOR-1221		96.4	UJ	80.0	U
AROCLOR-1232		96.4	UJ	80.0	U
AROCLOR-1242		96.4	UJ	80.0	U
AROCLOR-1248		96.4	UJ	80.0	U
AROCLOR-1254		192.8	UJ	160.0	U
AROCLOR-1260		192.8	UJ	160.0	U

PESTICIDE/PCB DATA	SAMPLE ID	NS8-MW1-GW1	NS8-MW06-GW1	NS8-ER-1-30-91	NS8-ER-2-14-91	MB1	MB3	MB4
CLIENT NAME - IT CORPORATION	MATRIX	WATER	WATER	WATER	WATER	WATER	WATER	WATER
SITE NAME - SAN DIEGO NAVSTA	DILUTION	1.00	1.00	1.00	1.00	1.00	1.00	1.00
PREPARATION DATE - 13 JULY 91	BLANK ID	MB4	MB4	MB1	MB3	02/08/91	03/22/91	03/27/91
FILE ID - P8-791	UNITS	ug/l	ug/l	ug/l	ug/l	ug/l	ug/l	ug/l
FILE PRINT DATE ------>	31-Jan-92							
alpha-BHC		0.050 U	0.050 UJ	0.050 U	0.050 U	0.050 U	0.050 U	0.050 U
beta-BHC		0.050 U	0.050 UJ	0.050 U	0.050 U	0.050 U	0.050 U	0.050 U
delta-BHC		0.050 U	0.050 UJ	0.050 U	0.050 U	0.050 U	0.050 U	0.050 U
gamma-BHC (lindane)		0.050 U	0.050 UJ	0.050 U	0.050 U	0.050 U	0.050 U	0.050 U
heptachlor		0.050 U	0.050 UJ	0.050 U	0.050 U	0.050 U	0.050 U	0.050 U
aldrin		0.050 U	0.050 UJ	0.050 U	0.050 U	0.050 U	0.050 U	0.050 U
heptachlor epoxide		0.050 U	0.050 UJ	0.050 U	0.050 U	0.050 U	0.050 U	0.050 U
endosulfan I		0.050 U	0.050 UJ	0.050 U	0.050 U	0.050 U	0.050 U	0.050 U
dieldrin		0.100 U	0.100 UJ	0.100 U	0.100 U	0.100 U	0.100 U	0.100 U
4,4'-DDE		0.100 U	0.100 UJ	0.100 U	0.100 U	0.100 U	0.100 U	0.100 U
endrin		0.100 U	0.100 UJ	0.100 U	0.100 U	0.100 U	0.100 U	0.100 U
endosulfan II		0.100 U	0.100 UJ	0.100 U	0.100 U	0.100 U	0.100 U	0.100 U
4,4'-DDD		0.100 U	0.100 UJ	0.100 U	0.100 U	0.100 U	0.100 U	0.100 U
endosulfan sulfate		0.100 U	0.100 UJ	0.100 U	0.100 U	0.100 U	0.100 U	0.100 U
4,4'-DDT		0.100 U	0.100 UJ	0.100 U	0.100 U	0.100 U	0.100 U	0.100 U
methoxychlor		0.500 U	0.500 UJ	0.500 U	0.500 U	0.500 U	0.500 U	0.500 U
endrin ketone		0.100 U	0.100 UJ	0.100 U	0.100 U	0.100 U	0.100 U	0.100 U
alpha-chlordane		0.500 U	0.500 UJ	0.500 U	0.500 U	0.500 U	0.500 U	0.500 U
gamma-chlordane		0.500 U	0.500 UJ	0.500 U	0.500 U	0.500 U	0.500 U	0.500 U
toxaphene		1.000 U	1.000 UJ	1.000 U	1.000 U	1.000 U	1.000 U	1.000 U
AROCLOR-1016		0.500 U	0.500 UJ	0.500 U	0.500 U	0.500 U	0.500 U	0.500 U
AROCLOR-1221		0.500 U	0.500 UJ	0.500 U	0.500 U	0.500 U	0.500 U	0.500 U
AROCLOR-1232		0.500 U	0.500 UJ	0.500 U	0.500 U	0.500 U	0.500 U	0.500 U
AROCLOR-1242		0.500 U	0.500 UJ	0.500 U	0.500 U	0.500 U	0.500 U	0.500 U
AROCLOR-1248		0.500 U	0.500 UJ	0.500 U	0.500 U	0.500 U	0.500 U	0.500 U
AROCLOR-1254		1.000 U	1.000 UJ	1.000 U	1.000 U	1.000 U	1.000 U	1.000 U
AROCLOR-1260		1.000 U	1.000 UJ	1.000 U	1.000 U	1.000 U	1.000 U	1.000 U

INORGANICS DATA	SAMPLE ID	NS8-BH2-SO2-15	
CLIENT - IT CORPORATION	MATRIX	SOLID	
SITE NAME - SAN DIEGO NAVSTA	DILUTION	1.00	
PREPARATION DATE - 15 JULY 91	BLANK ID	NS8-ER-1-30-91	
FILE ID - IS8-791	UNITS	mg/kg	
	% SOLIDS	83.10	
FILE PRINT DATE ------>	31-Jan-92		
antimony		4.30	UJ
arsenic		2.00	BJ
barium		50.90	
beryllium		0.31	B
cadmium		0.91	U
chromium		4.30	
cobalt		2.80	BJ
copper		4.70	UJ
lead		4.00	
mercury		0.18	U
molybdenum		1.60	U
nickel		2.00	UR
selenium		0.23	U
silver		1.20	U
thallium		0.23	UJ
vanadium		17.60	
zinc		12.80	U
cyanide		1.00	UJ

INORGANICS DATA	SAMPLE ID	NS8-MW1-GW1		NS8-MW06-GW1		NS8-ER-1-30-91		NS8-ER-2-14-91	
CLIENT - IT CORPORATION	MATRIX	WATER		WATER		WATER		WATER	
SITE NAME - SAN DIEGO NAVSTA	DILUTION	1.00		1.00		1.00		1.00	
PREPARATION DATE - 15 JULY 91	BLANK ID	NS8-ER-2-14-91		NS8-ER-2-14-91					
FILE ID - i8-791	UNITS	ug/l		ug/l		ug/l		ug/l	
FILE PRINT DATE ------>	31-Jan-92								
antimony		34.00	B	62.80		19.00	U	19.00	U
arsenic		1.70	B	1.70	B	2.00	U	1.00	U
barium		139.00	B	98.60	B	6.10	B	7.30	B
beryllium		1.00	U	1.00	U	1.00	U	1.00	U
cadmium		4.00	U	4.00	U	4.00	U	4.00	U
chromium		4.00	U	4.10	B	4.00	U	4.00	U
cobalt		5.00	U	5.00	U	5.00	U	5.00	U
copper		6.50	U	6.00	U	13.80	B	8.20	B
lead		1.00	UJ	10.00	UJ	1.00	B	1.00	UJ
mercury		0.20	U	0.20	U	0.20	U	0.20	U
molybdenum		7.00	UR	17.40	BJ	7.00	U	7.00	UR
nickel		9.00	U	10.30	U	9.00	U	9.00	U
selenium		1.00	UR	10.00	UR	1.00	U	1.00	UR
silver		3.00	UR	3.00	UR	4.30	B	3.00	U
thallium		1.00	UJ	10.00	UJ	1.00	U	1.00	UJ
vanadium		17.90	U	83.20		3.60	B	15.50	B
zinc		16.60	U	4.50	U	26.50		9.00	B
cyanide		*		*		0.02	UJ	*	

NOTE:

* *Not requested for analysis.*

APPENDIX E

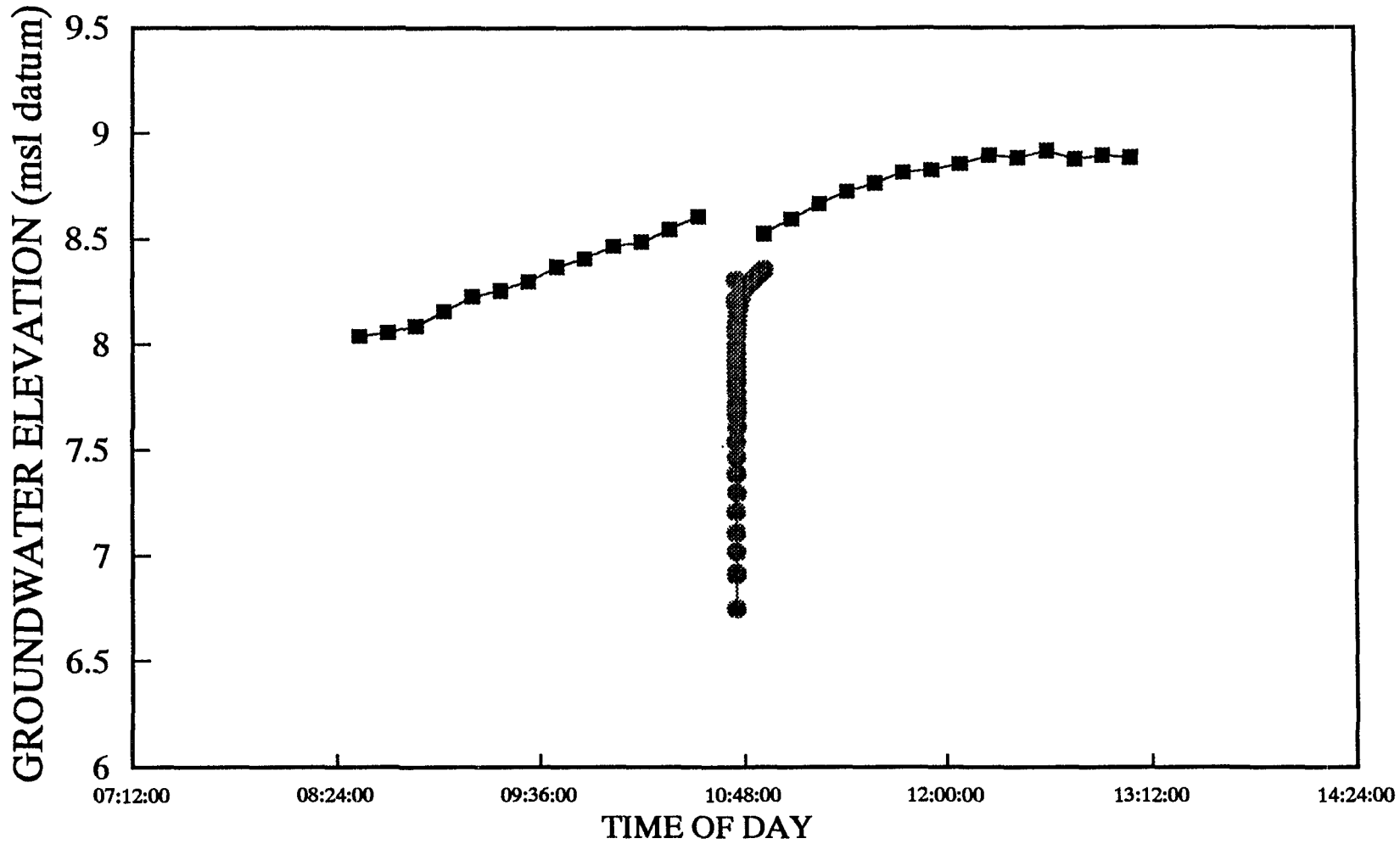

LEGEND

Measured Drawdown

Regression line

RESIDUAL DRAWDOWN CURVE
NS2-MW02

NAVAL STATION
SAN DIEGO, CALIFORNIA

INTERNATIONAL TECHNOLOGY CORPORATION

ns2MW2D.drw/409767/1-24-92/js

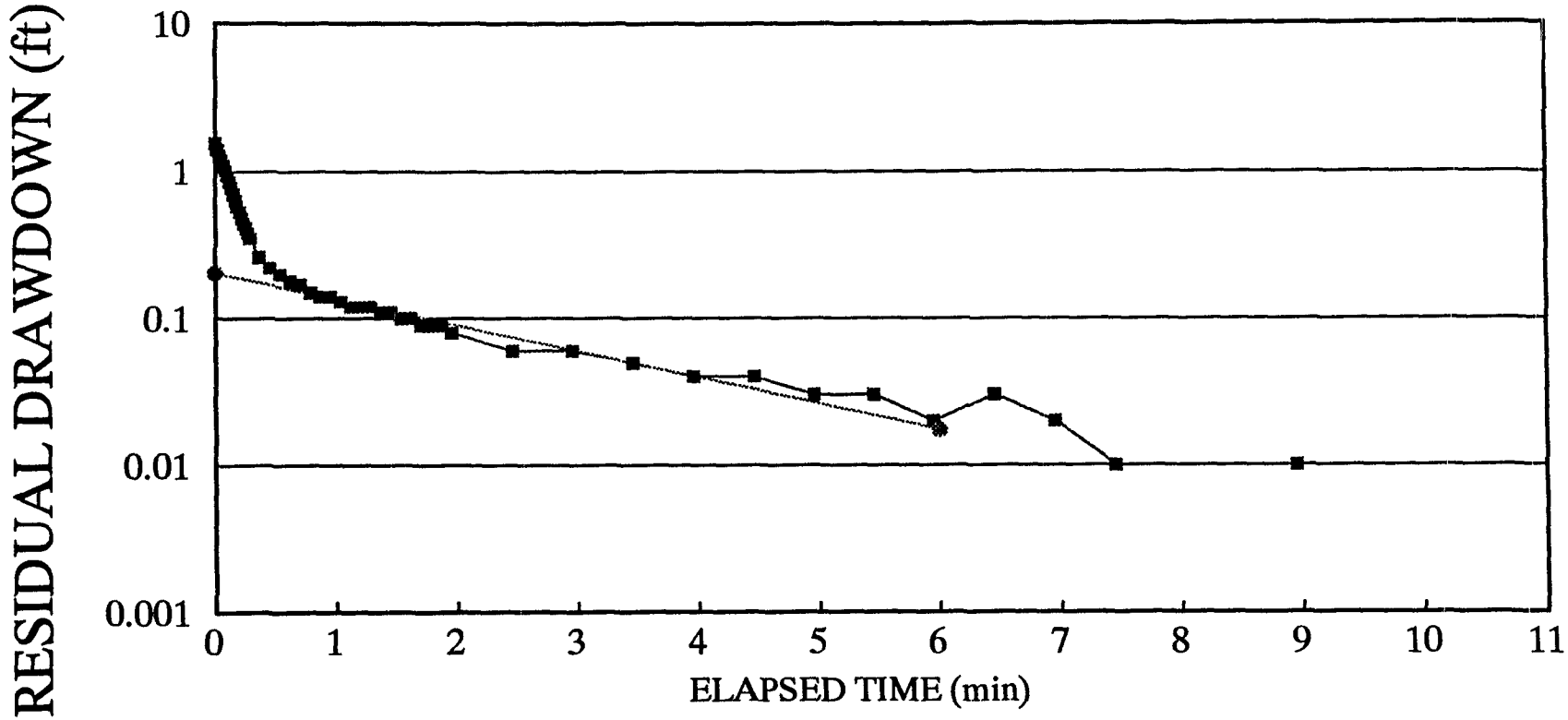

LEGEND

Measured Drawdown

Regression line

RESIDUAL DRAWDOWN CURVE
NS2-MW2T

NAVAL STATION
SAN DIEGO, CALIFORNIA

INTERNATIONAL TECHNOLOGY CORPORATION

ns2mw2t.drw/409767/1-24-92/js

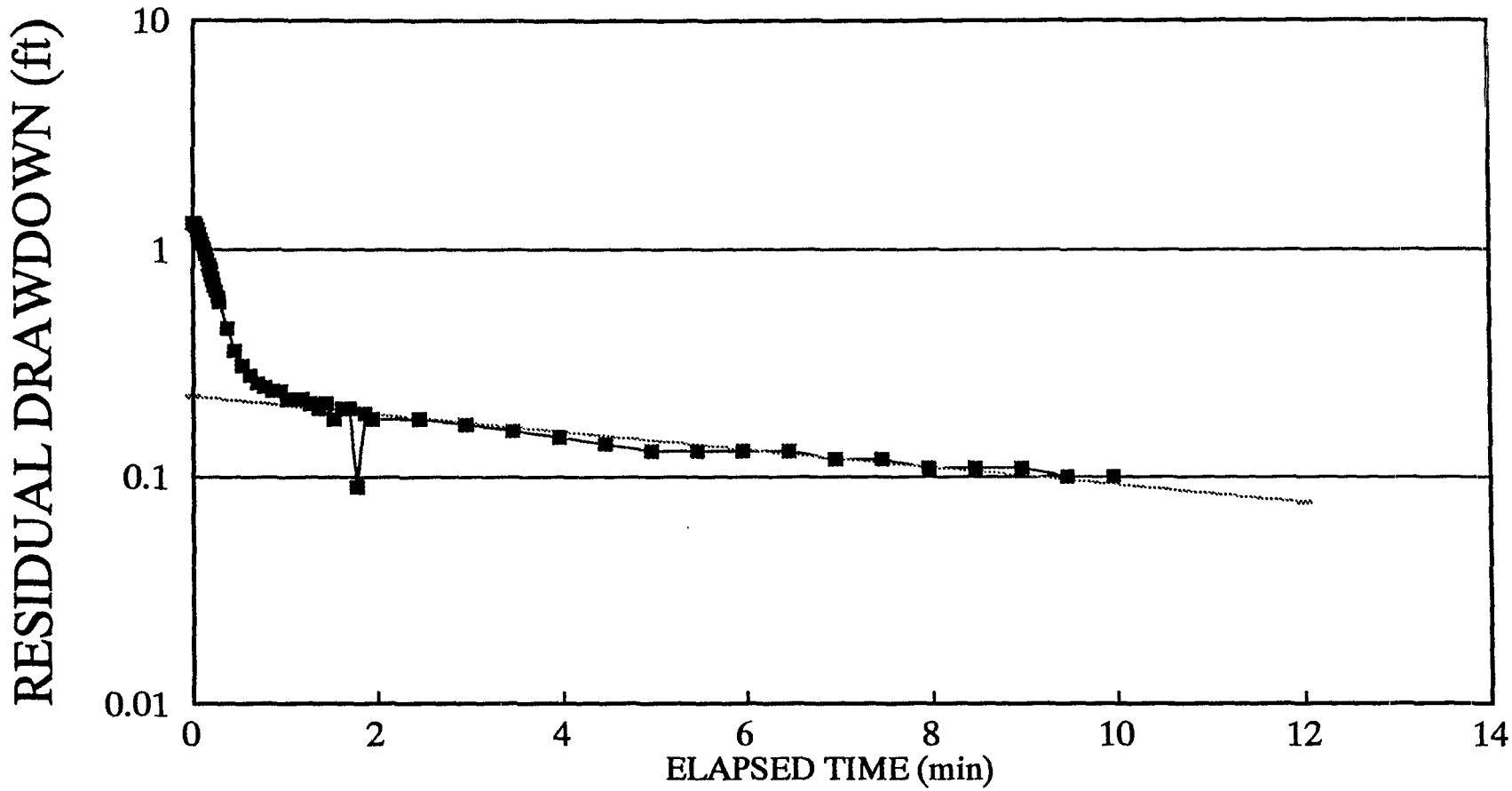

RESIDUAL DRAWDOWN CURVE
NS2-MW4T

NAVAL STATION
SAN DIEGO, CALIFORNIA

INTERNATIONAL TECHNOLOGY CORPORATION

LEGEND

Measured Drawdown

Regression line

ns2mw4t.drw/409767/1-24-92/js

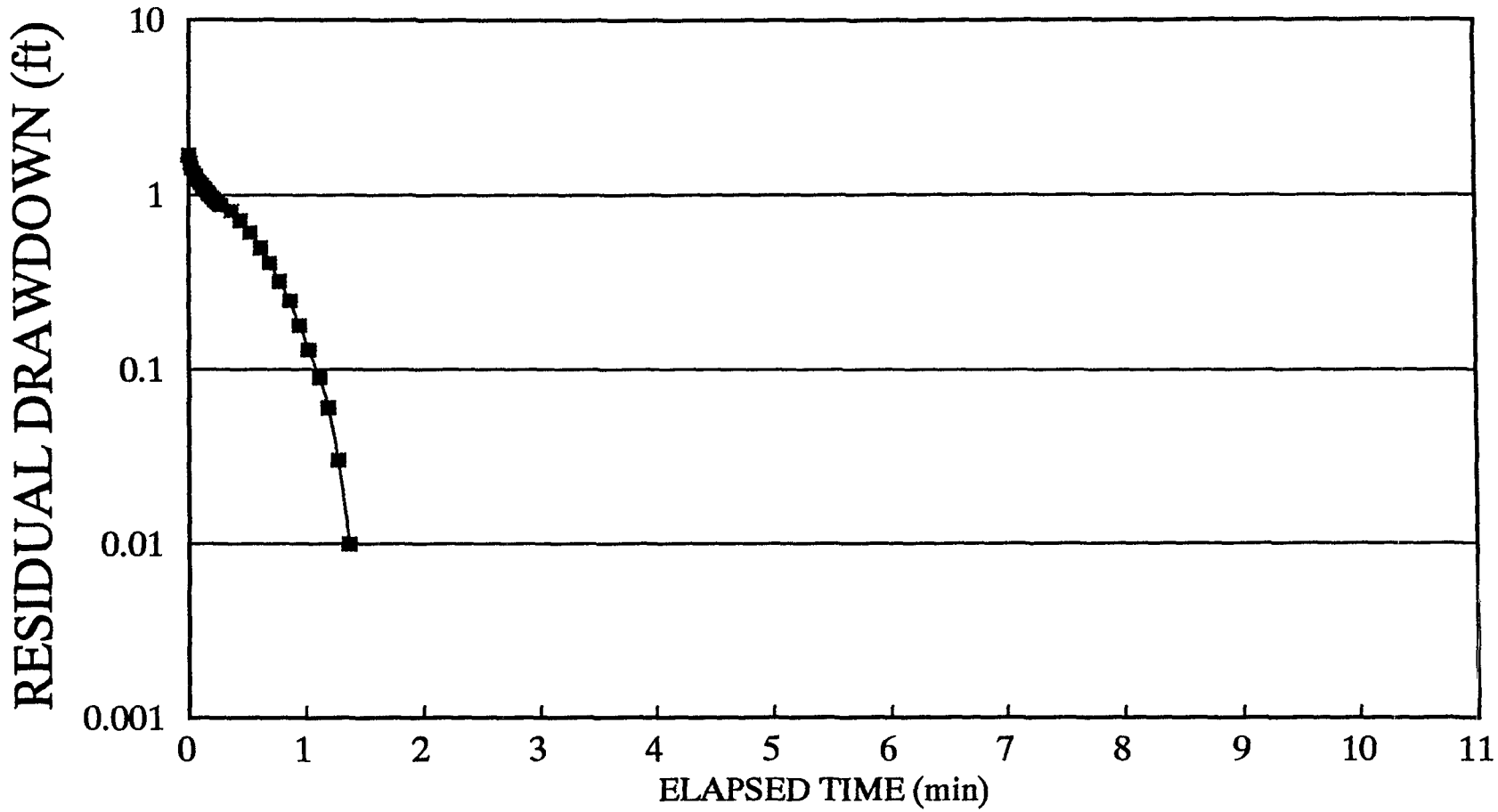

LEGEND

Measured Drawdown

Regression line

RESIDUAL DRAWDOWN CURVE
NS2-MW5T

NAVAL STATION

SAN DIEGO, CALIFORNIA

INTERNATIONAL TECHNOLOGY CORPORATION

ns2mw2t.drw/409767/1-24-92/js

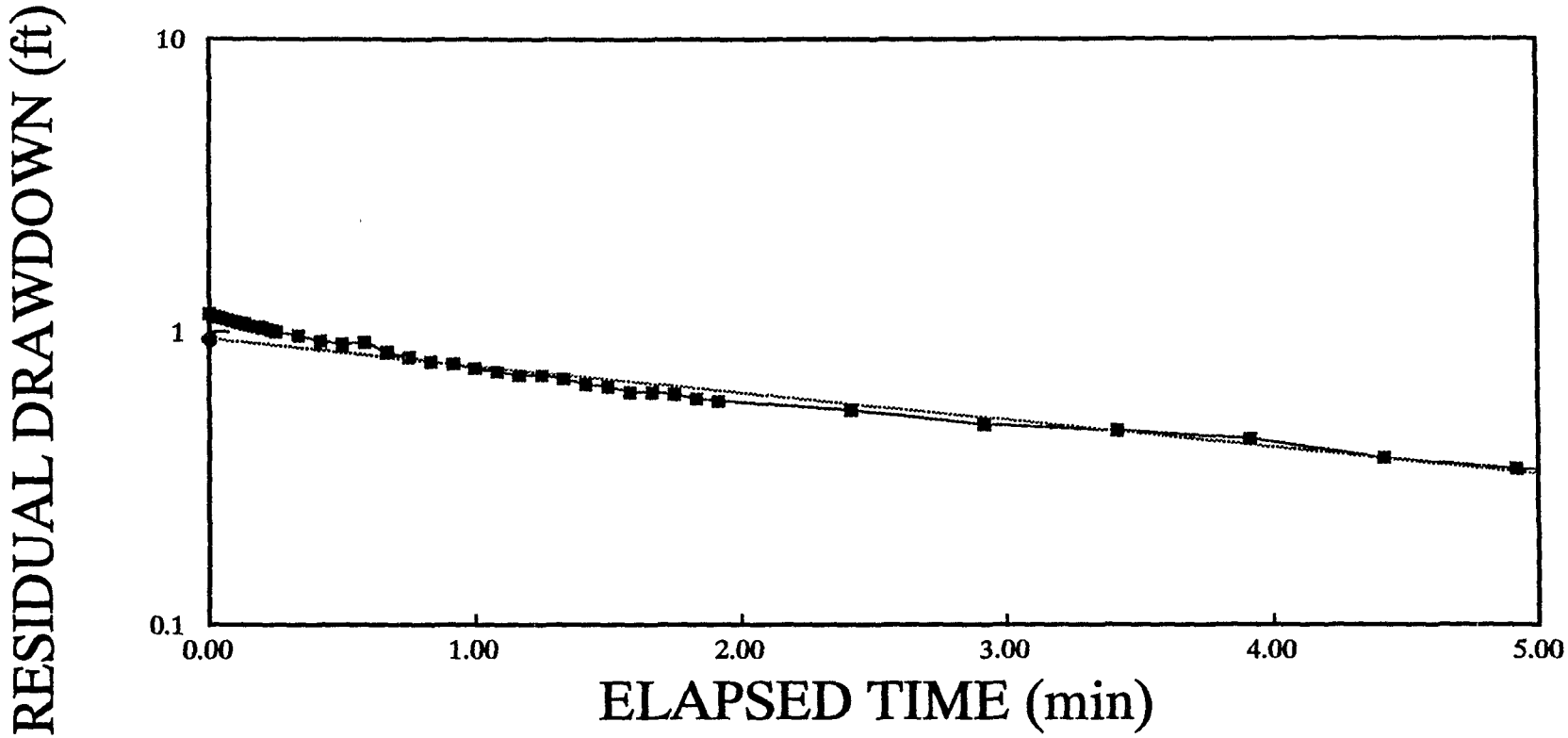

LEGEND

Measured Drawdown

Regression line

RESIDUAL DRAWDOWN CURVE
NS2-MW10

NAVAL STATION
SAN DIEGO, CALIFORNIA

INTERNATIONAL TECHNOLOGY CORPORATION

NS2-MW10.drw/409767/1-24-92/js

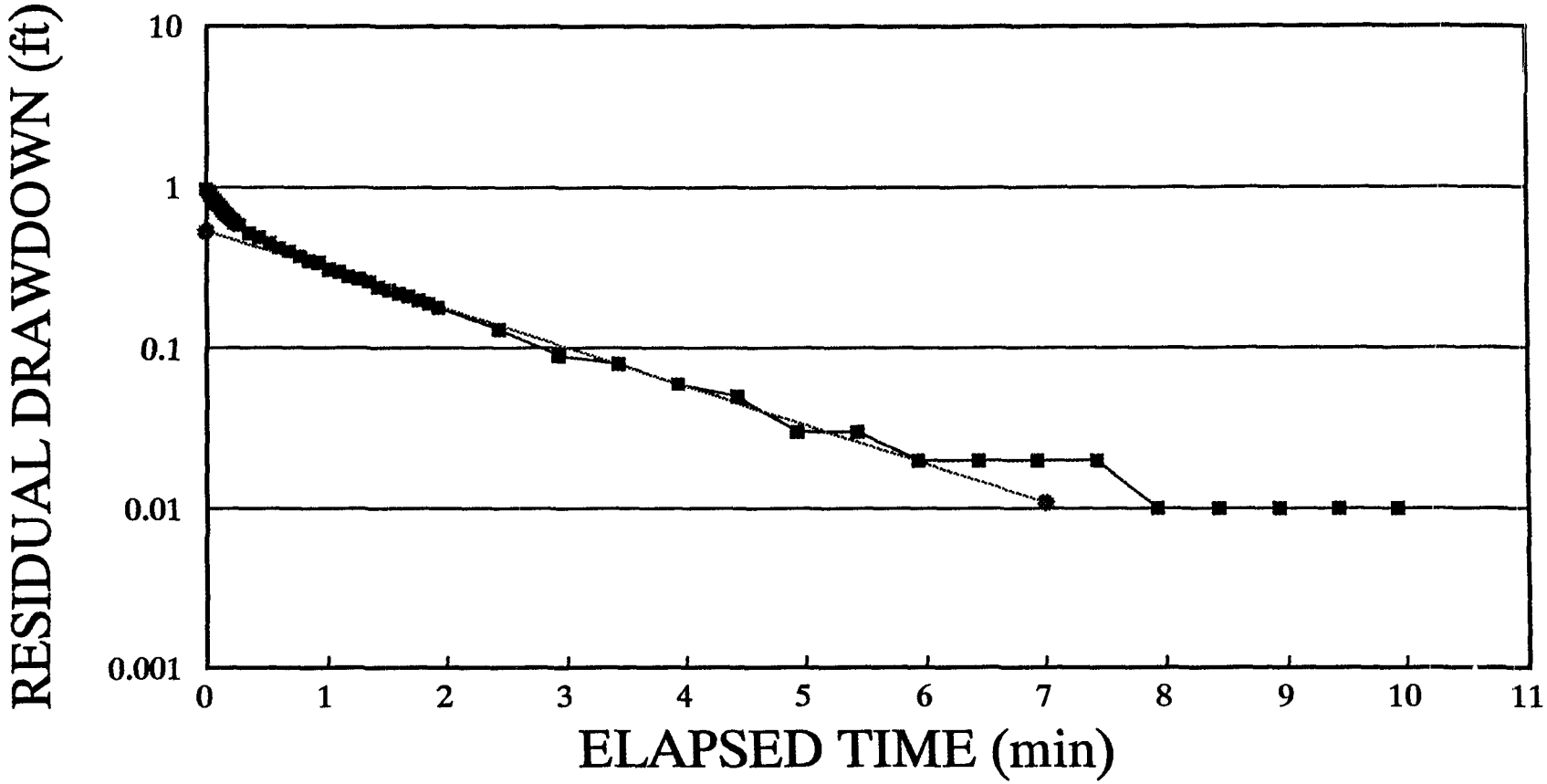

RESIDUAL DRAWDOWN CURVE
NS2-MW11

NAVAL STATION
SAN DIEGO, CALIFORNIA

LEGEND

Measured Drawdown

Regression line

INTERNATIONAL TECHNOLOGY CORPORATION

ns2mw11.drw/409767/1-24-92/js

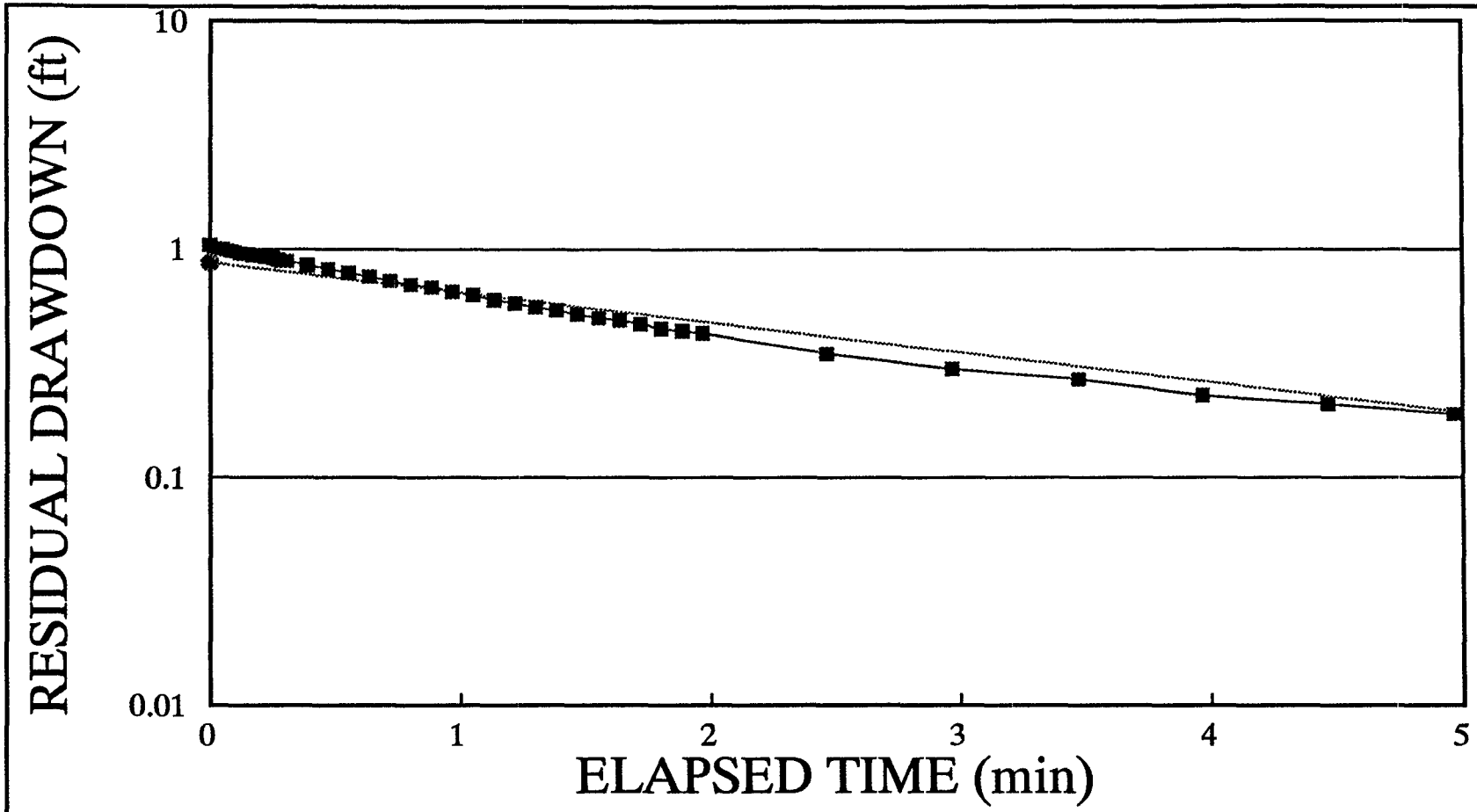

RESIDUAL DRAWDOWN CURVE
NS2-MW12

NAVAL STATION
SAN DIEGO, CALIFORNIA

INTERNATIONAL TECHNOLOGY CORPORATION

LEGEND

Measured Drawdown

Regression line

ns2mw12.drw/409767/1-24-92/js

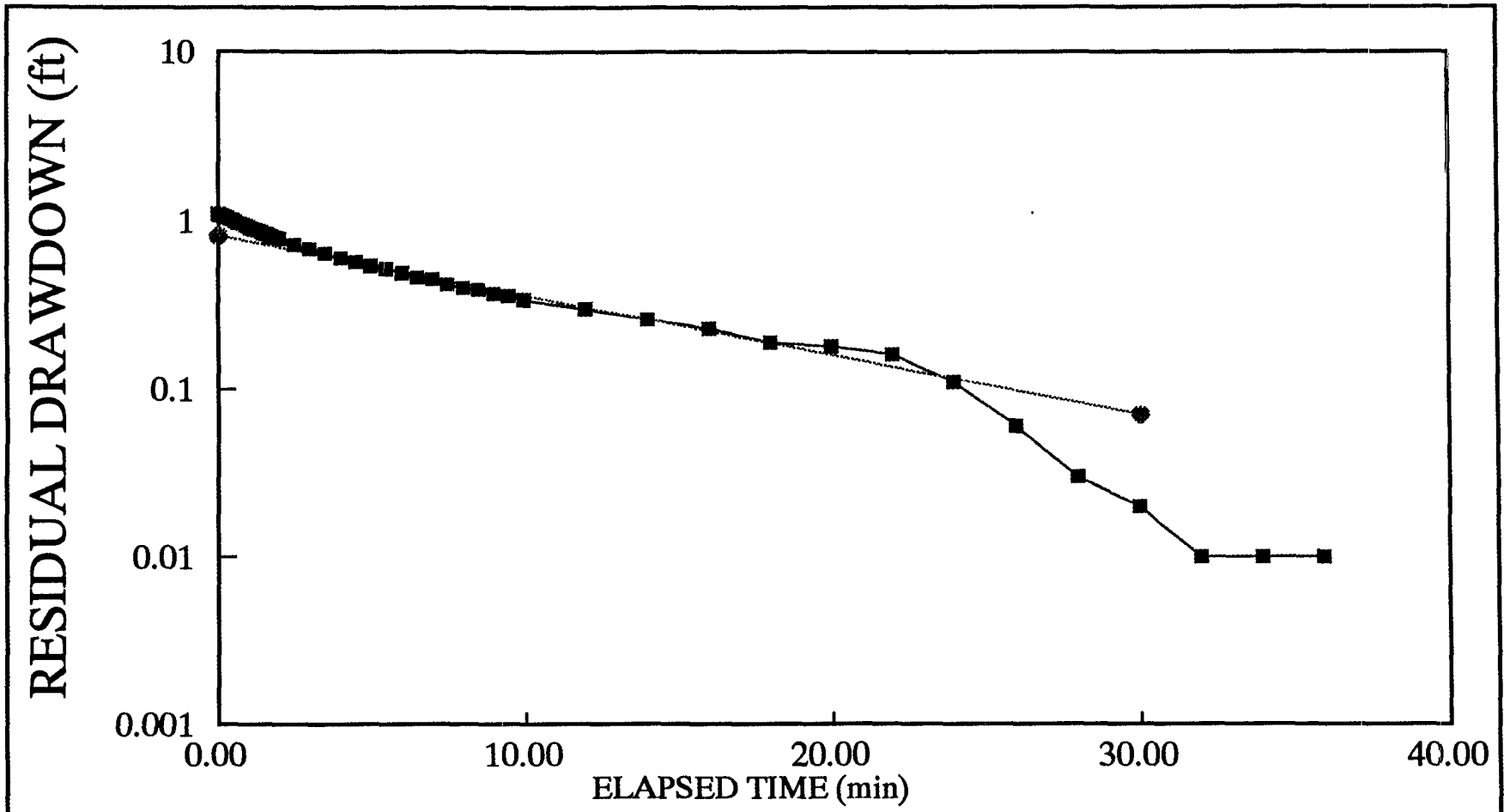

LEGEND

Measured Drawdown

Regression line

RESIDUAL DRAWDOWN CURVE
NS4-MW1T

NAVAL STATION
SAN DIEGO, CALIFORNIA

INTERNATIONAL TECHNOLOGY CORPORATION

ns4mw1t.drw/409767/1-24-92/js

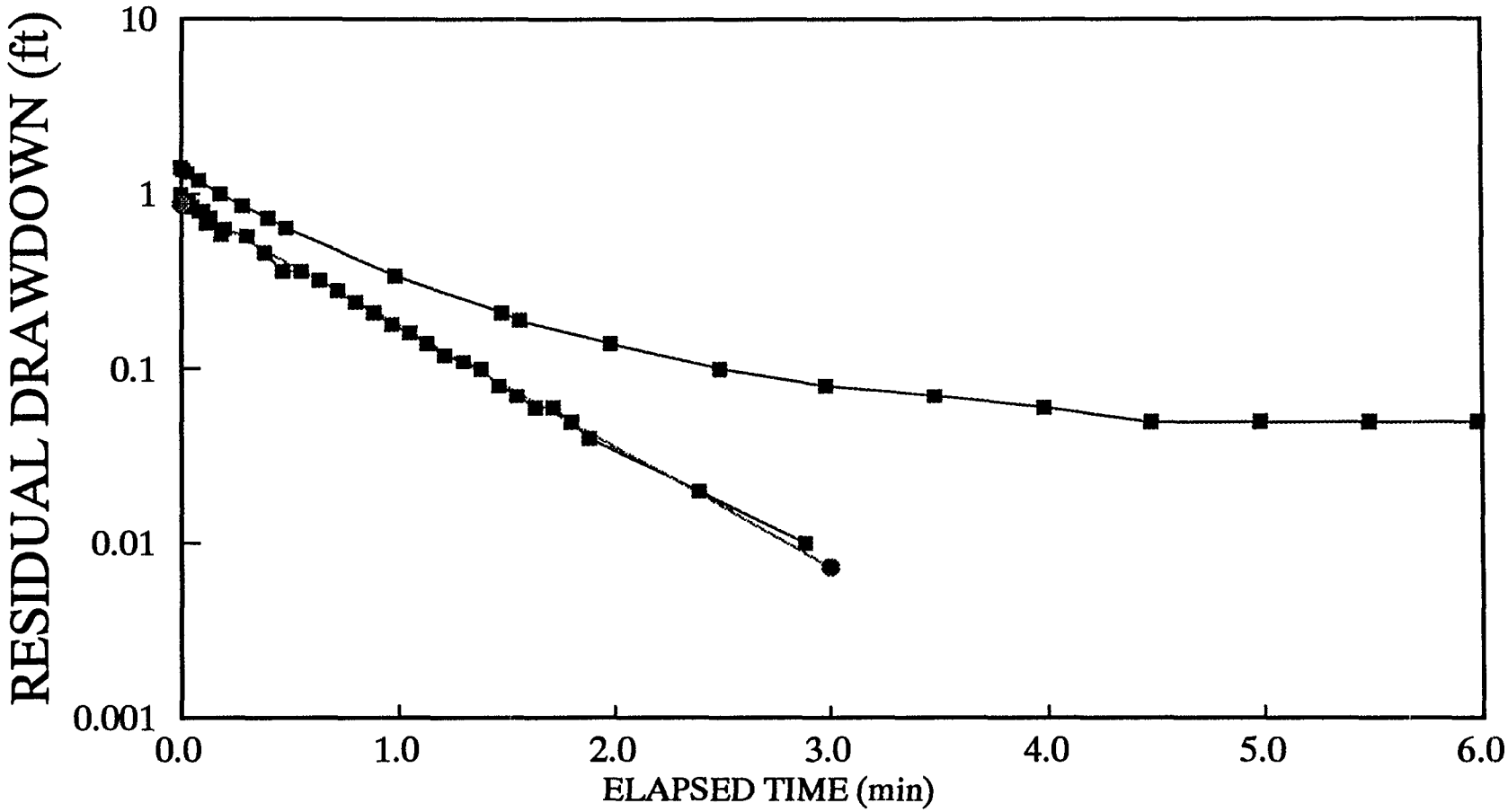

RESIDUAL DRAWDOWN CURVE
NS4-MW2

NAVAL STATION
SAN DIEGO, CALIFORNIA

LEGEND

Measured Drawdown

Regression line

INTERNATIONAL TECHNOLOGY CORPORATION

ns4mw2.drw/409767/1-24-92/js

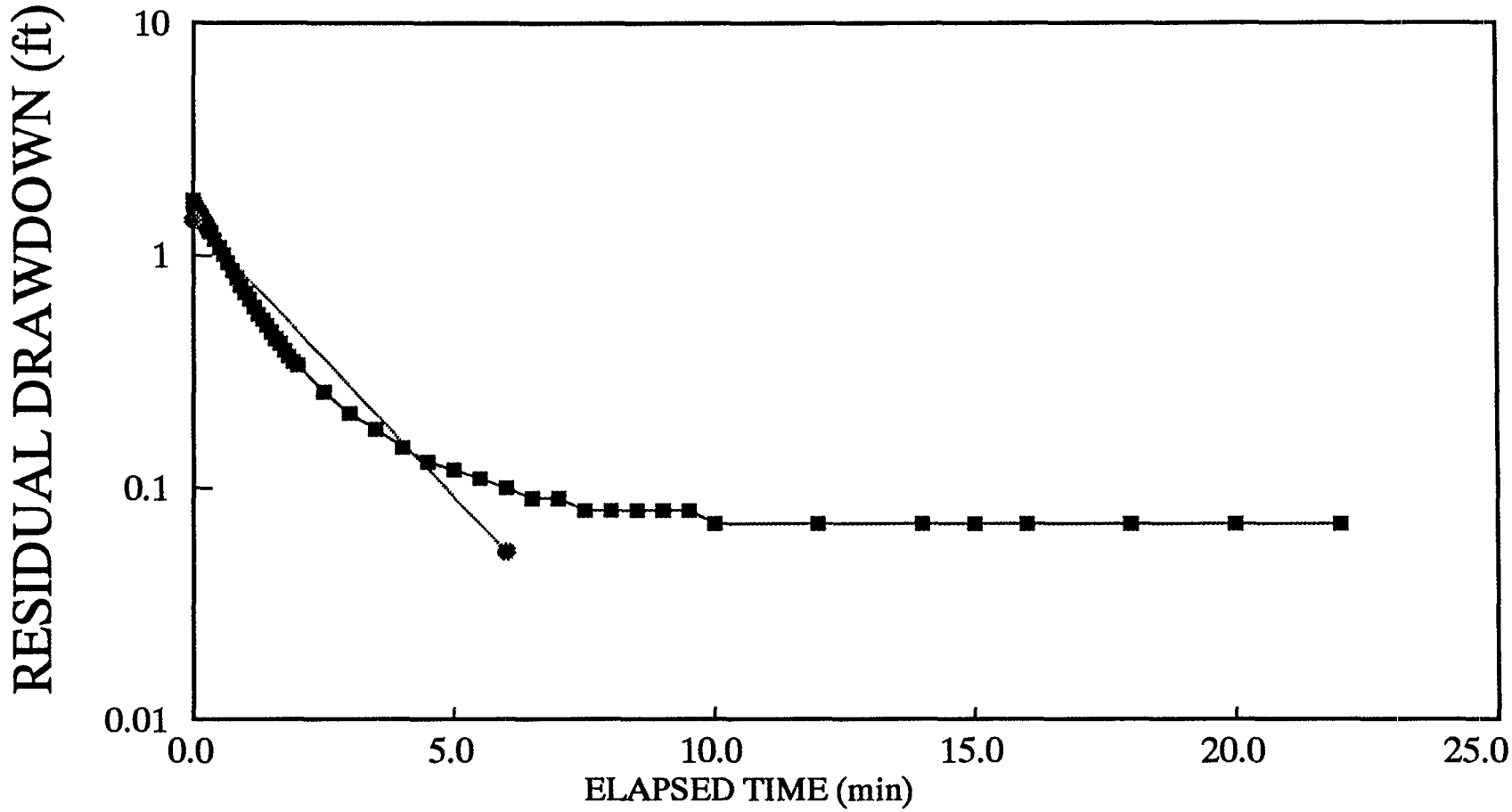

RESIDUAL DRAWDOWN CURVE
NS4-MW3

NAVAL STATION
SAN DIEGO, CALIFORNIA

LEGEND

Measured Drawdown

Regression line

INTERNATIONAL TECHNOLOGY CORPORATION

ns4mw3.drw/409767/1-24-92/js

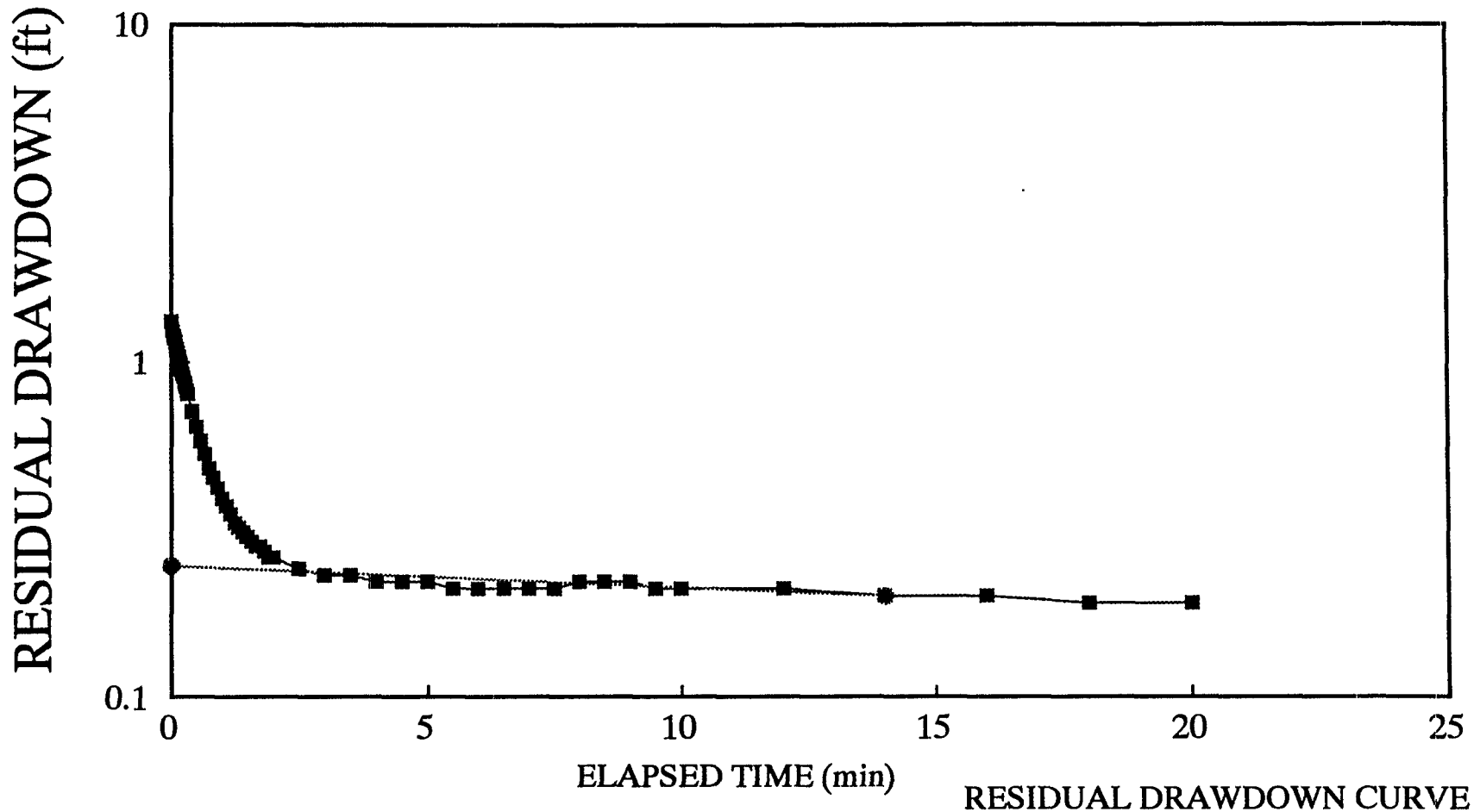

RESIDUAL DRAWDOWN CURVE
NS7-MW1

NAVAL STATION
SAN DIEGO, CALIFORNIA

LEGEND

Measured Drawdown

Regression line

INTERNATIONAL TECHNOLOGY CORPORATION

ns7mw1.drw/409767/1-24-92/js

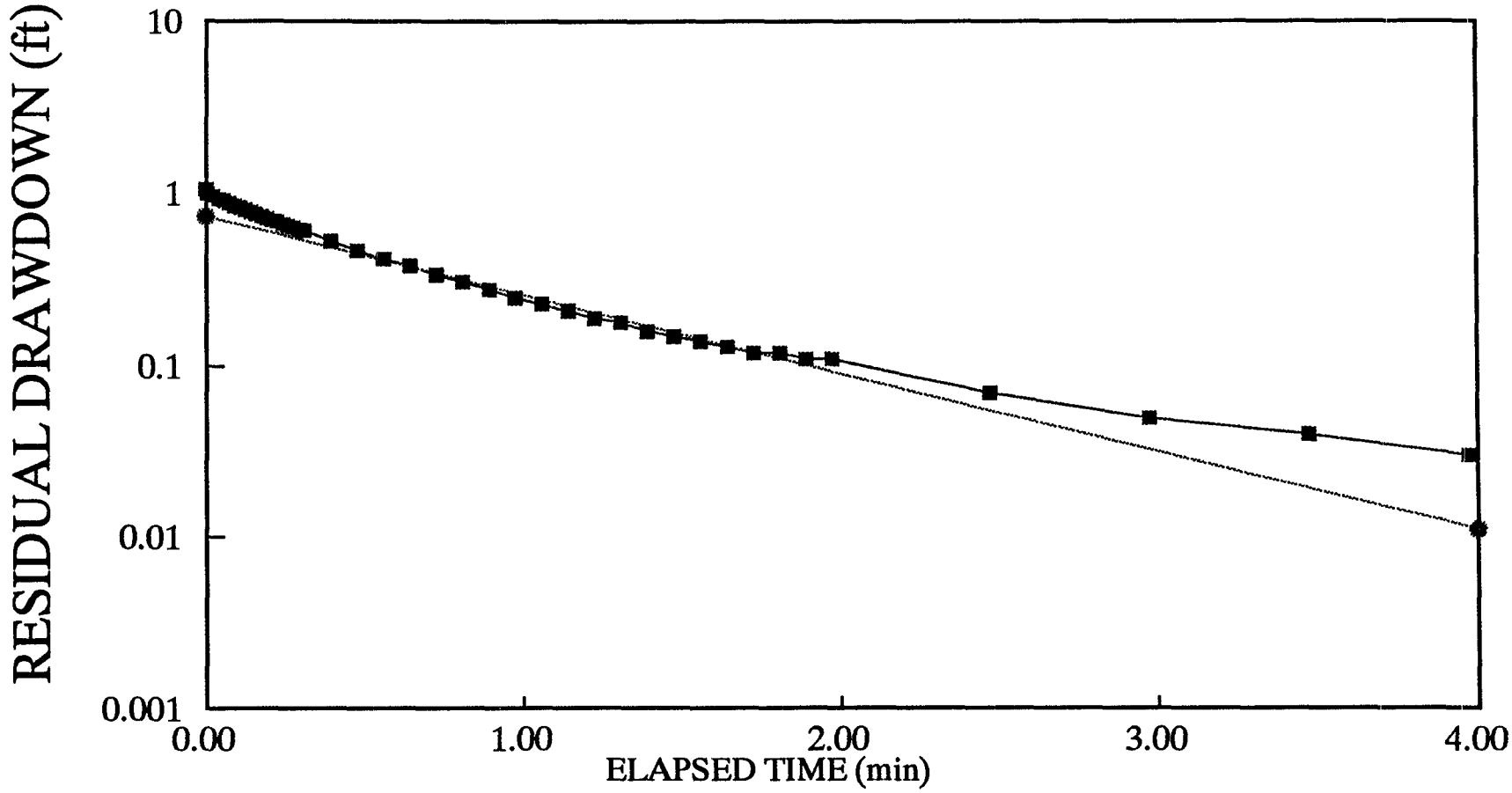

RESIDUAL DRAWDOWN CURVE
NS7-MW2

NAVAL STATION
SAN DIEGO, CALIFORNIA

INTERNATIONAL TECHNOLOGY CORPORATION

LEGEND

Measured Drawdown

Regression line

ns7mw2.drw/409767/1-24-92/js

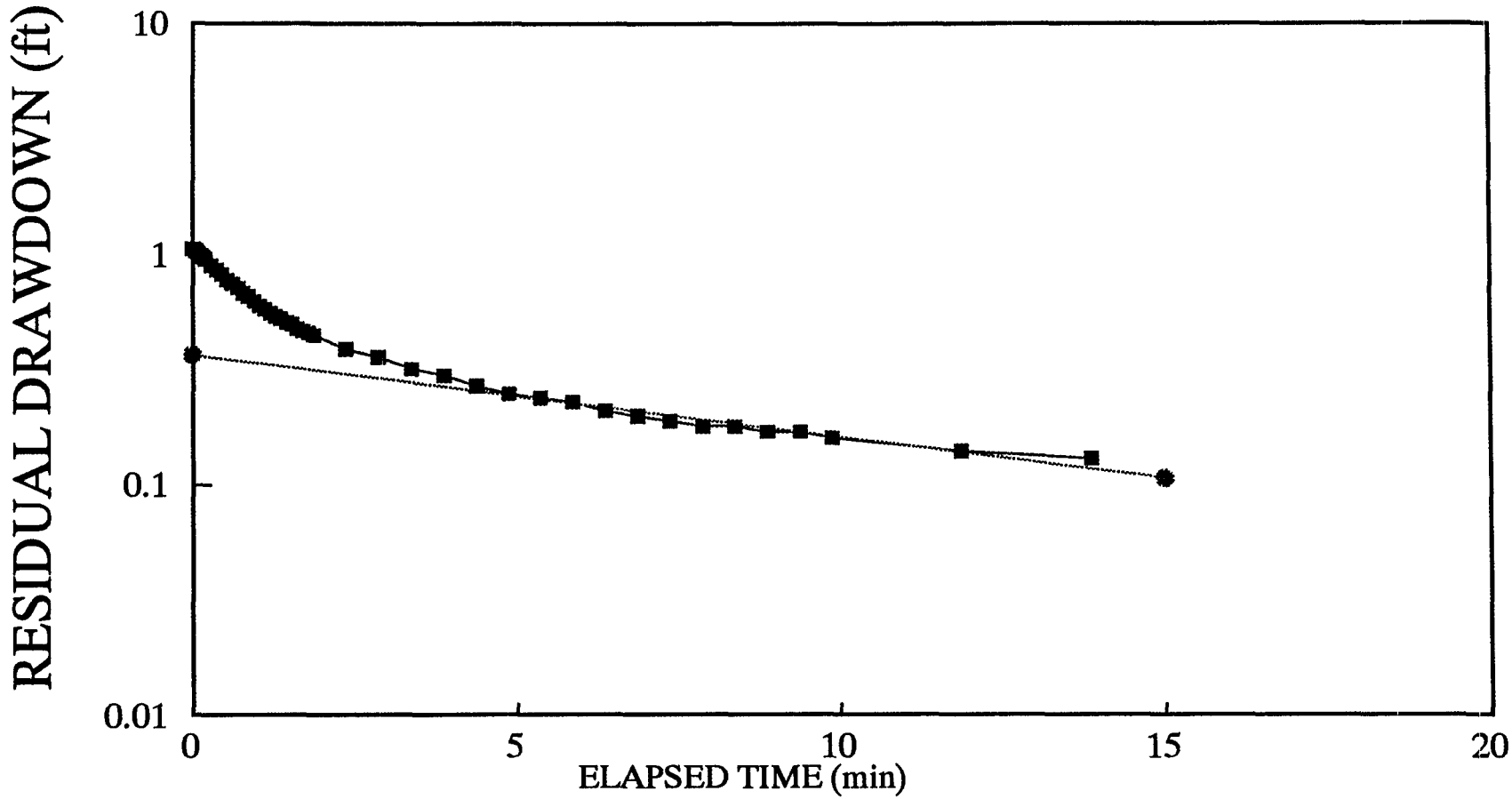

RESIDUAL DRAWDOWN CURVE
NS7-MW3

NAVAL STATION
SAN DIEGO, CALIFORNIA

INTERNATIONAL TECHNOLOGY CORPORATION

LEGEND

Measured Drawdown

Regression line

ns7mw3.drw/409767/1-24-92/js

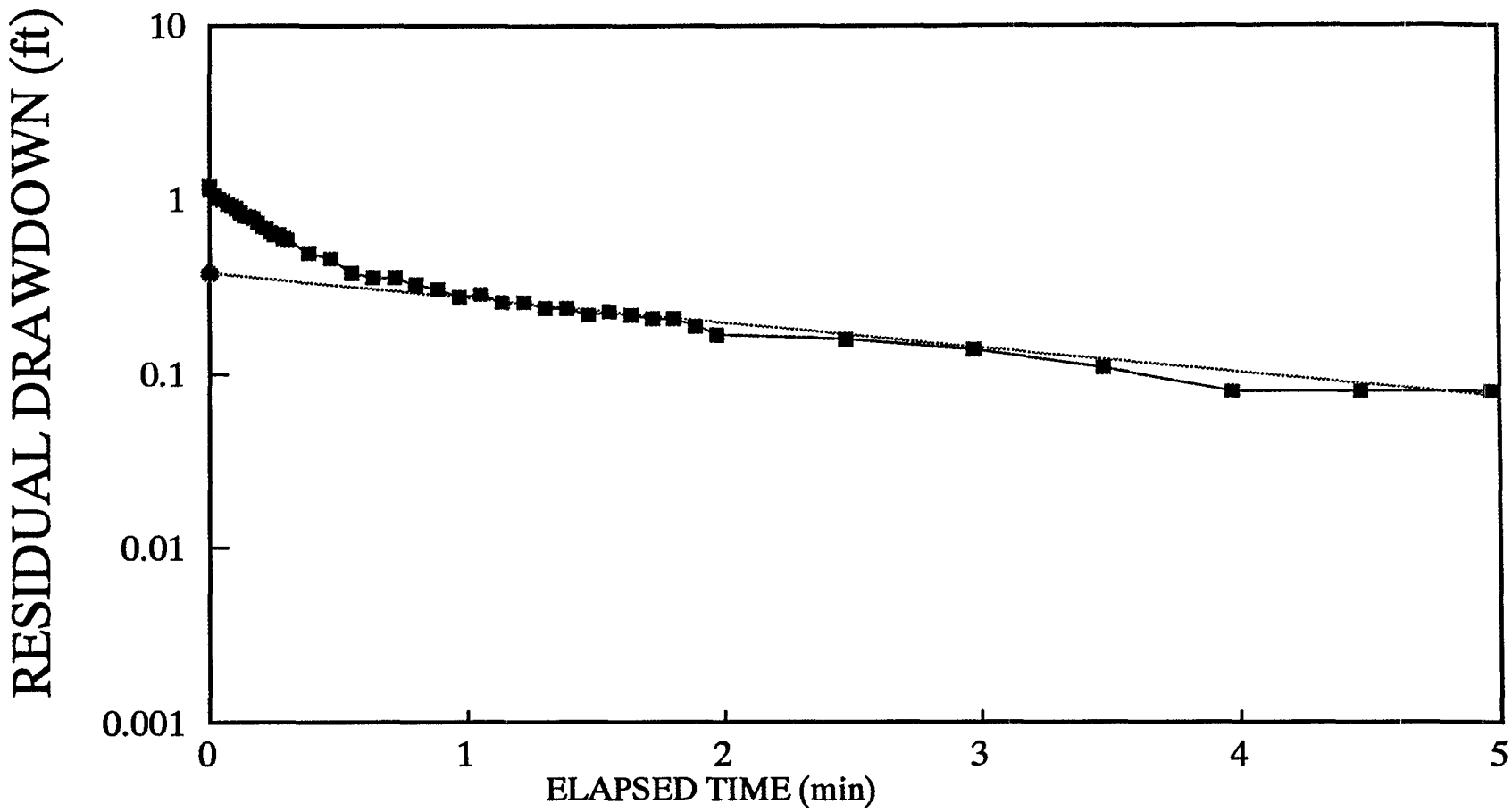

RESIDUAL DRAWDOWN CURVE
NS8-MW2

NAVAL STATION
SAN DIEGO, CALIFORNIA

LEGEND

Measured Drawdown

Regression line

INTERNATIONAL TECHNOLOGY CORPORATION

ns8mw2.drw/409767/1-24-92/js

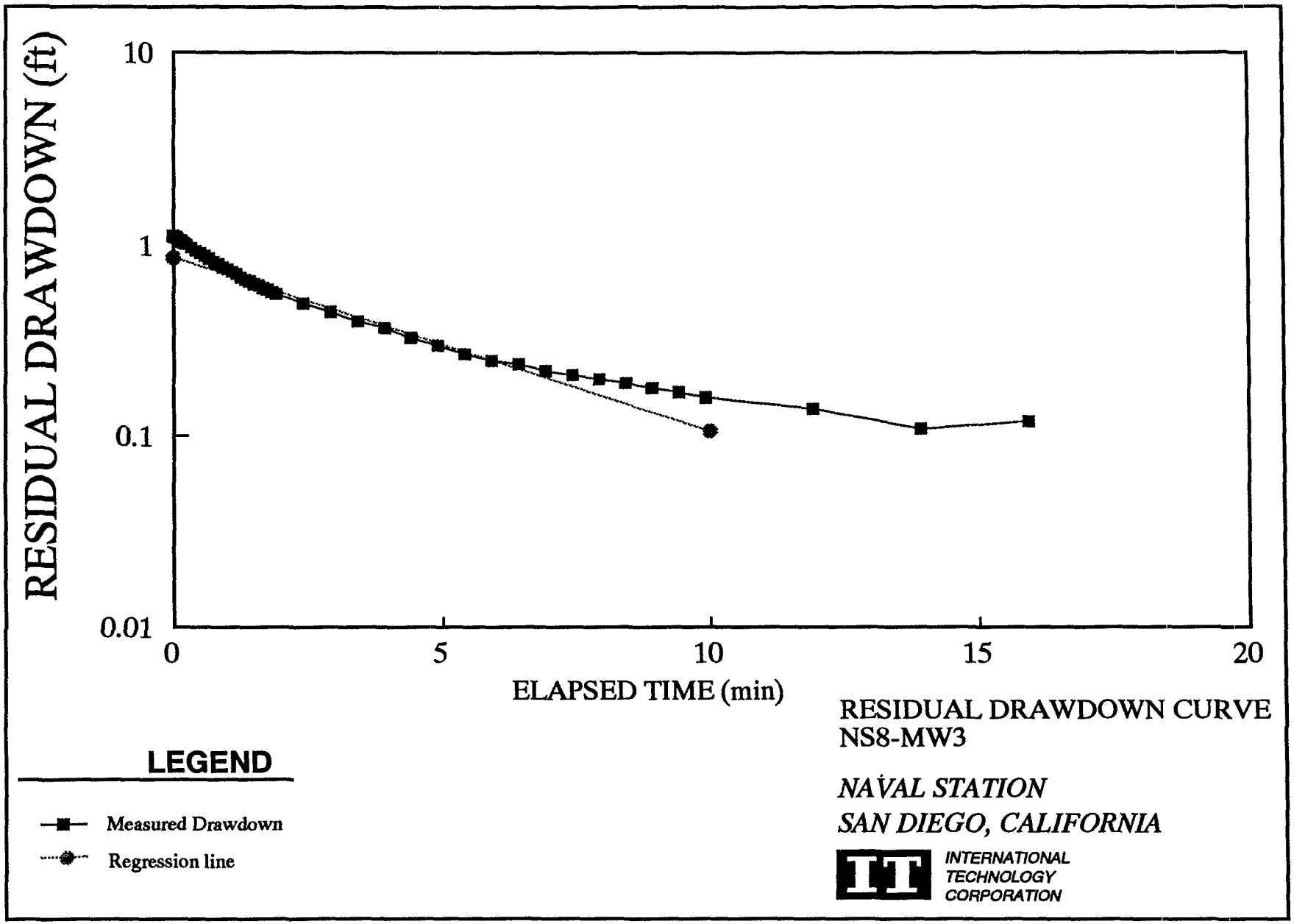

ns8mw3.drw/409767/1-24-92/js

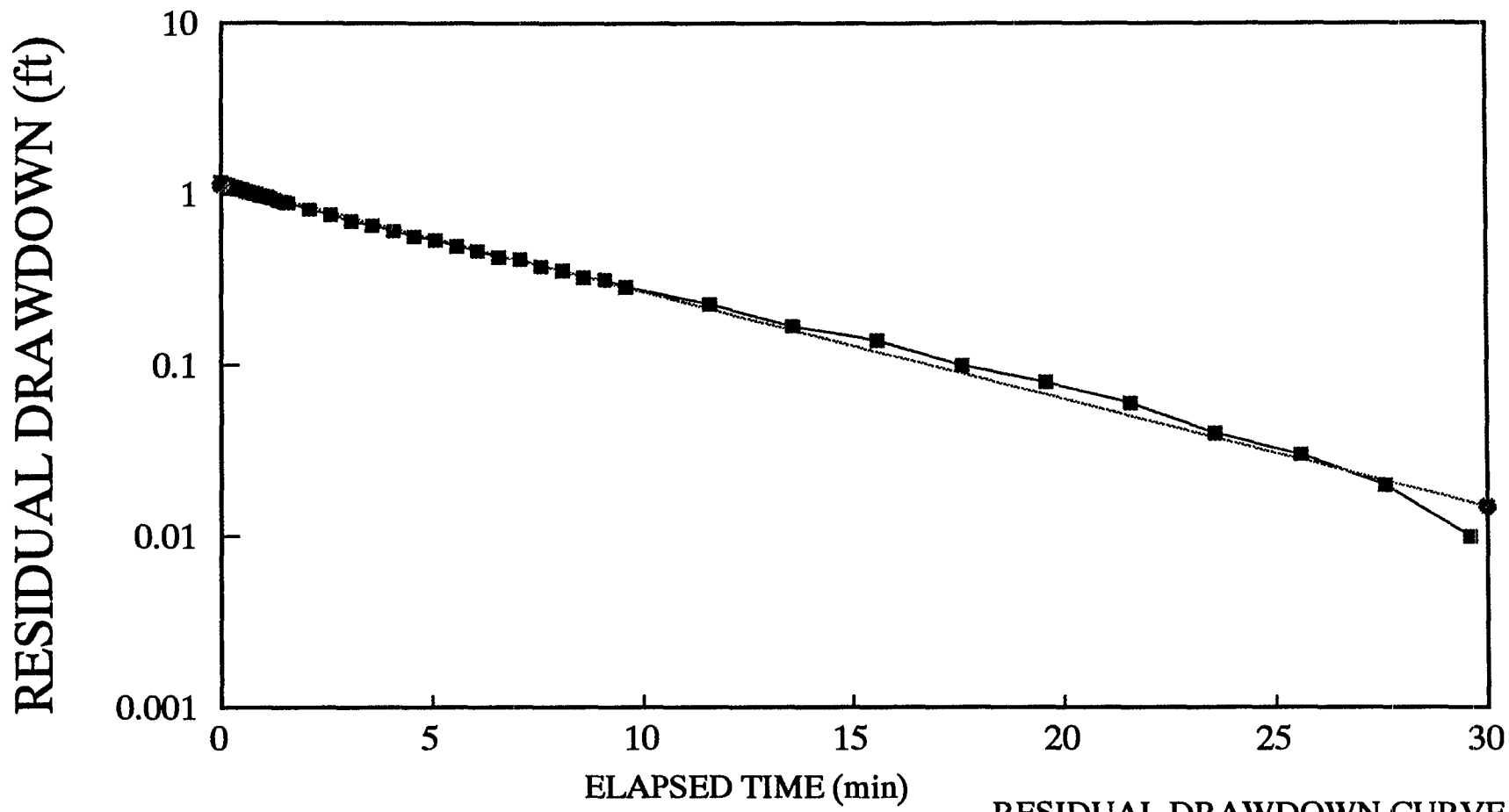

RESIDUAL DRAWDOWN CURVE
NS8-MW4

NAVAL STATION
SAN DIEGO, CALIFORNIA

LEGEND

Measured Drawdown

Regression line

INTERNATIONAL TECHNOLOGY CORPORATION

ns8mw4.drw/409767/1-24-92/js

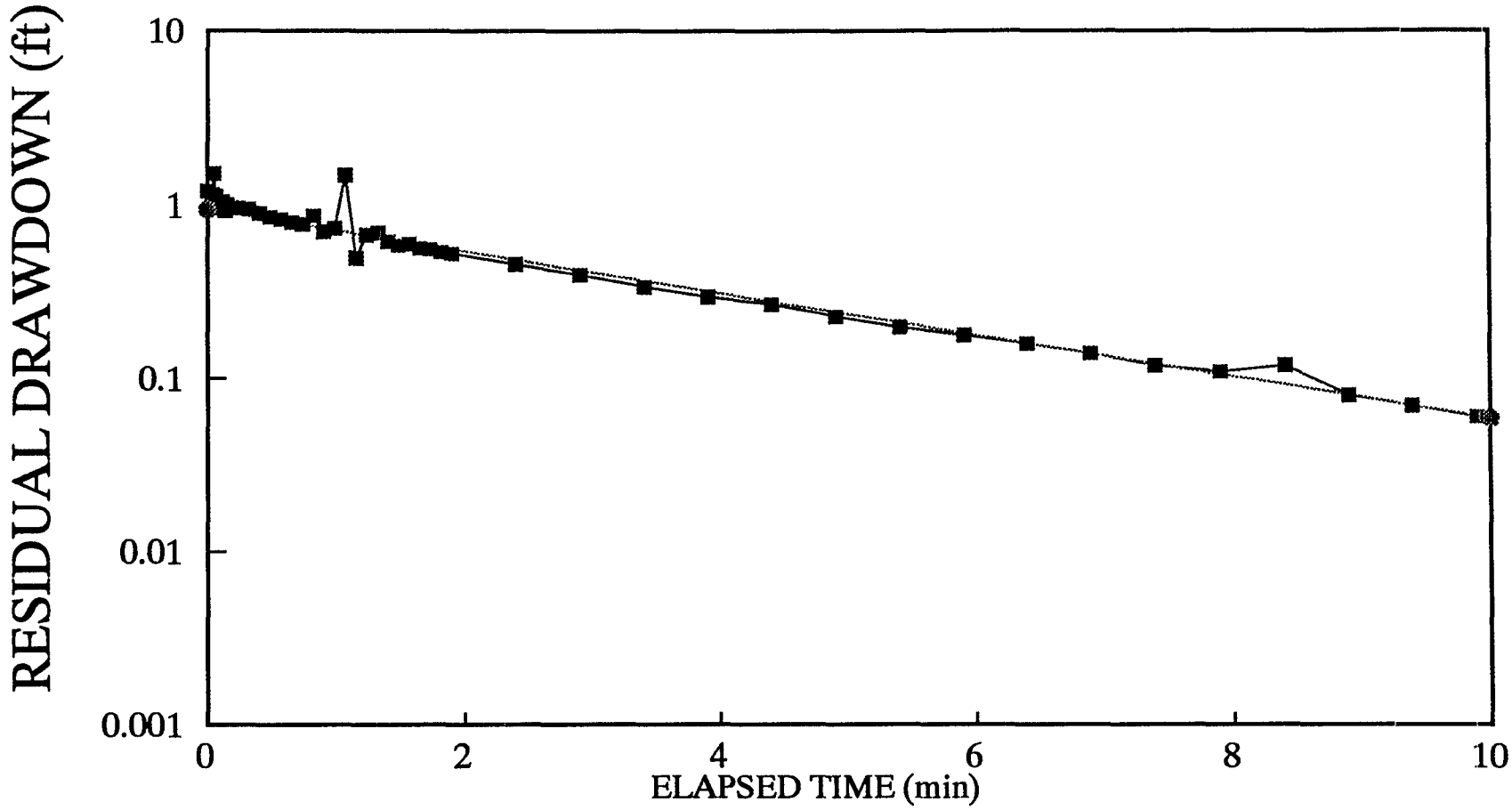

RESIDUAL DRAWDOWN CURVE
NS8-MW5

NAVAL STATION
SAN DIEGO, CALIFORNIA

LEGEND

Measured Drawdown

Regression line

INTERNATIONAL TECHNOLOGY CORPORATION

ns8mw5.drw/409767/1-24-92/js

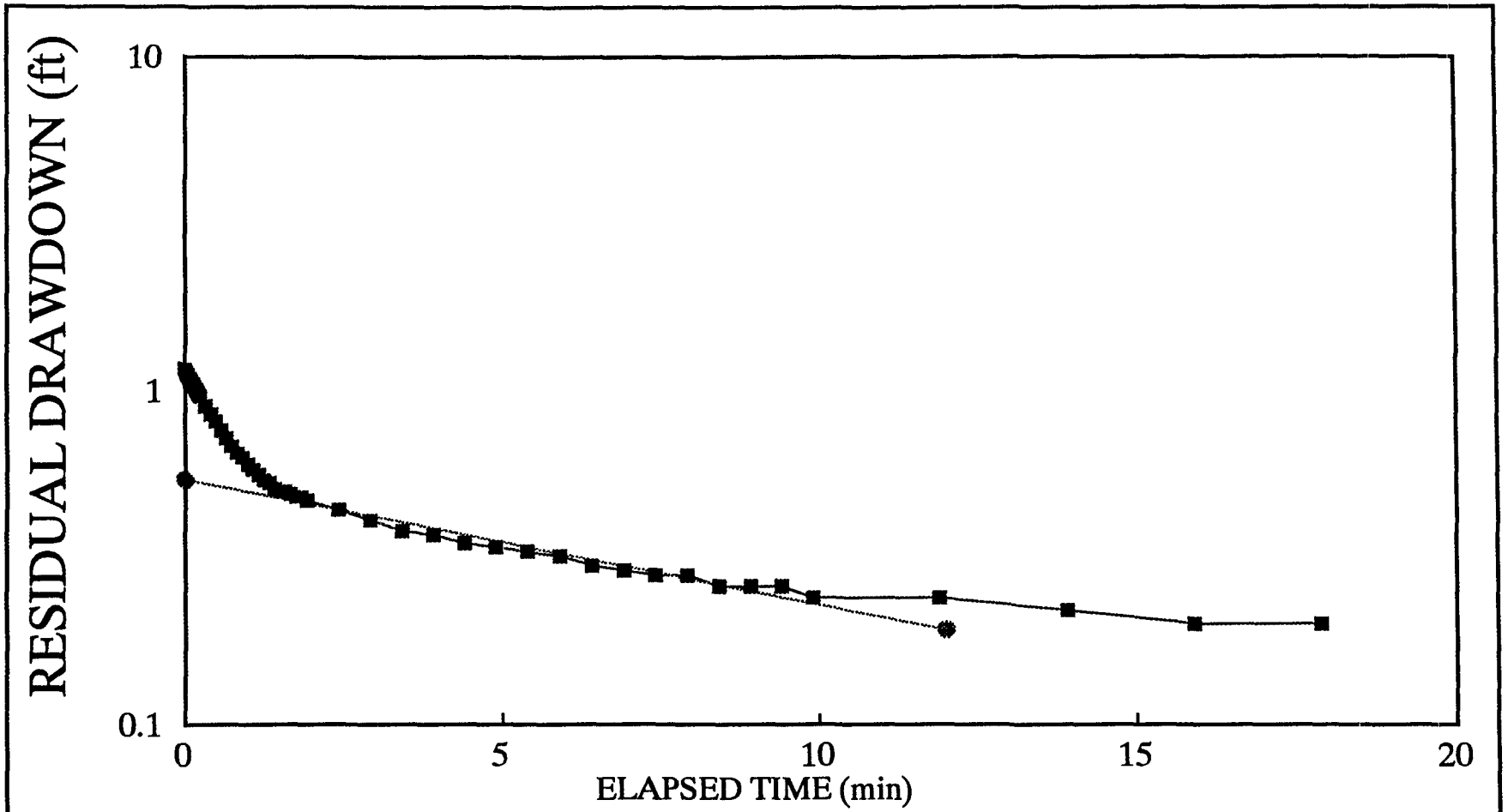

RESIDUAL DRAWDOWN CURVE
NS8-MW7

NAVAL STATION
SAN DIEGO, CALIFORNIA

LEGEND

Measured Drawdown

Regression line

INTERNATIONAL TECHNOLOGY CORPORATION

ns8mw7.drw/409767/1-24-92/js

APPENDIX F

SOILS

NAVSTA-SAN DIEGO
SITE 2 SOILS

		SAMPLE NUMBER:	NS2-BH01-S01-5		NS2-BH01-S02-15		NS2-BH02-S01-10		NS2-BH02-S02-15		NS2-BH02-S03-15 FD	
		SAMPLING DATE:	02/04/91		02/04/91		02/04/91		02/04/91		02/04/91	
		BORING:	BH01		BH01		BH02		BH02		BH02	
		SITE:	NS2		NS2		NS2		NS2		NS2	
		DEPTH:	5		15		10		15		15 FD	
COMPOUND NAME	UNITS	TEST CODE	RESULT	QUALIFIER	RESULT	QUALIFIER	RESULT	QUALIFIER	RESULT	QUALIFIER	RESULT	QUALIFIER
1,2,4-TRICHLOROBENZENE	UG/KG	BNA	490	U	1600	U	1400	U	12000	U	7800	U
1,2-DICHLOROBENZENE	UG/KG	BNA	490	U	1600	U	1400	U	12000	U	870	J
1,3-DICHLOROBENZENE	UG/KG	BNA	490	U	1600	U	1400	U	12000	U	7800	U
1,4-DICHLOROBENZENE	UG/KG	BNA	490	U	1600	U	1400	U	12000	U	7800	U
2,4,5-TRICHLOROPHENOL	UG/KG	BNA	2400	U	7600	U	6700	U	57000	UR	38000	UR
2,4,6-TRICHLOROPHENOL	UG/KG	BNA	490	U	1600	U	1400	U	12000	UR	7800	UR
2,4-DICHLOROPHENOL	UG/KG	BNA	490	U	1600	U	1400	U	12000	UR	7800	UR
2,4-DIMETHYLPHENOL	UG/KG	BNA	490	U	1600	U	1400	U	12000	UR	7800	UR
2,4-DINITROPHENOL	UG/KG	BNA	2400	U	7600	U	6700	U	57000	UR	38000	UR
2,4-DINITROTOLUENE	UG/KG	BNA	490	U	1600	U	1400	U	12000	U	7800	U
2,6-DINITROTOLUENE	UG/KG	BNA	490	U	1600	U	1400	U	12000	U	7800	U
2-CHLORONAPHTHALENE	UG/KG	BNA	490	U	1600	U	1400	U	12000	U	7800	U
2-CHLOROPHENOL	UG/KG	BNA	490	U	1600	U	1400	U	12000	UR	7800	UR
2-METHYLNAPHTHALENE	UG/KG	BNA	490	U	3100		6600		18000		15000	
2-METHYLPHENOL	UG/KG	BNA	490	U	1600	U	1400	U	12000	UR	7800	UR
2-NITROANILINE	UG/KG	BNA	2400	U	7600	U	6700	U	57000	U	38000	U
2-NITROPHENOL	UG/KG	BNA	490	U	1600	U	1400	U	12000	UR	7800	UR
3,3'-DICHLOROBENZIDINE	UG/KG	BNA	970	U	3100	U	2800	U	24000	U	16000	U
3-NITROANILINE	UG/KG	BNA	2400	U	7600	U	6700	U	57000	U	38000	U
4,6-DINITRO-2-METHYLPHENOL	UG/KG	BNA	2400	U	7600	U	6700	U	57000	UR	38000	UR
4-BROMOPHENYL-PHENYLETHER	UG/KG	BNA	490	U	1600	U	1400	U	12000	U	7800	U
4-CHLORO-3-METHYLPHENOL	UG/KG	BNA	490	U	1600	U	1400	U	12000	UR	7800	UR
4-CHLOROANILINE	UG/KG	BNA	490	U	1600	U	1400	U	12000	U	7800	U
4-CHLOROPHENYL-PHENYLETHER	UG/KG	BNA	490	U	1600	U	1400	U	12000	U	7800	U
4-METHYLPHENOL	UG/KG	BNA	490	U	1600	U	1400	U	12000	UR	7800	UR
4-NITROANILINE	UG/KG	BNA	2400	U	7600	U	6700	U	57000	U	38000	U
4-NITROPHENOL	UG/KG	BNA	2400	U	7600	U	6700	U	57000	UR	38000	UR
ACENAPHTHENE	UG/KG	BNA	490	U	1600	U	1400	U	12000	U	7800	U
ACENAPHTHYLENE	UG/KG	BNA	490	U	1600	U	1400	U	12000	U	7800	U
ANTHRACENE	UG/KG	BNA	490	U	1900		1700		12000	U	7800	U
BENZO(A)ANTHRACENE	UG/KG	BNA	490	U	1600	U	1400	U	12000	U	7800	U
BENZO(A)PYRENE	UG/KG	BNA	490	U	1600	U	1400	U	12000	U	7800	U
BENZO(B)FLUORANTHENE	UG/KG	BNA	490	U	1600	U	1400	U	12000	U	7800	U
BENZO(G,H,I)PERYLENE	UG/KG	BNA	490	U	1600	U	1400	U	12000	U	7800	U
BENZO(K)FLUORANTHENE	UG/KG	BNA	490	U	1600	U	1400	U	12000	U	7800	U
BENZOIC ACID	UG/KG	BNA	2400	U	7600	U	6700	U	57000	UR	38000	UR
BENZYL ALCOHOL	UG/KG	BNA	490	U	1600	U	1400	U	12000	U	7800	U
BIS(2-CHLOROETHOXY)METHANE	UG/KG	BNA	490	U	1600	U	1400	U	12000	U	7800	U
BIS(2-CHLOROETHYL)ETHER	UG/KG	BNA	490	U	1600	U	1400	U	12000	U	7800	U
BIS(2-CHLOROISOPROPYL)ETHER	UG/KG	BNA	490	U	1600	U	1400	U	12000	U	7800	U
BIS(2-ETHYLHEXYL)PHTHALATE	UG/KG	BNA	490	U	1600	U	1400	U	12000	U	7800	U
BUTYLBENZYLPHTHALATE	UG/KG	BNA	490	U	1600	U	1400	U	12000	U	7800	U
CHRYSENE	UG/KG	BNA	490	U	1600	U	1400	U	12000	U	7800	U
DI-N-BUTYLPHTHALATE	UG/KG	BNA	490	U	1600	U	1400	U	12000	U	7800	U
DI-N-OCTYLPHTHALATE	UG/KG	BNA	490	U	1600	U	1400	U	12000	U	7800	U
DIBENZ(A,H)ANTHRACENE	UG/KG	BNA	490	U	1600	U	1400	U	12000	U	7800	U
DIBENZOFURAN	UG/KG	BNA	490	U	1600	U	1400	U	12000	U	7800	U
DIETHYLPHTHALATE	UG/KG	BNA	490	U	1600	U	1400	U	12000	U	7800	U
DIMETHYLPHTHALATE	UG/KG	BNA	490	U	1600	U	1400	U	12000	U	7800	U
FLUORANTHENE	UG/KG	BNA	490	U	1600	U	1400	U	12000	U	1000	J
FLUORENE	UG/KG	BNA	490	U	1600	U	1400	U	2800	J	2400	J

NAVSTA-SAN DIEGO
SITE 2 SOILS

		SAMPLE NUMBER:	NS2-BH01-S01-5		NS2-BH01-S02-15		NS2-BH02-S01-10		NS2-BH02-S02-15		NS2-BH02-S03-15 FD	
		SAMPLING DATE:	02/04/91		02/04/91		02/04/91		02/04/91		02/04/91	
		BORING:	BH01		BH01		BH02		BH02		BH02	
		SITE:	NS2		NS2		NS2		NS2		NS2	
		DEPTH:	5		15		10		15		15 FD	
COMPOUND NAME	UNITS	TEST CODE	RESULT	QUALIFIER	RESULT	QUALIFIER	RESULT	QUALIFIER	RESULT	QUALIFIER	RESULT	QUALIFIER
HEXACHLOROBENZENE	UG/KG	BNA	490	U	1600	U	1400	U	12000	U	7800	U
HEXACHLOROBUTADIENE	UG/KG	BNA	490	U	1600	U	1400	U	12000	U	7800	U
HEXACHLOROCYCLOPENTADIENE	UG/KG	BNA	490	U	1600	U	1400	U	12000	U	7800	U
HEXACHLOROETHANE	UG/KG	BNA	490	U	1600	U	1400	U	12000	U	7800	U
INDENO(1,2,3-C,D)PYRENE	UG/KG	BNA	490	U	1600	U	1400	U	12000	U	7800	U
ISOPHORONE	UG/KG	BNA	490	U	1600	U	1400	U	12000	U	7800	U
N-NITROSO-DI-N-PROPYLAMINE	UG/KG	BNA	490	U	1600	U	1400	U	12000	U	7800	U
N-NITROSODIPHENYLAMINE (1)	UG/KG	BNA	490	U	1600	U	1400	U	12000	U	7800	U
NAPHTHALENE	UG/KG	BNA	490	U	1000	J	1900		6100	J	5700	J
NITROBENZENE	UG/KG	BNA	490	U	1600	U	1400	U	12000	U	7800	U
PENTACHLOROPHENOL	UG/KG	BNA	2400	U	7600	U	6700	U	57000	UR	38000	UR
PHENANTHRENE	UG/KG	BNA	490	U	1800		1600		4600	J	3600	J
PHENOL	UG/KG	BNA	490	U	1600	U	1400	U	12000	UR	7800	UR
PYRENE	UG/KG	BNA	490	U	1600	U	1400	U	12000	U	1000	J
ANTIMONY	MG/KG	CAC METALS	5.0	U	4.3	U	4.0	U	11.8	BJ	20.6	J
ARSENIC	MG/KG	CAC METALS	4.9		0.51	B	1.3	B	2.7	J	6.0	J
BARIUM	MG/KG	CAC METALS	36.6	B	119		30.2	B	149		258	
BERYLLIUM	MG/KG	CAC METALS	0.73	B	2.2		0.58	B	1.2		4.0	
CADMIUM	MG/KG	CAC METALS	1.1	U	0.90	U	0.83	U	0.92	U	0.99	B
CHROMIUM	MG/KG	CAC METALS	7.9		29.5		5.4		16.6		17.8	
COBALT	MG/KG	CAC METALS	4.0	B	13.1		3.6	B	6.5	B	11.4	
COPPER	MG/KG	CAC METALS	63.2		94.2		39.6		2440	J	524	J
LEAD	MG/KG	CAC METALS	207		2.0		13.2		462	J	403	J
MERCURY	MG/KG	CAC METALS	0.20		0.06	U	0.05	U	0.09	J	0.46	J
MOLYBDENUM	MG/KG	CAC METALS	1.9	U	1.6	U	1.5	U	1.6	U	3.2	B
NICKEL	MG/KG	CAC METALS	2.4	U	12.5		3.2	B	20.6		35.4	
SELENIUM	MG/KG	CAC METALS	0.28	U	0.23	U	0.19	U	0.26	B	0.23	U
SILVER	MG/KG	CAC METALS	0.81	U	1.4	B	0.63	U	0.69	U	2.4	U
THALLIUM	MG/KG	CAC METALS	0.92	B	0.46	U	0.42	B	0.44	U	0.57	B
VANADIUM	MG/KG	CAC METALS	28.2		83.3		18.0		50.1		70.9	
ZINC	MG/KG	CAC METALS	17.6		266		37.6		936	J	814	J
ANTIMONY	UG/KG	CAC METALS										
ARSENIC	UG/KG	CAC METALS										
BARIUM	UG/KG	CAC METALS										
BERYLLIUM	UG/KG	CAC METALS										
CADMIUM	UG/KG	CAC METALS										
CHROMIUM	UG/KG	CAC METALS										
COBALT	UG/KG	CAC METALS										
COPPER	UG/KG	CAC METALS										
LEAD	UG/KG	CAC METALS										
MERCURY	UG/KG	CAC METALS										
MOLYBDENUM	UG/KG	CAC METALS										
NICKEL	UG/KG	CAC METALS										
SELENIUM	UG/KG	CAC METALS										
SILVER	UG/KG	CAC METALS										
THALLIUM	UG/KG	CAC METALS										
VANADIUM	UG/KG	CAC METALS										
ZINC	UG/KG	CAC METALS										
CAC WET EXTRACTION	DATE	CAC WET EX										
COPPER	MG/L	CAC WET EX							8.42		6.42	
LEAD	MG/L	CAC WET EX	0.133						0.309		0.319	

NAVSTA-SAN DIEGO
SITE 2 SOILS

		SAMPLE NUMBER:	NS2-BH01-S01-5		NS2-BH01-S02-15		NS2-BH02-S01-10		NS2-BH02-S02-15		NS2-BH02-S03-15 FD	
		SAMPLING DATE:	02/04/91		02/04/91		02/04/91		02/04/91		02/04/91	
		BORING:	BH01		BH01		BH02		BH02		BH02	
		SITE:	NS2		NS2		NS2		NS2		NS2	
		DEPTH:	5		15		10		15		15 FD	
COMPOUND NAME	UNITS	TEST CODE	RESULT	QUALIFIER	RESULT	QUALIFIER	RESULT	QUALIFIER	RESULT	QUALIFIER	RESULT	QUALIFIER
MERCURY	MG/L	CAC WET EX										
TOTAL CYANIDE	MG/KG	CN	1	U	1	U	1	U	1	U	1	U
TOTAL CYANIDE	MG/L	CN										
4,4'-DDD	UG/KG	PEST / PCB	24	U	19	U	17	U	19	UJ	19	UJ
4,4'-DDE	UG/KG	PEST / PCB	24	U	19	U	17	U	19	UJ	19	UJ
4,4'-DDT	UG/KG	PEST / PCB	24	U	19	U	17	U	19	UJ	19	UJ
ALDRIN	UG/KG	PEST / PCB	12	U	9.5	U	8.4	U	9.5	UJ	9.4	UJ
ALPHA CHLORDANE	UG/KG	PEST / PCB										
ALPHA-BHC	UG/KG	PEST / PCB	12	U	9.5	U	8.4	U	9.5	UJ	9.4	UJ
ALPHA-CHLORDANE	UG/KG	PEST / PCB	120	U	95	U	84	U	95	UJ	94	UJ
BETA-BHC	UG/KG	PEST / PCB	12	U	9.5	U	8.4	U	9.5	UJ	9.4	UJ
CHLORDANE	UG/KG	PEST / PCB										
DELTA-BHC	UG/KG	PEST / PCB	12	U	9.5	U	8.4	U	9.5	UJ	9.4	UJ
DIELDRIN	UG/KG	PEST / PCB	24	U	19	U	17	U	19	UJ	19	UJ
ENDOSULFAN I	UG/KG	PEST / PCB	12	U	9.5	U	8.4	U	9.5	UJ	9.4	UJ
ENDOSULFAN II	UG/KG	PEST / PCB	24	U	19	U	17	U	19	UJ	19	UJ
ENDOSULFAN SULFATE	UG/KG	PEST / PCB	24	U	19	U	17	U	19	UJ	19	UJ
ENDRIN	UG/KG	PEST / PCB	24	U	19	U	17	U	19	UJ	19	UJ
ENDRIN KETONE	UG/KG	PEST / PCB	24	U	19	U	17	U	19	UJ	19	UJ
GAMMA CHLORDANE	UG/KG	PEST / PCB										
GAMMA-BHC (LINDANE)	UG/KG	PEST / PCB	12	U	9.5	U	8.4	U	9.5	UJ	9.4	UJ
GAMMA-CHLORDANE	UG/KG	PEST / PCB	120	U	95	U	84	U	95	UJ	94	UJ
HEPTACHLOR	UG/KG	PEST / PCB	12	U	9.5	U	8.4	U	9.5	UJ	9.4	UJ
HEPTACHLOR EPOXIDE	UG/KG	PEST / PCB	12	U	9.5	U	8.4	U	9.5	UJ	9.4	UJ
METHOXYCHLOR	UG/KG	PEST / PCB	120	U	95	U	84	U	95	UJ	94	UJ
PCB-1016	UG/KG	PEST / PCB	120	U	95	U	84	U	95	UJ	94	UJ
PCB-1221	UG/KG	PEST / PCB	120	U	95	U	84	U	95	UJ	94	UJ
PCB-1232	UG/KG	PEST / PCB	120	U	95	U	84	U	95	UJ	94	UJ
PCB-1242	UG/KG	PEST / PCB	120	U	95	U	84	U	95	UJ	94	UJ
PCB-1248	UG/KG	PEST / PCB	120	U	95	U	84	U	95	UJ	94	UJ
PCB-1254	UG/KG	PEST / PCB	240	U	190	U	170	U	190	UJ	190	UJ
PCB-1260	UG/KG	PEST / PCB	240	U	190	U	170	U	408	J	340	J
TOXAPHENE	UG/KG	PEST / PCB	240	U	190	U	170	U	190	UJ	190	UJ
DIESEL	MG/KG	TPHC	10	U	5260	D	5920	D	9940	D	7500	D
HYDRAULIC OIL	MG/KG	TPHC	10	U			10	U	10	U	10	U
MOTOR OIL	MG/KG	TPHC	10	U	10	U	10	U	10	U	10	U
STODDARD	MG/KG	TPHC	10	U	10	U	10	U	10	U	10	U
DIESEL	UG/KG	TPHC										
HYDRAULIC OIL	UG/KG	TPHC			10	U						
MOTOR OIL	UG/KG	TPHC										
STODDARD	UG/KG	TPHC										
1,1,1-TRICHLOROETHANE	UG/KG	VOA	2	J	740	U	26	U	740	U	740	U
1,1,2,2-TETRACHLOROETHANE	UG/KG	VOA	7	U	740	U	26	U	740	U	740	U
1,1,2-TRICHLOROETHANE	UG/KG	VOA	7	U	740	U	26	U	740	U	740	U
1,1-DICHLOROETHANE	UG/KG	VOA	7	U	740	U	26	U	740	U	740	U
1,1-DICHLOROETHENE	UG/KG	VOA	7	U	740	U	26	U	740	U	740	U
1,2-DICHLOROETHANE	UG/KG	VOA	7	U	740	U	26	U	740	U	740	U
1,2-DICHLOROETHENE (TOTAL)	UG/KG	VOA	7	U	740	U	26	U	740	U	740	U
1,2-DICHLOROPROPANE	UG/KG	VOA	7	U	740	U	26	U	740	U	740	U
2-BUTANONE	UG/KG	VOA	15	U	310	J	53	U	1500	U	1500	U
2-HEXANONE	UG/KG	VOA	15	U	1500	U	53	U	1500	U	1500	U

NAVSTA-SAN DIEGO
SITE 2 SOILS

		SAMPLE NUMBER:	NS2-BH01-S01-5		NS2-BH01-S02-15		NS2-BH02-S01-10		NS2-BH02-S02-15		NS2-BH02-S03-15 FD	
		SAMPLING DATE:	02/04/91		02/04/91		02/04/91		02/04/91		02/04/91	
		BORING:	BH01		BH01		BH02		BH02		BH02	
		SITE:	NS2		NS2		NS2		NS2		NS2	
		DEPTH:	5		15		10		15		15 FD	
COMPOUND NAME	UNITS	TEST CODE	RESULT	QUALIFIER	RESULT	QUALIFIER	RESULT	QUALIFIER	RESULT	QUALIFIER	RESULT	QUALIFIER
4-METHYL-2-PENTANONE	UG/KG	VOA	15	U	1500	U	53	U	1500	U	1500	U
ACETONE	UG/KG	VOA	160	B	1800	U	150		1600	U	1500	U
BENZENE	UG/KG	VOA	7	U	740	U	26	U	740	U	740	U
BROMODICHLOROMETHANE	UG/KG	VOA	7	U	740	U	26	U	740	U	740	U
BROMOFORM	UG/KG	VOA	7	U	740	U	26	U	740	U	740	U
BROMOMETHANE	UG/KG	VOA	15	U	1500	U	53	U	1500	U	1500	U
CARBON DISULFIDE	UG/KG	VOA	7	U	740	U	26	U	740	U	740	U
CARBON TETRACHLORIDE	UG/KG	VOA	7	U	740	U	26	U	740	U	740	U
CHLOROBENZENE	UG/KG	VOA	7	U	740	U	26	U	740	U	740	U
CHLOROETHANE	UG/KG	VOA	15	U	1500	U	53	U	1500	U	1500	U
CHLOROFORM	UG/KG	VOA	7	U	740	U	26	U	740	U	740	U
CHLOROMETHANE	UG/KG	VOA	15	U	1500	U	53	U	1500	U	1500	U
CIS-1,3-DICHLOROPROPENE	UG/KG	VOA	7	U	740	U	26	U	740	U	740	U
DIBROMOCHLOROMETHANE	UG/KG	VOA	7	U	740	U	26	U	740	U	740	U
ETHYLBENZENE	UG/KG	VOA	7	U	330	J	14	J	740	U	740	U
METHYLENE CHLORIDE	UG/KG	VOA	14	U	760	U	29	U	1100	U	1900	U
STYRENE	UG/KG	VOA	7	U	740	U	26	U	740	U	740	U
TETRACHLOROETHENE	UG/KG	VOA	7	U	740	U	26	U	740	U	740	U
TOLUENE	UG/KG	VOA	160		1000		220		4400	J	800	
TRANS-1,3-DICHLOROPROPENE	UG/KG	VOA	7	U	740	U	26	U	740	U	740	U
TRICHLOROETHENE	UG/KG	VOA	7	U	740	U	26	U	740	U	740	U
VINYL ACETATE	UG/KG	VOA	15	U	1500	U	53	U	1500	U	1500	U
VINYL CHLORIDE	UG/KG	VOA	15	U	1500	U	53	U	1500	U	1500	U
XYLENES (TOTAL)	UG/KG	VOA	7	U	740	U	23	J	690	J	740	U

NAVSTA-SAN DIEGO
SITE 2 SOILS

		SAMPLE NUMBER:	NS2-BH03-S01-10		NS2-BH03-S02-15		NS2-BH04-S01-5		NS2-BH04-S02-10		NS2-BH05-S01-5	
		SAMPLING DATE:	02/04/91		02/04/91		02/05/91		02/05/91		02/05/91	
		BORING:	BH03		BH03		BH04		BH04		BH05	
		SITE:	NS2		NS2		NS2		NS2		NS2	
		DEPTH:	10		15		5		10		5	
COMPOUND NAME	UNITS	TEST CODE	RESULT	QUALIFIER	RESULT	QUALIFIER	RESULT	QUALIFIER	RESULT	QUALIFIER	RESULT	QUALIFIER
1,2,4-TRICHLOROBENZENE	UG/KG	BNA	350	U	22000	U	1200	U	7100	UJ	490	U
1,2-DICHLOROBENZENE	UG/KG	BNA	350	U	22000	U	1200	U	7100	UJ	490	U
1,3-DICHLOROBENZENE	UG/KG	BNA	350	U	22000	U	1200	U	7100	UJ	490	U
1,4-DICHLOROBENZENE	UG/KG	BNA	350	U	22000	U	1200	U	7100	UJ	490	U
2,4,5-TRICHLOROPHENOL	UG/KG	BNA	1700	U	110000	U	5600	UR	34000	UJ	2400	U
2,4,6-TRICHLOROPHENOL	UG/KG	BNA	350	U	22000	U	1200	UR	7100	UJ	490	U
2,4-DICHLOROPHENOL	UG/KG	BNA	350	U	22000	U	1200	UR	7100	UJ	490	U
2,4-DIMETHYLPHENOL	UG/KG	BNA	350	U	22000	U	1200	UR	7100	UJ	490	U
2,4-DINITROPHENOL	UG/KG	BNA	1700	U	110000	U	5600	UR	34000	UJ	2400	U
2,4-DINITROTOLUENE	UG/KG	BNA	350	U	22000	U	1200	U	7100	UJ	490	U
2,6-DINITRCTOLUENE	UG/KG	BNA	350	U	22000	U	1200	U	7100	UJ	490	U
2-CHLORONAPHTHALENE	UG/KG	BNA	350	U	22000	U	1200	U	7100	UJ	490	U
2-CHLOROPHENOL	UG/KG	BNA	350	U	22000	U	1200	UR	7100	UJ	490	U
2-METHYLNAPHTHALENE	UG/KG	BNA	350	U	31000		1200	U	11000	J	490	U
2-METHYLPHENOL	UG/KG	BNA	350	U	22000	U	1200	UR	7100	UJ	490	U
2-NITROANILINE	UG/KG	BNA	1700	U	110000	U	5600	U	34000	UJ	2400	U
2-NITROPHENOL	UG/KG	BNA	350	U	22000	U	1200	UR	7100	UJ	490	U
3,3'-DICHLOROBENZIDINE	UG/KG	BNA	690	U	44000	U	2300	U	14000	UJ	970	U
3-NITROANILINE	UG/KG	BNA	1700	U	110000	U	5600	U	34000	UJ	2400	U
4,6-DINITRO-2-METHYLPHENOL	UG/KG	BNA	1700	U	110000	U	5600	UR	34000	UJ	2400	U
4-BROMOPHENYL-PHENYLETHER	UG/KG	BNA	350	U	22000	U	1200	U	7100	UJ	490	U
4-CHLORO-3-METHYLPHENOL	UG/KG	BNA	350	U	22000	U	1200	UR	7100	UJ	490	U
4-CHLOROANILINE	UG/KG	BNA	350	U	22000	U	1200	U	7100	UJ	490	U
4-CHLOROPHENYL-PHENYLETHER	UG/KG	BNA	350	U	22000	U	1200	U	7100	UJ	490	U
4-METHYLPHENOL	UG/KG	BNA	350	U	22000	U	1200	UR	7100	UJ	490	U
4-NITROANILINE	UG/KG	BNA	1700	U	110000	U	5600	U	34000	UJ	2400	U
4-NITROPHENOL	UG/KG	BNA	1700	U	110000	U	5600	UR	34000	UJ	2400	U
ACENAPHTHENE	UG/KG	BNA	350	U	22000	U	720	J	7100	UJ	490	U
ACENAPHTHYLENE	UG/KG	BNA	350	U	22000	U	1200	U	7100	UJ	490	U
ANTHRACENE	UG/KG	BNA	350	U	22000	U	2400		7100	UJ	490	U
BENZO(A)ANTHRACENE	UG/KG	BNA	350	U	22000	U	5600		7100	UJ	490	U
BENZO(A)PYRENE	UG/KG	BNA	350	U	22000	U	3100		7100	UJ	490	U
BENZO(B)FLUORANTHENE	UG/KG	BNA	350	U	22000	U	3100		7100	UJ	490	U
BENZO(G,H,I)PERYLENE	UG/KG	BNA	350	U	22000	U	1500		7100	UJ	490	U
BENZO(K)FLUORANTHENE	UG/KG	BNA	350	U	22000	U	4300		7100	UJ	490	U
BENZOIC ACID	UG/KG	BNA	1700	U	110000	U	5600	UR	34000	UJ	2400	U
BENZYL ALCOHOL	UG/KG	BNA	350	U	22000	U	1200	U	7100	UJ	490	U
BIS(2-CHLOROETHOXY)METHANE	UG/KG	BNA	350	U	22000	U	1200	U	7100	UJ	490	U
BIS(2-CHLOROETHYL)ETHER	UG/KG	BNA	350	U	22000	U	1200	U	7100	UJ	490	U
BIS(2-CHLOROISOPROPYL)ETHER	UG/KG	BNA	350	U	22000	U	1200	U	7100	UJ	490	U
BIS(2-ETHYLHEXYL)PHTHALATE	UG/KG	BNA	550		22000	U	1200	U	7100	UJ	490	U
BUTYLBENZYLPHTHALATE	UG/KG	BNA	350	U	22000	U	1200	U	7100	UJ	490	U
CHRYSENE	UG/KG	BNA	350	U	22000	U	5600		7100	UJ	490	U
DI-N-BUTYLPHTHALATE	UG/KG	BNA	350	U	22000	U	1200	U	7100	UJ	490	U
DI-N-OCTYLPHTHALATE	UG/KG	BNA	350	U	22000	U	1200	U	7100	UJ	490	U
DIBENZ(A,H)ANTHRACENE	UG/KG	BNA	350	U	22000	U	1200	U	7100	UJ	490	U
DIBENZOFURAN	UG/KG	BNA	350	U	22000	U	460	J	7100	UJ	490	U
DIETHYLPHTHALATE	UG/KG	BNA	350	U	22000	U	1200	U	7100	UJ	490	U
DIMETHYLPHTHALATE	UG/KG	BNA	350	U	22000	U	1200	U	7100	UJ	490	U
FLUORANTHENE	UG/KG	BNA	350	U	22000	U	15000		7100	UJ	490	U
FLUORENE	UG/KG	BNA	350	U	4900	J	970	J	7100	UJ	490	U

NAVSTA-SAN DIEGO
SITE 2 SOILS

		SAMPLE NUMBER:	NS2-BH03-S01-10		NS2-BH03-S02-15		NS2-BH04-S01-5		NS2-BH04-S02-10		NS2-BH05-S01-5	
		SAMPLING DATE:	02/04/91		02/04/91		02/05/91		02/05/91		02/05/91	
		BORING:	BH03		BH03		BH04		BH04		BH05	
		SITE:	NS2		NS2		NS2		NS2		NS2	
		DEPTH:	10		15		5		10		5	
COMPOUND NAME	UNITS	TEST CODE	RESULT	QUALIFIER	RESULT	QUALIFIER	RESULT	QUALIFIER	RESULT	QUALIFIER	RESULT	QUALIFIER
HEXACHLOROBENZENE	UG/KG	BNA	350	U	22000	U	1200	U	7100	UJ	490	U
HEXACHLOROBUTADIENE	UG/KG	BNA	350	U	22000	U	1200	U	7100	UJ	490	U
HEXACHLOROCYCLOPENTADIENE	UG/KG	BNA	350	U	22000	U	1200	U	7100	UJ	490	U
HEXACHLOROETHANE	UG/KG	BNA	350	U	22000	U	1200	U	7100	UJ	490	U
INDENO(1,2,3-C,D)PYRENE	UG/KG	BNA	350	U	22000	U	1300		7100	UJ	490	U
ISOPHORONE	UG/KG	BNA	350	U	22000	U	1200	U	7100	UJ	490	U
N-NITROSO-DI-N-PROPYLAMINE	UG/KG	BNA	350	U	22000	U	1200	U	7100	UJ	490	U
N-NITROSODIPHENYLAMINE (1)	UG/KG	BNA	350	U	22000	U	1200	U	7100	UJ	490	U
NAPHTHALENE	UG/KG	BNA	350	U	6900	J	1200	U	3400	J	490	U
NITROBENZENE	UG/KG	BNA	350	U	22000	U	1200	U	7100	UJ	490	U
PENTACHLOROPHENOL	UG/KG	BNA	1700	U	110000	U	5600	UR	34000	UJ	2400	U
PHENANTHRENE	UG/KG	BNA	350	U	6600	J	13000		3300	J	490	U
PHENOL	UG/KG	BNA	350	U	22000	U	1200	UR	7100	UJ	490	U
PYRENE	UG/KG	BNA	350	U	22000	U	11000		1500	J	63	J
ANTIMONY	MG/KG	CAC METALS	3.9	U	3.9	U	9.6	BJ	15.3	J	5.2	U
ARSENIC	MG/KG	CAC METALS	0.46	B	0.55	B	5.0	J	2.7	J	4.0	
BARIUM	MG/KG	CAC METALS	103		29.7	B	107		56.7		171	
BERYLLIUM	MG/KG	CAC METALS	1.6		0.62	B	2.5		1.3		4.2	
CADMIUM	MG/KG	CAC METALS	0.82	U	0.82	U	0.85	U	0.80	U	1.1	U
CHROMIUM	MG/KG	CAC METALS	12.6		5.0		33.1		11.0		34.5	
COBALT	MG/KG	CAC METALS	8.0	B	2.7	B	8.3	B	4.2	B	16.8	
COPPER	MG/KG	CAC METALS	13.0		5.9		287	J	271	J	47.2	U
LEAD	MG/KG	CAC METALS	3.6		0.71		319	J	352	J	12.1	
MERCURY	MG/KG	CAC METALS	0.05	U	0.05	U	0.71	J	0.05	U	0.07	U
MOLYBDENUM	MG/KG	CAC METALS	1.4	U	1.4	U	1.5	U	1.4	U	1.9	U
NICKEL	MG/KG	CAC METALS	1.9	B	1.8	U	17.2		6.0	U	9.8	U
SELENIUM	MG/KG	CAC METALS	0.19	U	0.20	U	0.50	U	0.20	U	0.27	U
SILVER	MG/KG	CAC METALS	0.74	B	0.63	B	1.5	U	0.60	U	2.7	U
THALLIUM	MG/KG	CAC METALS	0.39	U	0.75	B	0.45	U	0.47	U	0.62	B
VANADIUM	MG/KG	CAC METALS	46.4		19.5		55.2		24.6		95.5	
ZINC	MG/KG	CAC METALS	27.8		9.1		467	U	260	U	84.8	U
ANTIMONY	UG/KG	CAC METALS										
ARSENIC	UG/KG	CAC METALS										
BARIUM	UG/KG	CAC METALS										
BERYLLIUM	UG/KG	CAC METALS										
CADMIUM	UG/KG	CAC METALS										
CHROMIUM	UG/KG	CAC METALS										
COBALT	UG/KG	CAC METALS										
COPPER	UG/KG	CAC METALS										
LEAD	UG/KG	CAC METALS										
MERCURY	UG/KG	CAC METALS										
MOLYBDENUM	UG/KG	CAC METALS										
NICKEL	UG/KG	CAC METALS										
SELENIUM	UG/KG	CAC METALS										
SILVER	UG/KG	CAC METALS										
THALLIUM	UG/KG	CAC METALS										
VANADIUM	UG/KG	CAC METALS										
ZINC	UG/KG	CAC METALS										
CAC WET EXTRACTION	DATE	CAC WET EX										
COPPER	MG/L	CAC WET EX					7.73		0.06			
LEAD	MG/L	CAC WET EX					0.238		0.044	U		

NAVSTA-SAN DIEGO
SITE 2 SOILS

		SAMPLE NUMBER:	NS2-BH03-S01-10		NS2-BH03-S02-15		NS2-BH04-S01-5		NS2-BH04-S02-10		NS2-BH05-S01-5	
		SAMPLING DATE:	02/04/91		02/04/91		02/05/91		02/05/91		02/05/91	
		BORING:	BH03		BH03		BH04		BH04		BH05	
		SITE:	NS2		NS2		NS2		NS2		NS2	
		DEPTH:	10		15		5		10		5	
COMPOUND NAME	UNITS	TEST CODE	RESULT	QUALIFIER	RESULT	QUALIFIER	RESULT	QUALIFIER	RESULT	QUALIFIER	RESULT	QUALIFIER
MERCURY	MG/L	CAC WET EX										
TOTAL CYANIDE	MG/KG	CN	1	UJ	1	UJ	1	UJ	1	UJ	1	UJ
TOTAL CYANIDE	MG/L	CN										
4,4'-DDD	UG/KG	PEST / PCB	17	U	18	U	190	UJ	17	UJ	24	U
4,4'-DDE	UG/KG	PEST / PCB	17	U	18	U	190	UJ	17	UJ	24	U
4,4'-DDT	UG/KG	PEST / PCB	17	U	18	U	190	UJ	17	UJ	24	U
ALDRIN	UG/KG	PEST / PCB	8.4	U	8.8	U	93	UJ	8.6	UJ	12	U
ALPHA CHLORDANE	UG/KG	PEST / PCB										
ALPHA-BHC	UG/KG	PEST / PCB	8.4	U	8.8	U	93	UJ	8.6	UJ	12	U
ALPHA-CHLORDANE	UG/KG	PEST / PCB	84	U	88	U	930	UJ	86	UJ	120	U
BETA-BHC	UG/KG	PEST / PCB	8.4	U	8.8	U	93	UJ	8.6	UJ	12	U
CHLORDANE	UG/KG	PEST / PCB										
DELTA-BHC	UG/KG	PEST / PCB	8.4	U	8.8	U	93	UJ	8.6	UJ	12	U
DIELDRIN	UG/KG	PEST / PCB	17	U	18	U	190	UJ	17	UJ	24	U
ENDOSULFAN I	UG/KG	PEST / PCB	8.4	U	8.8	U	93	UJ	8.6	UJ	12	U
ENDOSULFAN II	UG/KG	PEST / PCB	17	U	18	U	190	UJ	17	UJ	24	U
ENDOSULFAN SULFATE	UG/KG	PEST / PCB	17	U	18	U	190	UJ	17	UJ	24	U
ENDRIN	UG/KG	PEST / PCB	17	U	18	U	190	UJ	17	UJ	24	U
ENDRIN KETONE	UG/KG	PEST / PCB	17	U	18	U	190	UJ	17	UJ	24	U
GAMMA CHLORDANE	UG/KG	PEST / PCB										
GAMMA-BHC (LINDANE)	UG/KG	PEST / PCB	8.4	U	8.8	U	93	UJ	8.6	UJ	12	U
GAMMA-CHLORDANE	UG/KG	PEST / PCB	84	U	88	U	930	UJ	86	UJ	120	U
HEPTACHLOR	UG/KG	PEST / PCB	8.4	U	8.8	U	93	UJ	8.6	UJ	12	U
HEPTACHLOR EPOXIDE	UG/KG	PEST / PCB	8.4	U	8.8	U	93	UJ	8.6	UJ	12	U
METHOXYCHLOR	UG/KG	PEST / PCB	84	U	88	U	930	UJ	86	UJ	120	U
PCB-1016	UG/KG	PEST / PCB	84	U	88	U	930	UJ	86	UJ	120	U
PCB-1221	UG/KG	PEST / PCB	84	U	88	U	930	UJ	86	UJ	120	U
PCB-1232	UG/KG	PEST / PCB	84	U	88	U	930	UJ	86	UJ	120	U
PCB-1242	UG/KG	PEST / PCB	84	U	88	U	930	UJ	86	UJ	120	U
PCB-1248	UG/KG	PEST / PCB	84	U	88	U	930	UJ	86	UJ	120	U
PCB-1254	UG/KG	PEST / PCB	170	U	180	U	1900	UJ	170	UJ	240	U
PCB-1260	UG/KG	PEST / PCB	170	U	180	U	1900	UJ	170	UJ	240	U
TOXAPHENE	UG/KG	PEST / PCB	170	U	180	U	1900	UJ	170	UJ	240	U
DIESEL	MG/KG	TPHC	1120		15000	D	270		4840	D	115	
HYDRAULIC OIL	MG/KG	TPHC	10	U	10	U	10	U	10	U	10	U
MOTOR OIL	MG/KG	TPHC	10	U	10	U	10	U	10	U	10	U
STODDARD	MG/KG	TPHC	10	U	10	U	10	U	10	U	10	U
DIESEL	UG/KG	TPHC										
HYDRAULIC OIL	UG/KG	TPHC										
MOTOR OIL	UG/KG	TPHC										
STODDARD	UG/KG	TPHC										
1,1,1-TRICHLOROETHANE	UG/KG	VOA	5	U	690	U	6		670	U	35	U
1,1,2,2-TETRACHLOROETHANE	UG/KG	VOA	5	U	690	U	6	U	670	U	35	U
1,1,2-TRICHLOROETHANE	UG/KG	VOA	5	U	690	U	6	U	670	U	35	U
1,1-DICHLOROETHANE	UG/KG	VOA	5	U	690	U	6	U	670	U	35	U
1,1-DICHLOROETHENE	UG/KG	VOA	5	U	690	U	6	U	670	U	35	U
1,2-DICHLOROETHANE	UG/KG	VOA	5	U	690	U	6	U	670	U	35	U
1,2-DICHLOROETHENE (TOTAL)	UG/KG	VOA	5	U	690	U	6	U	670	U	35	U
1,2-DICHLOROPROPANE	UG/KG	VOA	5	U	690	U	6	U	670	U	35	U
2-BUTANONE	UG/KG	VOA	11	U	1400	U	11	U	1300	U	69	U
2-HEXANONE	UG/KG	VOA	11	U	1400	U	11	U	1300	U	69	U

NAVSTA-SAN DIEGO
SITE 2 SOILS

		SAMPLE NUMBER:	NS2-BH03-S01-10		NS2-BH03-S02-15		NS2-BH04-S01-5		NS2-BH04-S02-10		NS2-BH05-S01-5	
		SAMPLING DATE:	02/04/91		02/04/91		02/05/91		02/05/91		02/05/91	
		BORING:	BH03		BH03		BH04		BH04		BH05	
		SITE:	NS2		NS2		NS2		NS2		NS2	
		DEPTH:	10		15		5		10		5	
COMPOUND NAME	UNITS	TEST CODE	RESULT	QUALIFIER	RESULT	QUALIFIER	RESULT	QUALIFIER	RESULT	QUALIFIER	RESULT	QUALIFIER
4-METHYL-2-PENTANONE	UG/KG	VOA	11	U	1400	U	11	U	1300	U	69	U
ACETONE	UG/KG	VOA	12	U	1400	U	100	U	1300	U	74	U
BENZENE	UG/KG	VOA	5	U	690	U	6	U	670	U	35	U
BROMODICHLOROMETHANE	UG/KG	VOA	5	U	690	U	6	U	670	U	35	U
BROMOFORM	UG/KG	VOA	5	U	690	U	6	U	670	U	35	U
BROMOMETHANE	UG/KG	VOA	11	U	1400	U	11	U	1300	U	69	U
CARBON DISULFIDE	UG/KG	VOA	5	U	690	U	6	U	670	U	35	U
CARBON TETRACHLORIDE	UG/KG	VOA	5	U	690	U	6	U	670	U	35	U
CHLOROBENZENE	UG/KG	VOA	5	U	690	U	6	U	670	U	35	U
CHLOROETHANE	UG/KG	VOA	11	U	1400	U	11	U	1300	U	69	U
CHLOROFORM	UG/KG	VOA	5	U	690	U	6	U	670	U	35	U
CHLOROMETHANE	UG/KG	VOA	11	U	1400	U	11	U	1300	U	69	U
CIS-1,3-DICHLOROPROPENE	UG/KG	VOA	5	U	690	U	6	U	670	U	35	U
DIBROMOCHLOROMETHANE	UG/KG	VOA	5	U	690	U	6	U	670	U	35	U
ETHYLBENZENE	UG/KG	VOA	5	U	650	J	6	U	450	J	35	U
METHYLENE CHLORIDE	UG/KG	VOA	10	U	890	U	9	U	720	U	35	U
STYRENE	UG/KG	VOA	5	U	690	U	6	U	670	U	35	U
TETRACHLOROETHENE	UG/KG	VOA	5	U	690	U	6	U	670	U	35	U
TOLUENE	UG/KG	VOA	7		190	J	67		1500		35	U
TRANS-1,3-DICHLOROPROPENE	UG/KG	VOA	5	U	690	U	6	U	670	U	35	U
TRICHLOROETHENE	UG/KG	VOA	5	U	690	U	6	U	170	J	35	U
VINYL ACETATE	UG/KG	VOA	11	U	1400	U	11	U	1300	U	69	U
VINYL CHLORIDE	UG/KG	VOA	11	U	1400	U	11	U	1300	U	69	U
XYLENES (TOTAL)	UG/KG	VOA	5	U	410	J	6	U	970		35	U

NAVSTA-SAN DIEGO
SITE 2 SOILS

		SAMPLE NUMBER:	NS2-BH05-S02-10		NS2-BH06-S01-10		NS2-BH06-S02-15		NS2-BH07-S01-10		NS2-BH07-S02-15	
		SAMPLING DATE:	02/05/91		02/05/91		02/05/91		02/06/91		02/06/91	
		BORING:	BH05		BH06		BH06		BH07		BH07	
		SITE:	NS2		NS2		NS2		NS2		NS2	
		DEPTH:	10		10		15		10		15	
COMPOUND NAME	UNITS	TEST CODE	RESULT	QUALIFIER	RESULT	QUALIFIER	RESULT	QUALIFIER	RESULT	QUALIFIER	RESULT	QUALIFIER
1,2,4-TRICHLOROBENZENE	UG/KG	BNA	470	U	340	U	370	U	340	U	410	U
1,2-DICHLOROBENZENE	UG/KG	BNA	470	U	340	U	370	U	340	U	410	U
1,3-DICHLOROBENZENE	UG/KG	BNA	470	U	340	U	370	U	340	U	410	U
1,4-DICHLOROBENZENE	UG/KG	BNA	470	U	340	U	370	U	340	U	410	U
2,4,5-TRICHLOROPHENOL	UG/KG	BNA	2300	U	1700	U	1800	U	1700	U	2000	U
2,4,6-TRICHLOROPHENOL	UG/KG	BNA	470	U	340	U	370	U	340	U	410	U
2,4-DICHLOROPHENOL	UG/KG	BNA	470	U	340	U	370	U	340	U	410	U
2,4-DIMETHYLPHENOL	UG/KG	BNA	470	U	340	U	370	U	340	U	410	U
2,4-DINITROPHENOL	UG/KG	BNA	2300	U	1700	U	1800	U	1700	U	2000	U
2,4-DINITROTOLUENE	UG/KG	BNA	470	U	340	U	370	U	340	U	410	U
2,6-DINITROTOLUENE	UG/KG	BNA	470	U	340	U	370	U	340	U	410	U
2-CHLORONAPHTHALENE	UG/KG	BNA	470	U	340	U	370	U	340	U	410	U
2-CHLOROPHENOL	UG/KG	BNA	470	U	340	U	370	U	340	U	410	U
2-METHYLNAPHTHALENE	UG/KG	BNA	470	U	340	U	370	U	340	U	410	U
2-METHYLPHENOL	UG/KG	BNA	470	U	340	U	370	U	340	U	410	U
2-NITROANILINE	UG/KG	BNA	2300	U	1700	U	1800	U	1700	U	2000	U
2-NITROPHENOL	UG/KG	BNA	470	U	340	U	370	U	340	U	410	U
3,3'-DICHLOROBENZIDINE	UG/KG	BNA	940	U	690	U	730	U	690	U	820	U
3-NITROANILINE	UG/KG	BNA	2300	U	1700	U	1800	U	1700	U	2000	U
4,6-DINITRO-2-METHYLPHENOL	UG/KG	BNA	2300	U	1700	U	1800	U	1700	U	2000	U
4-BROMOPHENYL-PHENYLETHER	UG/KG	BNA	470	U	340	U	370	U	340	U	410	U
4-CHLORO-3-METHYLPHENOL	UG/KG	BNA	470	U	340	U	370	U	340	U	410	U
4-CHLOROANILINE	UG/KG	BNA	470	U	340	U	370	U	340	U	410	U
4-CHLOROPHENYL-PHENYLETHER	UG/KG	BNA	470	U	340	U	370	U	340	U	410	U
4-METHYLPHENOL	UG/KG	BNA	470	U	340	U	370	U	340	U	410	U
4-NITROANILINE	UG/KG	BNA	2300	U	1700	U	1800	U	1700	U	2000	U
4-NITROPHENOL	UG/KG	BNA	2300	U	1700	U	1800	U	1700	U	2000	U
ACENAPHTHENE	UG/KG	BNA	470	U	340	U	370	U	340	U	410	U
ACENAPHTHYLENE	UG/KG	BNA	470	U	340	U	370	U	340	U	410	U
ANTHRACENE	UG/KG	BNA	470	U	340	U	370	U	340	U	410	U
BENZO(A)ANTHRACENE	UG/KG	BNA	470	U	340	U	370	U	340	U	410	U
BENZO(A)PYRENE	UG/KG	BNA	470	U	340	U	370	U	340	U	410	U
BENZO(B)FLUORANTHENE	UG/KG	BNA	470	U	340	U	370	U	340	U	410	U
BENZO(G,H,I)PERYLENE	UG/KG	BNA	470	U	340	U	370	U	340	U	410	U
BENZO(K)FLUORANTHENE	UG/KG	BNA	470	U	340	U	370	U	340	U	410	U
BENZOIC ACID	UG/KG	BNA	2300	U	1700	U	1800	U	1700	U	2000	U
BENZYL ALCOHOL	UG/KG	BNA	470	U	340	U	370	U	340	U	410	U
BIS(2-CHLOROETHOXY)METHANE	UG/KG	BNA	470	U	340	U	370	U	340	U	410	U
BIS(2-CHLOROETHYL)ETHER	UG/KG	BNA	470	U	340	U	370	U	340	U	410	U
BIS(2-CHLOROISOPROPYL)ETHER	UG/KG	BNA	470	U	340	U	370	U	340	U	410	U
BIS(2-ETHYLHEXYL)PHTHALATE	UG/KG	BNA	470	U	340	U	370	U	340	U	410	U
BUTYLBENZYLPHTHALATE	UG/KG	BNA	470	U	340	U	370	U	340	U	410	U
CHRYSENE	UG/KG	BNA	470	U	340	U	370	U	340	U	410	U
DI-N-BUTYLPHTHALATE	UG/KG	BNA	470	U	340	U	370	U	340	U	410	U
DI-N-OCTYLPHTHALATE	UG/KG	BNA	470	U	340	U	370	U	340	U	410	U
DIBENZ(A,H)ANTHRACENE	UG/KG	BNA	470	U	340	U	370	U	340	U	410	U
DIBENZOFURAN	UG/KG	BNA	470	U	340	U	370	U	340	U	410	U
DIETHYLPHTHALATE	UG/KG	BNA	470	U	340	U	370	U	340	U	410	U
DIMETHYLPHTHALATE	UG/KG	BNA	470	U	340	U	370	U	340	U	410	U
FLUORANTHENE	UG/KG	BNA	470	U	340	U	370	U	340	U	410	U
FLUORENE	UG/KG	BNA	470	U	340	U	370	U	340	U	410	U

NAVSTA-SAN DIEGO
SITE 2 SOILS

		SAMPLE NUMBER:	NS2-BH05-S02-10		NS2-BH06-S01-10		NS2-BH06-S02-15		NS2-BH07-S01-10		NS2-BH07-S02-15	
		SAMPLING DATE:	02/05/91		02/05/91		02/05/91		02/06/91		02/06/91	
		BORING:	BH05		BH06		BH06		BH07		BH07	
		SITE:	NS2		NS2		NS2		NS2		NS2	
		DEPTH:	10		10		15		10		15	
COMPOUND NAME	UNITS	TEST CODE	RESULT	QUALIFIER	RESULT	QUALIFIER	RESULT	QUALIFIER	RESULT	QUALIFIER	RESULT	QUALIFIER
HEXACHLOROBENZENE	UG/KG	BNA	470	U	340	U	370	U	340	U	410	U
HEXACHLOROBUTADIENE	UG/KG	BNA	470	U	340	U	370	U	340	U	410	U
HEXACHLOROCYCLOPENTADIENE	UG/KG	BNA	470	U	340	U	370	U	340	U	410	U
HEXACHLOROETHANE	UG/KG	BNA	470	U	340	U	370	U	340	U	410	U
INDENO(1,2,3-C,D)PYRENE	UG/KG	BNA	470	U	340	U	370	U	340	U	410	U
ISOPHORONE	UG/KG	BNA	470	U	340	U	370	U	340	U	410	U
N-NITROSO-DI-N-PROPYLAMINE	UG/KG	BNA	470	U	340	U	370	U	340	U	410	U
N-NITROSODIPHENYLAMINE (1)	UG/KG	BNA	470	U	340	U	370	U	340	U	410	U
NAPHTHALENE	UG/KG	BNA	470	U	340	U	370	U	340	U	410	U
NITROBENZENE	UG/KG	BNA	470	U	340	U	370	U	340	U	410	U
PENTACHLOROPHENOL	UG/KG	BNA	2300	U	1700	U	1800	U	1700	U	2000	U
PHENANTHRENE	UG/KG	BNA	470	U	340	U	370	U	340	U	410	U
PHENOL	UG/KG	BNA	470	U	340	U	370	U	340	U	410	U
PYRENE	UG/KG	BNA	470	U	340	U	370	U	340	U	410	U
ANTIMONY	MG/KG	CAC METALS	5.2	U	3.7	U	4.0	U	3.7	U	4.5	U
ARSENIC	MG/KG	CAC METALS	1.9	B	0.67	B	0.55	B	0.53	B	0.72	B
BARIUM	MG/KG	CAC METALS	78.5		52.1		50.1		37.2	B	47.0	B
BERYLLIUM	MG/KG	CAC METALS	1.9		0.27	B	0.49	B	0.52	B	0.51	B
CADMIUM	MG/KG	CAC METALS	1.1	U	0.79	U	0.87	U	0.78	U	0.95	U
CHROMIUM	MG/KG	CAC METALS	13.9		6.0		5.3		5.1		6.0	
COBALT	MG/KG	CAC METALS	8.0	B	3.1	B	2.0	B	3.3	B	3.8	B
COPPER	MG/KG	CAC METALS	36.6	U	46.1	U	18.3	U	6.2	U	7.1	U
LEAD	MG/KG	CAC METALS	3.4	U	1.2	U	0.92	U	0.92	U	1.6	U
MERCURY	MG/KG	CAC METALS	0.07	U	0.05	U	0.06	U	0.16	U	0.19	U
MOLYBDENUM	MG/KG	CAC METALS	1.9	U	1.4	U	1.5	U	1.4	U	1.7	U
NICKEL	MG/KG	CAC METALS	3.2	U	1.8	U	2.0	U	2.5	B	2.3	B
SELENIUM	MG/KG	CAC METALS	0.27	U	0.20	U	0.21	U	0.19	U	0.23	U
SILVER	MG/KG	CAC METALS	0.82	U	1.2	U	1.1	U	0.69	U	1.6	U
THALLIUM	MG/KG	CAC METALS	0.93	B	0.61	B	0.42	U	0.19	U	0.23	U
VANADIUM	MG/KG	CAC METALS	37.2		30.5		28.5		26.1		31.4	
ZINC	MG/KG	CAC METALS	41.5	U	18.3	U	12.3	U	12.2	U	15.5	U
ANTIMONY	UG/KG	CAC METALS										
ARSENIC	UG/KG	CAC METALS										
BARIUM	UG/KG	CAC METALS										
BERYLLIUM	UG/KG	CAC METALS										
CADMIUM	UG/KG	CAC METALS										
CHROMIUM	UG/KG	CAC METALS										
COBALT	UG/KG	CAC METALS										
COPPER	UG/KG	CAC METALS										
LEAD	UG/KG	CAC METALS										
MERCURY	UG/KG	CAC METALS										
MOLYBDENUM	UG/KG	CAC METALS										
NICKEL	UG/KG	CAC METALS										
SELENIUM	UG/KG	CAC METALS										
SILVER	UG/KG	CAC METALS										
THALLIUM	UG/KG	CAC METALS										
VANADIUM	UG/KG	CAC METALS										
ZINC	UG/KG	CAC METALS										
CAC WET EXTRACTION	DATE	CAC WET EX										
COPPER	MG/L	CAC WET EX										
LEAD	MG/L	CAC WET EX										

NAVSTA-SAN DIEGO
SITE 2 SOILS

		SAMPLE NUMBER:	NS2-BH05-S02-10		NS2-BH06-S01-10		NS2-BH06-S02-15		NS2-BH07-S01-10		NS2-BH07-S02-15	
		SAMPLING DATE:	02/05/91		02/05/91		02/05/91		02/06/91		02/06/91	
		BORING:	BH05		BH06		BH06		BH07		BH07	
		SITE:	NS2		NS2		NS2		NS2		NS2	
		DEPTH:	10		10		15		10		15	
COMPOUND NAME	UNITS	TEST CODE	RESULT	QUALIFIER	RESULT	QUALIFIER	RESULT	QUALIFIER	RESULT	QUALIFIER	RESULT	QUALIFIER
MERCURY	MG/L	CAC WET EX										
TOTAL CYANIDE	MG/KG	CN	1	UJ	1	UJ	1	UJ				
TOTAL CYANIDE	MG/L	CN										
4,4'-DDD	UG/KG	PEST / PCB	23	U	17	U	18	U	17	U	20	U
4,4'-DDE	UG/KG	PEST / PCB	23	U	17	U	18	U	17	U	20	U
4,4'-DDT	UG/KG	PEST / PCB	23	U	17	U	18	U	17	U	20	U
ALDRIN	UG/KG	PEST / PCB	11	U	8.3	U	8.9	U	8.3	U	10	U
ALPHA CHLORDANE	UG/KG	PEST / PCB										
ALPHA-BHC	UG/KG	PEST / PCB	11	U	8.3	U	8.9	U	8.3	U	10	U
ALPHA-CHLORDANE	UG/KG	PEST / PCB	110	U	83	U	89	U				
BETA-BHC	UG/KG	PEST / PCB	11	U	8.3	U	8.9	U	8.3	U	10	U
CHLORDANE	UG/KG	PEST / PCB							83	U	100	U
DELTA-BHC	UG/KG	PEST / PCB	11	U	8.3	U	8.9	U	8.3	U	10	U
DIELDRIN	UG/KG	PEST / PCB	23	U	17	U	18	U	17	U	20	U
ENDOSULFAN I	UG/KG	PEST / PCB	11	U	8.3	U	8.9	U	8.3	U	10	U
ENDOSULFAN II	UG/KG	PEST / PCB	23	U	17	U	18	U	17	U	20	U
ENDOSULFAN SULFATE	UG/KG	PEST / PCB	23	U	17	U	18	U	17	U	20	U
ENDRIN	UG/KG	PEST / PCB	23	U	17	U	18	U	17	U	20	U
ENDRIN KETONE	UG/KG	PEST / PCB	23	U	17	U	18	U	17	U	20	U
GAMMA CHLORDANE	UG/KG	PEST / PCB										
GAMMA-BHC (LINDANE)	UG/KG	PEST / PCB	11	U	8.3	U	8.9	U	8.3	U	10	U
GAMMA-CHLORDANE	UG/KG	PEST / PCB	110	U	83	U	89	U				
HEPTACHLOR	UG/KG	PEST / PCB	11	U	8.3	U	8.9	U	8.3	U	10	U
HEPTACHLOR EPOXIDE	UG/KG	PEST / PCB	11	U	8.3	U	8.9	U	8.3	U	10	U
METHOXYCHLOR	UG/KG	PEST / PCB	110	U	83	U	89	U	83	U	100	U
PCB-1016	UG/KG	PEST / PCB	110	U	83	U	89	U	83	U	100	U
PCB-1221	UG/KG	PEST / PCB	110	U	83	U	89	U	83	U	100	U
PCB-1232	UG/KG	PEST / PCB	110	U	83	U	89	U	83	U	100	U
PCB-1242	UG/KG	PEST / PCB	110	U	83	U	89	U	83	U	100	U
PCB-1248	UG/KG	PEST / PCB	110	U	83	U	89	U	83	U	100	U
PCB-1254	UG/KG	PEST / PCB	230	U	170	U	180	U	170	U	200	U
PCB-1260	UG/KG	PEST / PCB	230	U	170	U	180	U	170	U	200	U
TOXAPHENE	UG/KG	PEST / PCB	230	U	170	U	180	U	170	U	200	U
DIESEL	MG/KG	TPHC	10	U	16		10		72		10	U
HYDRAULIC OIL	MG/KG	TPHC	10	U	10	U	10	U	10	U	10	U
MOTOR OIL	MG/KG	TPHC	10	U	10	U	10	U	10	U	10	U
STODDARD	MG/KG	TPHC	10	U	10		10	U	10	U	10	U
DIESEL	UG/KG	TPHC										
HYDRAULIC OIL	UG/KG	TPHC										
MOTOR OIL	UG/KG	TPHC										
STODDARD	UG/KG	TPHC										
1,1,1-TRICHLOROETHANE	UG/KG	VOA	8		5	U	6	U	13	U	6	U
1,1,2,2-TETRACHLOROETHANE	UG/KG	VOA	6	U	5	U	6	U	13	U	6	U
1,1,2-TRICHLOROETHANE	UG/KG	VOA	6	U	5	U	6	U	13	U	6	U
1,1-DICHLOROETHANE	UG/KG	VOA	6	U	5	U	6	U	13	U	6	U
1,1-DICHLOROETHENE	UG/KG	VOA	6	U	5	U	6	U	13	U	6	U
1,2-DICHLOROETHANE	UG/KG	VOA	6	U	5	U	6	U	13	U	6	U
1,2-DICHLOROETHENE (TOTAL)	UG/KG	VOA	6	U	5	U	6	U	13	U	6	U
1,2-DICHLOROPROPANE	UG/KG	VOA	6	U	5	U	6	U	13	U	6	U
2-BUTANONE	UG/KG	VOA	12	U	11	U	11	U	26	U	12	U
2-HEXANONE	UG/KG	VOA	12	U	11	U	11	U	26	U	12	U

NAVSTA-SAN DIEGO
SITE 2 SOILS

		SAMPLE NUMBER:	NS2-BH05-S02-10		NS2-BH06-S01-10		NS2-BH06-S02-15		NS2-BH07-S01-10		NS2-BH07-S02-15	
		SAMPLING DATE:	02/05/91		02/05/91		02/05/91		02/06/91		02/06/91	
		BORING:	BH05		BH06		BH06		BH07		BH07	
		SITE:	NS2		NS2		NS2		NS2		NS2	
		DEPTH:	10		10		15		10		15	
COMPOUND NAME	UNITS	TEST CODE	RESULT	QUALIFIER	RESULT	QUALIFIER	RESULT	QUALIFIER	RESULT	QUALIFIER	RESULT	QUALIFIER
4-METHYL-2-PENTANONE	UG/KG	VOA	12	U	11	U	11	U	26	U	12	U
ACETONE	UG/KG	VOA	160	B	11	U	86		430	B	200	
BENZENE	UG/KG	VOA	6	U	5	U	6	U	13	U	6	U
BROMODICHLOROMETHANE	UG/KG	VOA	6	U	5	U	6	U	13	U	6	U
BROMOFORM	UG/KG	VOA	6	U	5	U	6	U	13	U	6	U
BROMOMETHANE	UG/KG	VOA	12	U	11	U	11	U	26	U	12	U
CARBON DISULFIDE	UG/KG	VOA	3	J	5	U	6	U	13	U	6	U
CARBON TETRACHLORIDE	UG/KG	VOA	6	U	5	U	6	U	13	U	6	U
CHLOROBENZENE	UG/KG	VOA	6	U	5	U	6	U	13	U	6	U
CHLOROETHANE	UG/KG	VOA	12	U	11	U	11	U	26	U	12	U
CHLOROFORM	UG/KG	VOA	6	U	5	U	6	U	13	U	6	U
CHLOROMETHANE	UG/KG	VOA	12	U	11	U	11	U	26	U	12	U
CIS-1,3-DICHLOROPROPENE	UG/KG	VOA	6	U	5	U	6	U	13	U	6	U
DIBROMOCHLOROMETHANE	UG/KG	VOA	6	U	5	U	6	U	13	U	6	U
ETHYLBENZENE	UG/KG	VOA	6	U	5	U	6	U	13	U	6	U
METHYLENE CHLORIDE	UG/KG	VOA	8	U	7	U	9	U	19	U	10	U
STYRENE	UG/KG	VOA	6	U	5	U	6	U	13	U	6	U
TETRACHLOROETHENE	UG/KG	VOA	6	U	5	U	6	U	13	U	6	U
TOLUENE	UG/KG	VOA	21		5	U	6	U	14		42	
TRANS-1,3-DICHLOROPROPENE	UG/KG	VOA	6	U	5	U	6	U	13	U	6	U
TRICHLOROETHENE	UG/KG	VOA	6	U	5	U	6	U	13	U	6	U
VINYL ACETATE	UG/KG	VOA	12	U	11	U	11	U	26	U	12	U
VINYL CHLORIDE	UG/KG	VOA	12	U	11	U	11	U	26	U	12	U
XYLENES (TOTAL)	UG/KG	VOA	6	U	5	U	6	U	13	U	6	U

NAVSTA-SAN DIEGO
SITE 2 SOILS

		SAMPLE NUMBER:	NS2-BH08-S01-5		NS2-BH08-S01-5-FD		NS2-BH08-S03-15		NS2-BH09-S01-5		NS2-BH09-S02-10	
		SAMPLING DATE:	02/06/91		02/06/91		02/06/91		02/07/91		02/07/91	
		BORING:	BH08		BH08		BH08		BH09		BH09	
		SITE:	NS2		NS2		NS2		NS2		NS2	
		DEPTH:	5		5-FD		15		5		10	
COMPOUND NAME	UNITS	TEST CODE	RESULT	QUALIFIER	RESULT	QUALIFIER	RESULT	QUALIFIER	RESULT	QUALIFIER	RESULT	QUALIFIER
1,2,4-TRICHLOROBENZENE	UG/KG	BNA	340	U	350	U	400	U	340	U	400	U
1,2-DICHLOROBENZENE	UG/KG	BNA	340	U	350	U	400	U	340	U	400	U
1,3-DICHLOROBENZENE	UG/KG	BNA	340	U	350	U	400	U	340	U	400	U
1,4-DICHLOROBENZENE	UG/KG	BNA			350	U	400	U	340	U	400	U
2,4,5-TRICHLOROPHENOL	UG/KG	BNA	1600	U	1700	U	1900	U	1600	U	1900	U
2,4,6-TRICHLOROPHENOL	UG/KG	BNA	340	U	350	U	400	U	340	U	400	U
2,4-DICHLOROPHENOL	UG/KG	BNA	340	U	350	U	400	U	340	U	400	U
2,4-DIMETHYLPHENOL	UG/KG	BNA	340	U	350	U	400	U	340	U	400	U
2,4-DINITROPHENOL	UG/KG	BNA	1600	U	1700	U	1900	U	1600	U	1900	U
2,4-DINITROTOLUENE	UG/KG	BNA	340	U	350	U	400	U	340	U	400	U
2,6-DINITROTOLUENE	UG/KG	BNA	340	U	350	U	400	U	340	U	400	U
2-CHLORONAPHTHALENE	UG/KG	BNA	340	U	350	U	400	U	340	U	400	U
2-CHLOROPHENOL	UG/KG	BNA	340	U	350	U	400	U	340	U	400	U
2-METHYLNAPHTHALENE	UG/KG	BNA	340	U	350	U	2900		340	U	400	U
2-METHYLPHENOL	UG/KG	BNA	340	U	350	U	150	J	340	U	400	U
2-NITROANILINE	UG/KG	BNA	1600	U	1700	U	1900	U	1600	U	1900	U
2-NITROPHENOL	UG/KG	BNA	340	U	350	U	400	U	340	U	400	U
3,3'-DICHLOROBENZIDINE	UG/KG	BNA	680	U	690	U	800	U	680	U	800	U
3-NITROANILINE	UG/KG	BNA	1600	U	1700	U	1900	UJ	1600	U	1900	U
4,6-DINITRO-2-METHYLPHENOL	UG/KG	BNA	1600	U	1700	U	1900	U	1600	U	1900	U
4-BROMOPHENYL-PHENYLETHER	UG/KG	BNA	340	U	350	U	400	U	340	U	400	U
4-CHLORO-3-METHYLPHENOL	UG/KG	BNA	340	U	350	U	400	U	340	U	400	U
4-CHLOROANILINE	UG/KG	BNA	340	U	350	U	400	U	340	U	400	U
4-CHLOROPHENYL-PHENYLETHER	UG/KG	BNA	340	U	350	U	400	U	340	U	400	U
4-METHYLPHENOL	UG/KG	BNA	340	U	350	U	200	J	340	U	400	U
4-NITROANILINE	UG/KG	BNA	1600	U	1700	U	1900	U	1600	U	1900	U
4-NITROPHENOL	UG/KG	BNA	1600	U	1700	U	1900	U	1600	U	1900	U
ACENAPHTHENE	UG/KG	BNA	340	U	350	U	400	U	340	U	400	U
ACENAPHTHYLENE	UG/KG	BNA	340	U	350	U	400	U	340	U	400	U
ANTHRACENE	UG/KG	BNA	340	U	350	U	400	U	340	U	400	U
BENZO(A)ANTHRACENE	UG/KG	BNA	340	U	350	U	400	U	340	U	400	U
BENZO(A)PYRENE	UG/KG	BNA	340	U	350	U	400	U	340	U	400	U
BENZO(B)FLUORANTHENE	UG/KG	BNA	340	U	350	U	400	U	340	U	400	U
BENZO(G,H,I)PERYLENE	UG/KG	BNA	340	U	350	U	400	U	340	U	400	U
BENZO(K)FLUORANTHENE	UG/KG	BNA	340	U	350	U	400	U	340	U	400	U
BENZOIC ACID	UG/KG	BNA	1600	U	1700	U	1900	U	60	J	1900	U
BENZYL ALCOHOL	UG/KG	BNA	340	U	350	U	400	U	340	U	400	U
BIS(2-CHLOROETHOXY)METHANE	UG/KG	BNA	340	U	350	U	400	U	340	U	400	U
BIS(2-CHLOROETHYL)ETHER	UG/KG	BNA	340	U	350	U	400	U	340	U	400	U
BIS(2-CHLOROISOPROPYL)ETHER	UG/KG	BNA	340	U	350	U	400	U	340	U	400	U
BIS(2-ETHYLHEXYL)PHTHALATE	UG/KG	BNA	340	U	350	U	96	J	340	U	400	U
BUTYLBENZYLPHTHALATE	UG/KG	BNA	340	U	350	U	400	U	340	U	400	U
CHRYSENE	UG/KG	BNA	340	U	350	U	400	U	340	U	400	U
DI-N-BUTYLPHTHALATE	UG/KG	BNA	340	U	350	U	400	U	340	U	400	U
DI-N-OCTYLPHTHALATE	UG/KG	BNA	340	U	350	U	400	U	340	U	400	U
DIBENZ(A,H)ANTHRACENE	UG/KG	BNA	340	U	350	U	400	U	340	U	400	U
DIBENZOFURAN	UG/KG	BNA	340	U	350	U	400	U	340	U	400	U
DIETHYLPHTHALATE	UG/KG	BNA	340	U	350	U	400	U	340	U	400	U
DIMETHYLPHTHALATE	UG/KG	BNA	340	U	350	U	400	U	340	U	400	U
FLUORANTHENE	UG/KG	BNA	340	U	350	U	400	U	340	U	400	U
FLUORENE	UG/KG	BNA	340	U	350	U	400	U	340	U	400	U

NAVSTA-SAN DIEGO
SITE 2 SOILS

		SAMPLE NUMBER:	NS2-BH08-S01-5		NS2-BH08-S01-5-FD		NS2-BH08-S03-15		NS2-BH09-S01-5		NS2-BH09-S02-10	
		SAMPLING DATE:	02/06/91		02/06/91		02/06/91		02/07/91		02/07/91	
		BORING:	BH08		BH08		BH08		BH09		BH09	
		SITE:	NS2		NS2		NS2		NS2		NS2	
		DEPTH:	5		5-FD		15		5		10	
COMPOUND NAME	UNITS	TEST CODE	RESULT	QUALIFIER	RESULT	QUALIFIER	RESULT	QUALIFIER	RESULT	QUALIFIER	RESULT	QUALIFIER
HEXACHLOROBENZENE	UG/KG	BNA	340	U	350	U	400	U	340	U	400	U
HEXACHLOROBUTADIENE	UG/KG	BNA	340	U	350	U	400	U	340	U	400	U
HEXACHLOROCYCLOPENTADIENE	UG/KG	BNA	340	U	350	U	400	U	340	U	400	U
HEXACHLOROETHANE	UG/KG	BNA	340	U	350	U	400	U	340	U	400	U
INDENO(1,2,3-C,D)PYRENE	UG/KG	BNA	340	U	350	U	400	U	340	U	400	U
ISOPHORONE	UG/KG	BNA	340	U	350	U	400	U	340	U	400	U
N-NITROSO-DI-N-PROPYLAMINE	UG/KG	BNA	340	U	350	U	400	U	340	U	400	U
N-NITROSODIPHENYLAMINE (1)	UG/KG	BNA	340	U	350	U	400	U	340	U	400	U
NAPHTHALENE	UG/KG	BNA	340	U	350	U	2000		340	U	400	U
NITROBENZENE	UG/KG	BNA	340	U	350	U	400	U	340	U	400	U
PENTACHLOROPHENOL	UG/KG	BNA	1600	U	1700	U	1900	U	1600	U	1900	U
PHENANTHRENE	UG/KG	BNA	340	U	350	U	400	U	340	U	400	U
PHENOL	UG/KG	BNA	340	U	350	U	180	J	340	U	400	U
PYRENE	UG/KG	BNA	340	U	350	U	400	U	340	U	400	U
ANTIMONY	MG/KG	CAC METALS	3.8	U	3.8	U	4.4	UJ	3.7	U	7.0	B
ARSENIC	MG/KG	CAC METALS	0.53	B	1.7	B	0.57	B	0.55	B	2.6	
BARIUM	MG/KG	CAC METALS	26.0	B	66.2		27.8	B	25.2	B	60.4	
BERYLLIUM	MG/KG	CAC METALS	0.53	B	1.1		0.33	B	0.19	U	1.0	B
CADMIUM	MG/KG	CAC METALS	0.80	U	0.79	U	0.93	U	0.77	U	0.94	U
CHROMIUM	MG/KG	CAC METALS	4.2		10.6		4.7		4.3		12.9	
COBALT	MG/KG	CAC METALS	2.1	B	5.0	B	2.5	B	1.7	B	6.3	B
COPPER	MG/KG	CAC METALS	3.2	U	8.2	U	13.2	U	25.3	U	15.3	U
LEAD	MG/KG	CAC METALS	0.94	U	2.8	U	2.3	U	28.9		2.6	U
MERCURY	MG/KG	CAC METALS	0.15	U	0.16	U	0.18	U	0.15	U	0.18	U
MOLYBDENUM	MG/KG	CAC METALS	1.4	U	1.4	U	1.6	U	1.3	U	1.6	U
NICKEL	MG/KG	CAC METALS	1.8	U	4.3	B	2.1	U	2.5	B	4.7	B
SELENIUM	MG/KG	CAC METALS	0.24	U	0.19	U	0.23	U	0.24	U	0.26	U
SILVER	MG/KG	CAC METALS	0.67	U	1.3	U	1.0	U	0.66	U	1.7	U
THALLIUM	MG/KG	CAC METALS	0.20	U	0.19	U	0.23	U	0.20	U	0.24	U
VANADIUM	MG/KG	CAC METALS	20.7		40.7		20.6		11.6		34.2	
ZINC	MG/KG	CAC METALS	10.3	U	29.0	U	16.8	U	65.1	U	41.9	
ANTIMONY	UG/KG	CAC METALS										
ARSENIC	UG/KG	CAC METALS										
BARIUM	UG/KG	CAC METALS										
BERYLLIUM	UG/KG	CAC METALS										
CADMIUM	UG/KG	CAC METALS										
CHROMIUM	UG/KG	CAC METALS										
COBALT	UG/KG	CAC METALS										
COPPER	UG/KG	CAC METALS										
LEAD	UG/KG	CAC METALS										
MERCURY	UG/KG	CAC METALS										
MOLYBDENUM	UG/KG	CAC METALS										
NICKEL	UG/KG	CAC METALS										
SELENIUM	UG/KG	CAC METALS										
SILVER	UG/KG	CAC METALS										
THALLIUM	UG/KG	CAC METALS										
VANADIUM	UG/KG	CAC METALS										
ZINC	UG/KG	CAC METALS										
CAC WET EXTRACTION	DATE	CAC WET EX										
COPPER	MG/L	CAC WET EX										
LEAD	MG/L	CAC WET EX										

NAVSTA-SAN DIEGO
SITE 2 SOILS

		SAMPLE NUMBER:	NS2-BH08-S01-5		NS2-BH08-S01-5-FD		NS2-BH08-S03-15		NS2-BH09-S01-5		NS2-BH09-S02-10	
		SAMPLING DATE:	02/06/91		02/06/91		02/06/91		02/07/91		02/07/91	
		BORING:	BH08		BH08		BH08		BH09		BH09	
		SITE:	NS2		NS2		NS2		NS2		NS2	
		DEPTH:	5		5-FD		15		5		10	
COMPOUND NAME	UNITS	TEST CODE	RESULT	QUALIFIER	RESULT	QUALIFIER	RESULT	QUALIFIER	RESULT	QUALIFIER	RESULT	QUALIFIER
MERCURY	MG/L	CAC WET EX										
TOTAL CYANIDE	MG/KG	CN					1.0	U	1	U	1	U
TOTAL CYANIDE	MG/L	CN										
4,4'-DDD	UG/KG	PEST / PCB	16	U	17	U	19	UJ	16	U	19	U
4,4'-DDE	UG/KG	PEST / PCB	16	U	17	U	19	UJ	16	U	19	U
4,4'-DDT	UG/KG	PEST / PCB	16	U	17	U	19	UJ	16	U	19	U
ALDRIN	UG/KG	PEST / PCB	8.2	U	8.4	U	9.6	UJ	8.2	U	9.6	U
ALPHA CHLORDANE	UG/KG	PEST / PCB							82	U	96	U
ALPHA-BHC	UG/KG	PEST / PCB	8.2	U	8.4	U	9.6	UJ	8.2	U	9.6	U
ALPHA-CHLORDANE	UG/KG	PEST / PCB										
BETA-BHC	UG/KG	PEST / PCB	8.2	U	8.4	U	9.6	UJ	8.2	U	9.6	U
CHLORDANE	UG/KG	PEST / PCB	82	U	84	U	96	UJ				
DELTA-BHC	UG/KG	PEST / PCB	8.2	U	8.4	U	9.6	UJ	8.2	U	9.6	U
DIELDRIN	UG/KG	PEST / PCB	16	U	17	U	19	UJ	16	U	19	U
ENDOSULFAN I	UG/KG	PEST / PCB	8.2	U	8.4	U	9.6	UJ	8.2	U	9.6	U
ENDOSULFAN II	UG/KG	PEST / PCB	16	U	17	U	19	UJ	16	U	19	U
ENDOSULFAN SULFATE	UG/KG	PEST / PCB	16	U	17	U	19	UJ	16	U	19	U
ENDRIN	UG/KG	PEST / PCB	16	U	17	U	19	UJ	16	U	19	U
ENDRIN KETONE	UG/KG	PEST / PCB	16	U	17	U	19	UJ	16	U	19	U
GAMMA CHLORDANE	UG/KG	PEST / PCB							82	U	96	U
GAMMA-BHC (LINDANE)	UG/KG	PEST / PCB	8.2	U	8.4	U	9.6	UJ	8.2	U	9.6	U
GAMMA-CHLORDANE	UG/KG	PEST / PCB										
HEPTACHLOR	UG/KG	PEST / PCB	8.2	U	8.4	U	9.6	UJ	8.2	U	9.6	U
HEPTACHLOR EPOXIDE	UG/KG	PEST / PCB	8.2	U	8.4	U	9.6	UJ	8.2	U	9.6	U
METHOXYCHLOR	UG/KG	PEST / PCB	82	U	84	U	96	UJ	82	U	96	U
PCB-1016	UG/KG	PEST / PCB	82	U	84	U	96	UJ	82	U	96	U
PCB-1221	UG/KG	PEST / PCB	82	U	84	U	96	UJ	82	U	96	U
PCB-1232	UG/KG	PEST / PCB	82	U	84	U	96	UJ	82	U	96	U
PCB-1242	UG/KG	PEST / PCB	82	U	84	U	96	UJ	82	U	96	U
PCB-1248	UG/KG	PEST / PCB	82	U	84	U	96	UJ	82	U	96	U
PCB-1254	UG/KG	PEST / PCB	160	U	170	U	190	UJ	160	U	190	U
PCB-1260	UG/KG	PEST / PCB	160	U	170	U	190	UJ	160	U	190	U
TOXAPHENE	UG/KG	PEST / PCB	160	U	170	U	190	UJ	160	U	190	U
DIESEL	MG/KG	TPHC	10	U	10	U	10	U	17	Z	10	U
HYDRAULIC OIL	MG/KG	TPHC	10	U	10	U	10	U	134	Z	71	Z
MOTOR OIL	MG/KG	TPHC	10	U	10	U	10	U	164		57	
STODDARD	MG/KG	TPHC	10	U	10	U	185		10	U	10	U
DIESEL	UG/KG	TPHC										
HYDRAULIC OIL	UG/KG	TPHC										
MOTOR OIL	UG/KG	TPHC										
STODDARD	UG/KG	TPHC										
1,1,1-TRICHLOROETHANE	UG/KG	VOA	5	U	5	U	790	U	5	U	6	U
1,1,2,2-TETRACHLOROETHANE	UG/KG	VOA	5	U	5	U	790	U	5	U	6	U
1,1,2-TRICHLOROETHANE	UG/KG	VOA	5	U	5	U	790	U	5	U	6	U
1,1-DICHLOROETHANE	UG/KG	VOA	5	U	5	U	790	U	5	U	6	U
1,1-DICHLOROETHENE	UG/KG	VOA	5	U	5	U	790	U	5	U	6	U
1,2-DICHLOROETHANE	UG/KG	VOA	5	U	5	U	790	U	5	U	6	U
1,2-DICHLOROETHENE (TOTAL)	UG/KG	VOA	5	U	5	U	790	U	5	U	6	U
1,2-DICHLOROPROPANE	UG/KG	VOA	5	U	5	U	790	U	5	U	6	U
2-BUTANONE	UG/KG	VOA	10	U	10	U	1600	U	10	U	13	U
2-HEXANONE	UG/KG	VOA	10	U	10	U	1600	U	10	U	13	U

NAVSTA-SAN DIEGO
SITE 2 SOILS

		SAMPLE NUMBER:	NS2-BH08-S01-5		NS2-BH08-S01-5-FD		NS2-BH08-S03-15		NS2-BH09-S01-5		NS2-BH09-S02-10	
		SAMPLING DATE:	02/06/91		02/06/91		02/06/91		02/07/91		02/07/91	
		BORING:	BH08		BH08		BH08		BH09		BH09	
		SITE:	NS2		NS2		NS2		NS2		NS2	
		DEPTH:	5		5-FD		15		5		10	
COMPOUND NAME	UNITS	TEST CODE	RESULT	QUALIFIER	RESULT	QUALIFIER	RESULT	QUALIFIER	RESULT	QUALIFIER	RESULT	QUALIFIER
4-METHYL-2-PENTANONE	UG/KG	VOA	10	U	10	U	1600	U	10	U	13	U
ACETONE	UG/KG	VOA	34		31		2200	U	10	U	17	U
BENZENE	UG/KG	VOA	5	U	5	U	790	U	5	U	6	U
BROMODICHLOROMETHANE	UG/KG	VOA	5	U	5	U	790	U	5	U	6	U
BROMOFORM	UG/KG	VOA	5	U	5	U	790	U	5	U	6	U
BROMOMETHANE	UG/KG	VOA	10	U	10	U	1600	U	10	U	13	U
CARBON DISULFIDE	UG/KG	VOA	5	U	5	U	790	U	5	U	6	U
CARBON TETRACHLORIDE	UG/KG	VOA	5	U	5	U	790	U	5	U	6	U
CHLOROBENZENE	UG/KG	VOA	5	U	5	U	790	U	5	U	6	U
CHLOROETHANE	UG/KG	VOA	10	U	10	U	1600	U	10	U	13	U
CHLOROFORM	UG/KG	VOA	5	U	5	U	790	U	5	U	6	U
CHLOROMETHANE	UG/KG	VOA	10	U	10	U	1600	U	10	U	13	U
CIS-1,3-DICHLOROPROPENE	UG/KG	VOA	5	U	5	U	790	U	5	U	6	U
DIBROMOCHLOROMETHANE	UG/KG	VOA	5	U	5	U	790	U	5	U	6	U
ETHYLBENZENE	UG/KG	VOA	5	U	5	U	790	U	5	U	6	U
METHYLENE CHLORIDE	UG/KG	VOA	5	U	5	U	990	U	12	U	15	U
STYRENE	UG/KG	VOA	5	U	5	U	790	U	5	U	6	U
TETRACHLOROETHENE	UG/KG	VOA	5	U	5	U	790	U	5	U	6	U
TOLUENE	UG/KG	VOA	13		5	U	790	U	3	J	2	J
TRANS-1,3-DICHLOROPROPENE	UG/KG	VOA	5	U	5	U	790	U	5	U	6	U
TRICHLOROETHENE	UG/KG	VOA	5	U	5	U	790	U	5	U	6	U
VINYL ACETATE	UG/KG	VOA	10	U	10	U	1600	U	10	U	13	U
VINYL CHLORIDE	UG/KG	VOA	10	U	10	U	1600	U	10	U	13	U
XYLENES (TOTAL)	UG/KG	VOA	5	U	5	U	790	U	5	U	6	U

NAVSTA-SAN DIEGO
SITE 2 SOILS

		SAMPLE NUMBER:	NS2-BH10-S01-10		NS2-BH10-S02-15		NS2-BH10-S03-10-FD		NS2-BH11-S01-5		NS2-BH11-S02-10	
		SAMPLING DATE:	02/07/91		02/07/91		02/07/91		02/05/91		02/05/91	
		BORING:	BH10		BH10		BH10		BH11		BH11	
		SITE:	NS2		NS2		NS2		NS2		NS2	
		DEPTH:	10		15		10-FD		5		10	
COMPOUND NAME	UNITS	TEST CODE	RESULT	QUALIFIER	RESULT	QUALIFIER	RESULT	QUALIFIER	RESULT	QUALIFIER	RESULT	QUALIFIER
1,2,4-TRICHLOROBENZENE	UG/KG	BNA	350	U	410	U	410	U	350	U	400	U
1,2-DICHLOROBENZENE	UG/KG	BNA	350	U	410	U	410	U	350	U	400	U
1,3-DICHLOROBENZENE	UG/KG	BNA	350	U	410	U	410	U	350	U	400	U
1,4-DICHLOROBENZENE	UG/KG	BNA	350	U	410	U	410	U	350	U	400	U
2,4,5-TRICHLOROPHENOL	UG/KG	BNA	1700	U	2000	U	2000	U	1700	U	1900	U
2,4,6-TRICHLOROPHENOL	UG/KG	BNA	350	U	410	U	410	U	350	U	400	U
2,4-DICHLOROPHENOL	UG/KG	BNA	350	U	410	U	410	U	350	U	400	U
2,4-DIMETHYLPHENOL	UG/KG	BNA	350	U	410	U	410	U	350	U	400	U
2,4-DINITROPHENOL	UG/KG	BNA	1700	U	2000	U	2000	U	1700	U	1900	U
2,4-DINITROTOLUENE	UG/KG	BNA	350	U	410	U	410	U	350	U	400	U
2,6-DINITROTOLUENE	UG/KG	BNA	350	U	410	U	410	U	350	U	400	U
2-CHLORONAPHTHALENE	UG/KG	BNA	350	U	410	U	410	U	350	U	400	U
2-CHLOROPHENOL	UG/KG	BNA	350	U	410	U	410	U	350	U	400	U
2-METHYLNAPHTHALENE	UG/KG	BNA	350	U	410	U	410	U	350	U	400	U
2-METHYLPHENOL	UG/KG	BNA	350	U	410	U	410	U	350	U	400	U
2-NITROANILINE	UG/KG	BNA	1700	U	2000	U	2000	U	1700	U	1900	U
2-NITROPHENOL	UG/KG	BNA	350	U	410	U	410	U	350	U	400	U
3,3'-DICHLOROBENZIDINE	UG/KG	BNA	710	U	820	U	820	U	700	U	800	U
3-NITROANILINE	UG/KG	BNA	1700	U	2000	U	2000	U	1700	U	1900	U
4,6-DINITRO-2-METHYLPHENOL	UG/KG	BNA	1700	U	2000	U	2000	U	1700	U	1900	U
4-BROMOPHENYL-PHENYLETHER	UG/KG	BNA	350	U	410	U	410	U	350	U	400	U
4-CHLORO-3-METHYLPHENOL	UG/KG	BNA	350	U	410	U	410	U	350	U	400	U
4-CHLOROANILINE	UG/KG	BNA	350	U	410	U	410	U	350	U	400	U
4-CHLOROPHENYL-PHENYLETHER	UG/KG	BNA	350	U	410	U	410	U	350	U	400	U
4-METHYLPHENOL	UG/KG	BNA	350	U	410	U	410	U	350	U	400	U
4-NITROANILINE	UG/KG	BNA	1700	U	2000	U	2000	U	1700	U	1900	U
4-NITROPHENOL	UG/KG	BNA	1700	U	2000	U	2000	U	1700	U	1900	U
ACENAPHTHENE	UG/KG	BNA	350	U	410	U	410	U	350	U	400	U
ACENAPHTHYLENE	UG/KG	BNA	350	U	410	U	410	U	350	U	400	U
ANTHRACENE	UG/KG	BNA	350	U	410	U	410	U	350	U	400	U
BENZO(A)ANTHRACENE	UG/KG	BNA	350	U	410	U	410	U	350	U	400	U
BENZO(A)PYRENE	UG/KG	BNA	350	U	410	U	410	U	350	U	400	U
BENZO(B)FLUORANTHENE	UG/KG	BNA	350	U	410	U	410	U	350	U	400	U
BENZO(G,H,I)PERYLENE	UG/KG	BNA	350	U	410	U	410	U	350	U	400	U
BENZO(K)FLUORANTHENE	UG/KG	BNA	350	U	410	U	410	U	350	U	400	U
BENZOIC ACID	UG/KG	BNA	1700	U	2000	U	2000	U	1700	U	1900	U
BENZYL ALCOHOL	UG/KG	BNA	350	U	410	U	410	U	350	U	400	U
BIS(2-CHLOROETHOXY)METHANE	UG/KG	BNA	350	U	410	U	410	U	350	U	400	U
BIS(2-CHLOROETHYL)ETHER	UG/KG	BNA	350	U	410	U	410	U	350	U	400	U
BIS(2-CHLOROISOPROPYL)ETHER	UG/KG	BNA	350	U	410	U	410	U	350	U	400	U
BIS(2-ETHYLHEXYL)PHTHALATE	UG/KG	BNA	350	U	410	U	410	U	350	U	400	U
BUTYLBENZYLPHTHALATE	UG/KG	BNA	350	U	410	U	410	U	350	U	400	U
CHRYSENE	UG/KG	BNA	350	U	410	U	410	U	350	U	400	U
DI-N-BUTYLPHTHALATE	UG/KG	BNA	350	U	410	U	410	U	350	U	400	U
DI-N-OCTYLPHTHALATE	UG/KG	BNA	350	U	410	U	410	U	350	U	400	U
DIBENZ(A,H)ANTHRACENE	UG/KG	BNA	350	U	410	U	410	U	350	U	400	U
DIBENZOFURAN	UG/KG	BNA	350	U	410	U	410	U	350	U	400	U
DIETHYLPHTHALATE	UG/KG	BNA	350	U	410	U	410	U	350	U	400	U
DIMETHYLPHTHALATE	UG/KG	BNA	350	U	410	U	410	U	350	U	400	U
FLUORANTHENE	UG/KG	BNA	350	U	410	U	410	U	350	U	400	U
FLUORENE	UG/KG	BNA	350	U	410	U	410	U	350	U	400	U

NAVSTA-SAN DIEGO
SITE 2 SOILS

		SAMPLE NUMBER:	NS2-BH10-S01-10		NS2-BH10-S02-15		NS2-BH10-S03-10-FD		NS2-BH11-S01-5		NS2-BH11-S02-10	
		SAMPLING DATE:	02/07/91		02/07/91		02/07/91		02/05/91		02/05/91	
		BORING:	BH10		BH10		BH10		BH11		BH11	
		SITE:	NS2		NS2		NS2		NS2		NS2	
		DEPTH:	10		15		10-FD		5		10	
COMPOUND NAME	UNITS	TEST CODE	RESULT	QUALIFIER	RESULT	QUALIFIER	RESULT	QUALIFIER	RESULT	QUALIFIER	RESULT	QUALIFIER
HEXACHLOROBENZENE	UG/KG	BNA	350	U	410	U	410	U	350	U	400	U
HEXACHLOROBUTADIENE	UG/KG	BNA	350	U	410	U	410	U	350	U	400	U
HEXACHLOROCYCLOPENTADIENE	UG/KG	BNA	350	U	410	U	410	U	350	U	400	U
HEXACHLOROETHANE	UG/KG	BNA	350	U	410	U	410	U	350	U	400	U
INDENO(1,2,3-C,D)PYRENE	UG/KG	BNA	350	U	410	U	410	U	350	U	400	U
ISOPHORONE	UG/KG	BNA	350	U	410	U	410	U	350	U	400	U
N-NITROSO-DI-N-PROPYLAMINE	UG/KG	BNA	350	U	410	U	410	U	350	U	400	U
N-NITROSODIPHENYLAMINE (1)	UG/KG	BNA	350	U	410	U	410	U	350	U	400	U
NAPHTHALENE	UG/KG	BNA	350	U	410	U	410	U	350	U	400	U
NITROBENZENE	UG/KG	BNA	350	U	410	U	410	U	350	U	400	U
PENTACHLOROPHENOL	UG/KG	BNA	1700	U	2000	U	2000	U	1700	U	1900	U
PHENANTHRENE	UG/KG	BNA	350	U	410	U	410	U	350	U	400	U
PHENOL	UG/KG	BNA	350	U	410	U	410	U	350	U	400	U
PYRENE	UG/KG	BNA	350	U	410	U	410	U	350	U	400	U
ANTIMONY	MG/KG	CAC METALS	4.0	U	4.5	U	4.6	U	3.9	U	4.8	B
ARSENIC	MG/KG	CAC METALS	1.5	B	1.9	B	2.2	B	0.99	B	1.8	B
BARIUM	MG/KG	CAC METALS	18.9	B	75.0		26.7	B	34.7	B	29.5	B
BERYLLIUM	MG/KG	CAC METALS	0.26	B	0.73	B	0.47	B	0.42	B	0.48	B
CADMIUM	MG/KG	CAC METALS	0.85	U	0.94	U	0.96	U	0.81	U	0.94	U
CHROMIUM	MG/KG	CAC METALS	5.0		8.3		4.6		5.4		5.0	
COBALT	MG/KG	CAC METALS	2.7	B	5.2	B	3.2	B	2.6	B	4.4	B
COPPER	MG/KG	CAC METALS	10.5	U	53.9		18.7	U	5.7	U	5.5	U
LEAD	MG/KG	CAC METALS	2.1	U	1.9	U	1.5	U	1.9	U	1.3	U
MERCURY	MG/KG	CAC METALS	0.16	U	0.19	U	0.19	U	0.05	U	0.06	U
MOLYBDENUM	MG/KG	CAC METALS	1.5	U	1.7	U	1.7	U	1.4	U	1.7	U
NICKEL	MG/KG	CAC METALS	1.9	U	3.8	B	2.2	U	3.6	U	3.0	U
SELENIUM	MG/KG	CAC METALS	0.23	U	0.24	U	0.24	U	0.20	U	0.23	U
SILVER	MG/KG	CAC METALS	0.70	U	1.1	U	1.6	U	1.2	U	1.4	U
THALLIUM	MG/KG	CAC METALS	0.21	U	0.24	U	0.24	U	0.39	U	0.46	U
VANADIUM	MG/KG	CAC METALS	15.8		33.9		18.0		22.8		19.6	
ZINC	MG/KG	CAC METALS	12.4	U	25.4	U	13.6	U	16.5	U	21.2	U
ANTIMONY	UG/KG	CAC METALS										
ARSENIC	UG/KG	CAC METALS										
BARIUM	UG/KG	CAC METALS										
BERYLLIUM	UG/KG	CAC METALS										
CADMIUM	UG/KG	CAC METALS										
CHROMIUM	UG/KG	CAC METALS										
COBALT	UG/KG	CAC METALS										
COPPER	UG/KG	CAC METALS										
LEAD	UG/KG	CAC METALS										
MERCURY	UG/KG	CAC METALS										
MOLYBDENUM	UG/KG	CAC METALS										
NICKEL	UG/KG	CAC METALS										
SELENIUM	UG/KG	CAC METALS										
SILVER	UG/KG	CAC METALS										
THALLIUM	UG/KG	CAC METALS										
VANADIUM	UG/KG	CAC METALS										
ZINC	UG/KG	CAC METALS										
CAC WET EXTRACTION	DATE	CAC WET EX										
COPPER	MG/L	CAC WET EX										
LEAD	MG/L	CAC WET EX										

NAVSTA-SAN DIEGO
SITE 2 SOILS

		SAMPLE NUMBER:	NS2-BH10-S01-10		NS2-BH10-S02-15		NS2-BH10-S03-10-FD		NS2-BH11-S01-5		NS2-BH11-S02-10	
		SAMPLING DATE:	02/07/91		02/07/91		02/07/91		02/05/91		02/05/91	
		BORING:	BH10		BH10		BH10		BH11		BH11	
		SITE:	NS2		NS2		NS2		NS2		NS2	
		DEPTH:	10		15		10-FD		5		10	
COMPOUND NAME	UNITS	TEST CODE	RESULT	QUALIFIER	RESULT	QUALIFIER	RESULT	QUALIFIER	RESULT	QUALIFIER	RESULT	QUALIFIER
MERCURY	MG/L	CAC WET EX										
TOTAL CYANIDE	MG/KG	CN	1	U	1	U	1	U	1	UJ	1	UJ
TOTAL CYANIDE	MG/L	CN										
4,4'-DDD	UG/KG	PEST / PCB	17	U	20	U	20	U	17	U	19	U
4,4'-DDE	UG/KG	PEST / PCB	17	U	20	U	20	U	17	U	19	U
4,4'-DDT	UG/KG	PEST / PCB	17	U	20	U	20	U	17	U	19	U
ALDRIN	UG/KG	PEST / PCB	8.6	U	10	U	9.9	U	8.5	U	9.6	U
ALPHA CHLORDANE	UG/KG	PEST / PCB	86	U	100	U	99	U				
ALPHA-BHC	UG/KG	PEST / PCB	8.6	U	10	U	9.9	U	8.5	U	9.6	U
ALPHA-CHLORDANE	UG/KG	PEST / PCB							85	U	96	U
BETA-BHC	UG/KG	PEST / PCB	8.6	U	10	U	9.9	U	8.5	U	9.6	U
CHLORDANE	UG/KG	PEST / PCB										
DELTA-BHC	UG/KG	PEST / PCB	8.6	U	10	U	9.9	U	8.5	U	9.6	U
DIELDRIN	UG/KG	PEST / PCB	17	U	20	U	20	U	17	U	19	U
ENDOSULFAN I	UG/KG	PEST / PCB	8.6	U	10	U	9.9	U	8.5	U	9.6	U
ENDOSULFAN II	UG/KG	PEST / PCB	17	U	20	U	20	U	17	U	19	U
ENDOSULFAN SULFATE	UG/KG	PEST / PCB	17	U	20	U	20	U	17	U	19	U
ENDRIN	UG/KG	PEST / PCB	17	U	20	U	20	U	17	U	19	U
ENDRIN KETONE	UG/KG	PEST / PCB	17	U	20	U	20	U	17	U	19	U
GAMMA CHLORDANE	UG/KG	PEST / PCB	86	U	100	U	99	U				
GAMMA-BHC (LINDANE)	UG/KG	PEST / PCB	8.6	U	10	U	9.9	U	8.5	U	9.6	U
GAMMA-CHLORDANE	UG/KG	PEST / PCB							85	U	96	U
HEPTACHLOR	UG/KG	PEST / PCB	8.6	U	10	U	9.9	U	8.5	U	9.6	U
HEPTACHLOR EPOXIDE	UG/KG	PEST / PCB	8.6	U	10	U	9.9	U	8.5	U	9.6	U
METHOXYCHLOR	UG/KG	PEST / PCB	86	U	100	U	99	U	85	U	96	U
PCB-1016	UG/KG	PEST / PCB	86	U	100	U	99	U	85	U	96	U
PCB-1221	UG/KG	PEST / PCB	86	U	100	U	99	U	85	U	96	U
PCB-1232	UG/KG	PEST / PCB	86	U	100	U	99	U	85	U	96	U
PCB-1242	UG/KG	PEST / PCB	86	U	100	U	99	U	85	U	96	U
PCB-1248	UG/KG	PEST / PCB	86	U	100	U	99	U	85	U	96	U
PCB-1254	UG/KG	PEST / PCB	170	U	200	U	200	U	170	U	190	U
PCB-1260	UG/KG	PEST / PCB	170	U	200	U	200	U	170	U	190	U
TOXAPHENE	UG/KG	PEST / PCB	170	U	200	U	200	U	170	U	190	U
DIESEL	MG/KG	TPHC	10	U	10	U	10	U	14		14	
HYDRAULIC OIL	MG/KG	TPHC	18	Z	25	Z	16	Z	10	U	10	U
MOTOR OIL	MG/KG	TPHC	27		27		22		10	U	10	U
STODDARD	MG/KG	TPHC	10	U	10	U	10	U	10	U	10	U
DIESEL	UG/KG	TPHC										
HYDRAULIC OIL	UG/KG	TPHC										
MOTOR OIL	UG/KG	TPHC										
STODDARD	UG/KG	TPHC										
1,1,1-TRICHLOROETHANE	UG/KG	VOA	5	U	7	U	5	U	10	U	6	U
1,1,2,2-TETRACHLOROETHANE	UG/KG	VOA	5	U	7	U	5	U	10	U	6	U
1,1,2-TRICHLOROETHANE	UG/KG	VOA	5	U	7	U	5	U	10	U	6	U
1,1-DICHLOROETHANE	UG/KG	VOA	5	U	7	U	5	U	10	U	6	U
1,1-DICHLOROETHENE	UG/KG	VOA	5	U	7	U	5	U	10	U	6	U
1,2-DICHLOROETHANE	UG/KG	VOA	5	U	7	U	5	U	10	U	6	U
1,2-DICHLOROETHENE (TOTAL)	UG/KG	VOA	5	U	7	U	5	U	10	U	6	U
1,2-DICHLOROPROPANE	UG/KG	VOA	5	U	7	U	5	U	10	U	6	U
2-BUTANONE	UG/KG	VOA	11	U	13	U	11	U	3	J	2	J
2-HEXANONE	UG/KG	VOA	11	U	13	U	11	U	21	U	12	U

NAVSTA-SAN DIEGO
SITE 2 SOILS

		SAMPLE NUMBER:	NS2-BH10-S01-10		NS2-BH10-S02-15		NS2-BH10-S03-10-FD		NS2-BH11-S01-5		NS2-BH11-S02-10	
		SAMPLING DATE:	02/07/91		02/07/91		02/07/91		02/05/91		02/05/91	
		BORING:	BH10		BH10		BH10		BH11		BH11	
		SITE:	NS2		NS2		NS2		NS2		NS2	
		DEPTH:	10		15		10-FD		5		10	
COMPOUND NAME	UNITS	TEST CODE	RESULT	QUALIFIER	RESULT	QUALIFIER	RESULT	QUALIFIER	RESULT	QUALIFIER	RESULT	QUALIFIER
4-METHYL-2-PENTANONE	UG/KG	VOA	11	U	13	U	11	U	21	U	12	U
ACETONE	UG/KG	VOA	13	U	19	U	11	U	320	B	29	U
BENZENE	UG/KG	VOA	5	U	7	U	5	U	10	U	6	U
BROMODICHLOROMETHANE	UG/KG	VOA	5	U	7	U	5	U	10	U	6	U
BROMOFORM	UG/KG	VOA	5	U	7	U	5	U	10	U	6	U
BROMOMETHANE	UG/KG	VOA	11	U	13	U	11	U	21	U	12	U
CARBON DISULFIDE	UG/KG	VOA	5	U	7	U	5	U	10	U	6	U
CARBON TETRACHLORIDE	UG/KG	VOA	5	U	7	U	5	U	10	U	6	U
CHLOROBENZENE	UG/KG	VOA	5	U	7	U	5	U	10	U	6	U
CHLOROETHANE	UG/KG	VOA	11	U	13	U	11	U	21	U	12	U
CHLOROFORM	UG/KG	VOA	5	U	7	U	5	U	10	U	6	U
CHLOROMETHANE	UG/KG	VOA	11	U	13	U	11	U	21	U	12	U
CIS-1,3-DICHLOROPROPENE	UG/KG	VOA	5	U	7	U	5	U	10	U	6	U
DIBROMOCHLOROMETHANE	UG/KG	VOA	5	U	7	U	5	U	10	U	6	U
ETHYLBENZENE	UG/KG	VOA	5	U	7	U	5	U	10	U	6	U
METHYLENE CHLORIDE	UG/KG	VOA	5	U	7	U	11	U	32	B	10	U
STYRENE	UG/KG	VOA	5	U	7	U	5	U	10	U	6	U
TETRACHLOROETHENE	UG/KG	VOA	5	U	7	U	5	U	10	U	6	U
TOLUENE	UG/KG	VOA	5	U	2	J	5	U	28		20	U
TRANS-1,3-DICHLOROPROPENE	UG/KG	VOA	5	U	7	U	5	U	10	U	6	U
TRICHLOROETHENE	UG/KG	VOA	5	U	7	U	5	U	10	U	6	U
VINYL ACETATE	UG/KG	VOA	11	U	13	U	11	U	21	U	12	U
VINYL CHLORIDE	UG/KG	VOA	11	U	13	U	11	U	21	U	12	U
XYLENES (TOTAL)	UG/KG	VOA	5	U	7	U	5	U	10	U	6	U

NAVSTA-SAN DIEGO
SITE 2 SOILS

		SAMPLE NUMBER:	NS2-BH12-S01-5		NS2-BH12-S02-15		NS2-BH13-S01-10		NS2-BH13-S01-5		NS2-BH13-S02-5	
		SAMPLING DATE:	02/05/91		02/05/91		02/06/91		02/06/91		02/06/91	
		BORING:	BH12		BH12		BH13		BH13		BH13	
		SITE:	NS2		NS2		NS2		NS2		NS2	
		DEPTH:	5		15		10		5		5	
COMPOUND NAME	UNITS	TEST CODE	RESULT	QUALIFIER	RESULT	QUALIFIER	RESULT	QUALIFIER	RESULT	QUALIFIER	RESULT	QUALIFIER
1,2,4-TRICHLOROBENZENE	UG/KG	BNA	470	U	350	U	340	U			370	U
1,2-DICHLOROBENZENE	UG/KG	BNA	470	U	350	U	340	U			370	U
1,3-DICHLOROBENZENE	UG/KG	BNA	470	U	350	U	340	U			370	U
1,4-DICHLOROBENZENE	UG/KG	BNA	470	U	350	U	340	U			370	U
2,4,5-TRICHLOROPHENOL	UG/KG	BNA	2300	U	1700	U	1600	U			1800	U
2,4,6-TRICHLOROPHENOL	UG/KG	BNA	470	U	350	U	340	U			370	U
2,4-DICHLOROPHENOL	UG/KG	BNA	470	U	350	U	340	U			370	U
2,4-DIMETHYLPHENOL	UG/KG	BNA	470	U	350	U	340	U			370	U
2,4-DINITROPHENOL	UG/KG	BNA	2300	U	1700	U	1600	U			1800	U
2,4-DINITROTOLUENE	UG/KG	BNA	470	U	350	U	340	U			370	U
2,6-DINITROTOLUENE	UG/KG	BNA	470	U	350	U	340	U			370	U
2-CHLORONAPHTHALENE	UG/KG	BNA	470	U	350	U	340	U			370	U
2-CHLOROPHENOL	UG/KG	BNA	470	U	350	U	340	U			370	U
2-METHYLNAPHTHALENE	UG/KG	BNA	470	U	350	U	340	U			370	U
2-METHYLPHENOL	UG/KG	BNA	470	U	350	U	340	U			370	U
2-NITROANILINE	UG/KG	BNA	2300	U	1700	U	1600	U			1800	U
2-NITROPHENOL	UG/KG	BNA	470	U	350	U	340	U			370	U
3,3'-DICHLOROBENZIDINE	UG/KG	BNA	940	U	710	U	670	U			750	U
3-NITROANILINE	UG/KG	BNA	2300	U	1700	U	1600	U			1800	U
4,6-DINITRO-2-METHYLPHENOL	UG/KG	BNA	2300	U	1700	U	1600	U			1800	U
4-BROMOPHENYL-PHENYLETHER	UG/KG	BNA	470	U	350	U	340	U			370	U
4-CHLORO-3-METHYLPHENOL	UG/KG	BNA	470	U	350	U	340	U			370	U
4-CHLOROANILINE	UG/KG	BNA	470	U	350	U	340	U			370	U
4-CHLOROPHENYL-PHENYLETHER	UG/KG	BNA	470	U	350	U	340	U			370	U
4-METHYLPHENOL	UG/KG	BNA	470	U	350	U	340	U			370	U
4-NITROANILINE	UG/KG	BNA	2300	U	1700	U	1600	U			1800	U
4-NITROPHENOL	UG/KG	BNA	2300	U	1700	U	1600	U			1800	U
ACENAPHTHENE	UG/KG	BNA	470	U	350	U	340	U			370	U
ACENAPHTHYLENE	UG/KG	BNA	470	U	350	U	340	U			370	U
ANTHRACENE	UG/KG	BNA	470	U	350	U	340	U			370	U
BENZO(A)ANTHRACENE	UG/KG	BNA	470	U	350	U	340	U			370	U
BENZO(A)PYRENE	UG/KG	BNA	470	U	350	U	340	U			370	U
BENZO(B)FLUORANTHENE	UG/KG	BNA	470	U	350	U	340	U			370	U
BENZO(G,H,I)PERYLENE	UG/KG	BNA	470	U	350	U	340	U			370	U
BENZO(K)FLUORANTHENE	UG/KG	BNA	470	U	350	U	340	U			370	U
BENZOIC ACID	UG/KG	BNA	2300	U	1700	U	1600	U			1800	U
BENZYL ALCOHOL	UG/KG	BNA	470	U	350	U	340	U			370	U
BIS(2-CHLOROETHOXY)METHANE	UG/KG	BNA	470	U	350	U	340	U			370	U
BIS(2-CHLOROETHYL)ETHER	UG/KG	BNA	470	U	350	U	340	U			370	U
BIS(2-CHLOROISOPROPYL)ETHER	UG/KG	BNA	470	U	350	U	340	U			370	U
BIS(2-ETHYLHEXYL)PHTHALATE	UG/KG	BNA	470	U	350	U	340	U			370	U
BUTYLBENZYLPHTHALATE	UG/KG	BNA	470	U	350	U	340	U			370	U
CHRYSENE	UG/KG	BNA	470	U	350	U	340	U			370	U
DI-N-BUTYLPHTHALATE	UG/KG	BNA	470	U	350	U	340	U			370	U
DI-N-OCTYLPHTHALATE	UG/KG	BNA	470	U	350	U	340	U			370	U
DIBENZ(A,H)ANTHRACENE	UG/KG	BNA	470	U	350	U	340	U			370	U
DIBENZOFURAN	UG/KG	BNA	470	U	350	U	340	U			370	U
DIETHYLPHTHALATE	UG/KG	BNA	470	U	350	U	340	U			370	U
DIMETHYLPHTHALATE	UG/KG	BNA	470	U	350	U	340	U			370	U
FLUORANTHENE	UG/KG	BNA	470	U	350	U	340	U			370	U
FLUORENE	UG/KG	BNA	470	U	350	U	340	U			370	U

NAVSTA-SAN DIEGO
SITE 2 SOILS

		SAMPLE NUMBER:	NS2-BH12-S01-5		NS2-BH12-S02-15		NS2-BH13-S01-10		NS2-BH13-S01-5		NS2-BH13-S02-5	
		SAMPLING DATE:	02/05/91		02/05/91		02/06/91		02/06/91		02/06/91	
		BORING:	BH12		BH12		BH13		BH13		BH13	
		SITE:	NS2		NS2		NS2		NS2		NS2	
		DEPTH:	5		15		10		5		5	
COMPOUND NAME	UNITS	TEST CODE	RESULT	QUALIFIER	RESULT	QUALIFIER	RESULT	QUALIFIER	RESULT	QUALIFIER	RESULT	QUALIFIER
HEXACHLOROBENZENE	UG/KG	BNA	470	U	350	U	340	U			370	U
HEXACHLOROBUTADIENE	UG/KG	BNA	470	U	350	U	340	U			370	U
HEXACHLOROCYCLOPENTADIENE	UG/KG	BNA	470	U	350	U	340	U			370	U
HEXACHLOROETHANE	UG/KG	BNA	470	U	350	U	340	U			370	U
INDENO(1,2,3-C,D)PYRENE	UG/KG	BNA	470	U	350	U	340	U			370	U
ISOPHORONE	UG/KG	BNA	470	U	350	U	340	U			370	U
N-NITROSO-DI-N-PROPYLAMINE	UG/KG	BNA	470	U	350	U	340	U			370	U
N-NITROSODIPHENYLAMINE (1)	UG/KG	BNA	470	U	350	U	340	U			370	U
NAPHTHALENE	UG/KG	BNA	470	U	350	U	340	U			370	U
NITROBENZENE	UG/KG	BNA	470	U	350	U	340	U			370	U
PENTACHLOROPHENOL	UG/KG	BNA	2300	U	1700	U	1600	U			1800	U
PHENANTHRENE	UG/KG	BNA	470	U	350	U	340	U			370	U
PHENOL	UG/KG	BNA	470	U	350	U	340	U			370	U
PYRENE	UG/KG	BNA	470	U	350	U	340	U			370	U
ANTIMONY	MG/KG	CAC METALS	5.0	U	3.9	U	3.8	U			4.2	U
ARSENIC	MG/KG	CAC METALS	2.0	B	0.48	B	0.87	B			2.2	
BARIUM	MG/KG	CAC METALS	178		7.8	U	19.8	B			135	
BERYLLIUM	MG/KG	CAC METALS	3.9		0.20	U	0.20	U			1.5	
CADMIUM	MG/KG	CAC METALS	1.1	U	0.81	U	0.80	U			0.89	U
CHROMIUM	MG/KG	CAC METALS	24.8		2.4		2.7				16.2	
COBALT	MG/KG	CAC METALS	15.3		1.3	B	1.6	B			7.9	B
COPPER	MG/KG	CAC METALS	24.8	U	5.3	U	1.9	U			14.1	U
LEAD	MG/KG	CAC METALS	4.9	U	0.64	U	0.65	U			6.2	
MERCURY	MG/KG	CAC METALS	0.07	U	0.05	U	0.15	U			0.17	U
MOLYBDENUM	MG/KG	CAC METALS	1.9	U	1.4	U	1.4	U			1.6	U
NICKEL	MG/KG	CAC METALS	8.1	U	1.8	U	1.8	U			7.3	B
SELENIUM	MG/KG	CAC METALS	0.28	U	0.21	U	0.25	U			0.21	U
SILVER	MG/KG	CAC METALS	2.2	U	0.88	U	1.3	U			1.4	U
THALLIUM	MG/KG	CAC METALS	0.55	U	0.21	U	0.19	U			0.21	U
VANADIUM	MG/KG	CAC METALS	89.3		12.4		16.0				62.8	
ZINC	MG/KG	CAC METALS	64.4	U	6.0	U	6.4	U			47.8	U
ANTIMONY	UG/KG	CAC METALS										
ARSENIC	UG/KG	CAC METALS										
BARIUM	UG/KG	CAC METALS										
BERYLLIUM	UG/KG	CAC METALS										
CADMIUM	UG/KG	CAC METALS										
CHROMIUM	UG/KG	CAC METALS										
COBALT	UG/KG	CAC METALS										
COPPER	UG/KG	CAC METALS										
LEAD	UG/KG	CAC METALS										
MERCURY	UG/KG	CAC METALS										
MOLYBDENUM	UG/KG	CAC METALS										
NICKEL	UG/KG	CAC METALS										
SELENIUM	UG/KG	CAC METALS										
SILVER	UG/KG	CAC METALS										
THALLIUM	UG/KG	CAC METALS										
VANADIUM	UG/KG	CAC METALS										
ZINC	UG/KG	CAC METALS										
CAC WET EXTRACTION	DATE	CAC WET EX										
COPPER	MG/L	CAC WET EX										
LEAD	*MG/L*	CAC WET EX										

NAVSTA-SAN DIEGO
SITE 2 SOILS

		SAMPLE NUMBER:	NS2-BH12-S01-5		NS2-BH12-S02-15		NS2-BH13-S01-10		NS2-BH13-S01-5		NS2-BH13-S02-5	
		SAMPLING DATE:	02/05/91		02/05/91		02/06/91		02/06/91		02/06/91	
		BORING:	BH12		BH12		BH13		BH13		BH13	
		SITE:	NS2		NS2		NS2		NS2		NS2	
		DEPTH:	5		15		10		5		5	
COMPOUND NAME	UNITS	TEST CODE	RESULT	QUALIFIER	RESULT	QUALIFIER	RESULT	QUALIFIER	RESULT	QUALIFIER	RESULT	QUALIFIER
MERCURY	MG/L	CAC WET EX										
TOTAL CYANIDE	MG/KG	CN	1	UJ	0.50	U	1.0	U			1.0	U
TOTAL CYANIDE	MG/L	CN										
4,4'-DDD	UG/KG	PEST / PCB	23	U			16	U			18	U
4,4'-DDE	UG/KG	PEST / PCB	23	U	17	U	16	U			18	U
4,4'-DDT	UG/KG	PEST / PCB	23	U	17	U	16	U			18	U
ALDRIN	UG/KG	PEST / PCB	11	U	8.6	U	8.2	U			9.1	U
ALPHA CHLORDANE	UG/KG	PEST / PCB										
ALPHA-BHC	UG/KG	PEST / PCB	11	U	8.6	U	8.2	U			9.1	U
ALPHA-CHLORDANE	UG/KG	PEST / PCB	110	U	86	U						
BETA-BHC	UG/KG	PEST / PCB	11	U	8.6	U	8.2	U			9.1	U
CHLORDANE	UG/KG	PEST / PCB					82	U			91	U
DELTA-BHC	UG/KG	PEST / PCB	11	U	8.6	U	8.2	U			9.1	U
DIELDRIN	UG/KG	PEST / PCB	23	U	17	U	16	U			18	U
ENDOSULFAN I	UG/KG	PEST / PCB	11	U	8.6	U	8.2	U			9.1	U
ENDOSULFAN II	UG/KG	PEST / PCB	23	U	17	U	16	U			18	U
ENDOSULFAN SULFATE	UG/KG	PEST / PCB	23	U	17	U	16	U			18	U
ENDRIN	UG/KG	PEST / PCB	23	U	17	U	16	U			18	U
ENDRIN KETONE	UG/KG	PEST / PCB	23	U	17	U	16	U			18	U
GAMMA CHLORDANE	UG/KG	PEST / PCB										
GAMMA-BHC (LINDANE)	UG/KG	PEST / PCB	11	U	8.6	U	8.2	U			9.1	U
GAMMA-CHLORDANE	UG/KG	PEST / PCB	110	U	86	U						
HEPTACHLOR	UG/KG	PEST / PCB	11	U	8.6	U	8.2	U			9.1	U
HEPTACHLOR EPOXIDE	UG/KG	PEST / PCB	11	U	8.6	U	8.2	U			9.1	U
METHOXYCHLOR	UG/KG	PEST / PCB	110	U	86	U	82	U			91	U
PCB-1016	UG/KG	PEST / PCB	110	U	86	U	82	U			91	U
PCB-1221	UG/KG	PEST / PCB	110	U	86	U	82	U			91	U
PCB-1232	UG/KG	PEST / PCB	110	U	86	U	82	U			91	U
PCB-1242	UG/KG	PEST / PCB	110	U	86	U	82	U			91	U
PCB-1248	UG/KG	PEST / PCB	110	U	86	U	82	U			91	U
PCB-1254	UG/KG	PEST / PCB	230	U	170	U	160	U			180	U
PCB-1260	UG/KG	PEST / PCB	230	U	170	U	160	U			180	U
TOXAPHENE	UG/KG	PEST / PCB	230	U	170	U	160	U			180	U
DIESEL	MG/KG	TPHC	15		20		10	U			10	U
HYDRAULIC OIL	MG/KG	TPHC	10	U	10	U	10	U			10	U
MOTOR OIL	MG/KG	TPHC	10	U	360	Z	10	U			10	U
STODDARD	MG/KG	TPHC	10	U	10	U	10	U			10	U
DIESEL	UG/KG	TPHC										
HYDRAULIC OIL	UG/KG	TPHC										
MOTOR OIL	UG/KG	TPHC										
STODDARD	UG/KG	TPHC										
1,1,1-TRICHLOROETHANE	UG/KG	VOA	36	U	13	U	5	U			6	U
1,1,2,2-TETRACHLOROETHANE	UG/KG	VOA	36	U	13	U	5	U			6	U
1,1,2-TRICHLOROETHANE	UG/KG	VOA	36	U	13	U	5	U			6	U
1,1-DICHLOROETHANE	UG/KG	VOA	36	U	13	U	5	U			6	U
1,1-DICHLOROETHENE	UG/KG	VOA	36	U	13	U	5	U			6	U
1,2-DICHLOROETHANE	UG/KG	VOA	36	U	13	U	5	U			6	U
1,2-DICHLOROETHENE (TOTAL)	UG/KG	VOA	36	U	13	U	5	U			6	U
1,2-DICHLOROPROPANE	UG/KG	VOA	36	U	13	U	5	U			6	U
2-BUTANONE	UG/KG	VOA	72	U	27	U	10	U			12	U
2-HEXANONE	UG/KG	VOA	72	U	27	U	10	U			12	U

NAVSTA-SAN DIEGO
SITE 2 SOILS

		SAMPLE NUMBER:	NS2-BH12-S01-5		NS2-BH12-S02-15		NS2-BH13-S01-10		NS2-BH13-S01-5		NS2-BH13-S02-5	
		SAMPLING DATE:	02/05/91		02/05/91		02/06/91		02/06/91		02/06/91	
		BORING:	BH12		BH12		BH13		BH13		BH13	
		SITE:	NS2		NS2		NS2		NS2		NS2	
		DEPTH:	5		15		10		5		5	
COMPOUND NAME	UNITS	TEST CODE	RESULT	QUALIFIER	RESULT	QUALIFIER	RESULT	QUALIFIER	RESULT	QUALIFIER	RESULT	QUALIFIER
4-METHYL-2-PENTANONE	UG/KG	VOA	72	U	27	U	10	U			12	U
ACETONE	UG/KG	VOA	1200	B	290	B	26	U			110	
BENZENE	UG/KG	VOA	36	U	13	U	5	U			6	U
BROMODICHLOROMETHANE	UG/KG	VOA	36	U	13	U	5	U			6	U
BROMOFORM	UG/KG	VOA	36	U	13	U	5	U			6	U
BROMOMETHANE	UG/KG	VOA	72	U	27	U	10	U			12	U
CARBON DISULFIDE	UG/KG	VOA	36	U	13	U	5	U			6	U
CARBON TETRACHLORIDE	UG/KG	VOA	36	U	13	U	5	U			6	U
CHLOROBENZENE	UG/KG	VOA	36	U	13	U	5	U			6	U
CHLOROETHANE	UG/KG	VOA	72	U	27	U	10	U			12	U
CHLOROFORM	UG/KG	VOA	36	U	13	U	5	U			6	U
CHLOROMETHANE	UG/KG	VOA	72	U	27	U	10	U			12	U
CIS-1,3-DICHLOROPROPENE	UG/KG	VOA	36	U	13	U	5	U			6	U
DIBROMOCHLOROMETHANE	UG/KG	VOA	36	U	13	U	5	U			6	U
ETHYLBENZENE	UG/KG	VOA	36	U	13	U	5	U			6	U
METHYLENE CHLORIDE	UG/KG	VOA	84	U	31	U	5	U			8	U
STYRENE	UG/KG	VOA	36	U	13	U	5	U			6	U
TETRACHLOROETHENE	UG/KG	VOA	36	U	13	U	5	U			6	U
TOLUENE	UG/KG	VOA	36	U	13	U	5	U			47	
TRANS-1,3-DICHLOROPROPENE	UG/KG	VOA	36	U	13	U	5	U			6	U
TRICHLOROETHENE	UG/KG	VOA	36	U	13	U	5	U			6	U
VINYL ACETATE	UG/KG	VOA	72	U	27	U	10	U			12	U
VINYL CHLORIDE	UG/KG	VOA	72	U	27	U	10	U			12	U
XYLENES (TOTAL)	UG/KG	VOA	36	U	13	U	5	U			6	U

NAVSTA-SAN DIEGO
SITE 2 SOILS

		SAMPLE NUMBER:	NS2-BH14-S01-10		NS2-BH14-S02-15		NS2-BH15-S01-5		NS2-BH15-S02-15		NS2-ER-02/12/91	
		SAMPLING DATE:	02/07/91		02/07/91		02/06/91		02/06/91		02/12/91	
		BORING:	BH14		BH14		BH15		BH15		ER	
		SITE:	NS2		NS2		NS2		NS2		NS2	
		DEPTH:	10		15		5		15		NS2-ER-02/12/91	
COMPOUND NAME	UNITS	TEST CODE	RESULT	QUALIFIER	RESULT	QUALIFIER	RESULT	QUALIFIER	RESULT	QUALIFIER	RESULT	QUALIFIER
1,2,4-TRICHLOROBENZENE	UG/KG	BNA	380	U	420	U	350	U	430	U	10	U
1,2-DICHLOROBENZENE	UG/KG	BNA	380	U	420	U	350	U	430	U	10	U
1,3-DICHLOROBENZENE	UG/KG	BNA	380	U	420	U	350	U	430	U	10	U
1,4-DICHLOROBENZENE	UG/KG	BNA	380	U	420	U	350	U	430	U	10	U
2,4,5-TRICHLOROPHENOL	UG/KG	BNA	1800	U	2100	U	1700	U	2100	U	50	U
2,4,6-TRICHLOROPHENOL	UG/KG	BNA	380	U	420	U	350	U	430	U	10	U
2,4-DICHLOROPHENOL	UG/KG	BNA	380	U	420	U	350	U	430	U	10	U
2,4-DIMETHYLPHENOL	UG/KG	BNA	380	U	420	U	350	U	430	U	10	U
2,4-DINITROPHENOL	UG/KG	BNA	1800	U	2100	U	1700	U	2100	U	50	U
2,4-DINITROTOLUENE	UG/KG	BNA	380	U	420	U	350	U	430	U	10	U
2,6-DINITROTOLUENE	UG/KG	BNA	380	U	420	U	350	U	430	U	10	U
2-CHLORONAPHTHALENE	UG/KG	BNA	380	U	420	U	350	U	430	U	10	U
2-CHLOROPHENOL	UG/KG	BNA	380	U	420	U	350	U	430	U	10	U
2-METHYLNAPHTHALENE	UG/KG	BNA	380	U	420	U	350	U	430	U	10	U
2-METHYLPHENOL	UG/KG	BNA	380	U	420	U	350	U	430	U	10	U
2-NITROANILINE	UG/KG	BNA	1800	U	2100	U	1700	U	2100	U	50	U
2-NITROPHENOL	UG/KG	BNA	380	U	420	U	350	U	430	U	10	U
3,3'-DICHLOROBENZIDINE	UG/KG	BNA	760	U	850	U	700	U	860	U	20	U
3-NITROANILINE	UG/KG	BNA	1800	U	2100	U	1700	U	2100	U	50	U
4,6-DINITRO-2-METHYLPHENOL	UG/KG	BNA	1800	U	2100	U	1700	U	2100	U	50	U
4-BROMOPHENYL-PHENYLETHER	UG/KG	BNA	380	U	420	U	350	U	430	U	10	U
4-CHLORO-3-METHYLPHENOL	UG/KG	BNA	380	U	420	U	350	U	430	U	10	U
4-CHLOROANILINE	UG/KG	BNA	380	U	420	U	350	U	430	U	10	U
4-CHLOROPHENYL-PHENYLETHER	UG/KG	BNA	380	U	420	U	350	U	430	U	10	U
4-METHYLPHENOL	UG/KG	BNA	380	U	420	U	350	U	430	U	10	U
4-NITROANILINE	UG/KG	BNA	1800	U	2100	U	1700	U	2100	U	50	U
4-NITROPHENOL	UG/KG	BNA	1800	U	2100	U	1700	U	2100	U	50	U
ACENAPHTHENE	UG/KG	BNA	380	U	420	U	350	U	430	U	10	U
ACENAPHTHYLENE	UG/KG	BNA	380	U	420	U	350	U	430	U	10	U
ANTHRACENE	UG/KG	BNA	380	U	420	U	350	U	430	U	10	U
BENZO(A)ANTHRACENE	UG/KG	BNA	380	U	420	U	350	U	430	U	10	U
BENZO(A)PYRENE	UG/KG	BNA	380	U	420	U	350	U	430	U	10	U
BENZO(B)FLUORANTHENE	UG/KG	BNA	380	U	420	U	82	J	430	U	10	U
BENZO(G,H,I)PERYLENE	UG/KG	BNA	380	U	420	U	350	U	430	U	10	U
BENZO(K)FLUORANTHENE	UG/KG	BNA	380	U	420	U	120	J	430	U	10	U
BENZOIC ACID	UG/KG	BNA	1800	U	2100	U	1700	U	2100	U	50	U
BENZYL ALCOHOL	UG/KG	BNA	380	U	420	U	350	U	430	U	10	U
BIS(2-CHLOROETHOXY)METHANE	UG/KG	BNA	380	U	420	U	350	U	430	U	10	U
BIS(2-CHLOROETHYL)ETHER	UG/KG	BNA	380	U	420	U	350	U	430	U	10	U
BIS(2-CHLOROISOPROPYL)ETHER	UG/KG	BNA	380	U	420	U	350	U	430	U	10	U
BIS(2-ETHYLHEXYL)PHTHALATE	UG/KG	BNA	380	U	420	U	220	J	430	U	10	U
BUTYLBENZYLPHTHALATE	UG/KG	BNA	380	U	420	U	350	U	430	U	10	U
CHRYSENE	UG/KG	BNA	380	U	420	U	110	J	430	U	10	U
DI-N-BUTYLPHTHALATE	UG/KG	BNA	380	U	420	U	350	U	430	U	10	U
DI-N-OCTYLPHTHALATE	UG/KG	BNA	380	U	420	U	350	U	430	U	10	U
DIBENZ(A,H)ANTHRACENE	UG/KG	BNA	380	U	420	U	350	U	430	U	10	U
DIBENZOFURAN	UG/KG	BNA	380	U	420	U	350	U	430	U	10	U
DIETHYLPHTHALATE	UG/KG	BNA	380	U	420	U	350	U	430	U	10	U
DIMETHYLPHTHALATE	UG/KG	BNA	380	U	420	U	350	U	430	U	10	U
FLUORANTHENE	UG/KG	BNA	380	U	420	U	150	J	430	U	10	U
FLUORENE	UG/KG	BNA	380	U	420	U	350	U	430	U	10	U

NAVSTA-SAN DIEGO
SITE 2 SOILS

		SAMPLE NUMBER:	NS2-BH14-S01-10		NS2-BH14-S02-15		NS2-BH15-S01-5		NS2-BH15-S02-15		NS2-ER-02/12/91	
		SAMPLING DATE:	02/07/91		02/07/91		02/06/91		02/06/91		02/12/91	
		BORING:	BH14		BH14		BH15		BH15		ER	
		SITE:	NS2		NS2		NS2		NS2		NS2	
		DEPTH:	10		15		5		15		NS2-ER-02/12/91	
COMPOUND NAME	UNITS	TEST CODE	RESULT	QUALIFIER	RESULT	QUALIFIER	RESULT	QUALIFIER	RESULT	QUALIFIER	RESULT	QUALIFIER
HEXACHLOROBENZENE	UG/KG	BNA	380	U	420	U	350	U	430	U	10	U
HEXACHLOROBUTADIENE	UG/KG	BNA	380	U	420	U	350	U	430	U	10	U
HEXACHLOROCYCLOPENTADIENE	UG/KG	BNA	380	U	420	U	350	U	430	U	10	U
HEXACHLOROETHANE	UG/KG	BNA	380	U	420	U	350	U	430	U	10	U
INDENO(1,2,3-C,D)PYRENE	UG/KG	BNA	380	U	420	U	350	U	430	U	10	U
ISOPHORONE	UG/KG	BNA	380	U	420	U	350	U	430	U	10	U
N-NITROSO-DI-N-PROPYLAMINE	UG/KG	BNA	380	U	420	U	350	U	430	U	10	U
N-NITROSODIPHENYLAMINE (1)	UG/KG	BNA	380	U	420	U	350	U	430	U	10	U
NAPHTHALENE	UG/KG	BNA	380	U	420	U	350	U	430	U	10	U
NITROBENZENE	UG/KG	BNA	380	U	420	U	350	U	430	U	10	U
PENTACHLOROPHENOL	UG/KG	BNA	1800	U	2100	U	1700	U	2100	U	50	U
PHENANTHRENE	UG/KG	BNA	380	U	420	U	54	J	430	U	10	U
PHENOL	UG/KG	BNA	380	U	420	U	350	U	430	U	10	U
PYRENE	UG/KG	BNA	380	U	420	U	140	J	430	U	10	U
ANTIMONY	MG/KG	CAC METALS	4.2	U	6.9	B	3.9	UJ	4.7	U		
ARSENIC	MG/KG	CAC METALS	1.2	B	1.7	B	1.5	B	1.7	B		
BARIUM	MG/KG	CAC METALS	25.0	B	163		32.6	B	112			
BERYLLIUM	MG/KG	CAC METALS	0.57	B	1.6		0.49	B	1.0	B		
CADMIUM	MG/KG	CAC METALS	0.88	U	0.96	U	0.82	U	0.98	U		
CHROMIUM	MG/KG	CAC METALS	4.9		17.1		8.9		9.4			
COBALT	MG/KG	CAC METALS	2.7	B	11.8	B	2.7	B	6.3	B		
COPPER	MG/KG	CAC METALS	14.0	U	25.7	U	89.6		10	U		
LEAD	MG/KG	CAC METALS	1.0	U	4.4	U	40.4		2.4	U		
MERCURY	MG/KG	CAC METALS	0.17	U	0.19	U	0.16	U	0.19	U		
MOLYBDENUM	MG/KG	CAC METALS	1.5	U	1.7	U	1.4	U	1.7	U		
NICKEL	MG/KG	CAC METALS	2.1	B	8.2	B	5.4	B	4.1	B		
SELENIUM	MG/KG	CAC METALS	0.23	U	0.24	U	0.20	U	0.27	U		
SILVER	MG/KG	CAC METALS	0.72	U	1.8	U	1.4	U	1.5	U		
THALLIUM	MG/KG	CAC METALS	0.23	U	0.24	U	0.20	U	0.25	U		
VANADIUM	MG/KG	CAC METALS	17.0		70.5		19.3		39.0			
ZINC	MG/KG	CAC METALS	16.5	U	71.3	U	103	U	28.0	U		
ANTIMONY	UG/KG	CAC METALS									19.0	U
ARSENIC	UG/KG	CAC METALS									2.0	U
BARIUM	UG/KG	CAC METALS									12.9	B
BERYLLIUM	UG/KG	CAC METALS									1.0	U
CADMIUM	UG/KG	CAC METALS									4.0	U
CHROMIUM	UG/KG	CAC METALS									4.0	U
COBALT	UG/KG	CAC METALS									5.0	U
COPPER	UG/KG	CAC METALS									6.0	U
LEAD	UG/KG	CAC METALS									1.7	B
MERCURY	UG/KG	CAC METALS									0.20	U
MOLYBDENUM	UG/KG	CAC METALS									7.0	U
NICKEL	UG/KG	CAC METALS									9.0	U
SELENIUM	UG/KG	CAC METALS									1.0	U
SILVER	UG/KG	CAC METALS									3.0	U
THALLIUM	UG/KG	CAC METALS									2.1	B
VANADIUM	UG/KG	CAC METALS									16.1	B
ZINC	UG/KG	CAC METALS									149	
CAC WET EXTRACTION	DATE	CAC WET EX										
COPPER	MG/L	CAC WET EX										
LEAD	MG/L	CAC WET EX										

NAVSTA-SAN DIEGO
SITE 2 SOILS

		SAMPLE NUMBER:	NS2-BH14-S01-10		NS2-BH14-S02-15		NS2-BH15-S01-5		NS2-BH15-S02-15		NS2-ER-02/12/91	
		SAMPLING DATE:	02/07/91		02/07/91		02/06/91		02/06/91		02/12/91	
		BORING:	BH14		BH14		BH15		BH15		ER	
		SITE:	NS2		NS2		NS2		NS2		NS2	
		DEPTH:	10		15		5		15		NS2-ER-02/12/91	
COMPOUND NAME	UNITS	TEST CODE	RESULT	QUALIFIER	RESULT	QUALIFIER	RESULT	QUALIFIER	RESULT	QUALIFIER	RESULT	QUALIFIER
MERCURY	MG/L	CAC WET EX										
TOTAL CYANIDE	MG/KG	CN	1	U	1	U	1.0	U				
TOTAL CYANIDE	MG/L	CN										
4,4'-DDD	UG/KG	PEST / PCB	18	U	21	U	34	UJ	21	U	0.10	U
4,4'-DDE	UG/KG	PEST / PCB	18	U	21	U	34	UJ	21	U	0.10	U
4,4'-DDT	UG/KG	PEST / PCB	18	U	21	U	34	UJ	21	U	0.10	U
ALDRIN	UG/KG	PEST / PCB	9.2	U	10	U	17	UJ	10	U	0.05	U
ALPHA CHLORDANE	UG/KG	PEST / PCB	92	U	100	U						
ALPHA-BHC	UG/KG	PEST / PCB	9.2	U	10	U	17	UJ	10	U	0.05	U
ALPHA-CHLORDANE	UG/KG	PEST / PCB									0.50	U
BETA-BHC	UG/KG	PEST / PCB	9.2	U	10	U	17	UJ	10	U	0.05	U
CHLORDANE	UG/KG	PEST / PCB					170	UJ	100	U		
DELTA-BHC	UG/KG	PEST / PCB	9.2	U	10	U	17	UJ	10	U	0.05	U
DIELDRIN	UG/KG	PEST / PCB	18	U	21	U	34	UJ	21	U	0.10	U
ENDOSULFAN I	UG/KG	PEST / PCB	9.2	U	10	U	17	UJ	10	U	0.05	U
ENDOSULFAN II	UG/KG	PEST / PCB	18	U	21	U	34	UJ	21	U	0.10	U
ENDOSULFAN SULFATE	UG/KG	PEST / PCB	18	U	21	U	34	UJ	21	U	0.10	U
ENDRIN	UG/KG	PEST / PCB	18	U	21	U	34	UJ	21	U	0.10	U
ENDRIN KETONE	UG/KG	PEST / PCB	18	U	21	U	34	UJ	21	U	0.10	U
GAMMA CHLORDANE	UG/KG	PEST / PCB	92	U	100	U						
GAMMA-BHC (LINDANE)	UG/KG	PEST / PCB	9.2	U	10	U	17	UJ	10	U	0.05	U
GAMMA-CHLORDANE	UG/KG	PEST / PCB									0.50	U
HEPTACHLOR	UG/KG	PEST / PCB	9.2	U	10	U	17	UJ	10	U	0.05	U
HEPTACHLOR EPOXIDE	UG/KG	PEST / PCB	9.2	U	10	U	17	UJ	10	U	0.05	U
METHOXYCHLOR	UG/KG	PEST / PCB	92	U	100	U	170	UJ	100	U	0.50	U
PCB-1016	UG/KG	PEST / PCB	92	U	100	U	170	UJ	100	U	0.50	U
PCB-1221	UG/KG	PEST / PCB	92	U	100	U	170	UJ	100	U	0.50	U
PCB-1232	UG/KG	PEST / PCB	92	U	100	U	170	UJ	100	U	0.50	U
PCB-1242	UG/KG	PEST / PCB	92	U	100	U	170	UJ	100	U	0.50	U
PCB-1248	UG/KG	PEST / PCB	92	U	100	U	170	UJ	100	U	0.50	U
PCB-1254	UG/KG	PEST / PCB	180	U	210	U	340	UJ	210	U	1.0	U
PCB-1260	UG/KG	PEST / PCB	180	U	210	U	560	J	210	U	1.0	U
TOXAPHENE	UG/KG	PEST / PCB	180	U	210	U	340	UJ	210	U	1.0	U
DIESEL	MG/KG	TPHC	10	U	10	U	11		10	U		
HYDRAULIC OIL	MG/KG	TPHC	30	Z	17	Z	10	U	10	U		
MOTOR OIL	MG/KG	TPHC	30		27		10	U	10	U		
STODDARD	MG/KG	TPHC	10	U	10	U	10	U	10	U		
DIESEL	UG/KG	TPHC									250	U
HYDRAULIC OIL	UG/KG	TPHC									520	
MOTOR OIL	UG/KG	TPHC									480	Z
STODDARD	UG/KG	TPHC									250	U
1,1,1-TRICHLOROETHANE	UG/KG	VOA	5	U	7	U	27	U	810	U	5	U
1,1,2,2-TETRACHLOROETHANE	UG/KG	VOA	5	U	7	U	27	U	810	U	5	U
1,1,2-TRICHLOROETHANE	UG/KG	VOA	5	U	7	U	27	U	810	U	5	U
1,1-DICHLOROETHANE	UG/KG	VOA	5	U	7	U	27	U	810	U	5	U
1,1-DICHLOROETHENE	UG/KG	VOA	5	U	7	U	27	U	810	U	5	U
1,2-DICHLOROETHANE	UG/KG	VOA	5	U	7	U	27	U	810	U	5	U
1,2-DICHLOROETHENE (TOTAL)	UG/KG	VOA	5	U	7	U	27	U	810	U	5	U
1,2-DICHLOROPROPANE	UG/KG	VOA	5	U	7	U	27	U	810	U	5	U
2-BUTANONE	UG/KG	VOA	11	U	13	U	54	U	1600	U	10	U
2-HEXANONE	UG/KG	VOA	11	U	13	U	54	U	1600	U	10	U

NAVSTA-SAN DIEGO
SITE 2 SOILS

		SAMPLE NUMBER:	NS2-BH14-S01-10		NS2-BH14-S02-15		NS2-BH15-S01-5		NS2-BH15-S02-15		NS2-ER-02/12/91	
		SAMPLING DATE:	02/07/91		02/07/91		02/06/91		02/06/91		02/12/91	
		BORING:	BH14		BH14		BH15		BH15		ER	
		SITE:	NS2		NS2		NS2		NS2		NS2	
		DEPTH:	10		15		5		15		NS2-ER-02/12/91	
COMPOUND NAME	UNITS	TEST CODE	RESULT	QUALIFIER	RESULT	QUALIFIER	RESULT	QUALIFIER	RESULT	QUALIFIER	RESULT	QUALIFIER
4-METHYL-2-PENTANONE	UG/KG	VOA	11	U	13	U	54	U	1600	U	10	U
ACETONE	UG/KG	VOA	11	U	13	U	1100	BJ	1600	U	10	U
BENZENE	UG/KG	VOA	5	U	7	U	27	U	810	U	5	U
BROMODICHLOROMETHANE	UG/KG	VOA	5	U	7	U	27	U	810	U	4	J
BROMOFORM	UG/KG	VOA	5	U	7	U	27	U	810	U	5	U
BROMOMETHANE	UG/KG	VOA	11	U	13	U	54	U	1600	U	10	U
CARBON DISULFIDE	UG/KG	VOA	5	U	7	U	27	U	810	U	5	U
CARBON TETRACHLORIDE	UG/KG	VOA	5	U	7	U	27	U	810	U	5	U
CHLOROBENZENE	UG/KG	VOA	5	U	7	U	27	U	810	U	5	U
CHLOROETHANE	UG/KG	VOA	11	U	13	U	54	U	1600	U	10	U
CHLOROFORM	UG/KG	VOA	5	U	7	U	27	U	810	U	14	
CHLOROMETHANE	UG/KG	VOA	11	U	13	U	54	U	1600	U	10	U
CIS-1,3-DICHLOROPROPENE	UG/KG	VOA	5	U	7	U	27	U	810	U	5	U
DIBROMOCHLOROMETHANE	UG/KG	VOA	5	U	7	U	27	U	810	U	2	J
ETHYLBENZENE	UG/KG	VOA	5	U	7	U	27	U	810	U	5	U
METHYLENE CHLORIDE	UG/KG	VOA	13	U	13	U	41	U	970	U	3	BJ
STYRENE	UG/KG	VOA	5	U	7	U	27	U	810	U	5	U
TETRACHLOROETHENE	UG/KG	VOA	5	U	7	U	27	U	810	U	5	U
TOLUENE	UG/KG	VOA	5	U	7	U	27	U	810	U	5	U
TRANS-1,3-DICHLOROPROPENE	UG/KG	VOA	5	U	7	U	27	U	810	U	5	U
TRICHLOROETHENE	UG/KG	VOA	5	U	7	U	27	U	810	U	5	U
VINYL ACETATE	UG/KG	VOA	11	U	13	U	54	U	1600	U	10	U
VINYL CHLORIDE	UG/KG	VOA	11	U	13	U	54	U	1600	U	10	U
XYLENES (TOTAL)	UG/KG	VOA	5	U	7	U	27	U	810	U	5	U

NAVSTA-SAN DIEGO
SITE 2 SOILS

		SAMPLE NUMBER:	NS2-ER-02/15/91		NS2-ER-2-13-91		NS2-ER-2-4-91		NS2-ER-2-5-91		NS2-ER-2-6-91	
		SAMPLING DATE:	02/15/91		02/13/91		02/04/91		02/05/91		02/06/91	
		BORING:	ER		ER		ER		ER		ER	
		SITE:	NS2		NS2		NS2		NS2		NS2	
		DEPTH:	NS2-ER-02/15/91		13-91		4-91		5-91		6-91	
COMPOUND NAME	UNITS	TEST CODE	RESULT	QUALIFIER	RESULT	QUALIFIER	RESULT	QUALIFIER	RESULT	QUALIFIER	RESULT	QUALIFIER
1,2,4-TRICHLOROBENZENE	UG/KG	BNA	10	U			10	U	10	U		
1,2-DICHLOROBENZENE	UG/KG	BNA	10	U			10	U	10	U		
1,3-DICHLOROBENZENE	UG/KG	BNA	10	U			10	U	10	U		
1,4-DICHLOROBENZENE	UG/KG	BNA	10	U			10	U	10	U		
2,4,5-TRICHLOROPHENOL	UG/KG	BNA	50	U			50	U	50	U		
2,4,6-TRICHLOROPHENOL	UG/KG	BNA	10	U			10	U	10	U		
2,4-DICHLOROPHENOL	UG/KG	BNA	10	U			10	U	10	U		
2,4-DIMETHYLPHENOL	UG/KG	BNA	10	U			10	U	10	U		
2,4-DINITROPHENOL	UG/KG	BNA	50	U			50	U	50	U		
2,4-DINITROTOLUENE	UG/KG	BNA	10	U			10	U	10	U		
2,6-DINITROTOLUENE	UG/KG	BNA	10	U			10	U	10	U		
2-CHLORONAPHTHALENE	UG/KG	BNA	10	U			10	U	10	U		
2-CHLOROPHENOL	UG/KG	BNA	10	U			10	U	10	U		
2-METHYLNAPHTHALENE	UG/KG	BNA	10	U			10	U	10	U		
2-METHYLPHENOL	UG/KG	BNA	10	U			10	U	10	U		
2-NITROANILINE	UG/KG	BNA	50	U			50	U	50	U		
2-NITROPHENOL	UG/KG	BNA	10	U			10	U	10	U		
3,3'-DICHLOROBENZIDINE	UG/KG	BNA	20	U			20	U	20	U		
3-NITROANILINE	UG/KG	BNA	50	U			50	U	50	U		
4,6-DINITRO-2-METHYLPHENOL	UG/KG	BNA	50	U			50	U	50	U		
4-BROMOPHENYL-PHENYLETHER	UG/KG	BNA	10	U			10	U	10	U		
4-CHLORO-3-METHYLPHENOL	UG/KG	BNA	10	U			10	U	10	U		
4-CHLOROANILINE	UG/KG	BNA	10	U			10	U	10	U		
4-CHLOROPHENYL-PHENYLETHER	UG/KG	BNA	10	U			10	U	10	U		
4-METHYLPHENOL	UG/KG	BNA	10	U			10	U	10	U		
4-NITROANILINE	UG/KG	BNA	50	U			50	U	50	U		
4-NITROPHENOL	UG/KG	BNA	50	U			50	U	50	U		
ACENAPHTHENE	UG/KG	BNA	10	U			10	U	10	U		
ACENAPHTHYLENE	UG/KG	BNA	10	U			10	U	10	U		
ANTHRACENE	UG/KG	BNA	10	U			10	U	10	U		
BENZO(A)ANTHRACENE	UG/KG	BNA	10	U			10	U	10	U		
BENZO(A)PYRENE	UG/KG	BNA	10	U			10	U	10	U		
BENZO(B)FLUORANTHENE	UG/KG	BNA	10	U			10	U	10	U		
BENZO(G,H,I)PERYLENE	UG/KG	BNA	10	U			10	U	10	U		
BENZO(K)FLUORANTHENE	UG/KG	BNA	10	U			10	U	10	U		
BENZOIC ACID	UG/KG	BNA	50	U			50	U	50	U		
BENZYL ALCOHOL	UG/KG	BNA	1	J			10	U	10	U		
BIS(2-CHLOROETHOXY)METHANE	UG/KG	BNA	10	U			10	U	10	U		
BIS(2-CHLOROETHYL)ETHER	UG/KG	BNA	10	U			10	U	10	U		
BIS(2-CHLOROISOPROPYL)ETHER	UG/KG	BNA	10	U			10	U	10	U		
BIS(2-ETHYLHEXYL)PHTHALATE	UG/KG	BNA	10	U			10	U	10	U		
BUTYLBENZYLPHTHALATE	UG/KG	BNA	10	U			10	U	10	U		
CHRYSENE	UG/KG	BNA	10	U			10	U	10	U		
DI-N-BUTYLPHTHALATE	UG/KG	BNA	10	U			10	U	1	J		
DI-N-OCTYLPHTHALATE	UG/KG	BNA	10	U			10	U	10	U		
DIBENZ(A,H)ANTHRACENE	UG/KG	BNA	10	U			10	U	10	U		
DIBENZOFURAN	UG/KG	BNA	10	U			10	U	10	U		
DIETHYLPHTHALATE	UG/KG	BNA	10	U			10	U	10	U		
DIMETHYLPHTHALATE	UG/KG	BNA	10	U			10	U	10	U		
FLUORANTHENE	UG/KG	BNA	10	U			10	U	10	U		
FLUORENE	UG/KG	BNA	10	U			10	U	10	U		

NAVSTA-SAN DIEGO
SITE 2 SOILS

		SAMPLE NUMBER:	NS2-ER-02/15/91		NS2-ER-2-13-91		NS2-ER-2-4-91		NS2-ER-2-5-91		NS2-ER-2-6-91	
		SAMPLING DATE:	02/15/91		02/13/91		02/04/91		02/05/91		02/06/91	
		BORING:	ER		ER		ER		ER		ER	
		SITE:	NS2		NS2		NS2		NS2		NS2	
		DEPTH:	NS2-ER-02/15/91		13-91		4-91		5-91		6-91	
COMPOUND NAME	UNITS	TEST CODE	RESULT	QUALIFIER	RESULT	QUALIFIER	RESULT	QUALIFIER	RESULT	QUALIFIER	RESULT	QUALIFIER
HEXACHLOROBENZENE	UG/KG	BNA	10	U			10	U	10	U		
HEXACHLOROBUTADIENE	UG/KG	BNA	10	U			10	U	10	U		
HEXACHLOROCYCLOPENTADIENE	UG/KG	BNA	10	U			10	U	10	U		
HEXACHLOROETHANE	UG/KG	BNA	10	U			10	U	10	U		
INDENO(1,2,3-C,D)PYRENE	UG/KG	BNA	10	U			10	U	10	U		
ISOPHORONE	UG/KG	BNA	10	U			10	U	10	U		
N-NITROSO-DI-N-PROPYLAMINE	UG/KG	BNA	10	U			10	U	10	U		
N-NITROSODIPHENYLAMINE (1)	UG/KG	BNA	10	U			10	U	10	U		
NAPHTHALENE	UG/KG	BNA	10	U			10	U	10	U		
NITROBENZENE	UG/KG	BNA	10	U			10	U	10	U		
PENTACHLOROPHENOL	UG/KG	BNA	50	U			50	U	50	U		
PHENANTHRENE	UG/KG	BNA	10	U			10	U	10	U		
PHENOL	UG/KG	BNA	10	U			10	U	6	J		
PYRENE	UG/KG	BNA	10	U			10	U	10	U		
ANTIMONY	MG/KG	CAC METALS										
ARSENIC	MG/KG	CAC METALS										
BARIUM	MG/KG	CAC METALS										
BERYLLIUM	MG/KG	CAC METALS										
CADMIUM	MG/KG	CAC METALS										
CHROMIUM	MG/KG	CAC METALS										
COBALT	MG/KG	CAC METALS										
COPPER	MG/KG	CAC METALS										
LEAD	MG/KG	CAC METALS										
MERCURY	MG/KG	CAC METALS										
MOLYBDENUM	MG/KG	CAC METALS										
NICKEL	MG/KG	CAC METALS										
SELENIUM	MG/KG	CAC METALS										
SILVER	MG/KG	CAC METALS										
THALLIUM	MG/KG	CAC METALS										
VANADIUM	MG/KG	CAC METALS										
ZINC	MG/KG	CAC METALS										
ANTIMONY	UG/KG	CAC METALS	19.0	U	19.0	U	19.0	U	19.0	U	19.0	U
ARSENIC	UG/KG	CAC METALS	1.0	U	2.0	U	1.0	U	2.0	U	2.0	U
BARIUM	UG/KG	CAC METALS	4.0	U	4.0	U	6.2	B	8.1	B	7.4	B
BERYLLIUM	UG/KG	CAC METALS	1.0	U	1.0	U	1.0	U	1.0	U	1.0	U
CADMIUM	UG/KG	CAC METALS	4.0	U	4.0	U	4.0	U	4.0	U	4.0	U
CHROMIUM	UG/KG	CAC METALS	4.0	U	4.0	U	4.0	U	4.0	U	4.0	U
COBALT	UG/KG	CAC METALS	5.0	U	5.0	U	5.0	U	5.0	U	5.0	U
COPPER	UG/KG	CAC METALS	6.0	U	11.7	B	113		48.7		38.9	
LEAD	UG/KG	CAC METALS	1.0	U	1.0	U	3.8		4.7		2.6	B
MERCURY	UG/KG	CAC METALS	0.20	U	0.20	U	0.20	U	0.20	U	0.20	U
MOLYBDENUM	UG/KG	CAC METALS	7.0	U	7.0	U	7.0	U	7.0	U	7.0	U
NICKEL	UG/KG	CAC METALS	9.0	U	9.0	U	13.8	B	9.0	U	9.0	U
SELENIUM	UG/KG	CAC METALS	1.0	U	1.0	U	1.0	U	1.2	B	1.3	B
SILVER	UG/KG	CAC METALS	3.0	U	3.0	U	5.8	B	4.4	B	6.2	B
THALLIUM	UG/KG	CAC METALS	1.0	U	1.0	U	2.0	U	1.0	U	1.0	U
VANADIUM	UG/KG	CAC METALS	3.0	U	3.0	U	3.0	U	6.2	B	7.4	B
ZINC	UG/KG	CAC METALS	11.0	B	62.5		419		60.6		634	
CAC WET EXTRACTION	DATE	CAC WET EX										
COPPER	MG/L	CAC WET EX										
LEAD	MG/L	CAC WET EX										

NAVSTA-SAN DIEGO
SITE 2 SOILS

		SAMPLE NUMBER:	NS2-ER-02/15/91		NS2-ER-2-13-91		NS2-ER-2-4-91		NS2-ER-2-5-91		NS2-ER-2-6-91	
		SAMPLING DATE:	02/15/91		02/13/91		02/04/91		02/05/91		02/06/91	
		BORING:	ER		ER		ER		ER		ER	
		SITE:	NS2		NS2		NS2		NS2		NS2	
		DEPTH:	NS2-ER-02/15/91		13-91		4-91		5-91		6-91	
COMPOUND NAME	UNITS	TEST CODE	RESULT	QUALIFIER	RESULT	QUALIFIER	RESULT	QUALIFIER	RESULT	QUALIFIER	RESULT	QUALIFIER
MERCURY	MG/L	CAC WET EX										
TOTAL CYANIDE	MG/KG	CN										
TOTAL CYANIDE	MG/L	CN					0.02	U	0.010	U	0.02	U
4,4'-DDD	UG/KG	PEST / PCB	0.1	U	0.1	U	0.4	U				
4,4'-DDE	UG/KG	PEST / PCB	0.1	U	0.1	U	0.4	U	0.10	U	0.1	U
4,4'-DDT	UG/KG	PEST / PCB	0.1	U	0.1	U	0.4	U	0.10	U	0.1	U
ALDRIN	UG/KG	PEST / PCB	0.05	U	0.05	U	0.2	U	0.05	U	0.05	U
ALPHA CHLORDANE	UG/KG	PEST / PCB										
ALPHA-BHC	UG/KG	PEST / PCB	0.05	U	0.05	U	0.2	U	0.05	U	0.05	U
ALPHA-CHLORDANE	UG/KG	PEST / PCB	0.5	U	0.5	U	2	U	0.50	U	0.5	U
BETA-BHC	UG/KG	PEST / PCB	0.05	U	0.05	U	0.2	U	0.05	U	0.05	U
CHLORDANE	UG/KG	PEST / PCB										
DELTA-BHC	UG/KG	PEST / PCB	0.05	U	0.05	U	0.2	U	0.05	U	0.05	U
DIELDRIN	UG/KG	PEST / PCB	0.1	U	0.1	U	0.4	U	0.10	U	0.1	U
ENDOSULFAN I	UG/KG	PEST / PCB	0.05	U	0.05	U	0.2	U	0.05	U	0.05	U
ENDOSULFAN II	UG/KG	PEST / PCB	0.1	U	0.1	U	0.4	U	0.10	U	0.1	U
ENDOSULFAN SULFATE	UG/KG	PEST / PCB	0.1	U	0.1	U	0.4	U	0.10	U	0.1	U
ENDRIN	UG/KG	PEST / PCB	0.1	U	0.1	U	0.4	U	0.10	U	0.1	U
ENDRIN KETONE	UG/KG	PEST / PCB	0.1	U	0.1	U	0.4	U	0.10	U	0.1	U
GAMMA CHLORDANE	UG/KG	PEST / PCB										
GAMMA-BHC (LINDANE)	UG/KG	PEST / PCB	0.05	U	0.05	U	0.2	U	0.05	U	0.05	U
GAMMA-CHLORDANE	UG/KG	PEST / PCB	0.5	U	0.5	U	2	U	0.50	U	0.5	U
HEPTACHLOR	UG/KG	PEST / PCB	0.05	U	0.05	U	0.2	U	0.05	U	0.05	U
HEPTACHLOR EPOXIDE	UG/KG	PEST / PCB	0.05	U	0.05	U	0.2	U	0.05	U	0.05	U
METHOXYCHLOR	UG/KG	PEST / PCB	0.5	U	0.5	U	2	U	0.50	U	0.5	U
PCB-1016	UG/KG	PEST / PCB	0.5	U	0.5	U	2	U	0.50	U	0.5	U
PCB-1221	UG/KG	PEST / PCB	0.5	U	0.5	U	2	U	0.50	U	0.5	U
PCB-1232	UG/KG	PEST / PCB	0.5	U	0.5	U	2	U	0.50	U	0.5	U
PCB-1242	UG/KG	PEST / PCB	0.5	U	0.5	U	2	U	0.50	U	0.5	U
PCB-1248	UG/KG	PEST / PCB	0.5	U	0.5	U	2	U	0.50	U	0.5	U
PCB-1254	UG/KG	PEST / PCB	1	U	1	U	4	U	1.00	U	1	U
PCB-1260	UG/KG	PEST / PCB	1	U	1	U	4	U	1.00	U	1	U
TOXAPHENE	UG/KG	PEST / PCB	1	U	1	U	4	U	1.00	U	1	U
DIESEL	MG/KG	TPHC										
HYDRAULIC OIL	MG/KG	TPHC										
MOTOR OIL	MG/KG	TPHC										
STODDARD	MG/KG	TPHC										
DIESEL	UG/KG	TPHC	250	U	250	U	250	U	330		250	U
HYDRAULIC OIL	UG/KG	TPHC	250	U	250	U	250	U	250	U	500	Z
MOTOR OIL	UG/KG	TPHC	250	U	800	Z	250	U	250	U	440	Z
STODDARD	UG/KG	TPHC	250	U	250	U	250	U	250	U	250	U
1,1,1-TRICHLOROETHANE	UG/KG	VOA	5	U	5	U	5	U	5	U	5	U
1,1,2,2-TETRACHLOROETHANE	UG/KG	VOA	5	U	5	U	5	U	5	U	5	U
1,1,2-TRICHLOROETHANE	UG/KG	VOA	5	U	5	U	5	U	5	U	5	U
1,1-DICHLOROETHANE	UG/KG	VOA	5	U	5	U	5	U	5	U	5	U
1,1-DICHLOROETHENE	UG/KG	VOA	5	U	5	U	5	U	5	U	5	U
1,2-DICHLOROETHANE	UG/KG	VOA	5	U	5	U	5	U	5	U	5	U
1,2-DICHLOROETHENE (TOTAL)	UG/KG	VOA	5	U	5	U	5	U	5	U	5	U
1,2-DICHLOROPROPANE	UG/KG	VOA	5	U	5	U	5	U	5	U	5	U
2-BUTANONE	UG/KG	VOA	10	U	10	U	10	U	3	J	10	U
2-HEXANONE	UG/KG	VOA	10	U	10	U	10	U	10	U	10	U

NAVSTA-SAN DIEGO
SITE 2 SOILS

		SAMPLE NUMBER:	NS2-ER-02/15/91		NS2-ER-2-13-91		NS2-ER-2-4-91		NS2-ER-2-5-91		NS2-ER-2-6-91	
		SAMPLING DATE:	02/15/91		02/13/91		02/04/91		02/05/91		02/06/91	
		BORING:	ER		ER		ER		ER		ER	
		SITE:	NS2		NS2		NS2		NS2		NS2	
		DEPTH:	NS2-ER-02/15/91		13-91		4-91		5-91		6-91	
COMPOUND NAME	UNITS	TEST CODE	RESULT	QUALIFIER	RESULT	QUALIFIER	RESULT	QUALIFIER	RESULT	QUALIFIER	RESULT	QUALIFIER
4-METHYL-2-PENTANONE	UG/KG	VOA	10	U	10	U	10	U	10	U	10	U
ACETONE	UG/KG	VOA	10	U	18		13	B	10	U	10	U
BENZENE	UG/KG	VOA	5	U	5	U	5	U	5	U	5	U
BROMODICHLOROMETHANE	UG/KG	VOA	8		3	J	6		15		15	
BROMOFORM	UG/KG	VOA	2	J	1	J	2	J	5		5	
BROMOMETHANE	UG/KG	VOA	10	U	10	U	10	U	10	U	10	U
CARBON DISULFIDE	UG/KG	VOA	5	U	5	U	5	U	5	U	5	U
CARBON TETRACHLORIDE	UG/KG	VOA	5	U	5	U	5	U	5	U	5	U
CHLOROBENZENE	UG/KG	VOA	5	U	5	U	5	U	5	U	5	U
CHLOROETHANE	UG/KG	VOA	10	U	10	U	10	U	10	U	10	U
CHLOROFORM	UG/KG	VOA	16		9		3	J	15		17	
CHLOROMETHANE	UG/KG	VOA	10	U	10	U	10	U	10	U	10	U
CIS-1,3-DICHLOROPROPENE	UG/KG	VOA	5	U	5	U	5	U	5	U	5	U
DIBROMOCHLOROMETHANE	UG/KG	VOA	7		4	J	7		16		16	
ETHYLBENZENE	UG/KG	VOA	5	U	5	U	5	U	5	U	5	U
METHYLENE CHLORIDE	UG/KG	VOA	4	BJ	5	B	3	BJ	2	BJ	1	BJ
STYRENE	UG/KG	VOA	5	U	5	U	5	U	5	U	5	U
TETRACHLOROETHENE	UG/KG	VOA	5	U	5	U	5	U	5	U	5	U
TOLUENE	UG/KG	VOA	2	J	5	U	5	U	2	J	5	U
TRANS-1,3-DICHLOROPROPENE	UG/KG	VOA	5	U	5	U	5	U	5	U	5	U
TRICHLOROETHENE	UG/KG	VOA	5	U	5	U	5	U	5	U	5	U
VINYL ACETATE	UG/KG	VOA	10	U	10	U	10	U	10	U	10	U
VINYL CHLORIDE	UG/KG	VOA	10	U	10	U	10	U	10	U	10	U
XYLENES (TOTAL)	UG/KG	VOA	5	U	5	U	5	U	5	U	5	U

NAVSTA-SAN DIEGO
SITE 2 SOILS

		SAMPLE NUMBER:	NS2-ER-2-7-91		NS2-FB-2-5-91		NS2-FB-2-7-91		NS2-MW10-S01-5		NS2-MW10-S02-10	
		SAMPLING DATE:	02/07/91		02/05/91		02/07/91		02/04/91		02/04/91	
		BORING:	ER		FB		FB		MW10		MW10	
		SITE:	NS2		NS2		NS2		NS2		NS2	
		DEPTH:	7-91		5-91		7-91		5		10	
COMPOUND NAME	UNITS	TEST CODE	RESULT	QUALIFIER	RESULT	QUALIFIER	RESULT	QUALIFIER	RESULT	QUALIFIER	RESULT	QUALIFIER
1,2,4-TRICHLOROBENZENE	UG/KG	BNA	10	U	10	U	10	U	720	U	350	U
1,2-DICHLOROBENZENE	UG/KG	BNA	10	U	10	U	10	U	720	U	350	U
1,3-DICHLOROBENZENE	UG/KG	BNA	10	U	10	U	10	U	720	U	350	U
1,4-DICHLOROBENZENE	UG/KG	BNA	10	U	10	U	10	U	720	U	350	U
2,4,5-TRICHLOROPHENOL	UG/KG	BNA	50	U	50	U	50	U	3500	U	1700	U
2,4,6-TRICHLOROPHENOL	UG/KG	BNA	10	U	10	U	10	U	720	U	350	U
2,4-DICHLOROPHENOL	UG/KG	BNA	10	U	10	U	10	U	720	U	350	U
2,4-DIMETHYLPHENOL	UG/KG	BNA	10	U	10	U	10	U	720	U	350	U
2,4-DINITROPHENOL	UG/KG	BNA	50	U	50	U	50	U	3500	U	1700	U
2,4-DINITROTOLUENE	UG/KG	BNA	10	U	10	U	10	U	720	U	350	U
2,6-DINITROTOLUENE	UG/KG	BNA	10	U	10	U	10	U	720	U	350	U
2-CHLORONAPHTHALENE	UG/KG	BNA	10	U	10	U	10	U	720	U	350	U
2-CHLOROPHENOL	UG/KG	BNA	10	U	10	U	10	U	720	U	350	U
2-METHYLNAPHTHALENE	UG/KG	BNA	10	U	10	U	10	U	720	U	350	U
2-METHYLPHENOL	UG/KG	BNA	10	U	10	U	10	U	720	U	350	U
2-NITROANILINE	UG/KG	BNA	50	U	50	U	50	U	3500	U	1700	U
2-NITROPHENOL	UG/KG	BNA	10	U	10	U	10	U	720	U	350	U
3,3'-DICHLOROBENZIDINE	UG/KG	BNA	20	U	20	U	20	U	1400	U	690	U
3-NITROANILINE	UG/KG	BNA	50	U	50	U	50	U	3500	U	1700	U
4,6-DINITRO-2-METHYLPHENOL	UG/KG	BNA	50	U	50	U	50	U	3500	U	1700	U
4-BROMOPHENYL-PHENYLETHER	UG/KG	BNA	10	U	10	U	10	U	720	U	350	U
4-CHLORO-3-METHYLPHENOL	UG/KG	BNA	10	U	10	U	10	U	720	U	350	U
4-CHLOROANILINE	UG/KG	BNA	10	U	10	U	10	U	720	U	350	U
4-CHLOROPHENYL-PHENYLETHER	UG/KG	BNA	10	U	10	U	10	U	720	U	350	U
4-METHYLPHENOL	UG/KG	BNA	10	U	10	U	10	U	720	U	350	U
4-NITROANILINE	UG/KG	BNA	50	U	50	U	50	U	3500	U	1700	U
4-NITROPHENOL	UG/KG	BNA	50	U	50	U	50	U	3500	U	1700	U
ACENAPHTHENE	UG/KG	BNA	10	U	10	U	10	U	720	U	350	U
ACENAPHTHYLENE	UG/KG	BNA	10	U	10	U	10	U	720	U	350	U
ANTHRACENE	UG/KG	BNA	10	U	10	U	10	U	170	J	350	U
BENZO(A)ANTHRACENE	UG/KG	BNA	10	U	10	U	10	U	800		350	U
BENZO(A)PYRENE	UG/KG	BNA	10	U	10	U	10	U	520	J	350	U
BENZO(B)FLUORANTHENE	UG/KG	BNA	10	U	10	U	10	U	1200		350	U
BENZO(G,H,I)PERYLENE	UG/KG	BNA	10	U	10	U	10	U	480	J	350	U
BENZO(K)FLUORANTHENE	UG/KG	BNA	10	U	10	U	10	U	1000		350	U
BENZOIC ACID	UG/KG	BNA	50	U	50	U	50	U	3500	U	1700	U
BENZYL ALCOHOL	UG/KG	BNA	10	U	10	U	10	U	720	U	350	U
BIS(2-CHLOROETHOXY)METHANE	UG/KG	BNA	10	U	10	U	10	U	720	U	350	U
BIS(2-CHLOROETHYL)ETHER	UG/KG	BNA	10	U	10	U	10	U	720	U	350	U
BIS(2-CHLOROISOPROPYL)ETHER	UG/KG	BNA	10	U	10	U	10	U	720	U	350	U
BIS(2-ETHYLHEXYL)PHTHALATE	UG/KG	BNA	10	U	10	U	10	U	750		350	U
BUTYLBENZYLPHTHALATE	UG/KG	BNA	10	U	10	U	10	U	720	U	350	U
CHRYSENE	UG/KG	BNA	10	U	10	U	10	U	1400		350	U
DI-N-BUTYLPHTHALATE	UG/KG	BNA	10	U	2	J	10	U	170	J	350	U
DI-N-OCTYLPHTHALATE	UG/KG	BNA	10	U	10	U	10	U	720	U	350	U
DIBENZ(A,H)ANTHRACENE	UG/KG	BNA	10	U	10	U	10	U	190	J	350	U
DIBENZOFURAN	UG/KG	BNA	10	U	10	U	10	U	720	U	350	U
DIETHYLPHTHALATE	UG/KG	BNA	10	U	10	U	10	U	720	U	350	U
DIMETHYLPHTHALATE	UG/KG	BNA	10	U	10	U	10	U	720	U	350	U
FLUORANTHENE	UG/KG	BNA	10	U	10	U	10	U	1800		350	U
FLUORENE	UG/KG	BNA	10	U	10	U	10	U	720	U	350	U

NAVSTA-SAN DIEGO
SITE 2 SOILS

		SAMPLE NUMBER:	NS2-ER-2-7-91		NS2-FB-2-5-91		NS2-FB-2-7-91		NS2-MW10-S01-5		NS2-MW10-S02-10	
		SAMPLING DATE:	02/07/91		02/05/91		02/07/91		02/04/91		02/04/91	
		BORING:	ER		FB		FB		MW10		MW10	
		SITE:	NS2		NS2		NS2		NS2		NS2	
		DEPTH:	7-91		5-91		7-91		5		10	
COMPOUND NAME	UNITS	TEST CODE	RESULT	QUALIFIER	RESULT	QUALIFIER	RESULT	QUALIFIER	RESULT	QUALIFIER	RESULT	QUALIFIER
HEXACHLOROBENZENE	UG/KG	BNA	10	U	10	U	10	U	720	U	350	U
HEXACHLOROBUTADIENE	UG/KG	BNA	10	U	10	U	10	U	720	U	350	U
HEXACHLOROCYCLOPENTADIENE	UG/KG	BNA	10	U	10	U	10	U	720	U	350	U
HEXACHLOROETHANE	UG/KG	BNA	10	U	10	U	10	U	720	U	350	U
INDENO(1,2,3-C,D)PYRENE	UG/KG	BNA	10	U	10	U	10	U	430	J	350	U
ISOPHORONE	UG/KG	BNA	10	U	10	U	10	U	720	U	350	U
N-NITROSO-DI-N-PROPYLAMINE	UG/KG	BNA	10	U	10	U	10	U	720	U	350	U
N-NITROSODIPHENYLAMINE (1)	UG/KG	BNA	10	U	1	J	10	U	720	U	350	U
NAPHTHALENE	UG/KG	BNA	10	U	10	U	10	U	720	U	350	U
NITROBENZENE	UG/KG	BNA	10	U	10	U	10	U	720	U	350	U
PENTACHLOROPHENOL	UG/KG	BNA	50	U	50	U	50	U	3500	U	1700	U
PHENANTHRENE	UG/KG	BNA	10	U	10	U	10	U	1100		350	U
PHENOL	UG/KG	BNA	10	U	6	J	3	J	120	J	350	U
PYRENE	UG/KG	BNA	10	U	10	U	10	U	2100		350	U
ANTIMONY	MG/KG	CAC METALS							8.1	B	3.9	U
ARSENIC	MG/KG	CAC METALS							5.8		1.9	B
BARIUM	MG/KG	CAC METALS							96.3		39.5	B
BERYLLIUM	MG/KG	CAC METALS							1.6		0.94	B
CADMIUM	MG/KG	CAC METALS							0.82	U	0.82	U
CHROMIUM	MG/KG	CAC METALS							54.7		7.3	
COBALT	MG/KG	CAC METALS							7.0	B	6.0	B
COPPER	MG/KG	CAC METALS							893		17.6	
LEAD	MG/KG	CAC METALS							286		1.4	
MERCURY	MG/KG	CAC METALS							4.5		0.05	U
MOLYBDENUM	MG/KG	CAC METALS							1.4	U	1.4	U
NICKEL	MG/KG	CAC METALS							19.3		1.8	U
SELENIUM	MG/KG	CAC METALS							0.30	B	0.21	U
SILVER	MG/KG	CAC METALS							0.96	B	0.67	B
THALLIUM	MG/KG	CAC METALS							0.61	B	0.47	B
VANADIUM	MG/KG	CAC METALS							59.2		21.2	
ZINC	MG/KG	CAC METALS							781		29.6	
ANTIMONY	UG/KG	CAC METALS	19.0	U	19.0	U	19.0	U				
ARSENIC	UG/KG	CAC METALS	2.0	U	2.0	U	2.0	U				
BARIUM	UG/KG	CAC METALS	4.0	U	7.4	B	4.0	U				
BERYLLIUM	UG/KG	CAC METALS	1.0	U	1.0	U	1.0	U				
CADMIUM	UG/KG	CAC METALS	4.0	U	4.0	U	4.0	U				
CHROMIUM	UG/KG	CAC METALS	4.0	U	4.0	U	4.0	U				
COBALT	UG/KG	CAC METALS	5.0	U	5.0	U	5.0	U				
COPPER	UG/KG	CAC METALS	11.3	B	21.9	B	12.6	B				
LEAD	UG/KG	CAC METALS	3.3		4.1		4.9					
MERCURY	UG/KG	CAC METALS	0.20	U	0.20	U	0.20	U				
MOLYBDENUM	UG/KG	CAC METALS	7.0	U	7.0	U	7.0	U				
NICKEL	UG/KG	CAC METALS	9.0	U	9.0	U	9.0	U				
SELENIUM	UG/KG	CAC METALS	1.0	U	1.3	B	1.0	U				
SILVER	UG/KG	CAC METALS	3.0	U	4.0	B	3.0	U				
THALLIUM	UG/KG	CAC METALS	1.0	U	1.0	U	1.0	U				
VANADIUM	UG/KG	CAC METALS	3.0	U	6.2	B	3.0	U				
ZINC	UG/KG	CAC METALS	235		84.1		95.1					
CAC WET EXTRACTION	DATE	CAC WET EX										
COPPER	MG/L	CAC WET EX							29.9			
LEAD	MG/L	CAC WET EX							0.075	U		

NAVSTA-SAN DIEGO
SITE 2 SOILS

		SAMPLE NUMBER:	NS2-ER-2-7-91		NS2-FB-2-5-91		NS2-FB-2-7-91		NS2-MW10-S01-5		NS2-MW10-S02-10	
		SAMPLING DATE:	02/07/91		02/05/91		02/07/91		02/04/91		02/04/91	
		BORING:	ER		FB		FB		MW10		MW10	
		SITE:	NS2		NS2		NS2		NS2		NS2	
		DEPTH:	7-91		5-91		7-91		5		10	
COMPOUND NAME	UNITS	TEST CODE	RESULT	QUALIFIER	RESULT	QUALIFIER	RESULT	QUALIFIER	RESULT	QUALIFIER	RESULT	QUALIFIER
MERCURY	MG/L	CAC WET EX							0.0039			
TOTAL CYANIDE	MG/KG	CN							1	UJ	1	UJ
TOTAL CYANIDE	MG/L	CN			0.010	U						
4,4'-DDD	UG/KG	PEST / PCB	0.1	U			0.1	U	170	U	17	U
4,4'-DDE	UG/KG	PEST / PCB	0.1	U	0.10	U	0.1	U	170	U	17	U
4,4'-DDT	UG/KG	PEST / PCB	0.1	U	0.10	U	0.1	U	140	J	17	U
ALDRIN	UG/KG	PEST / PCB	0.05	U	0.05	U	0.05	U	87	U	8.4	U
ALPHA CHLORDANE	UG/KG	PEST / PCB										
ALPHA-BHC	UG/KG	PEST / PCB	0.05	U	0.05	U	0.05	U	87	U	8.4	U
ALPHA-CHLORDANE	UG/KG	PEST / PCB	0.5	U	0.50	U	0.5	U	870	U	84	U
BETA-BHC	UG/KG	PEST / PCB	0.05	U	0.05	U	0.05	U	87	U	8.4	U
CHLORDANE	UG/KG	PEST / PCB										
DELTA-BHC	UG/KG	PEST / PCB	0.05	U	0.05	U	0.05	U	87	U	8.4	U
DIELDRIN	UG/KG	PEST / PCB	0.1	U	0.10	U	0.1	U	170	U	17	U
ENDOSULFAN I	UG/KG	PEST / PCB	0.05	U	0.05	U	0.05	U	87	U	8.4	U
ENDOSULFAN II	UG/KG	PEST / PCB	0.1	U	0.10	U	0.1	U	170	U	17	U
ENDOSULFAN SULFATE	UG/KG	PEST / PCB	0.1	U	0.10	U	0.1	U	170	U	17	U
ENDRIN	UG/KG	PEST / PCB	0.1	U	0.10	U	0.1	U	170	U	17	U
ENDRIN KETONE	UG/KG	PEST / PCB	0.1	U	0.10	U	0.1	U	170	U	17	U
GAMMA CHLORDANE	UG/KG	PEST / PCB										
GAMMA-BHC (LINDANE)	UG/KG	PEST / PCB	0.05	U	0.05	U	0.05	U	87	U	8.4	U
GAMMA-CHLORDANE	UG/KG	PEST / PCB	0.5	U	0.50	U	0.5	U	870	U	84	U
HEPTACHLOR	UG/KG	PEST / PCB	0.05	U	0.05	U	0.05	U	87	U	8.4	U
HEPTACHLOR EPOXIDE	UG/KG	PEST / PCB	0.05	U	0.05	U	0.05	U	87	U	8.4	U
METHOXYCHLOR	UG/KG	PEST / PCB	0.5	U	0.50	U	0.5	U	870	U	84	U
PCB-1016	UG/KG	PEST / PCB	0.5	U	0.50	U	0.5	U	870	U	84	U
PCB-1221	UG/KG	PEST / PCB	0.5	U	0.50	U	0.5	U	870	U	84	U
PCB-1232	UG/KG	PEST / PCB	0.5	U	0.50	U	0.5	U	870	U	84	U
PCB-1242	UG/KG	PEST / PCB	0.5	U	0.50	U	0.5	U	870	U	84	U
PCB-1248	UG/KG	PEST / PCB	0.5	U	0.50	U	0.5	U	870	U	84	U
PCB-1254	UG/KG	PEST / PCB	1	U	1.00	U	1	U	1700	U	170	U
PCB-1260	UG/KG	PEST / PCB	1	U	1.00	U	1	U	1700	U	170	U
TOXAPHENE	UG/KG	PEST / PCB	1	U	1.00	U	1	U	1700	U	170	U
DIESEL	MG/KG	TPHC							190		10	U
HYDRAULIC OIL	MG/KG	TPHC							10	U	10	U
MOTOR OIL	MG/KG	TPHC							10	U	10	U
STODDARD	MG/KG	TPHC							10	U	10	U
DIESEL	UG/KG	TPHC	250	U	250	U	250	U				
HYDRAULIC OIL	UG/KG	TPHC	250	U	250	U	250	U				
MOTOR OIL	UG/KG	TPHC	250	U	250	U	250	U				
STODDARD	UG/KG	TPHC	250	U	250	U	250	U				
1,1,1-TRICHLOROETHANE	UG/KG	VOA	5	U	5	U	5	U	5	U	5	U
1,1,2,2-TETRACHLOROETHANE	UG/KG	VOA	5	U	5	U	5	U	5	U	5	U
1,1,2-TRICHLOROETHANE	UG/KG	VOA	5	U	5	U	5	U	5	U	5	U
1,1-DICHLOROETHANE	UG/KG	VOA	5	U	5	U	5	U	5	U	5	U
1,1-DICHLOROETHENE	UG/KG	VOA	5	U	5	U	5	U	5	U	5	U
1,2-DICHLOROETHANE	UG/KG	VOA	5	U	5	U	5	U	5	U	5	U
1,2-DICHLOROETHENE (TOTAL)	UG/KG	VOA	5	U	5	U	5	U	5	U	5	U
1,2-DICHLOROPROPANE	UG/KG	VOA	5	U	5	U	5	U	5	U	5	U
2-BUTANONE	UG/KG	VOA	10	U	10	U	10	U	11	U	11	U
2-HEXANONE	UG/KG	VOA	10	U	10	U	10	U	11	U	11	U

NAVSTA-SAN DIEGO
SITE 2 SOILS

		SAMPLE NUMBER:	NS2-ER-2-7-91		NS2-FB-2-5-91		NS2-FB-2-7-91		NS2-MW10-S01-5		NS2-MW10-S02-10	
		SAMPLING DATE:	02/07/91		02/05/91		02/07/91		02/04/91		02/04/91	
		BORING:	ER		FB		FB		MW10		MW10	
		SITE:	NS2		NS2		NS2		NS2		NS2	
		DEPTH:	7-91		5-91		7-91		5		10	
COMPOUND NAME	UNITS	TEST CODE	RESULT	QUALIFIER	RESULT	QUALIFIER	RESULT	QUALIFIER	RESULT	QUALIFIER	RESULT	QUALIFIER
4-METHYL-2-PENTANONE	UG/KG	VOA	10	U	10	U	10	U	11	U	11	U
ACETONE	UG/KG	VOA	10	U	11	B	6	J	11	U	11	U
BENZENE	UG/KG	VOA	5	U	5	U	5	U	5	U	5	U
BROMODICHLOROMETHANE	UG/KG	VOA	11		5	U	4	J	5	U	5	U
BROMOFORM	UG/KG	VOA	5		2	J	2	J	5	U	5	U
BROMOMETHANE	UG/KG	VOA	10	U	10	U	10	U	11	U	11	U
CARBON DISULFIDE	UG/KG	VOA	5	U	5	U	5	U	5	U	5	U
CARBON TETRACHLORIDE	UG/KG	VOA	5	U	5	U	5	U	5	U	5	U
CHLOROBENZENE	UG/KG	VOA	5	U	5	U	5	U	5	U	5	U
CHLOROETHANE	UG/KG	VOA	10	U	10	U	10	U	11	U	11	U
CHLOROFORM	UG/KG	VOA	9		3	J	2	J	5	U	5	U
CHLOROMETHANE	UG/KG	VOA	10	U	10	U	10	U	11	U	11	U
CIS-1,3-DICHLOROPROPENE	UG/KG	VOA	5	U	5	U	5	U	5	U	5	U
DIBROMOCHLOROMETHANE	UG/KG	VOA	14		6		5		5	U	5	U
ETHYLBENZENE	UG/KG	VOA	5	U	5	U	5	U	5	U	5	U
METHYLENE CHLORIDE	UG/KG	VOA	2	BJ	2	BJ	2	BJ	8	U	5	U
STYRENE	UG/KG	VOA	5	U	5	U	5	U	5	U	5	U
TETRACHLOROETHENE	UG/KG	VOA	5	U	5	U	5	U	5	U	5	U
TOLUENE	UG/KG	VOA	5	U	2	J	5	U	2	J	5	U
TRANS-1,3-DICHLOROPROPENE	UG/KG	VOA	5	U	5	U	5	U	5	U	5	U
TRICHLOROETHENE	UG/KG	VOA	5	U	5	U	5	U	5	U	5	U
VINYL ACETATE	UG/KG	VOA	10	U	10	U	10	U	11	U	11	U
VINYL CHLORIDE	UG/KG	VOA	10	U	10	U	10	U	11	U	11	U
XYLENES (TOTAL)	UG/KG	VOA	5	U	5	U	5	U	5	U	5	U

NAVSTA-SAN DIEGO
SITE 2 SOILS

		SAMPLE NUMBER:	NS2-MW10-S03-15		NS2-MW11-S01-5		NS2-MW11-S02-10		NS2-MW11-S03-15		NS2-MW12-S01-5	
		SAMPLING DATE:	02/04/91		02/07/91		02/07/91		02/07/91		02/07/91	
		BORING:	MW10		MW11		MW11		MW11		MW12	
		SITE:	NS2		NS2		NS2		NS2		NS2	
		DEPTH:	15		5		10		15		5	
COMPOUND NAME	UNITS	TEST CODE	RESULT	QUALIFIER	RESULT	QUALIFIER	RESULT	QUALIFIER	RESULT	QUALIFIER	RESULT	QUALIFIER
1,2,4-TRICHLOROBENZENE	UG/KG	BNA	26000	UR	380	U	410	U	430	U	340	UR
1,2-DICHLOROBENZENE	UG/KG	BNA	26000	UR	380	U	410	U	430	U	340	UR
1,3-DICHLOROBENZENE	UG/KG	BNA	26000	UR	380	U	410	U	430	U	340	UR
1,4-DICHLOROBENZENE	UG/KG	BNA	26000	UR	380	U	410	U	430	U	340	UR
2,4,5-TRICHLOROPHENOL	UG/KG	BNA	120000	UR	1800	U	2000	U	2100	U	1600	UR
2,4,6-TRICHLOROPHENOL	UG/KG	BNA	26000	UR	380	U	410	U	430	U	340	UR
2,4-DICHLOROPHENOL	UG/KG	BNA	26000	UR	380	U	410	U	430	U	340	UR
2,4-DIMETHYLPHENOL	UG/KG	BNA	26000	UR	380	U	410	U	430	U	340	UR
2,4-DINITROPHENOL	UG/KG	BNA	120000	UR	1800	U	2000	U	2100	U	1600	UR
2,4-DINITROTOLUENE	UG/KG	BNA	26000	UR	380	U	410	U	430	U	340	UR
2,6-DINITROTOLUENE	UG/KG	BNA	26000	UR	380	U	410	U	430	U	340	UR
2-CHLORONAPHTHALENE	UG/KG	BNA	26000	UR	380	U	410	U	430	U	340	UR
2-CHLOROPHENOL	UG/KG	BNA	26000	UR	380	U	410	U	430	U	340	UR
2-METHYLNAPHTHALENE	UG/KG	BNA	67000	J	380	U	410	U	430	U	340	UR
2-METHYLPHENOL	UG/KG	BNA	26000	UR	380	U	410	U	430	U	340	UR
2-NITROANILINE	UG/KG	BNA	120000	UR	1800	U	2000	U	2100	U	1600	UR
2-NITROPHENOL	UG/KG	BNA	26000	UR	380	U	410	U	430	U	340	UR
3,3'-DICHLOROBENZIDINE	UG/KG	BNA	51000	UR	760	U	820	U	860	U	680	UR
3-NITROANILINE	UG/KG	BNA	120000	UR	1800	U	2000	U	2100	U	1600	UR
4,6-DINITRO-2-METHYLPHENOL	UG/KG	BNA	120000	UR	1800	U	2000	U	2100	U	1600	UR
4-BROMOPHENYL-PHENYLETHER	UG/KG	BNA	26000	UR	380	U	410	U	430	U	340	UR
4-CHLORO-3-METHYLPHENOL	UG/KG	BNA	26000	UR	380	U	410	U	430	U	340	UR
4-CHLOROANILINE	UG/KG	BNA	26000	UR	380	U	410	U	430	U	340	UR
4-CHLOROPHENYL-PHENYLETHER	UG/KG	BNA	26000	UR	380	U	410	U	430	U	340	UR
4-METHYLPHENOL	UG/KG	BNA	26000	UR	380	U	410	U	430	U	340	UR
4-NITROANILINE	UG/KG	BNA	120000	UR	1800	U	2000	U	2100	U	1600	UR
4-NITROPHENOL	UG/KG	BNA	120000	UR	1800	U	2000	U	2100	U	1600	UR
ACENAPHTHENE	UG/KG	BNA	26000	UR	380	U	410	U	430	U	340	UR
ACENAPHTHYLENE	UG/KG	BNA	26000	UR	380	U	410	U	430	U	340	UR
ANTHRACENE	UG/KG	BNA	26000	UR	380	U	410	U	430	U	340	UR
BENZO(A)ANTHRACENE	UG/KG	BNA	26000	UR	380	U	410	U	430	U	340	UR
BENZO(A)PYRENE	UG/KG	BNA	26000	UR	380	U	410	U	430	U	340	UR
BENZO(B)FLUORANTHENE	UG/KG	BNA	26000	UR	380	U	410	U	430	U	340	UR
BENZO(G,H,I)PERYLENE	UG/KG	BNA	26000	UR	380	U	410	U	430	U	340	UR
BENZO(K)FLUORANTHENE	UG/KG	BNA	26000	UR	380	U	410	U	430	U	340	UR
BENZOIC ACID	UG/KG	BNA	120000	UR	1800	U	2000	U	2100	U	1600	UR
BENZYL ALCOHOL	UG/KG	BNA	26000	UR	380	U	410	U	430	U	340	UR
BIS(2-CHLOROETHOXY)METHANE	UG/KG	BNA	26000	UR	380	U	410	U	430	U	340	UR
BIS(2-CHLOROETHYL)ETHER	UG/KG	BNA	26000	UR	380	U	410	U	430	U	340	UR
BIS(2-CHLOROISOPROPYL)ETHER	UG/KG	BNA	26000	UR	380	U	410	U	430	U	340	UR
BIS(2-ETHYLHEXYL)PHTHALATE	UG/KG	BNA	26000	UR	380	U	410	U	430	U	340	UR
BUTYLBENZYLPHTHALATE	UG/KG	BNA	26000	UR	380	U	410	U	430	U	340	UR
CHRYSENE	UG/KG	BNA	26000	UR	380	U	410	U	430	U	340	UR
DI-N-BUTYLPHTHALATE	UG/KG	BNA	26000	UR	380	U	410	U	430	U	340	UR
DI-N-OCTYLPHTHALATE	UG/KG	BNA	26000	UR	380	U	410	U	430	U	340	UR
DIBENZ(A,H)ANTHRACENE	UG/KG	BNA	26000	UR	380	U	410	U	430	U	340	UR
DIBENZOFURAN	UG/KG	BNA	26000	UR	380	U	410	U	430	U	340	UR
DIETHYLPHTHALATE	UG/KG	BNA	26000	UR	380	U	410	U	120	J	340	UR
DIMETHYLPHTHALATE	UG/KG	BNA	26000	UR	380	U	410	U	430	U	340	UR
FLUORANTHENE	UG/KG	BNA	26000	UR	380	U	410	U	430	U	340	UR
FLUORENE	*UG/KG*	BNA	7400	J	380	U	410	U	430	U	340	UR

NAVSTA-SAN DIEGO
SITE 2 SOILS

		SAMPLE NUMBER:	NS2-MW10-S03-15		NS2-MW11-S01-5		NS2-MW11-S02-10		NS2-MW11-S03-15		NS2-MW12-S01-5	
		SAMPLING DATE:	02/04/91		02/07/91		02/07/91		02/07/91		02/07/91	
		BORING:	MW10		MW11		MW11		MW11		MW12	
		SITE:	NS2		NS2		NS2		NS2		NS2	
		DEPTH:	15		5		10		15		5	
COMPOUND NAME	UNITS	TEST CODE	RESULT	QUALIFIER	RESULT	QUALIFIER	RESULT	QUALIFIER	RESULT	QUALIFIER	RESULT	QUALIFIER
HEXACHLOROBENZENE	UG/KG	BNA	26000	UR	380	U	410	U	430	U	340	UR
HEXACHLOROBUTADIENE	UG/KG	BNA	26000	UR	380	U	410	U	430	U	340	UR
HEXACHLOROCYCLOPENTADIENE	UG/KG	BNA	26000	UR	380	U	410	U	430	U	340	UR
HEXACHLOROETHANE	UG/KG	BNA	26000	UR	380	U	410	U	430	U	340	UR
INDENO(1,2,3-C,D)PYRENE	UG/KG	BNA	26000	UR	380	U	410	U	430	U	340	UR
ISOPHORONE	UG/KG	BNA	26000	UR	380	U	410	U	430	U	340	UR
N-NITROSO-DI-N-PROPYLAMINE	UG/KG	BNA	26000	UR	380	U	410	U	430	U	340	UR
N-NITROSODIPHENYLAMINE (1)	UG/KG	BNA	26000	UR	380	U	410	U	430	U	340	UR
NAPHTHALENE	UG/KG	BNA	25000	J	380	U	410	U	430	U	340	UR
NITROBENZENE	UG/KG	BNA	26000	UR	380	U	410	U	430	U	340	UR
PENTACHLOROPHENOL	UG/KG	BNA	120000	UR	1800	U	2000	U	2100	U	1600	UR
PHENANTHRENE	UG/KG	BNA	12000	J	380	U	410	U	430	U	340	UR
PHENOL	UG/KG	BNA	26000	UR	380	U	410	U	430	U	340	UR
PYRENE	UG/KG	BNA	26000	UR	380	U	410	U	430	U	340	UR
ANTIMONY	MG/KG	CAC METALS	4.7	UJ	4.0	U	8.5	B	7.3	B	3.8	UJ
ARSENIC	MG/KG	CAC METALS	0.25	UJ	1.2	B	1.5	B	2.1	B	1.6	BJ
BARIUM	MG/KG	CAC METALS	66.4		55.7		67.8		107		7.6	U
BERYLLIUM	MG/KG	CAC METALS	0.96	B	0.69	B	0.95	B	0.92	B	0.20	B
CADMIUM	MG/KG	CAC METALS	0.98	U	0.84	U	0.96	U	0.97	U	0.79	U
CHROMIUM	MG/KG	CAC METALS	7.5		6.8		9.5		13.8		3.3	J
COBALT	MG/KG	CAC METALS	4.4	B	4.2	B	5.6	B	8.8	B	2.1	B
COPPER	MG/KG	CAC METALS	13.6	U	3.5	U	7.0	U	10	U	1.2	U
LEAD	MG/KG	CAC METALS	0.95	UJ	1.9	U	2.2	U	3.0	U	0.64	B
MERCURY	MG/KG	CAC METALS	0.06	U	0.17	U	0.19	U	0.19	U	0.15	U
MOLYBDENUM	MG/KG	CAC METALS	1.7	U	1.5	U	1.9	B	1.9	B	1.4	U
NICKEL	MG/KG	CAC METALS	2.2	U	3.9	B	5.3	B	7.1	B	1.8	U
SELENIUM	MG/KG	CAC METALS	0.25	U	0.22	U	0.23	U	0.25	U	0.19	UJ
SILVER	MG/KG	CAC METALS	0.74	U	0.63	U	0.81	U	1.5	U	0.59	U
THALLIUM	MG/KG	CAC METALS	0.50	U	0.22	U	0.23	U	0.25	U	0.19	UJ
VANADIUM	MG/KG	CAC METALS	28.8		24.3		32.8		48.1		7.3	U
ZINC	MG/KG	CAC METALS	17.1	U	18.8	U	25.9	U	45.4	U	9.3	U
ANTIMONY	UG/KG	CAC METALS										
ARSENIC	UG/KG	CAC METALS										
BARIUM	UG/KG	CAC METALS										
BERYLLIUM	UG/KG	CAC METALS										
CADMIUM	UG/KG	CAC METALS										
CHROMIUM	UG/KG	CAC METALS										
COBALT	UG/KG	CAC METALS										
COPPER	UG/KG	CAC METALS										
LEAD	UG/KG	CAC METALS										
MERCURY	UG/KG	CAC METALS										
MOLYBDENUM	UG/KG	CAC METALS										
NICKEL	UG/KG	CAC METALS										
SELENIUM	UG/KG	CAC METALS										
SILVER	UG/KG	CAC METALS										
THALLIUM	UG/KG	CAC METALS										
VANADIUM	UG/KG	CAC METALS										
ZINC	UG/KG	CAC METALS										
CAC WET EXTRACTION	DATE	CAC WET EX										
COPPER	MG/L	CAC WET EX										
LEAD	MG/L	CAC WET EX										

NAVSTA-SAN DIEGO
SITE 2 SOILS

		SAMPLE NUMBER:	NS2-MW10-S03-15		NS2-MW11-S01-5		NS2-MW11-S02-10		NS2-MW11-S03-15		NS2-MW12-S01-5	
		SAMPLING DATE:	02/04/91		02/07/91		02/07/91		02/07/91		02/07/91	
		BORING:	MW10		MW11		MW11		MW11		MW12	
		SITE:	NS2		NS2		NS2		NS2		NS2	
		DEPTH:	15		5		10		15		5	
COMPOUND NAME	UNITS	TEST CODE	RESULT	QUALIFIER	RESULT	QUALIFIER	RESULT	QUALIFIER	RESULT	QUALIFIER	RESULT	QUALIFIER
MERCURY	MG/L	CAC WET EX										
TOTAL CYANIDE	MG/KG	CN	1	UJ	1	UJ	1	UJ	1	UJ	1	U
TOTAL CYANIDE	MG/L	CN										
4,4'-DDD	UG/KG	PEST / PCB	21	UJ	18	U	20	U	21	U	16	UJ
4,4'-DDE	UG/KG	PEST / PCB	21	UJ	18	U	20	U	21	U	16	UJ
4,4'-DDT	UG/KG	PEST / PCB	21	UJ	18	U	20	U	21	U	16	UJ
ALDRIN	UG/KG	PEST / PCB	10	UJ	9.2	U	10	U	10	U	8.2	UJ
ALPHA CHLORDANE	UG/KG	PEST / PCB										
ALPHA-BHC	UG/KG	PEST / PCB	10	UJ	9.2	U	10	U	10	U	8.2	UJ
ALPHA-CHLORDANE	UG/KG	PEST / PCB	100	UJ	92	U	100	U	100	U	82	UJ
BETA-BHC	UG/KG	PEST / PCB	10	UJ	9.2	U	10	U	10	U	8.2	UJ
CHLORDANE	UG/KG	PEST / PCB										
DELTA-BHC	UG/KG	PEST / PCB	10	UJ	9.2	U	10	U	10	U	8.2	UJ
DIELDRIN	UG/KG	PEST / PCB	21	UJ	18	U	20	U	21	U	16	UJ
ENDOSULFAN I	UG/KG	PEST / PCB	10	UJ	9.2	U	10	U	10	U	8.2	UJ
ENDOSULFAN II	UG/KG	PEST / PCB	21	UJ	18	U	20	U	21	U	16	UJ
ENDOSULFAN SULFATE	UG/KG	PEST / PCB	21	UJ	18	U	20	U	21	U	16	UJ
ENDRIN	UG/KG	PEST / PCB	21	UJ	18	U	20	U	21	U	16	UJ
ENDRIN KETONE	UG/KG	PEST / PCB	21	UJ	18	U	20	U	21	U	16	UJ
GAMMA CHLORDANE	UG/KG	PEST / PCB										
GAMMA-BHC (LINDANE)	UG/KG	PEST / PCB	10	UJ	9.2	U	10	U	10	U	8.2	UJ
GAMMA-CHLORDANE	UG/KG	PEST / PCB	100	UJ	92	U	100	U	100	U	82	UJ
HEPTACHLOR	UG/KG	PEST / PCB	10	UJ	9.2	U	10	U	10	U	8.2	UJ
HEPTACHLOR EPOXIDE	UG/KG	PEST / PCB	10	UJ	9.2	U	10	U	10	U	8.2	UJ
METHOXYCHLOR	UG/KG	PEST / PCB	100	UJ	92	U	100	U	100	U	82	UJ
PCB-1016	UG/KG	PEST / PCB	100	UJ	92	U	100	U	100	U	82	UJ
PCB-1221	UG/KG	PEST / PCB	100	UJ	92	U	100	U	100	U	82	UJ
PCB-1232	UG/KG	PEST / PCB	100	UJ	92	U	100	U	100	U	82	UJ
PCB-1242	UG/KG	PEST / PCB	100	UJ	92	U	100	U	100	U	82	UJ
PCB-1248	UG/KG	PEST / PCB	100	UJ	92	U	100	U	100	U	82	UJ
PCB-1254	UG/KG	PEST / PCB	210	UJ	180	U	200	U	210	U	160	UJ
PCB-1260	UG/KG	PEST / PCB	210	UJ	180	U	200	U	210	U	160	UJ
TOXAPHENE	UG/KG	PEST / PCB	210	UJ	180	U	200	U	210	U	160	UJ
DIESEL	MG/KG	TPHC	16000	D	10	U	10	U	10	U	10	U
HYDRAULIC OIL	MG/KG	TPHC	10	U	10	U	10	U	10	U	10	U
MOTOR OIL	MG/KG	TPHC	10	U	10	U	10	U	14		10	U
STODDARD	MG/KG	TPHC	10	U	10	U	10	U	10	U	10	U
DIESEL	UG/KG	TPHC										
HYDRAULIC OIL	UG/KG	TPHC										
MOTOR OIL	UG/KG	TPHC										
STODDARD	UG/KG	TPHC										
1,1,1-TRICHLOROETHANE	UG/KG	VOA	810	U	6	U	6	U	6	U	5	U
1,1,2,2-TETRACHLOROETHANE	UG/KG	VOA	810	U	6	U	6	U	6	U	5	U
1,1,2-TRICHLOROETHANE	UG/KG	VOA	810	U	6	U	6	U	6	U	5	U
1,1-DICHLOROETHANE	UG/KG	VOA	810	U	6	U	6	U	6	U	5	U
1,1-DICHLOROETHENE	UG/KG	VOA	810	U	6	U	6	U	6	U	5	U
1,2-DICHLOROETHANE	UG/KG	VOA	810	U	6	U	6	U	6	U	5	U
1,2-DICHLOROETHENE (TOTAL)	UG/KG	VOA	810	U	6	U	6	U	6	U	5	U
1,2-DICHLOROPROPANE	UG/KG	VOA	810	U	6	U	6	U	6	U	5	U
2-BUTANONE	UG/KG	VOA	400	J	11	U	12	U	13	U	10	U
2-HEXANONE	UG/KG	VOA	1600	U	11	U	12	U	13	U	10	U

NAVSTA-SAN DIEGO
SITE 2 SOILS

		SAMPLE NUMBER:	NS2-MW10-S03-15		NS2-MW11-S01-5		NS2-MW11-S02-10		NS2-MW11-S03-15		NS2-MW12-S01-5	
		SAMPLING DATE:	02/04/91		02/07/91		02/07/91		02/07/91		02/07/91	
		BORING:	MW10		MW11		MW11		MW11		MW12	
		SITE:	NS2		NS2		NS2		NS2		NS2	
		DEPTH:	15		5		10		15		5	
COMPOUND NAME	UNITS	TEST CODE	RESULT	QUALIFIER	RESULT	QUALIFIER	RESULT	QUALIFIER	RESULT	QUALIFIER	RESULT	QUALIFIER
4-METHYL-2-PENTANONE	UG/KG	VOA	1600	U	11	U	12	U	13	U	10	U
ACETONE	UG/KG	VOA	1600	U	28	U	24	U	15	U	10	U
BENZENE	UG/KG	VOA	810	U	6	U	6	U	6	U	5	U
BROMODICHLOROMETHANE	UG/KG	VOA	810	U	6	U	6	U	6	U	5	U
BROMOFORM	UG/KG	VOA	810	U	6	U	6	U	6	U	5	U
BROMOMETHANE	UG/KG	VOA	1600	U	11	U	12	U	13	U	10	U
CARBON DISULFIDE	UG/KG	VOA	810	U	6	U	6	U	6	U	5	U
CARBON TETRACHLORIDE	UG/KG	VOA	810	U	6	U	6	U	6	U	5	U
CHLOROBENZENE	UG/KG	VOA	810	U	6	U	6	U	6	U	5	U
CHLOROETHANE	UG/KG	VOA	1600	U	11	U	12	U	13	U	10	U
CHLOROFORM	UG/KG	VOA	810	U	6	U	6	U	6	U	5	U
CHLOROMETHANE	UG/KG	VOA	1600	U	11	U	12	U	13	U	10	U
CIS-1,3-DICHLOROPROPENE	UG/KG	VOA	810	U	6	U	6	U	6	U	5	U
DIBROMOCHLOROMETHANE	UG/KG	VOA	810	U	6	U	6	U	6	U	5	U
ETHYLBENZENE	UG/KG	VOA	710	J	6	U	6	U	6	U	5	U
METHYLENE CHLORIDE	UG/KG	VOA	970	U	19	U	11	U	10	U	12	U
STYRENE	UG/KG	VOA	810	U	6	U	6	U	6	U	5	U
TETRACHLOROETHENE	UG/KG	VOA	810	U	6	U	6	U	6	U	5	U
TOLUENE	UG/KG	VOA	810	U	6	U	6	U	6	U	5	U
TRANS-1,3-DICHLOROPROPENE	UG/KG	VOA	810	U	6	U	6	U	6	U	5	U
TRICHLOROETHENE	UG/KG	VOA	810	U	6	U	6	U	6	U	5	U
VINYL ACETATE	UG/KG	VOA	1600	U	11	U	12	U	13	U	10	U
VINYL CHLORIDE	UG/KG	VOA	1600	U	11	U	12	U	13	U	10	U
XYLENES (TOTAL)	UG/KG	VOA	810	U	6	U	6	U	6	U	5	U

NAVSTA-SAN DIEGO
SITE 2 SOILS

		SAMPLE NUMBER:	NS2-MW12-S01-5-FD		NS2-MW12-S02-10		NS2-MW12-S03-15		NS2-TB-02/12/91		NS2-TB-2-13-91 TR	
		SAMPLING DATE:	02/07/91		02/07/91		02/07/91		02/12/91		02/13/91	
		BORING:	MW12		MW12		MW12		TB		TB	
		SITE:	NS2		NS2		NS2		NS2		NS2	
		DEPTH:	5-FD		10		15		NS2-TB-02/12/91		13-91 TRIP	
COMPOUND NAME	UNITS	TEST CODE	RESULT	QUALIFIER	RESULT	QUALIFIER	RESULT	QUALIFIER	RESULT	QUALIFIER	RESULT	QUALIFIER
1,2,4-TRICHLOROBENZENE	UG/KG	BNA	350	U	370	U	430	U				
1,2-DICHLOROBENZENE	UG/KG	BNA	350	U	370	U	430	U				
1,3-DICHLOROBENZENE	UG/KG	BNA	350	U	370	U	430	U				
1,4-DICHLOROBENZENE	UG/KG	BNA	350	U	370	U	430	U				
2,4,5-TRICHLOROPHENOL	UG/KG	BNA	1700	U	1800	U	2100	U				
2,4,6-TRICHLOROPHENOL	UG/KG	BNA	350	U	370	U	430	U				
2,4-DICHLOROPHENOL	UG/KG	BNA	350	U	370	U	430	U				
2,4-DIMETHYLPHENOL	UG/KG	BNA	350	U	370	U	430	U				
2,4-DINITROPHENOL	UG/KG	BNA	1700	U	1800	U	2100	U				
2,4-DINITROTOLUENE	UG/KG	BNA	350	U	370	U	430	U				
2,6-DINITROTOLUENE	UG/KG	BNA	350	U	370	U	430	U				
2-CHLORONAPHTHALENE	UG/KG	BNA	350	U	370	U	430	U				
2-CHLOROPHENOL	UG/KG	BNA	350	U	370	U	430	U				
2-METHYLNAPHTHALENE	UG/KG	BNA	350	U	370	U	430	U				
2-METHYLPHENOL	UG/KG	BNA	350	U	370	U	430	U				
2-NITROANILINE	UG/KG	BNA	1700	U	1800	U	2100	U				
2-NITROPHENOL	UG/KG	BNA	350	U	370	U	430	U				
3,3'-DICHLOROBENZIDINE	UG/KG	BNA	690	U	750	U	870	U				
3-NITROANILINE	UG/KG	BNA	1700	U	1800	U	2100	U				
4,6-DINITRO-2-METHYLPHENOL	UG/KG	BNA	1700	U	1800	U	2100	U				
4-BROMOPHENYL-PHENYLETHER	UG/KG	BNA	350	U	370	U	430	U				
4-CHLORO-3-METHYLPHENOL	UG/KG	BNA	350	U	370	U	430	U				
4-CHLOROANILINE	UG/KG	BNA	350	UJ	370	U	430	U				
4-CHLOROPHENYL-PHENYLETHER	UG/KG	BNA	350	U	370	U	430	U				
4-METHYLPHENOL	UG/KG	BNA	350	U	370	U	430	U				
4-NITROANILINE	UG/KG	BNA	1700	U	1800	U	2100	U				
4-NITROPHENOL	UG/KG	BNA	1700	U	1800	U	2100	U				
ACENAPHTHENE	UG/KG	BNA	350	U	370	U	430	U				
ACENAPHTHYLENE	UG/KG	BNA	350	U	370	U	430	U				
ANTHRACENE	UG/KG	BNA	67	J	370	U	430	U				
BENZO(A)ANTHRACENE	UG/KG	BNA	350		370	U	430	U				
BENZO(A)PYRENE	UG/KG	BNA	280	J	370	U	430	U				
BENZO(B)FLUORANTHENE	UG/KG	BNA	440		370	U	430	U				
BENZO(G,H,I)PERYLENE	UG/KG	BNA	260	J	370	U	430	U				
BENZO(K)FLUORANTHENE	UG/KG	BNA	390		370	U	430	U				
BENZOIC ACID	UG/KG	BNA	1700	U	1800	U	2100	U				
BENZYL ALCOHOL	UG/KG	BNA	350	U	370	U	430	U				
BIS(2-CHLOROETHOXY)METHANE	UG/KG	BNA	350	U	370	U	430	U				
BIS(2-CHLOROETHYL)ETHER	UG/KG	BNA	350	U	370	U	430	U				
BIS(2-CHLOROISOPROPYL)ETHER	UG/KG	BNA	350	U	370	U	430	U				
BIS(2-ETHYLHEXYL)PHTHALATE	UG/KG	BNA	350	U	370	U	430	U				
BUTYLBENZYLPHTHALATE	UG/KG	BNA	350	U	370	U	430	U				
CHRYSENE	UG/KG	BNA	540		370	U	430	U				
DI-N-BUTYLPHTHALATE	UG/KG	BNA	350	U	370	U	430	U				
DI-N-OCTYLPHTHALATE	UG/KG	BNA	350	U	370	U	430	U				
DIBENZ(A,H)ANTHRACENE	UG/KG	BNA	350	U	370	U	430	U				
DIBENZOFURAN	UG/KG	BNA	350	U	370	U	430	U				
DIETHYLPHTHALATE	UG/KG	BNA	350	U	370	U	430	U				
DIMETHYLPHTHALATE	UG/KG	BNA	350	U	370	U	430	U				
FLUORANTHENE	UG/KG	BNA	960		370	U	430	U				
FLUORENE	UG/KG	BNA	350	U	370	U	430	U				

NAVSTA-SAN DIEGO
SITE 2 SOILS

		SAMPLE NUMBER:	NS2-MW12-S01-5-FD		NS2-MW12-S02-10		NS2-MW12-S03-15		NS2-TB-02/12/91		NS2-TB-2-13-91 TR	
		SAMPLING DATE:	02/07/91		02/07/91		02/07/91		02/12/91		02/13/91	
		BORING:	MW12		MW12		MW12		TB		TB	
		SITE:	NS2		NS2		NS2		NS2		NS2	
		DEPTH:	5-FD		10		15		NS2-TB-02/12/91		13-91 TRIP	
COMPOUND NAME	UNITS	TEST CODE	RESULT	QUALIFIER	RESULT	QUALIFIER	RESULT	QUALIFIER	RESULT	QUALIFIER	RESULT	QUALIFIER
HEXACHLOROBENZENE	UG/KG	BNA	350	U	370	U	430	U				
HEXACHLOROBUTADIENE	UG/KG	BNA	350	U	370	U	430	U				
HEXACHLOROCYCLOPENTADIENE	UG/KG	BNA	350	U	370	U	430	U				
HEXACHLOROETHANE	UG/KG	BNA	350	U	370	U	430	U				
INDENO(1,2,3-C,D)PYRENE	UG/KG	BNA	220	J	370	U	430	U				
ISOPHORONE	UG/KG	BNA	350	U	370	U	430	U				
N-NITROSO-DI-N-PROPYLAMINE	UG/KG	BNA	350	U	370	U	430	U				
N-NITROSODIPHENYLAMINE (1)	UG/KG	BNA	350	U	370	U	430	U				
NAPHTHALENE	UG/KG	BNA	350	U	370	U	430	U				
NITROBENZENE	UG/KG	BNA	350	U	370	U	430	U				
PENTACHLOROPHENOL	UG/KG	BNA	1700	U	1800	U	2100	U				
PHENANTHRENE	UG/KG	BNA	310	J	370	U	430	U				
PHENOL	UG/KG	BNA	350	U	370	U	430	U				
PYRENE	UG/KG	BNA	980		370	U	430	U				
ANTIMONY	MG/KG	CAC METALS	7.7	BJ	4.1	U	7.9	B				
ARSENIC	MG/KG	CAC METALS	3.5	J	1.9	B	2.9					
BARIUM	MG/KG	CAC METALS	52.9		37.2	B	103					
BERYLLIUM	MG/KG	CAC METALS	0.80	B	0.43	B	0.98	B				
CADMIUM	MG/KG	CAC METALS	0.82	U	0.87	U	1.0	U				
CHROMIUM	MG/KG	CAC METALS	19.1	J	6.2		14.6					
COBALT	MG/KG	CAC METALS	3.9	B	3.5	B	9.0	B				
COPPER	MG/KG	CAC METALS	51.0		4.8	U	12.1	U				
LEAD	MG/KG	CAC METALS	97.3		3.8	U	3.5	U				
MERCURY	MG/KG	CAC METALS	0.21		0.17	U	0.20	U				
MOLYBDENUM	MG/KG	CAC METALS	1.4	U	1.5	U	1.8	U				
NICKEL	MG/KG	CAC METALS	6.1	B	1.9	U	6.6	B				
SELENIUM	MG/KG	CAC METALS	0.20	UJ	0.22	U	0.25	U				
SILVER	MG/KG	CAC METALS	0.76	U	0.79	U	1.7	U				
THALLIUM	MG/KG	CAC METALS	0.20	UJ	0.22	U	0.25	U				
VANADIUM	MG/KG	CAC METALS	23.3		18.9		52.9					
ZINC	MG/KG	CAC METALS	132		18.7	U	39.8	U				
ANTIMONY	UG/KG	CAC METALS										
ARSENIC	UG/KG	CAC METALS										
BARIUM	UG/KG	CAC METALS										
BERYLLIUM	UG/KG	CAC METALS										
CADMIUM	UG/KG	CAC METALS										
CHROMIUM	UG/KG	CAC METALS										
COBALT	UG/KG	CAC METALS										
COPPER	UG/KG	CAC METALS										
LEAD	UG/KG	CAC METALS										
MERCURY	UG/KG	CAC METALS										
MOLYBDENUM	UG/KG	CAC METALS										
NICKEL	UG/KG	CAC METALS										
SELENIUM	UG/KG	CAC METALS										
SILVER	UG/KG	CAC METALS										
THALLIUM	UG/KG	CAC METALS										
VANADIUM	UG/KG	CAC METALS										
ZINC	UG/KG	CAC METALS										
CAC WET EXTRACTION	DATE	CAC WET EX										
COPPER	MG/L	CAC WET EX										
LEAD	MG/L	CAC WET EX										

NAVSTA-SAN DIEGO
SITE 2 SOILS

		SAMPLE NUMBER:	NS2-MW12-S01-5-FD		NS2-MW12-S02-10		NS2-MW12-S03-15		NS2-TB-02/12/91		NS2-TB-2-13-91 TR	
		SAMPLING DATE:	02/07/91		02/07/91		02/07/91		02/12/91		02/13/91	
		BORING:	MW12		MW12		MW12		TB		TB	
		SITE:	NS2		NS2		NS2		NS2		NS2	
		DEPTH:	5-FD		10		15		NS2-TB-02/12/91		13-91 TRIP	
COMPOUND NAME	UNITS	TEST CODE	RESULT	QUALIFIER	RESULT	QUALIFIER	RESULT	QUALIFIER	RESULT	QUALIFIER	RESULT	QUALIFIER
MERCURY	MG/L	CAC WET EX										
TOTAL CYANIDE	MG/KG	CN	1	U	1	U	1	U				
TOTAL CYANIDE	MG/L	CN										
4,4'-DDD	UG/KG	PEST / PCB	20	J	18	U	21	U				
4,4'-DDE	UG/KG	PEST / PCB	34	UJ	18	U	21	U				
4,4'-DDT	UG/KG	PEST / PCB	34	UJ	18	U	21	U				
ALDRIN	UG/KG	PEST / PCB	17	UJ	9.1	U	11	U				
ALPHA CHLORDANE	UG/KG	PEST / PCB										
ALPHA-BHC	UG/KG	PEST / PCB	17	UJ	9.1	U	11	U				
ALPHA-CHLORDANE	UG/KG	PEST / PCB	170	UJ	91	U	110	U				
BETA-BHC	UG/KG	PEST / PCB	17	UJ	9.1	U	11	U				
CHLORDANE	UG/KG	PEST / PCB										
DELTA-BHC	UG/KG	PEST / PCB	17	UJ	9.1	U	11	U				
DIELDRIN	UG/KG	PEST / PCB	34	UJ	18	U	21	U				
ENDOSULFAN I	UG/KG	PEST / PCB	17	UJ	9.1	U	11	U				
ENDOSULFAN II	UG/KG	PEST / PCB	34	UJ	18	U	21	U				
ENDOSULFAN SULFATE	UG/KG	PEST / PCB	34	UJ	18	U	21	U				
ENDRIN	UG/KG	PEST / PCB	34	UJ	18	U	21	U				
ENDRIN KETONE	UG/KG	PEST / PCB	34	UJ	18	U	21	U				
GAMMA CHLORDANE	UG/KG	PEST / PCB										
GAMMA-BHC (LINDANE)	UG/KG	PEST / PCB	17	UJ	9.1	U	11	U				
GAMMA-CHLORDANE	UG/KG	PEST / PCB	170	UJ	91	U	110	U				
HEPTACHLOR	UG/KG	PEST / PCB	17	UJ	9.1	U	11	U				
HEPTACHLOR EPOXIDE	UG/KG	PEST / PCB	17	UJ	9.1	U	11	U				
METHOXYCHLOR	UG/KG	PEST / PCB	170	UJ	91	U	110	U				
PCB-1016	UG/KG	PEST / PCB	170	UJ	91	U	110	U				
PCB-1221	UG/KG	PEST / PCB	170	UJ	91	U	110	U				
PCB-1232	UG/KG	PEST / PCB	170	UJ	91	U	110	U				
PCB-1242	UG/KG	PEST / PCB	170	UJ	91	U	110	U				
PCB-1248	UG/KG	PEST / PCB	170	UJ	91	U	110	U				
PCB-1254	UG/KG	PEST / PCB	340	UJ	180	U	210	U				
PCB-1260	UG/KG	PEST / PCB	340	UJ	180	U	210	U				
TOXAPHENE	UG/KG	PEST / PCB	340	UJ	180	U	210	U				
DIESEL	MG/KG	TPHC	10	U	10	U	10	U				
HYDRAULIC OIL	MG/KG	TPHC	20	Z	10	U	10	U				
MOTOR OIL	MG/KG	TPHC	120	Z	10	U	10	U				
STODDARD	MG/KG	TPHC	10	U	10	U	10	U				
DIESEL	UG/KG	TPHC										
HYDRAULIC OIL	UG/KG	TPHC										
MOTOR OIL	UG/KG	TPHC										
STODDARD	UG/KG	TPHC										
1,1,1-TRICHLOROETHANE	UG/KG	VOA	5	U	6	U	7	U	5	U	5	U
1,1,2,2-TETRACHLOROETHANE	UG/KG	VOA	5	U	6	U	7	U	5	U	5	U
1,1,2-TRICHLOROETHANE	UG/KG	VOA	5	U	6	U	7	U	5	U	5	U
1,1-DICHLOROETHANE	UG/KG	VOA	5	U	6	U	7	U	5	U	5	U
1,1-DICHLOROETHENE	UG/KG	VOA	5	U	6	U	7	U	5	U	5	U
1,2-DICHLOROETHANE	UG/KG	VOA	5	U	6	U	7	U	5	U	5	U
1,2-DICHLOROETHENE (TOTAL)	UG/KG	VOA	5	U	6	U	7	U	5	U	5	U
1,2-DICHLOROPROPANE	UG/KG	VOA	5	U	6	U	7	U	5	U	5	U
2-BUTANONE	UG/KG	VOA	11	U	11	U	13	U	10	U	10	U
2-HEXANONE	UG/KG	VOA	11	U	11	U	13	U	10	U	10	U

NAVSTA-SAN DIEGO
SITE 2 SOILS

		SAMPLE NUMBER:	NS2-MW12-S01-5-FD		NS2-MW12-S02-10		NS2-MW12-S03-15		NS2-TB-02/12/91		NS2-TB-2-13-91 TR	
		SAMPLING DATE:	02/07/91		02/07/91		02/07/91		02/12/91		02/13/91	
		BORING:	MW12		MW12		MW12		TB		TB	
		SITE:	NS2		NS2		NS2		NS2		NS2	
		DEPTH:	5-FD		10		15		NS2-TB-02/12/91		13-91 TRIP	
COMPOUND NAME	UNITS	TEST CODE	RESULT	QUALIFIER	RESULT	QUALIFIER	RESULT	QUALIFIER	RESULT	QUALIFIER	RESULT	QUALIFIER
4-METHYL-2-PENTANONE	UG/KG	VOA	11	U	11	U	13	U	10	U	10	U
ACETONE	UG/KG	VOA	11	U	15	U	8	U	10	U	10	U
BENZENE	UG/KG	VOA	5	U	6	U	7	U	5	U	5	U
BROMODICHLOROMETHANE	UG/KG	VOA	5	U	6	U	7	U	5	U	5	U
BROMOFORM	UG/KG	VOA	5	U	6	U	7	U	5	U	5	U
BROMOMETHANE	UG/KG	VOA	11	U	11	U	13	U	10	U	10	U
CARBON DISULFIDE	UG/KG	VOA	5	U	6	U	7	U	5	U	5	U
CARBON TETRACHLORIDE	UG/KG	VOA	5	U	6	U	7	U	5	U	5	U
CHLOROBENZENE	UG/KG	VOA	5	U	6	U	7	U	5	U	5	U
CHLOROETHANE	UG/KG	VOA	11	U	11	U	13	U	10	U	10	U
CHLOROFORM	UG/KG	VOA	5	U	6	U	7	U	5	U	5	U
CHLOROMETHANE	UG/KG	VOA	11	U	11	U	13	U	10	U	10	U
CIS-1,3-DICHLOROPROPENE	UG/KG	VOA	5	U	6	U	7	U	5	U	5	U
DIBROMOCHLOROMETHANE	UG/KG	VOA	5	U	6	U	7	U	5	U	5	U
ETHYLBENZENE	UG/KG	VOA	5	U	6	U	7	U	5	U	5	U
METHYLENE CHLORIDE	UG/KG	VOA	16	U	12	U	18	U	4	BJ	5	B
STYRENE	UG/KG	VOA	5	U	6	U	7	U	5	U	5	U
TETRACHLOROETHENE	UG/KG	VOA	5	U	6	U	7	U	5	U	5	U
TOLUENE	UG/KG	VOA	5	U	6	U	7	U	5	U	5	U
TRANS-1,3-DICHLOROPROPENE	UG/KG	VOA	5	U	6	U	7	U	5	U	5	U
TRICHLOROETHENE	UG/KG	VOA	5	U	6	U	7	U	5	U	5	U
VINYL ACETATE	UG/KG	VOA	11	U	11	U	13	U	10	U	10	U
VINYL CHLORIDE	UG/KG	VOA	11	U	11	U	13	U	10	U	10	U
XYLENES (TOTAL)	UG/KG	VOA	5	U	6	U	7	U	5	U	5	U

NAVSTA-SAN DIEGO
SITE 2 SOILS

		SAMPLE NUMBER:	NS2-TB-2-4-91		NS2-TB-2-5-91		NS2-TB-2-6-91		NS2-TB-2-7-91	
		SAMPLING DATE:	02/04/91		02/05/91		02/06/91		02/07/91	
		BORING:	TB		TB		TB		TB	
		SITE:	NS2		NS2		NS2		NS2	
		DEPTH:	4-91		5-91		6-91		7-91	
COMPOUND NAME	UNITS	TEST CODE	RESULT	QUALIFIER	RESULT	QUALIFIER	RESULT	QUALIFIER	RESULT	QUALIFIER
1,2,4-TRICHLOROBENZENE	UG/KG	BNA								
1,2-DICHLOROBENZENE	UG/KG	BNA								
1,3-DICHLOROBENZENE	UG/KG	BNA								
1,4-DICHLOROBENZENE	UG/KG	BNA								
2,4,5-TRICHLOROPHENOL	UG/KG	BNA								
2,4,6-TRICHLOROPHENOL	UG/KG	BNA								
2,4-DICHLOROPHENOL	UG/KG	BNA								
2,4-DIMETHYLPHENOL	UG/KG	BNA								
2,4-DINITROPHENOL	UG/KG	BNA								
2,4-DINITROTOLUENE	UG/KG	BNA								
2,6-DINITROTOLUENE	UG/KG	BNA								
2-CHLORONAPHTHALENE	UG/KG	BNA								
2-CHLOROPHENOL	UG/KG	BNA								
2-METHYLNAPHTHALENE	UG/KG	BNA								
2-METHYLPHENOL	UG/KG	BNA								
2-NITROANILINE	UG/KG	BNA								
2-NITROPHENOL	UG/KG	BNA								
3,3'-DICHLOROBENZIDINE	UG/KG	BNA								
3-NITROANILINE	UG/KG	BNA								
4,6-DINITRO-2-METHYLPHENOL	UG/KG	BNA								
4-BROMOPHENYL-PHENYLETHER	UG/KG	BNA								
4-CHLORO-3-METHYLPHENOL	UG/KG	BNA								
4-CHLOROANILINE	UG/KG	BNA								
4-CHLOROPHENYL-PHENYLETHER	UG/KG	BNA								
4-METHYLPHENOL	UG/KG	BNA								
4-NITROANILINE	UG/KG	BNA								
4-NITROPHENOL	UG/KG	BNA								
ACENAPHTHENE	UG/KG	BNA								
ACENAPHTHYLENE	UG/KG	BNA								
ANTHRACENE	UG/KG	BNA								
BENZO(A)ANTHRACENE	UG/KG	BNA								
BENZO(A)PYRENE	UG/KG	BNA								
BENZO(B)FLUORANTHENE	UG/KG	BNA								
BENZO(G,H,I)PERYLENE	UG/KG	BNA								
BENZO(K)FLUORANTHENE	UG/KG	BNA								
BENZOIC ACID	UG/KG	BNA								
BENZYL ALCOHOL	UG/KG	BNA								
BIS(2-CHLOROETHOXY)METHANE	UG/KG	BNA								
BIS(2-CHLOROETHYL)ETHER	UG/KG	BNA								
BIS(2-CHLOROISOPROPYL)ETHER	UG/KG	BNA								
BIS(2-ETHYLHEXYL)PHTHALATE	UG/KG	BNA								
BUTYLBENZYLPHTHALATE	UG/KG	BNA								
CHRYSENE	UG/KG	BNA								
DI-N-BUTYLPHTHALATE	UG/KG	BNA								
DI-N-OCTYLPHTHALATE	UG/KG	BNA								
DIBENZ(A,H)ANTHRACENE	UG/KG	BNA								
DIBENZOFURAN	UG/KG	BNA								
DIETHYLPHTHALATE	UG/KG	BNA								
DIMETHYLPHTHALATE	UG/KG	BNA								
FLUORANTHENE	UG/KG	BNA								
FLUORENE	UG/KG	BNA								

NAVSTA-SAN DIEGO
SITE 2 SOILS

		SAMPLE NUMBER:	NS2-TB-2-4-91		NS2-TB-2-5-91		NS2-TB-2-6-91		NS2-TB-2-7-91	
		SAMPLING DATE:	02/04/91		02/05/91		02/06/91		02/07/91	
		BORING:	TB		TB		TB		TB	
		SITE:	NS2		NS2		NS2		NS2	
		DEPTH:	4-91		5-91		6-91		7-91	
COMPOUND NAME	UNITS	TEST CODE	RESULT	QUALIFIER	RESULT	QUALIFIER	RESULT	QUALIFIER	RESULT	QUALIFIER
HEXACHLOROBENZENE	UG/KG	BNA								
HEXACHLOROBUTADIENE	UG/KG	BNA								
HEXACHLOROCYCLOPENTADIENE	UG/KG	BNA								
HEXACHLOROETHANE	UG/KG	BNA								
INDENO(1,2,3-C,D)PYRENE	UG/KG	BNA								
ISOPHORONE	UG/KG	BNA								
N-NITROSO-DI-N-PROPYLAMINE	UG/KG	BNA								
N-NITROSODIPHENYLAMINE (1)	UG/KG	BNA								
NAPHTHALENE	UG/KG	BNA								
NITROBENZENE	UG/KG	BNA								
PENTACHLOROPHENOL	UG/KG	BNA								
PHENANTHRENE	UG/KG	BNA								
PHENOL	UG/KG	BNA								
PYRENE	UG/KG	BNA								
ANTIMONY	MG/KG	CAC METALS								
ARSENIC	MG/KG	CAC METALS								
BARIUM	MG/KG	CAC METALS								
BERYLLIUM	MG/KG	CAC METALS								
CADMIUM	MG/KG	CAC METALS								
CHROMIUM	MG/KG	CAC METALS								
COBALT	MG/KG	CAC METALS								
COPPER	MG/KG	CAC METALS								
LEAD	MG/KG	CAC METALS								
MERCURY	MG/KG	CAC METALS								
MOLYBDENUM	MG/KG	CAC METALS								
NICKEL	MG/KG	CAC METALS								
SELENIUM	MG/KG	CAC METALS								
SILVER	MG/KG	CAC METALS								
THALLIUM	MG/KG	CAC METALS								
VANADIUM	MG/KG	CAC METALS								
ZINC	MG/KG	CAC METALS								
ANTIMONY	UG/KG	CAC METALS								
ARSENIC	UG/KG	CAC METALS								
BARIUM	UG/KG	CAC METALS								
BERYLLIUM	UG/KG	CAC METALS								
CADMIUM	UG/KG	CAC METALS								
CHROMIUM	UG/KG	CAC METALS								
COBALT	UG/KG	CAC METALS								
COPPER	UG/KG	CAC METALS								
LEAD	UG/KG	CAC METALS								
MERCURY	UG/KG	CAC METALS								
MOLYBDENUM	UG/KG	CAC METALS								
NICKEL	UG/KG	CAC METALS								
SELENIUM	UG/KG	CAC METALS								
SILVER	UG/KG	CAC METALS								
THALLIUM	UG/KG	CAC METALS								
VANADIUM	UG/KG	CAC METALS								
ZINC	UG/KG	CAC METALS								
CAC WET EXTRACTION	DATE	CAC WET EX								
COPPER	MG/L	CAC WET EX								
LEAD	MG/L	CAC WET EX								

NAVSTA-SAN DIEGO
SITE 2 SOILS

		SAMPLE NUMBER:	NS2-TB-2-4-91		NS2-TB-2-5-91		NS2-TB-2-6-91		NS2-TB-2-7-91	
		SAMPLING DATE:	02/04/91		02/05/91		02/06/91		02/07/91	
		BORING:	TB		TB		TB		TB	
		SITE:	NS2		NS2		NS2		NS2	
		DEPTH:	4-91		5-91		6-91		7-91	
COMPOUND NAME	UNITS	TEST CODE	RESULT	QUALIFIER	RESULT	QUALIFIER	RESULT	QUALIFIER	RESULT	QUALIFIER
MERCURY	MG/L	CAC WET EX								
TOTAL CYANIDE	MG/KG	CN								
TOTAL CYANIDE	MG/L	CN								
4,4'-DDD	UG/KG	PEST / PCB								
4,4'-DDE	UG/KG	PEST / PCB								
4,4'-DDT	UG/KG	PEST / PCB								
ALDRIN	UG/KG	PEST / PCB								
ALPHA CHLORDANE	UG/KG	PEST / PCB								
ALPHA-BHC	UG/KG	PEST / PCB								
ALPHA-CHLORDANE	UG/KG	PEST / PCB								
BETA-BHC	UG/KG	PEST / PCB								
CHLORDANE	UG/KG	PEST / PCB								
DELTA-BHC	UG/KG	PEST / PCB								
DIELDRIN	UG/KG	PEST / PCB								
ENDOSULFAN I	UG/KG	PEST / PCB								
ENDOSULFAN II	UG/KG	PEST / PCB								
ENDOSULFAN SULFATE	UG/KG	PEST / PCB								
ENDRIN	UG/KG	PEST / PCB								
ENDRIN KETONE	UG/KG	PEST / PCB								
GAMMA CHLORDANE	UG/KG	PEST / PCB								
GAMMA-BHC (LINDANE)	UG/KG	PEST / PCB								
GAMMA-CHLORDANE	UG/KG	PEST / PCB								
HEPTACHLOR	UG/KG	PEST / PCB								
HEPTACHLOR EPOXIDE	UG/KG	PEST / PCB								
METHOXYCHLOR	UG/KG	PEST / PCB								
PCB-1016	UG/KG	PEST / PCB								
PCB-1221	UG/KG	PEST / PCB								
PCB-1232	UG/KG	PEST / PCB								
PCB-1242	UG/KG	PEST / PCB								
PCB-1248	UG/KG	PEST / PCB								
PCB-1254	UG/KG	PEST / PCB								
PCB-1260	UG/KG	PEST / PCB								
TOXAPHENE	UG/KG	PEST / PCB								
DIESEL	MG/KG	TPHC								
HYDRAULIC OIL	MG/KG	TPHC								
MOTOR OIL	MG/KG	TPHC								
STODDARD	MG/KG	TPHC								
DIESEL	UG/KG	TPHC								
HYDRAULIC OIL	UG/KG	TPHC								
MOTOR OIL	UG/KG	TPHC								
STODDARD	UG/KG	TPHC								
1,1,1-TRICHLOROETHANE	UG/KG	VOA	5	U	5	U	5	U	5	U
1,1,2,2-TETRACHLOROETHANE	UG/KG	VOA	5	U	5	U	5	U	5	U
1,1,2-TRICHLOROETHANE	UG/KG	VOA	5	U	5	U	5	U	5	U
1,1-DICHLOROETHANE	UG/KG	VOA	5	U	5	U	5	U	5	U
1,1-DICHLOROETHENE	UG/KG	VOA	5	U	5	U	5	U	5	U
1,2-DICHLOROETHANE	UG/KG	VOA	5	U	5	U	5	U	5	U
1,2-DICHLOROETHENE (TOTAL)	UG/KG	VOA	5	U	5	U	5	U	5	U
1,2-DICHLOROPROPANE	UG/KG	VOA	5	U	5	U	5	U	5	U
2-BUTANONE	UG/KG	VOA	10	U	10	U	10	U	10	U
2-HEXANONE	*UG/KG*	*VOA*	10	U	10	U	10	U	10	U

NAVSTA-SAN DIEGO
SITE 2 SOILS

		SAMPLE NUMBER:	NS2-TB-2-4-91		NS2-TB-2-5-91		NS2-TB-2-6-91		NS2-TB-2-7-91	
		SAMPLING DATE:	02/04/91		02/05/91		02/06/91		02/07/91	
		BORING:	TB		TB		TB		TB	
		SITE:	NS2		NS2		NS2		NS2	
		DEPTH:	4-91		5-91		6-91		7-91	
COMPOUND NAME	UNITS	TEST CODE	RESULT	QUALIFIER	RESULT	QUALIFIER	RESULT	QUALIFIER	RESULT	QUALIFIER
4-METHYL-2-PENTANONE	UG/KG	VOA	10	U	10	U	10	U	10	U
ACETONE	UG/KG	VOA	10	U	3	BJ	10		10	U
BENZENE	UG/KG	VOA	5	U	5	U	5	U	5	U
BROMODICHLOROMETHANE	UG/KG	VOA	5	U	5	U	5	U	5	U
BROMOFORM	UG/KG	VOA	5	U	5	U	5	U	5	U
BROMOMETHANE	UG/KG	VOA	10	U	10	U	10	U	10	U
CARBON DISULFIDE	UG/KG	VOA	5	U	5	U	5	U	5	U
CARBON TETRACHLORIDE	UG/KG	VOA	5	U	5	U	5	U	5	U
CHLOROBENZENE	UG/KG	VOA	5	U	5	U	5	U	5	U
CHLOROETHANE	UG/KG	VOA	10	U	10	U	10	U	10	U
CHLOROFORM	UG/KG	VOA	5	U	5	U	5	U	5	U
CHLOROMETHANE	UG/KG	VOA	10	U	10	U	10	U	10	U
CIS-1,3-DICHLOROPROPENE	UG/KG	VOA	5	U	5	U	5	U	5	U
DIBROMOCHLOROMETHANE	UG/KG	VOA	5	U	5	U	5	U	5	U
ETHYLBENZENE	UG/KG	VOA	5	U	5	U	5	U	5	U
METHYLENE CHLORIDE	UG/KG	VOA	3	BJ	4	BJ	3	BJ	2	BJ
STYRENE	UG/KG	VOA	5	U	5	U	5	U	5	U
TETRACHLOROETHENE	UG/KG	VOA	5	U	5	U	5	U	5	U
TOLUENE	UG/KG	VOA	5	U	5	U	5	U	5	U
TRANS-1,3-DICHLOROPROPENE	UG/KG	VOA	5	U	5	U	5	U	5	U
TRICHLOROETHENE	UG/KG	VOA	5	U	5	U	5	U	5	U
VINYL ACETATE	UG/KG	VOA	10	U	10	U	10	U	10	U
VINYL CHLORIDE	UG/KG	VOA	10	U	10	U	10	U	10	U
XYLENES (TOTAL)	UG/KG	VOA	5	U	5	U	5	U	5	U

NAVSTA-SAN DIEGO
SITE 3 SOILS

		SAMPLE NUMBER:	NS3-FB-2-14-91		NS3-TB-2-14-91	
		SAMPLING DATE:	02/14/91		02/14/91	
		BORING:	FB		TB	
		SITE:	NS3		NS3	
		DEPTH:	14-91		14-91	
COMPOUND NAME	UNITS	TEST CODE	RESULT	QUALIFIER	RESULT	QUALIFIER
1,2,4-TRICHLOROBENZENE	UG/KG	BNA	10	U		
1,2-DICHLOROBENZENE	UG/KG	BNA	10	U		
1,3-DICHLOROBENZENE	UG/KG	BNA	10	U		
1,4-DICHLOROBENZENE	UG/KG	BNA	10	U		
2,4,5-TRICHLOROPHENOL	UG/KG	BNA	50	U		
2,4,6-TRICHLOROPHENOL	UG/KG	BNA	10	U		
2,4-DICHLOROPHENOL	UG/KG	BNA	10	U		
2,4-DIMETHYLPHENOL	UG/KG	BNA	10	U		
2,4-DINITROPHENOL	UG/KG	BNA	50	U		
2,4-DINITROTOLUENE	UG/KG	BNA	10	U		
2,6-DINITROTOLUENE	UG/KG	BNA	10	U		
2-CHLORONAPHTHALENE	UG/KG	BNA	10	U		
2-CHLOROPHENOL	UG/KG	BNA	10	U		
2-METHYLNAPHTHALENE	UG/KG	BNA	10	U		
2-METHYLPHENOL	UG/KG	BNA	10	U		
2-NITROANILINE	UG/KG	BNA	50	U		
2-NITROPHENOL	UG/KG	BNA	10	U		
3,3'-DICHLOROBENZIDINE	UG/KG	BNA	20	U		
3-NITROANILINE	UG/KG	BNA	50	U		
4,6-DINITRO-2-METHYLPHENOL	UG/KG	BNA	50	U		
4-BROMOPHENYL-PHENYLETHER	UG/KG	BNA	10	U		
4-CHLORO-3-METHYLPHENOL	UG/KG	BNA	10	U		
4-CHLOROANILINE	UG/KG	BNA	10	U		
4-CHLOROPHENYL-PHENYLETHER	UG/KG	BNA	10	U		
4-METHYLPHENOL	UG/KG	BNA	10	U		
4-NITROANILINE	UG/KG	BNA	50	U		
4-NITROPHENOL	UG/KG	BNA	50	U		
ACENAPHTHENE	UG/KG	BNA	10	U		
ACENAPHTHYLENE	UG/KG	BNA	10	U		
ANTHRACENE	UG/KG	BNA	10	U		
BENZO(A)ANTHRACENE	UG/KG	BNA	10	U		
BENZO(A)PYRENE	UG/KG	BNA	10	U		
BENZO(B)FLUORANTHENE	UG/KG	BNA	10	U		
BENZO(G,H,I)PERYLENE	UG/KG	BNA	10	U		
BENZO(K)FLUORANTHENE	UG/KG	BNA	10	U		
BENZOIC ACID	UG/KG	BNA	50	U		
BENZYL ALCOHOL	UG/KG	BNA	10	U		
BIS(2-CHLOROETHOXY)METHANE	UG/KG	BNA	10	U		
BIS(2-CHLOROETHYL)ETHER	UG/KG	BNA	10	U		
BIS(2-CHLOROISOPROPYL)ETHER	UG/KG	BNA	10	U		
BIS(2-ETHYLHEXYL)PHTHALATE	UG/KG	BNA	10	U		
BUTYLBENZYLPHTHALATE	UG/KG	BNA	10	U		
CHRYSENE	UG/KG	BNA	10	U		
DI-N-BUTYLPHTHALATE	UG/KG	BNA	10	U		
DI-N-OCTYLPHTHALATE	UG/KG	BNA	10	U		
DIBENZ(A,H)ANTHRACENE	UG/KG	BNA	10	U		
DIBENZOFURAN	UG/KG	BNA	10	U		
DIETHYLPHTHALATE	UG/KG	BNA	10	U		
DIMETHYLPHTHALATE	UG/KG	BNA	10	U		
FLUORANTHENE	UG/KG	BNA	10	U		
FLUORENE	UG/KG	BNA	10	U		

NAVSTA-SAN DIEGO
SITE 3 SOILS

		SAMPLE NUMBER:	NS3-FB-2-14-91		NS3-TB-2-14-91	
		SAMPLING DATE:	02/14/91		02/14/91	
		BORING:	FB		TB	
		SITE:	NS3		NS3	
		DEPTH:	14-91		14-91	
COMPOUND NAME	UNITS	TEST CODE	RESULT	QUALIFIER	RESULT	QUALIFIER
HEXACHLOROBENZENE	UG/KG	BNA	10	U		
HEXACHLOROBUTADIENE	UG/KG	BNA	10	U		
HEXACHLOROCYCLOPENTADIENE	UG/KG	BNA	10	U		
HEXACHLOROETHANE	UG/KG	BNA	10	U		
INDENO(1,2,3-C,D)PYRENE	UG/KG	BNA	10	U		
ISOPHORONE	UG/KG	BNA	10	U		
N-NITROSO-DI-N-PROPYLAMINE	UG/KG	BNA	10	U		
N-NITROSODIPHENYLAMINE (1)	UG/KG	BNA	10	U		
NAPHTHALENE	UG/KG	BNA	10	U		
NITROBENZENE	UG/KG	BNA	10	U		
PENTACHLOROPHENOL	UG/KG	BNA	50	U		
PHENANTHRENE	UG/KG	BNA	10	U		
PHENOL	UG/KG	BNA	10	U		
PYRENE	UG/KG	BNA	10	U		
ANTIMONY	UG/KG	CAC METALS	19.0	U		
ARSENIC	UG/KG	CAC METALS	1.0	U		
BARIUM	UG/KG	CAC METALS	8.8	B		
BERYLLIUM	UG/KG	CAC METALS	1.0	U		
CADMIUM	UG/KG	CAC METALS	4.0	U		
CHROMIUM	UG/KG	CAC METALS	4.0	U		
COBALT	UG/KG	CAC METALS	5.0	U		
COPPER	UG/KG	CAC METALS	14.8	B		
LEAD	UG/KG	CAC METALS	1.0	U		
MERCURY	UG/KG	CAC METALS	0.20	U		
MOLYBDENUM	UG/KG	CAC METALS	7.0	U		
NICKEL	UG/KG	CAC METALS	9.0	U		
SELENIUM	UG/KG	CAC METALS	1.0	U		
SILVER	UG/KG	CAC METALS	4.0	B		
THALLIUM	UG/KG	CAC METALS	1.0	U		
VANADIUM	UG/KG	CAC METALS	34.0	B		
ZINC	UG/KG	CAC METALS	17.4	B		
4,4'-DDD	UG/KG	PEST / PCB	0.10	U		
4,4'-DDE	UG/KG	PEST / PCB	0.10	U		
4,4'-DDT	UG/KG	PEST / PCB	0.10	U		
ALDRIN	UG/KG	PEST / PCB	0.05	U		
ALPHA-BHC	UG/KG	PEST / PCB	0.05	U		
ALPHA-CHLORDANE	UG/KG	PEST / PCB	0.50	U		
BETA-BHC	UG/KG	PEST / PCB	0.05	U		
DELTA-BHC	UG/KG	PEST / PCB	0.05	U		
DIELDRIN	UG/KG	PEST / PCB	0.10	U		
ENDOSULFAN I	UG/KG	PEST / PCB	0.05	U		
ENDOSULFAN II	UG/KG	PEST / PCB	0.10	U		
ENDOSULFAN SULFATE	UG/KG	PEST / PCB	0.10	U		
ENDRIN	UG/KG	PEST / PCB	0.10	U		
ENDRIN KETONE	UG/KG	PEST / PCB	0.10	U		
GAMMA-BHC (LINDANE)	UG/KG	PEST / PCB	0.05	U		
GAMMA-CHLORDANE	UG/KG	PEST / PCB	0.50	U		
HEPTACHLOR	UG/KG	PEST / PCB	0.05	U		
HEPTACHLOR EPOXIDE	UG/KG	PEST / PCB	0.05	U		
METHOXYCHLOR	UG/KG	PEST / PCB	0.50	U		
PCB-1016	UG/KG	PEST / PCB	0.50	U		

NAVSTA-SAN DIEGO
SITE 3 SOILS

		SAMPLE NUMBER:	NS3-FB-2-14-91		NS3-TB-2-14-91	
		SAMPLING DATE:	02/14/91		02/14/91	
		BORING:	FB		TB	
		SITE:	NS3		NS3	
		DEPTH:	14-91		14-91	
COMPOUND NAME	UNITS	TEST CODE	RESULT	QUALIFIER	RESULT	QUALIFIER
PCB-1221	UG/KG	PEST / PCB	0.50	U		
PCB-1232	UG/KG	PEST / PCB	0.50	U		
PCB-1242	UG/KG	PEST / PCB	0.50	U		
PCB-1248	UG/KG	PEST / PCB	0.50	U		
PCB-1254	UG/KG	PEST / PCB	1.00	U		
PCB-1260	UG/KG	PEST / PCB	1.00	U		
TOXAPHENE	UG/KG	PEST / PCB	1.00	U		
DIESEL	UG/KG	TPHC	250	U		
1,1,1-TRICHLOROETHANE	UG/KG	VOA	5	U	5	U
1,1,2,2-TETRACHLOROETHANE	UG/KG	VOA	5	U	5	U
1,1,2-TRICHLOROETHANE	UG/KG	VOA	5	U	5	U
1,1-DICHLOROETHANE	UG/KG	VOA	5	U	5	U
1,1-DICHLOROETHENE	UG/KG	VOA	5	U	5	U
1,2-DICHLOROETHANE	UG/KG	VOA	5	U	5	U
1,2-DICHLOROETHENE (TOTAL)	UG/KG	VOA	5	U	5	U
1,2-DICHLOROPROPANE	UG/KG	VOA	5	U	5	U
2-BUTANONE	UG/KG	VOA	10	U	10	U
2-HEXANONE	UG/KG	VOA	10	U	10	U
4-METHYL-2-PENTANONE	UG/KG	VOA	10	U	10	U
ACETONE	UG/KG	VOA	10	U	10	U
BENZENE	UG/KG	VOA	5	U	5	U
BROMODICHLOROMETHANE	UG/KG	VOA	3	J	5	U
BROMOFORM	UG/KG	VOA	1	J	5	U
BROMOMETHANE	UG/KG	VOA	10	U	10	U
CARBON DISULFIDE	UG/KG	VOA	5	U	5	U
CARBON TETRACHLORIDE	UG/KG	VOA	5	U	5	U
CHLOROBENZENE	UG/KG	VOA	5	U	5	U
CHLOROETHANE	UG/KG	VOA	10	U	10	U
CHLOROFORM	UG/KG	VOA	8	B	5	U
CHLOROMETHANE	UG/KG	VOA	10	U	10	U
CIS-1,3-DICHLOROPROPENE	UG/KG	VOA	5	U	5	U
DIBROMOCHLOROMETHANE	UG/KG	VOA	3	J	5	U
ETHYLBENZENE	UG/KG	VOA	5	U	5	U
METHYLENE CHLORIDE	UG/KG	VOA	4	BJ	5	B
STYRENE	UG/KG	VOA	5	U	5	U
TETRACHLOROETHENE	UG/KG	VOA	5	U	5	U
TOLUENE	UG/KG	VOA	5	U	5	U
TRANS-1,3-DICHLOROPROPENE	UG/KG	VOA	5	U	5	U
TRICHLOROETHENE	UG/KG	VOA	5	U	5	U
VINYL ACETATE	UG/KG	VOA	10	U	10	U
VINYL CHLORIDE	UG/KG	VOA	10	U	10	U
XYLENES (TOTAL)	UG/KG	VOA	5	U	5	U

NAVSTA-SAN DIEGO
SITE 4 SOILS

		SAMPLE NUMBER:	NS4-BH1-S01-5		NS4-BH1-S02-10		NS4-BH2-S01-5		NS4-BH2-S02-15		NS4-BH2-S03-5 FD	
		SAMPLING DATE:	01/24/91		01/24/91		01/24/91		01/24/91		01/24/91	
		BORING:	BH1		BH1		BH2		BH2		BH2	
		SITE:	NS4		NS4		NS4		NS4		NS4	
		DEPTH:	5		10		5		15		5 FD	
COMPOUND NAME	UNITS	TEST CODE	RESULT	QUALIFIER	RESULT	QUALIFIER	RESULT	QUALIFIER	RESULT	QUALIFIER	RESULT	QUALIFIER
1,2,4-TRICHLOROBENZENE	UG/KG	BNA	380	U	390	U	370	U	400	U	370	U
1,2-DICHLOROBENZENE	UG/KG	BNA	380	U	390	U	370	U	400	U	370	U
1,3-DICHLOROBENZENE	UG/KG	BNA	380	U	390	U	370	U	400	U	370	U
1,4-DICHLOROBENZENE	UG/KG	BNA	380	U	390	U	370	U	400	U	370	U
2,4,5-TRICHLOROPHENOL	UG/KG	BNA	1800	U	1900	U	1800	U	1900	U	1800	U
2,4,6-TRICHLOROPHENOL	UG/KG	BNA	380	U	390	U	370	U	400	U	370	U
2,4-DICHLOROPHENOL	UG/KG	BNA	380	U	390	U	370	U	400	U	370	U
2,4-DIMETHYLPHENOL	UG/KG	BNA	380	U	390	U	370	U	400	U	370	U
2,4-DINITROPHENOL	UG/KG	BNA	1800	U	1900	U	1800	U	1900	U	1800	U
2,4-DINITROTOLUENE	UG/KG	BNA	380	U	390	U	370	U	400	U	370	U
2,6-DINITROTOLUENE	UG/KG	BNA	380	U	390	U	370	U	400	U	370	U
2-CHLORONAPHTHALENE	UG/KG	BNA	380	U	390	U	370	U	400	U	370	U
2-CHLOROPHENOL	UG/KG	BNA	380	U	390	U	370	U	400	U	370	U
2-METHYLNAPHTHALENE	UG/KG	BNA	380	U	390	U	370	U	400	U	370	U
2-METHYLPHENOL	UG/KG	BNA	380	U	390	U	370	U	400	U	370	U
2-NITROANILINE	UG/KG	BNA	1800	U	1900	U	1800	U	1900	U	1800	U
2-NITROPHENOL	UG/KG	BNA	380	U	390	U	370	U	400	U	370	U
3,3'-DICHLOROBENZIDINE	UG/KG	BNA	760	U	790	U	740	U	800	U	740	U
3-NITROANILINE	UG/KG	BNA	1800	U	1900	U	1800	U	1900	U	1800	U
4,6-DINITRO-2-METHYLPHENOL	UG/KG	BNA	1800	U	1900	U	1800	U	1900	U	1800	U
4-BROMOPHENYL-PHENYLETHER	UG/KG	BNA	380	U	390	U	370	U	400	U	370	U
4-CHLORO-3-METHYLPHENOL	UG/KG	BNA	380	U	390	U	370	U	400	U	370	U
4-CHLOROANILINE	UG/KG	BNA	380	U	390	U	370	U	400	U	370	U
4-CHLOROPHENYL-PHENYLETHER	UG/KG	BNA	380	U	390	U	370	U	400	U	370	U
4-METHYLPHENOL	UG/KG	BNA	380	U	390	U	370	U	400	U	370	U
4-NITROANILINE	UG/KG	BNA	1800	U	1900	U	1800	U	1900	U	1800	U
4-NITROPHENOL	UG/KG	BNA	1800	U	1900	U	1800	U	1900	U	1800	U
ACENAPHTHENE	UG/KG	BNA	380	U	390	U	370	U	400	U	370	U
ACENAPHTHYLENE	UG/KG	BNA	380	U	390	U	370	U	400	U	370	U
ANTHRACENE	UG/KG	BNA	380	U	390	U	370	U	400	U	370	U
BENZO(A)ANTHRACENE	UG/KG	BNA	110	J	390	U	370	U	400	U	370	U
BENZO(A)PYRENE	UG/KG	BNA	740		390	U	370	U	400	U	370	U
BENZO(B)FLUORANTHENE	UG/KG	BNA	680		390	U	370	U	400	U	370	U
BENZO(G,H,I)PERYLENE	UG/KG	BNA	320	J	390	U	370	U	400	U	370	U
BENZO(K)FLUORANTHENE	UG/KG	BNA	490		390	U	370	U	400	U	370	U
BENZOIC ACID	UG/KG	BNA	1800	U	1900	U	43	J	1900	U	1800	U
BENZYL ALCOHOL	UG/KG	BNA	380	U	390	U	370	U	400	U	370	U
BIS(2-CHLOROETHOXY)METHANE	UG/KG	BNA	380	U	390	U	370	U	400	U	370	U
BIS(2-CHLOROETHYL)ETHER	UG/KG	BNA	380	U	390	U	370	U	400	U	370	U
BIS(2-CHLOROISOPROPYL)ETHER	UG/KG	BNA	380	U	390	U	370	U	400	U	370	U
BIS(2-ETHYLHEXYL)PHTHALATE	UG/KG	BNA	1200		390	U	65	J	400	U	370	U
BUTYLBENZYLPHTHALATE	UG/KG	BNA	380	U	390	U	370	U	400	U	370	U
CHRYSENE	UG/KG	BNA	320	J	390	U	370	U	400	U	370	U
DI-N-BUTYLPHTHALATE	UG/KG	BNA	380	U	390	U	370	U	400	U	370	U
DI-N-OCTYLPHTHALATE	UG/KG	BNA	380	U	390	U	370	U	400	U	370	U
DIBENZ(A,H)ANTHRACENE	UG/KG	BNA	88	J	390	U	370	U	400	U	370	U
DIBENZOFURAN	UG/KG	BNA	380	U	390	U	370	U	400	U	370	U
DIETHYLPHTHALATE	UG/KG	BNA	380	U	390	U	370	U	78	J	370	U
DIMETHYLPHTHALATE	UG/KG	BNA	380	U	390	U	370	U	400	U	370	U
FLUORANTHENE	UG/KG	BNA	140	J	390	U	370	U	400	U	370	U
FLUORENE	UG/KG	BNA	380	U	390	U	370	U	400	U	370	U

NAVSTA-SAN DIEGO
SITE 4 SOILS

		SAMPLE NUMBER:	NS4-BH1-S01-5		NS4-BH1-S02-10		NS4-BH2-S01-5		NS4-BH2-S02-15		NS4-BH2-S03-5 FD	
		SAMPLING DATE:	01/24/91		01/24/91		01/24/91		01/24/91		01/24/91	
		BORING:	BH1		BH1		BH2		BH2		BH2	
		SITE:	NS4		NS4		NS4		NS4		NS4	
		DEPTH:	5		10		5		15		5 FD	
COMPOUND NAME	UNITS	TEST CODE	RESULT	QUALIFIER	RESULT	QUALIFIER	RESULT	QUALIFIER	RESULT	QUALIFIER	RESULT	QUALIFIER
HEXACHLOROBENZENE	UG/KG	BNA	380	U	390	U	370	U	400	U	370	U
HEXACHLOROBUTADIENE	UG/KG	BNA	380	U	390	U	370	U	400	U	370	U
HEXACHLOROCYCLOPENTADIENE	UG/KG	BNA	380	U	390	U	370	U	400	U	370	U
HEXACHLOROETHANE	UG/KG	BNA	380	U	390	U	370	U	400	U	370	U
INDENO(1,2,3-C,D)PYRENE	UG/KG	BNA	280	J	390	U	370	U	400	U	370	U
ISOPHORONE	UG/KG	BNA	380	U	390	U	370	U	400	U	370	U
N-NITROSO-DI-N-PROPYLAMINE	UG/KG	BNA	380	U	390	U	370	U	400	U	370	U
N-NITROSODIPHENYLAMINE (1)	UG/KG	BNA	380	U	390	U	370	U	400	U	370	U
NAPHTHALENE	UG/KG	BNA	380	U	390	U	370	U	400	U	370	U
NITROBENZENE	UG/KG	BNA	380	U	390	U	370	U	400	U	370	U
PENTACHLOROPHENOL	UG/KG	BNA	1800	U	1900	U	1800	U	1900	U	1800	U
PHENANTHRENE	UG/KG	BNA	380	U	390	U	370	U	400	U	370	U
PHENOL	UG/KG	BNA	380	U	390	U	370	U	400	U	370	U
PYRENE	UG/KG	BNA	220	J	390	U	370	U	400	U	370	U
ANTIMONY	MG/KG	CAC METALS	33.7	J	4.0	UJ	4.2	U	4.5	U	4.8	B
ARSENIC	MG/KG	CAC METALS	3.4		1.3	B	2.1	B	2.4		1.7	B
BARIUM	MG/KG	CAC METALS	82.0		38.0	B	75.7		135		85.2	
BERYLLIUM	MG/KG	CAC METALS	1.3		1.0	B	2.0		2.2		1.7	
CADMIUM	MG/KG	CAC METALS	2.7		0.87	U	0.89	U	0.96	U	0.82	U
CHROMIUM	MG/KG	CAC METALS	51.7		6.0		13.6		14.6		10	
COBALT	MG/KG	CAC METALS	4.4	B	3.2	B	7.7	B	9.6	B	8.8	B
COPPER	MG/KG	CAC METALS	450		58.7	U	48.8	U	13.1	U	64.0	
LEAD	MG/KG	CAC METALS	3280		11.3		26.6		5.2	U	80.4	
MERCURY	MG/KG	CAC METALS	0.69		0.18	U	0.21		0.18	U	0.17	U
MOLYBDENUM	MG/KG	CAC METALS	1.6	U	1.5	U	1.9	U	1.7	U	1.4	U
NICKEL	MG/KG	CAC METALS	4.8	B	4.4	B	5.5	B	4.3	B	3.4	B
SELENIUM	MG/KG	CAC METALS	0.44	U	0.45	U	0.44	U	0.47	U	0.44	U
SILVER	MG/KG	CAC METALS	1.6	U	1.3	U	1.8	U	1.3	U	2.1	U
THALLIUM	MG/KG	CAC METALS	0.22	B	0.22	U	0.22	U	0.26	B	0.29	B
VANADIUM	MG/KG	CAC METALS	23.6		21.3		51.4		53.4		53.7	
ZINC	MG/KG	CAC METALS	496	U	26.0	U	81.1		33.5		84.0	
ANTIMONY	UG/KG	CAC METALS										
ARSENIC	UG/KG	CAC METALS										
BARIUM	UG/KG	CAC METALS										
BERYLLIUM	UG/KG	CAC METALS										
CADMIUM	UG/KG	CAC METALS										
CHROMIUM	UG/KG	CAC METALS										
COBALT	UG/KG	CAC METALS										
COPPER	UG/KG	CAC METALS										
LEAD	UG/KG	CAC METALS										
MERCURY	UG/KG	CAC METALS										
MOLYBDENUM	UG/KG	CAC METALS										
NICKEL	UG/KG	CAC METALS										
SELENIUM	UG/KG	CAC METALS										
SILVER	UG/KG	CAC METALS										
THALLIUM	UG/KG	CAC METALS										
VANADIUM	UG/KG	CAC METALS										
ZINC	UG/KG	CAC METALS										
CAC WET EXTRACTION	DATE	CAC WET EX										
COPPER	MG/L	CAC WET EX										
LEAD	MG/L	CAC WET EX	250								5.8	

NAVSTA-SAN DIEGO
SITE 4 SOILS

		SAMPLE NUMBER:	NS4-BH1-S01-5		NS4-BH1-S02-10		NS4-BH2-S01-5		NS4-BH2-S02-15		NS4-BH2-S03-5 FD	
		SAMPLING DATE:	01/24/91		01/24/91		01/24/91		01/24/91		01/24/91	
		BORING:	BH1		BH1		BH2		BH2		BH2	
		SITE:	NS4		NS4		NS4		NS4		NS4	
		DEPTH:	5		10		5		15		5 FD	
COMPOUND NAME	UNITS	TEST CODE	RESULT	QUALIFIER	RESULT	QUALIFIER	RESULT	QUALIFIER	RESULT	QUALIFIER	RESULT	QUALIFIER
TOTAL CYANIDE	MG/KG	CN	1	UJ	1	UJ	1	UJ	1	UJ	1	UJ
TOTAL CYANIDE	MG/L	CN										
4,4'-DDD	UG/KG	PEST / PCB	74	UJ	76	UJ	18	U	19	U	18	U
4,4'-DDE	UG/KG	PEST / PCB	74	UJ	76	UJ	18	U	19	U	18	U
4,4'-DDT	UG/KG	PEST / PCB	74	UJ	76	UJ	18	U	19	U	18	U
ALDRIN	UG/KG	PEST / PCB	37	UJ	38	UJ	9	U	9.6	U	9	U
ALPHA-BHC	UG/KG	PEST / PCB	37	UJ	38	UJ	9	U	9.6	U	9	U
ALPHA-CHLORDANE	UG/KG	PEST / PCB	370	UJ	380	UJ	90	U	96	U	90	U
BETA-BHC	UG/KG	PEST / PCB	37	UJ	38	UJ	9	U	9.6	U	9	U
DELTA-BHC	UG/KG	PEST / PCB	37	UJ	38	UJ	9	U	9.6	U	9	U
DIBUTYL CHLORENDATE	UG/KG	PEST / PCB	119		36		36		77		28	
DIELDRIN	UG/KG	PEST / PCB	74	UJ	76	UJ	18	U	19	U	18	U
ENDOSULFAN I	UG/KG	PEST / PCB	37	UJ	38	UJ	9	U	9.6	U	9	U
ENDOSULFAN II	UG/KG	PEST / PCB	74	UJ	76	UJ	18	U	19	U	18	U
ENDOSULFAN SULFATE	UG/KG	PEST / PCB	74	UJ	76	UJ	18	U	19	U	18	U
ENDRIN	UG/KG	PEST / PCB	74	UJ	76	UJ	18	U	19	U	18	U
ENDRIN KETONE	UG/KG	PEST / PCB	74	UJ	76	UJ	18	U	19	U	18	U
GAMMA-BHC (LINDANE)	UG/KG	PEST / PCB	37	UJ	38	UJ	9	U	9.6	U	9	U
GAMMA-CHLORDANE	UG/KG	PEST / PCB	370	UJ	380	UJ	90	U	96	U	90	U
HEPTACHLOR	UG/KG	PEST / PCB	37	UJ	38	UJ	9	U	9.6	U	9	U
HEPTACHLOR EPOXIDE	UG/KG	PEST / PCB	37	UJ	38	UJ	9	U	9.6	U	9	U
METHOXYCHLOR	UG/KG	PEST / PCB	370	UJ	380	UJ	90	U	96	U	90	U
PCB-1016	UG/KG	PEST / PCB	370	UJ	380	UJ	90	U	96	U	90	U
PCB-1221	UG/KG	PEST / PCB	370	UJ	380	UJ	90	U	96	U	90	U
PCB-1232	UG/KG	PEST / PCB	370	UJ	380	UJ	90	U	96	U	90	U
PCB-1242	UG/KG	PEST / PCB	370	UJ	380	UJ	90	U	96	U	90	U
PCB-1248	UG/KG	PEST / PCB	740	UJ	380	UJ	90	U	96	U	90	U
PCB-1254	UG/KG	PEST / PCB	740	UJ	760	UJ	180	U	190	U	180	U
PCB-1260	UG/KG	PEST / PCB	740	UJ	760	UJ	180	U	190	U	180	U
TOXAPHENE	UG/KG	PEST / PCB	740	UJ	760	UJ	180	U	190	U	180	U
DIESEL	MG/KG	TPHC	20		40		10	U	10	U	10	U
JP4	MG/KG	TPHC	10	U	10	U	10	U	10	U	10	U
JP5	MG/KG	TPHC	10	U	10	U	10	U	10	U	10	U
STODDARD	MG/KG	TPHC										
DIESEL	UG/KG	TPHC										
JP4	UG/KG	TPHC										
JP5	UG/KG	TPHC										
STODDARD	UG/KG	TPHC										
1,1,1-TRICHLOROETHANE	UG/KG	VOA	6	U	6	U	6	U	6	U	6	U
1,1,2,2-TETRACHLOROETHANE	UG/KG	VOA	6	U	6	U	6	U	6	U	6	U
1,1,2-TRICHLOROETHANE	UG/KG	VOA	6	U	6	U	6	U	6	U	6	U
1,1-DICHLOROETHANE	UG/KG	VOA	6	U	6	U	6	U	6	U	6	U
1,1-DICHLOROETHENE	UG/KG	VOA	6	U	6	U	6	U	6	U	6	U
1,2-DICHLOROETHANE	UG/KG	VOA	6	U	6	U	6	U	6	U	6	U
1,2-DICHLOROETHENE (TOTAL)	UG/KG	VOA	6	U	6	U	6	U	6	U	6	U
1,2-DICHLOROPROPANE	UG/KG	VOA	6	U	6	U	6	U	6	U	6	U
2-BUTANONE	UG/KG	VOA	11	U	12	U	11	U	12	U	10	J
2-HEXANONE	UG/KG	VOA	11	U	12	U	11	U	12	U	11	U
4-METHYL-2-PENTANONE	UG/KG	VOA	11	U	12	U	11	U	12	U	11	U
ACETONE	UG/KG	VOA	11	U	39		28	U	12	U	51	
BENZENE	*UG/KG*	VOA	6	U	6	U	6	U	6	U	6	U

NAVSTA-SAN DIEGO
SITE 4 SOILS

		SAMPLE NUMBER:	NS4-BH1-S01-5		NS4-BH1-S02-10		NS4-BH2-S01-5		NS4-BH2-S02-15		NS4-BH2-S03-5 FD	
		SAMPLING DATE:	01/24/91		01/24/91		01/24/91		01/24/91		01/24/91	
		BORING:	BH1		BH1		BH2		BH2		BH2	
		SITE:	NS4		NS4		NS4		NS4		NS4	
		DEPTH:	5		10		5		15		5 FD	
COMPOUND NAME	UNITS	TEST CODE	RESULT	QUALIFIER	RESULT	QUALIFIER	RESULT	QUALIFIER	RESULT	QUALIFIER	RESULT	QUALIFIER
BROMODICHLOROMETHANE	UG/KG	VOA	6	U	6	U	6	U	6	U	6	U
BROMOFORM	UG/KG	VOA	6	U	6	U	6	U	6	U	6	U
BROMOMETHANE	UG/KG	VOA	11	U	12	U	11	U	12	U	11	U
CARBON DISULFIDE	UG/KG	VOA	6	U	6	U	6	U	6	U	6	U
CARBON TETRACHLORIDE	UG/KG	VOA	6	U	6	U	6	U	6	U	6	U
CHLOROBENZENE	UG/KG	VOA	6	U	6	U	6	U	6	U	6	U
CHLOROETHANE	UG/KG	VOA	11	U	12	U	11	U	12	U	11	U
CHLOROFORM	UG/KG	VOA	6	U	6	U	6	U	6	U	6	U
CHLOROMETHANE	UG/KG	VOA	11	U	12	U	11	U	12	U	11	U
CIS-1,3-DICHLOROPROPENE	UG/KG	VOA	6	U	6	U	6	U	6	U	6	U
DIBROMOCHLOROMETHANE	UG/KG	VOA	6	U	6	U	6	U	6	U	6	U
ETHYLBENZENE	UG/KG	VOA	6	U	6	U	6	U	6	U	6	U
METHYLENE CHLORIDE	UG/KG	VOA	8	U	17	U	17	U	7	U	20	U
STYRENE	UG/KG	VOA	6	U	6	U	6	U	6	U	6	U
TETRACHLOROETHENE	UG/KG	VOA	6	U	6	U	6	U	6	U	6	U
TOLUENE	UG/KG	VOA	6	U	6	U	6	U	6	U	6	U
TRANS-1,3-DICHLOROPROPENE	UG/KG	VOA	6	U	6	U	6	U	6	U	6	U
TRICHLOROETHENE	UG/KG	VOA	6	U	6	U	6	U	6	U	6	U
VINYL ACETATE	UG/KG	VOA	11	U	12	U	11	U	12	U	11	U
VINYL CHLORIDE	UG/KG	VOA	11	U	12	U	11	U	12	U	11	U
XYLENES (TOTAL)	UG/KG	VOA	6	U	6	U	6	U	6	U	6	U

NAVSTA-SAN DIEGO
SITE 4 SOILS

		SAMPLE NUMBER:	NS4-BH3-S01-5		NS4-BH3-S02-10		NS4-BH4-S01-5		NS4-BH4-S02-15		NS4-BH5-S01-10	
		SAMPLING DATE:	01/25/91		01/25/91		01/25/91		01/25/91		01/29/91	
		BORING:	BH3		BH3		BH4		BH4		BH5	
		SITE:	NS4		NS4		NS4		NS4		NS4	
		DEPTH:	5		10		5		15		10	
COMPOUND NAME	UNITS	TEST CODE	RESULT	QUALIFIER	RESULT	QUALIFIER	RESULT	QUALIFIER	RESULT	QUALIFIER	RESULT	QUALIFIER
1,2,4-TRICHLOROBENZENE	UG/KG	BNA	3400	U	410	U	350	U	500	U	520	U
1,2-DICHLOROBENZENE	UG/KG	BNA	3400	U	410	U	350	U	500	U	520	U
1,3-DICHLOROBENZENE	UG/KG	BNA	3400	U	410	U	350	U	500	U	520	U
1,4-DICHLOROBENZENE	UG/KG	BNA	3400	U	410	U	350	U	500	U	520	U
2,4,5-TRICHLOROPHENOL	UG/KG	BNA	17000	U	2000	U	1700	U	2400	U	2500	U
2,4,6-TRICHLOROPHENOL	UG/KG	BNA	3400	U	410	U	350	U	500	U	520	U
2,4-DICHLOROPHENOL	UG/KG	BNA	3400	U	410	U	350	U	500	U	520	U
2,4-DIMETHYLPHENOL	UG/KG	BNA	3400	U	410	U	350	U	500	U	520	U
2,4-DINITROPHENOL	UG/KG	BNA	17000	U	2000	U	1700	U	2400	U	2500	U
2,4-DINITROTOLUENE	UG/KG	BNA	3400	U	410	U	350	U	500	U	520	U
2,6-DINITROTOLUENE	UG/KG	BNA	3400	U	410	U	350	U	500	U	520	U
2-CHLORONAPHTHALENE	UG/KG	BNA	3400	U	410	U	350	U	500	U	520	U
2-CHLOROPHENOL	UG/KG	BNA	3400	U	410	U	350	U	500	U	520	U
2-METHYLNAPHTHALENE	UG/KG	BNA	3400	U	410	U	350	U	500	U	520	U
2-METHYLPHENOL	UG/KG	BNA	3400	U	410	U	350	U	500	U	520	U
2-NITROANILINE	UG/KG	BNA	17000	U	2000	U	1700	U	2400	U	2500	U
2-NITROPHENOL	UG/KG	BNA	3400	U	410	U	350	U	500	U	520	U
3,3'-DICHLOROBENZIDINE	UG/KG	BNA	6900	U	820	U	690	U	1000	U	1000	U
3-NITROANILINE	UG/KG	BNA	17000	U	2000	U	1700	U	2400	U	2500	U
4,6-DINITRO-2-METHYLPHENOL	UG/KG	BNA	17000	U	2000	U	1700	U	2400	U	2500	U
4-BROMOPHENYL-PHENYLETHER	UG/KG	BNA	3400	U	410	U	350	U	500	U	520	U
4-CHLORO-3-METHYLPHENOL	UG/KG	BNA	3400	U	410	U	350	U	500	U	520	U
4-CHLOROANILINE	UG/KG	BNA	3400	U	410	U	350	U	500	U	520	U
4-CHLOROPHENYL-PHENYLETHER	UG/KG	BNA	3400	U	410	U	350	U	500	U	520	U
4-METHYLPHENOL	UG/KG	BNA	3400	U	410	U	350	U	500	U	520	U
4-NITROANILINE	UG/KG	BNA	17000	U	2000	U	1700	U	2400	U	2500	U
4-NITROPHENOL	UG/KG	BNA	17000	U	2000	U	1700	U	2400	U	2500	U
ACENAPHTHENE	UG/KG	BNA	3400	U	410	U	350	U	500	U	520	U
ACENAPHTHYLENE	UG/KG	BNA	3400	U	410	U	350	U	500	U	520	U
ANTHRACENE	UG/KG	BNA	3400	U	410	U	350	U	500	U	520	U
BENZO(A)ANTHRACENE	UG/KG	BNA	3400	U	410	U	350	U	500	U	520	U
BENZO(A)PYRENE	UG/KG	BNA	3400	U	410	U	350	U	500	U	520	U
BENZO(B)FLUORANTHENE	UG/KG	BNA	3400	U	410	U	350	U	500	U	520	U
BENZO(G,H,I)PERYLENE	UG/KG	BNA	3400	U	410	U	350	U	500	U	520	U
BENZO(K)FLUORANTHENE	UG/KG	BNA	3400	U	410	U	350	U	500	U	520	U
BENZOIC ACID	UG/KG	BNA	17000	U	2000	U	1700	U	2400	U	2500	U
BENZYL ALCOHOL	UG/KG	BNA	3400	U	410	U	350	U	500	U	520	U
BIS(2-CHLOROETHOXY)METHANE	UG/KG	BNA	3400	U	410	U	350	U	500	U	520	U
BIS(2-CHLOROETHYL)ETHER	UG/KG	BNA	3400	U	410	U	350	U	500	U	520	U
BIS(2-CHLOROISOPROPYL)ETHER	UG/KG	BNA	3400	U	410	U	350	U	500	U	520	U
BIS(2-ETHYLHEXYL)PHTHALATE	UG/KG	BNA	3400	U	410	U	350	U	500	U	520	U
BUTYLBENZYLPHTHALATE	UG/KG	BNA	3400	U	410	U	350	U	500	U	520	U
CHRYSENE	UG/KG	BNA	3400	U	410	U	350	U	500	U	520	U
DI-N-BUTYLPHTHALATE	UG/KG	BNA	3400	U	410	U	350	U	500	U	520	U
DI-N-OCTYLPHTHALATE	UG/KG	BNA	3400	U	410	U	350	U	500	U	520	U
DIBENZ(A,H)ANTHRACENE	UG/KG	BNA	3400	U	410	U	350	U	500	U	520	U
DIBENZOFURAN	UG/KG	BNA	3400	U	410	U	350	U	500	U	520	U
DIETHYLPHTHALATE	UG/KG	BNA	3400	U	410	U	350	U	500	U	520	U
DIMETHYLPHTHALATE	UG/KG	BNA	3400	U	410	U	350	U	500	U	520	U
FLUORANTHENE	UG/KG	BNA	3400	U	410	U	350	U	500	U	520	U
FLUORENE	UG/KG	BNA	3400	U	410	U	350	U	500	U	520	U

NAVSTA-SAN DIEGO
SITE 4 SOILS

		SAMPLE NUMBER:	NS4-BH3-S01-5		NS4-BH3-S02-10		NS4-BH4-S01-5		NS4-BH4-S02-15		NS4-BH5-S01-10	
		SAMPLING DATE:	01/25/91		01/25/91		01/25/91		01/25/91		01/29/91	
		BORING:	BH3		BH3		BH4		BH4		BH5	
		SITE:	NS4		NS4		NS4		NS4		NS4	
		DEPTH:	5		10		5		15		10	
COMPOUND NAME	UNITS	TEST CODE	RESULT	QUALIFIER	RESULT	QUALIFIER	RESULT	QUALIFIER	RESULT	QUALIFIER	RESULT	QUALIFIER
HEXACHLOROBENZENE	UG/KG	BNA	3400	U	410	U	350	U	500	U	520	U
HEXACHLOROBUTADIENE	UG/KG	BNA	3400	U	410	U	350	U	500	U	520	U
HEXACHLOROCYCLOPENTADIENE	UG/KG	BNA	3400	U	410	U	350	U	500	U	520	U
HEXACHLOROETHANE	UG/KG	BNA	3400	U	410	U	350	U	500	U	520	U
INDENO(1,2,3-C,D)PYRENE	UG/KG	BNA	3400	U	410	U	350	U	500	U	520	U
ISOPHORONE	UG/KG	BNA	3400	U	410	U	350	U	500	U	520	U
N-NITROSO-DI-N-PROPYLAMINE	UG/KG	BNA	3400	U	410	U	350	U	500	U	520	U
N-NITROSODIPHENYLAMINE (1)	UG/KG	BNA	3400	U	410	U	350	U	500	U	520	U
NAPHTHALENE	UG/KG	BNA	3400	U	410	U	350	U	500	U	520	U
NITROBENZENE	UG/KG	BNA	3400	U	410	U	350	U	500	U	520	U
PENTACHLOROPHENOL	UG/KG	BNA	17000	U	2000	U	1700	U	2400	U	2500	U
PHENANTHRENE	UG/KG	BNA	3400	U	410	U	350	U	500	U	520	U
PHENOL	UG/KG	BNA	3400	U	410	U	350	U	500	U	520	U
PYRENE	UG/KG	BNA	3400	U	410	U	350	U	500	U	520	U
ANTIMONY	MG/KG	CAC METALS	3.7	U	4.5	U	3.9	U	5.5	U	5.9	U
ARSENIC	MG/KG	CAC METALS	1.4	B	2.8		3.6		6.3		5.9	B
BARIUM	MG/KG	CAC METALS	26.8	B	28.3	B	29.7	B	49.9	B	125	
BERYLLIUM	MG/KG	CAC METALS	0.79	B	0.96	B	0.90	B	2.4		4.1	
CADMIUM	MG/KG	CAC METALS	0.79	U	0.94	U	0.82	U	1.2	U	1.2	U
CHROMIUM	MG/KG	CAC METALS	5.1		6.4		4.9		20.3		25.6	
COBALT	MG/KG	CAC METALS	3.0	B	2.4	B	2.4	B	7.2	B	12.6	B
COPPER	MG/KG	CAC METALS	6.9	U	7.2	U	12.6	U	27.6	U	25.7	U
LEAD	MG/KG	CAC METALS	3.8	U	2.5	U	7.5		5.0	U	15.7	
MERCURY	MG/KG	CAC METALS	0.16	U	0.19	U	0.16	U	0.23	U	0.58	
MOLYBDENUM	MG/KG	CAC METALS	1.4	U	2.1	U	1.7	U	9.1	U	3.3	U
NICKEL	MG/KG	CAC METALS	1.8	U	2.1	U	1.9	U	4.8	B	6.0	U
SELENIUM	MG/KG	CAC METALS	0.39	U	0.47	U	0.41	U	0.58	U	0.62	U
SILVER	MG/KG	CAC METALS	1.4	U	0.97	U	1.1	U	1.5	U	3.4	U
THALLIUM	MG/KG	CAC METALS	0.19	U	0.23	U	0.20	U	0.29	B	0.62	U
VANADIUM	MG/KG	CAC METALS	19.8		15.2		18.7		56.7		73.9	
ZINC	MG/KG	CAC METALS	19.3	U	20.1	U	34.9	U	42.2	U	77.8	U
ANTIMONY	UG/KG	CAC METALS										
ARSENIC	UG/KG	CAC METALS										
BARIUM	UG/KG	CAC METALS										
BERYLLIUM	UG/KG	CAC METALS										
CADMIUM	UG/KG	CAC METALS										
CHROMIUM	UG/KG	CAC METALS										
COBALT	UG/KG	CAC METALS										
COPPER	UG/KG	CAC METALS										
LEAD	UG/KG	CAC METALS										
MERCURY	UG/KG	CAC METALS										
MOLYBDENUM	UG/KG	CAC METALS										
NICKEL	UG/KG	CAC METALS										
SELENIUM	UG/KG	CAC METALS										
SILVER	UG/KG	CAC METALS										
THALLIUM	UG/KG	CAC METALS										
VANADIUM	UG/KG	CAC METALS										
ZINC	UG/KG	CAC METALS										
CAC WET EXTRACTION	DATE	CAC WET EX										
COPPER	MG/L	CAC WET EX										
LEAD	MG/L	CAC WET EX										

NAVSTA-SAN DIEGO
SITE 4 SOILS

		SAMPLE NUMBER:	NS4-BH3-S01-5		NS4-BH3-S02-10		NS4-BH4-S01-5		NS4-BH4-S02-15		NS4-BH5-S01-10	
		SAMPLING DATE:	01/25/91		01/25/91		01/25/91		01/25/91		01/29/91	
		BORING:	BH3		BH3		BH4		BH4		BH5	
		SITE:	NS4		NS4		NS4		NS4		NS4	
		DEPTH:	5		10		5		15		10	
COMPOUND NAME	UNITS	TEST CODE	RESULT	QUALIFIER	RESULT	QUALIFIER	RESULT	QUALIFIER	RESULT	QUALIFIER	RESULT	QUALIFIER
TOTAL CYANIDE	MG/KG	CN	1	UJ	1	UJ	1	UJ	1	UJ	1	U
TOTAL CYANIDE	MG/L	CN										
4,4'-DDD	UG/KG	PEST / PCB	50	U	20	U	17	U	24	U	25	U
4,4'-DDE	UG/KG	PEST / PCB	50	U	20	U	17	U	24	U	25	U
4,4'-DDT	UG/KG	PEST / PCB	50	U	20	U	17	U	24	U	25	U
ALDRIN	UG/KG	PEST / PCB	25	U	10	U	8.4	U	12	U	13	U
ALPHA-BHC	UG/KG	PEST / PCB	25	U	10	U	8.4	U	12	U	13	U
ALPHA-CHLORDANE	UG/KG	PEST / PCB	250	U	100	U	84	U	120	U	130	U
BETA-BHC	UG/KG	PEST / PCB	25	U	10	U	8.4	U	12	U	13	U
DELTA-BHC	UG/KG	PEST / PCB	25	U	10	U	8.4	U	12	U	13	U
DIBUTYL CHLORENDATE	UG/KG	PEST / PCB	101		93		104		60		64	
DIELDRIN	UG/KG	PEST / PCB	50	U	20	U	17	U	24	U	25	U
ENDOSULFAN I	UG/KG	PEST / PCB	25	U	10	U	8.4	U	12	U	13	U
ENDOSULFAN II	UG/KG	PEST / PCB	50	U	20	U	17	U	24	U	25	U
ENDOSULFAN SULFATE	UG/KG	PEST / PCB	50	U	20	U	17	U	24	U	25	U
ENDRIN	UG/KG	PEST / PCB	50	U	20	U	17	U	24	U	25	U
ENDRIN KETONE	UG/KG	PEST / PCB	50	U	20	U	17	U	24	U	25	U
GAMMA-BHC (LINDANE)	UG/KG	PEST / PCB	25	U	10	U	8.4	U	12	U	13	U
GAMMA-CHLORDANE	UG/KG	PEST / PCB	250	U	100	U	84	U	120	U	130	U
HEPTACHLOR	UG/KG	PEST / PCB	25	U	10	U	8.4	U	12	U	13	U
HEPTACHLOR EPOXIDE	UG/KG	PEST / PCB	25	U	10	U	8.4	U	12	U	13	U
METHOXYCHLOR	UG/KG	PEST / PCB	250	U	100	U	84	U	120	U	130	U
PCB-1016	UG/KG	PEST / PCB	250	U	100	U	84	U	120	U	130	U
PCB-1221	UG/KG	PEST / PCB	250	U	100	U	84	U	120	U	130	U
PCB-1232	UG/KG	PEST / PCB	250	U	100	U	84	U	120	U	130	U
PCB-1242	UG/KG	PEST / PCB	250	U	100	U	84	U	120	U	130	U
PCB-1248	UG/KG	PEST / PCB	250	U	100	U	84	U	120	U	130	U
PCB-1254	UG/KG	PEST / PCB	500	U	200	U	170	U	240	U	250	U
PCB-1260	UG/KG	PEST / PCB	500	U	200	U	170	U	240	U	250	U
TOXAPHENE	UG/KG	PEST / PCB	500	U	200	U	170	U	240	U	250	U
DIESEL	MG/KG	TPHC	20		10	U	10	U	10	U		
JP4	MG/KG	TPHC	10	U	10	U	10	U	10	U		
JP5	MG/KG	TPHC	10	U	10	U	10	U	10	U		
STODDARD	MG/KG	TPHC									10	U
DIESEL	UG/KG	TPHC										
JP4	UG/KG	TPHC										
JP5	UG/KG	TPHC										
STODDARD	UG/KG	TPHC										
1,1,1-TRICHLOROETHANE	UG/KG	VOA	5	U	6	U	5	U	8	U	8	U
1,1,2,2-TETRACHLOROETHANE	UG/KG	VOA	5	U	6	U	5	U	8	U	8	U
1,1,2-TRICHLOROETHANE	UG/KG	VOA	5	U	6	U	5	U	8	U	8	U
1,1-DICHLOROETHANE	UG/KG	VOA	5	U	6	U	5	U	8	U	8	U
1,1-DICHLOROETHENE	UG/KG	VOA	5	U	6	U	5	U	8	U	8	U
1,2-DICHLOROETHANE	UG/KG	VOA	5	U	6	U	5	U	8	U	8	U
1,2-DICHLOROETHENE (TOTAL)	UG/KG	VOA	5	U	6	U	5	U	8	U	8	U
1,2-DICHLOROPROPANE	UG/KG	VOA	5	U	6	U	5	U	8	U	8	U
2-BUTANONE	UG/KG	VOA	10	U	12	U	11	U	15	U	16	U
2-HEXANONE	UG/KG	VOA	10	U	12	U	11	U	15	U	16	U
4-METHYL-2-PENTANONE	UG/KG	VOA	10	U	12	U	11	U	15	U	16	U
ACETONE	UG/KG	VOA	10	U	15	U	11	U	20	U	60	U
BENZENE	UG/KG	VOA	5	U	6	U	5	U	8	U	8	U

NAVSTA-SAN DIEGO
SITE 4 SOILS

		SAMPLE NUMBER:	NS4-BH3-S01-5		NS4-BH3-S02-10		NS4-BH4-S01-5		NS4-BH4-S02-15		NS4-BH5-S01-10	
		SAMPLING DATE:	01/25/91		01/25/91		01/25/91		01/25/91		01/29/91	
		BORING:	BH3		BH3		BH4		BH4		BH5	
		SITE:	NS4		NS4		NS4		NS4		NS4	
		DEPTH:	5		10		5		15		10	
COMPOUND NAME	UNITS	TEST CODE	RESULT	QUALIFIER	RESULT	QUALIFIER	RESULT	QUALIFIER	RESULT	QUALIFIER	RESULT	QUALIFIER
BROMODICHLOROMETHANE	UG/KG	VOA	5	U	6	U	5	U	8	U	8	U
BROMOFORM	UG/KG	VOA	5	U	6	U	5	U	8	U	8	U
BROMOMETHANE	UG/KG	VOA	10	U	12	U	11	U	15	U	16	U
CARBON DISULFIDE	UG/KG	VOA	5	U	6	U	5	U	250		19	
CARBON TETRACHLORIDE	UG/KG	VOA	5	U	6	U	5	U	8	U	8	U
CHLOROBENZENE	UG/KG	VOA	5	U	6	U	5	U	8	U	8	U
CHLOROETHANE	UG/KG	VOA	10	U	12	U	11	U	15	U	16	U
CHLOROFORM	UG/KG	VOA	5	U	6	U	5	U	8	U	8	U
CHLOROMETHANE	UG/KG	VOA	10	U	12	U	11	U	15	U	16	U
CIS-1,3-DICHLOROPROPENE	UG/KG	VOA	5	U	6	U	5	U	8	U	8	U
DIBROMOCHLOROMETHANE	UG/KG	VOA	5	U	6	U	5	U	8	U	8	U
ETHYLBENZENE	UG/KG	VOA	5	U	6	U	5	U	8	U	8	U
METHYLENE CHLORIDE	UG/KG	VOA	7	U	11	U	8	U	14	U	11	U
STYRENE	UG/KG	VOA	5	U	6	U	5	U	8	U	8	U
TETRACHLOROETHENE	UG/KG	VOA	5	U	6	U	5	U	8	U	8	U
TOLUENE	UG/KG	VOA	5	U	6	U	5	U	8	U	8	U
TRANS-1,3-DICHLOROPROPENE	UG/KG	VOA	5	U	6	U	5	U	8	U	8	U
TRICHLOROETHENE	UG/KG	VOA	5	U	6	U	5	U	8	U	8	U
VINYL ACETATE	UG/KG	VOA	10	U	12	U	11	U	15	U	16	U
VINYL CHLORIDE	UG/KG	VOA	10	U	12	U	11	U	15	U	16	U
XYLENES (TOTAL)	UG/KG	VOA	5	U	6	U	5	U	8	U	8	U

NAVSTA-SAN DIEGO
SITE 4 SOILS

		SAMPLE NUMBER:	NS4-BH5-S02-15		NS4-BH6-S01-5		NS4-BH6-S02-10		NS4-BH6-S03-5-FD		NS4-BH6-S06-15	
		SAMPLING DATE:	01/29/91		01/28/91		01/28/91		01/28/91		01/28/91	
		BORING:	BH5		BH6		BH6		BH6		BH6	
		SITE:	NS4		NS4		NS4		NS4		NS4	
		DEPTH:	15		5		10		5-FD		15	
COMPOUND NAME	UNITS	TEST CODE	RESULT	QUALIFIER	RESULT	QUALIFIER	RESULT	QUALIFIER	RESULT	QUALIFIER	RESULT	QUALIFIER
1,2,4-TRICHLOROBENZENE	UG/KG	BNA	470	U	340	U	410	U	350	U	460	U
1,2-DICHLOROBENZENE	UG/KG	BNA	470	U	340	U	410	U	350	U	460	U
1,3-DICHLOROBENZENE	UG/KG	BNA	470	U	340	U	410	U	350	U	460	U
1,4-DICHLOROBENZENE	UG/KG	BNA	470	U	340	U	410	U	350	U	460	U
2,4,5-TRICHLOROPHENOL	UG/KG	BNA	2300	U	1700	U	2000	U	1700	U	2200	U
2,4,6-TRICHLOROPHENOL	UG/KG	BNA	470	U	340	U	410	U	350	U	460	U
2,4-DICHLOROPHENOL	UG/KG	BNA	470	U	340	U	410	U	350	U	460	U
2,4-DIMETHYLPHENOL	UG/KG	BNA	470	U	340	U	410	U	350	U	460	U
2,4-DINITROPHENOL	UG/KG	BNA	2300	U	1700	U	2000	U	1700	U	2200	U
2,4-DINITROTOLUENE	UG/KG	BNA	470	U	340	U	410	U	350	U	460	U
2,6-DINITROTOLUENE	UG/KG	BNA	470	U	340	U	410	U	350	U	460	U
2-CHLORONAPHTHALENE	UG/KG	BNA	470	U	340	U	410	U	350	U	460	U
2-CHLOROPHENOL	UG/KG	BNA	470	U	340	U	410	U	350	U	460	U
2-METHYLNAPHTHALENE	UG/KG	BNA	470	U	340	U	410	U	350	U	460	U
2-METHYLPHENOL	UG/KG	BNA	470	U	340	U	410	U	350	U	460	U
2-NITROANILINE	UG/KG	BNA	2300	U	1700	U	2000	U	1700	U	2200	U
2-NITROPHENOL	UG/KG	BNA	470	U	340	U	410	U	350	U	460	U
3,3'-DICHLOROBENZIDINE	UG/KG	BNA	940	U	690	U	820	U	710	U	920	U
3-NITROANILINE	UG/KG	BNA	2300	U	1700	U	2000	U	1700	U	2200	U
4,6-DINITRO-2-METHYLPHENOL	UG/KG	BNA	2300	U	1700	U	2000	U	1700	U	2200	U
4-BROMOPHENYL-PHENYLETHER	UG/KG	BNA	470	U	340	U	410	U	350	U	460	U
4-CHLORO-3-METHYLPHENOL	UG/KG	BNA	470	U	340	U	410	U	350	U	460	U
4-CHLOROANILINE	UG/KG	BNA	470	U	340	U	410	U	350	U	460	U
4-CHLOROPHENYL-PHENYLETHER	UG/KG	BNA	470	U	340	U	410	U	350	U	460	U
4-METHYLPHENOL	UG/KG	BNA	470	U	340	U	410	U	350	U	460	U
4-NITROANILINE	UG/KG	BNA	2300	U	1700	U	2000	U	1700	U	2200	U
4-NITROPHENOL	UG/KG	BNA	2300	U	1700	U	2000	U	1700	U	2200	U
ACENAPHTHENE	UG/KG	BNA	470	U	340	U	410	U	350	U	460	U
ACENAPHTHYLENE	UG/KG	BNA	470	U	340	U	410	U	350	U	460	U
ANTHRACENE	UG/KG	BNA	470	U	340	U	410	U	350	U	460	U
BENZO(A)ANTHRACENE	UG/KG	BNA	470	U	340	U	410	U	350	U	460	U
BENZO(A)PYRENE	UG/KG	BNA	470	U	340	U	410	U	350	U	460	U
BENZO(B)FLUORANTHENE	UG/KG	BNA	470	U	340	U	410	U	350	U	460	U
BENZO(G,H,I)PERYLENE	UG/KG	BNA	470	U	340	U	410	U	350	U	460	U
BENZO(K)FLUORANTHENE	UG/KG	BNA	470	U	340	U	410	U	350	U	460	U
BENZOIC ACID	UG/KG	BNA	2300	U	1700	U	2000	U	1700	U	2200	U
BENZYL ALCOHOL	UG/KG	BNA	470	U	340	U	410	U	350	U	460	U
BIS(2-CHLOROETHOXY)METHANE	UG/KG	BNA	470	U	340	U	410	U	350	U	460	U
BIS(2-CHLOROETHYL)ETHER	UG/KG	BNA	470	U	340	U	410	U	350	U	460	U
BIS(2-CHLOROISOPROPYL)ETHER	UG/KG	BNA	470	U	340	U	410	U	350	U	460	U
BIS(2-ETHYLHEXYL)PHTHALATE	UG/KG	BNA	470	U	340	U	410	U	350	U	460	U
BUTYLBENZYLPHTHALATE	UG/KG	BNA	470	U	340	U	410	U	350	U	460	U
CHRYSENE	UG/KG	BNA	470	U	340	U	410	U	350	U	460	U
DI-N-BUTYLPHTHALATE	UG/KG	BNA	470	U	340	U	410	U	350	U	460	U
DI-N-OCTYLPHTHALATE	UG/KG	BNA	470	U	340	U	410	U	350	U	460	U
DIBENZ(A,H)ANTHRACENE	UG/KG	BNA	470	U	340	U	410	U	350	U	460	U
DIBENZOFURAN	UG/KG	BNA	470	U	340	U	410	U	350	U	460	U
DIETHYLPHTHALATE	UG/KG	BNA	470	U	340	U	410	U	350	U	460	U
DIMETHYLPHTHALATE	UG/KG	BNA	470	U	340	U	410	U	350	U	460	U
FLUORANTHENE	UG/KG	BNA	470	U	340	U	410	U	350	U	460	U
FLUORENE	UG/KG	BNA	470	U	340	U	410	U	350	U	460	U

NAVSTA-SAN DIEGO
SITE 4 SOILS

		SAMPLE NUMBER:	NS4-BH5-S02-15		NS4-BH6-S01-5		NS4-BH6-S02-10		NS4-BH6-S03-5-FD		NS4-BH6-S06-15	
		SAMPLING DATE:	01/29/91		01/28/91		01/28/91		01/28/91		01/28/91	
		BORING:	BH5		BH6		BH6		BH6		BH6	
		SITE:	NS4		NS4		NS4		NS4		NS4	
		DEPTH:	15		5		10		5-FD		15	
COMPOUND NAME	UNITS	TEST CODE	RESULT	QUALIFIER	RESULT	QUALIFIER	RESULT	QUALIFIER	RESULT	QUALIFIER	RESULT	QUALIFIER
HEXACHLOROBENZENE	UG/KG	BNA	470	U	340	U	410	U	350	U	460	U
HEXACHLOROBUTADIENE	UG/KG	BNA	470	U	340	U	410	U	350	U	460	U
HEXACHLOROCYCLOPENTADIENE	UG/KG	BNA	470	U	340	U	410	U	350	U	460	U
HEXACHLOROETHANE	UG/KG	BNA	470	U	340	U	410	U	350	U	460	U
INDENO(1,2,3-C,D)PYRENE	UG/KG	BNA	470	U	340	U	410	U	350	U	460	U
ISOPHORONE	UG/KG	BNA	470	U	340	U	410	U	350	U	460	U
N-NITROSO-DI-N-PROPYLAMINE	UG/KG	BNA	470	U	340	U	410	U	350	U	460	U
N-NITROSODIPHENYLAMINE (1)	UG/KG	BNA	470	U	340	U	410	U	350	U	460	U
NAPHTHALENE	UG/KG	BNA	470	U	340	U	410	U	350	U	460	U
NITROBENZENE	UG/KG	BNA	470	U	340	U	410	U	350	U	460	U
PENTACHLOROPHENOL	UG/KG	BNA	2300	U	1700	U	2000	U	1700	U	2200	U
PHENANTHRENE	UG/KG	BNA	470	U	340	U	410	U	350	U	460	U
PHENOL	UG/KG	BNA	470	U	340	U	410	U	350	U	460	U
PYRENE	UG/KG	BNA	470	U	340	U	410	U	350	U	460	U
ANTIMONY	MG/KG	CAC METALS	5.3	U	3.9	U	4.4	U	3.8	U	5.1	U
ARSENIC	MG/KG	CAC METALS	0.26	U	1.8	B	3.6		1.8	B	2.6	
BARIUM	MG/KG	CAC METALS	34.1	B	28.3	B	47.1		27.9	B	35.9	B
BERYLLIUM	MG/KG	CAC METALS	2.1		0.41	B	1.9		0.42	B	1.9	
CADMIUM	MG/KG	CAC METALS	1.1	U	0.82	U	0.93	U	0.80	U	1.1	U
CHROMIUM	MG/KG	CAC METALS	13.9		3.5		12.8		4.1		16.9	
COBALT	MG/KG	CAC METALS	4.8	B	1.5	B	5.5	B	1.4	B	5.3	B
COPPER	MG/KG	CAC METALS	7.7	U	1.5	U	20.5	U	24.3	U	79.4	U
LEAD	MG/KG	CAC METALS	2.1	U	1.5	U	7.1	U	2.4	U	3.3	U
MERCURY	MG/KG	CAC METALS	0.21	U	0.16	U	0.19	U	0.16	U	0.21	U
MOLYBDENUM	MG/KG	CAC METALS	2.0	U	1.4	U	2.6	B	1.4	U	3.6	B
NICKEL	MG/KG	CAC METALS	2.5	U	1.8	U	3.0	B	1.8	U	4.2	B
SELENIUM	MG/KG	CAC METALS	0.52	U	0.39	U	0.48	U	0.42	U	0.51	U
SILVER	MG/KG	CAC METALS	1.7	U	0.77	U	1.7	U	0.83	U	1.5	U
THALLIUM	MG/KG	CAC METALS	0.52	B	0.20	B	0.24	U	0.40	B	0.49	B
VANADIUM	MG/KG	CAC METALS	28.4		9.8	B	30.9		11.3		32.7	
ZINC	MG/KG	CAC METALS	27.5	U	8.3	U	30.0	U	13.5	U	35.0	U
ANTIMONY	UG/KG	CAC METALS										
ARSENIC	UG/KG	CAC METALS										
BARIUM	UG/KG	CAC METALS										
BERYLLIUM	UG/KG	CAC METALS										
CADMIUM	UG/KG	CAC METALS										
CHROMIUM	UG/KG	CAC METALS										
COBALT	UG/KG	CAC METALS										
COPPER	UG/KG	CAC METALS										
LEAD	UG/KG	CAC METALS										
MERCURY	UG/KG	CAC METALS										
MOLYBDENUM	UG/KG	CAC METALS										
NICKEL	UG/KG	CAC METALS										
SELENIUM	UG/KG	CAC METALS										
SILVER	UG/KG	CAC METALS										
THALLIUM	UG/KG	CAC METALS										
VANADIUM	UG/KG	CAC METALS										
ZINC	UG/KG	CAC METALS										
CAC WET EXTRACTION	DATE	CAC WET EX										
COPPER	MG/L	CAC WET EX										
LEAD	MG/L	CAC WET EX										

NAVSTA-SAN DIEGO
SITE 4 SOILS

		SAMPLE NUMBER:	NS4-BH5-S02-15		NS4-BH6-S01-5		NS4-BH6-S02-10		NS4-BH6-S03-5-FD		NS4-BH6-S06-15	
		SAMPLING DATE:	01/29/91		01/28/91		01/28/91		01/28/91		01/28/91	
		BORING:	BH5		BH6		BH6		BH6		BH6	
		SITE:	NS4		NS4		NS4		NS4		NS4	
		DEPTH:	15		5		10		5-FD		15	
COMPOUND NAME	UNITS	TEST CODE	RESULT	QUALIFIER	RESULT	QUALIFIER	RESULT	QUALIFIER	RESULT	QUALIFIER	RESULT	QUALIFIER
TOTAL CYANIDE	MG/KG	CN	1	U	1	UJ	1	UJ	1	UJ	1	UJ
TOTAL CYANIDE	MG/L	CN										
4,4'-DDD	UG/KG	PEST / PCB	23	U	17	U	20	U	17	U	22	U
4,4'-DDE	UG/KG	PEST / PCB	23	U	17	U	20	U	17	U	22	U
4,4'-DDT	UG/KG	PEST / PCB	23	U	17	U	20	U	17	U	22	U
ALDRIN	UG/KG	PEST / PCB	11	U	8.3	U	10	U	8.6	U	11	U
ALPHA-BHC	UG/KG	PEST / PCB	11	U	8.3	U	10	U	8.6	U	11	U
ALPHA-CHLORDANE	UG/KG	PEST / PCB	110	U	83	U	100	U	86	U	110	U
BETA-BHC	UG/KG	PEST / PCB	11	U	8.3	U	10	U	8.6	U	11	U
DELTA-BHC	UG/KG	PEST / PCB	11	U	8.3	U	10	U	8.6	U	11	U
DIBUTYL CHLORENDATE	UG/KG	PEST / PCB	91		88		87		102		37	
DIELDRIN	UG/KG	PEST / PCB	23	U	17	U	20	U	17	U	22	U
ENDOSULFAN I	UG/KG	PEST / PCB	11	U	8.3	U	10	U	8.6	U	11	U
ENDOSULFAN II	UG/KG	PEST / PCB	23	U	17	U	20	U	17	U	22	U
ENDOSULFAN SULFATE	UG/KG	PEST / PCB	23	U	17	U	20	U	17	U	22	U
ENDRIN	UG/KG	PEST / PCB	23	U	17	U	20	U	17	U	22	U
ENDRIN KETONE	UG/KG	PEST / PCB	23	U	17	U	20	U	17	U	22	U
GAMMA-BHC (LINDANE)	UG/KG	PEST / PCB	11	U	8.3	U	10	U	8.6	U	11	U
GAMMA-CHLORDANE	UG/KG	PEST / PCB	110	U	83	U	100	U	86	U	110	U
HEPTACHLOR	UG/KG	PEST / PCB	11	U	8.3	U	10	U	8.6	U	11	U
HEPTACHLOR EPOXIDE	UG/KG	PEST / PCB	11	U	8.3	U	10	U	8.6	U	11	U
METHOXYCHLOR	UG/KG	PEST / PCB	110	U	83	U	100	U	86	U	110	U
PCB-1016	UG/KG	PEST / PCB	110	U	83	U	100	U	86	U	110	U
PCB-1221	UG/KG	PEST / PCB	110	U	83	U	100	U	86	U	110	U
PCB-1232	UG/KG	PEST / PCB	110	U	83	U	100	U	86	U	110	U
PCB-1242	UG/KG	PEST / PCB	110	U	83	U	100	U	86	U	110	U
PCB-1248	UG/KG	PEST / PCB	110	U	83	U	100	U	86	U	110	U
PCB-1254	UG/KG	PEST / PCB	230	U	170	U	200	U	170	U	220	U
PCB-1260	UG/KG	PEST / PCB	230	U	170	U	200	U	170	U	220	U
TOXAPHENE	UG/KG	PEST / PCB	230	U	170	U	200	U	170	U	220	U
DIESEL	MG/KG	TPHC										
JP4	MG/KG	TPHC										
JP5	MG/KG	TPHC										
STODDARD	MG/KG	TPHC	10	U	10	U	10	U	10	U	10	U
DIESEL	UG/KG	TPHC										
JP4	UG/KG	TPHC										
JP5	UG/KG	TPHC										
STODDARD	UG/KG	TPHC										
1,1,1-TRICHLOROETHANE	UG/KG	VOA	7	U	5	U	6	U	5	U	12	U
1,1,2,2-TETRACHLOROETHANE	UG/KG	VOA	7	U	5	U	6	U	5	U	12	U
1,1,2-TRICHLOROETHANE	UG/KG	VOA	7	U	5	U	6	U	5	U	12	U
1,1-DICHLOROETHANE	UG/KG	VOA	7	U	5	U	6	U	5	U	12	U
1,1-DICHLOROETHENE	UG/KG	VOA	7	U	5	U	6	U	5	U	12	U
1,2-DICHLOROETHANE	UG/KG	VOA	7	U	5	U	6	U	5	U	12	U
1,2-DICHLOROETHENE (TOTAL)	UG/KG	VOA	7	U	5	U	6	U	5	U	12	U
1,2-DICHLOROPROPANE	UG/KG	VOA	7	U	5	U	6	U	5	U	12	U
2-BUTANONE	UG/KG	VOA	14	U	10	U	12	U	11	U	23	U
2-HEXANONE	UG/KG	VOA	14	U	10	U	12	U	11	U	23	U
4-METHYL-2-PENTANONE	UG/KG	VOA	14	U	10	U	12	U	11	U	23	U
ACETONE	UG/KG	VOA	14	U	10	U	26	U	11	U	23	U
BENZENE	*UG/KG*	*VOA*	7	U	5	U	6	U	5	U	12	U

NAVSTA-SAN DIEGO
SITE 4 SOILS

		SAMPLE NUMBER:	NS4-BH5-S02-15		NS4-BH6-S01-5		NS4-BH6-S02-10		NS4-BH6-S03-5-FD		NS4-BH6-S06-15	
		SAMPLING DATE:	01/29/91		01/28/91		01/28/91		01/28/91		01/28/91	
		BORING:	BH5		BH6		BH6		BH6		BH6	
		SITE:	NS4		NS4		NS4		NS4		NS4	
		DEPTH:	15		5		10		5-FD		15	
COMPOUND NAME	UNITS	TEST CODE	RESULT	QUALIFIER	RESULT	QUALIFIER	RESULT	QUALIFIER	RESULT	QUALIFIER	RESULT	QUALIFIER
BROMODICHLOROMETHANE	UG/KG	VOA	7	U	5	U	6	U	5	U	12	U
BROMOFORM	UG/KG	VOA	7	U	5	U	6	U	5	U	12	U
BROMOMETHANE	UG/KG	VOA	14	U	10	U	12	U	11	U	23	U
CARBON DISULFIDE	UG/KG	VOA	60		5	U	6	U	5	U	370	
CARBON TETRACHLORIDE	UG/KG	VOA	7	U	5	U	6	U	5	U	12	U
CHLOROBENZENE	UG/KG	VOA	7	U	5	U	6	U	5	U	12	U
CHLOROETHANE	UG/KG	VOA	14	U	10	U	12	U	11	U	23	U
CHLOROFORM	UG/KG	VOA	7	U	5	U	6	U	5	U	12	U
CHLOROMETHANE	UG/KG	VOA	14	U	10	U	12	U	11	U	23	U
CIS-1,3-DICHLOROPROPENE	UG/KG	VOA	7	U	5	U	6	U	5	U	12	U
DIBROMOCHLOROMETHANE	UG/KG	VOA	7	U	5	U	6	U	5	U	12	U
ETHYLBENZENE	UG/KG	VOA	7	U	5	U	6	U	5	U	12	U
METHYLENE CHLORIDE	UG/KG	VOA	7	U	9	U	28	U	13	U	28	U
STYRENE	UG/KG	VOA	7	U	5	U	6	U	5	U	12	U
TETRACHLOROETHENE	UG/KG	VOA	7	U	5	U	6	U	5	U	12	U
TOLUENE	UG/KG	VOA	7	U	5	U	6	U	5	U	12	U
TRANS-1,3-DICHLOROPROPENE	UG/KG	VOA	7	U	5	U	6	U	5	U	12	U
TRICHLOROETHENE	UG/KG	VOA	7	U	5	U	6	U	5	U	12	U
VINYL ACETATE	UG/KG	VOA	14	U	10	U	12	U	11	U	23	U
VINYL CHLORIDE	UG/KG	VOA	14	U	10	U	12	U	11	U	23	U
XYLENES (TOTAL)	UG/KG	VOA	7	U	5	U	6	U	5	U	12	U

NAVSTA-SAN DIEGO
SITE 4 SOILS

		SAMPLE NUMBER:	NS4-BH7-S01-10		NS4-BH7-S02-15		NS4-BH8-S01-5		NS4-BH8-S02-10		NS4-BH8-S03-15	
		SAMPLING DATE:	01/28/91		01/28/91		01/28/91		01/28/91		01/28/91	
		BORING:	BH7		BH7		BH8		BH8		BH8	
		SITE:	NS4		NS4		NS4		NS4		NS4	
		DEPTH:	10		15		5		10		15	
COMPOUND NAME	UNITS	TEST CODE	RESULT	QUALIFIER	RESULT	QUALIFIER	RESULT	QUALIFIER	RESULT	QUALIFIER	RESULT	QUALIFIER
1,2,4-TRICHLOROBENZENE	UG/KG	BNA	520	U	470	U	390	U	620	U	490	U
1,2-DICHLOROBENZENE	UG/KG	BNA	520	U	470	U	390	U	620	U	490	U
1,3-DICHLOROBENZENE	UG/KG	BNA	520	U	470	U	390	U	620	U	490	U
1,4-DICHLOROBENZENE	UG/KG	BNA	520	U	470	U	390	U	620	U	490	U
2,4,5-TRICHLOROPHENOL	UG/KG	BNA	2500	U	2300	U	1900	U	3000	U	2400	U
2,4,6-TRICHLOROPHENOL	UG/KG	BNA	520	U	470	U	390	U	620	U	490	U
2,4-DICHLOROPHENOL	UG/KG	BNA	520	U	470	U	390	U	620	U	490	U
2,4-DIMETHYLPHENOL	UG/KG	BNA	520	U	470	U	390	U	620	U	490	U
2,4-DINITROPHENOL	UG/KG	BNA	2500	U	2300	U	1900	U	3000	U	2400	U
2,4-DINITROTOLUENE	UG/KG	BNA	520	U	470	U	390	U	620	U	490	U
2,6-DINITROTOLUENE	UG/KG	BNA	520	U	470	U	390	U	620	U	490	U
2-CHLORONAPHTHALENE	UG/KG	BNA	520	U	470	U	390	U	620	U	490	U
2-CHLOROPHENOL	UG/KG	BNA	520	U	470	U	390	U	620	U	490	U
2-METHYLNAPHTHALENE	UG/KG	BNA	520	U	470	U	390	U	620	U	490	U
2-METHYLPHENOL	UG/KG	BNA	520	U	470	U	390	U	620	U	490	U
2-NITROANILINE	UG/KG	BNA	2500	U	2300	U	1900	U	3000	U	2400	U
2-NITROPHENOL	UG/KG	BNA	520	U	470	U	390	U	620	U	490	U
3,3'-DICHLOROBENZIDINE	UG/KG	BNA	1000	U	940	U	780	U	1200	U	970	U
3-NITROANILINE	UG/KG	BNA	2500	U	2300	U	1900	U	3000	U	2400	U
4,6-DINITRO-2-METHYLPHENOL	UG/KG	BNA	2500	U	2300	U	1900	U	3000	U	2400	U
4-BROMOPHENYL-PHENYLETHER	UG/KG	BNA	520	U	470	U	390	U	620	U	490	U
4-CHLORO-3-METHYLPHENOL	UG/KG	BNA	520	U	470	U	390	U	620	U	490	U
4-CHLOROANILINE	UG/KG	BNA	520	U	470	U	390	U	620	U	490	U
4-CHLOROPHENYL-PHENYLETHER	UG/KG	BNA	520	U	470	U	390	U	620	U	490	U
4-METHYLPHENOL	UG/KG	BNA	520	U	470	U	390	U	620	U	490	U
4-NITROANILINE	UG/KG	BNA	2500	U	2300	U	1900	U	3000	U	2400	U
4-NITROPHENOL	UG/KG	BNA	2500	U	2300	U	1900	U	3000	U	2400	U
ACENAPHTHENE	UG/KG	BNA	520	U	470	U	390	U	620	U	490	U
ACENAPHTHYLENE	UG/KG	BNA	520	U	470	U	390	U	620	U	490	U
ANTHRACENE	UG/KG	BNA	520	U	470	U	390	U	620	U	490	U
BENZO(A)ANTHRACENE	UG/KG	BNA	520	U	470	U	390	U	620	U	490	U
BENZO(A)PYRENE	UG/KG	BNA	520	U	470	U	390	U	620	U	490	U
BENZO(B)FLUORANTHENE	UG/KG	BNA	520	U	470	U	390	U	620	U	490	U
BENZO(G,H,I)PERYLENE	UG/KG	BNA	520	U	470	U	390	U	620	U	490	U
BENZO(K)FLUORANTHENE	UG/KG	BNA	520	U	470	U	390	U	620	U	490	U
BENZOIC ACID	UG/KG	BNA	2500	U	2300	U	1900	U	3000	U	2400	U
BENZYL ALCOHOL	UG/KG	BNA	520	U	470	U	390	U	620	U	490	U
BIS(2-CHLOROETHOXY)METHANE	UG/KG	BNA	520	U	470	U	390	U	620	U	490	U
BIS(2-CHLOROETHYL)ETHER	UG/KG	BNA	520	U	470	U	390	U	620	U	490	U
BIS(2-CHLOROISOPROPYL)ETHER	UG/KG	BNA	520	U	470	U	390	U	620	U	490	U
BIS(2-ETHYLHEXYL)PHTHALATE	UG/KG	BNA	520	U	470	U	390	U	620	U	490	U
BUTYLBENZYLPHTHALATE	UG/KG	BNA	520	U	470	U	390	U	620	U	490	U
CHRYSENE	UG/KG	BNA	520	U	470	U	390	U	620	U	490	U
DI-N-BUTYLPHTHALATE	UG/KG	BNA	520	U	470	U	390	U	620	U	490	U
DI-N-OCTYLPHTHALATE	UG/KG	BNA	520	U	470	U	390	U	620	U	490	U
DIBENZ(A,H)ANTHRACENE	UG/KG	BNA	520	U	470	U	390	U	620	U	490	U
DIBENZOFURAN	UG/KG	BNA	520	U	470	U	390	U	620	U	490	U
DIETHYLPHTHALATE	UG/KG	BNA	520	U	470	U	390	U	620	U	490	U
DIMETHYLPHTHALATE	UG/KG	BNA	520	U	470	U	390	U	620	U	490	U
FLUORANTHENE	UG/KG	BNA	120	J	470	U	390	U	620	U	490	U
FLUORENE	UG/KG	BNA	520	U	470	U	390	U	620	U	490	U

NAVSTA-SAN DIEGO
SITE 4 SOILS

		SAMPLE NUMBER:	NS4-BH7-S01-10		NS4-BH7-S02-15		NS4-BH8-S01-5		NS4-BH8-S02-10		NS4-BH8-S03-15	
		SAMPLING DATE:	01/28/91		01/28/91		01/28/91		01/28/91		01/28/91	
		BORING:	BH7		BH7		BH8		BH8		BH8	
		SITE:	NS4		NS4		NS4		NS4		NS4	
		DEPTH:	10		15		5		10		15	
COMPOUND NAME	UNITS	TEST CODE	RESULT	QUALIFIER	RESULT	QUALIFIER	RESULT	QUALIFIER	RESULT	QUALIFIER	RESULT	QUALIFIER
HEXACHLOROBENZENE	UG/KG	BNA	520	U	470	U	390	U	620	U	490	U
HEXACHLOROBUTADIENE	UG/KG	BNA	520	U	470	U	390	U	620	U	490	U
HEXACHLOROCYCLOPENTADIENE	UG/KG	BNA	520	U	470	U	390	U	620	U	490	U
HEXACHLOROETHANE	UG/KG	BNA	520	U	470	U	390	U	620	U	490	U
INDENO(1,2,3-C,D)PYRENE	UG/KG	BNA	520	U	470	U	390	U	620	U	490	U
ISOPHORONE	UG/KG	BNA	520	U	470	U	390	U	620	U	490	U
N-NITROSO-DI-N-PROPYLAMINE	UG/KG	BNA	520	U	470	U	390	U	620	U	490	U
N-NITROSODIPHENYLAMINE (1)	UG/KG	BNA	520	U	470	U	390	U	620	U	490	U
NAPHTHALENE	UG/KG	BNA	520	U	470	U	390	U	620	U	490	U
NITROBENZENE	UG/KG	BNA	520	U	470	U	390	U	620	U	490	U
PENTACHLOROPHENOL	UG/KG	BNA	2500	U	2300	U	1900	U	3000	U	2400	U
PHENANTHRENE	UG/KG	BNA	520	U	470	U	390	U	620	U	490	U
PHENOL	UG/KG	BNA	520	U	470	U	390	U	620	U	490	U
PYRENE	UG/KG	BNA	100	J	470	U	390	U	620	U	490	U
ANTIMONY	MG/KG	CAC METALS	5.8	U	5.3	U	4.3	U	6.9	U	5.2	U
ARSENIC	MG/KG	CAC METALS	0.30	U	2.0	B	2.0	B	1.2	B	4.5	
BARIUM	MG/KG	CAC METALS	71.9		137		50.1		87.7		45.8	B
BERYLLIUM	MG/KG	CAC METALS	4.0		6.3		1.7		5.6		3.1	
CADMIUM	MG/KG	CAC METALS	1.2	U	1.1	U	0.91	U	1.4	U	1.1	U
CHROMIUM	MG/KG	CAC METALS	24.7		10.2		10.7		37.1		20.6	
COBALT	MG/KG	CAC METALS	9.6	B	4.8	B	4.2	B	14.0	B	7.6	B
COPPER	MG/KG	CAC METALS	23.6	U	190		4.8	U	187		56.2	U
LEAD	MG/KG	CAC METALS	7.4	U	2.3	U	6.0	U	4.0	U	4.9	U
MERCURY	MG/KG	CAC METALS	0.75		0.21	U	0.18	U	0.28	U	0.22	U
MOLYBDENUM	MG/KG	CAC METALS	2.7	B	5.6	B	1.6	U	5.9	B	2.4	B
NICKEL	MG/KG	CAC METALS	7.0	B	2.5	U	3.4	B	10.7	B	4.6	B
SELENIUM	MG/KG	CAC METALS	0.60	U	0.54	B	0.46	U	0.71	U	0.55	U
SILVER	MG/KG	CAC METALS	2.1	U	1.4	U	0.96	U	2.2	U	2.5	U
THALLIUM	MG/KG	CAC METALS	0.60	U	0.54	B	0.46	U	0.71	U	0.55	B
VANADIUM	MG/KG	CAC METALS	59.5		20.9		29.4		86.2		46.3	
ZINC	MG/KG	CAC METALS	66.8	U	145	U	25.9	U	83.7	U	39.7	U
ANTIMONY	UG/KG	CAC METALS										
ARSENIC	UG/KG	CAC METALS										
BARIUM	UG/KG	CAC METALS										
BERYLLIUM	UG/KG	CAC METALS										
CADMIUM	UG/KG	CAC METALS										
CHROMIUM	UG/KG	CAC METALS										
COBALT	UG/KG	CAC METALS										
COPPER	UG/KG	CAC METALS										
LEAD	UG/KG	CAC METALS										
MERCURY	UG/KG	CAC METALS										
MOLYBDENUM	UG/KG	CAC METALS										
NICKEL	UG/KG	CAC METALS										
SELENIUM	UG/KG	CAC METALS										
SILVER	UG/KG	CAC METALS										
THALLIUM	UG/KG	CAC METALS										
VANADIUM	UG/KG	CAC METALS										
ZINC	UG/KG	CAC METALS										
CAC WET EXTRACTION	DATE	CAC WET EX										
COPPER	MG/L	CAC WET EX										
LEAD	MG/L	CAC WET EX										

NAVSTA-SAN DIEGO
SITE 4 SOILS

		SAMPLE NUMBER:	NS4-BH7-S01-10		NS4-BH7-S02-15		NS4-BH8-S01-5		NS4-BH8-S02-10		NS4-BH8-S03-15	
		SAMPLING DATE:	01/28/91		01/28/91		01/28/91		01/28/91		01/28/91	
		BORING:	BH7		BH7		BH8		BH8		BH8	
		SITE:	NS4		NS4		NS4		NS4		NS4	
		DEPTH:	10		15		5		10		15	
COMPOUND NAME	UNITS	TEST CODE	RESULT	QUALIFIER	RESULT	QUALIFIER	RESULT	QUALIFIER	RESULT	QUALIFIER	RESULT	QUALIFIER
TOTAL CYANIDE	MG/KG	CN	1	UJ	1	UJ	1	U	1	U	1	U
TOTAL CYANIDE	MG/L	CN										
4,4'-DDD	UG/KG	PEST / PCB	25	U	23	U	19	U	30	U	24	U
4,4'-DDE	UG/KG	PEST / PCB	25	U	23	U	19	U	30	U	24	U
4,4'-DDT	UG/KG	PEST / PCB	25	U	23	U	19	U	30	U	24	U
ALDRIN	UG/KG	PEST / PCB	13	U	11	U	9.4	U	15	U	12	U
ALPHA-BHC	UG/KG	PEST / PCB	13	U	11	U	9.4	U	15	U	12	U
ALPHA-CHLORDANE	UG/KG	PEST / PCB	130	U	110	U	94	U	150	U	120	U
BETA-BHC	UG/KG	PEST / PCB	13	U	11	U	9.4	U	15	U	12	U
DELTA-BHC	UG/KG	PEST / PCB	13	U	11	U	9.4	U	15	U	12	U
DIBUTYL CHLORENDATE	UG/KG	PEST / PCB	44		39		95		59		49	
DIELDRIN	UG/KG	PEST / PCB	25	U	23	U	19	U	30	U	24	U
ENDOSULFAN I	UG/KG	PEST / PCB	13	U	11	U	9.4	U	15	U	12	U
ENDOSULFAN II	UG/KG	PEST / PCB	25	U	23	U	19	U	30	U	24	U
ENDOSULFAN SULFATE	UG/KG	PEST / PCB	25	U	23	U	19	U	30	U	24	U
ENDRIN	UG/KG	PEST / PCB	25	U	23	U	19	U	30	U	24	U
ENDRIN KETONE	UG/KG	PEST / PCB	25	U	23	U	19	U	30	U	24	U
GAMMA-BHC (LINDANE)	UG/KG	PEST / PCB	13	U	11	U	9.4	U	15	U	12	U
GAMMA-CHLORDANE	UG/KG	PEST / PCB	130	U	110	U	94	U	150	U	120	U
HEPTACHLOR	UG/KG	PEST / PCB	13	U	11	U	9.4	U	15	U	12	U
HEPTACHLOR EPOXIDE	UG/KG	PEST / PCB	13	U	11	U	9.4	U	15	U	12	U
METHOXYCHLOR	UG/KG	PEST / PCB	130	U	110	U	94	U	150	U	120	U
PCB-1016	UG/KG	PEST / PCB	130	U	110	U	94	U	150	U	120	U
PCB-1221	UG/KG	PEST / PCB	130	U	110	U	94	U	150	U	120	U
PCB-1232	UG/KG	PEST / PCB	130	U	110	U	94	U	150	U	120	U
PCB-1242	UG/KG	PEST / PCB	130	U	110	U	94	U	150	U	120	U
PCB-1248	UG/KG	PEST / PCB	130	U	110	U	94	U	150	U	120	U
PCB-1254	UG/KG	PEST / PCB	250	U	230	U	190	U	300	U	240	U
PCB-1260	UG/KG	PEST / PCB	250	U	230	U	190	U	300	U	240	U
TOXAPHENE	UG/KG	PEST / PCB	250	U	230	U	190	U	300	U	240	U
DIESEL	MG/KG	TPHC										
JP4	MG/KG	TPHC										
JP5	MG/KG	TPHC										
STODDARD	MG/KG	TPHC	10	U	10	U	10	U	10	U	10	U
DIESEL	UG/KG	TPHC										
JP4	UG/KG	TPHC										
JP5	UG/KG	TPHC										
STODDARD	UG/KG	TPHC										
1,1,1-TRICHLOROETHANE	UG/KG	VOA	8	U	7	U	6	U	9	U	7	U
1,1,2,2-TETRACHLOROETHANE	UG/KG	VOA	8	U	7	U	6	U	9	U	7	U
1,1,2-TRICHLOROETHANE	UG/KG	VOA	8	U	7	U	6	U	9	U	7	U
1,1-DICHLOROETHANE	UG/KG	VOA	8	U	7	U	6	U	9	U	7	U
1,1-DICHLOROETHENE	UG/KG	VOA	8	U	7	U	6	U	9	U	7	U
1,2-DICHLOROETHANE	UG/KG	VOA	8	U	7	U	6	U	9	U	7	U
1,2-DICHLOROETHENE (TOTAL)	UG/KG	VOA	8	U	7	U	6	U	9	U	7	U
1,2-DICHLOROPROPANE	UG/KG	VOA	8	U	7	U	6	U	9	U	7	U
2-BUTANONE	UG/KG	VOA	16	U	14	U	12	U	10	J	15	U
2-HEXANONE	UG/KG	VOA	16	U	14	U	12	U	19	U	15	U
4-METHYL-2-PENTANONE	UG/KG	VOA	16	U	14	U	12	U	19	U	15	U
ACETONE	UG/KG	VOA	47	U	41	U	18	U	47	U	15	U
BENZENE	UG/KG	VOA	8	U	7	U	6	U	9	U	7	U

NAVSTA-SAN DIEGO
SITE 4 SOILS

		SAMPLE NUMBER:	NS4-BH7-S01-10		NS4-BH7-S02-15		NS4-BH8-S01-5		NS4-BH8-S02-10		NS4-BH8-S03-15	
		SAMPLING DATE:	01/28/91		01/28/91		01/28/91		01/28/91		01/28/91	
		BORING:	BH7		BH7		BH8		BH8		BH8	
		SITE:	NS4		NS4		NS4		NS4		NS4	
		DEPTH:	10		15		5		10		15	
COMPOUND NAME	UNITS	TEST CODE	RESULT	QUALIFIER	RESULT	QUALIFIER	RESULT	QUALIFIER	RESULT	QUALIFIER	RESULT	QUALIFIER
BROMODICHLOROMETHANE	UG/KG	VOA	8	U	7	U	6	U	9	U	7	U
BROMOFORM	UG/KG	VOA	8	U	7	U	6	U	9	U	7	U
BROMOMETHANE	UG/KG	VOA	16	U	14	U	12	U	19	U	15	U
CARBON DISULFIDE	UG/KG	VOA	24		17		6	U	57		45	
CARBON TETRACHLORIDE	UG/KG	VOA	8	U	7	U	6	U	9	U	7	U
CHLOROBENZENE	UG/KG	VOA	8	U	7	U	6	U	9	U	7	U
CHLOROETHANE	UG/KG	VOA	16	U	14	U	12	U	19	U	15	U
CHLOROFORM	UG/KG	VOA	8	U	7	U	6	U	9	U	7	U
CHLOROMETHANE	UG/KG	VOA	16	U	14	U	12	U	19	U	15	U
CIS-1,3-DICHLOROPROPENE	UG/KG	VOA	8	U	7	U	6	U	9	U	7	U
DIBROMOCHLOROMETHANE	UG/KG	VOA	8	U	7	U	6	U	9	U	7	U
ETHYLBENZENE	UG/KG	VOA	8	U	7	U	6	U	9	U	7	U
METHYLENE CHLORIDE	UG/KG	VOA	50	U	40	U	10	U	10	U	11	U
STYRENE	UG/KG	VOA	8	U	7	U	6	U	9	U	7	U
TETRACHLOROETHENE	UG/KG	VOA	8	U	7	U	6	U	9	U	7	U
TOLUENE	UG/KG	VOA	8	U	7	U	6	U	9	U	7	U
TRANS-1,3-DICHLOROPROPENE	UG/KG	VOA	8	U	7	U	6	U	9	U	7	U
TRICHLOROETHENE	UG/KG	VOA	8	U	7	U	6	U	9	U	7	U
VINYL ACETATE	UG/KG	VOA	16	U	14	U	12	U	19	U	15	U
VINYL CHLORIDE	UG/KG	VOA	16	U	14	U	12	U	19	U	15	U
XYLENES (TOTAL)	UG/KG	VOA	8	U	7	U	6	U	9	U	7	U

NAVSTA-SAN DIEGO
SITE 4 SOILS

		SAMPLE NUMBER:	NS4-ER-1-28-91		NS4-ER-1-29-91		NS4-ER-2-11-91		NS4-FB-1-29-91		NS4-FB-1/25/91	
		SAMPLING DATE:	01/28/91		01/29/91		02/11/91		01/29/91		01/25/91	
		BORING:	ER		ER		ER		FB		FB	
		SITE:	NS4		NS4		NS4		NS4		NS4	
		DEPTH:	28-91		29-91		11-91		29-91		NS4-FB-1/25/91	
COMPOUND NAME	UNITS	TEST CODE	RESULT	QUALIFIER	RESULT	QUALIFIER	RESULT	QUALIFIER	RESULT	QUALIFIER	RESULT	QUALIFIER
1,2,4-TRICHLOROBENZENE	UG/KG	BNA	10	U	10	U	10	U	10	U	10	U
1,2-DICHLOROBENZENE	UG/KG	BNA	10	U	10	U	10	U	10	U	10	U
1,3-DICHLOROBENZENE	UG/KG	BNA	10	U	10	U	10	U	10	U	10	U
1,4-DICHLOROBENZENE	UG/KG	BNA	10	U	10	U	10	U	10	U	10	U
2,4,5-TRICHLOROPHENOL	UG/KG	BNA	50	U	50	U	50	U	50	U	50	U
2,4,6-TRICHLOROPHENOL	UG/KG	BNA	10	U	10	U	10	U	10	U	10	U
2,4-DICHLOROPHENOL	UG/KG	BNA	10	U	10	U	10	U	10	U	10	U
2,4-DIMETHYLPHENOL	UG/KG	BNA	10	U	10	U	10	U	10	U	10	U
2,4-DINITROPHENOL	UG/KG	BNA	50	U	50	U	50	U	50	U	50	U
2,4-DINITROTOLUENE	UG/KG	BNA	10	U	10	U	10	U	10	U	10	U
2,6-DINITROTOLUENE	UG/KG	BNA	10	U	10	U	10	U	10	U	10	U
2-CHLORONAPHTHALENE	UG/KG	BNA	10	U	10	U	10	U	10	U	10	U
2-CHLOROPHENOL	UG/KG	BNA	10	U	10	U	10	U	10	U	10	U
2-METHYLNAPHTHALENE	UG/KG	BNA	10	U	10	U	10	U	10	U	10	U
2-METHYLPHENOL	UG/KG	BNA	10	U	10	U	10	U	10	U	10	U
2-NITROANILINE	UG/KG	BNA	50	U	50	U	50	U	50	U	50	U
2-NITROPHENOL	UG/KG	BNA	10	U	10	U	10	U	10	U	10	U
3,3'-DICHLOROBENZIDINE	UG/KG	BNA	20	U	20	U	20	U	20	U	20	U
3-NITROANILINE	UG/KG	BNA	50	U	50	U	50	U	50	U	50	U
4,6-DINITRO-2-METHYLPHENOL	UG/KG	BNA	50	U	50	U	50	U	50	U	50	U
4-BROMOPHENYL-PHENYLETHER	UG/KG	BNA	10	U	10	U	10	U	10	U	10	U
4-CHLORO-3-METHYLPHENOL	UG/KG	BNA	10	U	10	U	10	U	10	U	10	U
4-CHLOROANILINE	UG/KG	BNA	10	U	10	U	10	U	10	U	10	U
4-CHLOROPHENYL-PHENYLETHER	UG/KG	BNA	10	U	10	U	10	U	10	U	10	U
4-METHYLPHENOL	UG/KG	BNA	10	U	10	U	10	U	10	U	10	U
4-NITROANILINE	UG/KG	BNA	50	U	50	U	50	U	50	U	50	U
4-NITROPHENOL	UG/KG	BNA	50	U	50	U	50	U	50	U	50	U
ACENAPHTHENE	UG/KG	BNA	10	U	10	U	10	U	10	U	10	U
ACENAPHTHYLENE	UG/KG	BNA	10	U	10	U	10	U	10	U	10	U
ANTHRACENE	UG/KG	BNA	10	U	10	U	10	U	10	U	10	U
BENZO(A)ANTHRACENE	UG/KG	BNA	10	U	10	U	10	U	10	U	10	U
BENZO(A)PYRENE	UG/KG	BNA	10	U	10	U	10	U	10	U	10	U
BENZO(B)FLUORANTHENE	UG/KG	BNA	10	U	10	U	10	U	10	U	10	U
BENZO(G,H,I)PERYLENE	UG/KG	BNA	10	U	10	U	10	U	10	U	10	U
BENZO(K)FLUORANTHENE	UG/KG	BNA	10	U	10	U	10	U	10	U	10	U
BENZOIC ACID	UG/KG	BNA	50	U	50	U	50	U	50	U	50	U
BENZYL ALCOHOL	UG/KG	BNA	10	U	2	J	10	U	10	U	10	U
BIS(2-CHLOROETHOXY)METHANE	UG/KG	BNA	10	U	10	U	10	U	10	U	10	U
BIS(2-CHLOROETHYL)ETHER	UG/KG	BNA	10	U	10	U	10	U	10	U	10	U
BIS(2-CHLOROISOPROPYL)ETHER	UG/KG	BNA	10	U	10	U	10	U	10	U	10	U
BIS(2-ETHYLHEXYL)PHTHALATE	UG/KG	BNA	10	U	10	U	10	U	10	U	10	U
BUTYLBENZYLPHTHALATE	UG/KG	BNA	10	U	10	U	10	U	10	U	10	U
CHRYSENE	UG/KG	BNA	10	U	10	U	10	U	10	U	10	U
DI-N-BUTYLPHTHALATE	UG/KG	BNA	10	U	10	U	10	U	10	U	10	U
DI-N-OCTYLPHTHALATE	UG/KG	BNA	10	U	10	U	10	U	10	U	10	U
DIBENZ(A,H)ANTHRACENE	UG/KG	BNA	10	U	10	U	10	U	10	U	10	U
DIBENZOFURAN	UG/KG	BNA	10	U	10	U	10	U	10	U	10	U
DIETHYLPHTHALATE	UG/KG	BNA	10	U	10	U	10	U	10	U	10	U
DIMETHYLPHTHALATE	UG/KG	BNA	10	U	10	U	10	U	10	U	10	U
FLUORANTHENE	UG/KG	BNA	10	U	10	U	10	U	10	U	10	U
FLUORENE	UG/KG	BNA	10	U	10	U	10	U	10	U	10	U

NAVSTA-SAN DIEGO
SITE 4 SOILS

		SAMPLE NUMBER:	NS4-ER-1-28-91		NS4-ER-1-29-91		NS4-ER-2-11-91		NS4-FB-1-29-91		NS4-FB-1/25/91	
		SAMPLING DATE:	01/28/91		01/29/91		02/11/91		01/29/91		01/25/91	
		BORING:	ER		ER		ER		FB		FB	
		SITE:	NS4		NS4		NS4		NS4		NS4	
		DEPTH:	28-91		29-91		11-91		29-91		NS4-FB-1/25/91	
COMPOUND NAME	UNITS	TEST CODE	RESULT	QUALIFIER	RESULT	QUALIFIER	RESULT	QUALIFIER	RESULT	QUALIFIER	RESULT	QUALIFIER
HEXACHLOROBENZENE	UG/KG	BNA	10	U	10	U	10	U	10	U	10	U
HEXACHLOROBUTADIENE	UG/KG	BNA	10	U	10	U	10	U	10	U	10	U
HEXACHLOROCYCLOPENTADIENE	UG/KG	BNA	10	U	10	U	10	U	10	U	10	U
HEXACHLOROETHANE	UG/KG	BNA	10	U	10	U	10	U	10	U	10	U
INDENO(1,2,3-C,D)PYRENE	UG/KG	BNA	10	U	10	U	10	U	10	U	10	U
ISOPHORONE	UG/KG	BNA	10	U	10	U	10	U	10	U	10	U
N-NITROSO-DI-N-PROPYLAMINE	UG/KG	BNA	10	U	10	U	10	U	10	U	10	U
N-NITROSODIPHENYLAMINE (1)	UG/KG	BNA	10	U	10	U	10	U	10	U	10	U
NAPHTHALENE	UG/KG	BNA	10	U	10	U	10	U	10	U	10	U
NITROBENZENE	UG/KG	BNA	10	U	10	U	10	U	10	U	10	U
PENTACHLOROPHENOL	UG/KG	BNA	50	U	50	U	50	U	50	U	50	U
PHENANTHRENE	UG/KG	BNA	10	U	10	U	10	U	10	U	10	U
PHENOL	UG/KG	BNA	10	U	10	U	3	J	10	U	43	
PYRENE	UG/KG	BNA	10	U	10	U	10	U	10	U	10	U
ANTIMONY	MG/KG	CAC METALS										
ARSENIC	MG/KG	CAC METALS										
BARIUM	MG/KG	CAC METALS										
BERYLLIUM	MG/KG	CAC METALS										
CADMIUM	MG/KG	CAC METALS										
CHROMIUM	MG/KG	CAC METALS										
COBALT	MG/KG	CAC METALS										
COPPER	MG/KG	CAC METALS										
LEAD	MG/KG	CAC METALS										
MERCURY	MG/KG	CAC METALS										
MOLYBDENUM	MG/KG	CAC METALS										
NICKEL	MG/KG	CAC METALS										
SELENIUM	MG/KG	CAC METALS										
SILVER	MG/KG	CAC METALS										
THALLIUM	MG/KG	CAC METALS										
VANADIUM	MG/KG	CAC METALS										
ZINC	MG/KG	CAC METALS										
ANTIMONY	UG/KG	CAC METALS	19.0	U	19.0	U	19.0	U	19.0	U	19.0	U
ARSENIC	UG/KG	CAC METALS	1.0	U	1.0	U	2.0	U	1.0	U	1.0	U
BARIUM	UG/KG	CAC METALS	8.6	B	8.1	B	12.9	B	5.9	B	10.1	B
BERYLLIUM	UG/KG	CAC METALS	1.0	U	1.0	U	1.0	U	1.0	U	1.0	U
CADMIUM	UG/KG	CAC METALS	4.0	U	4.0	U	4.0	U	4.0	U	4.0	U
CHROMIUM	UG/KG	CAC METALS	4.0	U	4.0	U	4.0	U	4.0	U	4.0	U
COBALT	UG/KG	CAC METALS	5.0	U	5.0	U	5.0	U	5.0	U	5.0	U
COPPER	UG/KG	CAC METALS	25.1		37.4		10.2	B	75.6		56.2	
LEAD	UG/KG	CAC METALS	2.1	B	7.7		4.1		9.7		7.0	
MERCURY	UG/KG	CAC METALS	0.20	U	0.20	U	0.20	U	0.20	U	0.20	U
MOLYBDENUM	UG/KG	CAC METALS	7.0	U	7.0	U	7.0	U	7.0	U	7.0	U
NICKEL	UG/KG	CAC METALS	9.0	U	9.0	U	9.0	U	16.6	B	9.0	U
SELENIUM	UG/KG	CAC METALS	2.0	U	2.0	U	1.0	U	2.0	U	2.0	U
SILVER	UG/KG	CAC METALS	5.3	B	6.2	B	3.0	U	4.3	B	4.8	B
THALLIUM	UG/KG	CAC METALS	1.0	U	2.0	U	1.2	B	2.0	U	1.0	U
VANADIUM	UG/KG	CAC METALS	4.2	B	4.2	B	18.0	B	3.6	B	3.6	B
ZINC	UG/KG	CAC METALS	717		497		159		1150		407	
CAC WET EXTRACTION	DATE	CAC WET EX										
COPPER	MG/L	CAC WET EX										
LEAD	MG/L	CAC WET EX										

NAVSTA-SAN DIEGO
SITE 4 SOILS

		SAMPLE NUMBER:	NS4-ER-1-28-91		NS4-ER-1-29-91		NS4-ER-2-11-91		NS4-FB-1-29-91		NS4-FB-1/25/91	
		SAMPLING DATE:	01/28/91		01/29/91		02/11/91		01/29/91		01/25/91	
		BORING:	ER		ER		ER		FB		FB	
		SITE:	NS4		NS4		NS4		NS4		NS4	
		DEPTH:	28-91		29-91		11-91		29-91		NS4-FB-1/25/91	
COMPOUND NAME	UNITS	TEST CODE	RESULT	QUALIFIER	RESULT	QUALIFIER	RESULT	QUALIFIER	RESULT	QUALIFIER	RESULT	QUALIFIER
TOTAL CYANIDE	MG/KG	CN										
TOTAL CYANIDE	MG/L	CN	0.02	UJ	0.02	U			0.02	U	0.02	U
4,4'-DDD	UG/KG	PEST / PCB	0.1	U	0.1	U	0.1	U	0.1	U	0.1	U
4,4'-DDE	UG/KG	PEST / PCB	0.1	U	0.1	U	0.1	U	0.1	U	0.1	U
4,4'-DDT	UG/KG	PEST / PCB	0.1	U	0.1	U	0.1	U	0.1	U	0.1	U
ALDRIN	UG/KG	PEST / PCB	0.05	U	0.05	U	0.05	U	0.05	U	0.05	U
ALPHA-BHC	UG/KG	PEST / PCB	0.05	U	0.05	U	0.05	U	0.05	U	0.05	U
ALPHA-CHLORDANE	UG/KG	PEST / PCB	0.5	U	0.5	U	0.5	U	0.5	U	0.5	U
BETA-BHC	UG/KG	PEST / PCB	0.05	U	0.05	U	0.05	U	0.05	U	0.05	U
DELTA-BHC	UG/KG	PEST / PCB	0.05	U	0.05	U	0.05	U	0.05	U	0.05	U
DIBUTYL CHLORENDATE	UG/KG	PEST / PCB	88		84		79		86		66	
DIELDRIN	UG/KG	PEST / PCB	0.1	U	0.1	U	0.1	U	0.1	U	0.1	U
ENDOSULFAN I	UG/KG	PEST / PCB	0.05	U	0.05	U	0.05	U	0.05	U	0.05	U
ENDOSULFAN II	UG/KG	PEST / PCB	0.1	U	0.1	U	0.1	U	0.1	U	0.1	U
ENDOSULFAN SULFATE	UG/KG	PEST / PCB	0.1	U	0.1	U	0.1	U	0.1	U	0.1	U
ENDRIN	UG/KG	PEST / PCB	0.1	U	0.1	U	0.1	U	0.1	U	0.1	U
ENDRIN KETONE	UG/KG	PEST / PCB	0.1	U	0.1	U	0.1	U	0.1	U	0.1	U
GAMMA-BHC (LINDANE)	UG/KG	PEST / PCB	0.05	U	0.05	U	0.05	U	0.05	U	0.05	U
GAMMA-CHLORDANE	UG/KG	PEST / PCB	0.5	U	0.5	U	0.5	U	0.5	U	0.5	U
HEPTACHLOR	UG/KG	PEST / PCB	0.05	U	0.05	U	0.05	U	0.05	U	0.05	U
HEPTACHLOR EPOXIDE	UG/KG	PEST / PCB	0.05	U	0.05	U	0.05	U	0.05	U	0.05	U
METHOXYCHLOR	UG/KG	PEST / PCB	0.5	U	0.5	U	0.5	U	0.5	U	0.5	U
PCB-1016	UG/KG	PEST / PCB	0.5	U	0.5	U	0.5	U	0.5	U	0.5	U
PCB-1221	UG/KG	PEST / PCB	0.5	U	0.5	U	0.5	U	0.5	U	0.5	U
PCB-1232	UG/KG	PEST / PCB	0.5	U	0.5	U	0.5	U	0.5	U	0.5	U
PCB-1242	UG/KG	PEST / PCB	0.5	U	0.5	U	0.5	U	0.5	U	0.5	U
PCB-1248	UG/KG	PEST / PCB	0.5	U	0.5	U	0.5	U	0.5	U	0.5	U
PCB-1254	UG/KG	PEST / PCB	1	U	1	U	1	U	1	U	1	U
PCB-1260	UG/KG	PEST / PCB	1	U	1	U	1	U	1	U	1	U
TOXAPHENE	UG/KG	PEST / PCB	1	U	1	U	1	U	1	U	1	U
DIESEL	MG/KG	TPHC										
JP4	MG/KG	TPHC										
JP5	MG/KG	TPHC										
STODDARD	MG/KG	TPHC										
DIESEL	UG/KG	TPHC									250	U
JP4	UG/KG	TPHC									270	
JP5	UG/KG	TPHC									250	U
STODDARD	UG/KG	TPHC	250	U	250	U	250	U	250	U		
1,1,1-TRICHLOROETHANE	UG/KG	VOA	5	U	5	U	5	U	5	U	5	U
1,1,2,2-TETRACHLOROETHANE	UG/KG	VOA	5	U	5	U	5	U	5	U	5	U
1,1,2-TRICHLOROETHANE	UG/KG	VOA	5	U	5	U	5	U	5	U	5	U
1,1-DICHLOROETHANE	UG/KG	VOA	5	U	5	U	5	U	5	U	5	U
1,1-DICHLOROETHENE	UG/KG	VOA	5	U	5	U	5	U	5	U	5	U
1,2-DICHLOROETHANE	UG/KG	VOA	5	U	2	J	5	U	5	U	5	U
1,2-DICHLOROETHENE (TOTAL)	UG/KG	VOA	5	U	5	U	5	U	5	U	5	U
1,2-DICHLOROPROPANE	UG/KG	VOA	5	U	5	U	5	U	5	U	5	U
2-BUTANONE	UG/KG	VOA	10	U	10	U	10	U	10	U	10	U
2-HEXANONE	UG/KG	VOA	10	U	10	U	10	U	10	U	10	U
4-METHYL-2-PENTANONE	UG/KG	VOA	10	U	10	U	10	U	10	U	10	U
ACETONE	UG/KG	VOA	11	B	10	U	11	B	10	U	14	
BENZENE	UG/KG	VOA	5	U	5	U	5	U	5	U	5	U

NAVSTA-SAN DIEGO
SITE 4 SOILS

		SAMPLE NUMBER:	NS4-ER-1-28-91		NS4-ER-1-29-91		NS4-ER-2-11-91		NS4-FB-1-29-91		NS4-FB-1/25/91	
		SAMPLING DATE:	01/28/91		01/29/91		02/11/91		01/29/91		01/25/91	
		BORING:	ER		ER		ER		FB		FB	
		SITE:	NS4		NS4		NS4		NS4		NS4	
		DEPTH:	28-91		29-91		11-91		29-91		NS4-FB-1/25/91	
COMPOUND NAME	UNITS	TEST CODE	RESULT	QUALIFIER	RESULT	QUALIFIER	RESULT	QUALIFIER	RESULT	QUALIFIER	RESULT	QUALIFIER
BROMODICHLOROMETHANE	UG/KG	VOA	10		8		8		11		15	
BROMOFORM	UG/KG	VOA	2	J	3	J	3	J	4	J	3	J
BROMOMETHANE	UG/KG	VOA	10	U	10	U	10	U	10	U	10	U
CARBON DISULFIDE	UG/KG	VOA	5	U	5	U	5	U	5	U	5	U
CARBON TETRACHLORIDE	UG/KG	VOA	5	U	5	U	5	U	5	U	5	U
CHLOROBENZENE	UG/KG	VOA	5	U	5	U	5	U	5	U	5	U
CHLOROETHANE	UG/KG	VOA	10	U	10	U	10	U	10	U	10	U
CHLOROFORM	UG/KG	VOA	8		5		6		8		14	
CHLOROMETHANE	UG/KG	VOA	10	U	10	U	10	U	10	U	10	U
CIS-1,3-DICHLOROPROPENE	UG/KG	VOA	5	U	5	U	5	U	5	U	5	U
DIBROMOCHLOROMETHANE	UG/KG	VOA	8		10		9		13		12	
ETHYLBENZENE	UG/KG	VOA	5	U	5	U	5	U	5	U	5	U
METHYLENE CHLORIDE	UG/KG	VOA	5	B	5	B	2	BJ	5	B	4	BJ
STYRENE	UG/KG	VOA	5	U	5	U	5	U	5	U	5	U
TETRACHLOROETHENE	UG/KG	VOA	5	U	3	J	5	U	5	U	5	U
TOLUENE	UG/KG	VOA	5	U	5	U	5	U	5	U	5	U
TRANS-1,3-DICHLOROPROPENE	UG/KG	VOA	5	U	5	U	5	U	5	U	5	U
TRICHLOROETHENE	UG/KG	VOA	5	U	1	J	5	U	5	U	5	U
VINYL ACETATE	UG/KG	VOA	10	U	10	U	10	U	10	U	10	U
VINYL CHLORIDE	UG/KG	VOA	10	U	10	U	10	U	10	U	10	U
XYLENES (TOTAL)	UG/KG	VOA	5	U	5	U	5	U	5	U	5	U

NAVSTA-SAN DIEGO
SITE 4 SOILS

		SAMPLE NUMBER:	NS4-FB-2-12-91		NS4-MW1-S01-10		NS4-MW1-S02-15		NS4-MW2-S01-5		NS4-MW2-S02-10	
		SAMPLING DATE:	02/12/91		01/29/91		01/29/91		01/28/91		01/28/91	
		BORING:	FB		MW1		MW1		MW2		MW2	
		SITE:	NS4		NS4		NS4		NS4		NS4	
		DEPTH:	12-91		10		15		5		10	
COMPOUND NAME	UNITS	TEST CODE	RESULT	QUALIFIER	RESULT	QUALIFIER	RESULT	QUALIFIER	RESULT	QUALIFIER	RESULT	QUALIFIER
1,2,4-TRICHLOROBENZENE	UG/KG	BNA	10	U	410	U	370	U	340	U	360	U
1,2-DICHLOROBENZENE	UG/KG	BNA	10	U	410	U	370	U	340	U	360	U
1,3-DICHLOROBENZENE	UG/KG	BNA	10	U	410	U	370	U	340	U	360	U
1,4-DICHLOROBENZENE	UG/KG	BNA	10	U	410	U	370	U	340	U	360	U
2,4,5-TRICHLOROPHENOL	UG/KG	BNA	50	U	2000	U	1800	U	1600	U	1700	U
2,4,6-TRICHLOROPHENOL	UG/KG	BNA	10	U	410	U	370	U	340	U	360	U
2,4-DICHLOROPHENOL	UG/KG	BNA	10	U	410	U	370	U	340	U	360	U
2,4-DIMETHYLPHENOL	UG/KG	BNA	10	U	410	U	370	U	340	U	360	U
2,4-DINITROPHENOL	UG/KG	BNA	50	U	2000	U	1800	U	1600	U	1700	U
2,4-DINITROTOLUENE	UG/KG	BNA	10	U	410	U	370	U	340	U	360	U
2,6-DINITROTOLUENE	UG/KG	BNA	10	U	410	U	370	U	340	U	360	U
2-CHLORONAPHTHALENE	UG/KG	BNA	10	U	410	U	370	U	340	U	360	U
2-CHLOROPHENOL	UG/KG	BNA	10	U	410	U	370	U	340	U	360	U
2-METHYLNAPHTHALENE	UG/KG	BNA	10	U	410	U	370	U	340	U	360	U
2-METHYLPHENOL	UG/KG	BNA	10	U	410	U	370	U	340	U	360	U
2-NITROANILINE	UG/KG	BNA	50	U	2000	U	1800	U	1600	U	1700	U
2-NITROPHENOL	UG/KG	BNA	10	U	410	U	370	U	340	U	360	U
3,3'-DICHLOROBENZIDINE	UG/KG	BNA	20	U	820	U	750	U	670	U	720	U
3-NITROANILINE	UG/KG	BNA	50	U	2000	U	1800	U	1600	U	1700	U
4,6-DINITRO-2-METHYLPHENOL	UG/KG	BNA	50	U	2000	U	1800	U	1600	U	1700	U
4-BROMOPHENYL-PHENYLETHER	UG/KG	BNA	10	U	410	U	370	U	340	U	360	U
4-CHLORO-3-METHYLPHENOL	UG/KG	BNA	10	U	410	U	370	U	340	U	360	U
4-CHLOROANILINE	UG/KG	BNA	10	U	410	U	370	U	340	U	360	U
4-CHLOROPHENYL-PHENYLETHER	UG/KG	BNA	10	U	410	U	370	U	340	U	360	U
4-METHYLPHENOL	UG/KG	BNA	10	U	410	U	370	U	340	U	360	U
4-NITROANILINE	UG/KG	BNA	50	U	2000	U	1800	U	1600	U	1700	U
4-NITROPHENOL	UG/KG	BNA	50	U	2000	U	1800	U	1600	U	1700	U
ACENAPHTHENE	UG/KG	BNA	10	U	410	U	370	U	340	U	360	U
ACENAPHTHYLENE	UG/KG	BNA	10	U	410	U	370	U	340	U	360	U
ANTHRACENE	UG/KG	BNA	10	U	410	U	370	U	340	U	360	U
BENZO(A)ANTHRACENE	UG/KG	BNA	10	U	410	U	370	U	340	U	360	U
BENZO(A)PYRENE	UG/KG	BNA	10	U	410	U	370	U	340	U	360	U
BENZO(B)FLUORANTHENE	UG/KG	BNA	10	U	410	U	370	U	340	U	360	U
BENZO(G,H,I)PERYLENE	UG/KG	BNA	10	U	410	U	370	U	340	U	360	U
BENZO(K)FLUORANTHENE	UG/KG	BNA	10	U	410	U	370	U	340	U	360	U
BENZOIC ACID	UG/KG	BNA	50	U	2000	U	1800	U	1600	U	1700	U
BENZYL ALCOHOL	UG/KG	BNA	10	U	410	U	370	U	340	U	360	U
BIS(2-CHLOROETHOXY)METHANE	UG/KG	BNA	10	U	410	U	370	U	340	U	360	U
BIS(2-CHLOROETHYL)ETHER	UG/KG	BNA	10	U	410	U	370	U	340	U	360	U
BIS(2-CHLOROISOPROPYL)ETHER	UG/KG	BNA	10	U	410	U	370	U	340	U	360	U
BIS(2-ETHYLHEXYL)PHTHALATE	UG/KG	BNA	10	U	410	U	370	U	340	U	360	U
BUTYLBENZYLPHTHALATE	UG/KG	BNA	10	U	410	U	370	U	340	U	360	U
CHRYSENE	UG/KG	BNA	10	U	410	U	370	U	340	U	360	U
DI-N-BUTYLPHTHALATE	UG/KG	BNA	10	U	410	U	370	U	340	U	360	U
DI-N-OCTYLPHTHALATE	UG/KG	BNA	10	U	410	U	370	U	340	U	360	U
DIBENZ(A,H)ANTHRACENE	UG/KG	BNA	10	U	410	U	370	U	340	U	360	U
DIBENZOFURAN	UG/KG	BNA	10	U	410	U	370	U	340	U	360	U
DIETHYLPHTHALATE	UG/KG	BNA	10	U	410	U	370	U	340	U	360	U
DIMETHYLPHTHALATE	UG/KG	BNA	10	U	410	U	370	U	340	U	360	U
FLUORANTHENE	UG/KG	BNA	10	U	410	U	370	U	340	U	360	U
FLUORENE	UG/KG	BNA	10	U	410	U	370	U	340	U	360	U

NAVSTA-SAN DIEGO
SITE 4 SOILS

		SAMPLE NUMBER:	NS4-FB-2-12-91		NS4-MW1-S01-10		NS4-MW1-S02-15		NS4-MW2-S01-5		NS4-MW2-S02-10	
		SAMPLING DATE:	02/12/91		01/29/91		01/29/91		01/28/91		01/28/91	
		BORING:	FB		MW1		MW1		MW2		MW2	
		SITE:	NS4		NS4		NS4		NS4		NS4	
		DEPTH:	12-91		10		15		5		10	
COMPOUND NAME	UNITS	TEST CODE	RESULT	QUALIFIER	RESULT	QUALIFIER	RESULT	QUALIFIER	RESULT	QUALIFIER	RESULT	QUALIFIER
HEXACHLOROBENZENE	UG/KG	BNA	10	U	410	U	370	U	340	U	360	U
HEXACHLOROBUTADIENE	UG/KG	BNA	10	U	410	U	370	U	340	U	360	U
HEXACHLOROCYCLOPENTADIENE	UG/KG	BNA	10	U	410	U	370	U	340	U	360	U
HEXACHLOROETHANE	UG/KG	BNA	10	U	410	U	370	U	340	U	360	U
INDENO(1,2,3-C,D)PYRENE	UG/KG	BNA	10	U	410	U	370	U	340	U	360	U
ISOPHORONE	UG/KG	BNA	10	U	410	U	370	U	340	U	360	U
N-NITROSO-DI-N-PROPYLAMINE	UG/KG	BNA	10	U	410	U	370	U	340	U	360	U
N-NITROSODIPHENYLAMINE (1)	UG/KG	BNA	10	U	410	U	370	U	340	U	360	U
NAPHTHALENE	UG/KG	BNA	10	U	410	U	370	U	340	U	360	U
NITROBENZENE	UG/KG	BNA	10	U	410	U	370	U	340	U	360	U
PENTACHLOROPHENOL	UG/KG	BNA	50	U	2000	U	1800	U	1600	U	1700	U
PHENANTHRENE	UG/KG	BNA	10	U	410	U	370	U	340	U	360	U
PHENOL	UG/KG	BNA	10	U	410	U	370	U	340	U	360	U
PYRENE	UG/KG	BNA	10	U	410	U	370	U	340	U	360	U
ANTIMONY	MG/KG	CAC METALS			4.3	U	4.0	U	3.7	U	3.9	U
ARSENIC	MG/KG	CAC METALS			1.8	B	0.33	U	1.4	B	1.6	B
BARIUM	MG/KG	CAC METALS			14.4	B	24.8	B	26.8	B	7.9	U
BERYLLIUM	MG/KG	CAC METALS			0.86	B	1.7		0.67	B	0.33	B
CADMIUM	MG/KG	CAC METALS			0.91	U	0.85	U	0.79	U	0.81	U
CHROMIUM	MG/KG	CAC METALS			6.6		10.5		4.3		2.4	
COBALT	MG/KG	CAC METALS			2.0	B	4.8	B	2.2	B	1.0	U
COPPER	MG/KG	CAC METALS			4.8	U	5.2	U	22.4	U	11.5	U
LEAD	MG/KG	CAC METALS			2.7	U	3.9	U	19.3		1.0	U
MERCURY	MG/KG	CAC METALS			0.18	U	0.25		0.31		0.16	U
MOLYBDENUM	MG/KG	CAC METALS			1.6	U	2.2	B	1.9	B	1.4	U
NICKEL	MG/KG	CAC METALS			2.1	U	2.1	U	2.2	B	1.8	U
SELENIUM	MG/KG	CAC METALS			0.65	B	0.44	U	0.39	U	0.42	U
SILVER	MG/KG	CAC METALS			0.89	U	0.94	U	1.0	U	0.61	U
THALLIUM	MG/KG	CAC METALS			0.45	U	0.44	B	0.39	U	0.42	U
VANADIUM	MG/KG	CAC METALS			17.5		32.7		16.6		5.0	B
ZINC	MG/KG	CAC METALS			14.6	U	21.2	U	33.3	U	5.9	U
ANTIMONY	UG/KG	CAC METALS	19.0	U								
ARSENIC	UG/KG	CAC METALS	2.0	U								
BARIUM	UG/KG	CAC METALS	14.2	B								
BERYLLIUM	UG/KG	CAC METALS	1.0	U								
CADMIUM	UG/KG	CAC METALS	4.0	U								
CHROMIUM	UG/KG	CAC METALS	4.0	U								
COBALT	UG/KG	CAC METALS	5.0	U								
COPPER	UG/KG	CAC METALS	30.7									
LEAD	UG/KG	CAC METALS	1.7	B								
MERCURY	UG/KG	CAC METALS	0.20	U								
MOLYBDENUM	UG/KG	CAC METALS	7.0	U								
NICKEL	UG/KG	CAC METALS	9.0	U								
SELENIUM	UG/KG	CAC METALS	1.0	U								
SILVER	UG/KG	CAC METALS	3.0	U								
THALLIUM	UG/KG	CAC METALS	1.0	U								
VANADIUM	UG/KG	CAC METALS	16.7	B								
ZINC	UG/KG	CAC METALS	166									
CAC WET EXTRACTION	DATE	CAC WET EX										
COPPER	MG/L	CAC WET EX										
LEAD	MG/L	CAC WET EX										

NAVSTA-SAN DIEGO
SITE 4 SOILS

		SAMPLE NUMBER:	NS4-FB-2-12-91		NS4-MW1-S01-10		NS4-MW1-S02-15		NS4-MW2-S01-5		NS4-MW2-S02-10	
		SAMPLING DATE:	02/12/91		01/29/91		01/29/91		01/28/91		01/28/91	
		BORING:	FB		MW1		MW1		MW2		MW2	
		SITE:	NS4		NS4		NS4		NS4		NS4	
		DEPTH:	12-91		10		15		5		10	
COMPOUND NAME	UNITS	TEST CODE	RESULT	QUALIFIER	RESULT	QUALIFIER	RESULT	QUALIFIER	RESULT	QUALIFIER	RESULT	QUALIFIER
TOTAL CYANIDE	MG/KG	CN			1	U	1	U	1	U	1	U
TOTAL CYANIDE	MG/L	CN										
4,4'-DDD	UG/KG	PEST / PCB	0.1	U	20	U	18	U	16	U	17	U
4,4'-DDE	UG/KG	PEST / PCB	0.1	U	20	U	18	U	16	U	17	U
4,4'-DDT	UG/KG	PEST / PCB	0.1	U	20	U	18	U	16	U	17	U
ALDRIN	UG/KG	PEST / PCB	0.05	U	9.9	U	9.1	U	8.2	U	8.7	U
ALPHA-BHC	UG/KG	PEST / PCB	0.05	U	9.9	U	9.1	U	8.2	U	8.7	U
ALPHA-CHLORDANE	UG/KG	PEST / PCB	0.5	U	99	U	91	U	82	U	87	U
BETA-BHC	UG/KG	PEST / PCB	0.05	U	9.9	U	9.1	U	8.2	U	8.7	U
DELTA-BHC	UG/KG	PEST / PCB	0.05	U	9.9	U	9.1	U	8.2	U	8.7	U
DIBUTYL CHLORENDATE	UG/KG	PEST / PCB	46		77		79		101		90	
DIELDRIN	UG/KG	PEST / PCB	0.1	U	20	U	18	U	16	U	17	U
ENDOSULFAN I	UG/KG	PEST / PCB	0.05	U	9.9	U	9.1	U	8.2	U	8.7	U
ENDOSULFAN II	UG/KG	PEST / PCB	0.1	U	20	U	18	U	16	U	17	U
ENDOSULFAN SULFATE	UG/KG	PEST / PCB	0.1	U	20	U	18	U	16	U	17	U
ENDRIN	UG/KG	PEST / PCB	0.1	U	20	U	18	U	16	U	17	U
ENDRIN KETONE	UG/KG	PEST / PCB	0.1	U	20	U	18	U	16	U	17	U
GAMMA-BHC (LINDANE)	UG/KG	PEST / PCB	0.05	U	9.9	U	9.1	U	8.2	U	8.7	U
GAMMA-CHLORDANE	UG/KG	PEST / PCB	0.5	U	99	U	91	U	82	U	87	U
HEPTACHLOR	UG/KG	PEST / PCB	0.05	U	9.9	U	9.1	U	8.2	U	8.7	U
HEPTACHLOR EPOXIDE	UG/KG	PEST / PCB	0.05	U	9.9	U	9.1	U	8.2	U	8.7	U
METHOXYCHLOR	UG/KG	PEST / PCB	0.5	U	99	U	91	U	82	U	87	U
PCB-1016	UG/KG	PEST / PCB	0.5	U	99	U	91	U	82	U	87	U
PCB-1221	UG/KG	PEST / PCB	0.5	U	99	U	91	U	82	U	87	U
PCB-1232	UG/KG	PEST / PCB	0.5	U	99	U	91	U	82	U	87	U
PCB-1242	UG/KG	PEST / PCB	0.5	U	99	U	91	U	82	U	87	U
PCB-1248	UG/KG	PEST / PCB	0.5	U	99	U	91	U	82	U	87	U
PCB-1254	UG/KG	PEST / PCB	1	U	200	U	180	U	160	U	170	U
PCB-1260	UG/KG	PEST / PCB	1	U	200	U	180	U	160	U	170	U
TOXAPHENE	UG/KG	PEST / PCB	1	U	200	U	180	U	160	U	170	U
DIESEL	MG/KG	TPHC										
JP4	MG/KG	TPHC										
JP5	MG/KG	TPHC										
STODDARD	MG/KG	TPHC			10	U	10	U	10	U	10	U
DIESEL	UG/KG	TPHC										
JP4	UG/KG	TPHC										
JP5	UG/KG	TPHC										
STODDARD	UG/KG	TPHC	250	U								
1,1,1-TRICHLOROETHANE	UG/KG	VOA	5	U	6	U	6	U	5	U	5	U
1,1,2,2-TETRACHLOROETHANE	UG/KG	VOA	5	U	6	U	6	U	5	U	5	U
1,1,2-TRICHLOROETHANE	UG/KG	VOA	5	U	6	U	6	U	5	U	5	U
1,1-DICHLOROETHANE	UG/KG	VOA	5	U	6	U	6	U	5	U	5	U
1,1-DICHLOROETHENE	UG/KG	VOA	5	U	6	U	6	U	5	U	5	U
1,2-DICHLOROETHANE	UG/KG	VOA	5	U	6	U	6	U	5	U	5	U
1,2-DICHLOROETHENE (TOTAL)	UG/KG	VOA	5	U	6	U	6	U	5	U	5	U
1,2-DICHLOROPROPANE	UG/KG	VOA	5	U	6	U	6	U	5	U	5	U
2-BUTANONE	UG/KG	VOA	10	U	12	U	11	U	10	U	11	U
2-HEXANONE	UG/KG	VOA	10	U	12	U	11	U	10	U	11	U
4-METHYL-2-PENTANONE	UG/KG	VOA	10	U	12	U	11	U	10	U	11	U
ACETONE	UG/KG	VOA	10	U	20	U	11	J	11	U	11	U
BENZENE	*UG/KG*	*VOA*	5	U	6	U	6	U	5	U	5	U

NAVSTA-SAN DIEGO
SITE 4 SOILS

		SAMPLE NUMBER:	NS4-FB-2-12-91		NS4-MW1-S01-10		NS4-MW1-S02-15		NS4-MW2-S01-5		NS4-MW2-S02-10	
		SAMPLING DATE:	02/12/91		01/29/91		01/29/91		01/28/91		01/28/91	
		BORING:	FB		MW1		MW1		MW2		MW2	
		SITE:	NS4		NS4		NS4		NS4		NS4	
		DEPTH:	12-91		10		15		5		10	
COMPOUND NAME	UNITS	TEST CODE	RESULT	QUALIFIER	RESULT	QUALIFIER	RESULT	QUALIFIER	RESULT	QUALIFIER	RESULT	QUALIFIER
BROMODICHLOROMETHANE	UG/KG	VOA	18		6	U	6	U	5	U	5	U
BROMOFORM	UG/KG	VOA	4	J	6	U	6	U	5	U	5	U
BROMOMETHANE	UG/KG	VOA	10	U	12	U	11	U	10	U	11	U
CARBON DISULFIDE	UG/KG	VOA	5	U	6	U	6	U	5	U	5	U
CARBON TETRACHLORIDE	UG/KG	VOA	5	U	6	U	6	U	5	U	5	U
CHLOROBENZENE	UG/KG	VOA	5	U	6	U	6	U	5	U	5	U
CHLOROETHANE	UG/KG	VOA	10	U	12	U	11	U	10	U	11	U
CHLOROFORM	UG/KG	VOA	16		6	U	6	U	5	U	5	U
CHLOROMETHANE	UG/KG	VOA	10	U	12	U	11	U	10	U	11	U
CIS-1,3-DICHLOROPROPENE	UG/KG	VOA	5	U	6	U	6	U	5	U	5	U
DIBROMOCHLOROMETHANE	UG/KG	VOA	16		6	U	6	U	5	U	5	U
ETHYLBENZENE	UG/KG	VOA	5	U	6	U	6	U	5	U	5	U
METHYLENE CHLORIDE	UG/KG	VOA	2	BJ	8	U	8	U	25	U	14	U
STYRENE	UG/KG	VOA	5	U	6	U	6	U	5	U	5	U
TETRACHLOROETHENE	UG/KG	VOA	5	U	6	U	6	U	5	U	5	U
TOLUENE	UG/KG	VOA	5	U	6	U	6	U	3	J	5	U
TRANS-1,3-DICHLOROPROPENE	UG/KG	VOA	5	U	6	U	6	U	5	U	5	U
TRICHLOROETHENE	UG/KG	VOA	5	U	6	U	6	U	5	U	5	U
VINYL ACETATE	UG/KG	VOA	10	U	12	U	11	U	10	U	11	U
VINYL CHLORIDE	UG/KG	VOA	10	U	12	U	11	U	10	U	11	U
XYLENES (TOTAL)	UG/KG	VOA	5	U	6	U	6	U	3	J	5	U

NAVSTA-SAN DIEGO
SITE 4 SOILS

		SAMPLE NUMBER:	NS4-MW2-S03-15		NS4-MW3-S01-5		NS4-MW3-S02-10		NS4-MW3-S02-10-FD		NS4-MW3-S02-15	
		SAMPLING DATE:	01/28/91		01/28/91		01/28/91		01/28/91		01/28/91	
		BORING:	MW2		MW3		MW3		MW3		MW3	
		SITE:	NS4		NS4		NS4		NS4		NS4	
		DEPTH:	15		5		10		10-FD		15	
COMPOUND NAME	UNITS	TEST CODE	RESULT	QUALIFIER	RESULT	QUALIFIER	RESULT	QUALIFIER	RESULT	QUALIFIER	RESULT	QUALIFIER
1,2,4-TRICHLOROBENZENE	UG/KG	BNA	470	U	7200	U	400	U	400	U		
1,2-DICHLOROBENZENE	UG/KG	BNA	470	U	7200	U	400	U	400	U		
1,3-DICHLOROBENZENE	UG/KG	BNA	470	U	7200	U	400	U	400	U		
1,4-DICHLOROBENZENE	UG/KG	BNA	470	U	7200	U	400	U	400	U		
2,4,5-TRICHLOROPHENOL	UG/KG	BNA	2300	U	35000	U	1900	U	1900	U		
2,4,6-TRICHLOROPHENOL	UG/KG	BNA	470	U	7200	U	400	U	400	U		
2,4-DICHLOROPHENOL	UG/KG	BNA	470	U	7200	U	400	U	400	U		
2,4-DIMETHYLPHENOL	UG/KG	BNA	470	U	7200	U	400	U	400	U		
2,4-DINITROPHENOL	UG/KG	BNA	2300	U	35000	U	1900	U	1900	U		
2,4-DINITROTOLUENE	UG/KG	BNA	470	U	7200	U	400	U	400	U		
2,6-DINITROTOLUENE	UG/KG	BNA	470	U	7200	U	400	U	400	U		
2-CHLORONAPHTHALENE	UG/KG	BNA	470	U	7200	U	400	U	400	U		
2-CHLOROPHENOL	UG/KG	BNA	470	U	7200	U	400	U	400	U		
2-METHYLNAPHTHALENE	UG/KG	BNA	470	U	7200	U	400	U	400	U		
2-METHYLPHENOL	UG/KG	BNA	470	U	7200	U	400	U	400	U		
2-NITROANILINE	UG/KG	BNA	2300	U	35000	U	1900	U	1900	U		
2-NITROPHENOL	UG/KG	BNA	470	U	7200	U	400	U	400	U		
3,3'-DICHLOROBENZIDINE	UG/KG	BNA	940	U	14000	U	800	U	800	U		
3-NITROANILINE	UG/KG	BNA	2300	U	35000	U	1900	U	1900	U		
4,6-DINITRO-2-METHYLPHENOL	UG/KG	BNA	2300	U	35000	U	1900	U	1900	U		
4-BROMOPHENYL-PHENYLETHER	UG/KG	BNA	470	U	7200	U	400	U	400	U		
4-CHLORO-3-METHYLPHENOL	UG/KG	BNA	470	U	7200	U	400	U	400	U		
4-CHLOROANILINE	UG/KG	BNA	470	U	7200	U	400	U	400	U		
4-CHLOROPHENYL-PHENYLETHER	UG/KG	BNA	470	U	7200	U	400	U	400	U		
4-METHYLPHENOL	UG/KG	BNA	470	U	7200	U	400	U	400	U		
4-NITROANILINE	UG/KG	BNA	2300	U	35000	U	1900	U	1900	U		
4-NITROPHENOL	UG/KG	BNA	2300	U	35000	U	1900	U	1900	U		
ACENAPHTHENE	UG/KG	BNA	470	U	7200	U	400	U	400	U		
ACENAPHTHYLENE	UG/KG	BNA	470	U	7200	U	400	U	400	U		
ANTHRACENE	UG/KG	BNA	470	U	7200	U	400	U	400	U		
BENZO(A)ANTHRACENE	UG/KG	BNA	470	U	7200	U	400	U	400	U		
BENZO(A)PYRENE	UG/KG	BNA	470	U	7200	U	400	U	400	U		
BENZO(B)FLUORANTHENE	UG/KG	BNA	470	U	7200	U	400	U	400	U		
BENZO(G,H,I)PERYLENE	UG/KG	BNA	470	U	7200	U	400	U	400	U		
BENZO(K)FLUORANTHENE	UG/KG	BNA	470	U	7200	U	400	U	400	U		
BENZOIC ACID	UG/KG	BNA	2300	U	35000	U	1900	U	1900	U		
BENZYL ALCOHOL	UG/KG	BNA	470	U	7200	U	400	U	400	U		
BIS(2-CHLOROETHOXY)METHANE	UG/KG	BNA	470	U	7200	U	400	U	400	U		
BIS(2-CHLOROETHYL)ETHER	UG/KG	BNA	470	U	7200	U	400	U	400	U		
BIS(2-CHLOROISOPROPYL)ETHER	UG/KG	BNA	470	U	7200	U	400	U	400	U		
BIS(2-ETHYLHEXYL)PHTHALATE	UG/KG	BNA	470	U	7200	U	400	U	400	U		
BUTYLBENZYLPHTHALATE	UG/KG	BNA	470	U	7200	U	400	U	400	U		
CHRYSENE	UG/KG	BNA	470	U	7200	U	400	U	400	U		
DI-N-BUTYLPHTHALATE	UG/KG	BNA	470	U	7200	U	400	U	400	U		
DI-N-OCTYLPHTHALATE	UG/KG	BNA	470	U	7200	U	400	U	400	U		
DIBENZ(A,H)ANTHRACENE	UG/KG	BNA	470	U	7200	U	400	U	400	U		
DIBENZOFURAN	UG/KG	BNA	470	U	7200	U	400	U	400	U		
DIETHYLPHTHALATE	UG/KG	BNA	470	U	91000		400	U	400	U		
DIMETHYLPHTHALATE	UG/KG	BNA	470	U	7200	U	400	U	400	U		
FLUORANTHENE	UG/KG	BNA	470	U	7200	U	400	U	400	U		
FLUORENE	UG/KG	BNA	470	U	7200	U	400	U	400	U		

NAVSTA-SAN DIEGO
SITE 4 SOILS

		SAMPLE NUMBER:	NS4-MW2-S03-15		NS4-MW3-S01-5		NS4-MW3-S02-10		NS4-MW3-S02-10-FD		NS4-MW3-S02-15	
		SAMPLING DATE:	01/28/91		01/28/91		01/28/91		01/28/91		01/28/91	
		BORING:	MW2		MW3		MW3		MW3		MW3	
		SITE:	NS4		NS4		NS4		NS4		NS4	
		DEPTH:	15		5		10		10-FD		15	
COMPOUND NAME	UNITS	TEST CODE	RESULT	QUALIFIER	RESULT	QUALIFIER	RESULT	QUALIFIER	RESULT	QUALIFIER	RESULT	QUALIFIER
HEXACHLOROBENZENE	UG/KG	BNA	470	U	7200	U	400	U	400	U		
HEXACHLOROBUTADIENE	UG/KG	BNA	470	U	7200	U	400	U	400	U		
HEXACHLOROCYCLOPENTADIENE	UG/KG	BNA	470	U	7200	U	400	U	400	U		
HEXACHLOROETHANE	UG/KG	BNA	470	U	7200	U	400	U	400	U		
INDENO(1,2,3-C,D)PYRENE	UG/KG	BNA	470	U	7200	U	400	U	400	U		
ISOPHORONE	UG/KG	BNA	470	U	7200	U	400	U	400	U		
N-NITROSO-DI-N-PROPYLAMINE	UG/KG	BNA	470	U	7200	U	400	U	400	U		
N-NITROSODIPHENYLAMINE (1)	UG/KG	BNA	470	U	7200	U	400	U	400	U		
NAPHTHALENE	UG/KG	BNA	470	U	7200	U	400	U	400	U		
NITROBENZENE	UG/KG	BNA	470	U	7200	U	400	U	400	U		
PENTACHLOROPHENOL	UG/KG	BNA	2300	U	35000	U	1900	U	1900	U		
PHENANTHRENE	UG/KG	BNA	470	U	7200	U	400	U	400	U		
PHENOL	UG/KG	BNA	470	U	7200	U	400	U	400	U		
PYRENE	UG/KG	BNA	470	U	7200	U	400	U	400	U		
ANTIMONY	MG/KG	CAC METALS	5.0	U	3.9	UJ	4.6	U	4.2	U		
ARSENIC	MG/KG	CAC METALS	2.2	B	0.86	BJ	16.6		1.8	B		
BARIUM	MG/KG	CAC METALS	45.2	B	52.3		76.0		16.1	B		
BERYLLIUM	MG/KG	CAC METALS	2.7		2.0		2.0		0.68	B		
CADMIUM	MG/KG	CAC METALS	1.1	U	0.82	U	0.96	U	0.89	U		
CHROMIUM	MG/KG	CAC METALS	15.9		9.9		4.2		4.2			
COBALT	MG/KG	CAC METALS	5.4	B	5.4	B	6.2	B	1.1	U		
COPPER	MG/KG	CAC METALS	19.2	U	37.0	U	136		9.6	U		
LEAD	MG/KG	CAC METALS	3.2	U	131		1250		20.7			
MERCURY	MG/KG	CAC METALS	0.21	U	0.16		0.78		0.18	U		
MOLYBDENUM	MG/KG	CAC METALS	2.2	B	1.4	U	2.4	B	1.6	U		
NICKEL	MG/KG	CAC METALS	3.3	B	5.6	B	2.2	U	2.0	U		
SELENIUM	MG/KG	CAC METALS	0.55	U	0.41	U	0.46	U	0.47	B		
SILVER	MG/KG	CAC METALS	1.7	U	1.4	U	1.8	U	1.1	U		
THALLIUM	MG/KG	CAC METALS	0.55	U	0.41	U	0.46	U	0.47	U		
VANADIUM	MG/KG	CAC METALS	35.9		40.1		16.8		12.6			
ZINC	MG/KG	CAC METALS	32.6	U	58.9	U	166	U	16.2	U		
ANTIMONY	UG/KG	CAC METALS										
ARSENIC	UG/KG	CAC METALS										
BARIUM	UG/KG	CAC METALS										
BERYLLIUM	UG/KG	CAC METALS										
CADMIUM	UG/KG	CAC METALS										
CHROMIUM	UG/KG	CAC METALS										
COBALT	UG/KG	CAC METALS										
COPPER	UG/KG	CAC METALS										
LEAD	UG/KG	CAC METALS										
MERCURY	UG/KG	CAC METALS										
MOLYBDENUM	UG/KG	CAC METALS										
NICKEL	UG/KG	CAC METALS										
SELENIUM	UG/KG	CAC METALS										
SILVER	UG/KG	CAC METALS										
THALLIUM	UG/KG	CAC METALS										
VANADIUM	UG/KG	CAC METALS										
ZINC	UG/KG	CAC METALS										
CAC WET EXTRACTION	DATE	CAC WET EX										
COPPER	MG/L	CAC WET EX										
LEAD	MG/L	CAC WET EX					5.9				31	

NAVSTA-SAN DIEGO
SITE 4 SOILS

		SAMPLE NUMBER:	NS4-MW2-S03-15		NS4-MW3-S01-5		NS4-MW3-S02-10		NS4-MW3-S02-10-FD		NS4-MW3-S02-15	
		SAMPLING DATE:	01/28/91		01/28/91		01/28/91		01/28/91		01/28/91	
		BORING:	MW2		MW3		MW3		MW3		MW3	
		SITE:	NS4		NS4		NS4		NS4		NS4	
		DEPTH:	15		5		10		10-FD		15	
COMPOUND NAME	UNITS	TEST CODE	RESULT	QUALIFIER	RESULT	QUALIFIER	RESULT	QUALIFIER	RESULT	QUALIFIER	RESULT	QUALIFIER
TOTAL CYANIDE	MG/KG	CN	1	U	1	U	1	U	1	U		
TOTAL CYANIDE	MG/L	CN										
4,4'-DDD	UG/KG	PEST / PCB	23	U	35	UJ	19	U	19	U		
4,4'-DDE	UG/KG	PEST / PCB	23	U	25	J	19	U	19	U		
4,4'-DDT	UG/KG	PEST / PCB	23	U	71	J	19	U	19	U		
ALDRIN	UG/KG	PEST / PCB	11	U	17	UJ	9.6	U	9.6	U		
ALPHA-BHC	UG/KG	PEST / PCB	11	U	17	UJ	9.6	U	9.6	U		
ALPHA-CHLORDANE	UG/KG	PEST / PCB	110	U	170	UJ	96	U	96	U		
BETA-BHC	UG/KG	PEST / PCB	11	U	17	UJ	9.6	U	9.6	U		
DELTA-BHC	UG/KG	PEST / PCB	11	U	17	UJ	9.6	U	9.6	U		
DIBUTYL CHLORENDATE	UG/KG	PEST / PCB	45		107		36		106			
DIELDRIN	UG/KG	PEST / PCB	23	U	35	UJ	19	U	19	U		
ENDOSULFAN I	UG/KG	PEST / PCB	11	U	17	UJ	9.6	U	9.6	U		
ENDOSULFAN II	UG/KG	PEST / PCB	23	U	35	UJ	19	U	19	U		
ENDOSULFAN SULFATE	UG/KG	PEST / PCB	23	U	35	UJ	19	U	19	U		
ENDRIN	UG/KG	PEST / PCB	23	U	35	UJ	19	U	19	U		
ENDRIN KETONE	UG/KG	PEST / PCB	23	U	35	UJ	19	U	19	U		
GAMMA-BHC (LINDANE)	UG/KG	PEST / PCB	11	U	17	UJ	9.6	U	9.6	U		
GAMMA-CHLORDANE	UG/KG	PEST / PCB	110	U	170	UJ	96	U	96	U		
HEPTACHLOR	UG/KG	PEST / PCB	11	U	17	UJ	9.6	U	9.6	U		
HEPTACHLOR EPOXIDE	UG/KG	PEST / PCB	11	U	17	UJ	9.6	U	9.6	U		
METHOXYCHLOR	UG/KG	PEST / PCB	110	U	170	UJ	96	U	96	U		
PCB-1016	UG/KG	PEST / PCB	110	U	170	UJ	96	U	96	U		
PCB-1221	UG/KG	PEST / PCB	110	U	170	UJ	96	U	96	U		
PCB-1232	UG/KG	PEST / PCB	110	U	170	UJ	96	U	96	U		
PCB-1242	UG/KG	PEST / PCB	110	U	170	UJ	96	U	96	U		
PCB-1248	UG/KG	PEST / PCB	110	U	170	UJ	96	U	96	U		
PCB-1254	UG/KG	PEST / PCB	230	U	350	UJ	190	U	190	U		
PCB-1260	UG/KG	PEST / PCB	230	U	350	UJ	190	U	190	U		
TOXAPHENE	UG/KG	PEST / PCB	230	U	350	UJ	190	U	190	U		
DIESEL	MG/KG	TPHC										
JP4	MG/KG	TPHC										
JP5	MG/KG	TPHC										
STODDARD	MG/KG	TPHC	10	U	50	U	10	U	10	U		
DIESEL	UG/KG	TPHC										
JP4	UG/KG	TPHC										
JP5	UG/KG	TPHC										
STODDARD	UG/KG	TPHC										
1,1,1-TRICHLOROETHANE	UG/KG	VOA	7	U	5	U	6	U	6	U		
1,1,2,2-TETRACHLOROETHANE	UG/KG	VOA	7	U	5	U	6	U	6	U		
1,1,2-TRICHLOROETHANE	UG/KG	VOA	7	U	5	U	6	U	6	U		
1,1-DICHLOROETHANE	UG/KG	VOA	7	U	5	U	6	U	6	U		
1,1-DICHLOROETHENE	UG/KG	VOA	7	U	5	U	6	U	6	U		
1,2-DICHLOROETHANE	UG/KG	VOA	7	U	5	U	6	U	6	U		
1,2-DICHLOROETHENE (TOTAL)	UG/KG	VOA	7	U	5	U	6	U	6	U		
1,2-DICHLOROPROPANE	UG/KG	VOA	7	U	5	U	6	U	6	U		
2-BUTANONE	UG/KG	VOA	14	U	11	U	12	U	12	U		
2-HEXANONE	UG/KG	VOA	14	U	11	U	12	U	12	U		
4-METHYL-2-PENTANONE	UG/KG	VOA	14	U	11	U	12	U	12	U		
ACETONE	UG/KG	VOA	45	U	13	U	20	U	23	U		
BENZENE	UG/KG	VOA	7	U	5	U	6	U	6	U		

NAVSTA-SAN DIEGO
SITE 4 SOILS

		SAMPLE NUMBER:	NS4-MW2-S03-15		NS4-MW3-S01-5		NS4-MW3-S02-10		NS4-MW3-S02-10-FD		NS4-MW3-S02-15	
		SAMPLING DATE:	01/28/91		01/28/91		01/28/91		01/28/91		01/28/91	
		BORING:	MW2		MW3		MW3		MW3		MW3	
		SITE:	NS4		NS4		NS4		NS4		NS4	
		DEPTH:	15		5		10		10-FD		15	
COMPOUND NAME	UNITS	TEST CODE	RESULT	QUALIFIER	RESULT	QUALIFIER	RESULT	QUALIFIER	RESULT	QUALIFIER	RESULT	QUALIFIER
BROMODICHLOROMETHANE	UG/KG	VOA	7	U	5	U	6	U	6	U		
BROMOFORM	UG/KG	VOA	7	U	5	U	6	U	6	U		
BROMOMETHANE	UG/KG	VOA	14	U	11	U	12	U	12	U		
CARBON DISULFIDE	UG/KG	VOA	55		5	U	1	J	6	U		
CARBON TETRACHLORIDE	UG/KG	VOA	7	U	5	U	6	U	6	U		
CHLOROBENZENE	UG/KG	VOA	7	U	5	U	6	U	6	U		
CHLOROETHANE	UG/KG	VOA	14	U	11	U	12	U	12	U		
CHLOROFORM	UG/KG	VOA	7	U	5	U	6	U	6	U		
CHLOROMETHANE	UG/KG	VOA	14	U	11	U	12	U	12	U		
CIS-1,3-DICHLOROPROPENE	UG/KG	VOA	7	U	5	U	6	U	6	U		
DIBROMOCHLOROMETHANE	UG/KG	VOA	7	U	5	U	6	U	6	U		
ETHYLBENZENE	UG/KG	VOA	7	U	5	U	6	U	6	U		
METHYLENE CHLORIDE	UG/KG	VOA	11	U	27	U	12	U	12	U		
STYRENE	UG/KG	VOA	7	U	5	U	6	U	6	U		
TETRACHLOROETHENE	UG/KG	VOA	7	U	5	U	6	U	6	U		
TOLUENE	UG/KG	VOA	7	U	5	U	6	U	6	U		
TRANS-1,3-DICHLOROPROPENE	UG/KG	VOA	7	U	5	U	6	U	6	U		
TRICHLOROETHENE	UG/KG	VOA	7	U	5	U	6	U	6	U		
VINYL ACETATE	UG/KG	VOA	14	U	11	U	12	U	12	U		
VINYL CHLORIDE	UG/KG	VOA	14	U	11	U	12	U	12	U		
XYLENES (TOTAL)	UG/KG	VOA	7	U	5	U	6	U	6	U		

NAVSTA-SAN DIEGO
SITE 4 SOILS

		SAMPLE NUMBER:	NS4-MW4-S01-5		NS4-MW4-S02-10		NS4-MW4-S03-15		NS4-MW4-S04-20		NS4-SS1-S01	
		SAMPLING DATE:	01/29/91		01/29/91		01/29/91		01/29/91		02/12/91	
		BORING:	MW4		MW4		MW4		MW4		SS1	
		SITE:	NS4		NS4		NS4		NS4		NS4	
		DEPTH:	5		10		15		20		NS4-SS1-S01	
COMPOUND NAME	UNITS	TEST CODE	RESULT	QUALIFIER	RESULT	QUALIFIER	RESULT	QUALIFIER	RESULT	QUALIFIER	RESULT	QUALIFIER
1,2,4-TRICHLOROBENZENE	UG/KG	BNA	380	U	400	U	400	U	390	U	440	U
1,2-DICHLOROBENZENE	UG/KG	BNA	380	U	400	U	400	U	390	U	440	U
1,3-DICHLOROBENZENE	UG/KG	BNA	380	U	400	U	400	U	390	U	440	U
1,4-DICHLOROBENZENE	UG/KG	BNA	380	U	400	U	400	U	390	U	440	U
2,4,5-TRICHLOROPHENOL	UG/KG	BNA	1900	U	2000	U	2000	U	1900	U	2100	U
2,4,6-TRICHLOROPHENOL	UG/KG	BNA	380	U	400	U	400	U	390	U	440	U
2,4-DICHLOROPHENOL	UG/KG	BNA	380	U	400	U	400	U	390	U	440	U
2,4-DIMETHYLPHENOL	UG/KG	BNA	380	U	400	U	400	U	390	U	440	U
2,4-DINITROPHENOL	UG/KG	BNA	1900	U	2000	U	2000	U	1900	U	2100	U
2,4-DINITROTOLUENE	UG/KG	BNA	380	U	400	U	400	U	390	U	440	U
2,6-DINITROTOLUENE	UG/KG	BNA	380	U	400	U	400	U	390	U	440	U
2-CHLORONAPHTHALENE	UG/KG	BNA	380	U	400	U	400	U	390	U	440	U
2-CHLOROPHENOL	UG/KG	BNA	380	U	400	U	400	U	390	U	440	U
2-METHYLNAPHTHALENE	UG/KG	BNA	380	U	400	U	400	U	390	U	440	U
2-METHYLPHENOL	UG/KG	BNA	380	U	400	U	400	U	390	U	440	U
2-NITROANILINE	UG/KG	BNA	1900	U	2000	U	2000	U	1900	U	2100	U
2-NITROPHENOL	UG/KG	BNA	380	U	400	U	400	U	390	U	440	U
3,3'-DICHLOROBENZIDINE	UG/KG	BNA	770	U	810	U	810	U	790	U	880	U
3-NITROANILINE	UG/KG	BNA	1900	U	2000	U	2000	U	1900	U	2100	U
4,6-DINITRO-2-METHYLPHENOL	UG/KG	BNA	1900	U	2000	U	2000	U	1900	U	2100	U
4-BROMOPHENYL-PHENYLETHER	UG/KG	BNA	380	U	400	U	400	U	390	U	440	U
4-CHLORO-3-METHYLPHENOL	UG/KG	BNA	380	U	400	U	400	U	390	U	440	U
4-CHLOROANILINE	UG/KG	BNA	380	U	400	U	400	U	390	U	440	U
4-CHLOROPHENYL-PHENYLETHER	UG/KG	BNA	380	U	400	U	400	U	390	U	440	U
4-METHYLPHENOL	UG/KG	BNA	380	U	400	U	400	U	390	U	440	U
4-NITROANILINE	UG/KG	BNA	1900	U	2000	U	2000	U	1900	U	2100	U
4-NITROPHENOL	UG/KG	BNA	1900	U	2000	U	2000	U	1900	U	2100	U
ACENAPHTHENE	UG/KG	BNA	380	U	400	U	400	U	390	U	440	U
ACENAPHTHYLENE	UG/KG	BNA	380	U	400	U	400	U	390	U	80	J
ANTHRACENE	UG/KG	BNA	380	U	400	U	400	U	390	U	51	J
BENZO(A)ANTHRACENE	UG/KG	BNA	380	U	400	U	400	U	390	U	220	J
BENZO(A)PYRENE	UG/KG	BNA	380	U	400	U	400	U	390	U	310	J
BENZO(B)FLUORANTHENE	UG/KG	BNA	380	U	400	U	400	U	390	U	360	J
BENZO(G,H,I)PERYLENE	UG/KG	BNA	380	U	400	U	400	U	390	U	380	J
BENZO(K)FLUORANTHENE	UG/KG	BNA	380	U	400	U	400	U	390	U	450	
BENZOIC ACID	UG/KG	BNA	1900	U	2000	U	2000	U	1900	U	93	J
BENZYL ALCOHOL	UG/KG	BNA	380	U	400	U	400	U	390	U	440	U
BIS(2-CHLOROETHOXY)METHANE	UG/KG	BNA	380	U	400	U	400	U	390	U	440	U
BIS(2-CHLOROETHYL)ETHER	UG/KG	BNA	380	U	400	U	400	U	390	U	440	U
BIS(2-CHLOROISOPROPYL)ETHER	UG/KG	BNA	380	U	400	U	400	U	390	U	440	U
BIS(2-ETHYLHEXYL)PHTHALATE	UG/KG	BNA	380	U	400	U	400	U	390	U	420	J
BUTYLBENZYLPHTHALATE	UG/KG	BNA	380	U	400	U	400	U	390	U	440	U
CHRYSENE	UG/KG	BNA	380	U	400	U	400	U	390	U	460	
DI-N-BUTYLPHTHALATE	UG/KG	BNA	380	U	400	U	400	U	390	U	440	U
DI-N-OCTYLPHTHALATE	UG/KG	BNA	380	U	400	U	400	U	390	U	440	U
DIBENZ(A,H)ANTHRACENE	UG/KG	BNA	380	U	400	U	400	U	390	U	91	J
DIBENZOFURAN	UG/KG	BNA	380	U	400	U	400	U	390	U	440	U
DIETHYLPHTHALATE	UG/KG	BNA	380	U	400	U	400	U	390	U	440	U
DIMETHYLPHTHALATE	UG/KG	BNA	380	U	400	U	400	U	390	U	440	U
FLUORANTHENE	UG/KG	BNA	380	U	400	U	400	U	390	U	400	J
FLUORENE	UG/KG	BNA	380	U	400	U	400	U	390	U	440	U

NAVSTA-SAN DIEGO
SITE 4 SOILS

		SAMPLE NUMBER:	NS4-MW4-S01-5		NS4-MW4-S02-10		NS4-MW4-S03-15		NS4-MW4-S04-20		NS4-SS1-S01	
		SAMPLING DATE:	01/29/91		01/29/91		01/29/91		01/29/91		02/12/91	
		BORING:	MW4		MW4		MW4		MW4		SS1	
		SITE:	NS4		NS4		NS4		NS4		NS4	
		DEPTH:	5		10		15		20		NS4-SS1-S01	
COMPOUND NAME	UNITS	TEST CODE	RESULT	QUALIFIER	RESULT	QUALIFIER	RESULT	QUALIFIER	RESULT	QUALIFIER	RESULT	QUALIFIER
HEXACHLOROBENZENE	UG/KG	BNA	380	U	400	U	400	U	390	U	440	U
HEXACHLOROBUTADIENE	UG/KG	BNA	380	U	400	U	400	U	390	U	440	U
HEXACHLOROCYCLOPENTADIENE	UG/KG	BNA	380	U	400	U	400	U	390	U	440	U
HEXACHLOROETHANE	UG/KG	BNA	380	U	400	U	400	U	390	U	440	U
INDENO(1,2,3-C,D)PYRENE	UG/KG	BNA	380	U	400	U	400	U	390	U	240	J
ISOPHORONE	UG/KG	BNA	380	U	400	U	400	U	390	U	440	U
N-NITROSO-DI-N-PROPYLAMINE	UG/KG	BNA	380	U	400	U	400	U	390	U	440	U
N-NITROSODIPHENYLAMINE (1)	UG/KG	BNA	380	U	400	U	400	U	390	U	440	U
NAPHTHALENE	UG/KG	BNA	380	U	400	U	400	U	390	U	440	U
NITROBENZENE	UG/KG	BNA	380	U	400	U	400	U	390	U	440	U
PENTACHLOROPHENOL	UG/KG	BNA	1900	U	2000	U	2000	U	1900	U	2100	U
PHENANTHRENE	UG/KG	BNA	380	U	400	U	400	U	390	U	200	J
PHENOL	UG/KG	BNA	380	U	400	U	400	U	390	U	440	U
PYRENE	UG/KG	BNA	380	U	400	U	400	U	390	U	980	
ANTIMONY	MG/KG	CAC METALS	4.3	U	4.5	U	4.5	U	4.5	U	6.0	J
ARSENIC	MG/KG	CAC METALS	1.6	B	1.0	B	2.7		2.2	B	5.4	J
BARIUM	MG/KG	CAC METALS	75.1		25.6	B	74.9		163		171	
BERYLLIUM	MG/KG	CAC METALS	1.7		2.9		3.0		3.1		4.9	
CADMIUM	MG/KG	CAC METALS	0.91	U	0.95	U	0.97	U	0.94	U	1.9	
CHROMIUM	MG/KG	CAC METALS	9.8		18.3		17.1		16.2		67.3	
COBALT	MG/KG	CAC METALS	5.3	B	6.2	B	8.9	B	10.6	B	16.2	
COPPER	MG/KG	CAC METALS	7.7	U	26.5		24.8	U	18.8	U	421	
LEAD	MG/KG	CAC METALS	16.4		3.6		5.0	U	4.4	U	223	J
MERCURY	MG/KG	CAC METALS	0.18	U	0.18	U	0.18	U	0.18	U	0.37	
MOLYBDENUM	MG/KG	CAC METALS	1.6	U	1.7	U	1.7	U	1.9	B	1.9	B
NICKEL	MG/KG	CAC METALS	3.7	U	4.2	B	9.5	U	4.5	U	30.7	
SELENIUM	MG/KG	CAC METALS	0.43	U	0.23	U	0.24	U	0.23	U	0.25	U
SILVER	MG/KG	CAC METALS	1.1	U	0.71	U	0.73	U	1.1	U	2.2	U
THALLIUM	MG/KG	CAC METALS	0.43	U	0.23	U	0.24	U	0.23	U	0.25	B
VANADIUM	MG/KG	CAC METALS	27.5		51.1		44.5		49.9		92.8	
ZINC	MG/KG	CAC METALS	35.5	U	40.6		46.4	U	50.7	U	649	
ANTIMONY	UG/KG	CAC METALS										
ARSENIC	UG/KG	CAC METALS										
BARIUM	UG/KG	CAC METALS										
BERYLLIUM	UG/KG	CAC METALS										
CADMIUM	UG/KG	CAC METALS										
CHROMIUM	UG/KG	CAC METALS										
COBALT	UG/KG	CAC METALS										
COPPER	UG/KG	CAC METALS										
LEAD	UG/KG	CAC METALS										
MERCURY	UG/KG	CAC METALS										
MOLYBDENUM	UG/KG	CAC METALS										
NICKEL	UG/KG	CAC METALS										
SELENIUM	UG/KG	CAC METALS										
SILVER	UG/KG	CAC METALS										
THALLIUM	UG/KG	CAC METALS										
VANADIUM	UG/KG	CAC METALS										
ZINC	UG/KG	CAC METALS										
CAC WET EXTRACTION	DATE	CAC WET EX										
COPPER	MG/L	CAC WET EX									9.43	
LEAD	MG/L	CAC WET EX									5.06	

NAVSTA-SAN DIEGO
SITE 4 SOILS

		SAMPLE NUMBER:	NS4-MW4-S01-5		NS4-MW4-S02-10		NS4-MW4-S03-15		NS4-MW4-S04-20		NS4-SS1-S01	
		SAMPLING DATE:	01/29/91		01/29/91		01/29/91		01/29/91		02/12/91	
		BORING:	MW4		MW4		MW4		MW4		SS1	
		SITE:	NS4		NS4		NS4		NS4		NS4	
		DEPTH:	5		10		15		20		NS4-SS1-S01	
COMPOUND NAME	UNITS	TEST CODE	RESULT	QUALIFIER	RESULT	QUALIFIER	RESULT	QUALIFIER	RESULT	QUALIFIER	RESULT	QUALIFIER
TOTAL CYANIDE	MG/KG	CN	1	U	1	U	1	U	1	U		
TOTAL CYANIDE	MG/L	CN										
4,4'-DDD	UG/KG	PEST / PCB	19	U	20	U	20	U	19	U	210	UJ
4,4'-DDE	UG/KG	PEST / PCB	19	U	20	U	20	U	19	U	210	UJ
4,4'-DDT	UG/KG	PEST / PCB	19	U	20	U	20	U	19	U	210	UJ
ALDRIN	UG/KG	PEST / PCB	9.3	U	9.8	U	9.8	U	9.5	U	110	UJ
ALPHA-BHC	UG/KG	PEST / PCB	9.3	U	9.8	U	9.8	U	9.5	U	110	UJ
ALPHA-CHLORDANE	UG/KG	PEST / PCB	93	U	98	U	98	U	95	U	180	J
BETA-BHC	UG/KG	PEST / PCB	9.3	U	9.8	U	9.8	U	9.5	U	110	UJ
DELTA-BHC	UG/KG	PEST / PCB	9.3	U	9.8	U	9.8	U	9.5	U	110	UJ
DIBUTYL CHLORENDATE	UG/KG	PEST / PCB	70		53		91		90		67	
DIELDRIN	UG/KG	PEST / PCB	19	U	20	U	20	U	19	U	210	UJ
ENDOSULFAN I	UG/KG	PEST / PCB	9.3	U	9.8	U	9.8	U	9.5	U	110	UJ
ENDOSULFAN II	UG/KG	PEST / PCB	19	U	20	U	20	U	19	U	210	UJ
ENDOSULFAN SULFATE	UG/KG	PEST / PCB	19	U	20	U	20	U	19	U	210	UJ
ENDRIN	UG/KG	PEST / PCB	19	U	20	U	20	U	19	U	210	UJ
ENDRIN KETONE	UG/KG	PEST / PCB	19	U	20	U	20	U	19	U	210	UJ
GAMMA-BHC (LINDANE)	UG/KG	PEST / PCB	9.3	U	9.8	U	9.8	U	9.5	U	110	UJ
GAMMA-CHLORDANE	UG/KG	PEST / PCB	93	U	98	U	98	U	95	U	170	J
HEPTACHLOR	UG/KG	PEST / PCB	9.3	U	9.8	U	9.8	U	9.5	U	110	UJ
HEPTACHLOR EPOXIDE	UG/KG	PEST / PCB	9.3	U	9.8	U	9.8	U	9.5	U	110	UJ
METHOXYCHLOR	UG/KG	PEST / PCB	93	U	98	U	98	U	95	U	1100	UJ
PCB-1016	UG/KG	PEST / PCB	93	U	98	U	98	U	95	U	1100	UJ
PCB-1221	UG/KG	PEST / PCB	93	U	98	U	98	U	95	U	1100	UJ
PCB-1232	UG/KG	PEST / PCB	93	U	98	U	98	U	95	U	1100	UJ
PCB-1242	UG/KG	PEST / PCB	93	U	98	U	98	U	95	U	1100	UJ
PCB-1248	UG/KG	PEST / PCB	93	U	98	U	98	U	95	U	1100	UJ
PCB-1254	UG/KG	PEST / PCB	190	U	200	U	200	U	190	U	2100	UJ
PCB-1260	UG/KG	PEST / PCB	190	U	200	U	200	U	190	U	2100	UJ
TOXAPHENE	UG/KG	PEST / PCB	190	U	200	U	200	U	190	U	2100	UJ
DIESEL	MG/KG	TPHC										
JP4	MG/KG	TPHC										
JP5	MG/KG	TPHC										
STODDARD	MG/KG	TPHC	10	U	10	U	10	U	10	U	10	U
DIESEL	UG/KG	TPHC										
JP4	UG/KG	TPHC										
JP5	UG/KG	TPHC										
STODDARD	UG/KG	TPHC										
1,1,1-TRICHLOROETHANE	UG/KG	VOA	6	U	6	U	6	U	6	U	7	U
1,1,2,2-TETRACHLOROETHANE	UG/KG	VOA	6	U	6	U	6	U	6	U	7	U
1,1,2-TRICHLOROETHANE	UG/KG	VOA	6	U	6	U	6	U	6	U	7	U
1,1-DICHLOROETHANE	UG/KG	VOA	6	U	6	U	6	U	6	U	7	U
1,1-DICHLOROETHENE	UG/KG	VOA	6	U	6	U	6	U	6	U	7	U
1,2-DICHLOROETHANE	UG/KG	VOA	6	U	6	U	6	U	6	U	7	U
1,2-DICHLOROETHENE (TOTAL)	UG/KG	VOA	6	U	6	U	6	U	6	U	7	U
1,2-DICHLOROPROPANE	UG/KG	VOA	6	U	6	U	6	U	6	U	7	U
2-BUTANONE	UG/KG	VOA	12	U	12	U	12	U	12	U	13	U
2-HEXANONE	UG/KG	VOA	12	U	12	U	12	U	12	U	13	U
4-METHYL-2-PENTANONE	UG/KG	VOA	12	U	12	U	12	U	12	U	13	U
ACETONE	UG/KG	VOA	15	U	12	U	12	U	12	U	13	U
BENZENE	UG/KG	VOA	6	U	6	U	6	U	6	U	7	U

NAVSTA-SAN DIEGO
SITE 4 SOILS

		SAMPLE NUMBER:	NS4-MW4-S01-5		NS4-MW4-S02-10		NS4-MW4-S03-15		NS4-MW4-S04-20		NS4-SS1-S01	
		SAMPLING DATE:	01/29/91		01/29/91		01/29/91		01/29/91		02/12/91	
		BORING:	MW4		MW4		MW4		MW4		SS1	
		SITE:	NS4		NS4		NS4		NS4		NS4	
		DEPTH:	5		10		15		20		NS4-SS1-S01	
COMPOUND NAME	UNITS	TEST CODE	RESULT	QUALIFIER	RESULT	QUALIFIER	RESULT	QUALIFIER	RESULT	QUALIFIER	RESULT	QUALIFIER
BROMODICHLOROMETHANE	UG/KG	VOA	6	U	6	U	6	U	6	U	7	U
BROMOFORM	UG/KG	VOA	6	U	6	U	6	U	6	U	7	U
BROMOMETHANE	UG/KG	VOA	12	U	12	U	12	U	12	U	13	U
CARBON DISULFIDE	UG/KG	VOA	6	U	11		6	U	6	U	7	U
CARBON TETRACHLORIDE	UG/KG	VOA	6	U	6	U	6	U	6	U	7	U
CHLOROBENZENE	UG/KG	VOA	6	U	6	U	6	U	6	U	7	U
CHLOROETHANE	UG/KG	VOA	12	U	12	U	12	U	12	U	13	U
CHLOROFORM	UG/KG	VOA	6	U	6	U	6	U	6	U	7	U
CHLOROMETHANE	UG/KG	VOA	12	U	12	U	12	U	12	U	13	U
CIS-1,3-DICHLOROPROPENE	UG/KG	VOA	6	U	6	U	6	U	6	U	7	U
DIBROMOCHLOROMETHANE	UG/KG	VOA	6	U	6	U	6	U	6	U	7	U
ETHYLBENZENE	UG/KG	VOA	6	U	6	U	6	U	6	U	7	U
METHYLENE CHLORIDE	UG/KG	VOA	8	U	9	U	10	U	9	U	10	U
STYRENE	UG/KG	VOA	6	U	6	U	6	U	6	U	7	U
TETRACHLOROETHENE	UG/KG	VOA	6	U	6	U	6	U	6	U	7	U
TOLUENE	UG/KG	VOA	6	U	6	U	6	U	6	U	7	U
TRANS-1,3-DICHLOROPROPENE	UG/KG	VOA	6	U	6	U	6	U	6	U	7	U
TRICHLOROETHENE	UG/KG	VOA	6	U	6	U	6	U	6	U	7	U
VINYL ACETATE	UG/KG	VOA	12	U	12	U	12	U	12	U	13	U
VINYL CHLORIDE	UG/KG	VOA	12	U	12	U	12	U	12	U	13	U
XYLENES (TOTAL)	UG/KG	VOA	6	U	6	U	6	U	6	U	7	U

NAVSTA-SAN DIEGO
SITE 4 SOILS

		SAMPLE NUMBER:	NS4-SS2-S01		NS4-SS3-S01		NS4-TB-01/29/91		NS4-TB-02/11/91		NS4-TB-1/24/91	
		SAMPLING DATE:	02/12/91		02/12/91		01/29/91		02/11/91		01/24/91	
		BORING:	SS2		SS3		TB		TB		TB	
		SITE:	NS4		NS4		NS4		NS4		NS4	
		DEPTH:	NS4-SS2-S01		NS4-SS3-S01		NS4-TB-01/29/91		NS4-TB-02/11/91		NS4-TB-1/24/91	
COMPOUND NAME	UNITS	TEST CODE	RESULT	QUALIFIER	RESULT	QUALIFIER	RESULT	QUALIFIER	RESULT	QUALIFIER	RESULT	QUALIFIER
1,2,4-TRICHLOROBENZENE	UG/KG	BNA	620	U	440	U						
1,2-DICHLOROBENZENE	UG/KG	BNA	620	U	440	U						
1,3-DICHLOROBENZENE	UG/KG	BNA	620	U	440	U						
1,4-DICHLOROBENZENE	UG/KG	BNA	620	U	440	U						
2,4,5-TRICHLOROPHENOL	UG/KG	BNA	3000	U	2100	U						
2,4,6-TRICHLOROPHENOL	UG/KG	BNA	620	U	440	U						
2,4-DICHLOROPHENOL	UG/KG	BNA	620	U	440	U						
2,4-DIMETHYLPHENOL	UG/KG	BNA	620	U	440	U						
2,4-DINITROPHENOL	UG/KG	BNA	3000	U	2100	U						
2,4-DINITROTOLUENE	UG/KG	BNA	620	U	440	U						
2,6-DINITROTOLUENE	UG/KG	BNA	620	U	440	U						
2-CHLORONAPHTHALENE	UG/KG	BNA	620	U	440	U						
2-CHLOROPHENOL	UG/KG	BNA	620	U	440	U						
2-METHYLNAPHTHALENE	UG/KG	BNA	620	U	440	U						
2-METHYLPHENOL	UG/KG	BNA	620	U	440	U						
2-NITROANILINE	UG/KG	BNA	3000	U	2100	U						
2-NITROPHENOL	UG/KG	BNA	620	U	440	U						
3,3'-DICHLOROBENZIDINE	UG/KG	BNA	1200	U	880	U						
3-NITROANILINE	UG/KG	BNA	3000	U	2100	U						
4,6-DINITRO-2-METHYLPHENOL	UG/KG	BNA	3000	U	2100	U						
4-BROMOPHENYL-PHENYLETHER	UG/KG	BNA	620	U	440	U						
4-CHLORO-3-METHYLPHENOL	UG/KG	BNA	620	U	440	U						
4-CHLOROANILINE	UG/KG	BNA	620	U	440	U						
4-CHLOROPHENYL-PHENYLETHER	UG/KG	BNA	620	U	440	U						
4-METHYLPHENOL	UG/KG	BNA	620	U	440	U						
4-NITROANILINE	UG/KG	BNA	3000	U	2100	U						
4-NITROPHENOL	UG/KG	BNA	3000	U	2100	U						
ACENAPHTHENE	UG/KG	BNA	620	U	440	U						
ACENAPHTHYLENE	UG/KG	BNA	620	U	440	U						
ANTHRACENE	UG/KG	BNA	620	U	440	U						
BENZO(A)ANTHRACENE	UG/KG	BNA	620	U	440	U						
BENZO(A)PYRENE	UG/KG	BNA	390	J	440	U						
BENZO(B)FLUORANTHENE	UG/KG	BNA	620	U	440	U						
BENZO(G,H,I)PERYLENE	UG/KG	BNA	150	J	440	U						
BENZO(K)FLUORANTHENE	UG/KG	BNA	620	U	440	U						
BENZOIC ACID	UG/KG	BNA	160	J	2100	U						
BENZYL ALCOHOL	UG/KG	BNA	620	U	440	U						
BIS(2-CHLOROETHOXY)METHANE	UG/KG	BNA	620	U	440	U						
BIS(2-CHLOROETHYL)ETHER	UG/KG	BNA	620	U	440	U						
BIS(2-CHLOROISOPROPYL)ETHER	UG/KG	BNA	620	U	440	U						
BIS(2-ETHYLHEXYL)PHTHALATE	UG/KG	BNA	2600		440	U						
BUTYLBENZYLPHTHALATE	UG/KG	BNA	620	U	440	U						
CHRYSENE	UG/KG	BNA	420	J	440	U						
DI-N-BUTYLPHTHALATE	UG/KG	BNA	620	U	440	U						
DI-N-OCTYLPHTHALATE	UG/KG	BNA	620	U	440	U						
DIBENZ(A,H)ANTHRACENE	UG/KG	BNA	620	U	440	U						
DIBENZOFURAN	UG/KG	BNA	620	U	440	U						
DIETHYLPHTHALATE	UG/KG	BNA	620	U	440	U						
DIMETHYLPHTHALATE	UG/KG	BNA	620	U	440	U						
FLUORANTHENE	UG/KG	BNA	480	J	440	U						
FLUORENE	UG/KG	BNA	620	U	440	U						

NAVSTA-SAN DIEGO
SITE 4 SOILS

		SAMPLE NUMBER:	NS4-SS2-S01		NS4-SS3-S01		NS4-TB-01/29/91		NS4-TB-02/11/91		NS4-TB-1/24/91	
		SAMPLING DATE:	02/12/91		02/12/91		01/29/91		02/11/91		01/24/91	
		BORING:	SS2		SS3		TB		TB		TB	
		SITE:	NS4		NS4		NS4		NS4		NS4	
		DEPTH:	NS4-SS2-S01		NS4-SS3-S01		NS4-TB-01/29/91		NS4-TB-02/11/91		NS4-TB-1/24/91	
COMPOUND NAME	UNITS	TEST CODE	RESULT	QUALIFIER	RESULT	QUALIFIER	RESULT	QUALIFIER	RESULT	QUALIFIER	RESULT	QUALIFIER
HEXACHLOROBENZENE	UG/KG	BNA	620	U	440	U						
HEXACHLOROBUTADIENE	UG/KG	BNA	620	U	440	U						
HEXACHLOROCYCLOPENTADIENE	UG/KG	BNA	620	U	440	U						
HEXACHLOROETHANE	UG/KG	BNA	620	U	440	U						
INDENO(1,2,3-C,D)PYRENE	UG/KG	BNA	620	U	440	U						
ISOPHORONE	UG/KG	BNA	620	U	440	U						
N-NITROSO-DI-N-PROPYLAMINE	UG/KG	BNA	620	U	440	U						
N-NITROSODIPHENYLAMINE (1)	UG/KG	BNA	620	U	440	U						
NAPHTHALENE	UG/KG	BNA	620	U	440	U						
NITROBENZENE	UG/KG	BNA	620	U	440	U						
PENTACHLOROPHENOL	UG/KG	BNA	3000	U	2100	U						
PHENANTHRENE	UG/KG	BNA	620	U	440	U						
PHENOL	UG/KG	BNA	620	U	440	U						
PYRENE	UG/KG	BNA	1200		440	U						
ANTIMONY	MG/KG	CAC METALS	6.8	U	5.0	U						
ARSENIC	MG/KG	CAC METALS	12.9		2.4	B						
BARIUM	MG/KG	CAC METALS	291		75.8							
BERYLLIUM	MG/KG	CAC METALS	4.5		2.7							
CADMIUM	MG/KG	CAC METALS	3.9		1.0	U						
CHROMIUM	MG/KG	CAC METALS	51.0		19.1							
COBALT	MG/KG	CAC METALS	16.1	B	8.3	B						
COPPER	MG/KG	CAC METALS	466		28.4	U						
LEAD	MG/KG	CAC METALS	267		11.4							
MERCURY	MG/KG	CAC METALS	0.79		0.20	U						
MOLYBDENUM	MG/KG	CAC METALS	3.7	B	1.8	U						
NICKEL	MG/KG	CAC METALS	26.1		4.8	B						
SELENIUM	MG/KG	CAC METALS	0.36	U	0.52	U						
SILVER	MG/KG	CAC METALS	3.4	B	1.5	U						
THALLIUM	MG/KG	CAC METALS	0.36	U	0.26	U						
VANADIUM	MG/KG	CAC METALS	92.0		55.0							
ZINC	MG/KG	CAC METALS	727		57.7	U						
ANTIMONY	UG/KG	CAC METALS										
ARSENIC	UG/KG	CAC METALS										
BARIUM	UG/KG	CAC METALS										
BERYLLIUM	UG/KG	CAC METALS										
CADMIUM	UG/KG	CAC METALS										
CHROMIUM	UG/KG	CAC METALS										
COBALT	UG/KG	CAC METALS										
COPPER	UG/KG	CAC METALS										
LEAD	UG/KG	CAC METALS										
MERCURY	UG/KG	CAC METALS										
MOLYBDENUM	UG/KG	CAC METALS										
NICKEL	UG/KG	CAC METALS										
SELENIUM	UG/KG	CAC METALS										
SILVER	UG/KG	CAC METALS										
THALLIUM	UG/KG	CAC METALS										
VANADIUM	UG/KG	CAC METALS										
ZINC	UG/KG	CAC METALS										
CAC WET EXTRACTION	DATE	CAC WET EX										
COPPER	MG/L	CAC WET EX	0.374									
LEAD	MG/L	CAC WET EX	6.26									

NAVSTA-SAN DIEGO
SITE 4 SOILS

		SAMPLE NUMBER:	NS4-SS2-S01		NS4-SS3-S01		NS4-TB-01/29/91		NS4-TB-02/11/91		NS4-TB-1/24/91	
		SAMPLING DATE:	02/12/91		02/12/91		01/29/91		02/11/91		01/24/91	
		BORING:	SS2		SS3		TB		TB		TB	
		SITE:	NS4		NS4		NS4		NS4		NS4	
		DEPTH:	NS4-SS2-S01		NS4-SS3-S01		NS4-TB-01/29/91		NS4-TB-02/11/91		NS4-TB-1/24/91	
COMPOUND NAME	UNITS	TEST CODE	RESULT	QUALIFIER	RESULT	QUALIFIER	RESULT	QUALIFIER	RESULT	QUALIFIER	RESULT	QUALIFIER
TOTAL CYANIDE	MG/KG	CN										
TOTAL CYANIDE	MG/L	CN										
4,4'-DDD	UG/KG	PEST / PCB	30	U	21	U						
4,4'-DDE	UG/KG	PEST / PCB	30	U	21	U						
4,4'-DDT	UG/KG	PEST / PCB	30	U	21	U						
ALDRIN	UG/KG	PEST / PCB	15	U	11	U						
ALPHA-BHC	UG/KG	PEST / PCB	15	U	11	U						
ALPHA-CHLORDANE	UG/KG	PEST / PCB	150	U	110	U						
BETA-BHC	UG/KG	PEST / PCB	15	U	11	U						
DELTA-BHC	UG/KG	PEST / PCB	15	U	11	U						
DIBUTYL CHLORENDATE	UG/KG	PEST / PCB	30		72							
DIELDRIN	UG/KG	PEST / PCB	30	U	21	U						
ENDOSULFAN I	UG/KG	PEST / PCB	15	U	11	U						
ENDOSULFAN II	UG/KG	PEST / PCB	30	U	21	U						
ENDOSULFAN SULFATE	UG/KG	PEST / PCB	30	U	21	U						
ENDRIN	UG/KG	PEST / PCB	30	U	21	U						
ENDRIN KETONE	UG/KG	PEST / PCB	30	U	21	U						
GAMMA-BHC (LINDANE)	UG/KG	PEST / PCB	15	U	11	U						
GAMMA-CHLORDANE	UG/KG	PEST / PCB	150	U	110	U						
HEPTACHLOR	UG/KG	PEST / PCB	15	U	11	U						
HEPTACHLOR EPOXIDE	UG/KG	PEST / PCB	15	U	11	U						
METHOXYCHLOR	UG/KG	PEST / PCB	150	U	110	U						
PCB-1016	UG/KG	PEST / PCB	150	U	110	U						
PCB-1221	UG/KG	PEST / PCB	150	U	110	U						
PCB-1232	UG/KG	PEST / PCB	150	U	110	U						
PCB-1242	UG/KG	PEST / PCB	150	U	110	U						
PCB-1248	UG/KG	PEST / PCB	150	U	110	U						
PCB-1254	UG/KG	PEST / PCB	300	U	210	U						
PCB-1260	UG/KG	PEST / PCB	300	U	210	U						
TOXAPHENE	UG/KG	PEST / PCB	300	U	210	U						
DIESEL	MG/KG	TPHC										
JP4	MG/KG	TPHC										
JP5	MG/KG	TPHC										
STODDARD	MG/KG	TPHC	10	U	10	U						
DIESEL	UG/KG	TPHC										
JP4	UG/KG	TPHC										
JP5	UG/KG	TPHC										
STODDARD	UG/KG	TPHC										
1,1,1-TRICHLOROETHANE	UG/KG	VOA	9	U	7	U	5	U	5	U	5	U
1,1,2,2-TETRACHLOROETHANE	UG/KG	VOA	9	U	7	U	5	U	5	U	5	U
1,1,2-TRICHLOROETHANE	UG/KG	VOA	9	U	7	U	5	U	5	U	5	U
1,1-DICHLOROETHANE	UG/KG	VOA	9	U	7	U	5	U	5	U	5	U
1,1-DICHLOROETHENE	UG/KG	VOA	9	U	7	U	5	U	5	U	5	U
1,2-DICHLOROETHANE	UG/KG	VOA	9	U	7	U	5	U	5	U	5	U
1,2-DICHLOROETHENE (TOTAL)	UG/KG	VOA	9	U	7	U	5	U	5	U	5	U
1,2-DICHLOROPROPANE	UG/KG	VOA	9	U	7	U	5	U	5	U	5	U
2-BUTANONE	UG/KG	VOA	19	U	13	U	10	U	10	U	10	U
2-HEXANONE	UG/KG	VOA	19	U	13	U	10	U	10	U	10	U
4-METHYL-2-PENTANONE	UG/KG	VOA	19	U	13	U	10	U	10	U	10	U
ACETONE	UG/KG	VOA	40	U	13	U	10	U	6	BJ	10	U
BENZENE	UG/KG	VOA	9	U	7	U	5	U	5	U	5	U

NAVSTA-SAN DIEGO
SITE 4 SOILS

		SAMPLE NUMBER:	NS4-SS2-S01		NS4-SS3-S01		NS4-TB-01/29/91		NS4-TB-02/11/91		NS4-TB-1/24/91	
		SAMPLING DATE:	02/12/91		02/12/91		01/29/91		02/11/91		01/24/91	
		BORING:	SS2		SS3		TB		TB		TB	
		SITE:	NS4		NS4		NS4		NS4		NS4	
		DEPTH:	NS4-SS2-S01		NS4-SS3-S01		NS4-TB-01/29/91		NS4-TB-02/11/91		NS4-TB-1/24/91	
COMPOUND NAME	UNITS	TEST CODE	RESULT	QUALIFIER	RESULT	QUALIFIER	RESULT	QUALIFIER	RESULT	QUALIFIER	RESULT	QUALIFIER
BROMODICHLOROMETHANE	UG/KG	VOA	9	U	7	U	5	U	5	U	5	U
BROMOFORM	UG/KG	VOA	9	U	7	U	5	U	5	U	5	U
BROMOMETHANE	UG/KG	VOA	19	U	13	U	10	U	10	U	10	U
CARBON DISULFIDE	UG/KG	VOA	9	U	7	U	5	U	5	U	5	U
CARBON TETRACHLORIDE	UG/KG	VOA	9	U	7	U	5	U	5	U	5	U
CHLOROBENZENE	UG/KG	VOA	9	U	7	U	5	U	5	U	5	U
CHLOROETHANE	UG/KG	VOA	19	U	13	U	10	U	10	U	10	U
CHLOROFORM	UG/KG	VOA	9	U	7	U	5	U	1	J	5	U
CHLOROMETHANE	UG/KG	VOA	19	U	13	U	10	U	10	U	10	U
CIS-1,3-DICHLOROPROPENE	UG/KG	VOA	9	U	7	U	5	U	5	U	5	U
DIBROMOCHLOROMETHANE	UG/KG	VOA	9	U	7	U	5	U	5	U	5	U
ETHYLBENZENE	UG/KG	VOA	9	U	7	U	5	U	5	U	5	U
METHYLENE CHLORIDE	UG/KG	VOA	10	U	11	U	6	B	4	BJ	4	BJ
STYRENE	UG/KG	VOA	9	U	7	U	5	U	5	U	5	U
TETRACHLOROETHENE	UG/KG	VOA	9	U	7	U	5	U	5	U	5	U
TOLUENE	UG/KG	VOA	9	U	7	U	5	U	5	U	5	U
TRANS-1,3-DICHLOROPROPENE	UG/KG	VOA	9	U	7	U	5	U	5	U	5	U
TRICHLOROETHENE	UG/KG	VOA	9	U	7	U	5	U	5	U	5	U
VINYL ACETATE	UG/KG	VOA	19	U	13	U	10	U	10	U	10	U
VINYL CHLORIDE	UG/KG	VOA	19	U	13	U	10	U	10	U	10	U
XYLENES (TOTAL)	UG/KG	VOA	9	U	7	U	5	U	5	U	5	U

NAVSTA-SAN DIEGO
SITE 4 SOILS

		SAMPLE NUMBER:	NS4-TB-1/25/91		NS4-WAER		NS4-WAER-1/25/91	
		SAMPLING DATE:	01/25/91		01/24/91		01/25/91	
		BORING:	TB				WAER	
		SITE:	NS4		NS4		NS4	
		DEPTH:	NS4-TB-1/25/91		NS4-WAER		NS4-WAER-1/25/91	
COMPOUND NAME	UNITS	TEST CODE	RESULT	QUALIFIER	RESULT	QUALIFIER	RESULT	QUALIFIER
1,2,4-TRICHLOROBENZENE	UG/KG	BNA			10	U	10	U
1,2-DICHLOROBENZENE	UG/KG	BNA			10	U	10	U
1,3-DICHLOROBENZENE	UG/KG	BNA			10	U	10	U
1,4-DICHLOROBENZENE	UG/KG	BNA			10	U	10	U
2,4,5-TRICHLOROPHENOL	UG/KG	BNA			50	U	50	U
2,4,6-TRICHLOROPHENOL	UG/KG	BNA			10	U	10	U
2,4-DICHLOROPHENOL	UG/KG	BNA			10	U	10	U
2,4-DIMETHYLPHENOL	UG/KG	BNA			10	U	10	U
2,4-DINITROPHENOL	UG/KG	BNA			50	U	50	U
2,4-DINITROTOLUENE	UG/KG	BNA			10	U	10	U
2,6-DINITROTOLUENE	UG/KG	BNA			10	U	10	U
2-CHLORONAPHTHALENE	UG/KG	BNA			10	U	10	U
2-CHLOROPHENOL	UG/KG	BNA			10	U	10	U
2-METHYLNAPHTHALENE	UG/KG	BNA			10	U	10	U
2-METHYLPHENOL	UG/KG	BNA			10	U	10	U
2-NITROANILINE	UG/KG	BNA			50	U	50	U
2-NITROPHENOL	UG/KG	BNA			10	U	10	U
3,3'-DICHLOROBENZIDINE	UG/KG	BNA			20	U	20	U
3-NITROANILINE	UG/KG	BNA			50	U	50	U
4,6-DINITRO-2-METHYLPHENOL	UG/KG	BNA			50	U	50	U
4-BROMOPHENYL-PHENYLETHER	UG/KG	BNA			10	U	10	U
4-CHLORO-3-METHYLPHENOL	UG/KG	BNA			10	U	10	U
4-CHLOROANILINE	UG/KG	BNA			10	U	10	U
4-CHLOROPHENYL-PHENYLETHER	UG/KG	BNA			10	U	10	U
4-METHYLPHENOL	UG/KG	BNA			10	U	10	U
4-NITROANILINE	UG/KG	BNA			50	U	50	U
4-NITROPHENOL	UG/KG	BNA			50	U	50	U
ACENAPHTHENE	UG/KG	BNA			10	U	10	U
ACENAPHTHYLENE	UG/KG	BNA			10	U	10	U
ANTHRACENE	UG/KG	BNA			10	U	10	U
BENZO(A)ANTHRACENE	UG/KG	BNA			10	U	10	U
BENZO(A)PYRENE	UG/KG	BNA			10	U	10	U
BENZO(B)FLUORANTHENE	UG/KG	BNA			10	U	10	U
BENZO(G,H,I)PERYLENE	UG/KG	BNA			10	U	10	U
BENZO(K)FLUORANTHENE	UG/KG	BNA			10	U	10	U
BENZOIC ACID	UG/KG	BNA			50	U	50	U
BENZYL ALCOHOL	UG/KG	BNA			10	U	10	U
BIS(2-CHLOROETHOXY)METHANE	UG/KG	BNA			10	U	10	U
BIS(2-CHLOROETHYL)ETHER	UG/KG	BNA			10	U	10	U
BIS(2-CHLOROISOPROPYL)ETHER	UG/KG	BNA			10	U	10	U
BIS(2-ETHYLHEXYL)PHTHALATE	UG/KG	BNA			10	U	10	U
BUTYLBENZYLPHTHALATE	UG/KG	BNA			10	U	10	U
CHRYSENE	UG/KG	BNA			10	U	10	U
DI-N-BUTYLPHTHALATE	UG/KG	BNA			10	U	10	U
DI-N-OCTYLPHTHALATE	UG/KG	BNA			10	U	10	U
DIBENZ(A,H)ANTHRACENE	UG/KG	BNA			10	U	10	U
DIBENZOFURAN	UG/KG	BNA			10	U	10	U
DIETHYLPHTHALATE	UG/KG	BNA			10	U	10	U
DIMETHYLPHTHALATE	UG/KG	BNA			10	U	10	U
FLUORANTHENE	UG/KG	BNA			10	U	10	U
FLUORENE	UG/KG	BNA			10	U	10	U

NAVSTA-SAN DIEGO
SITE 4 SOILS

		SAMPLE NUMBER:	NS4-TB-1/25/91		NS4-WAER		NS4-WAER-1/25/91	
		SAMPLING DATE:	01/25/91		01/24/91		01/25/91	
		BORING:	TB				WAER	
		SITE:	NS4		NS4		NS4	
		DEPTH:	NS4-TB-1/25/91		NS4-WAER		NS4-WAER-1/25/91	
COMPOUND NAME	UNITS	TEST CODE	RESULT	QUALIFIER	RESULT	QUALIFIER	RESULT	QUALIFIER
HEXACHLOROBENZENE	UG/KG	BNA			10	U	10	U
HEXACHLOROBUTADIENE	UG/KG	BNA			10	U	10	U
HEXACHLOROCYCLOPENTADIENE	UG/KG	BNA			10	U	10	U
HEXACHLOROETHANE	UG/KG	BNA			10	U	10	U
INDENO(1,2,3-C,D)PYRENE	UG/KG	BNA			10	U	10	U
ISOPHORONE	UG/KG	BNA			10	U	10	U
N-NITROSO-DI-N-PROPYLAMINE	UG/KG	BNA			10	U	10	U
N-NITROSODIPHENYLAMINE (1)	UG/KG	BNA			10	U	10	U
NAPHTHALENE	UG/KG	BNA			10	U	10	U
NITROBENZENE	UG/KG	BNA			10	U	10	U
PENTACHLOROPHENOL	UG/KG	BNA			50	U	50	U
PHENANTHRENE	UG/KG	BNA			10	U	10	U
PHENOL	UG/KG	BNA			10	U	10	U
PYRENE	UG/KG	BNA			10	U	10	U
ANTIMONY	MG/KG	CAC METALS						
ARSENIC	MG/KG	CAC METALS						
BARIUM	MG/KG	CAC METALS						
BERYLLIUM	MG/KG	CAC METALS						
CADMIUM	MG/KG	CAC METALS						
CHROMIUM	MG/KG	CAC METALS						
COBALT	MG/KG	CAC METALS						
COPPER	MG/KG	CAC METALS						
LEAD	MG/KG	CAC METALS						
MERCURY	MG/KG	CAC METALS						
MOLYBDENUM	MG/KG	CAC METALS						
NICKEL	MG/KG	CAC METALS						
SELENIUM	MG/KG	CAC METALS						
SILVER	MG/KG	CAC METALS						
THALLIUM	MG/KG	CAC METALS						
VANADIUM	MG/KG	CAC METALS						
ZINC	MG/KG	CAC METALS						
ANTIMONY	UG/KG	CAC METALS			19.0	U	19.0	U
ARSENIC	UG/KG	CAC METALS			1.0	U	1.0	U
BARIUM	UG/KG	CAC METALS			10.6	B	8.0	B
BERYLLIUM	UG/KG	CAC METALS			1.0	U	1.0	U
CADMIUM	UG/KG	CAC METALS			4.0	U	4.0	U
CHROMIUM	UG/KG	CAC METALS			4.0	U	4.0	U
COBALT	UG/KG	CAC METALS			5.0	U	5.0	U
COPPER	UG/KG	CAC METALS			24.7	B	14.1	B
LEAD	UG/KG	CAC METALS			2.5	B	3.2	
MERCURY	UG/KG	CAC METALS			0.20	U	0.20	U
MOLYBDENUM	UG/KG	CAC METALS			7.0	U	7.0	B
NICKEL	UG/KG	CAC METALS			9.0	U	9.0	U
SELENIUM	UG/KG	CAC METALS			2.0	U	2.0	U
SILVER	UG/KG	CAC METALS			5.8	B	5.8	B
THALLIUM	UG/KG	CAC METALS			1.0	U	1.0	U
VANADIUM	UG/KG	CAC METALS			4.2	B	4.2	B
ZINC	UG/KG	CAC METALS			220		207	
CAC WET EXTRACTION	DATE	CAC WET EX						
COPPER	MG/L	CAC WET EX						
LEAD	MG/L	CAC WET EX						

NAVSTA-SAN DIEGO
SITE 4 SOILS

		SAMPLE NUMBER:	NS4-TB-1/25/91		NS4-WAER		NS4-WAER-1/25/91	
		SAMPLING DATE:	01/25/91		01/24/91		01/25/91	
		BORING:	TB				WAER	
		SITE:	NS4		NS4		NS4	
		DEPTH:	NS4-TB-1/25/91		NS4-WAER		NS4-WAER-1/25/91	
COMPOUND NAME	UNITS	TEST CODE	RESULT	QUALIFIER	RESULT	QUALIFIER	RESULT	QUALIFIER
TOTAL CYANIDE	MG/KG	CN						
TOTAL CYANIDE	MG/L	CN			0.02	UJ	0.02	U
4,4'-DDD	UG/KG	PEST / PCB			0.1	U	0.1	U
4,4'-DDE	UG/KG	PEST / PCB			0.1	U	0.1	U
4,4'-DDT	UG/KG	PEST / PCB			0.1	U	0.1	U
ALDRIN	UG/KG	PEST / PCB			0.05	U	0.05	U
ALPHA-BHC	UG/KG	PEST / PCB			0.05	U	0.05	U
ALPHA-CHLORDANE	UG/KG	PEST / PCB			0.5	U	0.05	U
BETA-BHC	UG/KG	PEST / PCB			0.05	U	0.05	U
DELTA-BHC	UG/KG	PEST / PCB			0.05	U	0.05	U
DIBUTYL CHLORENDATE	UG/KG	PEST / PCB			68		74	
DIELDRIN	UG/KG	PEST / PCB			0.1	U	0.1	U
ENDOSULFAN I	UG/KG	PEST / PCB			0.05	U	0.05	U
ENDOSULFAN II	UG/KG	PEST / PCB			0.1	U	0.1	U
ENDOSULFAN SULFATE	UG/KG	PEST / PCB			0.1	U	0.1	U
ENDRIN	UG/KG	PEST / PCB			0.1	U	0.1	U
ENDRIN KETONE	UG/KG	PEST / PCB			0.1	U	0.1	U
GAMMA-BHC (LINDANE)	UG/KG	PEST / PCB			0.05	U	0.05	U
GAMMA-CHLORDANE	UG/KG	PEST / PCB			0.5	U	0.05	U
HEPTACHLOR	UG/KG	PEST / PCB			0.05	U	0.05	U
HEPTACHLOR EPOXIDE	UG/KG	PEST / PCB			0.05	U	0.05	U
METHOXYCHLOR	UG/KG	PEST / PCB			0.5	U	0.05	U
PCB-1016	UG/KG	PEST / PCB			0.5	U	0.05	U
PCB-1221	UG/KG	PEST / PCB			0.5	U	0.05	U
PCB-1232	UG/KG	PEST / PCB			0.5	U	0.05	U
PCB-1242	UG/KG	PEST / PCB			0.5	U	0.05	U
PCB-1248	UG/KG	PEST / PCB			0.5	U	0.05	U
PCB-1254	UG/KG	PEST / PCB			1	U	1	U
PCB-1260	UG/KG	PEST / PCB			1	U	1	U
TOXAPHENE	UG/KG	PEST / PCB			1	U	1	U
DIESEL	MG/KG	TPHC						
JP4	MG/KG	TPHC						
JP5	MG/KG	TPHC						
STODDARD	MG/KG	TPHC						
DIESEL	UG/KG	TPHC			250	U	250	U
JP4	UG/KG	TPHC			250	U	250	U
JP5	UG/KG	TPHC			250	U	250	U
STODDARD	UG/KG	TPHC						
1,1,1-TRICHLOROETHANE	UG/KG	VOA	5	U	5	U	5	U
1,1,2,2-TETRACHLOROETHANE	UG/KG	VOA	5	U	5	U	5	U
1,1,2-TRICHLOROETHANE	UG/KG	VOA	5	U	5	U	5	U
1,1-DICHLOROETHANE	UG/KG	VOA	5	U	5	U	5	U
1,1-DICHLOROETHENE	UG/KG	VOA	5	U	5	U	5	U
1,2-DICHLOROETHANE	UG/KG	VOA	5	U	5	U	5	U
1,2-DICHLOROETHENE (TOTAL)	UG/KG	VOA	5	U	5	U	5	U
1,2-DICHLOROPROPANE	UG/KG	VOA	5	U	5	U	5	U
2-BUTANONE	UG/KG	VOA	10	U	10	U	10	U
2-HEXANONE	UG/KG	VOA	10	U	10	U	10	U
4-METHYL-2-PENTANONE	UG/KG	VOA	10	U	10	U	10	U
ACETONE	UG/KG	VOA	4	J	12		22	
BENZENE	*UG/KG*	*VOA*	5	U	5	U	5	U

NAVSTA-SAN DIEGO
SITE 4 SOILS

		SAMPLE NUMBER:	NS4-TB-1/25/91		NS4-WAER		NS4-WAER-1/25/91	
		SAMPLING DATE:	01/25/91		01/24/91		01/25/91	
		BORING:	TB				WAER	
		SITE:	NS4		NS4		NS4	
		DEPTH:	NS4-TB-1/25/91		NS4-WAER		NS4-WAER-1/25/91	
COMPOUND NAME	UNITS	TEST CODE	RESULT	QUALIFIER	RESULT	QUALIFIER	RESULT	QUALIFIER
BROMODICHLOROMETHANE	UG/KG	VOA	5	U	6		8	
BROMOFORM	UG/KG	VOA	5	U	5	U	2	J
BROMOMETHANE	UG/KG	VOA	10	U	10	U	10	U
CARBON DISULFIDE	UG/KG	VOA	5	U	5	U	1	J
CARBON TETRACHLORIDE	UG/KG	VOA	5	U	5	U	5	U
CHLOROBENZENE	UG/KG	VOA	5	U	5	U	5	U
CHLOROETHANE	UG/KG	VOA	10	U	10	U	10	U
CHLOROFORM	UG/KG	VOA	5	U	9		7	
CHLOROMETHANE	UG/KG	VOA	10	U	10	U	10	U
CIS-1,3-DICHLOROPROPENE	UG/KG	VOA	5	U	5	U	5	U
DIBROMOCHLOROMETHANE	UG/KG	VOA	5	U	6		8	
ETHYLBENZENE	UG/KG	VOA	5	U	5	U	5	U
METHYLENE CHLORIDE	UG/KG	VOA	5	B	2	BJ	3	BJ
STYRENE	UG/KG	VOA	5	U	5	U	5	U
TETRACHLOROETHENE	UG/KG	VOA	5	U	5	U	5	U
TOLUENE	UG/KG	VOA	5	U	5	U	5	U
TRANS-1,3-DICHLOROPROPENE	UG/KG	VOA	5	U	5	U	5	U
TRICHLOROETHENE	UG/KG	VOA	5	U	5	U	5	U
VINYL ACETATE	UG/KG	VOA	10	U	10	U	10	U
VINYL CHLORIDE	UG/KG	VOA	10	U	10	U	10	U
XYLENES (TOTAL)	UG/KG	VOA	5	U	5	U	5	U

NAVSTA-SAN DIEGO
SITE 7 SOILS

		SAMPLE NUMBER:	NS7-BH1-S01-4		NS7-BH1-S02-9		NS7-BH1-S03-14		NS7-BH1-S03-14-FD		NS7-BH1-S04-19	
		SAMPLING DATE:	01/22/91		01/22/91		01/22/91		01/22/91		01/22/91	
		BORING:	BH1		BH1		BH1		BH1		BH1	
		SITE:	NS7		NS7		NS7		NS7		NS7	
		DEPTH:	4		9		14		14-FD		19	
COMPOUND NAME	UNITS	TEST CODE	RESULT	QUALIFIER	RESULT	QUALIFIER	RESULT	QUALIFIER	RESULT	QUALIFIER	RESULT	QUALIFIER
1,2,4-TRICHLOROBENZENE	UG/KG	BNA	2800	U	3800	UR	120	J	380	U	400	U
1,2-DICHLOROBENZENE	UG/KG	BNA	2800	U	3800	UR	370	U	380	U	400	U
1,3-DICHLOROBENZENE	UG/KG	BNA	2800	U	3800	UR	370	U	380	U	400	U
1,4-DICHLOROBENZENE	UG/KG	BNA	2800	U	3800	UR	210	J	380	U	400	U
2,4,5-TRICHLOROPHENOL	UG/KG	BNA	14000	U	19000	UR	1800	U	1800	U	2000	U
2,4,6-TRICHLOROPHENOL	UG/KG	BNA	2800	U	3800	UR	370	U	380	U	400	U
2,4-DICHLOROPHENOL	UG/KG	BNA	2800	U	3800	UR	370	U	380	U	400	U
2,4-DIMETHYLPHENOL	UG/KG	BNA	2800	U	3800	UR	370	U	380	U	400	U
2,4-DINITROPHENOL	UG/KG	BNA	14000	U	19000	UR	1800	U	1800	U	2000	U
2,4-DINITROTOLUENE	UG/KG	BNA	2800	U	3800	UR	370	U	380	U	400	U
2,6-DINITROTOLUENE	UG/KG	BNA	2800	U	3800	UR	370	U	380	U	400	U
2-CHLORONAPHTHALENE	UG/KG	BNA	2800	U	3800	UR	370	U	380	U	400	U
2-CHLOROPHENOL	UG/KG	BNA	2800	U	3800	UR	370	U	380	U	400	U
2-METHYLNAPHTHALENE	UG/KG	BNA	1900	J	830	J	720		260	J	400	U
2-METHYLPHENOL	UG/KG	BNA	2800	U	3800	UR	370	U	380	U	400	U
2-NITROANILINE	UG/KG	BNA	14000	U	19000	UR	1800	U	1800	U	2000	U
2-NITROPHENOL	UG/KG	BNA	2800	U	3800	UR	370	U	380	U	400	U
3,3'-DICHLOROBENZIDINE	UG/KG	BNA	5600	U	7700	UR	750	U	760	U	810	U
3-NITROANILINE	UG/KG	BNA	14000	U	19000	UR	1800	U	1800	U	2000	U
4,6-DINITRO-2-METHYLPHENOL	UG/KG	BNA	14000	U	19000	UR	1800	U	1800	U	2000	U
4-BROMOPHENYL-PHENYLETHER	UG/KG	BNA	2800	U	3800	UR	370	U	380	U	400	U
4-CHLORO-3-METHYLPHENOL	UG/KG	BNA	2800	U	3800	UR	370	U	380	U	400	U
4-CHLOROANILINE	UG/KG	BNA	540	J	3800	UR	1300		490		400	U
4-CHLOROPHENYL-PHENYLETHER	UG/KG	BNA	2800	U	3800	UR	370	U	380	U	400	U
4-METHYLPHENOL	UG/KG	BNA	2800	U	3800	UR	370	U	380	U	400	U
4-NITROANILINE	UG/KG	BNA	14000	U	19000	UR	1800	U	1800	U	2000	U
4-NITROPHENOL	UG/KG	BNA	14000	U	19000	UR	1800	U	1800	U	2000	U
ACENAPHTHENE	UG/KG	BNA	2800	U	3800	UR	52	J	380	U	400	U
ACENAPHTHYLENE	UG/KG	BNA	2800	U	3800	UR	370	U	380	U	400	U
ANTHRACENE	UG/KG	BNA	2800	U	3800	UR	370	U	380	U	400	U
BENZO(A)ANTHRACENE	UG/KG	BNA	2800	U	3800	UR	98	J	76	J	400	U
BENZO(A)PYRENE	UG/KG	BNA	2800	U	3800	UR	370	U	62	J	400	U
BENZO(B)FLUORANTHENE	UG/KG	BNA	2800	U	3800	UR	370	U	74	J	400	U
BENZO(G,H,I)PERYLENE	UG/KG	BNA	2800	U	3800	UR	370	U	380	U	400	U
BENZO(K)FLUORANTHENE	UG/KG	BNA	2800	U	3800	UR	370	U	65	J	400	U
BENZOIC ACID	UG/KG	BNA	14000	U	19000	UR	1800	U	1800	U	2000	U
BENZYL ALCOHOL	UG/KG	BNA	2800	U	3800	UR	370	U	380	U	400	U
BIS(2-CHLOROETHOXY)METHANE	UG/KG	BNA	2800	U	3800	UR	370	U	380	U	400	U
BIS(2-CHLOROETHYL)ETHER	UG/KG	BNA	2800	U	3800	UR	370	U	380	U	400	U
BIS(2-CHLOROISOPROPYL)ETHER	UG/KG	BNA	2800	U	3800	UR	370	U	380	U	400	U
BIS(2-ETHYLHEXYL)PHTHALATE	UG/KG	BNA	16000		11000	J	5400		2800		400	U
BUTYLBENZYLPHTHALATE	UG/KG	BNA	2800	U	3800	UR	370	U	380	U	400	U
CHRYSENE	UG/KG	BNA	2800	U	500	J	370	U	93	J	400	U
DI-N-BUTYLPHTHALATE	UG/KG	BNA	2800	U	3800	UR	150	J	380	U	400	U
DI-N-OCTYLPHTHALATE	UG/KG	BNA	2800	U	3800	UR	230	J	380	U	400	U
DIBENZ(A,H)ANTHRACENE	UG/KG	BNA	2800	U	3800	UR	370	U	380	U	400	U
DIBENZOFURAN	UG/KG	BNA	2800	U	3800	UR	370	U	380	U	400	U
DIETHYLPHTHALATE	UG/KG	BNA	2800	U	3800	UR	370	U	380	U	400	U
DIMETHYLPHTHALATE	UG/KG	BNA	2800	U	3800	UR	370	U	380	U	400	U
FLUORANTHENE	UG/KG	BNA	1300	J	760	J	220	J	150	J	400	U
FLUORENE	UG/KG	BNA	2800	U	3800	UR	120	J	49	J	400	U

NAVSTA-SAN DIEGO
SITE 7 SOILS

		SAMPLE NUMBER:	NS7-BH1-S01-4		NS7-BH1-S02-9		NS7-BH1-S03-14		NS7-BH1-S03-14-FD		NS7-BH1-S04-19	
		SAMPLING DATE:	01/22/91		01/22/91		01/22/91		01/22/91		01/22/91	
		BORING:	BH1		BH1		BH1		BH1		BH1	
		SITE:	NS7		NS7		NS7		NS7		NS7	
		DEPTH:	4		9		14		14-FD		19	
COMPOUND NAME	UNITS	TEST CODE	RESULT	QUALIFIER	RESULT	QUALIFIER	RESULT	QUALIFIER	RESULT	QUALIFIER	RESULT	QUALIFIER
HEXACHLOROBENZENE	UG/KG	BNA	2800	U	3800	UR	370	U	380	U	400	U
HEXACHLOROBUTADIENE	UG/KG	BNA	2800	U	3800	UR	370	U	380	U	400	U
HEXACHLOROCYCLOPENTADIENE	UG/KG	BNA	2800	U	3800	UR	370	U	380	U	400	U
HEXACHLOROETHANE	UG/KG	BNA	2800	U	3800	UR	370	U	380	U	400	U
INDENO(1,2,3-C,D)PYRENE	UG/KG	BNA	2800	U	3800	UR	40	J	380	U	400	U
ISOPHORONE	UG/KG	BNA	2800	U	3800	UR	370	U	380	U	400	U
N-NITROSO-DI-N-PROPYLAMINE	UG/KG	BNA	2800	U	3800	UR	370	U	380	U	400	U
N-NITROSODIPHENYLAMINE (1)	UG/KG	BNA	2800	U	3800	UR	370	U	380	U	400	U
NAPHTHALENE	UG/KG	BNA	530	J	3800	UR	370	U	74	J	400	U
NITROBENZENE	UG/KG	BNA	2800	U	3800	UR	370	U	380	U	400	U
PENTACHLOROPHENOL	UG/KG	BNA	14000	U	19000	UR	1800	U	1800	U	2000	U
PHENANTHRENE	UG/KG	BNA	1300	J	760	J	410		200	J	400	U
PHENOL	UG/KG	BNA	2800	U	3800	UR	370	U	380	U	400	U
PYRENE	UG/KG	BNA	1200	J	860	J	250	J	160	J	400	U
ANTIMONY	UG/KG	CAC METALS	6.0	B	4.3	UJ	4.2	U	6.4	B	5.0	B
ARSENIC	UG/KG	CAC METALS	4.4		4.0	J	3.7		3.2		3.2	
BARIUM	UG/KG	CAC METALS	180		142		84.5		95.7		207	
BERYLLIUM	UG/KG	CAC METALS	0.24	U	0.23	U	0.22	U	0.22	U	0.23	U
CADMIUM	UG/KG	CAC METALS	5.0		3.0		0.88	U	0.87	U	0.93	U
CHROMIUM	UG/KG	CAC METALS	65.0		39.9		15.5		23.1		15.6	
COBALT	UG/KG	CAC METALS	8.5	B	7.4	B	5.9	B	8.4	B	7.9	B
COPPER	UG/KG	CAC METALS	84.9		53.9		15.0		27.2		9.6	
LEAD	UG/KG	CAC METALS	91.4		94.7		23.6		21.2		10.6	
MERCURY	UG/KG	CAC METALS	1.7		1.0		0.22		0.46		0.18	U
MOLYBDENUM	UG/KG	CAC METALS	2.6	B	1.6	U	1.5	U	1.5	U	1.6	U
NICKEL	UG/KG	CAC METALS	24.8		13.5		6.5	B	9.1		4.9	B
SELENIUM	UG/KG	CAC METALS	0.52	B	0.43	UJ	0.45	U	0.46	U	0.47	U
SILVER	UG/KG	CAC METALS	15.0		8.1		2.2	B	3.2		0.70	B
THALLIUM	UG/KG	CAC METALS	0.48	U	0.43	UJ	0.45	U	0.46	U	0.47	U
VANADIUM	UG/KG	CAC METALS	41.9		35.2		30.8		41.2		50.7	
ZINC	UG/KG	CAC METALS	253		162		48.2		74.7		41.2	
CAC WET EXTRACTION	DATE	CAC WET EX										
LEAD	MG/L	CAC WET EX	0.014	U	0.0070	U						
TOTAL CYANIDE	MG/L	CN										
TOTAL CYANIDE	UG/KG	CN	1		1	U	1	U	1	U	1	U
4,4'-DDD	UG/KG	PEST / PCB	98	U	74	UJ	36	U	18	U	20	U
4,4'-DDE	UG/KG	PEST / PCB	290	E	140	J	130		18	U	20	U
4,4'-DDT	UG/KG	PEST / PCB	98	U	74	UJ	36	U	18	U	20	U
ALDRIN	UG/KG	PEST / PCB	49	U	37	UJ	18	U	9.2	U	9.8	U
ALPHA-BHC	UG/KG	PEST / PCB	49	U	37	UJ	18	U	9.2	U	9.8	U
ALPHA-CHLORDANE	UG/KG	PEST / PCB	490	U	370	UJ	180	U	92	U	98	U
BETA-BHC	UG/KG	PEST / PCB	49	U	37	UJ	18	U	9.2	U	9.8	U
DELTA-BHC	UG/KG	PEST / PCB	49	U	37	UJ	18	U	9.2	U	9.8	U
DIELDRIN	UG/KG	PEST / PCB	98	U	74	UJ	36	U	18	U	20	U
ENDOSULFAN I	UG/KG	PEST / PCB	49	U	37	UJ	18	U	9.2	U	9.8	U
ENDOSULFAN II	UG/KG	PEST / PCB	98	U	74	UJ	36	U	18	U	20	U
ENDOSULFAN SULFATE	UG/KG	PEST / PCB	98	U	74	UJ	36	U	38		20	U
ENDRIN	UG/KG	PEST / PCB	98	U	74	UJ	36	U	18	U	20	U
ENDRIN KETONE	UG/KG	PEST / PCB	98	U	74	UJ	36	U	18	U	20	U
GAMMA-BHC (LINDANE)	UG/KG	PEST / PCB	49	U	37	UJ	18	U	9.2	U	9.8	U
GAMMA-CHLORDANE	UG/KG	PEST / PCB	490	U	370	UJ	180	U	92	U	98	U

NAVSTA-SAN DIEGO
SITE 7 SOILS

		SAMPLE NUMBER:	NS7-BH1-S01-4		NS7-BH1-S02-9		NS7-BH1-S03-14		NS7-BH1-S03-14-FD		NS7-BH1-S04-19	
		SAMPLING DATE:	01/22/91		01/22/91		01/22/91		01/22/91		01/22/91	
		BORING:	BH1		BH1		BH1		BH1		BH1	
		SITE:	NS7		NS7		NS7		NS7		NS7	
		DEPTH:	4		9		14		14-FD		19	
COMPOUND NAME	UNITS	TEST CODE	RESULT	QUALIFIER	RESULT	QUALIFIER	RESULT	QUALIFIER	RESULT	QUALIFIER	RESULT	QUALIFIER
HEPTACHLOR	UG/KG	PEST / PCB	49	U	37	UJ	18	U	9.2	U	9.8	U
HEPTACHLOR EPOXIDE	UG/KG	PEST / PCB	49	U	37	UJ	18	U	9.2	U	9.8	U
METHOXYCHLOR	UG/KG	PEST / PCB	490	U	370	UJ	180	U	92	U	98	U
PCB-1016	UG/KG	PEST / PCB	490	U	370	UJ	180	U	92	U	98	U
PCB-1221	UG/KG	PEST / PCB	490	U	370	UJ	180	U	92	U	98	U
PCB-1232	UG/KG	PEST / PCB	490	U	370	UJ	180	U	92	U	98	U
PCB-1242	UG/KG	PEST / PCB	490	U	370	UJ	180	U	92	U	98	U
PCB-1248	UG/KG	PEST / PCB	490	U	370	UJ	180	U	92	U	98	U
PCB-1254	UG/KG	PEST / PCB	2300		1200	J	1530		420		200	U
PCB-1260	UG/KG	PEST / PCB	980	U	740	UJ	360	U	180	U	200	U
TOXAPHENE	UG/KG	PEST / PCB	980	U	740	UJ	360	U	180	U	200	U
1,1,1-TRICHLOROETHANE	UG/KG	VOA	6	U	6	U	6	U	6	U	6	U
1,1,2,2-TETRACHLOROETHANE	UG/KG	VOA	6	U	6	U	6	U	6	U	6	U
1,1,2-TRICHLOROETHANE	UG/KG	VOA	6	U	6	U	6	U	6	U	6	U
1,1-DICHLOROETHANE	UG/KG	VOA	6	U	6	U	6	U	6	U	6	U
1,1-DICHLOROETHENE	UG/KG	VOA	6	U	6	U	6	U	6	U	6	U
1,2-DICHLOROETHANE	UG/KG	VOA	6	U	6	U	6	U	6	U	6	U
1,2-DICHLOROETHENE (TOTAL)	UG/KG	VOA	6	U	6	U	6	U	6	U	6	U
1,2-DICHLOROPROPANE	UG/KG	VOA	6	U	6	U	6	U	6	U	6	U
2-BUTANONE	UG/KG	VOA	32		62		11	U	11	U	22	
2-HEXANONE	UG/KG	VOA	12	U	12	U	11	U	11	U	12	U
4-METHYL-2-PENTANONE	UG/KG	VOA	12	U	5	J	11	U	11	U	12	U
ACETONE	UG/KG	VOA	130	U	210	B	36		63	U	120	U
BENZENE	UG/KG	VOA	6	U	6	U	6	U	6	U	6	U
BROMODICHLOROMETHANE	UG/KG	VOA	6	U	6	U	6	U	6	U	6	U
BROMOFORM	UG/KG	VOA	6	U	6	U	6	U	6	U	6	U
BROMOMETHANE	UG/KG	VOA	12	U	12	U	11	U	11	U	12	U
CARBON DISULFIDE	UG/KG	VOA	6	U	22		2	J	15		31	
CARBON TETRACHLORIDE	UG/KG	VOA	6	U	6	U	6	U	6	U	6	U
CHLOROBENZENE	UG/KG	VOA	6	U	6	U	6	U	6	U	6	U
CHLOROETHANE	UG/KG	VOA	12	U	12	U	11	U	11	U	12	U
CHLOROFORM	UG/KG	VOA	6	U	6	U	6	U	6	U	6	U
CHLOROMETHANE	UG/KG	VOA	12	U	12	U	11	U	11	U	12	U
CIS-1,3-DICHLOROPROPENE	UG/KG	VOA	6	U	6	U	6	U	6	U	6	U
DIBROMOCHLOROMETHANE	UG/KG	VOA	6	U	6	U	6	U	6	U	6	U
ETHYLBENZENE	UG/KG	VOA	6	J	6	U	6	U	6	U	6	U
METHYLENE CHLORIDE	UG/KG	VOA	7	U	8	U	14	U	10	U	13	U
STYRENE	UG/KG	VOA	6	U	6	U	6	U	6	U	6	U
TETRACHLOROETHENE	UG/KG	VOA	6	U	6	U	6	U	2	J	6	U
TOLUENE	UG/KG	VOA	4	J	12		6	U	2	J	6	U
TRANS-1,3-DICHLOROPROPENE	UG/KG	VOA	6	U	6	U	6	U	6	U	6	U
TRICHLOROETHENE	UG/KG	VOA	6	U	4	J	6	U	6	U	6	U
VINYL ACETATE	UG/KG	VOA	12	U	12	U	11	U	11	U	12	U
VINYL CHLORIDE	UG/KG	VOA	12	U	12	U	11	U	11	U	12	U
XYLENES (TOTAL)	UG/KG	VOA	34		72		6	U	8		8	

NAVSTA-SAN DIEGO
SITE 7 SOILS

		SAMPLE NUMBER:	NS7-BH2-S01-5		NS7-BH2-S02-10		NS7-BH2-S03-15		NS7-BH3-S01-2		NS7-BH3-S02-8	
		SAMPLING DATE:	01/23/91		01/23/91		01/23/91		01/22/91		01/22/91	
		BORING:	BH2		BH2		BH2		BH3		BH3	
		SITE:	NS7		NS7		NS7		NS7		NS7	
		DEPTH:	5		10		15		2		8	
COMPOUND NAME	UNITS	TEST CODE	RESULT	QUALIFIER	RESULT	QUALIFIER	RESULT	QUALIFIER	RESULT	QUALIFIER	RESULT	QUALIFIER
1,2,4-TRICHLOROBENZENE	UG/KG	BNA	800	U	780	U	390	U	350	U	360	U
1,2-DICHLOROBENZENE	UG/KG	BNA	180	J	780	U	390	U	350	U	360	U
1,3-DICHLOROBENZENE	UG/KG	BNA	800	U	780	U	390	U	350	U	360	U
1,4-DICHLOROBENZENE	UG/KG	BNA	280	J	510	J	130	J	350	U	360	U
2,4,5-TRICHLOROPHENOL	UG/KG	BNA	3900	U	3800	U	1900	U	1700	U	1800	U
2,4,6-TRICHLOROPHENOL	UG/KG	BNA	800	U	780	U	390	U	350	U	360	U
2,4-DICHLOROPHENOL	UG/KG	BNA	800	U	780	U	390	U	350	U	360	U
2,4-DIMETHYLPHENOL	UG/KG	BNA	800	U	780	U	390	U	350	U	360	U
2,4-DINITROPHENOL	UG/KG	BNA	3900	U	3800	U	1900	U	1700	U	1800	U
2,4-DINITROTOLUENE	UG/KG	BNA	800	U	780	U	390	U	350	U	360	U
2,6-DINITROTOLUENE	UG/KG	BNA	800	U	780	U	390	U	350	U	360	U
2-CHLORONAPHTHALENE	UG/KG	BNA	800	U	780	U	390	U	350	U	360	U
2-CHLOROPHENOL	UG/KG	BNA	800	U	780	U	390	U	350	U	360	U
2-METHYLNAPHTHALENE	UG/KG	BNA	470	J	1100		370	J	350	U	360	U
2-METHYLPHENOL	UG/KG	BNA	800	U	780	U	390	U	350	U	360	U
2-NITROANILINE	UG/KG	BNA	3900	U	3800	U	1900	U	1700	U	1800	U
2-NITROPHENOL	UG/KG	BNA	800	U	780	U	390	U	350	U	360	U
3,3'-DICHLOROBENZIDINE	UG/KG	BNA	1600	U	1600	U	81	J	700	U	730	U
3-NITROANILINE	UG/KG	BNA	3900	U	3800	U	1900	U	1700	U	1800	U
4,6-DINITRO-2-METHYLPHENOL	UG/KG	BNA	3900	U	3800	U	1900	U	1700	U	1800	U
4-BROMOPHENYL-PHENYLETHER	UG/KG	BNA	800	U	780	U	390	U	350	U	360	U
4-CHLORO-3-METHYLPHENOL	UG/KG	BNA	800	U	780	U	390	U	350	U	360	U
4-CHLOROANILINE	UG/KG	BNA	2200		2600		900		350	U	360	U
4-CHLOROPHENYL-PHENYLETHER	UG/KG	BNA	800	U	780	U	390	U	350	U	360	U
4-METHYLPHENOL	UG/KG	BNA	610	J	780	U	390	U	350	U	360	U
4-NITROANILINE	UG/KG	BNA	3900	U	3800	U	1900	U	1700	U	1800	U
4-NITROPHENOL	UG/KG	BNA	3900	U	3800	U	1900	U	1700	U	1800	U
ACENAPHTHENE	UG/KG	BNA	800	U	130	J	72	J	350	U	360	U
ACENAPHTHYLENE	UG/KG	BNA	800	U	780	U	390	U	350	U	360	U
ANTHRACENE	UG/KG	BNA	100	J	260	J	170	J	350	U	360	U
BENZO(A)ANTHRACENE	UG/KG	BNA	180	J	470	J	490		350	U	360	U
BENZO(A)PYRENE	UG/KG	BNA	800	U	290	J	310	J	350	U	360	U
BENZO(B)FLUORANTHENE	UG/KG	BNA	800	U	300	J	390		350	U	96	J
BENZO(G,H,I)PERYLENE	UG/KG	BNA	800	U	780	U	110	J	350	U	360	U
BENZO(K)FLUORANTHENE	UG/KG	BNA	800	U	340	J	310	J	350	U	360	U
BENZOIC ACID	UG/KG	BNA	3900	U	3800	U	1900	U	1700	U	1800	U
BENZYL ALCOHOL	UG/KG	BNA	800	U	780	U	390	U	350	U	360	U
BIS(2-CHLOROETHOXY)METHANE	UG/KG	BNA	800	U	780	U	390	U	350	U	360	U
BIS(2-CHLOROETHYL)ETHER	UG/KG	BNA	800	U	780	U	390	U	350	U	360	U
BIS(2-CHLOROISOPROPYL)ETHER	UG/KG	BNA	800	U	780	U	390	U	350	U	360	U
BIS(2-ETHYLHEXYL)PHTHALATE	UG/KG	BNA	7400		9000		3100		350	U	360	U
BUTYLBENZYLPHTHALATE	UG/KG	BNA	800	U	780	U	390	U	350	U	360	U
CHRYSENE	UG/KG	BNA	220	J	580	J	520		350	U	79	J
DI-N-BUTYLPHTHALATE	UG/KG	BNA	800	U	780	U	390	U	350	U	360	U
DI-N-OCTYLPHTHALATE	UG/KG	BNA	260	J	340	J	390	U	350	U	360	U
DIBENZ(A,H)ANTHRACENE	UG/KG	BNA	800	U	780	U	390	U	350	U	360	U
DIBENZOFURAN	UG/KG	BNA	800	U	780	U	390	U	350	U	360	U
DIETHYLPHTHALATE	UG/KG	BNA	800	U	780	U	390	U	350	U	360	U
DIMETHYLPHTHALATE	UG/KG	BNA	800	U	780	U	390	U	350	U	360	U
FLUORANTHENE	UG/KG	BNA	410	J	1200		1000		350	U	100	J
FLUORENE	UG/KG	BNA	110	J	210	J	110	J	350	U	360	U

NAVSTA-SAN DIEGO
SITE 7 SOILS

		SAMPLE NUMBER:	NS7-BH2-S01-5		NS7-BH2-S02-10		NS7-BH2-S03-15		NS7-BH3-S01-2		NS7-BH3-S02-8	
		SAMPLING DATE:	01/23/91		01/23/91		01/23/91		01/22/91		01/22/91	
		BORING:	BH2		BH2		BH2		BH3		BH3	
		SITE:	NS7		NS7		NS7		NS7		NS7	
		DEPTH:	5		10		15		2		8	
COMPOUND NAME	UNITS	TEST CODE	RESULT	QUALIFIER	RESULT	QUALIFIER	RESULT	QUALIFIER	RESULT	QUALIFIER	RESULT	QUALIFIER
HEXACHLOROBENZENE	UG/KG	BNA	800	U	780	U	390	U	350	U	360	U
HEXACHLOROBUTADIENE	UG/KG	BNA	800	U	780	U	390	U	350	U	360	U
HEXACHLOROCYCLOPENTADIENE	UG/KG	BNA	800	U	780	U	390	U	350	U	360	U
HEXACHLOROETHANE	UG/KG	BNA	800	U	780	U	390	U	350	U	360	U
INDENO(1,2,3-C,D)PYRENE	UG/KG	BNA	800	U	160	J	120	J	350	U	360	U
ISOPHORONE	UG/KG	BNA	800	U	780	U	390	U	350	U	360	U
N-NITROSO-DI-N-PROPYLAMINE	UG/KG	BNA	800	U	780	U	390	U	350	U	360	U
N-NITROSODIPHENYLAMINE (1)	UG/KG	BNA	800	U	780	U	390	U	350	U	360	U
NAPHTHALENE	UG/KG	BNA	800	U	780	U	390	U	350	U	360	U
NITROBENZENE	UG/KG	BNA	800	U	780	U	390	U	350	U	360	U
PENTACHLOROPHENOL	UG/KG	BNA	3900	U	3800	U	1900	U	1700	U	1800	U
PHENANTHRENE	UG/KG	BNA	500	J	1300		690		350	U	360	U
PHENOL	UG/KG	BNA	800	U	780	U	390	U	350	U	360	U
PYRENE	UG/KG	BNA	500	J	1200		980		350	U	120	J
ANTIMONY	UG/KG	CAC METALS	9.4	J	4.3	U	5.4	B	4.7	B	4.0	U
ARSENIC	UG/KG	CAC METALS	4.6		3.1		2.4		0.99	B	2.9	
BARIUM	UG/KG	CAC METALS	197		103		112		47.2		61.2	
BERYLLIUM	UG/KG	CAC METALS	0.22	U	0.23	U	0.22	U	0.21	U	0.21	U
CADMIUM	UG/KG	CAC METALS	3.9		0.91	U	1.6		0.83	U	0.83	U
CHROMIUM	UG/KG	CAC METALS	58.7		30.5		30.8		8.3		13.0	
COBALT	UG/KG	CAC METALS	9.0	B	6.0	B	10.4	B	6.3	B	8.0	B
COPPER	UG/KG	CAC METALS	79.8		35.0	U	98.3		5.8		11.4	
LEAD	UG/KG	CAC METALS	106		25.2	U	27.6		5.8	B	7.3	
MERCURY	UG/KG	CAC METALS	1.3		0.55		0.49		0.16	U	0.17	U
MOLYBDENUM	UG/KG	CAC METALS	2.5	B	1.6	U	1.5	U	1.5	U	1.5	U
NICKEL	UG/KG	CAC METALS	20.7		9.6		10.9		2.8	B	5.5	B
SELENIUM	UG/KG	CAC METALS	0.45	U	0.46	U	0.45	U	0.42	U	0.42	U
SILVER	UG/KG	CAC METALS	12.2		5.2		4.2	U	0.62	U	0.62	U
THALLIUM	UG/KG	CAC METALS	0.45	U	0.46	U	0.45	U	0.42	U	0.42	U
VANADIUM	UG/KG	CAC METALS	41.8		47.5		58.2		27.2		39.5	
ZINC	UG/KG	CAC METALS	222	U	102	U	97.9	U	17.9		37.2	
CAC WET EXTRACTION	DATE	CAC WET EX										
LEAD	MG/L	CAC WET EX	0.075	U								
TOTAL CYANIDE	MG/L	CN										
TOTAL CYANIDE	UG/KG	CN	1	U	1	U	1	U	1	U	1	U
4,4'-DDD	UG/KG	PEST / PCB	78	UJ	64	U	19	U	17	U	18	U
4,4'-DDE	UG/KG	PEST / PCB	100	J	100		19	U	17	U	18	U
4,4'-DDT	UG/KG	PEST / PCB	78	UJ	64	U	19	U	17	U	18	U
ALDRIN	UG/KG	PEST / PCB	39	UJ	32	U	9.4	U	8.5	U	8.8	U
ALPHA-BHC	UG/KG	PEST / PCB	39	UJ	32	U	9.4	U	8.5	U	8.8	U
ALPHA-CHLORDANE	UG/KG	PEST / PCB	390	UJ	320	U	94	U	85	U	88	U
BETA-BHC	UG/KG	PEST / PCB	39	UJ	32	U	9.4	U	8.5	U	8.8	U
DELTA-BHC	UG/KG	PEST / PCB	39	UJ	32	U	9.4	U	8.5	U	8.8	U
DIELDRIN	UG/KG	PEST / PCB	78	UJ	64	U	19	U	17	U	18	U
ENDOSULFAN I	UG/KG	PEST / PCB	39	UJ	32	U	9.4	U	8.5	U	8.8	U
ENDOSULFAN II	UG/KG	PEST / PCB	78	UJ	64	U	19	U	17	U	18	U
ENDOSULFAN SULFATE	UG/KG	PEST / PCB	78	UJ	64	U	19	U	17	U	18	U
ENDRIN	UG/KG	PEST / PCB	78	UJ	64	U	40		17	U	18	U
ENDRIN KETONE	UG/KG	PEST / PCB	78	UJ	64	U	19	U	17	U	18	U
GAMMA-BHC (LINDANE)	UG/KG	PEST / PCB	39	UJ	32	U	9.4	U	8.5	U	8.8	U
GAMMA-CHLORDANE	UG/KG	PEST / PCB	390	UJ	320	U	94	U	85	U	88	U

NAVSTA-SAN DIEGO
SITE 7 SOILS

		SAMPLE NUMBER:	NS7-BH2-S01-5		NS7-BH2-S02-10		NS7-BH2-S03-15		NS7-BH3-S01-2		NS7-BH3-S02-8	
		SAMPLING DATE:	01/23/91		01/23/91		01/23/91		01/22/91		01/22/91	
		BORING:	BH2		BH2		BH2		BH3		BH3	
		SITE:	NS7		NS7		NS7		NS7		NS7	
		DEPTH:	5		10		15		2		8	
COMPOUND NAME	UNITS	TEST CODE	RESULT	QUALIFIER	RESULT	QUALIFIER	RESULT	QUALIFIER	RESULT	QUALIFIER	RESULT	QUALIFIER
HEPTACHLOR	UG/KG	PEST / PCB	39	UJ	32	U	9.4	U	8.5	U	8.8	U
HEPTACHLOR EPOXIDE	UG/KG	PEST / PCB	39	UJ	32	U	9.4	U	8.5	U	8.8	U
METHOXYCHLOR	UG/KG	PEST / PCB	390	UJ	320	U	94	U	85	U	88	U
PCB-1016	UG/KG	PEST / PCB	390	UJ	320	U	94	U	85	U	88	U
PCB-1221	UG/KG	PEST / PCB	390	UJ	320	U	94	U	85	U	88	U
PCB-1232	UG/KG	PEST / PCB	390	UJ	320	U	94	U	85	U	88	U
PCB-1242	UG/KG	PEST / PCB	390	UJ	320	U	94	U	85	U	88	U
PCB-1248	UG/KG	PEST / PCB	390	UJ	320	U	94	U	85	U	88	U
PCB-1254	UG/KG	PEST / PCB	1000	J	1100		330		170	U	180	U
PCB-1260	UG/KG	PEST / PCB	780	UJ	640	U	190	U	170	U	180	U
TOXAPHENE	UG/KG	PEST / PCB	780	UJ	640	U	190	U	170	U	180	U
1,1,1-TRICHLOROETHANE	UG/KG	VOA	10	U	6	U	6	U	5	U	5	U
1,1,2,2-TETRACHLOROETHANE	UG/KG	VOA	10	U	6	U	6	U	5	U	5	U
1,1,2-TRICHLOROETHANE	UG/KG	VOA	10	U	6	U	6	U	5	U	5	U
1,1-DICHLOROETHANE	UG/KG	VOA	10	U	6	U	6	U	5	U	5	U
1,1-DICHLOROETHENE	UG/KG	VOA	10	U	6	U	6	U	5	U	5	U
1,2-DICHLOROETHANE	UG/KG	VOA	10	U	6	U	6	U	5	U	5	U
1,2-DICHLOROETHENE (TOTAL)	UG/KG	VOA	10	U	6	U	6	U	5	U	5	U
1,2-DICHLOROPROPANE	UG/KG	VOA	10	U	6	U	6	U	5	U	5	U
2-BUTANONE	UG/KG	VOA	83		14		12		11	U	11	U
2-HEXANONE	UG/KG	VOA	20	U	12	U	12	U	11	U	11	U
4-METHYL-2-PENTANONE	UG/KG	VOA	20	U	12	U	12	U	11	U	11	U
ACETONE	UG/KG	VOA	340	J	91	U	82	U	18	U	11	U
BENZENE	UG/KG	VOA	10	U	6	U	6	U	5	U	5	U
BROMODICHLOROMETHANE	UG/KG	VOA	10	U	6	U	6	U	5	U	5	U
BROMOFORM	UG/KG	VOA	10	U	6	U	6	U	5	U	5	U
BROMOMETHANE	UG/KG	VOA	20	U	12	U	12	U	11	U	11	U
CARBON DISULFIDE	UG/KG	VOA	5	J	3	J	18		5	U	5	U
CARBON TETRACHLORIDE	UG/KG	VOA	10	U	6	U	6	U	5	U	5	U
CHLOROBENZENE	UG/KG	VOA	10	U	6	U	6	U	5	U	5	U
CHLOROETHANE	UG/KG	VOA	20	U	12	U	12	U	11	U	11	U
CHLOROFORM	UG/KG	VOA	10	U	6	U	6	U	5	U	5	U
CHLOROMETHANE	UG/KG	VOA	20	U	12	U	12	U	11	U	11	U
CIS-1,3-DICHLOROPROPENE	UG/KG	VOA	10	U	6	U	6	U	5	U	5	U
DIBROMOCHLOROMETHANE	UG/KG	VOA	10	U	6	U	6	U	5	U	5	U
ETHYLBENZENE	UG/KG	VOA	10	U	6	U	6	U	5	U	5	U
METHYLENE CHLORIDE	UG/KG	VOA	22	U	18	U	12	U	9	U	12	U
STYRENE	UG/KG	VOA	10	U	6	U	6	U	5	U	5	U
TETRACHLOROETHENE	UG/KG	VOA	10	U	6	U	6	U	5	U	5	U
TOLUENE	UG/KG	VOA	5	J	2	J	6	U	5	U	5	U
TRANS-1,3-DICHLOROPROPENE	UG/KG	VOA	10	U	6	U	6	U	5	U	5	U
TRICHLOROETHENE	UG/KG	VOA	10	U	6	U	1	J	5	U	5	U
VINYL ACETATE	UG/KG	VOA	20	U	12	U	12	U	11	U	11	U
VINYL CHLORIDE	UG/KG	VOA	20	U	12	U	12	U	11	U	11	U
XYLENES (TOTAL)	UG/KG	VOA	59		18		15		5	U	5	U

NAVSTA-SAN DIEGO
SITE 7 SOILS

		SAMPLE NUMBER:	NS7-BH3-S03-14		NS7-BH3-S04-18		NS7-BH4-S01-5		NS7-BH4-S02-10		NS7-BH4-S03-15	
		SAMPLING DATE:	01/22/91		01/22/91		01/23/91		01/23/91		01/23/91	
		BORING:	BH3		BH3		BH4		BH4		BH4	
		SITE:	NS7		NS7		NS7		NS7		NS7	
		DEPTH:	14		18		5		10		15	
COMPOUND NAME	UNITS	TEST CODE	RESULT	QUALIFIER	RESULT	QUALIFIER	RESULT	QUALIFIER	RESULT	QUALIFIER	RESULT	QUALIFIER
1,2,4-TRICHLOROBENZENE	UG/KG	BNA	360	U	420	U	390	U	380	U	370	U
1,2-DICHLOROBENZENE	UG/KG	BNA	360	U	420	U	390	U	380	U	370	U
1,3-DICHLOROBENZENE	UG/KG	BNA	360	U	420	U	390	U	380	U	370	U
1,4-DICHLOROBENZENE	UG/KG	BNA	360	U	420	U	390	U	57	J	77	J
2,4,5-TRICHLOROPHENOL	UG/KG	BNA	1800	U	2000	U	1900	U	1900	U	1800	U
2,4,6-TRICHLOROPHENOL	UG/KG	BNA	360	U	420	U	390	U	380	U	370	U
2,4-DICHLOROPHENOL	UG/KG	BNA	360	U	420	U	390	U	380	U	370	U
2,4-DIMETHYLPHENOL	UG/KG	BNA	360	U	420	U	390	U	380	U	370	U
2,4-DINITROPHENOL	UG/KG	BNA	1800	U	2000	U	1900	U	1900	U	1800	U
2,4-DINITROTOLUENE	UG/KG	BNA	360	U	420	U	390	U	380	U	370	U
2,6-DINITROTOLUENE	UG/KG	BNA	360	U	420	U	390	U	380	U	370	U
2-CHLORONAPHTHALENE	UG/KG	BNA	360	U	420	U	390	U	380	U	370	U
2-CHLOROPHENOL	UG/KG	BNA	360	U	420	U	390	U	380	U	370	U
2-METHYLNAPHTHALENE	UG/KG	BNA	360	U	420	U	390	U	180	J	46	J
2-METHYLPHENOL	UG/KG	BNA	360	U	420	U	390	U	380	U	370	U
2-NITROANILINE	UG/KG	BNA	1800	U	2000	U	1900	U	1900	U	1800	U
2-NITROPHENOL	UG/KG	BNA	360	U	420	U	390	U	380	U	370	U
3,3'-DICHLOROBENZIDINE	UG/KG	BNA	730	U	840	U	790	U	770	U	750	U
3-NITROANILINE	UG/KG	BNA	1800	U	2000	U	1900	U	1900	U	1800	U
4,6-DINITRO-2-METHYLPHENOL	UG/KG	BNA	1800	U	2000	U	1900	U	1900	U	1800	U
4-BROMOPHENYL-PHENYLETHER	UG/KG	BNA	360	U	420	U	390	U	380	U	370	U
4-CHLORO-3-METHYLPHENOL	UG/KG	BNA	360	U	420	U	390	U	380	U	370	U
4-CHLOROANILINE	UG/KG	BNA	360	U	420	U	530		610		1000	
4-CHLOROPHENYL-PHENYLETHER	UG/KG	BNA	360	U	420	U	390	U	380	U	370	U
4-METHYLPHENOL	UG/KG	BNA	360	U	420	U	390	U	380	U	370	U
4-NITROANILINE	UG/KG	BNA	1800	U	2000	U	1900	U	1900	U	1800	U
4-NITROPHENOL	UG/KG	BNA	1800	U	2000	U	1900	U	1900	U	1800	U
ACENAPHTHENE	UG/KG	BNA	360	U	420	U	390	U	48	J	83	J
ACENAPHTHYLENE	UG/KG	BNA	360	U	420	U	390	U	380	U	370	U
ANTHRACENE	UG/KG	BNA	360	U	420	U	390	U	380	U	62	J
BENZO(A)ANTHRACENE	UG/KG	BNA	360	U	420	U	390	U	380	U	370	U
BENZO(A)PYRENE	UG/KG	BNA	360	U	420	U	390	U	60	J	100	J
BENZO(B)FLUORANTHENE	UG/KG	BNA	360	U	420	U	390	U	120	J	230	J
BENZO(G,H,I)PERYLENE	UG/KG	BNA	360	U	420	U	390	U	380	U	370	U
BENZO(K)FLUORANTHENE	UG/KG	BNA	360	U	420	U	390	U	380	U	370	U
BENZOIC ACID	UG/KG	BNA	1800	U	2000	U	1900	U	1900	U	1800	U
BENZYL ALCOHOL	UG/KG	BNA	360	U	420	U	390	U	380	U	370	U
BIS(2-CHLOROETHOXY)METHANE	UG/KG	BNA	360	U	420	U	390	U	380	U	370	U
BIS(2-CHLOROETHYL)ETHER	UG/KG	BNA	360	U	420	U	390	U	380	U	370	U
BIS(2-CHLOROISOPROPYL)ETHER	UG/KG	BNA	360	U	420	U	390	U	380	U	370	U
BIS(2-ETHYLHEXYL)PHTHALATE	UG/KG	BNA	360	U	83	J	410		1800		2200	
BUTYLBENZYLPHTHALATE	UG/KG	BNA	360	U	420	U	390	U	380	U	370	U
CHRYSENE	UG/KG	BNA	360	U	420	U	390	U	74	J	180	J
DI-N-BUTYLPHTHALATE	UG/KG	BNA	360	U	420	U	390	U	380	U	370	U
DI-N-OCTYLPHTHALATE	UG/KG	BNA	360	U	420	U	390	U	380	U	370	U
DIBENZ(A,H)ANTHRACENE	UG/KG	BNA	360	U	420	U	390	U	380	U	370	U
DIBENZOFURAN	UG/KG	BNA	360	U	420	U	390	U	380	U	370	U
DIETHYLPHTHALATE	UG/KG	BNA	360	U	420	U	390	U	380	U	370	U
DIMETHYLPHTHALATE	UG/KG	BNA	360	U	420	U	390	U	380	U	370	U
FLUORANTHENE	UG/KG	BNA	360	U	420	U	390	U	140	J	340	J
FLUORENE	UG/KG	BNA	360	U	420	U	390	U	380	U	370	U

NAVSTA-SAN DIEGO
SITE 7 SOILS

		SAMPLE NUMBER:	NS7-BH3-S03-14		NS7-BH3-S04-18		NS7-BH4-S01-5		NS7-BH4-S02-10		NS7-BH4-S03-15	
		SAMPLING DATE:	01/22/91		01/22/91		01/23/91		01/23/91		01/23/91	
		BORING:	BH3		BH3		BH4		BH4		BH4	
		SITE:	NS7		NS7		NS7		NS7		NS7	
		DEPTH:	14		18		5		10		15	
COMPOUND NAME	UNITS	TEST CODE	RESULT	QUALIFIER	RESULT	QUALIFIER	RESULT	QUALIFIER	RESULT	QUALIFIER	RESULT	QUALIFIER
HEXACHLOROBENZENE	UG/KG	BNA	360	U	420	U	390	U	380	U	370	U
HEXACHLOROBUTADIENE	UG/KG	BNA	360	U	420	U	390	U	380	U	370	U
HEXACHLOROCYCLOPENTADIENE	UG/KG	BNA	360	U	420	U	390	U	380	U	370	U
HEXACHLOROETHANE	UG/KG	BNA	360	U	420	U	390	U	380	U	370	U
INDENO(1,2,3-C,D)PYRENE	UG/KG	BNA	360	U	420	U	390	U	380	U	370	U
ISOPHORONE	UG/KG	BNA	360	U	420	U	390	U	380	U	370	U
N-NITROSO-DI-N-PROPYLAMINE	UG/KG	BNA	360	U	420	U	390	U	380	U	370	U
N-NITROSODIPHENYLAMINE (1)	UG/KG	BNA	360	U	420	U	390	U	380	U	370	U
NAPHTHALENE	UG/KG	BNA	360	U	420	U	390	U	77	J	100	J
NITROBENZENE	UG/KG	BNA	360	U	420	U	390	U	380	U	370	U
PENTACHLOROPHENOL	UG/KG	BNA	1800	U	2000	U	1900	U	1900	U	1800	U
PHENANTHRENE	UG/KG	BNA	360	U	420	U	390	U	150	J	320	J
PHENOL	UG/KG	BNA	360	U	420	U	390	U	380	U	370	U
PYRENE	UG/KG	BNA	360	U	420	U	59	J	130	J	320	J
ANTIMONY	UG/KG	CAC METALS	4.7	B	4.8	U	4.3	U	4.0	U	4.2	U
ARSENIC	UG/KG	CAC METALS	1.3	B	2.7		3.1		2.0	U	2.5	
BARIUM	UG/KG	CAC METALS	141		130		188		104		85.9	
BERYLLIUM	UG/KG	CAC METALS	0.22	U	0.25	U	0.23	U	0.22	U	0.22	U
CADMIUM	UG/KG	CAC METALS	0.87	U	1.0	U	4.2		0.86	U	0.89	U
CHROMIUM	UG/KG	CAC METALS	9.0		24.3		66.0		28.3		23.6	
COBALT	UG/KG	CAC METALS	5.5	B	14.1		8.9	B	7.2	B	7.0	B
COPPER	UG/KG	CAC METALS	7.0		22.5		87.4		29.8	U	23.1	U
LEAD	UG/KG	CAC METALS	3.0		5.4		64.5		25.8		29.6	
MERCURY	UG/KG	CAC METALS	0.16	U	0.19	U	1.8		0.47		0.17	U
MOLYBDENUM	UG/KG	CAC METALS	1.5	U	1.8	U	1.6	U	1.9	B	1.5	U
NICKEL	UG/KG	CAC METALS	2.0	U	7.7	B	20.2		8.1	B	5.9	B
SELENIUM	UG/KG	CAC METALS	0.41	U	0.50	U	0.45	U	0.44	U	0.45	U
SILVER	UG/KG	CAC METALS	0.65	U	1.2	B	15.0		4.8		3.7	U
THALLIUM	UG/KG	CAC METALS	0.41	U	0.50	U	0.45	U	0.44	U	0.45	U
VANADIUM	UG/KG	CAC METALS	42.6		85.0		54.9		54.7		52.7	
ZINC	UG/KG	CAC METALS	19.8		57.0		228	U	89.5	U	66.4	U
CAC WET EXTRACTION	DATE	CAC WET EX										
LEAD	MG/L	CAC WET EX					0.014	U				
TOTAL CYANIDE	MG/L	CN										
TOTAL CYANIDE	UG/KG	CN	1	U	1	U	1	U	1	U	1	U
4,4'-DDD	UG/KG	PEST / PCB	18	U	20	U	19	U	19	U	18	U
4,4'-DDE	UG/KG	PEST / PCB	18	U	20	U	26		36		45	
4,4'-DDT	UG/KG	PEST / PCB	18	U	20	U	19	U	19	U	18	U
ALDRIN	UG/KG	PEST / PCB	8.8	U	10	U	9.5	U	9.3	U	9.1	U
ALPHA-BHC	UG/KG	PEST / PCB	8.8	U	10	U	9.5	U	9.3	U	9.1	U
ALPHA-CHLORDANE	UG/KG	PEST / PCB	88	U	100	U	95	U	93	U	91	U
BETA-BHC	UG/KG	PEST / PCB	8.8	U	10	U	9.5	U	9.3	U	9.1	U
DELTA-BHC	UG/KG	PEST / PCB	8.8	U	10	U	9.5	U	9.3	U	9.1	U
DIELDRIN	UG/KG	PEST / PCB	18	U	20	U	19	U	19	U	18	U
ENDOSULFAN I	UG/KG	PEST / PCB	8.8	U	10	U	9.5	U	9.3	U	9.1	U
ENDOSULFAN II	UG/KG	PEST / PCB	18	U	20	U	19	U	19	U	18	U
ENDOSULFAN SULFATE	UG/KG	PEST / PCB	18	U	20	U	19	U	19	U	18	U
ENDRIN	UG/KG	PEST / PCB	18	U	20	U	19	U	19	U	18	U
ENDRIN KETONE	UG/KG	PEST / PCB	18	U	20	U	19	U	19	U	18	U
GAMMA-BHC (LINDANE)	UG/KG	PEST / PCB	8.8	U	10	U	9.5	U	9.3	U	9.1	U
GAMMA-CHLORDANE	UG/KG	PEST / PCB	88	U	100	U	95	U	93	U	91	U

NAVSTA-SAN DIEGO
SITE 7 SOILS

		SAMPLE NUMBER:	NS7-BH3-S03-14		NS7-BH3-S04-18		NS7-BH4-S01-5		NS7-BH4-S02-10		NS7-BH4-S03-15	
		SAMPLING DATE:	01/22/91		01/22/91		01/23/91		01/23/91		01/23/91	
		BORING:	BH3		BH3		BH4		BH4		BH4	
		SITE:	NS7		NS7		NS7		NS7		NS7	
		DEPTH:	14		18		5		10		15	
COMPOUND NAME	UNITS	TEST CODE	RESULT	QUALIFIER	RESULT	QUALIFIER	RESULT	QUALIFIER	RESULT	QUALIFIER	RESULT	QUALIFIER
HEPTACHLOR	UG/KG	PEST / PCB	8.8	U	10	U	9.5	U	9.3	U	9.1	U
HEPTACHLOR EPOXIDE	UG/KG	PEST / PCB	8.8	U	10	U	9.5	U	9.3	U	9.1	U
METHOXYCHLOR	UG/KG	PEST / PCB	88	U	100	U	95	U	93	U	91	U
PCB-1016	UG/KG	PEST / PCB	88	U	100	U	95	U	93	U	91	U
PCB-1221	UG/KG	PEST / PCB	88	U	100	U	95	U	93	U	91	U
PCB-1232	UG/KG	PEST / PCB	88	U	100	U	95	U	93	U	91	U
PCB-1242	UG/KG	PEST / PCB	88	U	100	U	95	U	93	U	91	U
PCB-1248	UG/KG	PEST / PCB	88	U	100	U	95	U	93	U	91	U
PCB-1254	UG/KG	PEST / PCB	180	U	200	U	380		260		380	
PCB-1260	UG/KG	PEST / PCB	180	U	200	U	190	U	190	U	180	U
TOXAPHENE	UG/KG	PEST / PCB	180	U	200	U	190	U	190	U	180	U
1,1,1-TRICHLOROETHANE	UG/KG	VOA	5	U	6	U	6	U	6	U	6	U
1,1,2,2-TETRACHLOROETHANE	UG/KG	VOA	5	U	6	U	6	U	6	U	6	U
1,1,2-TRICHLOROETHANE	UG/KG	VOA	5	U	6	U	6	U	6	U	6	U
1,1-DICHLOROETHANE	UG/KG	VOA	5	U	6	U	6	U	6	U	6	U
1,1-DICHLOROETHENE	UG/KG	VOA	5	U	6	U	6	U	6	U	6	U
1,2-DICHLOROETHANE	UG/KG	VOA	5	U	6	U	6	U	6	U	6	U
1,2-DICHLOROETHENE (TOTAL)	UG/KG	VOA	5	U	6	U	6	U	6	U	6	U
1,2-DICHLOROPROPANE	UG/KG	VOA	5	U	6	U	6	U	6	U	6	U
2-BUTANONE	UG/KG	VOA	11	U	13	U	12	U	12	U	11	U
2-HEXANONE	UG/KG	VOA	11	U	13	U	12	U	12	U	11	U
4-METHYL-2-PENTANONE	UG/KG	VOA	11	U	13	U	12	U	12	U	11	U
ACETONE	UG/KG	VOA	11	U	13	U	12	U	35	U	29	U
BENZENE	UG/KG	VOA	5	U	6	U	6	U	6	U	6	U
BROMODICHLOROMETHANE	UG/KG	VOA	5	U	6	U	6	U	6	U	6	U
BROMOFORM	UG/KG	VOA	5	U	6	U	6	U	6	U	6	U
BROMOMETHANE	UG/KG	VOA	11	U	13	U	12	U	12	U	11	U
CARBON DISULFIDE	UG/KG	VOA	5	U	6	U	6	U	6	U	6	U
CARBON TETRACHLORIDE	UG/KG	VOA	5	U	6	U	6	U	6	U	6	U
CHLOROBENZENE	UG/KG	VOA	5	U	6	U	6	U	6	U	6	U
CHLOROETHANE	UG/KG	VOA	11	U	13	U	12	U	12	U	11	U
CHLOROFORM	UG/KG	VOA	5	U	6	U	6	U	6	U	6	U
CHLOROMETHANE	UG/KG	VOA	11	U	13	U	12	U	12	U	11	U
CIS-1,3-DICHLOROPROPENE	UG/KG	VOA	5	U	6	U	6	U	6	U	6	U
DIBROMOCHLOROMETHANE	UG/KG	VOA	5	U	6	U	6	U	6	U	6	U
ETHYLBENZENE	UG/KG	VOA	5	U	6	U	6	U	6	U	6	U
METHYLENE CHLORIDE	UG/KG	VOA	10	U	12	U	15	U	8	U	10	U
STYRENE	UG/KG	VOA	5	U	6	U	6	U	6	U	6	U
TETRACHLOROETHENE	UG/KG	VOA	5	U	6	U	6	U	6	U	6	U
TOLUENE	UG/KG	VOA	5	U	6	U	6	U	6	U	6	U
TRANS-1,3-DICHLOROPROPENE	UG/KG	VOA	5	U	6	U	6	U	6	U	6	U
TRICHLOROETHENE	UG/KG	VOA	5	U	6	U	6	U	6	U	6	U
VINYL ACETATE	UG/KG	VOA	11	U	13	U	12	U	12	U	11	U
VINYL CHLORIDE	UG/KG	VOA	11	U	13	U	12	U	12	U	11	U
XYLENES (TOTAL)	UG/KG	VOA	5	U	6	U	6	U	6	U	5	J

NAVSTA-SAN DIEGO
SITE 7 SOILS

		SAMPLE NUMBER:	NS7-BH4-S04-20		NS7-BH5-S01-5		NS7-BH5-S02-10		NS7-BH5-S02-10 FD		NS7-BH5-S03-15	
		SAMPLING DATE:	01/23/91		01/22/91		01/22/91		01/22/91		01/22/91	
		BORING:	BH4		BH5		BH5		BH5		BH5	
		SITE:	NS7		NS7		NS7		NS7		NS7	
		DEPTH:	20		5		10		10 FD		15	
COMPOUND NAME	UNITS	TEST CODE	RESULT	QUALIFIER	RESULT	QUALIFIER	RESULT	QUALIFIER	RESULT	QUALIFIER	RESULT	QUALIFIER
1,2,4-TRICHLOROBENZENE	UG/KG	BNA	380	U	370	U	360	U	370	U	410	U
1,2-DICHLOROBENZENE	UG/KG	BNA	380	U	370	U	360	U	370	U	410	U
1,3-DICHLOROBENZENE	UG/KG	BNA	380	U	370	U	360	U	370	U	410	U
1,4-DICHLOROBENZENE	UG/KG	BNA	380	U	370	U	360	U	370	U	410	U
2,4,5-TRICHLOROPHENOL	UG/KG	BNA	1800	U	1800	U	1800	U	1800	U	2000	U
2,4,6-TRICHLOROPHENOL	UG/KG	BNA	380	U	370	U	360	U	370	U	410	U
2,4-DICHLOROPHENOL	UG/KG	BNA	380	U	370	U	360	U	370	U	410	U
2,4-DIMETHYLPHENOL	UG/KG	BNA	380	U	370	U	360	U	370	U	410	U
2,4-DINITROPHENOL	UG/KG	BNA	1800	U	1800	U	1800	U	1800	U	2000	U
2,4-DINITROTOLUENE	UG/KG	BNA	380	U	370	U	360	U	370	U	410	U
2,6-DINITROTOLUENE	UG/KG	BNA	380	U	370	U	360	U	370	U	410	U
2-CHLORONAPHTHALENE	UG/KG	BNA	380	U	370	U	360	U	370	U	410	U
2-CHLOROPHENOL	UG/KG	BNA	380	U	370	U	360	U	370	U	410	U
2-METHYLNAPHTHALENE	UG/KG	BNA	380	U	370	U	360	U	370	U	410	U
2-METHYLPHENOL	UG/KG	BNA	380	U	370	U	360	U	370	U	410	U
2-NITROANILINE	UG/KG	BNA	1800	U	1800	U	1800	U	1800	U	2000	U
2-NITROPHENOL	UG/KG	BNA	380	U	370	U	360	U	370	U	410	U
3,3'-DICHLOROBENZIDINE	UG/KG	BNA	760	U	750	U	730	U	730	U	820	U
3-NITROANILINE	UG/KG	BNA	1800	U	1800	U	1800	U	1800	U	2000	U
4,6-DINITRO-2-METHYLPHENOL	UG/KG	BNA	1800	U	1800	U	1800	U	1800	U	2000	U
4-BROMOPHENYL-PHENYLETHER	UG/KG	BNA	380	U	370	U	360	U	370	U	410	U
4-CHLORO-3-METHYLPHENOL	UG/KG	BNA	380	U	370	U	360	U	370	U	410	U
4-CHLOROANILINE	UG/KG	BNA	380	U	100	J	360	U	370	U	410	U
4-CHLOROPHENYL-PHENYLETHER	UG/KG	BNA	380	U	370	U	360	U	370	U	410	U
4-METHYLPHENOL	UG/KG	BNA	380	U	370	U	360	U	370	U	410	U
4-NITROANILINE	UG/KG	BNA	1800	U	1800	U	1800	U	1800	U	2000	U
4-NITROPHENOL	UG/KG	BNA	1800	U	1800	U	1800	U	1800	U	2000	U
ACENAPHTHENE	UG/KG	BNA	380	U	370	U	360	U	370	U	410	U
ACENAPHTHYLENE	UG/KG	BNA	380	U	370	U	360	U	370	U	410	U
ANTHRACENE	UG/KG	BNA	380	U	370	U	360	U	370	U	410	U
BENZO(A)ANTHRACENE	UG/KG	BNA	380	U	370	U	360	U	370	U	410	U
BENZO(A)PYRENE	UG/KG	BNA	380	U	370	U	360	U	370	U	410	U
BENZO(B)FLUORANTHENE	UG/KG	BNA	380	U	370	U	360	U	370	U	410	U
BENZO(G,H,I)PERYLENE	UG/KG	BNA	380	U	370	U	360	U	370	U	410	U
BENZO(K)FLUORANTHENE	UG/KG	BNA	380	U	370	U	360	U	370	U	410	U
BENZOIC ACID	UG/KG	BNA	1800	U	1800	U	1800	U	1800	U	2000	U
BENZYL ALCOHOL	UG/KG	BNA	380	U	370	U	360	U	370	U	410	U
BIS(2-CHLOROETHOXY)METHANE	UG/KG	BNA	380	U	370	U	360	U	370	U	410	U
BIS(2-CHLOROETHYL)ETHER	UG/KG	BNA	380	U	370	U	360	U	370	U	410	U
BIS(2-CHLOROISOPROPYL)ETHER	UG/KG	BNA	380	U	370	U	360	U	370	U	410	U
BIS(2-ETHYLHEXYL)PHTHALATE	UG/KG	BNA	380	U	370	U	87	J	180	J	410	U
BUTYLBENZYLPHTHALATE	UG/KG	BNA	380	U	370	U	360	U	370	U	410	U
CHRYSENE	UG/KG	BNA	380	U	370	U	360	U	370	U	410	U
DI-N-BUTYLPHTHALATE	UG/KG	BNA	380	U	370	U	360	U	370	U	410	U
DI-N-OCTYLPHTHALATE	UG/KG	BNA	380	U	370	U	360	U	370	U	410	U
DIBENZ(A,H)ANTHRACENE	UG/KG	BNA	380	U	370	U	360	U	370	U	410	U
DIBENZOFURAN	UG/KG	BNA	380	U	370	U	360	U	370	U	410	U
DIETHYLPHTHALATE	UG/KG	BNA	380	U	370	U	160	J	370	U	500	
DIMETHYLPHTHALATE	UG/KG	BNA	380	U	370	U	360	U	370	U	410	U
FLUORANTHENE	UG/KG	BNA	380	U	370	U	360	U	370	U	410	U
FLUORENE	UG/KG	BNA	380	U	370	U	360	U	370	U	410	U

NAVSTA-SAN DIEGO
SITE 7 SOILS

		SAMPLE NUMBER:	NS7-BH4-S04-20		NS7-BH5-S01-5		NS7-BH5-S02-10		NS7-BH5-S02-10 FD		NS7-BH5-S03-15	
		SAMPLING DATE:	01/23/91		01/22/91		01/22/91		01/22/91		01/22/91	
		BORING:	BH4		BH5		BH5		BH5		BH5	
		SITE:	NS7		NS7		NS7		NS7		NS7	
		DEPTH:	20		5		10		10 FD		15	
COMPOUND NAME	UNITS	TEST CODE	RESULT	QUALIFIER	RESULT	QUALIFIER	RESULT	QUALIFIER	RESULT	QUALIFIER	RESULT	QUALIFIER
HEXACHLOROBENZENE	UG/KG	BNA	380	U	370	U	360	U	370	U	410	U
HEXACHLOROBUTADIENE	UG/KG	BNA	380	U	370	U	360	U	370	U	410	U
HEXACHLOROCYCLOPENTADIENE	UG/KG	BNA	380	U	370	U	360	U	370	U	410	U
HEXACHLOROETHANE	UG/KG	BNA	380	U	370	U	360	U	370	U	410	U
INDENO(1,2,3-C,D)PYRENE	UG/KG	BNA	380	U	370	U	360	U	370	U	410	U
ISOPHORONE	UG/KG	BNA	380	U	370	U	360	U	370	U	410	U
N-NITROSO-DI-N-PROPYLAMINE	UG/KG	BNA	380	U	370	U	360	U	370	U	410	U
N-NITROSODIPHENYLAMINE (1)	UG/KG	BNA	380	U	370	U	360	U	370	U	410	U
NAPHTHALENE	UG/KG	BNA	380	U	370	U	360	U	370	U	410	U
NITROBENZENE	UG/KG	BNA	380	U	370	U	360	U	370	U	410	U
PENTACHLOROPHENOL	UG/KG	BNA	1800	U	1800	U	1800	U	1800	U	2000	U
PHENANTHRENE	UG/KG	BNA	380	U	370	U	360	U	370	U	410	U
PHENOL	UG/KG	BNA	380	U	370	U	360	U	370	U	410	U
PYRENE	UG/KG	BNA	380	U	370	U	360	U	370	U	410	U
ANTIMONY	UG/KG	CAC METALS	4.3	U	4.0	U	4.0	U	4.5	B	4.5	U
ARSENIC	UG/KG	CAC METALS	3.5		4.0		1.2	B	1.4	B	0.67	B
BARIUM	UG/KG	CAC METALS	67.4		118		29.3	B	24.8	B	24.8	B
BERYLLIUM	UG/KG	CAC METALS	0.22	U	0.22	U	0.22	U	0.21	U	0.24	U
CADMIUM	UG/KG	CAC METALS	0.90	U	0.87	U	0.87	U	0.86	U	0.95	U
CHROMIUM	UG/KG	CAC METALS	16.4		22.3		11.6		13.1		6.9	
COBALT	UG/KG	CAC METALS	11.5		8.1	B	5.7	B	6.8	B	4.4	B
COPPER	UG/KG	CAC METALS	12.9	U	24.3		14.1		6.9		4.4	B
LEAD	UG/KG	CAC METALS	11.7	U	25.8		2.7		3.0		3.6	
MERCURY	UG/KG	CAC METALS	0.17	U	1.3		0.17	U	0.17	U	0.19	U
MOLYBDENUM	UG/KG	CAC METALS	1.6	U	1.5	U	1.5	U	1.5	U	1.7	U
NICKEL	UG/KG	CAC METALS	6.5	B	8.1	B	2.0	B	1.9	U	2.7	B
SELENIUM	UG/KG	CAC METALS	0.43	U	0.45	U	0.43	U	0.41	U	0.49	U
SILVER	UG/KG	CAC METALS	0.75	U	2.4		0.65	U	0.64	U	0.71	U
THALLIUM	UG/KG	CAC METALS	0.43	U	0.45	U	0.43	U	0.41	U	0.49	U
VANADIUM	UG/KG	CAC METALS	53.8		48.5		46.9		49.7		21.2	
ZINC	UG/KG	CAC METALS	47.1	U	69.4		19.2		18.3		17.2	
CAC WET EXTRACTION	DATE	CAC WET EX										
LEAD	MG/L	CAC WET EX										
TOTAL CYANIDE	MG/L	CN										
TOTAL CYANIDE	UG/KG	CN	1	U	1		1	U	1	U	1	U
4,4'-DDD	UG/KG	PEST / PCB	18	U	18	U	18	U	18	U	20	U
4,4'-DDE	UG/KG	PEST / PCB	18	U	18	U	18	U	18	U	20	U
4,4'-DDT	UG/KG	PEST / PCB	18	U	18	U	18	U	18	U	20	U
ALDRIN	UG/KG	PEST / PCB	9.2	U	9.1	U	8.8	U	8.9	U	10	U
ALPHA-BHC	UG/KG	PEST / PCB	9.2	U	9.1	U	8.8	U	8.9	U	10	U
ALPHA-CHLORDANE	UG/KG	PEST / PCB	92	U	91	U	88	U	89	U	100	U
BETA-BHC	UG/KG	PEST / PCB	9.2	U	9.1	U	8.8	U	8.9	U	10	U
DELTA-BHC	UG/KG	PEST / PCB	9.2	U	9.1	U	8.8	U	8.9	U	10	U
DIELDRIN	UG/KG	PEST / PCB	18	U	18	U	18	U	18	U	20	U
ENDOSULFAN I	UG/KG	PEST / PCB	9.2	U	9.1	U	8.8	U	8.9	U	10	U
ENDOSULFAN II	UG/KG	PEST / PCB	18	U	18	U	18	U	18	U	20	U
ENDOSULFAN SULFATE	UG/KG	PEST / PCB	18	U	18	U	18	U	18	U	20	U
ENDRIN	UG/KG	PEST / PCB	18	U	18	U	18	U	18	U	20	U
ENDRIN KETONE	UG/KG	PEST / PCB	18	U	18	U	18	U	18	U	20	U
GAMMA-BHC (LINDANE)	UG/KG	PEST / PCB	9.2	U	9.1	U	8.8	U	8.9	U	10	U
GAMMA-CHLORDANE	UG/KG	PEST / PCB	92	U	91	U	88	U	89	U	100	U

NAVSTA-SAN DIEGO
SITE 7 SOILS

		SAMPLE NUMBER:	NS7-BH4-S04-20		NS7-BH5-S01-5		NS7-BH5-S02-10		NS7-BH5-S02-10 FD		NS7-BH5-S03-15	
		SAMPLING DATE:	01/23/91		01/22/91		01/22/91		01/22/91		01/22/91	
		BORING:	BH4		BH5		BH5		BH5		BH5	
		SITE:	NS7		NS7		NS7		NS7		NS7	
		DEPTH:	20		5		10		10 FD		15	
COMPOUND NAME	UNITS	TEST CODE	RESULT	QUALIFIER	RESULT	QUALIFIER	RESULT	QUALIFIER	RESULT	QUALIFIER	RESULT	QUALIFIER
HEPTACHLOR	UG/KG	PEST / PCB	9.2	U	9.1	U	8.8	U	8.9	U	10	U
HEPTACHLOR EPOXIDE	UG/KG	PEST / PCB	9.2	U	9.1	U	8.8	U	8.9	U	10	U
METHOXYCHLOR	UG/KG	PEST / PCB	92	U	91	U	88	U	89	U	100	U
PCB-1016	UG/KG	PEST / PCB	92	U	91	U	88	U	89	U	100	U
PCB-1221	UG/KG	PEST / PCB	92	U	91	U	88	U	89	U	100	U
PCB-1232	UG/KG	PEST / PCB	92	U	91	U	88	U	89	U	100	U
PCB-1242	UG/KG	PEST / PCB	92	U	91	U	88	U	89	U	100	U
PCB-1248	UG/KG	PEST / PCB	92	U	91	U	88	U	89	U	100	U
PCB-1254	UG/KG	PEST / PCB	180	U	180	U	180	U	180	U	200	U
PCB-1260	UG/KG	PEST / PCB	180	U	180	U	180	U	180	U	200	U
TOXAPHENE	UG/KG	PEST / PCB	180	U	180	U	180	U	180	U	200	U
1,1,1-TRICHLOROETHANE	UG/KG	VOA	6	U	6	U	5	U	6	U	6	U
1,1,2,2-TETRACHLOROETHANE	UG/KG	VOA	6	U	6	U	5	U	6	U	6	U
1,1,2-TRICHLOROETHANE	UG/KG	VOA	6	U	6	U	5	U	6	U	6	U
1,1-DICHLOROETHANE	UG/KG	VOA	6	U	6	U	5	U	6	U	6	U
1,1-DICHLOROETHENE	UG/KG	VOA	6	U	6	U	5	U	6	U	6	U
1,2-DICHLOROETHANE	UG/KG	VOA	6	U	6	U	5	U	6	U	6	U
1,2-DICHLOROETHENE (TOTAL)	UG/KG	VOA	6	U	6	U	5	U	6	U	6	U
1,2-DICHLOROPROPANE	UG/KG	VOA	6	U	6	U	5	U	6	U	6	U
2-BUTANONE	UG/KG	VOA	11	U	11	U	11	U	11	U	12	U
2-HEXANONE	UG/KG	VOA	11	U	11	U	11	U	11	U	12	U
4-METHYL-2-PENTANONE	UG/KG	VOA	11	U	11	U	11	U	11	U	12	U
ACETONE	UG/KG	VOA	11	U	11	U	11	U	11	U	16	U
BENZENE	UG/KG	VOA	6	U	6	U	5	U	6	U	6	U
BROMODICHLOROMETHANE	UG/KG	VOA	6	U	6	U	5	U	6	U	6	U
BROMOFORM	UG/KG	VOA	6	U	6	U	5	U	6	U	6	U
BROMOMETHANE	UG/KG	VOA	11	U	11	U	11	U	11	U	12	U
CARBON DISULFIDE	UG/KG	VOA	6	U	6	U	5	U	6	U	6	U
CARBON TETRACHLORIDE	UG/KG	VOA	6	U	6	U	5	U	6	U	6	U
CHLOROBENZENE	UG/KG	VOA	6	U	6	U	5	U	6	U	6	U
CHLOROETHANE	UG/KG	VOA	11	U	11	U	11	U	11	U	12	U
CHLOROFORM	UG/KG	VOA	6	U	6	U	5	U	6	U	6	U
CHLOROMETHANE	UG/KG	VOA	11	U	11	U	11	U	11	U	12	U
CIS-1,3-DICHLOROPROPENE	UG/KG	VOA	6	U	6	U	5	U	6	U	6	U
DIBROMOCHLOROMETHANE	UG/KG	VOA	6	U	6	U	5	U	6	U	6	U
ETHYLBENZENE	UG/KG	VOA	6	U	6	U	5	U	6	U	6	U
METHYLENE CHLORIDE	UG/KG	VOA	8	U	9	U	34	U	18	U	22	U
STYRENE	UG/KG	VOA	6	U	6	U	5	U	6	U	6	U
TETRACHLOROETHENE	UG/KG	VOA	6	U	6	U	5	U	6	U	6	U
TOLUENE	UG/KG	VOA	6	U	6	U	5	U	6	U	6	U
TRANS-1,3-DICHLOROPROPENE	UG/KG	VOA	6	U	6	U	5	U	6	U	6	U
TRICHLOROETHENE	UG/KG	VOA	6	U	6	U	5	U	6	U	6	U
VINYL ACETATE	UG/KG	VOA	11	U	11	U	11	U	11	U	12	U
VINYL CHLORIDE	UG/KG	VOA	11	U	11	U	11	U	11	U	12	U
XYLENES (TOTAL)	UG/KG	VOA	6	U	6	U	5	U	6	U	6	U

NAVSTA-SAN DIEGO
SITE 7 SOILS

		SAMPLE NUMBER:	NS7-BH5-S04-20		NS7-MW1-S01-5		NS7-MW1-S02-10		NS7-MW1-S03-15		NS7-MW1-S04-15FD	
		SAMPLING DATE:	01/22/91		01/23/91		01/23/91		01/23/91		01/23/91	
		BORING:	BH5		MW1		MW1		MW1		MW1	
		SITE:	NS7		NS7		NS7		NS7		NS7	
		DEPTH:	20		5		10		15		15FD	
COMPOUND NAME	UNITS	TEST CODE	RESULT	QUALIFIER	RESULT	QUALIFIER	RESULT	QUALIFIER	RESULT	QUALIFIER	RESULT	QUALIFIER
1,2,4-TRICHLOROBENZENE	UG/KG	BNA	390	U	380	U	380	U	340	U	340	U
1,2-DICHLOROBENZENE	UG/KG	BNA	390	U	380	U	380	U	340	U	340	U
1,3-DICHLOROBENZENE	UG/KG	BNA	390	U	380	U	380	U	340	U	340	U
1,4-DICHLOROBENZENE	UG/KG	BNA	390	U	380	U	380	U	340	U	340	U
2,4,5-TRICHLOROPHENOL	UG/KG	BNA	1900	U	1900	U	1900	U	1600	U	1600	U
2,4,6-TRICHLOROPHENOL	UG/KG	BNA	390	U	380	U	380	U	340	U	340	U
2,4-DICHLOROPHENOL	UG/KG	BNA	390	U	380	U	380	U	340	U	340	U
2,4-DIMETHYLPHENOL	UG/KG	BNA	390	U	380	U	380	U	340	U	340	U
2,4-DINITROPHENOL	UG/KG	BNA	1900	U	1900	U	1900	U	1600	U	1600	U
2,4-DINITROTOLUENE	UG/KG	BNA	390	U	380	U	380	U	340	U	340	U
2,6-DINITROTOLUENE	UG/KG	BNA	390	U	380	U	380	U	340	U	340	U
2-CHLORONAPHTHALENE	UG/KG	BNA	390	U	380	U	380	U	340	U	340	U
2-CHLOROPHENOL	UG/KG	BNA	390	U	380	U	380	U	340	U	340	U
2-METHYLNAPHTHALENE	UG/KG	BNA	390	U	380	U	380	U	340	U	340	U
2-METHYLPHENOL	UG/KG	BNA	390	U	380	U	380	U	340	U	340	U
2-NITROANILINE	UG/KG	BNA	1900	U	1900	U	1900	U	1600	U	1600	U
2-NITROPHENOL	UG/KG	BNA	390	U	380	U	380	U	340	U	340	U
3,3'-DICHLOROBENZIDINE	UG/KG	BNA	790	U	770	U	770	U	670	U	670	U
3-NITROANILINE	UG/KG	BNA	1900	U	1900	U	1900	U	1600	U	1600	U
4,6-DINITRO-2-METHYLPHENOL	UG/KG	BNA	1900	U	1900	U	1900	U	1600	U	1600	U
4-BROMOPHENYL-PHENYLETHER	UG/KG	BNA	390	U	380	U	380	U	340	U	340	U
4-CHLORO-3-METHYLPHENOL	UG/KG	BNA	390	U	380	U	380	U	340	U	340	U
4-CHLOROANILINE	UG/KG	BNA	390	U	380	U	380	U	340	U	340	U
4-CHLOROPHENYL-PHENYLETHER	UG/KG	BNA	390	U	380	U	380	U	340	U	340	U
4-METHYLPHENOL	UG/KG	BNA	390	U	380	U	380	U	340	U	340	U
4-NITROANILINE	UG/KG	BNA	1900	U	1900	U	1900	U	1600	U	1600	U
4-NITROPHENOL	UG/KG	BNA	1900	U	1900	U	1900	U	1600	U	1600	U
ACENAPHTHENE	UG/KG	BNA	390	U	380	U	380	U	340	U	340	U
ACENAPHTHYLENE	UG/KG	BNA	390	U	380	U	380	U	340	U	340	U
ANTHRACENE	UG/KG	BNA	390	U	380	U	380	U	340	U	340	U
BENZO(A)ANTHRACENE	UG/KG	BNA	390	U	380	U	380	U	340	U	340	U
BENZO(A)PYRENE	UG/KG	BNA	390	U	380	U	380	U	340	U	340	U
BENZO(B)FLUORANTHENE	UG/KG	BNA	390	U	380	U	380	U	340	U	340	U
BENZO(G,H,I)PERYLENE	UG/KG	BNA	390	U	380	U	380	U	340	U	340	U
BENZO(K)FLUORANTHENE	UG/KG	BNA	390	U	380	U	380	U	340	U	340	U
BENZOIC ACID	UG/KG	BNA	1900	U	1900	U	1900	U	1600	U	1600	U
BENZYL ALCOHOL	UG/KG	BNA	390	U	380	U	380	U	340	U	340	U
BIS(2-CHLOROETHOXY)METHANE	UG/KG	BNA	390	U	380	U	380	U	340	U	340	U
BIS(2-CHLOROETHYL)ETHER	UG/KG	BNA	390	U	380	U	380	U	340	U	340	U
BIS(2-CHLOROISOPROPYL)ETHER	UG/KG	BNA	390	U	380	U	380	U	340	U	340	U
BIS(2-ETHYLHEXYL)PHTHALATE	UG/KG	BNA	46	J	380	U	380	U	340	U	340	U
BUTYLBENZYLPHTHALATE	UG/KG	BNA	390	U	380	U	380	U	340	U	340	U
CHRYSENE	UG/KG	BNA	390	U	380	U	380	U	340	U	340	U
DI-N-BUTYLPHTHALATE	UG/KG	BNA	390	U	380	U	380	U	340	U	340	U
DI-N-OCTYLPHTHALATE	UG/KG	BNA	390	U	380	U	380	U	340	U	340	U
DIBENZ(A,H)ANTHRACENE	UG/KG	BNA	390	U	380	U	380	U	340	U	340	U
DIBENZOFURAN	UG/KG	BNA	390	U	380	U	380	U	340	U	340	U
DIETHYLPHTHALATE	UG/KG	BNA	390	U	380	U	380	U	340	U	340	U
DIMETHYLPHTHALATE	UG/KG	BNA	390	U	380	U	380	U	340	U	340	U
FLUORANTHENE	UG/KG	BNA	390	U	380	U	380	U	340	U	340	U
FLUORENE	UG/KG	BNA	390	U	380	U	380	U	340	U	340	U

NAVSTA-SAN DIEGO
SITE 7 SOILS

		SAMPLE NUMBER:	NS7-BH5-S04-20		NS7-MW1-S01-5		NS7-MW1-S02-10		NS7-MW1-S03-15		NS7-MW1-S04-15FD	
		SAMPLING DATE:	01/22/91		01/23/91		01/23/91		01/23/91		01/23/91	
		BORING:	BH5		MW1		MW1		MW1		MW1	
		SITE:	NS7		NS7		NS7		NS7		NS7	
		DEPTH:	20		5		10		15		15FD	
COMPOUND NAME	UNITS	TEST CODE	RESULT	QUALIFIER	RESULT	QUALIFIER	RESULT	QUALIFIER	RESULT	QUALIFIER	RESULT	QUALIFIER
HEXACHLOROBENZENE	UG/KG	BNA	390	U	380	U	380	U	340	U	340	U
HEXACHLOROBUTADIENE	UG/KG	BNA	390	U	380	U	380	U	340	U	340	U
HEXACHLOROCYCLOPENTADIENE	UG/KG	BNA	390	U	380	U	380	U	340	U	340	U
HEXACHLOROETHANE	UG/KG	BNA	390	U	380	U	380	U	340	U	340	U
INDENO(1,2,3-C,D)PYRENE	UG/KG	BNA	390	U	380	U	380	U	340	U	340	U
ISOPHORONE	UG/KG	BNA	390	U	380	U	380	U	340	U	340	U
N-NITROSO-DI-N-PROPYLAMINE	UG/KG	BNA	390	U	380	U	380	U	340	U	340	U
N-NITROSODIPHENYLAMINE (1)	UG/KG	BNA	390	U	380	U	380	U	340	U	340	U
NAPHTHALENE	UG/KG	BNA	390	U	380	U	380	U	340	U	340	U
NITROBENZENE	UG/KG	BNA	390	U	380	U	380	U	340	U	340	U
PENTACHLOROPHENOL	UG/KG	BNA	1900	U	1900	U	1900	U	1600	U	1600	U
PHENANTHRENE	UG/KG	BNA	390	U	380	U	380	U	340	U	340	U
PHENOL	UG/KG	BNA	390	U	380	U	380	U	340	U	340	U
PYRENE	UG/KG	BNA	390	U	380	U	380	U	340	U	340	U
ANTIMONY	UG/KG	CAC METALS	4.4	U	4.2	U	4.4	U	4.9	B	4.1	B
ARSENIC	UG/KG	CAC METALS	1.0	B	2.5		2.5		0.65	U	0.95	U
BARIUM	UG/KG	CAC METALS	45.4	B	31.1	U	79.5		6.5	U	9.0	U
BERYLLIUM	UG/KG	CAC METALS	0.23	U	0.22	U	0.23	U	0.19	U	0.19	U
CADMIUM	UG/KG	CAC METALS	0.92	U	0.89	U	0.92	U	0.78	U	0.78	U
CHROMIUM	UG/KG	CAC METALS	10.8		18.7		16.7		2.9		2.4	
COBALT	UG/KG	CAC METALS	5.8	B	6.8	B	12.6		1.8	B	2.0	B
COPPER	UG/KG	CAC METALS	6.3		4.9	U	22.1	U	1.2	U	2.1	B
LEAD	UG/KG	CAC METALS	3.9		6.4	U	5.3	U	1.1	U	1.2	U
MERCURY	UG/KG	CAC METALS	0.18	U	0.18	U	0.17	U	0.15	U	0.15	U
MOLYBDENUM	UG/KG	CAC METALS	1.6	U	1.6	U	1.6	U	1.4	U	1.4	U
NICKEL	UG/KG	CAC METALS	3.6	B	5.4	B	9.0	B	1.8	U	1.7	U
SELENIUM	UG/KG	CAC METALS	0.46	U	0.46	U	0.45	U	0.40	U	0.40	U
SILVER	UG/KG	CAC METALS	0.69	U	0.67	U	1.4	U	0.58	U	0.58	U
THALLIUM	UG/KG	CAC METALS	0.46	U	0.46	U	0.45	U	0.40	U	0.40	U
VANADIUM	UG/KG	CAC METALS	26.7		47.1		48.6		10.8		10.1	
ZINC	UG/KG	CAC METALS	24.8		28.2	U	45.4	U	6.5	U	7.2	U
CAC WET EXTRACTION	DATE	CAC WET EX										
LEAD	MG/L	CAC WET EX										
TOTAL CYANIDE	MG/L	CN										
TOTAL CYANIDE	UG/KG	CN	1	U	1	U	1	U	1	U	1	U
4,4'-DDD	UG/KG	PEST / PCB	19	U	19	U	19	U	16	U	16	U
4,4'-DDE	UG/KG	PEST / PCB	19	U	19	U	19	U	16	U	16	U
4,4'-DDT	UG/KG	PEST / PCB	19	U	19	U	19	U	16	U	16	U
ALDRIN	UG/KG	PEST / PCB	9.5	U	9.3	U	9.3	U	8.2	U	8.2	U
ALPHA-BHC	UG/KG	PEST / PCB	9.5	U	9.3	U	9.3	U	8.2	U	8.2	U
ALPHA-CHLORDANE	UG/KG	PEST / PCB	95	U	93	U	93	U	82	U	82	U
BETA-BHC	UG/KG	PEST / PCB	9.5	U	9.3	U	9.3	U	8.2	U	8.2	U
DELTA-BHC	UG/KG	PEST / PCB	9.5	U	9.3	U	9.3	U	8.2	U	8.2	U
DIELDRIN	UG/KG	PEST / PCB	19	U	19	U	19	U	16	U	16	U
ENDOSULFAN I	UG/KG	PEST / PCB	9.5	U	9.3	U	9.3	U	8.2	U	8.2	U
ENDOSULFAN II	UG/KG	PEST / PCB	19	U	19	U	19	U	16	U	16	U
ENDOSULFAN SULFATE	UG/KG	PEST / PCB	19	U	19	U	19	U	16	U	16	U
ENDRIN	UG/KG	PEST / PCB	19	U	19	U	19	U	16	U	16	U
ENDRIN KETONE	UG/KG	PEST / PCB	19	U	19	U	19	U	16	U	16	U
GAMMA-BHC (LINDANE)	UG/KG	PEST / PCB	9.5	U	9.3	U	9.3	U	8.2	U	8.2	U
GAMMA-CHLORDANE	UG/KG	PEST / PCB	95	U	93	U	93	U	82	U	82	U

NAVSTA-SAN DIEGO
SITE 7 SOILS

		SAMPLE NUMBER:	NS7-BH5-S04-20		NS7-MW1-S01-5		NS7-MW1-S02-10		NS7-MW1-S03-15		NS7-MW1-S04-15FD	
		SAMPLING DATE:	01/22/91		01/23/91		01/23/91		01/23/91		01/23/91	
		BORING:	BH5		MW1		MW1		MW1		MW1	
		SITE:	NS7		NS7		NS7		NS7		NS7	
		DEPTH:	20		5		10		15		15FD	
COMPOUND NAME	UNITS	TEST CODE	RESULT	QUALIFIER	RESULT	QUALIFIER	RESULT	QUALIFIER	RESULT	QUALIFIER	RESULT	QUALIFIER
HEPTACHLOR	UG/KG	PEST / PCB	9.5	U	9.3	U	9.3	U	8.2	U	8.2	U
HEPTACHLOR EPOXIDE	UG/KG	PEST / PCB	9.5	U	9.3	U	9.3	U	8.2	U	8.2	U
METHOXYCHLOR	UG/KG	PEST / PCB	95	U	93	U	93	U	82	U	82	U
PCB-1016	UG/KG	PEST / PCB	95	U	93	U	93	U	82	U	82	U
PCB-1221	UG/KG	PEST / PCB	95	U	93	U	93	U	82	U	82	U
PCB-1232	UG/KG	PEST / PCB	95	U	93	U	93	U	82	U	82	U
PCB-1242	UG/KG	PEST / PCB	95	U	93	U	93	U	82	U	82	U
PCB-1248	UG/KG	PEST / PCB	95	U	93	U	93	U	82	U	82	U
PCB-1254	UG/KG	PEST / PCB	190	U	190	U	190	U	160	U	160	U
PCB-1260	UG/KG	PEST / PCB	190	U	190	U	190	U	160	U	160	U
TOXAPHENE	UG/KG	PEST / PCB	190	U	190	U	190	U	160	U	160	U
1,1,1-TRICHLOROETHANE	UG/KG	VOA	6	U	6	U	6	U	5	U	5	U
1,1,2,2-TETRACHLOROETHANE	UG/KG	VOA	6	U	6	U	6	U	5	U	5	U
1,1,2-TRICHLOROETHANE	UG/KG	VOA	6	U	6	U	6	U	5	U	5	U
1,1-DICHLOROETHANE	UG/KG	VOA	6	U	6	U	6	U	5	U	5	U
1,1-DICHLOROETHENE	UG/KG	VOA	6	U	6	U	6	U	5	U	5	U
1,2-DICHLOROETHANE	UG/KG	VOA	6	U	6	U	6	U	5	U	5	U
1,2-DICHLOROETHENE (TOTAL)	UG/KG	VOA	6	U	6	U	6	U	5	U	5	U
1,2-DICHLOROPROPANE	UG/KG	VOA	6	U	6	U	6	U	5	U	5	U
2-BUTANONE	UG/KG	VOA	12	U	12	U	12	U	10	U	10	U
2-HEXANONE	UG/KG	VOA	12	U	12	U	12	U	10	U	10	U
4-METHYL-2-PENTANONE	UG/KG	VOA	12	U	12	U	12	U	10	U	10	U
ACETONE	UG/KG	VOA	56	U	12	U	13	U	16	U	13	U
BENZENE	UG/KG	VOA	6	U	6	U	6	U	5	U	5	U
BROMODICHLOROMETHANE	UG/KG	VOA	6	U	6	U	6	U	5	U	5	U
BROMOFORM	UG/KG	VOA	6	U	6	U	6	U	5	U	5	U
BROMOMETHANE	UG/KG	VOA	12	U	12	U	12	U	10	U	10	U
CARBON DISULFIDE	UG/KG	VOA	6	U	6	U	6	U	5	U	5	U
CARBON TETRACHLORIDE	UG/KG	VOA	6	U	6	U	6	U	5	U	5	U
CHLOROBENZENE	UG/KG	VOA	6	U	6	U	6	U	5	U	5	U
CHLOROETHANE	UG/KG	VOA	12	U	12	U	12	U	10	U	10	U
CHLOROFORM	UG/KG	VOA	6	U	6	U	6	U	5	U	5	U
CHLOROMETHANE	UG/KG	VOA	12	U	12	U	12	U	10	U	10	U
CIS-1,3-DICHLOROPROPENE	UG/KG	VOA	6	U	6	U	6	U	5	U	5	U
DIBROMOCHLOROMETHANE	UG/KG	VOA	6	U	6	U	6	U	5	U	5	U
ETHYLBENZENE	UG/KG	VOA	6	U	6	U	6	U	5	U	5	U
METHYLENE CHLORIDE	UG/KG	VOA	23	U	23	U	18	U	9	U	7	U
STYRENE	UG/KG	VOA	6	U	6	U	6	U	5	U	5	U
TETRACHLOROETHENE	UG/KG	VOA	6	U	6	U	6	U	5	U	5	U
TOLUENE	UG/KG	VOA	6	U	6	U	6	U	5	U	5	U
TRANS-1,3-DICHLOROPROPENE	UG/KG	VOA	6	U	6	U	6	U	5	U	5	U
TRICHLOROETHENE	UG/KG	VOA	6	U	6	U	6	U	5	U	5	U
VINYL ACETATE	UG/KG	VOA	12	U	12	U	12	U	10	U	10	U
VINYL CHLORIDE	UG/KG	VOA	12	U	12	U	12	U	10	U	10	U
XYLENES (TOTAL)	UG/KG	VOA	6	U	6	U	6	U	5	U	5	U

NAVSTA-SAN DIEGO
SITE 7 SOILS

		SAMPLE NUMBER:	NS7-MW1-S07-20		NS7-MW2-S01-10		NS7-MW2-S02-15		NS7-MW2-S03-20		NS7-MW2-S03-20 FD	
		SAMPLING DATE:	01/23/91		01/22/91		01/22/91		01/22/91		01/22/91	
		BORING:	MW1		MW2		MW2		MW2		MW2	
		SITE:	NS7		NS7		NS7		NS7		NS7	
		DEPTH:	20		10		15		20		20 FD	
COMPOUND NAME	UNITS	TEST CODE	RESULT	QUALIFIER	RESULT	QUALIFIER	RESULT	QUALIFIER	RESULT	QUALIFIER	RESULT	QUALIFIER
1,2,4-TRICHLOROBENZENE	UG/KG	BNA	400	U	350	U	400	U	390	U	400	U
1,2-DICHLOROBENZENE	UG/KG	BNA	400	U	350	U	400	U	390	U	400	U
1,3-DICHLOROBENZENE	UG/KG	BNA	400	U	350	U	400	U	390	U	400	U
1,4-DICHLOROBENZENE	UG/KG	BNA	400	U	350	U	400	U	390	U	400	U
2,4,5-TRICHLOROPHENOL	UG/KG	BNA	2000	U	1700	U	2000	U	1900	U	2000	U
2,4,6-TRICHLOROPHENOL	UG/KG	BNA	400	U	350	U	400	U	390	U	400	U
2,4-DICHLOROPHENOL	UG/KG	BNA	400	U	350	U	400	U	390	U	400	U
2,4-DIMETHYLPHENOL	UG/KG	BNA	400	U	350	U	400	U	390	U	400	U
2,4-DINITROPHENOL	UG/KG	BNA	2000	U	1700	U	2000	U	1900	U	2000	U
2,4-DINITROTOLUENE	UG/KG	BNA	400	U	350	U	400	U	390	U	400	U
2,6-DINITROTOLUENE	UG/KG	BNA	400	U	350	U	400	U	390	U	400	U
2-CHLORONAPHTHALENE	UG/KG	BNA	400	U	350	U	400	U	390	U	400	U
2-CHLOROPHENOL	UG/KG	BNA	400	U	350	U	400	U	390	U	400	U
2-METHYLNAPHTHALENE	UG/KG	BNA	400	U	350	U	400	U	390	U	400	U
2-METHYLPHENOL	UG/KG	BNA	400	U	350	U	400	U	390	U	400	U
2-NITROANILINE	UG/KG	BNA	2000	U	1700	U	2000	U	1900	U	2000	U
2-NITROPHENOL	UG/KG	BNA	400	U	350	U	400	U	390	U	400	U
3,3'-DICHLOROBENZIDINE	UG/KG	BNA	810	U	690	U	810	U	780	U	810	U
3-NITROANILINE	UG/KG	BNA	2000	U	1700	U	2000	U	1900	U	2000	U
4,6-DINITRO-2-METHYLPHENOL	UG/KG	BNA	2000	U	1700	U	2000	U	1900	U	2000	U
4-BROMOPHENYL-PHENYLETHER	UG/KG	BNA	400	U	350	U	400	U	390	U	400	U
4-CHLORO-3-METHYLPHENOL	UG/KG	BNA	400	U	350	U	400	U	390	U	400	U
4-CHLOROANILINE	UG/KG	BNA	400	U	350	U	400	U	390	U	400	U
4-CHLOROPHENYL-PHENYLETHER	UG/KG	BNA	400	U	350	U	400	U	390	U	400	U
4-METHYLPHENOL	UG/KG	BNA	400	U	350	U	400	U	390	U	400	U
4-NITROANILINE	UG/KG	BNA	2000	U	1700	U	2000	U	1900	U	2000	U
4-NITROPHENOL	UG/KG	BNA	2000	U	1700	U	2000	U	1900	U	2000	U
ACENAPHTHENE	UG/KG	BNA	400	U	350	U	400	U	390	U	400	U
ACENAPHTHYLENE	UG/KG	BNA	400	U	350	U	400	U	390	U	400	U
ANTHRACENE	UG/KG	BNA	400	U	350	U	400	U	390	U	400	U
BENZO(A)ANTHRACENE	UG/KG	BNA	400	U	350	U	400	U	390	U	400	U
BENZO(A)PYRENE	UG/KG	BNA	400	U	350	U	400	U	390	U	400	U
BENZO(B)FLUORANTHENE	UG/KG	BNA	400	U	350	U	400	U	390	U	400	U
BENZO(G,H,I)PERYLENE	UG/KG	BNA	400	U	350	U	400	U	390	U	400	U
BENZO(K)FLUORANTHENE	UG/KG	BNA	400	U	350	U	400	U	390	U	400	U
BENZOIC ACID	UG/KG	BNA	2000	U	1700	U	2000	U	1900	U	2000	U
BENZYL ALCOHOL	UG/KG	BNA	400	U	350	U	400	U	390	U	400	U
BIS(2-CHLOROETHOXY)METHANE	UG/KG	BNA	400	U	350	U	400	U	390	U	400	U
BIS(2-CHLOROETHYL)ETHER	UG/KG	BNA	400	U	350	U	400	U	390	U	400	U
BIS(2-CHLOROISOPROPYL)ETHER	UG/KG	BNA	400	U	350	U	400	U	390	U	400	U
BIS(2-ETHYLHEXYL)PHTHALATE	UG/KG	BNA	400	U	350	U	110	J	500		240	J
BUTYLBENZYLPHTHALATE	UG/KG	BNA	400	U	350	U	400	U	390	U	400	U
CHRYSENE	UG/KG	BNA	400	U	350	U	400	U	390	U	400	U
DI-N-BUTYLPHTHALATE	UG/KG	BNA	400	U	350	U	400	U	390	U	400	U
DI-N-OCTYLPHTHALATE	UG/KG	BNA	400	U	350	U	400	U	390	U	400	U
DIBENZ(A,H)ANTHRACENE	UG/KG	BNA	400	U	350	U	400	U	390	U	400	U
DIBENZOFURAN	UG/KG	BNA	400	U	350	U	400	U	390	U	400	U
DIETHYLPHTHALATE	UG/KG	BNA	400	U	350	U	400	U	390	U	400	U
DIMETHYLPHTHALATE	UG/KG	BNA	400	U	350	U	400	U	390	U	400	U
FLUORANTHENE	UG/KG	BNA	400	U	350	U	400	U	390	U	400	U
FLUORENE	UG/KG	BNA	400	U	350	U	400	U	390	U	400	U

NAVSTA-SAN DIEGO
SITE 7 SOILS

		SAMPLE NUMBER:	NS7-MW1-S07-20		NS7-MW2-S01-10		NS7-MW2-S02-15		NS7-MW2-S03-20		NS7-MW2-S03-20 FD	
		SAMPLING DATE:	01/23/91		01/22/91		01/22/91		01/22/91		01/22/91	
		BORING:	MW1		MW2		MW2		MW2		MW2	
		SITE:	NS7		NS7		NS7		NS7		NS7	
		DEPTH:	20		10		15		20		20 FD	
COMPOUND NAME	*UNITS*	*TEST CODE*	*RESULT*	*QUALIFIER*	*RESULT*	*QUALIFIER*	*RESULT*	*QUALIFIER*	*RESULT*	*QUALIFIER*	*RESULT*	*QUALIFIER*
HEXACHLOROBENZENE	UG/KG	BNA	400	U	350	U	400	U	390	U	400	U
HEXACHLOROBUTADIENE	UG/KG	BNA	400	U	350	U	400	U	390	U	400	U
HEXACHLOROCYCLOPENTADIENE	UG/KG	BNA	400	U	350	U	400	U	390	U	400	U
HEXACHLOROETHANE	UG/KG	BNA	400	U	350	U	400	U	390	U	400	U
INDENO(1,2,3-C,D)PYRENE	UG/KG	BNA	400	U	350	U	400	U	390	U	400	U
ISOPHORONE	UG/KG	BNA	400	U	350	U	400	U	390	U	400	U
N-NITROSO-DI-N-PROPYLAMINE	UG/KG	BNA	400	U	350	U	400	U	390	U	400	U
N-NITROSODIPHENYLAMINE (1)	UG/KG	BNA	400	U	350	U	400	U	390	U	400	U
NAPHTHALENE	UG/KG	BNA	400	U	350	U	400	U	390	U	400	U
NITROBENZENE	UG/KG	BNA	400	U	350	U	400	U	390	U	400	U
PENTACHLOROPHENOL	UG/KG	BNA	2000	U	1700	U	2000	U	1900	U	2000	U
PHENANTHRENE	UG/KG	BNA	400	U	350	U	400	U	390	U	400	U
PHENOL	UG/KG	BNA	400	U	350	U	400	U	390	U	400	U
PYRENE	UG/KG	BNA	400	U	350	U	400	U	390	U	400	U
ANTIMONY	UG/KG	CAC METALS	4.5	U	3.7	U	4.4	U	4.3	U	4.5	U
ARSENIC	UG/KG	CAC METALS	4.8		0.74	B	1.4	B	1.4	B	2.9	
BARIUM	UG/KG	CAC METALS	349		38.9	B	99.7		24.5	B	41.0	B
BERYLLIUM	UG/KG	CAC METALS	0.24	U	0.20	U	0.23	U	0.23	U	0.24	U
CADMIUM	UG/KG	CAC METALS	0.95	U	0.80	U	0.92	U	0.90	U	0.71	U
CHROMIUM	UG/KG	CAC METALS	18.1		7.0		17.6		8.1		14.3	
COBALT	UG/KG	CAC METALS	12.1		5.2	B	17.8		3.6	B	6.2	B
COPPER	UG/KG	CAC METALS	28.0	U	12.6		27.2		7.0		49.8	
LEAD	UG/KG	CAC METALS	6.4	U	1.5		3.7		1.9		6.7	
MERCURY	UG/KG	CAC METALS	0.18	U	0.16	U	0.18	U	0.18	U	0.18	U
MOLYBDENUM	UG/KG	CAC METALS	1.7	U	1.4	U	1.6	U	1.6	U	1.6	U
NICKEL	UG/KG	CAC METALS	4.8	B	1.8	U	10.5		2.5	B	3.1	B
SELENIUM	UG/KG	CAC METALS	0.47	U	0.41	U	0.46	U	0.46	U	0.24	U
SILVER	UG/KG	CAC METALS	0.71	U	0.60	U	1.1	B	0.68	U	0.47	U
THALLIUM	UG/KG	CAC METALS	0.47	U	0.41	U	0.46	U	0.46	U	0.47	U
VANADIUM	UG/KG	CAC METALS	55.2		32.0		84.0		19.2		32.2	
ZINC	UG/KG	CAC METALS	48.0	U	15.8		48.6		20.8		38.7	
CAC WET EXTRACTION	DATE	CAC WET EX										
LEAD	MG/L	CAC WET EX										
TOTAL CYANIDE	MG/L	CN										
TOTAL CYANIDE	UG/KG	CN	1	U	1	U	1	U	1	U	1	U
4,4'-DDD	UG/KG	PEST / PCB	20	U	17	U	20	U	19	U	20	U
4,4'-DDE	UG/KG	PEST / PCB	20	U	17	U	20	U	19	U	20	U
4,4'-DDT	UG/KG	PEST / PCB	20	U	17	U	20	U	19	U	20	U
ALDRIN	UG/KG	PEST / PCB	9.8	U	8.4	U	9.8	U	9.4	U	9.8	U
ALPHA-BHC	UG/KG	PEST / PCB	9.8	U	8.4	U	9.8	U	9.4	U	9.8	U
ALPHA-CHLORDANE	UG/KG	PEST / PCB	98	U	84	U	98	U	94	U	98	U
BETA-BHC	UG/KG	PEST / PCB	9.8	U	8.4	U	9.8	U	9.4	U	9.8	U
DELTA-BHC	UG/KG	PEST / PCB	9.8	U	8.4	U	9.8	U	9.4	U	9.8	U
DIELDRIN	UG/KG	PEST / PCB	20	U	17	U	20	U	19	U	20	U
ENDOSULFAN I	UG/KG	PEST / PCB	9.8	U	8.4	U	9.8	U	9.4	U	9.8	U
ENDOSULFAN II	UG/KG	PEST / PCB	20	U	17	U	20	U	19	U	20	U
ENDOSULFAN SULFATE	UG/KG	PEST / PCB	20	U	17	U	20	U	19	U	20	U
ENDRIN	UG/KG	PEST / PCB	20	U	17	U	20	U	19	U	20	U
ENDRIN KETONE	UG/KG	PEST / PCB	20	U	17	U	20	U	19	U	20	U
GAMMA-BHC (LINDANE)	UG/KG	PEST / PCB	9.8	U	8.4	U	9.8	U	9.4	U	9.8	U
GAMMA-CHLORDANE	*UG/KG*	PEST / PCB	98	U	84	U	98	U	94	U	98	U

NAVSTA-SAN DIEGO
SITE 7 SOILS

		SAMPLE NUMBER:	NS7-MW1-S07-20		NS7-MW2-S01-10		NS7-MW2-S02-15		NS7-MW2-S03-20		NS7-MW2-S03-20 FD	
		SAMPLING DATE:	01/23/91		01/22/91		01/22/91		01/22/91		01/22/91	
		BORING:	MW1		MW2		MW2		MW2		MW2	
		SITE:	NS7		NS7		NS7		NS7		NS7	
		DEPTH:	20		10		15		20		20 FD	
COMPOUND NAME	UNITS	TEST CODE	RESULT	QUALIFIER	RESULT	QUALIFIER	RESULT	QUALIFIER	RESULT	QUALIFIER	RESULT	QUALIFIER
HEPTACHLOR	UG/KG	PEST / PCB	9.8	U	8.4	U	9.8	U	9.4	U	9.8	U
HEPTACHLOR EPOXIDE	UG/KG	PEST / PCB	9.8	U	8.4	U	9.8	U	9.4	U	9.8	U
METHOXYCHLOR	UG/KG	PEST / PCB	98	U	84	U	98	U	94	U	98	U
PCB-1016	UG/KG	PEST / PCB	98	U	84	U	98	U	94	U	98	U
PCB-1221	UG/KG	PEST / PCB	98	U	84	U	98	U	94	U	98	U
PCB-1232	UG/KG	PEST / PCB	98	U	84	U	98	U	94	U	98	U
PCB-1242	UG/KG	PEST / PCB	98	U	84	U	98	U	94	U	98	U
PCB-1248	UG/KG	PEST / PCB	98	U	84	U	98	U	94	U	98	U
PCB-1254	UG/KG	PEST / PCB	200	U	170	U	200	U	190	U	200	U
PCB-1260	UG/KG	PEST / PCB	200	U	170	U	200	U	190	U	200	U
TOXAPHENE	UG/KG	PEST / PCB	200	U	170	U	200	U	190	U	200	U
1,1,1-TRICHLOROETHANE	UG/KG	VOA	6	U	5	U	6	U	6	U	6	U
1,1,2,2-TETRACHLOROETHANE	UG/KG	VOA	6	U	5	U	6	U	6	U	6	U
1,1,2-TRICHLOROETHANE	UG/KG	VOA	6	U	5	U	6	U	6	U	6	U
1,1-DICHLOROETHANE	UG/KG	VOA	6	U	5	U	6	U	6	U	6	U
1,1-DICHLOROETHENE	UG/KG	VOA	6	U	5	U	6	U	6	U	6	U
1,2-DICHLOROETHANE	UG/KG	VOA	6	U	5	U	6	U	6	U	6	U
1,2-DICHLOROETHENE (TOTAL)	UG/KG	VOA	6	U	5	U	6	U	6	U	6	U
1,2-DICHLOROPROPANE	UG/KG	VOA	6	U	5	U	6	U	6	U	6	U
2-BUTANONE	UG/KG	VOA	12	U	11	U	12	U	12	U	12	U
2-HEXANONE	UG/KG	VOA	12	U	11	U	12	U	12	U	12	U
4-METHYL-2-PENTANONE	UG/KG	VOA	12	U	11	U	12	U	12	U	12	U
ACETONE	UG/KG	VOA	21	U	11	U	12	U	11	U	15	U
BENZENE	UG/KG	VOA	6	U	5	U	6	U	6	U	6	U
BROMODICHLOROMETHANE	UG/KG	VOA	6	U	5	U	6	U	6	U	6	U
BROMOFORM	UG/KG	VOA	6	U	5	U	6	U	6	U	6	U
BROMOMETHANE	UG/KG	VOA	12	U	11	U	12	U	12	U	12	U
CARBON DISULFIDE	UG/KG	VOA	6	U	5	U	6	U	6	U	6	U
CARBON TETRACHLORIDE	UG/KG	VOA	6	U	5	U	6	U	6	U	6	U
CHLOROBENZENE	UG/KG	VOA	6	U	5	U	6	U	6	U	6	U
CHLOROETHANE	UG/KG	VOA	12	U	11	U	12	U	12	U	12	U
CHLOROFORM	UG/KG	VOA	6	U	5	U	6	U	6	U	6	U
CHLOROMETHANE	UG/KG	VOA	12	U	11	U	12	U	12	U	12	U
CIS-1,3-DICHLOROPROPENE	UG/KG	VOA	6	U	5	U	6	U	6	U	6	U
DIBROMOCHLOROMETHANE	UG/KG	VOA	6	U	5	U	6	U	6	U	6	U
ETHYLBENZENE	UG/KG	VOA	6	U	5	U	6	U	6	U	6	U
METHYLENE CHLORIDE	UG/KG	VOA	17	U	5	U	11	U	8	U	8	U
STYRENE	UG/KG	VOA	6	U	5	U	6	U	6	U	6	U
TETRACHLOROETHENE	UG/KG	VOA	6	U	5	U	6	U	6	U	6	U
TOLUENE	UG/KG	VOA	6	U	5	U	6	U	6	U	6	U
TRANS-1,3-DICHLOROPROPENE	UG/KG	VOA	6	U	5	U	6	U	6	U	6	U
TRICHLOROETHENE	UG/KG	VOA	6	U	5	U	6	U	6	U	6	U
VINYL ACETATE	UG/KG	VOA	12	U	11	U	12	U	12	U	12	U
VINYL CHLORIDE	UG/KG	VOA	12	U	11	U	12	U	12	U	12	U
XYLENES (TOTAL)	UG/KG	VOA	6	U	5	U	6	U	6	U	6	U

NAVSTA-SAN DIEGO
SITE 7 SOILS

		SAMPLE NUMBER:	NS7-MW3-S01-5		NS7-MW3-S02-10		NS7-MW3-S03-15		NS7-MW3-S04-20		NS7-TB	
		SAMPLING DATE:	01/23/91		01/23/91		01/23/91		01/23/91		01/23/91	
		BORING:	MW3		MW3		MW3		MW3			
		SITE:	NS7		NS7		NS7		NS7		NS7	
		DEPTH:	5		10		15		20		NS7-TB	
COMPOUND NAME	UNITS	TEST CODE	RESULT	QUALIFIER	RESULT	QUALIFIER	RESULT	QUALIFIER	RESULT	QUALIFIER	RESULT	QUALIFIER
1,2,4-TRICHLOROBENZENE	UG/KG	BNA	370	U	160	J	410	U	400	U		
1,2-DICHLOROBENZENE	UG/KG	BNA	370	U	410	U	410	U	400	U		
1,3-DICHLOROBENZENE	UG/KG	BNA	370	U	410	U	410	U	400	U		
1,4-DICHLOROBENZENE	UG/KG	BNA	370	U	300	J	410	U	400	U		
2,4,5-TRICHLOROPHENOL	UG/KG	BNA	1800	U	2000	U	2000	U	2000	U		
2,4,6-TRICHLOROPHENOL	UG/KG	BNA	370	U	410	U	410	U	400	U		
2,4-DICHLOROPHENOL	UG/KG	BNA	370	U	410	U	410	U	400	U		
2,4-DIMETHYLPHENOL	UG/KG	BNA	370	U	410	U	410	U	400	U		
2,4-DINITROPHENOL	UG/KG	BNA	1800	U	2000	U	2000	U	2000	U		
2,4-DINITROTOLUENE	UG/KG	BNA	370	U	410	U	410	U	400	U		
2,6-DINITROTOLUENE	UG/KG	BNA	370	U	410	U	410	U	400	U		
2-CHLORONAPHTHALENE	UG/KG	BNA	370	U	410	U	410	U	400	U		
2-CHLOROPHENOL	UG/KG	BNA	370	U	410	U	410	U	400	U		
2-METHYLNAPHTHALENE	UG/KG	BNA	370	U	730		410	U	400	U		
2-METHYLPHENOL	UG/KG	BNA	370	U	410	U	410	U	400	U		
2-NITROANILINE	UG/KG	BNA	1800	U	2000	U	2000	U	2000	U		
2-NITROPHENOL	UG/KG	BNA	370	U	410	U	410	U	400	U		
3,3'-DICHLOROBENZIDINE	UG/KG	BNA	740	U	820	U	820	U	810	U		
3-NITROANILINE	UG/KG	BNA	1800	U	2000	U	2000	U	2000	U		
4,6-DINITRO-2-METHYLPHENOL	UG/KG	BNA	1800	U	2000	U	2000	U	2000	U		
4-BROMOPHENYL-PHENYLETHER	UG/KG	BNA	370	U	410	U	410	U	400	U		
4-CHLORO-3-METHYLPHENOL	UG/KG	BNA	370	U	410	U	410	U	400	U		
4-CHLOROANILINE	UG/KG	BNA	470		1900		410	U	400	U		
4-CHLOROPHENYL-PHENYLETHER	UG/KG	BNA	370	U	410	U	410	U	400	U		
4-METHYLPHENOL	UG/KG	BNA	370	U	410	U	410	U	400	U		
4-NITROANILINE	UG/KG	BNA	1800	U	2000	U	2000	U	2000	U		
4-NITROPHENOL	UG/KG	BNA	1800	U	2000	U	2000	U	2000	U		
ACENAPHTHENE	UG/KG	BNA	370	U	69	J	410	U	400	U		
ACENAPHTHYLENE	UG/KG	BNA	370	U	410	U	410	U	400	U		
ANTHRACENE	UG/KG	BNA	370	U	410	U	410	U	400	U		
BENZO(A)ANTHRACENE	UG/KG	BNA	370	U	170	J	410	U	400	U		
BENZO(A)PYRENE	UG/KG	BNA	370	U	410	U	410	U	400	U		
BENZO(B)FLUORANTHENE	UG/KG	BNA	370	U	140	J	410	U	400	U		
BENZO(G,H,I)PERYLENE	UG/KG	BNA	370	U	410	U	410	U	400	U		
BENZO(K)FLUORANTHENE	UG/KG	BNA	370	U	410	U	410	U	400	U		
BENZOIC ACID	UG/KG	BNA	1800	U	2000	U	2000	U	2000	U		
BENZYL ALCOHOL	UG/KG	BNA	370	U	410	U	410	U	400	U		
BIS(2-CHLOROETHOXY)METHANE	UG/KG	BNA	370	U	410	U	410	U	400	U		
BIS(2-CHLOROETHYL)ETHER	UG/KG	BNA	370	U	410	U	410	U	400	U		
BIS(2-CHLOROISOPROPYL)ETHER	UG/KG	BNA	370	U	410	U	410	U	400	U		
BIS(2-ETHYLHEXYL)PHTHALATE	UG/KG	BNA	650		4400		490		530			
BUTYLBENZYLPHTHALATE	UG/KG	BNA	370	U	410	U	410	U	400	U		
CHRYSENE	UG/KG	BNA	370	U	200	J	410	U	400	U		
DI-N-BUTYLPHTHALATE	UG/KG	BNA	370	U	410	U	410	U	400	U		
DI-N-OCTYLPHTHALATE	UG/KG	BNA	370	U	160	J	410	U	400	U		
DIBENZ(A,H)ANTHRACENE	UG/KG	BNA	370	U	410	U	410	U	400	U		
DIBENZOFURAN	UG/KG	BNA	370	U	410	U	410	U	400	U		
DIETHYLPHTHALATE	UG/KG	BNA	370	U	410	U	410	U	400	U		
DIMETHYLPHTHALATE	UG/KG	BNA	370	U	410	U	410	U	400	U		
FLUORANTHENE	UG/KG	BNA	47	J	360	J	410	U	400	U		
FLUORENE	UG/KG	BNA	370	U	110	J	410	U	400	U		

NAVSTA-SAN DIEGO
SITE 7 SOILS

		SAMPLE NUMBER:	NS7-MW3-S01-5		NS7-MW3-S02-10		NS7-MW3-S03-15		NS7-MW3-S04-20		NS7-TB	
		SAMPLING DATE:	01/23/91		01/23/91		01/23/91		01/23/91		01/23/91	
		BORING:	MW3		MW3		MW3		MW3			
		SITE:	NS7		NS7		NS7		NS7		NS7	
		DEPTH:	5		10		15		20		NS7-TB	
COMPOUND NAME	UNITS	TEST CODE	RESULT	QUALIFIER	RESULT	QUALIFIER	RESULT	QUALIFIER	RESULT	QUALIFIER	RESULT	QUALIFIER
HEXACHLOROBENZENE	UG/KG	BNA	370	U	410	U	410	U	400	U		
HEXACHLOROBUTADIENE	UG/KG	BNA	370	U	410	U	410	U	400	U		
HEXACHLOROCYCLOPENTADIENE	UG/KG	BNA	370	U	410	U	410	U	400	U		
HEXACHLOROETHANE	UG/KG	BNA	370	U	410	U	410	U	400	U		
INDENO(1,2,3-C,D)PYRENE	UG/KG	BNA	370	U	410	U	410	U	400	U		
ISOPHORONE	UG/KG	BNA	370	U	410	U	410	U	400	U		
N-NITROSO-DI-N-PROPYLAMINE	UG/KG	BNA	370	U	410	U	410	U	400	U		
N-NITROSODIPHENYLAMINE (1)	UG/KG	BNA	370	U	410	U	410	U	400	U		
NAPHTHALENE	UG/KG	BNA	370	U	410	U	410	U	400	U		
NITROBENZENE	UG/KG	BNA	370	U	410	U	410	U	400	U		
PENTACHLOROPHENOL	UG/KG	BNA	1800	U	2000	U	2000	U	2000	U		
PHENANTHRENE	UG/KG	BNA	370	U	440		410	U	400	U		
PHENOL	UG/KG	BNA	370	U	410	U	410	U	400	U		
PYRENE	UG/KG	BNA	57	J	390	J	410	U	400	U		
ANTIMONY	UG/KG	CAC METALS	4.1	U	4.7	UJ	4.6	U	4.2	U		
ARSENIC	UG/KG	CAC METALS	2.3		2.8		3.9		1.6	U		
BARIUM	UG/KG	CAC METALS	104		239		177		184			
BERYLLIUM	UG/KG	CAC METALS	0.22	U	0.25	U	0.24	U	0.22	U		
CADMIUM	UG/KG	CAC METALS	1.8		4.6		0.98	U	0.89	U		
CHROMIUM	UG/KG	CAC METALS	31.3		85.4		24.0		21.1			
COBALT	UG/KG	CAC METALS	9.1	B	6.9	B	9.7	B	19.8			
COPPER	UG/KG	CAC METALS	26.2	U	97.5		15.5	U	17.8	U		
LEAD	UG/KG	CAC METALS	13.3		77.7		11.2	U	2.7	U		
MERCURY	UG/KG	CAC METALS	0.25		1.5		0.18	U	0.18	U		
MOLYBDENUM	UG/KG	CAC METALS	2.5	B	2.8	B	1.7	U	1.6	U		
NICKEL	UG/KG	CAC METALS	9.1		23.6		5.1	B	7.5	B		
SELENIUM	UG/KG	CAC METALS	0.44	U	0.49	U	0.47	U	0.48	U		
SILVER	UG/KG	CAC METALS	4.2	U	16.5		1.7	U	1.9	U		
THALLIUM	UG/KG	CAC METALS	0.44	U	0.49	U	0.47	U	0.48	U		
VANADIUM	UG/KG	CAC METALS	63.6		40.4		66.3		68.4			
ZINC	UG/KG	CAC METALS	78.8	U	277	U	58.0	U	49.2	U		
CAC WET EXTRACTION	DATE	CAC WET EX										
LEAD	MG/L	CAC WET EX	0.964									
TOTAL CYANIDE	MG/L	CN										
TOTAL CYANIDE	UG/KG	CN	1	U	1	U	1	U	1	U		
4,4'-DDD	UG/KG	PEST / PCB	36	U	40	UJ	20	U	20	U		
4,4'-DDE	UG/KG	PEST / PCB	36	U	80	J	20	U	20	U		
4,4'-DDT	UG/KG	PEST / PCB	36	U	40	UJ	20	U	20	U		
ALDRIN	UG/KG	PEST / PCB	18	U	20	UJ	9.9	U	9.8	U		
ALPHA-BHC	UG/KG	PEST / PCB	18	U	20	UJ	9.9	U	9.8	U		
ALPHA-CHLORDANE	UG/KG	PEST / PCB	180	U	200	UJ	99	U	98	U		
BETA-BHC	UG/KG	PEST / PCB	18	U	20	UJ	9.9	U	9.8	U		
DELTA-BHC	UG/KG	PEST / PCB	18	U	20	UJ	9.9	U	9.8	U		
DIELDRIN	UG/KG	PEST / PCB	36	U	40	UJ	20	U	20	U		
ENDOSULFAN I	UG/KG	PEST / PCB	24	J	20	UJ	9.9	U	9.8	U		
ENDOSULFAN II	UG/KG	PEST / PCB	36	U	40	UJ	20	U	20	U		
ENDOSULFAN SULFATE	UG/KG	PEST / PCB	36	U	40	UJ	20	U	20	U		
ENDRIN	UG/KG	PEST / PCB	36	U	40	UJ	20	U	20	U		
ENDRIN KETONE	UG/KG	PEST / PCB	36	U	40	UJ	20	U	20	U		
GAMMA-BHC (LINDANE)	UG/KG	PEST / PCB	18	U	20	UJ	9.9	U	9.8	U		
GAMMA-CHLORDANE	UG/KG	PEST / PCB	180	U	200	UJ	99	U	98	U		

NAVSTA-SAN DIEGO
SITE 7 SOILS

		SAMPLE NUMBER:	NS7-MW3-S01-5		NS7-MW3-S02-10		NS7-MW3-S03-15		NS7-MW3-S04-20		NS7-TB	
		SAMPLING DATE:	01/23/91		01/23/91		01/23/91		01/23/91		01/23/91	
		BORING:	MW3		MW3		MW3		MW3			
		SITE:	NS7		NS7		NS7		NS7		NS7	
		DEPTH:	5		10		15		20		NS7-TB	
COMPOUND NAME	UNITS	TEST CODE	RESULT	QUALIFIER	RESULT	QUALIFIER	RESULT	QUALIFIER	RESULT	QUALIFIER	RESULT	QUALIFIER
HEPTACHLOR	UG/KG	PEST / PCB	18	U	20	UJ	9.9	U	9.8	U		
HEPTACHLOR EPOXIDE	UG/KG	PEST / PCB	18	U	20	UJ	9.9	U	9.8	U		
METHOXYCHLOR	UG/KG	PEST / PCB	180	U	200	UJ	99	U	98	U		
PCB-1016	UG/KG	PEST / PCB	180	U	200	UJ	99	U	98	U		
PCB-1221	UG/KG	PEST / PCB	180	U	200	UJ	99	U	98	U		
PCB-1232	UG/KG	PEST / PCB	180	U	200	UJ	99	U	98	U		
PCB-1242	UG/KG	PEST / PCB	180	U	200	UJ	99	U	98	U		
PCB-1248	UG/KG	PEST / PCB	180	U	200	UJ	99	U	98	U		
PCB-1254	UG/KG	PEST / PCB	390		720	J	200	U	200	U		
PCB-1260	UG/KG	PEST / PCB	360	U	400	UJ	200	U	200	U		
TOXAPHENE	UG/KG	PEST / PCB	360	U	400	UJ	200	U	200	U		
1,1,1-TRICHLOROETHANE	UG/KG	VOA	6	U	31	U	6	U	6	U	5	U
1,1,2,2-TETRACHLOROETHANE	UG/KG	VOA	6	U	31	U	6	U	6	U	5	U
1,1,2-TRICHLOROETHANE	UG/KG	VOA	6	U	31	U	6	U	6	U	5	U
1,1-DICHLOROETHANE	UG/KG	VOA	6	U	31	U	6	U	6	U	5	U
1,1-DICHLOROETHENE	UG/KG	VOA	6	U	31	U	6	U	6	U	5	U
1,2-DICHLOROETHANE	UG/KG	VOA	6	U	31	U	6	U	6	U	5	U
1,2-DICHLOROETHENE (TOTAL)	UG/KG	VOA	6	U	31	U	6	U	6	U	5	U
1,2-DICHLOROPROPANE	UG/KG	VOA	6	U	31	U	6	U	6	U	5	U
2-BUTANONE	UG/KG	VOA	11	U	35	J	12	U	12	U	10	U
2-HEXANONE	UG/KG	VOA	11	U	62	U	12	U	12	U	10	U
4-METHYL-2-PENTANONE	UG/KG	VOA	11	U	62	U	12	U	12	U	10	U
ACETONE	UG/KG	VOA	11	U	110	U	12	U	12	U	10	U
BENZENE	UG/KG	VOA	6	U	31	U	6	U	6	U	5	U
BROMODICHLOROMETHANE	UG/KG	VOA	6	U	31	U	6	U	6	U	5	U
BROMOFORM	UG/KG	VOA	6	U	31	U	6	U	6	U	5	U
BROMOMETHANE	UG/KG	VOA	11	U	62	U	12	U	12	U	10	U
CARBON DISULFIDE	UG/KG	VOA	6	U	31	U	6	U	6	U	5	U
CARBON TETRACHLORIDE	UG/KG	VOA	6	U	31	U	6	U	6	U	5	U
CHLOROBENZENE	UG/KG	VOA	6	U	31	U	6	U	6	U	5	U
CHLOROETHANE	UG/KG	VOA	11	U	62	U	12	U	12	U	10	U
CHLOROFORM	UG/KG	VOA	6	U	31	U	6	U	6	U	5	U
CHLOROMETHANE	UG/KG	VOA	11	U	62	U	12	U	12	U	10	U
CIS-1,3-DICHLOROPROPENE	UG/KG	VOA	6	U	31	U	6	U	6	U	5	U
DIBROMOCHLOROMETHANE	UG/KG	VOA	6	U	31	U	6	U	6	U	5	U
ETHYLBENZENE	UG/KG	VOA	6	U	48		6	U	6	U	5	U
METHYLENE CHLORIDE	UG/KG	VOA	7	U	40	U	7	U	5	U	5	B
STYRENE	UG/KG	VOA	6	U	31	U	6	U	6	U	5	U
TETRACHLOROETHENE	UG/KG	VOA	6	U	31	U	6	U	6	U	5	U
TOLUENE	UG/KG	VOA	6	U	44		6	U	6	U	5	U
TRANS-1,3-DICHLOROPROPENE	UG/KG	VOA	6	U	31	U	6	U	6	U	5	U
TRICHLOROETHENE	UG/KG	VOA	6	U	31	U	6	U	6	U	5	U
VINYL ACETATE	UG/KG	VOA	11	U	62	U	12	U	12	U	10	U
VINYL CHLORIDE	UG/KG	VOA	11	U	62	U	12	U	12	U	10	U
XYLENES (TOTAL)	UG/KG	VOA	6	U	290		6	U	6	U	5	U

NAVSTA-SAN DIEGO
SITE 7 SOILS

		SAMPLE NUMBER:	NS7-TB1		NS7-TB2		NS7-WAER	
		SAMPLING DATE:	01/22/91		01/22/91		01/23/91	
		BORING:						
		SITE:	NS7		NS7		NS7	
		DEPTH:	NS7-TB1		NS7-TB2		NS7-WAER	
COMPOUND NAME	UNITS	TEST CODE	RESULT	QUALIFIER	RESULT	QUALIFIER	RESULT	QUALIFIER
1,2,4-TRICHLOROBENZENE	UG/KG	BNA					10	U
1,2-DICHLOROBENZENE	UG/KG	BNA					10	U
1,3-DICHLOROBENZENE	UG/KG	BNA					10	U
1,4-DICHLOROBENZENE	UG/KG	BNA					10	U
2,4,5-TRICHLOROPHENOL	UG/KG	BNA					10	U
2,4,6-TRICHLOROPHENOL	UG/KG	BNA					10	U
2,4-DICHLOROPHENOL	UG/KG	BNA					10	U
2,4-DIMETHYLPHENOL	UG/KG	BNA					10	U
2,4-DINITROPHENOL	UG/KG	BNA					50	U
2,4-DINITROTOLUENE	UG/KG	BNA					10	U
2,6-DINITROTOLUENE	UG/KG	BNA					10	U
2-CHLORONAPHTHALENE	UG/KG	BNA					10	U
2-CHLOROPHENOL	UG/KG	BNA					10	U
2-METHYLNAPHTHALENE	UG/KG	BNA					10	U
2-METHYLPHENOL	UG/KG	BNA					10	U
2-NITROANILINE	UG/KG	BNA					50	U
2-NITROPHENOL	UG/KG	BNA					10	U
3,3'-DICHLOROBENZIDINE	UG/KG	BNA					20	U
3-NITROANILINE	UG/KG	BNA					50	U
4,6-DINITRO-2-METHYLPHENOL	UG/KG	BNA					50	U
4-BROMOPHENYL-PHENYLETHER	UG/KG	BNA					10	U
4-CHLORO-3-METHYLPHENOL	UG/KG	BNA					10	U
4-CHLOROANILINE	UG/KG	BNA					10	U
4-CHLOROPHENYL-PHENYLETHER	UG/KG	BNA					10	U
4-METHYLPHENOL	UG/KG	BNA					10	U
4-NITROANILINE	UG/KG	BNA					50	U
4-NITROPHENOL	UG/KG	BNA					50	U
ACENAPHTHENE	UG/KG	BNA					10	U
ACENAPHTHYLENE	UG/KG	BNA					10	U
ANTHRACENE	UG/KG	BNA					10	U
BENZO(A)ANTHRACENE	UG/KG	BNA					10	U
BENZO(A)PYRENE	UG/KG	BNA					10	U
BENZO(B)FLUORANTHENE	UG/KG	BNA					10	U
BENZO(G,H,I)PERYLENE	UG/KG	BNA					10	U
BENZO(K)FLUORANTHENE	UG/KG	BNA					10	U
BENZOIC ACID	UG/KG	BNA					50	U
BENZYL ALCOHOL	UG/KG	BNA					10	U
BIS(2-CHLOROETHOXY)METHANE	UG/KG	BNA					10	U
BIS(2-CHLOROETHYL)ETHER	UG/KG	BNA					10	U
BIS(2-CHLOROISOPROPYL)ETHER	UG/KG	BNA					10	U
BIS(2-ETHYLHEXYL)PHTHALATE	UG/KG	BNA					6	J
BUTYLBENZYLPHTHALATE	UG/KG	BNA					10	U
CHRYSENE	UG/KG	BNA					10	U
DI-N-BUTYLPHTHALATE	UG/KG	BNA					10	U
DI-N-OCTYLPHTHALATE	UG/KG	BNA					10	U
DIBENZ(A,H)ANTHRACENE	UG/KG	BNA					10	U
DIBENZOFURAN	UG/KG	BNA					10	U
DIETHYLPHTHALATE	UG/KG	BNA					10	U
DIMETHYLPHTHALATE	UG/KG	BNA					10	U
FLUORANTHENE	UG/KG	BNA					10	U
FLUORENE	UG/KG	BNA					10	U

NAVSTA-SAN DIEGO
SITE 7 SOILS

		SAMPLE NUMBER:	NS7-TB1		NS7-TB2		NS7-WAER	
		SAMPLING DATE:	01/22/91		01/22/91		01/23/91	
		BORING:						
		SITE:	NS7		NS7		NS7	
		DEPTH:	NS7-TB1		NS7-TB2		NS7-WAER	
COMPOUND NAME	UNITS	TEST CODE	RESULT	QUALIFIER	RESULT	QUALIFIER	RESULT	QUALIFIER
HEXACHLOROBENZENE	UG/KG	BNA					10	U
HEXACHLOROBUTADIENE	UG/KG	BNA					10	U
HEXACHLOROCYCLOPENTADIENE	UG/KG	BNA					10	U
HEXACHLOROETHANE	UG/KG	BNA					10	U
INDENO(1,2,3-C,D)PYRENE	UG/KG	BNA					10	U
ISOPHORONE	UG/KG	BNA					10	U
N-NITROSO-DI-N-PROPYLAMINE	UG/KG	BNA					10	U
N-NITROSODIPHENYLAMINE (1)	UG/KG	BNA					10	U
NAPHTHALENE	UG/KG	BNA					10	U
NITROBENZENE	UG/KG	BNA					10	U
PENTACHLOROPHENOL	UG/KG	BNA					50	U
PHENANTHRENE	UG/KG	BNA					10	U
PHENOL	UG/KG	BNA					11	
PYRENE	UG/KG	BNA					10	U
ANTIMONY	UG/KG	CAC METALS					19.0	U
ARSENIC	UG/KG	CAC METALS					1.9	B
BARIUM	UG/KG	CAC METALS					33.2	B
BERYLLIUM	UG/KG	CAC METALS					1.0	U
CADMIUM	UG/KG	CAC METALS					4.0	U
CHROMIUM	UG/KG	CAC METALS					4.0	U
COBALT	UG/KG	CAC METALS					5.0	U
COPPER	UG/KG	CAC METALS					65.4	
LEAD	UG/KG	CAC METALS					10.3	
MERCURY	UG/KG	CAC METALS					0.20	U
MOLYBDENUM	UG/KG	CAC METALS					7.0	U
NICKEL	UG/KG	CAC METALS					9.0	U
SELENIUM	UG/KG	CAC METALS					2.0	U
SILVER	UG/KG	CAC METALS					4.0	B
THALLIUM	UG/KG	CAC METALS					2.0	U
VANADIUM	UG/KG	CAC METALS					5.5	B
ZINC	UG/KG	CAC METALS					742	
CAC WET EXTRACTION	DATE	CAC WET EX						
LEAD	MG/L	CAC WET EX						
TOTAL CYANIDE	MG/L	CN					0.02	U
TOTAL CYANIDE	UG/KG	CN						
4,4'-DDD	UG/KG	PEST / PCB					0.1	U
4,4'-DDE	UG/KG	PEST / PCB					0.1	U
4,4'-DDT	UG/KG	PEST / PCB					0.1	U
ALDRIN	UG/KG	PEST / PCB					0.05	U
ALPHA-BHC	UG/KG	PEST / PCB					0.05	U
ALPHA-CHLORDANE	UG/KG	PEST / PCB					0.5	U
BETA-BHC	UG/KG	PEST / PCB					0.05	U
DELTA-BHC	UG/KG	PEST / PCB					0.05	U
DIELDRIN	UG/KG	PEST / PCB					0.1	U
ENDOSULFAN I	UG/KG	PEST / PCB					0.05	U
ENDOSULFAN II	UG/KG	PEST / PCB					0.1	U
ENDOSULFAN SULFATE	UG/KG	PEST / PCB					0.1	U
ENDRIN	UG/KG	PEST / PCB					0.1	U
ENDRIN KETONE	UG/KG	PEST / PCB					0.1	U
GAMMA-BHC (LINDANE)	UG/KG	PEST / PCB					0.05	U
GAMMA-CHLORDANE	UG/KG	PEST / PCB					0.5	U

NAVSTA-SAN DIEGO
SITE 7 SOILS

		SAMPLE NUMBER:	NS7-TB1		NS7-TB2		NS7-WAER	
		SAMPLING DATE:	01/22/91		01/22/91		01/23/91	
		BORING:						
		SITE:	NS7		NS7		NS7	
		DEPTH:	NS7-TB1		NS7-TB2		NS7-WAER	
COMPOUND NAME	UNITS	TEST CODE	RESULT	QUALIFIER	RESULT	QUALIFIER	RESULT	QUALIFIER
HEPTACHLOR	UG/KG	PEST / PCB					0.05	U
HEPTACHLOR EPOXIDE	UG/KG	PEST / PCB					0.05	U
METHOXYCHLOR	UG/KG	PEST / PCB					0.5	U
PCB-1016	UG/KG	PEST / PCB					0.5	U
PCB-1221	UG/KG	PEST / PCB					0.5	U
PCB-1232	UG/KG	PEST / PCB					0.5	U
PCB-1242	UG/KG	PEST / PCB					0.5	U
PCB-1248	UG/KG	PEST / PCB					0.5	U
PCB-1254	UG/KG	PEST / PCB					1	U
PCB-1260	UG/KG	PEST / PCB					1	U
TOXAPHENE	UG/KG	PEST / PCB					1	U
1,1,1-TRICHLOROETHANE	UG/KG	VOA	5	U	5	U	5	U
1,1,2,2-TETRACHLOROETHANE	UG/KG	VOA	5	U	5	U	5	U
1,1,2-TRICHLOROETHANE	UG/KG	VOA	5	U	5	U	5	U
1,1-DICHLOROETHANE	UG/KG	VOA	5	U	5	U	5	U
1,1-DICHLOROETHENE	UG/KG	VOA	5	U	5	U	5	U
1,2-DICHLOROETHANE	UG/KG	VOA	5	U	5	U	5	U
1,2-DICHLOROETHENE (TOTAL)	UG/KG	VOA	5	U	5	U	5	U
1,2-DICHLOROPROPANE	UG/KG	VOA	5	U	5	U	5	U
2-BUTANONE	UG/KG	VOA	10	U	10	U	10	U
2-HEXANONE	UG/KG	VOA	10	U	10	U	10	U
4-METHYL-2-PENTANONE	UG/KG	VOA	10	U	10	U	10	U
ACETONE	UG/KG	VOA	11	B	14	B	6	J
BENZENE	UG/KG	VOA	5	U	5	U	5	U
BROMODICHLOROMETHANE	UG/KG	VOA	5		4	J	3	J
BROMOFORM	UG/KG	VOA	5	U	5	U	5	U
BROMOMETHANE	UG/KG	VOA	10	U	10	U	10	U
CARBON DISULFIDE	UG/KG	VOA	5	U	5	U	5	U
CARBON TETRACHLORIDE	UG/KG	VOA	5	U	5	U	5	U
CHLOROBENZENE	UG/KG	VOA	5	U	5	U	5	U
CHLOROETHANE	UG/KG	VOA	10	U	10	U	10	U
CHLOROFORM	UG/KG	VOA	12		12		2	J
CHLOROMETHANE	UG/KG	VOA	10	U	10	U	10	U
CIS-1,3-DICHLOROPROPENE	UG/KG	VOA	5	U	5	U	5	U
DIBROMOCHLOROMETHANE	UG/KG	VOA	4	J	3	J	3	J
ETHYLBENZENE	UG/KG	VOA	5	U	5	U	5	U
METHYLENE CHLORIDE	UG/KG	VOA	2	BJ	3	BJ	4	BJ
STYRENE	UG/KG	VOA	5	U	5	U	5	U
TETRACHLOROETHENE	UG/KG	VOA	5	U	5	U	5	U
TOLUENE	UG/KG	VOA	5	U	5	U	5	U
TRANS-1,3-DICHLOROPROPENE	UG/KG	VOA	5	U	5	U	5	U
TRICHLOROETHENE	UG/KG	VOA	5	U	5	U	5	U
VINYL ACETATE	UG/KG	VOA	10	U	10	U	10	U
VINYL CHLORIDE	UG/KG	VOA	10	U	10	U	10	U
XYLENES (TOTAL)	UG/KG	VOA	5	U	5	U	5	U

NAVSTA-SAN DIEGO
SITE 8 SOILS

		SAMPLE NUMBER:	NS8-BH1-S01-10		NS8-BH1-S02-5		NS8-BH2-S01-10		NS8-BH2-S02-15		NS8-BH3-S01-10	
		SAMPLING DATE:	01/30/91		01/30/91		01/30/91		01/30/91		02/01/91	
		BORING:	BH1		BH1		BH2		BH2		BH3	
		SITE:	NS8		NS8		NS8		NS8		NS8	
		DEPTH:	10		5		10		15		10	
COMPOUND NAME	UNITS	TEST CODE	RESULT	QUALIFIER	RESULT	QUALIFIER	RESULT	QUALIFIER	RESULT	QUALIFIER	RESULT	QUALIFIER
1,2,4-TRICHLOROBENZENE	UG/KG	BNA	370	U	350	U	370	U	400	U	350	U
1,2-DICHLOROBENZENE	UG/KG	BNA	370	U	350	U	370	U	400	U	350	U
1,3-DICHLOROBENZENE	UG/KG	BNA	370	U	350	U	370	U	400	U	350	U
1,4-DICHLOROBENZENE	UG/KG	BNA	370	U	350	U	370	U	400	U	350	U
2,4,5-TRICHLOROPHENOL	UG/KG	BNA	1800	U	1700	U	1800	U	1900	U	1700	U
2,4,6-TRICHLOROPHENOL	UG/KG	BNA	370	U	350	U	370	U	400	U	350	U
2,4-DICHLOROPHENOL	UG/KG	BNA	370	U	350	U	370	U	400	U	350	U
2,4-DIMETHYLPHENOL	UG/KG	BNA	370	U	350	U	370	U	400	U	350	U
2,4-DINITROPHENOL	UG/KG	BNA	1800	U	1700	U	1800	U	1900	U	1700	U
2,4-DINITROTOLUENE	UG/KG	BNA	370	U	350	U	370	U	400	U	350	U
2,6-DINITROTOLUENE	UG/KG	BNA	370	U	350	U	370	U	400	U	350	U
2-CHLORONAPHTHALENE	UG/KG	BNA	370	U	350	U	370	U	400	U	350	U
2-CHLOROPHENOL	UG/KG	BNA	370	U	350	U	370	U	400	U	350	U
2-METHYLNAPHTHALENE	UG/KG	BNA	370	U	350	U	370	U	1800		350	U
2-METHYLPHENOL	UG/KG	BNA	370	U	350	U	370	U	400	U	350	U
2-NITROANILINE	UG/KG	BNA	1800	U	1700	U	1800	U	1900	U	1700	U
2-NITROPHENOL	UG/KG	BNA	370	U	350	U	370	U	400	U	350	U
3,3'-DICHLOROBENZIDINE	UG/KG	BNA	750	U	700	U	750	U	800	U	700	U
3-NITROANILINE	UG/KG	BNA	1800	U	1700	U	1800	U	1900	U	1700	U
4,6-DINITRO-2-METHYLPHENOL	UG/KG	BNA	1800	U	1700	U	1800	U	1900	U	1700	U
4-BROMOPHENYL-PHENYLETHER	UG/KG	BNA	370	U	350	U	370	U	400	U	350	U
4-CHLORO-3-METHYLPHENOL	UG/KG	BNA	370	U	350	U	370	U	400	U	350	U
4-CHLOROANILINE	UG/KG	BNA	370	U	350	U	370	U	400	U	350	U
4-CHLOROPHENYL-PHENYLETHER	UG/KG	BNA	370	U	350	U	370	U	400	U	350	U
4-METHYLPHENOL	UG/KG	BNA	370	U	350	U	370	U	400	U	350	U
4-NITROANILINE	UG/KG	BNA	1800	U	1700	U	1800	U	1900	U	1700	U
4-NITROPHENOL	UG/KG	BNA	1800	U	1700	U	1800	U	1900	U	1700	U
ACENAPHTHENE	UG/KG	BNA	370	U	350	U	370	U	400	U	350	U
ACENAPHTHYLENE	UG/KG	BNA	370	U	350	U	370	U	400	U	350	U
ANTHRACENE	UG/KG	BNA	370	U	350	U	370	U	400	U	350	U
BENZO(A)ANTHRACENE	UG/KG	BNA	370	U	350	U	370	U	400	U	350	U
BENZO(A)PYRENE	UG/KG	BNA	370	U	350	U	370	U	400	U	350	U
BENZO(B)FLUORANTHENE	UG/KG	BNA	370	U	350	U	370	U	400	U	350	U
BENZO(G,H,I)PERYLENE	UG/KG	BNA	370	U	350	U	370	U	400	U	350	U
BENZO(K)FLUORANTHENE	UG/KG	BNA	370	U	350	U	370	U	400	U	350	U
BENZOIC ACID	UG/KG	BNA	1800	U	1700	U	1800	U	1900	U	1700	U
BENZYL ALCOHOL	UG/KG	BNA	370	U	350	U	370	U	400	U	350	U
BIS(2-CHLOROETHOXY)METHANE	UG/KG	BNA	370	U	350	U	370	U	400	U	350	U
BIS(2-CHLOROETHYL)ETHER	UG/KG	BNA	370	U	350	U	370	U	400	U	350	U
BIS(2-CHLOROISOPROPYL)ETHER	UG/KG	BNA	370	U	350	U	370	U	400	U	350	U
BIS(2-ETHYLHEXYL)PHTHALATE	UG/KG	BNA	370	U	350	U	370	U	400	U	350	U
BUTYLBENZYLPHTHALATE	UG/KG	BNA	370	U	350	U	370	U	400	U	350	U
CHRYSENE	UG/KG	BNA	370	U	350	U	370	U	400	U	350	U
DI-N-BUTYLPHTHALATE	UG/KG	BNA	370	U	350	U	370	U	400	U	350	U
DI-N-OCTYLPHTHALATE	UG/KG	BNA	370	U	350	U	370	U	400	U	350	U
DIBENZ(A,H)ANTHRACENE	UG/KG	BNA	370	U	350	U	370	U	400	U	350	U
DIBENZOFURAN	UG/KG	BNA	370	U	350	U	370	U	400	U	350	U
DIETHYLPHTHALATE	UG/KG	BNA	370	U	350	U	370	U	400	U	350	U
DIMETHYLPHTHALATE	UG/KG	BNA	370	U	350	U	370	U	400	U	350	U
FLUORANTHENE	UG/KG	BNA	370	U	350	U	370	U	400	U	350	U
FLUORENE	UG/KG	BNA	370	U	350	U	370	U	62	J	350	U

NAVSTA-SAN DIEGO
SITE 8 SOILS

		SAMPLE NUMBER:	NS8-BH1-S01-10		NS8-BH1-S02-5		NS8-BH2-S01-10		NS8-BH2-S02-15		NS8-BH3-S01-10	
		SAMPLING DATE:	01/30/91		01/30/91		01/30/91		01/30/91		02/01/91	
		BORING:	BH1		BH1		BH2		BH2		BH3	
		SITE:	NS8		NS8		NS8		NS8		NS8	
		DEPTH:	10		5		10		15		10	
COMPOUND NAME	UNITS	TEST CODE	RESULT	QUALIFIER	RESULT	QUALIFIER	RESULT	QUALIFIER	RESULT	QUALIFIER	RESULT	QUALIFIER
HEXACHLOROBENZENE	UG/KG	BNA	370	U	350	U	370	U	400	U	350	U
HEXACHLOROBUTADIENE	UG/KG	BNA	370	U	350	U	370	U	400	U	350	U
HEXACHLOROCYCLOPENTADIENE	UG/KG	BNA	370	U	350	U	370	U	400	U	350	U
HEXACHLOROETHANE	UG/KG	BNA	370	U	350	U	370	U	400	U	350	U
INDENO(1,2,3-C,D)PYRENE	UG/KG	BNA	370	U	350	U	370	U	400	U	350	U
ISOPHORONE	UG/KG	BNA	370	U	350	U	370	U	400	U	350	U
N-NITROSO-DI-N-PROPYLAMINE	UG/KG	BNA	370	U	350	U	370	U	400	U	350	U
N-NITROSODIPHENYLAMINE (1)	UG/KG	BNA	370	U	350	U	370	U	400	U	350	U
NAPHTHALENE	UG/KG	BNA	370	U	350	U	370	U	550		350	U
NITROBENZENE	UG/KG	BNA	370	U	350	U	370	U	400	U	350	U
PENTACHLOROPHENOL	UG/KG	BNA	1800	U	1700	U	1800	U	1900	U	1700	U
PHENANTHRENE	UG/KG	BNA	370	U	350	U	370	U	51	J	350	U
PHENOL	UG/KG	BNA	370	U	350	U	370	U	400	U	350	U
PYRENE	UG/KG	BNA	370	U	350	U	370	U	400	U	350	U
ANTIMONY	MG/KG	CAC METALS	4.0	U	3.8	U	4.1	U	4.3	UJ	4.0	U
ARSENIC	MG/KG	CAC METALS	1.6	B	4.6		1.9	B	2.0	BJ	1.5	B
BARIUM	MG/KG	CAC METALS	15.8	B	20.8	B	13.0	B	50.9		95.6	
BERYLLIUM	MG/KG	CAC METALS	0.31	B	0.50	B	0.33	B	0.31	B	0.80	B
CADMIUM	MG/KG	CAC METALS	0.85	U	0.81	U	0.86	U	0.91	U	0.83	U
CHROMIUM	MG/KG	CAC METALS	4.3		4.7		2.9		4.3		11.7	
COBALT	MG/KG	CAC METALS	2.0	B	2.6	B	1.7	B	2.8	BJ	6.7	B
COPPER	MG/KG	CAC METALS	9.1	U	5.4	U	3.9	U	4.7	U	22.2	U
LEAD	MG/KG	CAC METALS	1.5		13.3		1.7		4.0		1.6	U
MERCURY	MG/KG	CAC METALS	0.17	U	0.72		0.17	U	0.18	U	0.16	U
MOLYBDENUM	MG/KG	CAC METALS	1.5	U	1.4	U	1.5	U	1.6	U	1.5	U
NICKEL	MG/KG	CAC METALS	1.9	U	1.8	U	1.9	U	2.0	UR	2.3	B
SELENIUM	MG/KG	CAC METALS	0.22	U	0.20	U	0.22	U	0.23	U	0.21	U
SILVER	MG/KG	CAC METALS	1.3	U	1.8	U	1.4	U	1.2	B	1.6	U
THALLIUM	MG/KG	CAC METALS	0.22	U	0.20	U	0.50	B	0.23	UJ	0.78	B
VANADIUM	MG/KG	CAC METALS	10	B	22.1		8.0	B	17.6		39.8	
ZINC	MG/KG	CAC METALS	13.9	U	31.0		13.3	U	12.8	U	28.4	U
ANTIMONY	UG/KG	CAC METALS										
ARSENIC	UG/KG	CAC METALS										
BARIUM	UG/KG	CAC METALS										
BERYLLIUM	UG/KG	CAC METALS										
CADMIUM	UG/KG	CAC METALS										
CHROMIUM	UG/KG	CAC METALS										
COBALT	UG/KG	CAC METALS										
COPPER	UG/KG	CAC METALS										
LEAD	UG/KG	CAC METALS										
MERCURY	UG/KG	CAC METALS										
MOLYBDENUM	UG/KG	CAC METALS										
NICKEL	UG/KG	CAC METALS										
SELENIUM	UG/KG	CAC METALS										
SILVER	UG/KG	CAC METALS										
THALLIUM	UG/KG	CAC METALS										
VANADIUM	UG/KG	CAC METALS										
ZINC	UG/KG	CAC METALS										
TOTAL CYANIDE	MG/KG	CN	1	UJ	1	UJ	1	UJ	1	UJ	1	UJ
TOTAL CYANIDE	MG/L	CN										
4,4'-DDD	UG/KG	PEST / PCB	18	U	17	U	18	U	19	U	17	U

NAVSTA-SAN DIEGO
SITE 8 SOILS

		SAMPLE NUMBER:	NS8-BH1-S01-10		NS8-BH1-S02-5		NS8-BH2-S01-10		NS8-BH2-S02-15		NS8-BH3-S01-10	
		SAMPLING DATE:	01/30/91		01/30/91		01/30/91		01/30/91		02/01/91	
		BORING:	BH1		BH1		BH2		BH2		BH3	
		SITE:	NS8		NS8		NS8		NS8		NS8	
		DEPTH:	10		5		10		15		10	
COMPOUND NAME	UNITS	TEST CODE	RESULT	QUALIFIER	RESULT	QUALIFIER	RESULT	QUALIFIER	RESULT	QUALIFIER	RESULT	QUALIFIER
4,4'-DDE	UG/KG	PEST / PCB	18	U	17	U	18	U	19	U	17	U
4,4'-DDT	UG/KG	PEST / PCB	18	U	17	U	18	U	19	U	17	U
ALDRIN	UG/KG	PEST / PCB	9.1	U	8.5	U	9.1	U	9.6	U	8.5	U
ALPHA-BHC	UG/KG	PEST / PCB	9.1	U	8.5	U	9.1	U	9.6	U	8.5	U
ALPHA-CHLORDANE	UG/KG	PEST / PCB	91	U	85	U	91	U	96	U	85	U
BETA-BHC	UG/KG	PEST / PCB	9.1	U	8.5	U	9.1	U	9.6	U	8.5	U
DELTA-BHC	UG/KG	PEST / PCB	9.1	U	8.5	U	9.1	U	9.6	U	8.5	U
DIELDRIN	UG/KG	PEST / PCB	18	U	17	U	18	U	19	U	17	U
ENDOSULFAN I	UG/KG	PEST / PCB	9.1	U	8.5	U	9.1	U	9.6	U	8.5	U
ENDOSULFAN II	UG/KG	PEST / PCB	18	U	17	U	18	U	19	U	17	U
ENDOSULFAN SULFATE	UG/KG	PEST / PCB	18	U	17	U	18	U	19	U	17	U
ENDRIN	UG/KG	PEST / PCB	18	U	17	U	18	U	19	U	17	U
ENDRIN KETONE	UG/KG	PEST / PCB	18	U	17	U	18	U	19	U	17	U
GAMMA-BHC (LINDANE)	UG/KG	PEST / PCB	9.1	U	8.5	U	9.1	U	9.6	U	8.5	U
GAMMA-CHLORDANE	UG/KG	PEST / PCB	91	U	85	U	91	U	96	U	85	U
HEPTACHLOR	UG/KG	PEST / PCB	9.1	U	8.5	U	9.1	U	9.6	U	8.5	U
HEPTACHLOR EPOXIDE	UG/KG	PEST / PCB	9.1	U	8.5	U	9.1	U	9.6	U	8.5	U
METHOXYCHLOR	UG/KG	PEST / PCB	91	U	85	U	91	U	96	U	85	U
PCB-1016	UG/KG	PEST / PCB	91	U	85	U	91	U	96	U	85	U
PCB-1221	UG/KG	PEST / PCB	91	U	85	U	91	U	96	U	85	U
PCB-1232	UG/KG	PEST / PCB	91	U	85	U	91	U	96	U	85	U
PCB-1242	UG/KG	PEST / PCB	91	U	85	U	91	U	96	U	85	U
PCB-1248	UG/KG	PEST / PCB	91	U	85	U	91	U	96	U	85	U
PCB-1254	UG/KG	PEST / PCB	180	U	170	U	180	U	190	U	170	U
PCB-1260	UG/KG	PEST / PCB	180	U	170	U	180	U	190	U	170	U
TOXAPHENE	UG/KG	PEST / PCB	180	U	170	U	180	U	190	U	170	U
DIESEL	MG/KG	TPHC	10	U	10	U	10	U	680	2	10	U
JP4	MG/KG	TPHC	10	U	10	U	10	U	730	2	10	U
JP5	MG/KG	TPHC	10	U	10	U	10	U	650		10	U
DIESEL	UG/KG	TPHC										
JP4	UG/KG	TPHC										
JP5	UG/KG	TPHC										
1,1,1-TRICHLOROETHANE	UG/KG	VOA	6	U	5	U	6	U	30	U	5	U
1,1,2,2-TETRACHLOROETHANE	UG/KG	VOA	6	U	5	U	6	U	30	U	5	U
1,1,2-TRICHLOROETHANE	UG/KG	VOA	6	U	5	U	6	U	30	U	5	U
1,1-DICHLOROETHANE	UG/KG	VOA	6	U	5	U	6	U	30	U	5	U
1,1-DICHLOROETHENE	UG/KG	VOA	6	U	5	U	6	U	30	U	5	U
1,2-DICHLOROETHANE	UG/KG	VOA	6	U	5	U	6	U	30	U	5	U
1,2-DICHLOROETHENE (TOTAL)	UG/KG	VOA	6	U	5	U	6	U	30	U	5	U
1,2-DICHLOROPROPANE	UG/KG	VOA	6	U	5	U	6	U	30	U	5	U
2-BUTANONE	UG/KG	VOA	11	U	11	U	11	U	60	U	11	U
2-HEXANONE	UG/KG	VOA	11	U	11	U	11	U	60	U	11	U
4-METHYL-2-PENTANONE	UG/KG	VOA	11	U	11	U	11	U	60	U	11	U
ACETONE	UG/KG	VOA	17		11	U	32	U	73		14	U
BENZENE	UG/KG	VOA	6	U	5	U	6	U	30	U	5	U
BROMODICHLOROMETHANE	UG/KG	VOA	6	U	5	U	6	U	30	U	5	U
BROMOFORM	UG/KG	VOA	6	U	5	U	6	U	30	U	5	U
BROMOMETHANE	UG/KG	VOA	11	U	11	U	11	U	60	U	11	U
CARBON DISULFIDE	UG/KG	VOA	6	U	5	U	6	U	30	U	5	U
CARBON TETRACHLORIDE	UG/KG	VOA	6	U	5	U	6	U	30	U	5	U
CHLOROBENZENE	UG/KG	VOA	6	U	5	U	6	U	30	U	5	U

NAVSTA-SAN DIEGO
SITE 8 SOILS

		SAMPLE NUMBER:	NS8-BH1-S01-10		NS8-BH1-S02-5		NS8-BH2-S01-10		NS8-BH2-S02-15		NS8-BH3-S01-10	
		SAMPLING DATE:	01/30/91		01/30/91		01/30/91		01/30/91		02/01/91	
		BORING:	BH1		BH1		BH2		BH2		BH3	
		SITE:	NS8		NS8		NS8		NS8		NS8	
		DEPTH:	10		5		10		15		10	
COMPOUND NAME	UNITS	TEST CODE	RESULT	QUALIFIER	RESULT	QUALIFIER	RESULT	QUALIFIER	RESULT	QUALIFIER	RESULT	QUALIFIER
CHLOROETHANE	UG/KG	VOA	11	U	11	U	11	U	60	U	11	U
CHLOROFORM	UG/KG	VOA	6	U	5	U	6	U	30	U	5	U
CHLOROMETHANE	UG/KG	VOA	11	U	11	U	11	U	60	U	11	U
CIS-1,3-DICHLOROPROPENE	UG/KG	VOA	6	U	5	U	6	U	30	U	5	U
DIBROMOCHLOROMETHANE	UG/KG	VOA	6	U	5	U	6	U	30	U	5	U
ETHYLBENZENE	UG/KG	VOA	6	U	5	U	6	U	30	U	5	U
METHYLENE CHLORIDE	UG/KG	VOA	10	U	7	U	11	U	83	U	9	U
STYRENE	UG/KG	VOA	6	U	5	U	6	U	30	U	5	U
TETRACHLOROETHENE	UG/KG	VOA	6	U	5	U	6	U	30	U	5	U
TOLUENE	UG/KG	VOA	6	U	5	U	6	U	30	U	5	U
TRANS-1,3-DICHLOROPROPENE	UG/KG	VOA	6	U	5	U	6	U	30	U	5	U
TRICHLOROETHENE	UG/KG	VOA	6	U	5	U	6	U	30	U	5	U
VINYL ACETATE	UG/KG	VOA	11	U	11	U	11	U	60	U	11	U
VINYL CHLORIDE	UG/KG	VOA	11	U	11	U	11	U	60	U	11	U
XYLENES (TOTAL)	UG/KG	VOA	6	U	5	U	6	U	30	U	5	U

NAVSTA-SAN DIEGO
SITE 8 SOILS

		SAMPLE NUMBER:	NS8-BH3-S02-15		NS8-BH3-S04-10-FD		NS8-BH4-S01-5		NS8-BH4-S02-10		NS8-BH5-S01-5	
		SAMPLING DATE:	02/01/91		02/01/91		01/30/91		01/30/91		02/01/91	
		BORING:	BH3		BH3		BH4		BH4		BH5	
		SITE:	NS8		NS8		NS8		NS8		NS8	
		DEPTH:	15		10-FD		5		10		5	
COMPOUND NAME	UNITS	TEST CODE	RESULT	QUALIFIER	RESULT	QUALIFIER	RESULT	QUALIFIER	RESULT	QUALIFIER	RESULT	QUALIFIER
1,2,4-TRICHLOROBENZENE	UG/KG	BNA	470	U	360	U	400	U	380	U	350	U
1,2-DICHLOROBENZENE	UG/KG	BNA	470	U	360	U	400	U	380	U	350	U
1,3-DICHLOROBENZENE	UG/KG	BNA	470	U	360	U	400	U	380	U	350	U
1,4-DICHLOROBENZENE	UG/KG	BNA	470	U	360	U	400	U	380	U	350	U
2,4,5-TRICHLOROPHENOL	UG/KG	BNA	2300	U	1700	U	2000	U	1800	U	1700	U
2,4,6-TRICHLOROPHENOL	UG/KG	BNA	470	U	360	U	400	U	380	U	350	U
2,4-DICHLOROPHENOL	UG/KG	BNA	470	U	360	U	400	U	380	U	350	U
2,4-DIMETHYLPHENOL	UG/KG	BNA	470	U	360	U	400	U	380	U	350	U
2,4-DINITROPHENOL	UG/KG	BNA	2300	U	1700	U	2000	U	1800	U	1700	U
2,4-DINITROTOLUENE	UG/KG	BNA	470	U	360	U	400	U	380	U	350	U
2,6-DINITROTOLUENE	UG/KG	BNA	470	U	360	U	400	U	380	U	350	U
2-CHLORONAPHTHALENE	UG/KG	BNA	470	U	360	U	400	U	380	U	350	U
2-CHLOROPHENOL	UG/KG	BNA	470	U	360	U	400	U	380	U	350	U
2-METHYLNAPHTHALENE	UG/KG	BNA	470	U	360	U	400	U	380	U	350	U
2-METHYLPHENOL	UG/KG	BNA	470	U	360	U	400	U	380	U	350	U
2-NITROANILINE	UG/KG	BNA	2300	U	1700	U	2000	U	1800	U	1700	U
2-NITROPHENOL	UG/KG	BNA	470	U	360	U	400	U	380	U	350	U
3,3'-DICHLOROBENZIDINE	UG/KG	BNA	940	U	720	U	510	U	760	U	690	U
3-NITROANILINE	UG/KG	BNA	2300	U	1700	U	2000	U	1800	U	1700	U
4,6-DINITRO-2-METHYLPHENOL	UG/KG	BNA	2300	U	1700	U	2000	U	1800	U	1700	U
4-BROMOPHENYL-PHENYLETHER	UG/KG	BNA	470	U	360	U	400	U	380	U	350	U
4-CHLORO-3-METHYLPHENOL	UG/KG	BNA	470	U	360	U	400	U	380	U	350	U
4-CHLOROANILINE	UG/KG	BNA	470	U	360	U	400	U	380	U	350	U
4-CHLOROPHENYL-PHENYLETHER	UG/KG	BNA	470	U	360	U	400	U	380	U	350	U
4-METHYLPHENOL	UG/KG	BNA	470	U	360	U	400	U	380	U	350	U
4-NITROANILINE	UG/KG	BNA	2300	U	1700	U	2000	U	1800	U	1700	U
4-NITROPHENOL	UG/KG	BNA	2300	U	1700	U	2000	U	1800	U	1700	U
ACENAPHTHENE	UG/KG	BNA	470	U	360	U	400	U	380	U	350	U
ACENAPHTHYLENE	UG/KG	BNA	470	U	360	U	400	U	380	U	350	U
ANTHRACENE	UG/KG	BNA	470	U	360	U	400	U	380	U	350	U
BENZO(A)ANTHRACENE	UG/KG	BNA	470	U	360	U	400	U	380	U	350	U
BENZO(A)PYRENE	UG/KG	BNA	470	U	360	U	400	U	380	U	350	U
BENZO(B)FLUORANTHENE	UG/KG	BNA	470	U	360	U	400	U	380	U	350	U
BENZO(G,H,I)PERYLENE	UG/KG	BNA	470	U	360	U	400	U	380	U	350	U
BENZO(K)FLUORANTHENE	UG/KG	BNA	470	U	360	U	400	U	380	U	350	U
BENZOIC ACID	UG/KG	BNA	2300	U	1700	U	2000	U	1800	U	1700	U
BENZYL ALCOHOL	UG/KG	BNA	470	U	360	U	400	U	380	U	350	U
BIS(2-CHLOROETHOXY)METHANE	UG/KG	BNA	470	U	360	U	400	U	380	U	350	U
BIS(2-CHLOROETHYL)ETHER	UG/KG	BNA	470	U	360	U	400	U	380	U	350	U
BIS(2-CHLOROISOPROPYL)ETHER	UG/KG	BNA	470	U	360	U	400	U	380	U	350	U
BIS(2-ETHYLHEXYL)PHTHALATE	UG/KG	BNA	470	U	360	U	400	U	380	U	350	U
BUTYLBENZYLPHTHALATE	UG/KG	BNA	470	U	360	U	400	U	380	U	350	U
CHRYSENE	UG/KG	BNA	470	U	360	U	400	U	380	U	350	U
DI-N-BUTYLPHTHALATE	UG/KG	BNA	470	U	360	U	400	U	380	U	350	U
DI-N-OCTYLPHTHALATE	UG/KG	BNA	470	U	360	U	400	U	380	U	350	U
DIBENZ(A,H)ANTHRACENE	UG/KG	BNA	470	U	360	U	400	U	380	U	350	U
DIBENZOFURAN	UG/KG	BNA	470	U	360	U	400	U	380	U	350	U
DIETHYLPHTHALATE	UG/KG	BNA	470	U	360	U	400	U	380	U	350	U
DIMETHYLPHTHALATE	UG/KG	BNA	470	U	360	U	400	U	380	U	350	U
FLUORANTHENE	UG/KG	BNA	470	U	360	U	400	U	380	U	350	U
FLUORENE	UG/KG	BNA	470	U	360	U	400	U	380	U	350	U

NAVSTA-SAN DIEGO
SITE 8 SOILS

		SAMPLE NUMBER:	NS8-BH3-S02-15		NS8-BH3-S04-10-FD		NS8-BH4-S01-5		NS8-BH4-S02-10		NS8-BH5-S01-5	
		SAMPLING DATE:	02/01/91		02/01/91		01/30/91		01/30/91		02/01/91	
		BORING:	BH3		BH3		BH4		BH4		BH5	
		SITE:	NS8		NS8		NS8		NS8		NS8	
		DEPTH:	15		10-FD		5		10		5	
COMPOUND NAME	UNITS	TEST CODE	RESULT	QUALIFIER	RESULT	QUALIFIER	RESULT	QUALIFIER	RESULT	QUALIFIER	RESULT	QUALIFIER
HEXACHLOROBENZENE	UG/KG	BNA	470	U	360	U	400	U	380	U	350	U
HEXACHLOROBUTADIENE	UG/KG	BNA	470	U	360	U	400	U	380	U	350	U
HEXACHLOROCYCLOPENTADIENE	UG/KG	BNA	470	U	360	U	400	U	380	U	350	U
HEXACHLOROETHANE	UG/KG	BNA	470	U	360	U	400	U	380	U	350	U
INDENO(1,2,3-C,D)PYRENE	UG/KG	BNA	470	U	360	U	400	U	380	U	350	U
ISOPHORONE	UG/KG	BNA	470	U	360	U	400	U	380	U	350	U
N-NITROSO-DI-N-PROPYLAMINE	UG/KG	BNA	470	U	360	U	400	U	380	U	350	U
N-NITROSODIPHENYLAMINE (1)	UG/KG	BNA	470	U	360	U	400	U	380	U	350	U
NAPHTHALENE	UG/KG	BNA	470	U	360	U	400	U	380	U	350	U
NITROBENZENE	UG/KG	BNA	470	U	360	U	400	U	380	U	350	U
PENTACHLOROPHENOL	UG/KG	BNA	2300	U	1700	U	2000	U	1800	U	1700	U
PHENANTHRENE	UG/KG	BNA	470	U	360	U	400	U	380	U	350	U
PHENOL	UG/KG	BNA	470	U	360	U	400	U	380	U	350	U
PYRENE	UG/KG	BNA	470	U	360	U	400	U	380	U	350	U
ANTIMONY	MG/KG	CAC METALS	5.2	U	3.9	U	4.5	U	4.2	U	3.8	U
ARSENIC	MG/KG	CAC METALS	1.5	B	1.8	B	2.3	B	1.7	B	2.0	B
BARIUM	MG/KG	CAC METALS	9.2	U	15.8	B	117		24.3	B	6.0	U
BERYLLIUM	MG/KG	CAC METALS	0.27	U	0.27	B	1.4		0.38	B	0.29	B
CADMIUM	MG/KG	CAC METALS	1.1	U	0.81	U	0.94	U	0.88	U	0.80	U
CHROMIUM	MG/KG	CAC METALS	2.9		2.3		15.7		4.4		3.0	
COBALT	MG/KG	CAC METALS	1.4	U	1.5	B	9.1	B	2.1	B	1.2	B
COPPER	MG/KG	CAC METALS	28.4	U	43.5		15.3	U	3.1	U	1.2	U
LEAD	MG/KG	CAC METALS	2.0	U	1.3	U	4.2		2.2		0.79	U
MERCURY	MG/KG	CAC METALS	0.21	U	0.16	U	0.18	U	0.17	U	0.16	U
MOLYBDENUM	MG/KG	CAC METALS	1.9	U	1.4	U	1.6	U	1.5	U	1.4	U
NICKEL	MG/KG	CAC METALS	2.5	U	1.8	U	5.4	B	2.0	U	1.8	U
SELENIUM	MG/KG	CAC METALS	0.27	U	0.20	U	0.23	U	0.21	U	0.21	U
SILVER	MG/KG	CAC METALS	1.5	U	1.0	U	1.7	U	0.93	U	1.4	U
THALLIUM	MG/KG	CAC METALS	0.27	U	0.30	U	0.23	U	0.38	U	0.21	U
VANADIUM	MG/KG	CAC METALS	7.6	B	7.7	B	52.9		12.3		10.7	
ZINC	MG/KG	CAC METALS	11.0	U	18.1	U	37.6		16.7	U	12.0	U
ANTIMONY	UG/KG	CAC METALS										
ARSENIC	UG/KG	CAC METALS										
BARIUM	UG/KG	CAC METALS										
BERYLLIUM	UG/KG	CAC METALS										
CADMIUM	UG/KG	CAC METALS										
CHROMIUM	UG/KG	CAC METALS										
COBALT	UG/KG	CAC METALS										
COPPER	UG/KG	CAC METALS										
LEAD	UG/KG	CAC METALS										
MERCURY	UG/KG	CAC METALS										
MOLYBDENUM	UG/KG	CAC METALS										
NICKEL	UG/KG	CAC METALS										
SELENIUM	UG/KG	CAC METALS										
SILVER	UG/KG	CAC METALS										
THALLIUM	UG/KG	CAC METALS										
VANADIUM	UG/KG	CAC METALS										
ZINC	UG/KG	CAC METALS										
TOTAL CYANIDE	MG/KG	CN	1	UJ	1	UJ	1	UJ	1	UJ	1	UJ
TOTAL CYANIDE	MG/L	CN										
4,4'-DDD	*UG/KG*	*PEST / PCB*	23	U	17	U	20	U	18	U	17	U

NAVSTA-SAN DIEGO
SITE 8 SOILS

		SAMPLE NUMBER:	NS8-BH3-S02-15		NS8-BH3-S04-10-FD		NS8-BH4-S01-5		NS8-BH4-S02-10		NS8-BH5-S01-5	
		SAMPLING DATE:	02/01/91		02/01/91		01/30/91		01/30/91		02/01/91	
		BORING:	BH3		BH3		BH4		BH4		BH5	
		SITE:	NS8		NS8		NS8		NS8		NS8	
		DEPTH:	15		10-FD		5		10		5	
COMPOUND NAME	UNITS	TEST CODE	RESULT	QUALIFIER	RESULT	QUALIFIER	RESULT	QUALIFIER	RESULT	QUALIFIER	RESULT	QUALIFIER
4,4'-DDE	UG/KG	PEST / PCB	23	U	17	U	20	U	18	U	17	U
4,4'-DDT	UG/KG	PEST / PCB	23	U	17	U	20	U	18	U	17	U
ALDRIN	UG/KG	PEST / PCB	11	U	8.7	U	9.8	U	9.2	U	8.4	U
ALPHA-BHC	UG/KG	PEST / PCB	11	U	8.7	U	9.8	U	9.2	U	8.4	U
ALPHA-CHLORDANE	UG/KG	PEST / PCB	110	U	87	U	98	U	92	U	84	U
BETA-BHC	UG/KG	PEST / PCB	11	U	8.7	U	9.8	U	9.2	U	8.4	U
DELTA-BHC	UG/KG	PEST / PCB	11	U	8.7	U	9.8	U	9.2	U	8.4	U
DIELDRIN	UG/KG	PEST / PCB	23	U	17	U	20	U	18	U	17	U
ENDOSULFAN I	UG/KG	PEST / PCB	11	U	8.7	U	9.8	U	9.2	U	8.4	U
ENDOSULFAN II	UG/KG	PEST / PCB	23	U	17	U	20	U	18	U	17	U
ENDOSULFAN SULFATE	UG/KG	PEST / PCB	23	U	17	U	20	U	18	U	17	U
ENDRIN	UG/KG	PEST / PCB	23	U	17	U	20	U	18	U	17	U
ENDRIN KETONE	UG/KG	PEST / PCB	23	U	17	U	20	U	18	U	17	U
GAMMA-BHC (LINDANE)	UG/KG	PEST / PCB	11	U	8.7	U	9.8	U	9.2	U	8.4	U
GAMMA-CHLORDANE	UG/KG	PEST / PCB	110	U	87	U	98	U	92	U	84	U
HEPTACHLOR	UG/KG	PEST / PCB	11	U	8.7	U	9.8	U	9.2	U	8.4	U
HEPTACHLOR EPOXIDE	UG/KG	PEST / PCB	11	U	8.7	U	9.8	U	9.2	U	8.4	U
METHOXYCHLOR	UG/KG	PEST / PCB	110	U	87	U	98	U	92	U	84	U
PCB-1016	UG/KG	PEST / PCB	110	U	87	U	98	U	92	U	84	U
PCB-1221	UG/KG	PEST / PCB	110	U	87	U	98	U	92	U	84	U
PCB-1232	UG/KG	PEST / PCB	110	U	87	U	98	U	92	U	84	U
PCB-1242	UG/KG	PEST / PCB	110	U	87	U	98	U	92	U	84	U
PCB-1248	UG/KG	PEST / PCB	110	U	87	U	98	U	92	U	84	U
PCB-1254	UG/KG	PEST / PCB	230	U	170	U	200	U	180	U	170	U
PCB-1260	UG/KG	PEST / PCB	230	U	170	U	200	U	180	U	170	U
TOXAPHENE	UG/KG	PEST / PCB	230	U	170	U	200	U	180	U	170	U
DIESEL	MG/KG	TPHC	10	U	10	U	10	U	10	U	10	U
JP4	MG/KG	TPHC	10	U	10	U	10	U	10	U	10	U
JP5	MG/KG	TPHC	10	U	10	U	10	U	10	U	10	U
DIESEL	UG/KG	TPHC										
JP4	UG/KG	TPHC										
JP5	UG/KG	TPHC										
1,1,1-TRICHLOROETHANE	UG/KG	VOA	7	U	5	U	6	U	6	U	5	U
1,1,2,2-TETRACHLOROETHANE	UG/KG	VOA	7	U	5	U	6	U	6	U	5	U
1,1,2-TRICHLOROETHANE	UG/KG	VOA	7	U	5	U	6	U	6	U	5	U
1,1-DICHLOROETHANE	UG/KG	VOA	7	U	5	U	6	U	6	U	5	U
1,1-DICHLOROETHENE	UG/KG	VOA	7	U	5	U	6	U	6	U	5	U
1,2-DICHLOROETHANE	UG/KG	VOA	7	U	5	U	6	U	6	U	5	U
1,2-DICHLOROETHENE (TOTAL)	UG/KG	VOA	7	U	5	U	6	U	6	U	5	U
1,2-DICHLOROPROPANE	UG/KG	VOA	7	U	5	U	6	U	6	U	5	U
2-BUTANONE	UG/KG	VOA	14	U	11	U	12	U	11	U	11	U
2-HEXANONE	UG/KG	VOA	14	U	11	U	12	U	11	U	11	U
4-METHYL-2-PENTANONE	UG/KG	VOA	14	U	11	U	12	U	11	U	11	U
ACETONE	UG/KG	VOA	14	U	11	U	12	U	35	U	11	U
BENZENE	UG/KG	VOA	7	U	5	U	6	U	6	U	5	U
BROMODICHLOROMETHANE	UG/KG	VOA	7	U	5	U	6	U	6	U	5	U
BROMOFORM	UG/KG	VOA	7	U	5	U	6	U	6	U	5	U
BROMOMETHANE	UG/KG	VOA	14	U	11	U	12	U	11	U	11	U
CARBON DISULFIDE	UG/KG	VOA	7	U	5	U	6	U	6	U	5	U
CARBON TETRACHLORIDE	UG/KG	VOA	7	U	5	U	6	U	6	U	5	U
CHLOROBENZENE	UG/KG	VOA	7	U	5	U	6	U	6	U	5	U

NAVSTA-SAN DIEGO
SITE 8 SOILS

		SAMPLE NUMBER:	NS8-BH3-S02-15		NS8-BH3-S04-10-FD		NS8-BH4-S01-5		NS8-BH4-S02-10		NS8-BH5-S01-5	
		SAMPLING DATE:	02/01/91		02/01/91		01/30/91		01/30/91		02/01/91	
		BORING:	BH3		BH3		BH4		BH4		BH5	
		SITE:	NS8		NS8		NS8		NS8		NS8	
		DEPTH:	15		10-FD		5		10		5	
COMPOUND NAME	UNITS	TEST CODE	RESULT	QUALIFIER	RESULT	QUALIFIER	RESULT	QUALIFIER	RESULT	QUALIFIER	RESULT	QUALIFIER
CHLOROETHANE	UG/KG	VOA	14	U	11	U	12	U	11	U	11	U
CHLOROFORM	UG/KG	VOA	7	U	5	U	6	U	6	U	5	U
CHLOROMETHANE	UG/KG	VOA	14	U	11	U	12	U	11	U	11	U
CIS-1,3-DICHLOROPROPENE	UG/KG	VOA	7	U	5	U	6	U	6	U	5	U
DIBROMOCHLOROMETHANE	UG/KG	VOA	7	U	5	U	6	U	6	U	5	U
ETHYLBENZENE	UG/KG	VOA	7	U	5	U	6	U	6	U	5	U
METHYLENE CHLORIDE	UG/KG	VOA	10	U	16	U	9	U	7	U	8	U
STYRENE	UG/KG	VOA	7	U	5	U	6	U	6	U	5	U
TETRACHLOROETHENE	UG/KG	VOA	7	U	5	U	6	U	6	U	5	U
TOLUENE	UG/KG	VOA	7	U	5	U	6	U	6	U	5	U
TRANS-1,3-DICHLOROPROPENE	UG/KG	VOA	7	U	5	U	6	U	6	U	5	U
TRICHLOROETHENE	UG/KG	VOA	7	U	5	U	6	U	6	U	5	U
VINYL ACETATE	UG/KG	VOA	14	U	11	U	12	U	11	U	11	U
VINYL CHLORIDE	UG/KG	VOA	14	U	11	U	12	U	11	U	11	U
XYLENES (TOTAL)	UG/KG	VOA	7	U	5	U	6	U	6	U	5	U

NAVSTA-SAN DIEGO
SITE 8 SOILS

		SAMPLE NUMBER:	NS8-BH5-S02-10		NS8-ER-1-30-91		NS8-ER-2-1-91		NS8-ER-2-14-91		NS8-FB-2-1-91	
		SAMPLING DATE:	02/01/91		01/30/91		02/01/91		02/14/91		02/01/91	
		BORING:	BH5		ER		ER		ER		FB	
		SITE:	NS8		NS8		NS8		NS8		NS8	
		DEPTH:	10		30-91		1-91		14-91		1-91	
COMPOUND NAME	UNITS	TEST CODE	RESULT	QUALIFIER	RESULT	QUALIFIER	RESULT	QUALIFIER	RESULT	QUALIFIER	RESULT	QUALIFIER
1,2,4-TRICHLOROBENZENE	UG/KG	BNA	370	U	10	U	10	U	10	U	10	U
1,2-DICHLOROBENZENE	UG/KG	BNA	370	U	10	U	10	U	10	U	10	U
1,3-DICHLOROBENZENE	UG/KG	BNA	370	U	10	U	10	U	10	U	10	U
1,4-DICHLOROBENZENE	UG/KG	BNA	370	U	10	U	10	U	10	U	10	U
2,4,5-TRICHLOROPHENOL	UG/KG	BNA	1800	U	50	U	50	U	50	U	50	U
2,4,6-TRICHLOROPHENOL	UG/KG	BNA	370	U	10	U	10	U	10	U	10	U
2,4-DICHLOROPHENOL	UG/KG	BNA	370	U	10	U	10	U	10	U	10	U
2,4-DIMETHYLPHENOL	UG/KG	BNA	370	U	10	U	10	U	10	U	10	U
2,4-DINITROPHENOL	UG/KG	BNA	1800	U	50	U	50	U	50	U	50	U
2,4-DINITROTOLUENE	UG/KG	BNA	370	U	10	U	10	U	10	U	10	U
2,6-DINITROTOLUENE	UG/KG	BNA	370	U	10	U	10	U	10	U	10	U
2-CHLORONAPHTHALENE	UG/KG	BNA	370	U	10	U	10	U	10	U	10	U
2-CHLOROPHENOL	UG/KG	BNA	370	U	10	U	10	U	10	U	10	U
2-METHYLNAPHTHALENE	UG/KG	BNA	370	U	10	U	10	U	10	U	10	U
2-METHYLPHENOL	UG/KG	BNA	370	U	10	U	10	U	10	U	10	U
2-NITROANILINE	UG/KG	BNA	1800	U	50	U	50	U	50	U	50	U
2-NITROPHENOL	UG/KG	BNA	370	U	10	U	10	U	10	U	10	U
3,3'-DICHLOROBENZIDINE	UG/KG	BNA	740	U	20	U	20	U	20	U	20	U
3-NITROANILINE	UG/KG	BNA	1800	U	50	U	50	U	50	U	50	U
4,6-DINITRO-2-METHYLPHENOL	UG/KG	BNA	1800	U	50	U	50	U	50	U	50	U
4-BROMOPHENYL-PHENYLETHER	UG/KG	BNA	370	U	10	U	10	U	10	U	10	U
4-CHLORO-3-METHYLPHENOL	UG/KG	BNA	370	U	10	U	10	U	10	U	10	U
4-CHLOROANILINE	UG/KG	BNA	370	U	10	U	10	U	10	U	10	U
4-CHLOROPHENYL-PHENYLETHER	UG/KG	BNA	370	U	10	U	10	U	10	U	10	U
4-METHYLPHENOL	UG/KG	BNA	370	U	10	U	10	U	10	U	10	U
4-NITROANILINE	UG/KG	BNA	1800	U	50	U	50	U	50	U	50	U
4-NITROPHENOL	UG/KG	BNA	1800	U	50	U	50	U	50	U	50	U
ACENAPHTHENE	UG/KG	BNA	370	U	10	U	10	U	10	U	10	U
ACENAPHTHYLENE	UG/KG	BNA	370	U	10	U	10	U	10	U	10	U
ANTHRACENE	UG/KG	BNA	370	U	10	U	10	U	10	U	10	U
BENZO(A)ANTHRACENE	UG/KG	BNA	370	U	10	U	10	U	10	U	10	U
BENZO(A)PYRENE	UG/KG	BNA	370	U	10	U	10	U	10	U	10	U
BENZO(B)FLUORANTHENE	UG/KG	BNA	370	U	10	U	10	U	10	U	10	U
BENZO(G,H,I)PERYLENE	UG/KG	BNA	370	U	10	U	10	U	10	U	10	U
BENZO(K)FLUORANTHENE	UG/KG	BNA	370	U	10	U	10	U	10	U	10	U
BENZOIC ACID	UG/KG	BNA	1800	U	50	U	50	U	50	U	50	U
BENZYL ALCOHOL	UG/KG	BNA	370	U	10	U	10	U	10	U	10	U
BIS(2-CHLOROETHOXY)METHANE	UG/KG	BNA	370	U	10	U	10	U	10	U	10	U
BIS(2-CHLOROETHYL)ETHER	UG/KG	BNA	370	U	10	U	10	U	10	U	10	U
BIS(2-CHLOROISOPROPYL)ETHER	UG/KG	BNA	370	U	10	U	10	U	10	U	10	U
BIS(2-ETHYLHEXYL)PHTHALATE	UG/KG	BNA	370	U	10	U	10	U	10	U	10	U
BUTYLBENZYLPHTHALATE	UG/KG	BNA	370	U	10	U	10	U	10	U	10	U
CHRYSENE	UG/KG	BNA	370	U	10	U	10	U	10	U	10	U
DI-N-BUTYLPHTHALATE	UG/KG	BNA	370	U	10	U	10	U	10	U	10	U
DI-N-OCTYLPHTHALATE	UG/KG	BNA	370	U	10	U	10	U	10	U	10	U
DIBENZ(A,H)ANTHRACENE	UG/KG	BNA	370	U	10	U	10	U	10	U	10	U
DIBENZOFURAN	UG/KG	BNA	370	U	10	U	10	U	10	U	10	U
DIETHYLPHTHALATE	UG/KG	BNA	370	U	10	U	10	U	10	U	10	U
DIMETHYLPHTHALATE	UG/KG	BNA	370	U	10	U	10	U	10	U	10	U
FLUORANTHENE	UG/KG	BNA	370	U	10	U	10	U	10	U	10	U
FLUORENE	UG/KG	BNA	370	U	10	U	10	U	10	U	10	U

NAVSTA-SAN DIEGO
SITE 8 SOILS

		SAMPLE NUMBER:	NS8-BH5-S02-10		NS8-ER-1-30-91		NS8-ER-2-1-91		NS8-ER-2-14-91		NS8-FB-2-1-91	
		SAMPLING DATE:	02/01/91		01/30/91		02/01/91		02/14/91		02/01/91	
		BORING:	BH5		ER		ER		ER		FB	
		SITE:	NS8		NS8		NS8		NS8		NS8	
		DEPTH:	10		30-91		1-91		14-91		1-91	
COMPOUND NAME	UNITS	TEST CODE	RESULT	QUALIFIER	RESULT	QUALIFIER	RESULT	QUALIFIER	RESULT	QUALIFIER	RESULT	QUALIFIER
HEXACHLOROBENZENE	UG/KG	BNA	370	U	10	U	10	U	10	U	10	U
HEXACHLOROBUTADIENE	UG/KG	BNA	370	U	10	U	10	U	10	U	10	U
HEXACHLOROCYCLOPENTADIENE	UG/KG	BNA	370	U	10	U	10	U	10	U	10	U
HEXACHLOROETHANE	UG/KG	BNA	370	U	10	U	10	U	10	U	10	U
INDENO(1,2,3-C,D)PYRENE	UG/KG	BNA	370	U	10	U	10	U	10	U	10	U
ISOPHORONE	UG/KG	BNA	370	U	10	U	10	U	10	U	10	U
N-NITROSO-DI-N-PROPYLAMINE	UG/KG	BNA	370	U	10	U	10	U	10	U	10	U
N-NITROSODIPHENYLAMINE (1)	UG/KG	BNA	370	U	10	U	10	U	10	U	10	U
NAPHTHALENE	UG/KG	BNA	370	U	10	U	10	U	10	U	10	U
NITROBENZENE	UG/KG	BNA	370	U	10	U	10	U	10	U	10	U
PENTACHLOROPHENOL	UG/KG	BNA	1800	U	50	U	50	U	50	U	50	U
PHENANTHRENE	UG/KG	BNA	370	U	10	U	10	U	10	U	10	U
PHENOL	UG/KG	BNA	370	U	10	U	10	U	10	U	10	U
PYRENE	UG/KG	BNA	370	U	10	U	10	U	10	U	10	U
ANTIMONY	MG/KG	CAC METALS	4.2	U								
ARSENIC	MG/KG	CAC METALS	0.53	B								
BARIUM	MG/KG	CAC METALS	27.7	B								
BERYLLIUM	MG/KG	CAC METALS	1.1	B								
CADMIUM	MG/KG	CAC METALS	0.88	U								
CHROMIUM	MG/KG	CAC METALS	7.7									
COBALT	MG/KG	CAC METALS	3.7	B								
COPPER	MG/KG	CAC METALS	14.1	U								
LEAD	MG/KG	CAC METALS	2.7									
MERCURY	MG/KG	CAC METALS	0.17	U								
MOLYBDENUM	MG/KG	CAC METALS	1.5	U								
NICKEL	MG/KG	CAC METALS	2.0	U								
SELENIUM	MG/KG	CAC METALS	0.21	U								
SILVER	MG/KG	CAC METALS	1.5	U								
THALLIUM	MG/KG	CAC METALS	0.34	U								
VANADIUM	MG/KG	CAC METALS	23.0									
ZINC	MG/KG	CAC METALS	28.6	U								
ANTIMONY	UG/KG	CAC METALS			19.0	U	19.0	U	19.0	U	19.0	U
ARSENIC	UG/KG	CAC METALS			2.0	U	2.0	U	1.0	U	2.0	U
BARIUM	UG/KG	CAC METALS			6.1	B	6.6	B	7.3	B	5.7	B
BERYLLIUM	UG/KG	CAC METALS			1.0	U	1.0	U	1.0	U	1.0	U
CADMIUM	UG/KG	CAC METALS			4.0	U	4.0	U	4.0	U	4.0	U
CHROMIUM	UG/KG	CAC METALS			4.0	U	4.0	U	4.0	U	4.0	U
COBALT	UG/KG	CAC METALS			5.0	U	5.0	U	5.0	U	5.0	U
COPPER	UG/KG	CAC METALS			13.8	B	17.9	B	8.2	B	33.3	
LEAD	UG/KG	CAC METALS			1.0	B	1.8	B	1.0	U	2.0	B
MERCURY	UG/KG	CAC METALS			0.20	U	0.20	U	0.20	U	0.20	U
MOLYBDENUM	UG/KG	CAC METALS			7.0	U	7.0	U	7.0	U	7.0	U
NICKEL	UG/KG	CAC METALS			9.0	U	9.0	U	9.0	U	9.0	U
SELENIUM	UG/KG	CAC METALS			1.0	U	1.0	U	1.0	U	1.0	U
SILVER	UG/KG	CAC METALS			4.3	B	4.3	B	3.0	U	4.3	B
THALLIUM	UG/KG	CAC METALS			1.0	U	1.0	U	1.0	U	1.0	U
VANADIUM	UG/KG	CAC METALS			3.6	B	3.6	B	15.5	B	4.1	B
ZINC	UG/KG	CAC METALS			26.5		29.8		9.0	B	22.3	
TOTAL CYANIDE	MG/KG	CN	1	UJ								
TOTAL CYANIDE	MG/L	CN			0.02	UJ	0.02	UJ			0.02	UJ
4,4'-DDD	UG/KG	PEST / PCB	18	U	0.1	U	0.50	U	0.10	U	0.50	U

NAVSTA-SAN DIEGO
SITE 8 SOILS

		SAMPLE NUMBER:	NS8-BH5-S02-10		NS8-ER-1-30-91		NS8-ER-2-1-91		NS8-ER-2-14-91		NS8-FB-2-1-91	
		SAMPLING DATE:	02/01/91		01/30/91		02/01/91		02/14/91		02/01/91	
		BORING:	BH5		ER		ER		ER		FB	
		SITE:	NS8		NS8		NS8		NS8		NS8	
		DEPTH:	10		30-91		1-91		14-91		1-91	
COMPOUND NAME	UNITS	TEST CODE	RESULT	QUALIFIER	RESULT	QUALIFIER	RESULT	QUALIFIER	RESULT	QUALIFIER	RESULT	QUALIFIER
4,4'-DDE	UG/KG	PEST / PCB	18	U	0.1	U	0.50	U	0.10	U	0.50	U
4,4'-DDT	UG/KG	PEST / PCB	18	U	0.1	U	0.50	U	0.10	U	0.50	U
ALDRIN	UG/KG	PEST / PCB	9	U	0.05	U	0.25	U	0.05	U	0.25	U
ALPHA-BHC	UG/KG	PEST / PCB	9	U	0.05	U	0.25	U	0.05	U	0.25	U
ALPHA-CHLORDANE	UG/KG	PEST / PCB	90	U	0.5	U	2.50	U	0.50	U	2.50	U
BETA-BHC	UG/KG	PEST / PCB	9	U	0.05	U	0.25	U	0.05	U	0.25	U
DELTA-BHC	UG/KG	PEST / PCB	9	U	0.05	U	0.25	U	0.05	U	0.25	U
DIELDRIN	UG/KG	PEST / PCB	18	U	0.1	U	0.50	U	0.10	U	0.50	U
ENDOSULFAN I	UG/KG	PEST / PCB	9	U	0.05	U	0.25	U	0.05	U	0.25	U
ENDOSULFAN II	UG/KG	PEST / PCB	18	U	0.1	U	0.50	U	0.10	U	0.50	U
ENDOSULFAN SULFATE	UG/KG	PEST / PCB	18	U	0.1	U	0.50	U	0.10	U	0.50	U
ENDRIN	UG/KG	PEST / PCB	18	U	0.1	U	0.50	U	0.10	U	0.50	U
ENDRIN KETONE	UG/KG	PEST / PCB	18	U	0.1	U	0.50	U	0.10	U	0.50	U
GAMMA-BHC (LINDANE)	UG/KG	PEST / PCB	9	U	0.05	U	0.25	U	0.05	U	0.25	U
GAMMA-CHLORDANE	UG/KG	PEST / PCB	90	U	0.5	U	2.50	U	0.50	U	2.50	U
HEPTACHLOR	UG/KG	PEST / PCB	9	U	0.05	U	0.25	U	0.05	U	0.25	U
HEPTACHLOR EPOXIDE	UG/KG	PEST / PCB	9	U	0.05	U	0.25	U	0.05	U	0.25	U
METHOXYCHLOR	UG/KG	PEST / PCB	90	U	0.5	U	2.50	U	0.50	U	2.50	U
PCB-1016	UG/KG	PEST / PCB	90	U	0.5	U	2.50	U	0.50	U	2.50	U
PCB-1221	UG/KG	PEST / PCB	90	U	0.5	U	2.50	U	0.50	U	2.50	U
PCB-1232	UG/KG	PEST / PCB	90	U	0.5	U	2.50	U	0.50	U	2.50	U
PCB-1242	UG/KG	PEST / PCB	90	U	0.5	U	2.50	U	0.50	U	2.50	U
PCB-1248	UG/KG	PEST / PCB	90	U	0.5	U	2.50	U	0.50	U	2.50	U
PCB-1254	UG/KG	PEST / PCB	180	U	1	U	5.00	U	1.00	U	5.00	U
PCB-1260	UG/KG	PEST / PCB	180	U	1	U	5.00	U	1.00	U	5.00	U
TOXAPHENE	UG/KG	PEST / PCB	180	U	1	U	5.00	U	1.00	U	5.00	U
DIESEL	MG/KG	TPHC	10	U								
JP4	MG/KG	TPHC	10	U								
JP5	MG/KG	TPHC	10	U								
DIESEL	UG/KG	TPHC			250	U	250	U	250	U	250	U
JP4	UG/KG	TPHC			250	U	250	U	250	U	250	U
JP5	UG/KG	TPHC			250	U	250	U	250	U	250	U
1,1,1-TRICHLOROETHANE	UG/KG	VOA	6	U	5	U	5	U	5	U	5	U
1,1,2,2-TETRACHLOROETHANE	UG/KG	VOA	6	U	5	U	5	U	5	U	5	U
1,1,2-TRICHLOROETHANE	UG/KG	VOA	6	U	5	U	5	U	5	U	5	U
1,1-DICHLOROETHANE	UG/KG	VOA	6	U	5	U	5	U	5	U	5	U
1,1-DICHLOROETHENE	UG/KG	VOA	6	U	5	U	5	U	5	U	5	U
1,2-DICHLOROETHANE	UG/KG	VOA	6	U	5	U	5	U	5	U	5	U
1,2-DICHLOROETHENE (TOTAL)	UG/KG	VOA	6	U	5	U	5	U	5	U	5	U
1,2-DICHLOROPROPANE	UG/KG	VOA	6	U	5	U	5	U	5	U	5	U
2-BUTANONE	UG/KG	VOA	11	U	10	U	10	U	10	U	10	U
2-HEXANONE	UG/KG	VOA	11	U	10	U	10	U	10	U	10	U
4-METHYL-2-PENTANONE	UG/KG	VOA	11	U	10	U	10	U	10	U	10	U
ACETONE	UG/KG	VOA	11	U	12		4	J	10	U	13	
BENZENE	UG/KG	VOA	6	U	5	U	5	U	5	U	5	U
BROMODICHLOROMETHANE	UG/KG	VOA	6	U	5		12		4	J	5	
BROMOFORM	UG/KG	VOA	6	U	5	U	5		5	U	2	J
BROMOMETHANE	UG/KG	VOA	11	U	10	U	10	U	10	U	10	U
CARBON DISULFIDE	UG/KG	VOA	6	U	5	U	5	U	5	U	5	U
CARBON TETRACHLORIDE	UG/KG	VOA	6	U	5	U	5	U	5	U	5	U
CHLOROBENZENE	UG/KG	VOA	6	U	5	U	5	U	5	U	5	U

NAVSTA-SAN DIEGO
SITE 8 SOILS

		SAMPLE NUMBER:	NS8-BH5-S02-10		NS8-ER-1-30-91		NS8-ER-2-1-91		NS8-ER-2-14-91		NS8-FB-2-1-91	
		SAMPLING DATE:	02/01/91		01/30/91		02/01/91		02/14/91		02/01/91	
		BORING:	BH5		ER		ER		ER		FB	
		SITE:	NS8		NS8		NS8		NS8		NS8	
		DEPTH:	10		30-91		1-91		14-91		1-91	
COMPOUND NAME	UNITS	TEST CODE	RESULT	QUALIFIER	RESULT	QUALIFIER	RESULT	QUALIFIER	RESULT	QUALIFIER	RESULT	QUALIFIER
CHLOROETHANE	UG/KG	VOA	11	U	10	U	10	U	10	U	10	U
CHLOROFORM	UG/KG	VOA	6	U	10		11		13		7	
CHLOROMETHANE	UG/KG	VOA	11	U	10	U	10	U	10	U	10	U
CIS-1,3-DICHLOROPROPENE	UG/KG	VOA	6	U	5	U	5	U	5	U	5	U
DIBROMOCHLOROMETHANE	UG/KG	VOA	6	U	4	J	15		3	J	7	
ETHYLBENZENE	UG/KG	VOA	6	U	5	U	5	U	5	U	5	U
METHYLENE CHLORIDE	UG/KG	VOA	7	U	4	BJ	2	BJ	2	BJ	3	BJ
STYRENE	UG/KG	VOA	6	U	5	U	5	U	5	U	5	U
TETRACHLOROETHENE	UG/KG	VOA	6	U	5	U	5	U	5	U	5	U
TOLUENE	UG/KG	VOA	6	U	5	U	5	U	5	U	5	U
TRANS-1,3-DICHLOROPROPENE	UG/KG	VOA	6	U	5	U	5	U	5	U	5	U
TRICHLOROETHENE	UG/KG	VOA	6	U	5	U	5	U	5	U	5	U
VINYL ACETATE	UG/KG	VOA	11	U	10	U	10	U	10	U	10	U
VINYL CHLORIDE	UG/KG	VOA	11	U	10	U	10	U	10	U	10	U
XYLENES (TOTAL)	UG/KG	VOA	6	U	5	U	5	U	5	U	5	U

NAVSTA-SAN DIEGO
SITE 8 SOILS

		SAMPLE NUMBER:	NS8-TB-1-30-91		NS8-TB-2-1-91	
		SAMPLING DATE:	01/30/91		02/01/91	
		BORING:	TB		TB	
		SITE:	NS8		NS8	
		DEPTH:	30-91		1-91	
COMPOUND NAME	UNITS	TEST CODE	RESULT	QUALIFIER	RESULT	QUALIFIER
1,2,4-TRICHLOROBENZENE	UG/KG	BNA				
1,2-DICHLOROBENZENE	UG/KG	BNA				
1,3-DICHLOROBENZENE	UG/KG	BNA				
1,4-DICHLOROBENZENE	UG/KG	BNA				
2,4,5-TRICHLOROPHENOL	UG/KG	BNA				
2,4,6-TRICHLOROPHENOL	UG/KG	BNA				
2,4-DICHLOROPHENOL	UG/KG	BNA				
2,4-DIMETHYLPHENOL	UG/KG	BNA				
2,4-DINITROPHENOL	UG/KG	BNA				
2,4-DINITROTOLUENE	UG/KG	BNA				
2,6-DINITROTOLUENE	UG/KG	BNA				
2-CHLORONAPHTHALENE	UG/KG	BNA				
2-CHLOROPHENOL	UG/KG	BNA				
2-METHYLNAPHTHALENE	UG/KG	BNA				
2-METHYLPHENOL	UG/KG	BNA				
2-NITROANILINE	UG/KG	BNA				
2-NITROPHENOL	UG/KG	BNA				
3,3'-DICHLOROBENZIDINE	UG/KG	BNA				
3-NITROANILINE	UG/KG	BNA				
4,6-DINITRO-2-METHYLPHENOL	UG/KG	BNA				
4-BROMOPHENYL-PHENYLETHER	UG/KG	BNA				
4-CHLORO-3-METHYLPHENOL	UG/KG	BNA				
4-CHLOROANILINE	UG/KG	BNA				
4-CHLOROPHENYL-PHENYLETHER	UG/KG	BNA				
4-METHYLPHENOL	UG/KG	BNA				
4-NITROANILINE	UG/KG	BNA				
4-NITROPHENOL	UG/KG	BNA				
ACENAPHTHENE	UG/KG	BNA				
ACENAPHTHYLENE	UG/KG	BNA				
ANTHRACENE	UG/KG	BNA				
BENZO(A)ANTHRACENE	UG/KG	BNA				
BENZO(A)PYRENE	UG/KG	BNA				
BENZO(B)FLUORANTHENE	UG/KG	BNA				
BENZO(G,H,I)PERYLENE	UG/KG	BNA				
BENZO(K)FLUORANTHENE	UG/KG	BNA				
BENZOIC ACID	UG/KG	BNA				
BENZYL ALCOHOL	UG/KG	BNA				
BIS(2-CHLOROETHOXY)METHANE	UG/KG	BNA				
BIS(2-CHLOROETHYL)ETHER	UG/KG	BNA				
BIS(2-CHLOROISOPROPYL)ETHER	UG/KG	BNA				
BIS(2-ETHYLHEXYL)PHTHALATE	UG/KG	BNA				
BUTYLBENZYLPHTHALATE	UG/KG	BNA				
CHRYSENE	UG/KG	BNA				
DI-N-BUTYLPHTHALATE	UG/KG	BNA				
DI-N-OCTYLPHTHALATE	UG/KG	BNA				
DIBENZ(A,H)ANTHRACENE	UG/KG	BNA				
DIBENZOFURAN	UG/KG	BNA				
DIETHYLPHTHALATE	UG/KG	BNA				
DIMETHYLPHTHALATE	UG/KG	BNA				
FLUORANTHENE	UG/KG	BNA				
FLUORENE	UG/KG	BNA				

NAVSTA-SAN DIEGO
SITE 8 SOILS

		SAMPLE NUMBER:	NS8-TB-1-30-91		NS8-TB-2-1-91	
		SAMPLING DATE:	01/30/91		02/01/91	
		BORING:	TB		TB	
		SITE:	NS8		NS8	
		DEPTH:	30-91		1-91	
COMPOUND NAME	UNITS	TEST CODE	RESULT	QUALIFIER	RESULT	QUALIFIER
HEXACHLOROBENZENE	UG/KG	BNA				
HEXACHLOROBUTADIENE	UG/KG	BNA				
HEXACHLOROCYCLOPENTADIENE	UG/KG	BNA				
HEXACHLOROETHANE	UG/KG	BNA				
INDENO(1,2,3-C,D)PYRENE	UG/KG	BNA				
ISOPHORONE	UG/KG	BNA				
N-NITROSO-DI-N-PROPYLAMINE	UG/KG	BNA				
N-NITROSODIPHENYLAMINE (1)	UG/KG	BNA				
NAPHTHALENE	UG/KG	BNA				
NITROBENZENE	UG/KG	BNA				
PENTACHLOROPHENOL	UG/KG	BNA				
PHENANTHRENE	UG/KG	BNA				
PHENOL	UG/KG	BNA				
PYRENE	UG/KG	BNA				
ANTIMONY	MG/KG	CAC METALS				
ARSENIC	MG/KG	CAC METALS				
BARIUM	MG/KG	CAC METALS				
BERYLLIUM	MG/KG	CAC METALS				
CADMIUM	MG/KG	CAC METALS				
CHROMIUM	MG/KG	CAC METALS				
COBALT	MG/KG	CAC METALS				
COPPER	MG/KG	CAC METALS				
LEAD	MG/KG	CAC METALS				
MERCURY	MG/KG	CAC METALS				
MOLYBDENUM	MG/KG	CAC METALS				
NICKEL	MG/KG	CAC METALS				
SELENIUM	MG/KG	CAC METALS				
SILVER	MG/KG	CAC METALS				
THALLIUM	MG/KG	CAC METALS				
VANADIUM	MG/KG	CAC METALS				
ZINC	MG/KG	CAC METALS				
ANTIMONY	UG/KG	CAC METALS				
ARSENIC	UG/KG	CAC METALS				
BARIUM	UG/KG	CAC METALS				
BERYLLIUM	UG/KG	CAC METALS				
CADMIUM	UG/KG	CAC METALS				
CHROMIUM	UG/KG	CAC METALS				
COBALT	UG/KG	CAC METALS				
COPPER	UG/KG	CAC METALS				
LEAD	UG/KG	CAC METALS				
MERCURY	UG/KG	CAC METALS				
MOLYBDENUM	UG/KG	CAC METALS				
NICKEL	UG/KG	CAC METALS				
SELENIUM	UG/KG	CAC METALS				
SILVER	UG/KG	CAC METALS				
THALLIUM	UG/KG	CAC METALS				
VANADIUM	UG/KG	CAC METALS				
ZINC	UG/KG	CAC METALS				
TOTAL CYANIDE	MG/KG	CN				
TOTAL CYANIDE	MG/L	CN				
4,4'-DDD	UG/KG	PEST / PCB				

NAVSTA-SAN DIEGO
SITE 8 SOILS

		SAMPLE NUMBER:	NS8-TB-1-30-91		NS8-TB-2-1-91	
		SAMPLING DATE:	01/30/91		02/01/91	
		BORING:	TB		TB	
		SITE:	NS8		NS8	
		DEPTH:	30-91		1-91	
COMPOUND NAME	UNITS	TEST CODE	RESULT	QUALIFIER	RESULT	QUALIFIER
4,4'-DDE	UG/KG	PEST / PCB				
4,4'-DDT	UG/KG	PEST / PCB				
ALDRIN	UG/KG	PEST / PCB				
ALPHA-BHC	UG/KG	PEST / PCB				
ALPHA-CHLORDANE	UG/KG	PEST / PCB				
BETA-BHC	UG/KG	PEST / PCB				
DELTA-BHC	UG/KG	PEST / PCB				
DIELDRIN	UG/KG	PEST / PCB				
ENDOSULFAN I	UG/KG	PEST / PCB				
ENDOSULFAN II	UG/KG	PEST / PCB				
ENDOSULFAN SULFATE	UG/KG	PEST / PCB				
ENDRIN	UG/KG	PEST / PCB				
ENDRIN KETONE	UG/KG	PEST / PCB				
GAMMA-BHC (LINDANE)	UG/KG	PEST / PCB				
GAMMA-CHLORDANE	UG/KG	PEST / PCB				
HEPTACHLOR	UG/KG	PEST / PCB				
HEPTACHLOR EPOXIDE	UG/KG	PEST / PCB				
METHOXYCHLOR	UG/KG	PEST / PCB				
PCB-1016	UG/KG	PEST / PCB				
PCB-1221	UG/KG	PEST / PCB				
PCB-1232	UG/KG	PEST / PCB				
PCB-1242	UG/KG	PEST / PCB				
PCB-1248	UG/KG	PEST / PCB				
PCB-1254	UG/KG	PEST / PCB				
PCB-1260	UG/KG	PEST / PCB				
TOXAPHENE	UG/KG	PEST / PCB				
DIESEL	MG/KG	TPHC				
JP4	MG/KG	TPHC				
JP5	MG/KG	TPHC				
DIESEL	UG/KG	TPHC				
JP4	UG/KG	TPHC				
JP5	UG/KG	TPHC				
1,1,1-TRICHLOROETHANE	UG/KG	VOA	5	U	5	U
1,1,2,2-TETRACHLOROETHANE	UG/KG	VOA	5	U	5	U
1,1,2-TRICHLOROETHANE	UG/KG	VOA	5	U	5	U
1,1-DICHLOROETHANE	UG/KG	VOA	5	U	5	U
1,1-DICHLOROETHENE	UG/KG	VOA	5	U	5	U
1,2-DICHLOROETHANE	UG/KG	VOA	5	U	5	U
1,2-DICHLOROETHENE (TOTAL)	UG/KG	VOA	5	U	5	U
1,2-DICHLOROPROPANE	UG/KG	VOA	5	U	5	U
2-BUTANONE	UG/KG	VOA	10	U	10	U
2-HEXANONE	UG/KG	VOA	10	U	10	U
4-METHYL-2-PENTANONE	UG/KG	VOA	10	U	10	U
ACETONE	UG/KG	VOA	10	U	10	U
BENZENE	UG/KG	VOA	5	U	5	U
BROMODICHLOROMETHANE	UG/KG	VOA	5	U	5	U
BROMOFORM	UG/KG	VOA	5	U	5	U
BROMOMETHANE	UG/KG	VOA	10	U	10	U
CARBON DISULFIDE	UG/KG	VOA	5	U	5	U
CARBON TETRACHLORIDE	UG/KG	VOA	5	U	5	U
CHLOROBENZENE	*UG/KG*	*VOA*	5	U	5	U

NAVSTA-SAN DIEGO
SITE 8 SOILS

		SAMPLE NUMBER:	NS8-TB-1-30-91		NS8-TB-2-1-91	
		SAMPLING DATE:	01/30/91		02/01/91	
		BORING:	TB		TB	
		SITE:	NS8		NS8	
		DEPTH:	30-91		1-91	
COMPOUND NAME	UNITS	TEST CODE	RESULT	QUALIFIER	RESULT	QUALIFIER
CHLOROETHANE	UG/KG	VOA	10	U	10	U
CHLOROFORM	UG/KG	VOA	5	U	5	U
CHLOROMETHANE	UG/KG	VOA	10	U	10	U
CIS-1,3-DICHLOROPROPENE	UG/KG	VOA	5	U	5	U
DIBROMOCHLOROMETHANE	UG/KG	VOA	5	U	5	U
ETHYLBENZENE	UG/KG	VOA	5	U	5	U
METHYLENE CHLORIDE	UG/KG	VOA	4	BJ	4	BJ
STYRENE	UG/KG	VOA	5	U	5	U
TETRACHLOROETHENE	UG/KG	VOA	5	U	5	U
TOLUENE	UG/KG	VOA	5	U	5	U
TRANS-1,3-DICHLOROPROPENE	UG/KG	VOA	5	U	5	U
TRICHLOROETHENE	UG/KG	VOA	5	U	5	U
VINYL ACETATE	UG/KG	VOA	10	U	10	U
VINYL CHLORIDE	UG/KG	VOA	10	U	10	U
XYLENES (TOTAL)	UG/KG	VOA	5	U	5	U

GROUNDWATER

NAVSTA-SAN DIEGO
SITE 3 WATER

		SAMPLE NUMBER:	NS3-FB-2-14-91		NS3-MW3-GW1		NS3-MW4-GW1		NS3-MW5-GW1		NS3-TB-2-14-91	
		SAMPLING DATE:	02/14/91		02/14/91		02/14/91		02/13/91		02/14/91	
		BORING:	FB		MW3		MW4		MW5		TB	
		SITE:	NS3		NS3		NS3		NS3		NS3	
		DEPTH:	14-91		NS3-MW3-GW1		NS3-MW4-GW1		NS3-MW5-GW1		14-91	
COMPOUND NAME	UNITS	TEST CODE	RESULT	QUALIFIER	RESULT	QUALIFIER	RESULT	QUALIFIER	RESULT	QUALIFIER	RESULT	QUALIFIER
1,2,4-TRICHLOROBENZENE	UG/KG	BNA	10	U								
1,2-DICHLOROBENZENE	UG/KG	BNA	10	U								
1,3-DICHLOROBENZENE	UG/KG	BNA	10	U								
1,4-DICHLOROBENZENE	UG/KG	BNA	10	U								
2,4,5-TRICHLOROPHENOL	UG/KG	BNA	50	U								
2,4,6-TRICHLOROPHENOL	UG/KG	BNA	10	U								
2,4-DICHLOROPHENOL	UG/KG	BNA	10	U								
2,4-DIMETHYLPHENOL	UG/KG	BNA	10	U								
2,4-DINITROPHENOL	UG/KG	BNA	50	U								
2,4-DINITROTOLUENE	UG/KG	BNA	10	U								
2,6-DINITROTOLUENE	UG/KG	BNA	10	U								
2-CHLORONAPHTHALENE	UG/KG	BNA	10	U								
2-CHLOROPHENOL	UG/KG	BNA	10	U								
2-METHYLNAPHTHALENE	UG/KG	BNA	10	U								
2-METHYLPHENOL	UG/KG	BNA	10	U								
2-NITROANILINE	UG/KG	BNA	50	U								
2-NITROPHENOL	UG/KG	BNA	10	U								
3,3'-DICHLOROBENZIDINE	UG/KG	BNA	20	U								
3-NITROANILINE	UG/KG	BNA	50	U								
4,6-DINITRO-2-METHYLPHENOL	UG/KG	BNA	50	U								
4-BROMOPHENYL-PHENYLETHER	UG/KG	BNA	10	U								
4-CHLORO-3-METHYLPHENOL	UG/KG	BNA	10	U								
4-CHLOROANILINE	UG/KG	BNA	10	U								
4-CHLOROPHENYL-PHENYLETHER	UG/KG	BNA	10	U								
4-METHYLPHENOL	UG/KG	BNA	10	U								
4-NITROANILINE	UG/KG	BNA	50	U								
4-NITROPHENOL	UG/KG	BNA	50	U								
ACENAPHTHENE	UG/KG	BNA	10	U								
ACENAPHTHYLENE	UG/KG	BNA	10	U								
ANTHRACENE	UG/KG	BNA	10	U								
BENZO(A)ANTHRACENE	UG/KG	BNA	10	U								
BENZO(A)PYRENE	UG/KG	BNA	10	U								
BENZO(B)FLUORANTHENE	UG/KG	BNA	10	U								
BENZO(G,H,I)PERYLENE	UG/KG	BNA	10	U								
BENZO(K)FLUORANTHENE	UG/KG	BNA	10	U								
BENZOIC ACID	UG/KG	BNA	50	U								
BENZYL ALCOHOL	UG/KG	BNA	10	U								
BIS(2-CHLOROETHOXY)METHANE	UG/KG	BNA	10	U								
BIS(2-CHLOROETHYL)ETHER	UG/KG	BNA	10	U								
BIS(2-CHLOROISOPROPYL)ETHER	UG/KG	BNA	10	U								
BIS(2-ETHYLHEXYL)PHTHALATE	UG/KG	BNA	10	U								
BUTYLBENZYLPHTHALATE	UG/KG	BNA	10	U								
CHRYSENE	UG/KG	BNA	10	U								
DI-N-BUTYLPHTHALATE	UG/KG	BNA	10	U								
DI-N-OCTYLPHTHALATE	UG/KG	BNA	10	U								
DIBENZ(A,H)ANTHRACENE	UG/KG	BNA	10	U								
DIBENZOFURAN	UG/KG	BNA	10	U								
DIETHYLPHTHALATE	UG/KG	BNA	10	U								
DIMETHYLPHTHALATE	UG/KG	BNA	10	U								
FLUORANTHENE	UG/KG	BNA	10	U								
FLUORENE	UG/KG	BNA	10	U								

NAVSTA-SAN DIEGO
SITE 3 WATER

		SAMPLE NUMBER:	NS3-FB-2-14-91		NS3-MW3-GW1		NS3-MW4-GW1		NS3-MW5-GW1		NS3-TB-2-14-91	
		SAMPLING DATE:	02/14/91		02/14/91		02/14/91		02/13/91		02/14/91	
		BORING:	FB		MW3		MW4		MW5		TB	
		SITE:	NS3		NS3		NS3		NS3		NS3	
		DEPTH:	14-91		NS3-MW3-GW1		NS3-MW4-GW1		NS3-MW5-GW1		14-91	
COMPOUND NAME	UNITS	TEST CODE	RESULT	QUALIFIER	RESULT	QUALIFIER	RESULT	QUALIFIER	RESULT	QUALIFIER	RESULT	QUALIFIER
HEXACHLOROBENZENE	UG/KG	BNA	10	U								
HEXACHLOROBUTADIENE	UG/KG	BNA	10	U								
HEXACHLOROCYCLOPENTADIENE	UG/KG	BNA	10	U								
HEXACHLOROETHANE	UG/KG	BNA	10	U								
INDENO(1,2,3-C,D)PYRENE	UG/KG	BNA	10	U								
ISOPHORONE	UG/KG	BNA	10	U								
N-NITROSO-DI-N-PROPYLAMINE	UG/KG	BNA	10	U								
N-NITROSODIPHENYLAMINE (1)	UG/KG	BNA	10	U								
NAPHTHALENE	UG/KG	BNA	10	U								
NITROBENZENE	UG/KG	BNA	10	U								
PENTACHLOROPHENOL	UG/KG	BNA	50	U								
PHENANTHRENE	UG/KG	BNA	10	U								
PHENOL	UG/KG	BNA	10	U								
PYRENE	UG/KG	BNA	10	U								
1,2,4-TRICHLOROBENZENE	UG/L	BNA			10	U	10	U	10	U		
1,2-DICHLOROBENZENE	UG/L	BNA			10	U	10	U	10	U		
1,3-DICHLOROBENZENE	UG/L	BNA			10	U	10	U	10	U		
1,4-DICHLOROBENZENE	UG/L	BNA			10	U	10	U	10	U		
2,4,5-TRICHLOROPHENOL	UG/L	BNA			50	U	50	U	50	U		
2,4,6-TRIBROMOPHENOL	UG/L	BNA			108		82		90			
2,4,6-TRICHLOROPHENOL	UG/L	BNA			10	U	10	U	10	U		
2,4-DICHLOROPHENOL	UG/L	BNA			10	U	10	U	10	U		
2,4-DIMETHYLPHENOL	UG/L	BNA			10	U	10	U	10	U		
2,4-DINITROPHENOL	UG/L	BNA			50	U	50	U	50	U		
2,4-DINITROTOLUENE	UG/L	BNA			10	U	10	U	10	U		
2,6-DINITROTOLUENE	UG/L	BNA			10	U	10	U	10	U		
2-CHLORONAPHTHALENE	UG/L	BNA			10	U	10	U	10	U		
2-CHLOROPHENOL	UG/L	BNA			10	U	10	U	10	U		
2-FLUOROBIPHENYL	UG/L	BNA			75		73		78			
2-FLUOROPHENOL	UG/L	BNA			84		75		88			
2-METHYLNAPHTHALENE	UG/L	BNA			10	U	10	U	10	U		
2-METHYLPHENOL	UG/L	BNA			10	U	10	U	10	U		
2-NITROANILINE	UG/L	BNA			50	U	50	U	50	U		
2-NITROPHENOL	UG/L	BNA			10	U	10	U	10	U		
3,3'-DICHLOROBENZIDINE	UG/L	BNA			20	U	20	U	20	U		
3-NITROANILINE	UG/L	BNA			50	U	50	U	50	UJ		
4,6-DINITRO-2-METHYLPHENOL	UG/L	BNA			50	U	50	U	50	U		
4-BROMOPHENYL-PHENYLETHER	UG/L	BNA			10	U	10	U	10	U		
4-CHLORO-3-METHYLPHENOL	UG/L	BNA			10	U	10	U	10	U		
4-CHLOROANILINE	UG/L	BNA			10	U	10	U	10	UJ		
4-CHLOROPHENYL-PHENYLETHER	UG/L	BNA			10	U	10	U	10	U		
4-METHYLPHENOL	UG/L	BNA			10	U	10	U	10	U		
4-NITROANILINE	UG/L	BNA			50	U	50	U	50	U		
4-NITROPHENOL	UG/L	BNA			50	U	50	U	50	U		
ACENAPHTHENE	UG/L	BNA			10	U	10	U	10	U		
ACENAPHTHYLENE	UG/L	BNA			10	U	10	U	10	U		
ANTHRACENE	UG/L	BNA			10	U	10	U	10	U		
BENZO(A)ANTHRACENE	UG/L	BNA			10	U	10	U	10	U		
BENZO(A)PYRENE	UG/L	BNA			78		78		84			
BENZO(B)FLUORANTHENE	UG/L	BNA			10	U	10	U	10	U		
BENZO(G,H,I)PERYLENE	*UG/L*	*BNA*			10	U	10	U	10	U		

NAVSTA-SAN DIEGO
SITE 3 WATER

		SAMPLE NUMBER:	NS3-FB-2-14-91		NS3-MW3-GW1		NS3-MW4-GW1		NS3-MW5-GW1		NS3-TB-2-14-91	
		SAMPLING DATE:	02/14/91		02/14/91		02/14/91		02/13/91		02/14/91	
		BORING:	FB		MW3		MW4		MW5		TB	
		SITE:	NS3		NS3		NS3		NS3		NS3	
		DEPTH:	14-91		NS3-MW3-GW1		NS3-MW4-GW1		NS3-MW5-GW1		14-91	
COMPOUND NAME	UNITS	TEST CODE	RESULT	QUALIFIER	RESULT	QUALIFIER	RESULT	QUALIFIER	RESULT	QUALIFIER	RESULT	QUALIFIER
BENZO(K)FLUORANTHENE	UG/L	BNA			10	U	10	U	10	U		
BENZOIC ACID	UG/L	BNA			50	U	50	U	50	U		
BENZYL ALCOHOL	UG/L	BNA			10	U	10	U	10	U		
BIS(2-CHLOROETHOXY)METHANE	UG/L	BNA			10	U	10	U	10	U		
BIS(2-CHLOROETHYL)ETHER	UG/L	BNA			10	U	10	U	10	U		
BIS(2-CHLOROISOPROPYL)ETHER	UG/L	BNA			10	U	10	U	10	U		
BIS(2-ETHYLHEXYL)PHTHALATE	UG/L	BNA			10	U	10	U	10	U		
BUTYLBENZYLPHTHALATE	UG/L	BNA			10	U	10	U	10	U		
CHRYSENE	UG/L	BNA			10	U	10	U	10	U		
DI-N-BUTYLPHTHALATE	UG/L	BNA			10	U	10	U	10	U		
DI-N-OCTYLPHTHALATE	UG/L	BNA			10	U	10	U	10	U		
DIBENZ(A,H)ANTHRACENE	UG/L	BNA			10	U	10	U	10	U		
DIBENZOFURAN	UG/L	BNA			10	U	10	U	10	U		
DIETHYLPHTHALATE	UG/L	BNA			10	U	10	U	10	U		
DIMETHYLPHTHALATE	UG/L	BNA			10	U	10	U	10	U		
FLUORANTHENE	UG/L	BNA			10	U	10	U	10	U		
FLUORENE	UG/L	BNA			10	U	10	U	10	U		
HEXACHLOROBENZENE	UG/L	BNA			10	U	10	U	10	U		
HEXACHLOROBUTADIENE	UG/L	BNA			10	U	10	U	10	U		
HEXACHLOROCYCLOPENTADIENE	UG/L	BNA			10	U	10	U	10	U		
HEXACHLOROETHANE	UG/L	BNA			10	U	10	U	10	U		
INDENO(1,2,3-C,D)PYRENE	UG/L	BNA			10	U	10	U	10	U		
ISOPHORONE	UG/L	BNA			10	U	10	U	10	U		
N-NITROSO-DI-N-PROPYLAMINE	UG/L	BNA			10	U	10	U	10	U		
N-NITROSODIPHENYLAMINE (1)	UG/L	BNA			10	U	10	U	10	U		
NAPHTHALENE	UG/L	BNA			10	U	10	U	10	U		
NITROBENZENE	UG/L	BNA			10	U	10	U	10	U		
NITROBENZENE-D5	UG/L	BNA			85		80		86			
PENTACHLOROPHENOL	UG/L	BNA			50	U	50	U	50	U		
PHENANTHRENE	UG/L	BNA			10	U	10	U	10	U		
PHENOL	UG/L	BNA			10	U	10	U	10	U		
PHENOL-D5	UG/L	BNA			79		74		88			
PYRENE	UG/L	BNA			10	U	10	U	10	U		
TERPHENYL-D14	UG/L	BNA			57		29		33			
ANTIMONY	UG/KG	CAC METALS	19.0	U								
ARSENIC	UG/KG	CAC METALS	1.0	U								
BARIUM	UG/KG	CAC METALS	8.8	B								
BERYLLIUM	UG/KG	CAC METALS	1.0	U								
CADMIUM	UG/KG	CAC METALS	4.0	U								
CHROMIUM	UG/KG	CAC METALS	4.0	U								
COBALT	UG/KG	CAC METALS	5.0	U								
COPPER	UG/KG	CAC METALS	14.8	B								
LEAD	UG/KG	CAC METALS	1.0	U								
MERCURY	UG/KG	CAC METALS	0.20	U								
MOLYBDENUM	UG/KG	CAC METALS	7.0	U								
NICKEL	UG/KG	CAC METALS	9.0	U								
SELENIUM	UG/KG	CAC METALS	1.0	U								
SILVER	UG/KG	CAC METALS	4.0	B								
THALLIUM	UG/KG	CAC METALS	1.0	U								
VANADIUM	UG/KG	CAC METALS	34.0	B								
ZINC	*UG/KG*	*CAC METALS*	*17.4*	*B*								

NAVSTA-SAN DIEGO
SITE 3 WATER

		SAMPLE NUMBER:	NS3-FB-2-14-91		NS3-MW3-GW1		NS3-MW4-GW1		NS3-MW5-GW1		NS3-TB-2-14-91	
		SAMPLING DATE:	02/14/91		02/14/91		02/14/91		02/13/91		02/14/91	
		BORING:	FB		MW3		MW4		MW5		TB	
		SITE:	NS3		NS3		NS3		NS3		NS3	
		DEPTH:	14-91		NS3-MW3-GW1		NS3-MW4-GW1		NS3-MW5-GW1		14-91	
COMPOUND NAME	UNITS	TEST CODE	RESULT	QUALIFIER	RESULT	QUALIFIER	RESULT	QUALIFIER	RESULT	QUALIFIER	RESULT	QUALIFIER
ANTIMONY	UG/L	CAC METALS			66.3		68.1		69.5			
ARSENIC	UG/L	CAC METALS			13.0	B	1.0	UJ	5.1	BJ		
BARIUM	UG/L	CAC METALS			69.3	B	95.6	B	72.7	B		
BERYLLIUM	UG/L	CAC METALS			1.0	U	1.0	U	1.0	U		
CADMIUM	UG/L	CAC METALS			4.0	U	13.4		4.0	U		
CHROMIUM	UG/L	CAC METALS			4.0	U	5.1	B	4.0	U		
COBALT	UG/L	CAC METALS			5.0	U	5.2	B	5.0	U		
COPPER	UG/L	CAC METALS			6.0	UJ	44.9	UJ	6.0	UJ		
LEAD	UG/L	CAC METALS			10.0	U	1.0	UJ	1.0	UJ		
MERCURY	UG/L	CAC METALS			0.20	U	0.20	U	0.20	U		
MOLYBDENUM	UG/L	CAC METALS			10.4	B	7.7	B	22.8	B		
NICKEL	UG/L	CAC METALS			13.7	B	9.0	U	9.0	U		
SELENIUM	UG/L	CAC METALS			10.0	UJ	1.0	UJ	1.0	UJ		
SILVER	UG/L	CAC METALS			3.0	U	3.0	U	8.6	UR		
THALLIUM	UG/L	CAC METALS			10.0	UJ	1.0	UJ	1.0	UJ		
VANADIUM	UG/L	CAC METALS			56.4	U	60.8		31.3	U		
ZINC	UG/L	CAC METALS			2.0	U	11.9	U	31.8	U		
4,4'-DDD	UG/KG	PEST / PCB	0.10	U								
4,4'-DDE	UG/KG	PEST / PCB	0.10	U								
4,4'-DDT	UG/KG	PEST / PCB	0.10	U								
ALDRIN	UG/KG	PEST / PCB	0.05	U								
ALPHA-BHC	UG/KG	PEST / PCB	0.05	U								
ALPHA-CHLORDANE	UG/KG	PEST / PCB	0.50	U								
BETA-BHC	UG/KG	PEST / PCB	0.05	U								
DELTA-BHC	UG/KG	PEST / PCB	0.05	U								
DIELDRIN	UG/KG	PEST / PCB	0.10	U								
ENDOSULFAN I	UG/KG	PEST / PCB	0.05	U								
ENDOSULFAN II	UG/KG	PEST / PCB	0.10	U								
ENDOSULFAN SULFATE	UG/KG	PEST / PCB	0.10	U								
ENDRIN	UG/KG	PEST / PCB	0.10	U								
ENDRIN KETONE	UG/KG	PEST / PCB	0.10	U								
GAMMA-BHC (LINDANE)	UG/KG	PEST / PCB	0.05	U								
GAMMA-CHLORDANE	UG/KG	PEST / PCB	0.50	U								
HEPTACHLOR	UG/KG	PEST / PCB	0.05	U								
HEPTACHLOR EPOXIDE	UG/KG	PEST / PCB	0.05	U								
METHOXYCHLOR	UG/KG	PEST / PCB	0.50	U								
PCB-1016	UG/KG	PEST / PCB	0.50	U								
PCB-1221	UG/KG	PEST / PCB	0.50	U								
PCB-1232	UG/KG	PEST / PCB	0.50	U								
PCB-1242	UG/KG	PEST / PCB	0.50	U								
PCB-1248	UG/KG	PEST / PCB	0.50	U								
PCB-1254	UG/KG	PEST / PCB	1.00	U								
PCB-1260	UG/KG	PEST / PCB	1.00	U								
TOXAPHENE	UG/KG	PEST / PCB	1.00	U								
4,4'-DDD	UG/L	PEST / PCB			0.10	U	0.10	U	0.1	U		
4,4'-DDE	UG/L	PEST / PCB			0.10	U	0.10	U	0.1	U		
4,4'-DDT	UG/L	PEST / PCB			0.10	U	0.10	U	0.1	U		
ALDRIN	UG/L	PEST / PCB			0.05	U	0.05	U	0.05	U		
ALPHA-BHC	UG/L	PEST / PCB			0.05	U	0.05	U	0.05	U		
ALPHA-CHLORDANE	UG/L	PEST / PCB			0.50	U	0.50	U	0.5	U		
BETA-BHC	UG/L	PEST / PCB			0.05	U	0.05	U	0.05	U		

NAVSTA-SAN DIEGO
SITE 3 WATER

		SAMPLE NUMBER:	NS3-FB-2-14-91		NS3-MW3-GW1		NS3-MW4-GW1		NS3-MW5-GW1		NS3-TB-2-14-91	
		SAMPLING DATE:	02/14/91		02/14/91		02/14/91		02/13/91		02/14/91	
		BORING:	FB		MW3		MW4		MW5		TB	
		SITE:	NS3		NS3		NS3		NS3		NS3	
		DEPTH:	14-91		NS3-MW3-GW1		NS3-MW4-GW1		NS3-MW5-GW1		14-91	
COMPOUND NAME	UNITS	TEST CODE	RESULT	QUALIFIER	RESULT	QUALIFIER	RESULT	QUALIFIER	RESULT	QUALIFIER	RESULT	QUALIFIER
DELTA-BHC	UG/L	PEST / PCB			0.05	U	0.05	U	0.05	U		
DIBUTYL CHLORENDATE	UG/L	PEST / PCB			75		76		75			
DIELDRIN	UG/L	PEST / PCB			0.10	U	0.10	U	0.1	U		
ENDOSULFAN I	UG/L	PEST / PCB			0.05	U	0.05	U	0.05	U		
ENDOSULFAN II	UG/L	PEST / PCB			0.10	U	0.10	U	0.1	U		
ENDOSULFAN SULFATE	UG/L	PEST / PCB			0.10	U	0.10	U	0.1	U		
ENDRIN	UG/L	PEST / PCB			0.10	U	0.10	U	0.1	U		
ENDRIN KETONE	UG/L	PEST / PCB			0.10	U	0.10	U	0.1	U		
GAMMA-BHC (LINDANE)	UG/L	PEST / PCB			0.05	U	0.05	U	0.05	U		
GAMMA-CHLORDANE	UG/L	PEST / PCB			0.50	U	0.50	U	0.5	U		
HEPTACHLOR	UG/L	PEST / PCB			0.05	U	0.05	U	0.05	U		
HEPTACHLOR EPOXIDE	UG/L	PEST / PCB			0.05	U	0.05	U	0.05	U		
METHOXYCHLOR	UG/L	PEST / PCB			0.50	U	0.50	U	0.5	U		
PCB-1016	UG/L	PEST / PCB			0.50	U	0.50	U	0.5	U		
PCB-1221	UG/L	PEST / PCB			0.50	U	0.50	U	0.5	U		
PCB-1232	UG/L	PEST / PCB			0.50	U	0.50	U	0.5	U		
PCB-1242	UG/L	PEST / PCB			0.50	U	0.50	U	0.5	U		
PCB-1248	UG/L	PEST / PCB			0.50	U	0.50	U	0.5	U		
PCB-1254	UG/L	PEST / PCB			1.00	U	1.00	U	1	U		
PCB-1260	UG/L	PEST / PCB			1.00	U	1.00	U	1	U		
TOXAPHENE	UG/L	PEST / PCB			1.00	U	1.00	U	1	U		
DIESEL	UG/KG	TPHC	250	U								
BENZO(A)PYRENE	UG/L	TPHC			78		78		84			
DIESEL	UG/L	TPHC			250	U	260		250	U		
1,1,1-TRICHLOROETHANE	UG/KG	VOA	5	U							5	U
1,1,2,2-TETRACHLOROETHANE	UG/KG	VOA	5	U							5	U
1,1,2-TRICHLOROETHANE	UG/KG	VOA	5	U							5	U
1,1-DICHLOROETHANE	UG/KG	VOA	5	U							5	U
1,1-DICHLOROETHENE	UG/KG	VOA	5	U							5	U
1,2-DICHLOROETHANE	UG/KG	VOA	5	U							5	U
1,2-DICHLOROETHENE (TOTAL)	UG/KG	VOA	5	U							5	U
1,2-DICHLOROPROPANE	UG/KG	VOA	5	U							5	U
2-BUTANONE	UG/KG	VOA	10	U							10	U
2-HEXANONE	UG/KG	VOA	10	U							10	U
4-METHYL-2-PENTANONE	UG/KG	VOA	10	U							10	U
ACETONE	UG/KG	VOA	10	U							10	U
BENZENE	UG/KG	VOA	5	U							5	U
BROMODICHLOROMETHANE	UG/KG	VOA	3	J							5	U
BROMOFORM	UG/KG	VOA	1	J							5	U
BROMOMETHANE	UG/KG	VOA	10	U							10	U
CARBON DISULFIDE	UG/KG	VOA	5	U							5	U
CARBON TETRACHLORIDE	UG/KG	VOA	5	U							5	U
CHLOROBENZENE	UG/KG	VOA	5	U							5	U
CHLOROETHANE	UG/KG	VOA	10	U							10	U
CHLOROFORM	UG/KG	VOA	8	B							5	U
CHLOROMETHANE	UG/KG	VOA	10	U							10	U
CIS-1,3-DICHLOROPROPENE	UG/KG	VOA	5	U							5	U
DIBROMOCHLOROMETHANE	UG/KG	VOA	3	J							5	U
ETHYLBENZENE	UG/KG	VOA	5	U							5	U
METHYLENE CHLORIDE	UG/KG	VOA	4	BJ							5	B
STYRENE	*UG/KG*	*VOA*	5	U							5	U

NAVSTA-SAN DIEGO
SITE 3 WATER

		SAMPLE NUMBER:	NS3-FB-2-14-91		NS3-MW3-GW1		NS3-MW4-GW1		NS3-MW5-GW1		NS3-TB-2-14-91	
		SAMPLING DATE:	02/14/91		02/14/91		02/14/91		02/13/91		02/14/91	
		BORING:	FB		MW3		MW4		MW5		TB	
		SITE:	NS3		NS3		NS3		NS3		NS3	
		DEPTH:	14-91		NS3-MW3-GW1		NS3-MW4-GW1		NS3-MW5-GW1		14-91	
COMPOUND NAME	UNITS	TEST CODE	RESULT	QUALIFIER	RESULT	QUALIFIER	RESULT	QUALIFIER	RESULT	QUALIFIER	RESULT	QUALIFIER
TETRACHLOROETHENE	UG/KG	VOA	5	U							5	U
TOLUENE	UG/KG	VOA	5	U							5	U
TRANS-1,3-DICHLOROPROPENE	UG/KG	VOA	5	U							5	U
TRICHLOROETHENE	UG/KG	VOA	5	U							5	U
VINYL ACETATE	UG/KG	VOA	10	U							10	U
VINYL CHLORIDE	UG/KG	VOA	10	U							10	U
XYLENES (TOTAL)	UG/KG	VOA	5	U							5	U
1,1,1-TRICHLOROETHANE	UG/L	VOA			5	U	5	U	5	U		
1,1,2,2-TETRACHLOROETHANE	UG/L	VOA			5	U	5	U	5	U		
1,1,2-TRICHLOROETHANE	UG/L	VOA			5	U	5	U	5	U		
1,1-DICHLOROETHANE	UG/L	VOA			5	U	6		5	U		
1,1-DICHLOROETHENE	UG/L	VOA			5	U	5	U	5	U		
1,2-DICHLOROETHANE	UG/L	VOA			5	U	5	U	5	U		
1,2-DICHLOROETHANE-D4	UG/L	VOA			92		89		95			
1,2-DICHLOROETHENE (TOTAL)	UG/L	VOA			5	U	2	J	5	UJ		
1,2-DICHLOROPROPANE	UG/L	VOA			5	U	5	U	5	U		
2-BUTANONE	UG/L	VOA			10	U	10	U	10	U		
2-HEXANONE	UG/L	VOA			10	UJ	10	UJ	10	UJ		
4-METHYL-2-PENTANONE	UG/L	VOA			10	UJ	10	UJ	10	UJ		
ACETONE	UG/L	VOA			10	UJ	10	UJ	10	UJ		
BENZENE	UG/L	VOA			5	UJ	5	UJ	5	UJ		
BROMODICHLOROMETHANE	UG/L	VOA			5	U	5	U	5	U		
BROMOFLUOROBENZENE	UG/L	VOA			96		98		90			
BROMOFORM	UG/L	VOA			5	UJ	5	UJ	5	UJ		
BROMOMETHANE	UG/L	VOA			10	U	10	U	10	U		
CARBON DISULFIDE	UG/L	VOA			6	J	8	J	5	UJ		
CARBON TETRACHLORIDE	UG/L	VOA			5	U	5	U	5	U		
CHLOROBENZENE	UG/L	VOA			5	U	5	U	5	UJ		
CHLOROETHANE	UG/L	VOA			10	U	10	U	10	U		
CHLOROFORM	UG/L	VOA			5	U	5	U	5	U		
CHLOROMETHANE	UG/L	VOA			10	UJ	10	UJ	10	UJ		
CIS-1,3-DICHLOROPROPENE	UG/L	VOA			5	UJ	5	UJ	5	UJ		
DIBROMOCHLOROMETHANE	UG/L	VOA			5	U	5	U	5	U		
ETHYLBENZENE	UG/L	VOA			5	U	5	U	5	UJ		
METHYLENE CHLORIDE	UG/L	VOA			5	U	5	U	5	U		
STYRENE	UG/L	VOA			5	U	5	U	5	UJ		
TETRACHLOROETHENE	UG/L	VOA			5	U	5	U	5	U		
TOLUENE	UG/L	VOA			5	U	5	U	5	UJ		
TOLUENE-D8	UG/L	VOA			103		105		94			
TRANS-1,3-DICHLOROPROPENE	UG/L	VOA			5	U	5	U	5	U		
TRICHLOROETHENE	UG/L	VOA			5	U	5	U	5	U		
VINYL ACETATE	UG/L	VOA			10	U	10	U	10	U		
VINYL CHLORIDE	UG/L	VOA			10	U	10	U	10	U		
XYLENES (TOTAL)	UG/L	VOA			5	U	5	U	5	UJ		

NAVSTA-SAN DIEGO
SITE 4 WATER

		SAMPLE NUMBER:	NS4-BH1-S01-5		NS4-BH1-S02-10		NS4-BH2-S01-5		NS4-BH2-S02-15		NS4-BH2-S03-5 FD	
		SAMPLING DATE:	01/24/91		01/24/91		01/24/91		01/24/91		01/24/91	
		BORING:	BH1		BH1		BH2		BH2		BH2	
		SITE:	NS4		NS4		NS4		NS4		NS4	
		DEPTH:	5		10		5		15		5 FD	
COMPOUND NAME	UNITS	TEST CODE	RESULT	QUALIFIER	RESULT	QUALIFIER	RESULT	QUALIFIER	RESULT	QUALIFIER	RESULT	QUALIFIER
1,2,4-TRICHLOROBENZENE	UG/KG	BNA	380	U	390	U	370	U	400	U	370	U
1,2-DICHLOROBENZENE	UG/KG	BNA	380	U	390	U	370	U	400	U	370	U
1,3-DICHLOROBENZENE	UG/KG	BNA	380	U	390	U	370	U	400	U	370	U
1,4-DICHLOROBENZENE	UG/KG	BNA	380	U	390	U	370	U	400	U	370	U
2,4,5-TRICHLOROPHENOL	UG/KG	BNA	1800	U	1900	U	1800	U	1900	U	1800	U
2,4,6-TRICHLOROPHENOL	UG/KG	BNA	380	U	390	U	370	U	400	U	370	U
2,4-DICHLOROPHENOL	UG/KG	BNA	380	U	390	U	370	U	400	U	370	U
2,4-DIMETHYLPHENOL	UG/KG	BNA	380	U	390	U	370	U	400	U	370	U
2,4-DINITROPHENOL	UG/KG	BNA	1800	U	1900	U	1800	U	1900	U	1800	U
2,4-DINITROTOLUENE	UG/KG	BNA	380	U	390	U	370	U	400	U	370	U
2,6-DINITROTOLUENE	UG/KG	BNA	380	U	390	U	370	U	400	U	370	U
2-CHLORONAPHTHALENE	UG/KG	BNA	380	U	390	U	370	U	400	U	370	U
2-CHLOROPHENOL	UG/KG	BNA	380	U	390	U	370	U	400	U	370	U
2-METHYLNAPHTHALENE	UG/KG	BNA	380	U	390	U	370	U	400	U	370	U
2-METHYLPHENOL	UG/KG	BNA	380	U	390	U	370	U	400	U	370	U
2-NITROANILINE	UG/KG	BNA	1800	U	1900	U	1800	U	1900	U	1800	U
2-NITROPHENOL	UG/KG	BNA	380	U	390	U	370	U	400	U	370	U
3,3'-DICHLOROBENZIDINE	UG/KG	BNA	760	U	790	U	740	U	800	U	740	U
3-NITROANILINE	UG/KG	BNA	1800	U	1900	U	1800	U	1900	U	1800	U
4,6-DINITRO-2-METHYLPHENOL	UG/KG	BNA	1800	U	1900	U	1800	U	1900	U	1800	U
4-BROMOPHENYL-PHENYLETHER	UG/KG	BNA	380	U	390	U	370	U	400	U	370	U
4-CHLORO-3-METHYLPHENOL	UG/KG	BNA	380	U	390	U	370	U	400	U	370	U
4-CHLOROANILINE	UG/KG	BNA	380	U	390	U	370	U	400	U	370	U
4-CHLOROPHENYL-PHENYLETHER	UG/KG	BNA	380	U	390	U	370	U	400	U	370	U
4-METHYLPHENOL	UG/KG	BNA	380	U	390	U	370	U	400	U	370	U
4-NITROANILINE	UG/KG	BNA	1800	U	1900	U	1800	U	1900	U	1800	U
4-NITROPHENOL	UG/KG	BNA	1800	U	1900	U	1800	U	1900	U	1800	U
ACENAPHTHENE	UG/KG	BNA	380	U	390	U	370	U	400	U	370	U
ACENAPHTHYLENE	UG/KG	BNA	380	U	390	U	370	U	400	U	370	U
ANTHRACENE	UG/KG	BNA	380	U	390	U	370	U	400	U	370	U
BENZO(A)ANTHRACENE	UG/KG	BNA	110	J	390	U	370	U	400	U	370	U
BENZO(A)PYRENE	UG/KG	BNA	740		390	U	370	U	400	U	370	U
BENZO(B)FLUORANTHENE	UG/KG	BNA	680		390	U	370	U	400	U	370	U
BENZO(G,H,I)PERYLENE	UG/KG	BNA	320	J	390	U	370	U	400	U	370	U
BENZO(K)FLUORANTHENE	UG/KG	BNA	490		390	U	370	U	400	U	370	U
BENZOIC ACID	UG/KG	BNA	1800	U	1900	U	43	J	1900	U	1800	U
BENZYL ALCOHOL	UG/KG	BNA	380	U	390	U	370	U	400	U	370	U
BIS(2-CHLOROETHOXY)METHANE	UG/KG	BNA	380	U	390	U	370	U	400	U	370	U
BIS(2-CHLOROETHYL)ETHER	UG/KG	BNA	380	U	390	U	370	U	400	U	370	U
BIS(2-CHLOROISOPROPYL)ETHER	UG/KG	BNA	380	U	390	U	370	U	400	U	370	U
BIS(2-ETHYLHEXYL)PHTHALATE	UG/KG	BNA	1200		390	U	65	J	400	U	370	U
BUTYLBENZYLPHTHALATE	UG/KG	BNA	380	U	390	U	370	U	400	U	370	U
CHRYSENE	UG/KG	BNA	320	J	390	U	370	U	400	U	370	U
DI-N-BUTYLPHTHALATE	UG/KG	BNA	380	U	390	U	370	U	400	U	370	U
DI-N-OCTYLPHTHALATE	UG/KG	BNA	380	U	390	U	370	U	400	U	370	U
DIBENZ(A,H)ANTHRACENE	UG/KG	BNA	88	J	390	U	370	U	400	U	370	U
DIBENZOFURAN	UG/KG	BNA	380	U	390	U	370	U	400	U	370	U
DIETHYLPHTHALATE	UG/KG	BNA	380	U	390	U	370	U	78	J	370	U
DIMETHYLPHTHALATE	UG/KG	BNA	380	U	390	U	370	U	400	U	370	U
FLUORANTHENE	UG/KG	BNA	140	J	390	U	370	U	400	U	370	U
FLUORENE	UG/KG	BNA	380	U	390	U	370	U	400	U	370	U

NAVSTA-SAN DIEGO
SITE 4 WATER

		SAMPLE NUMBER:	NS4-BH1-S01-5		NS4-BH1-S02-10		NS4-BH2-S01-5		NS4-BH2-S02-15		NS4-BH2-S03-5 FD	
		SAMPLING DATE:	01/24/91		01/24/91		01/24/91		01/24/91		01/24/91	
		BORING:	BH1		BH1		BH2		BH2		BH2	
		SITE:	NS4		NS4		NS4		NS4		NS4	
		DEPTH:	5		10		5		15		5 FD	
COMPOUND NAME	UNITS	TEST CODE	RESULT	QUALIFIER	RESULT	QUALIFIER	RESULT	QUALIFIER	RESULT	QUALIFIER	RESULT	QUALIFIER
HEXACHLOROBENZENE	UG/KG	BNA	380	U	390	U	370	U	400	U	370	U
HEXACHLOROBUTADIENE	UG/KG	BNA	380	U	390	U	370	U	400	U	370	U
HEXACHLOROCYCLOPENTADIENE	UG/KG	BNA	380	U	390	U	370	U	400	U	370	U
HEXACHLOROETHANE	UG/KG	BNA	380	U	390	U	370	U	400	U	370	U
INDENO(1,2,3-C,D)PYRENE	UG/KG	BNA	280	J	390	U	370	U	400	U	370	U
ISOPHORONE	UG/KG	BNA	380	U	390	U	370	U	400	U	370	U
N-NITROSO-DI-N-PROPYLAMINE	UG/KG	BNA	380	U	390	U	370	U	400	U	370	U
N-NITROSODIPHENYLAMINE (1)	UG/KG	BNA	380	U	390	U	370	U	400	U	370	U
NAPHTHALENE	UG/KG	BNA	380	U	390	U	370	U	400	U	370	U
NITROBENZENE	UG/KG	BNA	380	U	390	U	370	U	400	U	370	U
PENTACHLOROPHENOL	UG/KG	BNA	1800	U	1900	U	1800	U	1900	U	1800	U
PHENANTHRENE	UG/KG	BNA	380	U	390	U	370	U	400	U	370	U
PHENOL	UG/KG	BNA	380	U	390	U	370	U	400	U	370	U
PYRENE	UG/KG	BNA	220	J	390	U	370	U	400	U	370	U
1,2,4-TRICHLOROBENZENE	UG/L	BNA										
1,2-DICHLOROBENZENE	UG/L	BNA										
1,3-DICHLOROBENZENE	UG/L	BNA										
1,4-DICHLOROBENZENE	UG/L	BNA										
2,4,5-TRICHLOROPHENOL	UG/L	BNA										
2,4,6-TRIBROMOPHENOL	UG/L	BNA										
2,4,6-TRICHLOROPHENOL	UG/L	BNA										
2,4-DICHLOROPHENOL	UG/L	BNA										
2,4-DIMETHYLPHENOL	UG/L	BNA										
2,4-DINITROPHENOL	UG/L	BNA										
2,4-DINITROTOLUENE	UG/L	BNA										
2,6-DINITROTOLUENE	UG/L	BNA										
2-CHLORONAPHTHALENE	UG/L	BNA										
2-CHLOROPHENOL	UG/L	BNA										
2-FLUOROBIPHENYL	UG/L	BNA										
2-FLUOROPHENOL	UG/L	BNA										
2-METHYLNAPHTHALENE	UG/L	BNA										
2-METHYLPHENOL	UG/L	BNA										
2-NITROANILINE	UG/L	BNA										
2-NITROPHENOL	UG/L	BNA										
3,3'-DICHLOROBENZIDINE	UG/L	BNA										
3-NITROANILINE	UG/L	BNA										
4,6-DINITRO-2-METHYLPHENOL	UG/L	BNA										
4-BROMOPHENYL-PHENYLETHER	UG/L	BNA										
4-CHLORO-3-METHYLPHENOL	UG/L	BNA										
4-CHLOROANILINE	UG/L	BNA										
4-CHLOROPHENYL-PHENYLETHER	UG/L	BNA										
4-METHYLPHENOL	UG/L	BNA										
4-NITROANILINE	UG/L	BNA										
4-NITROPHENOL	UG/L	BNA										
ACENAPHTHENE	UG/L	BNA										
ACENAPHTHYLENE	UG/L	BNA										
ANTHRACENE	UG/L	BNA										
BENZO(A)ANTHRACENE	UG/L	BNA										
BENZO(A)PYRENE	UG/L	BNA										
BENZO(B)FLUORANTHENE	UG/L	BNA										
BENZO(G,H,I)PERYLENE	UG/L	BNA										

NAVSTA-SAN DIEGO
SITE 4 WATER

		SAMPLE NUMBER:	NS4-BH1-S01-5		NS4-BH1-S02-10		NS4-BH2-S01-5		NS4-BH2-S02-15		NS4-BH2-S03-5 FD	
		SAMPLING DATE:	01/24/91		01/24/91		01/24/91		01/24/91		01/24/91	
		BORING:	BH1		BH1		BH2		BH2		BH2	
		SITE:	NS4		NS4		NS4		NS4		NS4	
		DEPTH:	5		10		5		15		5 FD	
COMPOUND NAME	UNITS	TEST CODE	RESULT	QUALIFIER	RESULT	QUALIFIER	RESULT	QUALIFIER	RESULT	QUALIFIER	RESULT	QUALIFIER
BENZO(K)FLUORANTHENE	UG/L	BNA										
BENZOIC ACID	UG/L	BNA										
BENZYL ALCOHOL	UG/L	BNA										
BIS(2-CHLOROETHOXY)METHANE	UG/L	BNA										
BIS(2-CHLOROETHYL)ETHER	UG/L	BNA										
BIS(2-CHLOROISOPROPYL)ETHER	UG/L	BNA										
BIS(2-ETHYLHEXYL)PHTHALATE	UG/L	BNA										
BUTYLBENZYLPHTHALATE	UG/L	BNA										
CHRYSENE	UG/L	BNA										
DI-N-BUTYLPHTHALATE	UG/L	BNA										
DI-N-OCTYLPHTHALATE	UG/L	BNA										
DIBENZ(A,H)ANTHRACENE	UG/L	BNA										
DIBENZO(A,H)ANTHRACENE	UG/L	BNA										
DIBENZOFURAN	UG/L	BNA										
DIETHYLPHTHALATE	UG/L	BNA										
DIMETHYLPHTHALATE	UG/L	BNA										
FLUORANTHENE	UG/L	BNA										
FLUORENE	UG/L	BNA										
HEXACHLOROBENZENE	UG/L	BNA										
HEXACHLOROBUTADIENE	UG/L	BNA										
HEXACHLOROCYCLOPENTADIENE	UG/L	BNA										
HEXACHLOROETHANE	UG/L	BNA										
INDENO(1,2,3-C,D)PYRENE	UG/L	BNA										
ISOPHORONE	UG/L	BNA										
N-NITROSO-DI-N-PROPYLAMINE	UG/L	BNA										
N-NITROSODIPHENYLAMINE (1)	UG/L	BNA										
NAPHTHALENE	UG/L	BNA										
NITROBENZENE	UG/L	BNA										
NITROBENZENE-D5	UG/L	BNA										
PENTACHLOROPHENOL	UG/L	BNA										
PHENANTHRENE	UG/L	BNA										
PHENOL	UG/L	BNA										
PHENOL-D5	UG/L	BNA										
PYRENE	UG/L	BNA										
TERPHENYL-D14	UG/L	BNA										
ANTIMONY	MG/KG	CAC METALS	33.7	J	4.0	UJ	4.2	U	4.5	U	4.8	B
ARSENIC	MG/KG	CAC METALS	3.4		1.3	B	2.1	B	2.4		1.7	B
BARIUM	MG/KG	CAC METALS	82.0		38.0	B	75.7		135		85.2	
BERYLLIUM	MG/KG	CAC METALS	1.3		1.0	B	2.0		2.2		1.7	
CADMIUM	MG/KG	CAC METALS	2.7		0.87	U	0.89	U	0.96	U	0.82	U
CHROMIUM	MG/KG	CAC METALS	51.7		6.0		13.6		14.6		10	
COBALT	MG/KG	CAC METALS	4.4	B	3.2	B	7.7	B	9.6	B	8.8	B
COPPER	MG/KG	CAC METALS	450		58.7	U	48.8	U	13.1	U	64.0	
LEAD	MG/KG	CAC METALS	3280		11.3		26.6		5.2	U	80.4	
MERCURY	MG/KG	CAC METALS	0.69		0.18	U	0.21		0.18	U	0.17	U
MOLYBDENUM	MG/KG	CAC METALS	1.6	U	1.5	U	1.9	U	1.7	U	1.4	U
NICKEL	MG/KG	CAC METALS	4.8	B	4.4	B	5.5	B	4.3	B	3.4	B
SELENIUM	MG/KG	CAC METALS	0.44	U	0.45	U	0.44	U	0.47	U	0.44	U
SILVER	MG/KG	CAC METALS	1.6	U	1.3	U	1.8	U	1.3	U	2.1	U
THALLIUM	MG/KG	CAC METALS	0.22	B	0.22	U	0.22	U	0.26	B	0.29	B
VANADIUM	MG/KG	CAC METALS	23.6		21.3		51.4		53.4		53.7	

NAVSTA-SAN DIEGO
SITE 4 WATER

		SAMPLE NUMBER:	NS4-BH1-S01-5		NS4-BH1-S02-10		NS4-BH2-S01-5		NS4-BH2-S02-15		NS4-BH2-S03-5 FD	
		SAMPLING DATE:	01/24/91		01/24/91		01/24/91		01/24/91		01/24/91	
		BORING:	BH1		BH1		BH2		BH2		BH2	
		SITE:	NS4		NS4		NS4		NS4		NS4	
		DEPTH:	5		10		5		15		5 FD	
COMPOUND NAME	UNITS	TEST CODE	RESULT	QUALIFIER	RESULT	QUALIFIER	RESULT	QUALIFIER	RESULT	QUALIFIER	RESULT	QUALIFIER
ZINC	MG/KG	CAC METALS	496	U	26.0	U	81.1		33.5		84.0	
ANTIMONY	UG/KG	CAC METALS										
ARSENIC	UG/KG	CAC METALS										
BARIUM	UG/KG	CAC METALS										
BERYLLIUM	UG/KG	CAC METALS										
CADMIUM	UG/KG	CAC METALS										
CHROMIUM	UG/KG	CAC METALS										
COBALT	UG/KG	CAC METALS										
COPPER	UG/KG	CAC METALS										
LEAD	UG/KG	CAC METALS										
MERCURY	UG/KG	CAC METALS										
MOLYBDENUM	UG/KG	CAC METALS										
NICKEL	UG/KG	CAC METALS										
SELENIUM	UG/KG	CAC METALS										
SILVER	UG/KG	CAC METALS										
THALLIUM	UG/KG	CAC METALS										
VANADIUM	UG/KG	CAC METALS										
ZINC	UG/KG	CAC METALS										
ANTIMONY	UG/L	CAC METALS										
ARSENIC	UG/L	CAC METALS										
BARIUM	UG/L	CAC METALS										
BERYLLIUM	UG/L	CAC METALS										
CADMIUM	UG/L	CAC METALS										
CHROMIUM	UG/L	CAC METALS										
COBALT	UG/L	CAC METALS										
COPPER	UG/L	CAC METALS										
LEAD	UG/L	CAC METALS										
MERCURY	UG/L	CAC METALS										
MOLYBDENUM	UG/L	CAC METALS										
NICKEL	UG/L	CAC METALS										
SELENIUM	UG/L	CAC METALS										
SILVER	UG/L	CAC METALS										
THALLIUM	UG/L	CAC METALS										
VANADIUM	UG/L	CAC METALS										
ZINC	UG/L	CAC METALS										
CAC WET EXTRACTION	DATE	CAC WET EX										
COPPER	MG/L	CAC WET EX										
LEAD	MG/L	CAC WET EX	250								5.8	
TOTAL CYANIDE	MG/KG	CN	1	UJ	1	UJ	1	UJ	1	UJ	1	UJ
TOTAL CYANIDE	MG/L	CN										
4,4'-DDD	UG/KG	PEST / PCB	74	UJ	76	UJ	18	U	19	U	18	U
4,4'-DDE	UG/KG	PEST / PCB	74	UJ	76	UJ	18	U	19	U	18	U
4,4'-DDT	UG/KG	PEST / PCB	74	UJ	76	UJ	18	U	19	U	18	U
ALDRIN	UG/KG	PEST / PCB	37	UJ	38	UJ	9	U	9.6	U	9	U
ALPHA-BHC	UG/KG	PEST / PCB	37	UJ	38	UJ	9	U	9.6	U	9	U
ALPHA-CHLORDANE	UG/KG	PEST / PCB	370	UJ	380	UJ	90	U	96	U	90	U
BETA-BHC	UG/KG	PEST / PCB	37	UJ	38	UJ	9	U	9.6	U	9	U
DELTA-BHC	UG/KG	PEST / PCB	37	UJ	38	UJ	9	U	9.6	U	9	U
DIBUTYL CHLORENDATE	UG/KG	PEST / PCB	119		36		36		77		28	
DIELDRIN	UG/KG	PEST / PCB	74	UJ	76	UJ	18	U	19	U	18	U
ENDOSULFAN I	*UG/KG*	PEST / PCB	37	UJ	38	UJ	9	U	9.6	U	9	U

NAVSTA-SAN DIEGO
SITE 4 WATER

		SAMPLE NUMBER:	NS4-BH1-S01-5		NS4-BH1-S02-10		NS4-BH2-S01-5		NS4-BH2-S02-15		NS4-BH2-S03-5 FD	
		SAMPLING DATE:	01/24/91		01/24/91		01/24/91		01/24/91		01/24/91	
		BORING:	BH1		BH1		BH2		BH2		BH2	
		SITE:	NS4		NS4		NS4		NS4		NS4	
		DEPTH:	5		10		5		15		5 FD	
COMPOUND NAME	UNITS	TEST CODE	RESULT	QUALIFIER	RESULT	QUALIFIER	RESULT	QUALIFIER	RESULT	QUALIFIER	RESULT	QUALIFIER
ENDOSULFAN II	UG/KG	PEST / PCB	74	UJ	76	UJ	18	U	19	U	18	U
ENDOSULFAN SULFATE	UG/KG	PEST / PCB	74	UJ	76	UJ	18	U	19	U	18	U
ENDRIN	UG/KG	PEST / PCB	74	UJ	76	UJ	18	U	19	U	18	U
ENDRIN KETONE	UG/KG	PEST / PCB	74	UJ	76	UJ	18	U	19	U	18	U
GAMMA-BHC (LINDANE)	UG/KG	PEST / PCB	37	UJ	38	UJ	9	U	9.6	U	9	U
GAMMA-CHLORDANE	UG/KG	PEST / PCB	370	UJ	380	UJ	90	U	96	U	90	U
HEPTACHLOR	UG/KG	PEST / PCB	37	UJ	38	UJ	9	U	9.6	U	9	U
HEPTACHLOR EPOXIDE	UG/KG	PEST / PCB	37	UJ	38	UJ	9	U	9.6	U	9	U
METHOXYCHLOR	UG/KG	PEST / PCB	370	UJ	380	UJ	90	U	96	U	90	U
PCB-1016	UG/KG	PEST / PCB	370	UJ	380	UJ	90	U	96	U	90	U
PCB-1221	UG/KG	PEST / PCB	370	UJ	380	UJ	90	U	96	U	90	U
PCB-1232	UG/KG	PEST / PCB	370	UJ	380	UJ	90	U	96	U	90	U
PCB-1242	UG/KG	PEST / PCB	370	UJ	380	UJ	90	U	96	U	90	U
PCB-1248	UG/KG	PEST / PCB	740	UJ	380	UJ	90	U	96	U	90	U
PCB-1254	UG/KG	PEST / PCB	740	UJ	760	UJ	180	U	190	U	180	U
PCB-1260	UG/KG	PEST / PCB	740	UJ	760	UJ	180	U	190	U	180	U
TOXAPHENE	UG/KG	PEST / PCB	740	UJ	760	UJ	180	U	190	U	180	U
4,4'-DDD	UG/L	PEST / PCB										
4,4'-DDE	UG/L	PEST / PCB										
4,4'-DDT	UG/L	PEST / PCB										
ALDRIN	UG/L	PEST / PCB										
ALPHA-BHC	UG/L	PEST / PCB										
ALPHA-CHLORDANE	UG/L	PEST / PCB										
BETA-BHC	UG/L	PEST / PCB										
DELTA-BHC	UG/L	PEST / PCB										
DIBUTYL CHLORENDATE	UG/L	PEST / PCB										
DIELDRIN	UG/L	PEST / PCB										
ENDOSULFAN I	UG/L	PEST / PCB										
ENDOSULFAN II	UG/L	PEST / PCB										
ENDOSULFAN SULFATE	UG/L	PEST / PCB										
ENDRIN	UG/L	PEST / PCB										
ENDRIN KETONE	UG/L	PEST / PCB										
GAMMA-BHC (LINDANE)	UG/L	PEST / PCB										
GAMMA-CHLORDANE	UG/L	PEST / PCB										
HEPTACHLOR	UG/L	PEST / PCB										
HEPTACHLOR EPOXIDE	UG/L	PEST / PCB										
METHOXYCHLOR	UG/L	PEST / PCB										
PCB-1016	UG/L	PEST / PCB										
PCB-1221	UG/L	PEST / PCB										
PCB-1232	UG/L	PEST / PCB										
PCB-1242	UG/L	PEST / PCB										
PCB-1248	UG/L	PEST / PCB										
PCB-1254	UG/L	PEST / PCB										
PCB-1260	UG/L	PEST / PCB										
TOXAPHENE	UG/L	PEST / PCB										
DIESEL	MG/KG	TPHC	20		40		10	U	10	U	10	U
JP4	MG/KG	TPHC	10	U	10	U	10	U	10	U	10	U
JP5	MG/KG	TPHC	10	U	10	U	10	U	10	U	10	U
STODDARD	MG/KG	TPHC										
DIESEL	UG/KG	TPHC										
JP4	UG/KG	TPHC										

NAVSTA-SAN DIEGO
SITE 4 WATER

		SAMPLE NUMBER:	NS4-BH1-S01-5		NS4-BH1-S02-10		NS4-BH2-S01-5		NS4-BH2-S02-15		NS4-BH2-S03-5 FD	
		SAMPLING DATE:	01/24/91		01/24/91		01/24/91		01/24/91		01/24/91	
		BORING:	BH1		BH1		BH2		BH2		BH2	
		SITE:	NS4		NS4		NS4		NS4		NS4	
		DEPTH:	5		10		5		15		5 FD	
COMPOUND NAME	UNITS	TEST CODE	RESULT	QUALIFIER	RESULT	QUALIFIER	RESULT	QUALIFIER	RESULT	QUALIFIER	RESULT	QUALIFIER
JP5	UG/KG	TPHC										
STODDARD	UG/KG	TPHC										
BENZO(A)PYRENE	UG/L	TPHC										
STODDARD	UG/L	TPHC										
1,1,1-TRICHLOROETHANE	UG/KG	VOA	6	U	6	U	6	U	6	U	6	U
1,1,2,2-TETRACHLOROETHANE	UG/KG	VOA	6	U	6	U	6	U	6	U	6	U
1,1,2-TRICHLOROETHANE	UG/KG	VOA	6	U	6	U	6	U	6	U	6	U
1,1-DICHLOROETHANE	UG/KG	VOA	6	U	6	U	6	U	6	U	6	U
1,1-DICHLOROETHENE	UG/KG	VOA	6	U	6	U	6	U	6	U	6	U
1,2-DICHLOROETHANE	UG/KG	VOA	6	U	6	U	6	U	6	U	6	U
1,2-DICHLOROETHENE (TOTAL)	UG/KG	VOA	6	U	6	U	6	U	6	U	6	U
1,2-DICHLOROPROPANE	UG/KG	VOA	6	U	6	U	6	U	6	U	6	U
2-BUTANONE	UG/KG	VOA	11	U	12	U	11	U	12	U	10	J
2-HEXANONE	UG/KG	VOA	11	U	12	U	11	U	12	U	11	U
4-METHYL-2-PENTANONE	UG/KG	VOA	11	U	12	U	11	U	12	U	11	U
ACETONE	UG/KG	VOA	11	U	39		28	U	12	U	51	
BENZENE	UG/KG	VOA	6	U	6	U	6	U	6	U	6	U
BROMODICHLOROMETHANE	UG/KG	VOA	6	U	6	U	6	U	6	U	6	U
BROMOFORM	UG/KG	VOA	6	U	6	U	6	U	6	U	6	U
BROMOMETHANE	UG/KG	VOA	11	U	12	U	11	U	12	U	11	U
CARBON DISULFIDE	UG/KG	VOA	6	U	6	U	6	U	6	U	6	U
CARBON TETRACHLORIDE	UG/KG	VOA	6	U	6	U	6	U	6	U	6	U
CHLOROBENZENE	UG/KG	VOA	6	U	6	U	6	U	6	U	6	U
CHLOROETHANE	UG/KG	VOA	11	U	12	U	11	U	12	U	11	U
CHLOROFORM	UG/KG	VOA	6	U	6	U	6	U	6	U	6	U
CHLOROMETHANE	UG/KG	VOA	11	U	12	U	11	U	12	U	11	U
CIS-1,3-DICHLOROPROPENE	UG/KG	VOA	6	U	6	U	6	U	6	U	6	U
DIBROMOCHLOROMETHANE	UG/KG	VOA	6	U	6	U	6	U	6	U	6	U
ETHYLBENZENE	UG/KG	VOA	6	U	6	U	6	U	6	U	6	U
METHYLENE CHLORIDE	UG/KG	VOA	8	U	17	U	17	U	7	U	20	U
STYRENE	UG/KG	VOA	6	U	6	U	6	U	6	U	6	U
TETRACHLOROETHENE	UG/KG	VOA	6	U	6	U	6	U	6	U	6	U
TOLUENE	UG/KG	VOA	6	U	6	U	6	U	6	U	6	U
TRANS-1,3-DICHLOROPROPENE	UG/KG	VOA	6	U	6	U	6	U	6	U	6	U
TRICHLOROETHENE	UG/KG	VOA	6	U	6	U	6	U	6	U	6	U
VINYL ACETATE	UG/KG	VOA	11	U	12	U	11	U	12	U	11	U
VINYL CHLORIDE	UG/KG	VOA	11	U	12	U	11	U	12	U	11	U
XYLENES (TOTAL)	UG/KG	VOA	6	U	6	U	6	U	6	U	6	U
1,1,1-TRICHLOROETHANE	UG/L	VOA										
1,1,2,2-TETRACHLOROETHANE	UG/L	VOA										
1,1,2-TRICHLOROETHANE	UG/L	VOA										
1,1-DICHLOROETHANE	UG/L	VOA										
1,1-DICHLOROETHENE	UG/L	VOA										
1,2-DICHLOROETHANE	UG/L	VOA										
1,2-DICHLOROETHANE-D4	UG/L	VOA										
1,2-DICHLOROETHENE (TOTAL)	UG/L	VOA										
1,2-DICHLOROPROPANE	UG/L	VOA										
2-BUTANONE	UG/L	VOA										
2-HEXANONE	UG/L	VOA										
4-METHYL-2-PENTANONE	UG/L	VOA										
ACETONE	UG/L	VOA										

NAVSTA-SAN DIEGO
SITE 4 WATER

		SAMPLE NUMBER:	NS4-BH1-S01-5		NS4-BH1-S02-10		NS4-BH2-S01-5		NS4-BH2-S02-15		NS4-BH2-S03-5 FD	
		SAMPLING DATE:	01/24/91		01/24/91		01/24/91		01/24/91		01/24/91	
		BORING:	BH1		BH1		BH2		BH2		BH2	
		SITE:	NS4		NS4		NS4		NS4		NS4	
		DEPTH:	5		10		5		15		5 FD	
COMPOUND NAME	UNITS	TEST CODE	RESULT	QUALIFIER	RESULT	QUALIFIER	RESULT	QUALIFIER	RESULT	QUALIFIER	RESULT	QUALIFIER
BENZENE	UG/L	VOA										
BROMODICHLOROMETHANE	UG/L	VOA										
BROMOFLUOROBENZENE	UG/L	VOA										
BROMOFORM	UG/L	VOA										
BROMOMETHANE	UG/L	VOA										
CARBON DISULFIDE	UG/L	VOA										
CARBON TETRACHLORIDE	UG/L	VOA										
CHLOROBENZENE	UG/L	VOA										
CHLOROETHANE	UG/L	VOA										
CHLOROFORM	UG/L	VOA										
CHLOROMETHANE	UG/L	VOA										
CIS-1,3-DICHLOROPROPENE	UG/L	VOA										
DIBROMOCHLOROMETHANE	UG/L	VOA										
ETHYLBENZENE	UG/L	VOA										
METHYLENE CHLORIDE	UG/L	VOA										
STYRENE	UG/L	VOA										
TETRACHLOROETHENE	UG/L	VOA										
TOLUENE	UG/L	VOA										
TOLUENE-D8	UG/L	VOA										
TRANS-1,3-DICHLOROPROPENE	UG/L	VOA										
TRICHLOROETHENE	UG/L	VOA										
VINYL ACETATE	UG/L	VOA										
VINYL CHLORIDE	UG/L	VOA										
XYLENES (TOTAL)	UG/L	VOA										

NAVSTA-SAN DIEGO
SITE 4 WATER

		SAMPLE NUMBER:	NS4-BH3-S01-5		NS4-BH3-S02-10		NS4-BH4-S01-5		NS4-BH4-S02-15		NS4-BH5-S01-10	
		SAMPLING DATE:	01/25/91		01/25/91		01/25/91		01/25/91		01/29/91	
		BORING:	BH3		BH3		BH4		BH4		BH5	
		SITE:	NS4		NS4		NS4		NS4		NS4	
		DEPTH:	5		10		5		15		10	
COMPOUND NAME	UNITS	TEST CODE	RESULT	QUALIFIER	RESULT	QUALIFIER	RESULT	QUALIFIER	RESULT	QUALIFIER	RESULT	QUALIFIER
1,2,4-TRICHLOROBENZENE	UG/KG	BNA	3400	U	410	U	350	U	500	U	520	U
1,2-DICHLOROBENZENE	UG/KG	BNA	3400	U	410	U	350	U	500	U	520	U
1,3-DICHLOROBENZENE	UG/KG	BNA	3400	U	410	U	350	U	500	U	520	U
1,4-DICHLOROBENZENE	UG/KG	BNA	3400	U	410	U	350	U	500	U	520	U
2,4,5-TRICHLOROPHENOL	UG/KG	BNA	17000	U	2000	U	1700	U	2400	U	2500	U
2,4,6-TRICHLOROPHENOL	UG/KG	BNA	3400	U	410	U	350	U	500	U	520	U
2,4-DICHLOROPHENOL	UG/KG	BNA	3400	U	410	U	350	U	500	U	520	U
2,4-DIMETHYLPHENOL	UG/KG	BNA	3400	U	410	U	350	U	500	U	520	U
2,4-DINITROPHENOL	UG/KG	BNA	17000	U	2000	U	1700	U	2400	U	2500	U
2,4-DINITROTOLUENE	UG/KG	BNA	3400	U	410	U	350	U	500	U	520	U
2,6-DINITROTOLUENE	UG/KG	BNA	3400	U	410	U	350	U	500	U	520	U
2-CHLORONAPHTHALENE	UG/KG	BNA	3400	U	410	U	350	U	500	U	520	U
2-CHLOROPHENOL	UG/KG	BNA	3400	U	410	U	350	U	500	U	520	U
2-METHYLNAPHTHALENE	UG/KG	BNA	3400	U	410	U	350	U	500	U	520	U
2-METHYLPHENOL	UG/KG	BNA	3400	U	410	U	350	U	500	U	520	U
2-NITROANILINE	UG/KG	BNA	17000	U	2000	U	1700	U	2400	U	2500	U
2-NITROPHENOL	UG/KG	BNA	3400	U	410	U	350	U	500	U	520	U
3,3'-DICHLOROBENZIDINE	UG/KG	BNA	6900	U	820	U	690	U	1000	U	1000	U
3-NITROANILINE	UG/KG	BNA	17000	U	2000	U	1700	U	2400	U	2500	U
4,6-DINITRO-2-METHYLPHENOL	UG/KG	BNA	17000	U	2000	U	1700	U	2400	U	2500	U
4-BROMOPHENYL-PHENYLETHER	UG/KG	BNA	3400	U	410	U	350	U	500	U	520	U
4-CHLORO-3-METHYLPHENOL	UG/KG	BNA	3400	U	410	U	350	U	500	U	520	U
4-CHLOROANILINE	UG/KG	BNA	3400	U	410	U	350	U	500	U	520	U
4-CHLOROPHENYL-PHENYLETHER	UG/KG	BNA	3400	U	410	U	350	U	500	U	520	U
4-METHYLPHENOL	UG/KG	BNA	3400	U	410	U	350	U	500	U	520	U
4-NITROANILINE	UG/KG	BNA	17000	U	2000	U	1700	U	2400	U	2500	U
4-NITROPHENOL	UG/KG	BNA	17000	U	2000	U	1700	U	2400	U	2500	U
ACENAPHTHENE	UG/KG	BNA	3400	U	410	U	350	U	500	U	520	U
ACENAPHTHYLENE	UG/KG	BNA	3400	U	410	U	350	U	500	U	520	U
ANTHRACENE	UG/KG	BNA	3400	U	410	U	350	U	500	U	520	U
BENZO(A)ANTHRACENE	UG/KG	BNA	3400	U	410	U	350	U	500	U	520	U
BENZO(A)PYRENE	UG/KG	BNA	3400	U	410	U	350	U	500	U	520	U
BENZO(B)FLUORANTHENE	UG/KG	BNA	3400	U	410	U	350	U	500	U	520	U
BENZO(G,H,I)PERYLENE	UG/KG	BNA	3400	U	410	U	350	U	500	U	520	U
BENZO(K)FLUORANTHENE	UG/KG	BNA	3400	U	410	U	350	U	500	U	520	U
BENZOIC ACID	UG/KG	BNA	17000	U	2000	U	1700	U	2400	U	2500	U
BENZYL ALCOHOL	UG/KG	BNA	3400	U	410	U	350	U	500	U	520	U
BIS(2-CHLOROETHOXY)METHANE	UG/KG	BNA	3400	U	410	U	350	U	500	U	520	U
BIS(2-CHLOROETHYL)ETHER	UG/KG	BNA	3400	U	410	U	350	U	500	U	520	U
BIS(2-CHLOROISOPROPYL)ETHER	UG/KG	BNA	3400	U	410	U	350	U	500	U	520	U
BIS(2-ETHYLHEXYL)PHTHALATE	UG/KG	BNA	3400	U	410	U	350	U	500	U	520	U
BUTYLBENZYLPHTHALATE	UG/KG	BNA	3400	U	410	U	350	U	500	U	520	U
CHRYSENE	UG/KG	BNA	3400	U	410	U	350	U	500	U	520	U
DI-N-BUTYLPHTHALATE	UG/KG	BNA	3400	U	410	U	350	U	500	U	520	U
DI-N-OCTYLPHTHALATE	UG/KG	BNA	3400	U	410	U	350	U	500	U	520	U
DIBENZ(A,H)ANTHRACENE	UG/KG	BNA	3400	U	410	U	350	U	500	U	520	U
DIBENZOFURAN	UG/KG	BNA	3400	U	410	U	350	U	500	U	520	U
DIETHYLPHTHALATE	UG/KG	BNA	3400	U	410	U	350	U	500	U	520	U
DIMETHYLPHTHALATE	UG/KG	BNA	3400	U	410	U	350	U	500	U	520	U
FLUORANTHENE	UG/KG	BNA	3400	U	410	U	350	U	500	U	520	U
FLUORENE	UG/KG	BNA	3400	U	410	U	350	U	500	U	520	U

NAVSTA-SAN DIEGO
SITE 4 WATER

		SAMPLE NUMBER:	NS4-BH3-S01-5		NS4-BH3-S02-10		NS4-BH4-S01-5		NS4-BH4-S02-15		NS4-BH5-S01-10	
		SAMPLING DATE:	01/25/91		01/25/91		01/25/91		01/25/91		01/29/91	
		BORING:	BH3		BH3		BH4		BH4		BH5	
		SITE:	NS4		NS4		NS4		NS4		NS4	
		DEPTH:	5		10		5		15		10	
COMPOUND NAME	UNITS	TEST CODE	RESULT	QUALIFIER	RESULT	QUALIFIER	RESULT	QUALIFIER	RESULT	QUALIFIER	RESULT	QUALIFIER
HEXACHLOROBENZENE	UG/KG	BNA	3400	U	410	U	350	U	500	U	520	U
HEXACHLOROBUTADIENE	UG/KG	BNA	3400	U	410	U	350	U	500	U	520	U
HEXACHLOROCYCLOPENTADIENE	UG/KG	BNA	3400	U	410	U	350	U	500	U	520	U
HEXACHLOROETHANE	UG/KG	BNA	3400	U	410	U	350	U	500	U	520	U
INDENO(1,2,3-C,D)PYRENE	UG/KG	BNA	3400	U	410	U	350	U	500	U	520	U
ISOPHORONE	UG/KG	BNA	3400	U	410	U	350	U	500	U	520	U
N-NITROSO-DI-N-PROPYLAMINE	UG/KG	BNA	3400	U	410	U	350	U	500	U	520	U
N-NITROSODIPHENYLAMINE (1)	UG/KG	BNA	3400	U	410	U	350	U	500	U	520	U
NAPHTHALENE	UG/KG	BNA	3400	U	410	U	350	U	500	U	520	U
NITROBENZENE	UG/KG	BNA	3400	U	410	U	350	U	500	U	520	U
PENTACHLOROPHENOL	UG/KG	BNA	17000	U	2000	U	1700	U	2400	U	2500	U
PHENANTHRENE	UG/KG	BNA	3400	U	410	U	350	U	500	U	520	U
PHENOL	UG/KG	BNA	3400	U	410	U	350	U	500	U	520	U
PYRENE	UG/KG	BNA	3400	U	410	U	350	U	500	U	520	U
1,2,4-TRICHLOROBENZENE	UG/L	BNA										
1,2-DICHLOROBENZENE	UG/L	BNA										
1,3-DICHLOROBENZENE	UG/L	BNA										
1,4-DICHLOROBENZENE	UG/L	BNA										
2,4,5-TRICHLOROPHENOL	UG/L	BNA										
2,4,6-TRIBROMOPHENOL	UG/L	BNA										
2,4,6-TRICHLOROPHENOL	UG/L	BNA										
2,4-DICHLOROPHENOL	UG/L	BNA										
2,4-DIMETHYLPHENOL	UG/L	BNA										
2,4-DINITROPHENOL	UG/L	BNA										
2,4-DINITROTOLUENE	UG/L	BNA										
2,6-DINITROTOLUENE	UG/L	BNA										
2-CHLORONAPHTHALENE	UG/L	BNA										
2-CHLOROPHENOL	UG/L	BNA										
2-FLUOROBIPHENYL	UG/L	BNA										
2-FLUOROPHENOL	UG/L	BNA										
2-METHYLNAPHTHALENE	UG/L	BNA										
2-METHYLPHENOL	UG/L	BNA										
2-NITROANILINE	UG/L	BNA										
2-NITROPHENOL	UG/L	BNA										
3,3'-DICHLOROBENZIDINE	UG/L	BNA										
3-NITROANILINE	UG/L	BNA										
4,6-DINITRO-2-METHYLPHENOL	UG/L	BNA										
4-BROMOPHENYL-PHENYLETHER	UG/L	BNA										
4-CHLORO-3-METHYLPHENOL	UG/L	BNA										
4-CHLOROANILINE	UG/L	BNA										
4-CHLOROPHENYL-PHENYLETHER	UG/L	BNA										
4-METHYLPHENOL	UG/L	BNA										
4-NITROANILINE	UG/L	BNA										
4-NITROPHENOL	UG/L	BNA										
ACENAPHTHENE	UG/L	BNA										
ACENAPHTHYLENE	UG/L	BNA										
ANTHRACENE	UG/L	BNA										
BENZO(A)ANTHRACENE	UG/L	BNA										
BENZO(A)PYRENE	UG/L	BNA										
BENZO(B)FLUORANTHENE	UG/L	BNA										
BENZO(G,H,I)PERYLENE	UG/L	BNA										

NAVSTA-SAN DIEGO
SITE 4 WATER

		SAMPLE NUMBER:	NS4-BH3-S01-5		NS4-BH3-S02-10		NS4-BH4-S01-5		NS4-BH4-S02-15		NS4-BH5-S01-10	
		SAMPLING DATE:	01/25/91		01/25/91		01/25/91		01/25/91		01/29/91	
		BORING:	BH3		BH3		BH4		BH4		BH5	
		SITE:	NS4		NS4		NS4		NS4		NS4	
		DEPTH:	5		10		5		15		10	
COMPOUND NAME	UNITS	TEST CODE	RESULT	QUALIFIER	RESULT	QUALIFIER	RESULT	QUALIFIER	RESULT	QUALIFIER	RESULT	QUALIFIER
BENZO(K)FLUORANTHENE	UG/L	BNA										
BENZOIC ACID	UG/L	BNA										
BENZYL ALCOHOL	UG/L	BNA										
BIS(2-CHLOROETHOXY)METHANE	UG/L	BNA										
BIS(2-CHLOROETHYL)ETHER	UG/L	BNA										
BIS(2-CHLOROISOPROPYL)ETHER	UG/L	BNA										
BIS(2-ETHYLHEXYL)PHTHALATE	UG/L	BNA										
BUTYLBENZYLPHTHALATE	UG/L	BNA										
CHRYSENE	UG/L	BNA										
DI-N-BUTYLPHTHALATE	UG/L	BNA										
DI-N-OCTYLPHTHALATE	UG/L	BNA										
DIBENZ(A,H)ANTHRACENE	UG/L	BNA										
DIBENZO(A,H)ANTHRACENE	UG/L	BNA										
DIBENZOFURAN	UG/L	BNA										
DIETHYLPHTHALATE	UG/L	BNA										
DIMETHYLPHTHALATE	UG/L	BNA										
FLUORANTHENE	UG/L	BNA										
FLUORENE	UG/L	BNA										
HEXACHLOROBENZENE	UG/L	BNA										
HEXACHLOROBUTADIENE	UG/L	BNA										
HEXACHLOROCYCLOPENTADIENE	UG/L	BNA										
HEXACHLOROETHANE	UG/L	BNA										
INDENO(1,2,3-C,D)PYRENE	UG/L	BNA										
ISOPHORONE	UG/L	BNA										
N-NITROSO-DI-N-PROPYLAMINE	UG/L	BNA										
N-NITROSODIPHENYLAMINE (1)	UG/L	BNA										
NAPHTHALENE	UG/L	BNA										
NITROBENZENE	UG/L	BNA										
NITROBENZENE-D5	UG/L	BNA										
PENTACHLOROPHENOL	UG/L	BNA										
PHENANTHRENE	UG/L	BNA										
PHENOL	UG/L	BNA										
PHENOL-D5	UG/L	BNA										
PYRENE	UG/L	BNA										
TERPHENYL-D14	UG/L	BNA										
ANTIMONY	MG/KG	CAC METALS	3.7	U	4.5	U	3.9	U	5.5	U	5.9	U
ARSENIC	MG/KG	CAC METALS	1.4	B	2.8		3.6		6.3		5.9	B
BARIUM	MG/KG	CAC METALS	26.8	B	28.3	B	29.7	B	49.9	B	125	
BERYLLIUM	MG/KG	CAC METALS	0.79	B	0.96	B	0.90	B	2.4		4.1	
CADMIUM	MG/KG	CAC METALS	0.79	U	0.94	U	0.82	U	1.2	U	1.2	U
CHROMIUM	MG/KG	CAC METALS	5.1		6.4		4.9		20.3		25.6	
COBALT	MG/KG	CAC METALS	3.0	B	2.4	B	2.4	B	7.2	B	12.6	B
COPPER	MG/KG	CAC METALS	6.9	U	7.2	U	12.6	U	27.6	U	25.7	U
LEAD	MG/KG	CAC METALS	3.8	U	2.5	U	7.5		5.0	U	15.7	
MERCURY	MG/KG	CAC METALS	0.16	U	0.19	U	0.16	U	0.23	U	0.58	
MOLYBDENUM	MG/KG	CAC METALS	1.4	U	2.1	U	1.7	U	9.1	U	3.3	U
NICKEL	MG/KG	CAC METALS	1.8	U	2.1	U	1.9	U	4.8	B	6.0	U
SELENIUM	MG/KG	CAC METALS	0.39	U	0.47	U	0.41	U	0.58	U	0.62	U
SILVER	MG/KG	CAC METALS	1.4	U	0.97	U	1.1	U	1.5	U	3.4	U
THALLIUM	MG/KG	CAC METALS	0.19	U	0.23	U	0.20	U	0.29	B	0.62	U
VANADIUM	MG/KG	CAC METALS	19.8		15.2		18.7		56.7		73.9	

NAVSTA-SAN DIEGO
SITE 4 WATER

		SAMPLE NUMBER:	NS4-BH3-S01-5		NS4-BH3-S02-10		NS4-BH4-S01-5		NS4-BH4-S02-15		NS4-BH5-S01-10	
		SAMPLING DATE:	01/25/91		01/25/91		01/25/91		01/25/91		01/29/91	
		BORING:	BH3		BH3		BH4		BH4		BH5	
		SITE:	NS4		NS4		NS4		NS4		NS4	
		DEPTH:	5		10		5		15		10	
COMPOUND NAME	UNITS	TEST CODE	RESULT	QUALIFIER	RESULT	QUALIFIER	RESULT	QUALIFIER	RESULT	QUALIFIER	RESULT	QUALIFIER
ZINC	MG/KG	CAC METALS	19.3	U	20.1	U	34.9	U	42.2	U	77.8	U
ANTIMONY	UG/KG	CAC METALS										
ARSENIC	UG/KG	CAC METALS										
BARIUM	UG/KG	CAC METALS										
BERYLLIUM	UG/KG	CAC METALS										
CADMIUM	UG/KG	CAC METALS										
CHROMIUM	UG/KG	CAC METALS										
COBALT	UG/KG	CAC METALS										
COPPER	UG/KG	CAC METALS										
LEAD	UG/KG	CAC METALS										
MERCURY	UG/KG	CAC METALS										
MOLYBDENUM	UG/KG	CAC METALS										
NICKEL	UG/KG	CAC METALS										
SELENIUM	UG/KG	CAC METALS										
SILVER	UG/KG	CAC METALS										
THALLIUM	UG/KG	CAC METALS										
VANADIUM	UG/KG	CAC METALS										
ZINC	UG/KG	CAC METALS										
ANTIMONY	UG/L	CAC METALS										
ARSENIC	UG/L	CAC METALS										
BARIUM	UG/L	CAC METALS										
BERYLLIUM	UG/L	CAC METALS										
CADMIUM	UG/L	CAC METALS										
CHROMIUM	UG/L	CAC METALS										
COBALT	UG/L	CAC METALS										
COPPER	UG/L	CAC METALS										
LEAD	UG/L	CAC METALS										
MERCURY	UG/L	CAC METALS										
MOLYBDENUM	UG/L	CAC METALS										
NICKEL	UG/L	CAC METALS										
SELENIUM	UG/L	CAC METALS										
SILVER	UG/L	CAC METALS										
THALLIUM	UG/L	CAC METALS										
VANADIUM	UG/L	CAC METALS										
ZINC	UG/L	CAC METALS										
CAC WET EXTRACTION	DATE	CAC WET EX										
COPPER	MG/L	CAC WET EX										
LEAD	MG/L	CAC WET EX										
TOTAL CYANIDE	MG/KG	CN	1	UJ	1	UJ	1	UJ	1	UJ	1	U
TOTAL CYANIDE	MG/L	CN										
4,4'-DDD	UG/KG	PEST / PCB	50	U	20	U	17	U	24	U	25	U
4,4'-DDE	UG/KG	PEST / PCB	50	U	20	U	17	U	24	U	25	U
4,4'-DDT	UG/KG	PEST / PCB	50	U	20	U	17	U	24	U	25	U
ALDRIN	UG/KG	PEST / PCB	25	U	10	U	8.4	U	12	U	13	U
ALPHA-BHC	UG/KG	PEST / PCB	25	U	10	U	8.4	U	12	U	13	U
ALPHA-CHLORDANE	UG/KG	PEST / PCB	250	U	100	U	84	U	120	U	130	U
BETA-BHC	UG/KG	PEST / PCB	25	U	10	U	8.4	U	12	U	13	U
DELTA-BHC	UG/KG	PEST / PCB	25	U	10	U	8.4	U	12	U	13	U
DIBUTYL CHLORENDATE	UG/KG	PEST / PCB	101		93		104		60		64	
DIELDRIN	UG/KG	PEST / PCB	50	U	20	U	17	U	24	U	25	U
ENDOSULFAN I	UG/KG	PEST / PCB	25	U	10	U	8.4	U	12	U	13	U

NAVSTA-SAN DIEGO
SITE 4 WATER

		SAMPLE NUMBER:	NS4-BH3-S01-5		NS4-BH3-S02-10		NS4-BH4-S01-5		NS4-BH4-S02-15		NS4-BH5-S01-10	
		SAMPLING DATE:	01/25/91		01/25/91		01/25/91		01/25/91		01/29/91	
		BORING:	BH3		BH3		BH4		BH4		BH5	
		SITE:	NS4		NS4		NS4		NS4		NS4	
		DEPTH:	5		10		5		15		10	
COMPOUND NAME	UNITS	TEST CODE	RESULT	QUALIFIER	RESULT	QUALIFIER	RESULT	QUALIFIER	RESULT	QUALIFIER	RESULT	QUALIFIER
ENDOSULFAN II	UG/KG	PEST / PCB	50	U	20	U	17	U	24	U	25	U
ENDOSULFAN SULFATE	UG/KG	PEST / PCB	50	U	20	U	17	U	24	U	25	U
ENDRIN	UG/KG	PEST / PCB	50	U	20	U	17	U	24	U	25	U
ENDRIN KETONE	UG/KG	PEST / PCB	50	U	20	U	17	U	24	U	25	U
GAMMA-BHC (LINDANE)	UG/KG	PEST / PCB	25	U	10	U	8.4	U	12	U	13	U
GAMMA-CHLORDANE	UG/KG	PEST / PCB	250	U	100	U	84	U	120	U	130	U
HEPTACHLOR	UG/KG	PEST / PCB	25	U	10	U	8.4	U	12	U	13	U
HEPTACHLOR EPOXIDE	UG/KG	PEST / PCB	25	U	10	U	8.4	U	12	U	13	U
METHOXYCHLOR	UG/KG	PEST / PCB	250	U	100	U	84	U	120	U	130	U
PCB-1016	UG/KG	PEST / PCB	250	U	100	U	84	U	120	U	130	U
PCB-1221	UG/KG	PEST / PCB	250	U	100	U	84	U	120	U	130	U
PCB-1232	UG/KG	PEST / PCB	250	U	100	U	84	U	120	U	130	U
PCB-1242	UG/KG	PEST / PCB	250	U	100	U	84	U	120	U	130	U
PCB-1248	UG/KG	PEST / PCB	250	U	100	U	84	U	120	U	130	U
PCB-1254	UG/KG	PEST / PCB	500	U	200	U	170	U	240	U	250	U
PCB-1260	UG/KG	PEST / PCB	500	U	200	U	170	U	240	U	250	U
TOXAPHENE	UG/KG	PEST / PCB	500	U	200	U	170	U	240	U	250	U
4,4'-DDD	UG/L	PEST / PCB										
4,4'-DDE	UG/L	PEST / PCB										
4,4'-DDT	UG/L	PEST / PCB										
ALDRIN	UG/L	PEST / PCB										
ALPHA-BHC	UG/L	PEST / PCB										
ALPHA-CHLORDANE	UG/L	PEST / PCB										
BETA-BHC	UG/L	PEST / PCB										
DELTA-BHC	UG/L	PEST / PCB										
DIBUTYL CHLORENDATE	UG/L	PEST / PCB										
DIELDRIN	UG/L	PEST / PCB										
ENDOSULFAN I	UG/L	PEST / PCB										
ENDOSULFAN II	UG/L	PEST / PCB										
ENDOSULFAN SULFATE	UG/L	PEST / PCB										
ENDRIN	UG/L	PEST / PCB										
ENDRIN KETONE	UG/L	PEST / PCB										
GAMMA-BHC (LINDANE)	UG/L	PEST / PCB										
GAMMA-CHLORDANE	UG/L	PEST / PCB										
HEPTACHLOR	UG/L	PEST / PCB										
HEPTACHLOR EPOXIDE	UG/L	PEST / PCB										
METHOXYCHLOR	UG/L	PEST / PCB										
PCB-1016	UG/L	PEST / PCB										
PCB-1221	UG/L	PEST / PCB										
PCB-1232	UG/L	PEST / PCB										
PCB-1242	UG/L	PEST / PCB										
PCB-1248	UG/L	PEST / PCB										
PCB-1254	UG/L	PEST / PCB										
PCB-1260	UG/L	PEST / PCB										
TOXAPHENE	UG/L	PEST / PCB										
DIESEL	MG/KG	TPHC	20		10	U	10	U	10	U		
JP4	MG/KG	TPHC	10	U	10	U	10	U	10	U		
JP5	MG/KG	TPHC	10	U	10	U	10	U	10	U		
STODDARD	MG/KG	TPHC									10	U
DIESEL	UG/KG	TPHC										
JP4	UG/KG	TPHC										

NAVSTA-SAN DIEGO
SITE 4 WATER

		SAMPLE NUMBER:	NS4-BH3-S01-5		NS4-BH3-S02-10		NS4-BH4-S01-5		NS4-BH4-S02-15		NS4-BH5-S01-10	
		SAMPLING DATE:	01/25/91		01/25/91		01/25/91		01/25/91		01/29/91	
		BORING:	BH3		BH3		BH4		BH4		BH5	
		SITE:	NS4		NS4		NS4		NS4		NS4	
		DEPTH:	5		10		5		15		10	
COMPOUND NAME	UNITS	TEST CODE	RESULT	QUALIFIER	RESULT	QUALIFIER	RESULT	QUALIFIER	RESULT	QUALIFIER	RESULT	QUALIFIER
JP5	UG/KG	TPHC										
STODDARD	UG/KG	TPHC										
BENZO(A)PYRENE	UG/L	TPHC										
STODDARD	UG/L	TPHC										
1,1,1-TRICHLOROETHANE	UG/KG	VOA	5	U	6	U	5	U	8	U	8	U
1,1,2,2-TETRACHLOROETHANE	UG/KG	VOA	5	U	6	U	5	U	8	U	8	U
1,1,2-TRICHLOROETHANE	UG/KG	VOA	5	U	6	U	5	U	8	U	8	U
1,1-DICHLOROETHANE	UG/KG	VOA	5	U	6	U	5	U	8	U	8	U
1,1-DICHLOROETHENE	UG/KG	VOA	5	U	6	U	5	U	8	U	8	U
1,2-DICHLOROETHANE	UG/KG	VOA	5	U	6	U	5	U	8	U	8	U
1,2-DICHLOROETHENE (TOTAL)	UG/KG	VOA	5	U	6	U	5	U	8	U	8	U
1,2-DICHLOROPROPANE	UG/KG	VOA	5	U	6	U	5	U	8	U	8	U
2-BUTANONE	UG/KG	VOA	10	U	12	U	11	U	15	U	16	U
2-HEXANONE	UG/KG	VOA	10	U	12	U	11	U	15	U	16	U
4-METHYL-2-PENTANONE	UG/KG	VOA	10	U	12	U	11	U	15	U	16	U
ACETONE	UG/KG	VOA	10	U	15	U	11	U	20	U	60	U
BENZENE	UG/KG	VOA	5	U	6	U	5	U	8	U	8	U
BROMODICHLOROMETHANE	UG/KG	VOA	5	U	6	U	5	U	8	U	8	U
BROMOFORM	UG/KG	VOA	5	U	6	U	5	U	8	U	8	U
BROMOMETHANE	UG/KG	VOA	10	U	12	U	11	U	15	U	16	U
CARBON DISULFIDE	UG/KG	VOA	5	U	6	U	5	U	250		19	
CARBON TETRACHLORIDE	UG/KG	VOA	5	U	6	U	5	U	8	U	8	U
CHLOROBENZENE	UG/KG	VOA	5	U	6	U	5	U	8	U	8	U
CHLOROETHANE	UG/KG	VOA	10	U	12	U	11	U	15	U	16	U
CHLOROFORM	UG/KG	VOA	5	U	6	U	5	U	8	U	8	U
CHLOROMETHANE	UG/KG	VOA	10	U	12	U	11	U	15	U	16	U
CIS-1,3-DICHLOROPROPENE	UG/KG	VOA	5	U	6	U	5	U	8	U	8	U
DIBROMOCHLOROMETHANE	UG/KG	VOA	5	U	6	U	5	U	8	U	8	U
ETHYLBENZENE	UG/KG	VOA	5	U	6	U	5	U	8	U	8	U
METHYLENE CHLORIDE	UG/KG	VOA	7	U	11	U	8	U	14	U	11	U
STYRENE	UG/KG	VOA	5	U	6	U	5	U	8	U	8	U
TETRACHLOROETHENE	UG/KG	VOA	5	U	6	U	5	U	8	U	8	U
TOLUENE	UG/KG	VOA	5	U	6	U	5	U	8	U	8	U
TRANS-1,3-DICHLOROPROPENE	UG/KG	VOA	5	U	6	U	5	U	8	U	8	U
TRICHLOROETHENE	UG/KG	VOA	5	U	6	U	5	U	8	U	8	U
VINYL ACETATE	UG/KG	VOA	10	U	12	U	11	U	15	U	16	U
VINYL CHLORIDE	UG/KG	VOA	10	U	12	U	11	U	15	U	16	U
XYLENES (TOTAL)	UG/KG	VOA	5	U	6	U	5	U	8	U	8	U
1,1,1-TRICHLOROETHANE	UG/L	VOA										
1,1,2,2-TETRACHLOROETHANE	UG/L	VOA										
1,1,2-TRICHLOROETHANE	UG/L	VOA										
1,1-DICHLOROETHANE	UG/L	VOA										
1,1-DICHLOROETHENE	UG/L	VOA										
1,2-DICHLOROETHANE	UG/L	VOA										
1,2-DICHLOROETHANE-D4	UG/L	VOA										
1,2-DICHLOROETHENE (TOTAL)	UG/L	VOA										
1,2-DICHLOROPROPANE	UG/L	VOA										
2-BUTANONE	UG/L	VOA										
2-HEXANONE	UG/L	VOA										
4-METHYL-2-PENTANONE	UG/L	VOA										
ACETONE	UG/L	VOA										

NAVSTA-SAN DIEGO
SITE 4 WATER

		SAMPLE NUMBER:	NS4-BH3-S01-5		NS4-BH3-S02-10		NS4-BH4-S01-5		NS4-BH4-S02-15		NS4-BH5-S01-10	
		SAMPLING DATE:	01/25/91		01/25/91		01/25/91		01/25/91		01/29/91	
		BORING:	BH3		BH3		BH4		BH4		BH5	
		SITE:	NS4		NS4		NS4		NS4		NS4	
		DEPTH:	5		10		5		15		10	
COMPOUND NAME	UNITS	TEST CODE	RESULT	QUALIFIER	RESULT	QUALIFIER	RESULT	QUALIFIER	RESULT	QUALIFIER	RESULT	QUALIFIER
BENZENE	UG/L	VOA										
BROMODICHLOROMETHANE	UG/L	VOA										
BROMOFLUOROBENZENE	UG/L	VOA										
BROMOFORM	UG/L	VOA										
BROMOMETHANE	UG/L	VOA										
CARBON DISULFIDE	UG/L	VOA										
CARBON TETRACHLORIDE	UG/L	VOA										
CHLOROBENZENE	UG/L	VOA										
CHLOROETHANE	UG/L	VOA										
CHLOROFORM	UG/L	VOA										
CHLOROMETHANE	UG/L	VOA										
CIS-1,3-DICHLOROPROPENE	UG/L	VOA										
DIBROMOCHLOROMETHANE	UG/L	VOA										
ETHYLBENZENE	UG/L	VOA										
METHYLENE CHLORIDE	UG/L	VOA										
STYRENE	UG/L	VOA										
TETRACHLOROETHENE	UG/L	VOA										
TOLUENE	UG/L	VOA										
TOLUENE-D8	UG/L	VOA										
TRANS-1,3-DICHLOROPROPENE	UG/L	VOA										
TRICHLOROETHENE	UG/L	VOA										
VINYL ACETATE	UG/L	VOA										
VINYL CHLORIDE	UG/L	VOA										
XYLENES (TOTAL)	UG/L	VOA										

NAVSTA-SAN DIEGO
SITE 4 WATER

		SAMPLE NUMBER:	NS4-BH5-S02-15		NS4-BH6-S01-5		NS4-BH6-S02-10		NS4-BH6-S03-5-FD		NS4-BH6-S06-15	
		SAMPLING DATE:	01/29/91		01/28/91		01/28/91		01/28/91		01/28/91	
		BORING:	BH5		BH6		BH6		BH6		BH6	
		SITE:	NS4		NS4		NS4		NS4		NS4	
		DEPTH:	15		5		10		5-FD		15	
COMPOUND NAME	UNITS	TEST CODE	RESULT	QUALIFIER	RESULT	QUALIFIER	RESULT	QUALIFIER	RESULT	QUALIFIER	RESULT	QUALIFIER
1,2,4-TRICHLOROBENZENE	UG/KG	BNA	470	U	340	U	410	U	350	U	460	U
1,2-DICHLOROBENZENE	UG/KG	BNA	470	U	340	U	410	U	350	U	460	U
1,3-DICHLOROBENZENE	UG/KG	BNA	470	U	340	U	410	U	350	U	460	U
1,4-DICHLOROBENZENE	UG/KG	BNA	470	U	340	U	410	U	350	U	460	U
2,4,5-TRICHLOROPHENOL	UG/KG	BNA	2300	U	1700	U	2000	U	1700	U	2200	U
2,4,6-TRICHLOROPHENOL	UG/KG	BNA	470	U	340	U	410	U	350	U	460	U
2,4-DICHLOROPHENOL	UG/KG	BNA	470	U	340	U	410	U	350	U	460	U
2,4-DIMETHYLPHENOL	UG/KG	BNA	470	U	340	U	410	U	350	U	460	U
2,4-DINITROPHENOL	UG/KG	BNA	2300	U	1700	U	2000	U	1700	U	2200	U
2,4-DINITROTOLUENE	UG/KG	BNA	470	U	340	U	410	U	350	U	460	U
2,6-DINITROTOLUENE	UG/KG	BNA	470	U	340	U	410	U	350	U	460	U
2-CHLORONAPHTHALENE	UG/KG	BNA	470	U	340	U	410	U	350	U	460	U
2-CHLOROPHENOL	UG/KG	BNA	470	U	340	U	410	U	350	U	460	U
2-METHYLNAPHTHALENE	UG/KG	BNA	470	U	340	U	410	U	350	U	460	U
2-METHYLPHENOL	UG/KG	BNA	470	U	340	U	410	U	350	U	460	U
2-NITROANILINE	UG/KG	BNA	2300	U	1700	U	2000	U	1700	U	2200	U
2-NITROPHENOL	UG/KG	BNA	470	U	340	U	410	U	350	U	460	U
3,3'-DICHLOROBENZIDINE	UG/KG	BNA	940	U	690	U	820	U	710	U	920	U
3-NITROANILINE	UG/KG	BNA	2300	U	1700	U	2000	U	1700	U	2200	U
4,6-DINITRO-2-METHYLPHENOL	UG/KG	BNA	2300	U	1700	U	2000	U	1700	U	2200	U
4-BROMOPHENYL-PHENYLETHER	UG/KG	BNA	470	U	340	U	410	U	350	U	460	U
4-CHLORO-3-METHYLPHENOL	UG/KG	BNA	470	U	340	U	410	U	350	U	460	U
4-CHLOROANILINE	UG/KG	BNA	470	U	340	U	410	U	350	U	460	U
4-CHLOROPHENYL-PHENYLETHER	UG/KG	BNA	470	U	340	U	410	U	350	U	460	U
4-METHYLPHENOL	UG/KG	BNA	470	U	340	U	410	U	350	U	460	U
4-NITROANILINE	UG/KG	BNA	2300	U	1700	U	2000	U	1700	U	2200	U
4-NITROPHENOL	UG/KG	BNA	2300	U	1700	U	2000	U	1700	U	2200	U
ACENAPHTHENE	UG/KG	BNA	470	U	340	U	410	U	350	U	460	U
ACENAPHTHYLENE	UG/KG	BNA	470	U	340	U	410	U	350	U	460	U
ANTHRACENE	UG/KG	BNA	470	U	340	U	410	U	350	U	460	U
BENZO(A)ANTHRACENE	UG/KG	BNA	470	U	340	U	410	U	350	U	460	U
BENZO(A)PYRENE	UG/KG	BNA	470	U	340	U	410	U	350	U	460	U
BENZO(B)FLUORANTHENE	UG/KG	BNA	470	U	340	U	410	U	350	U	460	U
BENZO(G,H,I)PERYLENE	UG/KG	BNA	470	U	340	U	410	U	350	U	460	U
BENZO(K)FLUORANTHENE	UG/KG	BNA	470	U	340	U	410	U	350	U	460	U
BENZOIC ACID	UG/KG	BNA	2300	U	1700	U	2000	U	1700	U	2200	U
BENZYL ALCOHOL	UG/KG	BNA	470	U	340	U	410	U	350	U	460	U
BIS(2-CHLOROETHOXY)METHANE	UG/KG	BNA	470	U	340	U	410	U	350	U	460	U
BIS(2-CHLOROETHYL)ETHER	UG/KG	BNA	470	U	340	U	410	U	350	U	460	U
BIS(2-CHLOROISOPROPYL)ETHER	UG/KG	BNA	470	U	340	U	410	U	350	U	460	U
BIS(2-ETHYLHEXYL)PHTHALATE	UG/KG	BNA	470	U	340	U	410	U	350	U	460	U
BUTYLBENZYLPHTHALATE	UG/KG	BNA	470	U	340	U	410	U	350	U	460	U
CHRYSENE	UG/KG	BNA	470	U	340	U	410	U	350	U	460	U
DI-N-BUTYLPHTHALATE	UG/KG	BNA	470	U	340	U	410	U	350	U	460	U
DI-N-OCTYLPHTHALATE	UG/KG	BNA	470	U	340	U	410	U	350	U	460	U
DIBENZ(A,H)ANTHRACENE	UG/KG	BNA	470	U	340	U	410	U	350	U	460	U
DIBENZOFURAN	UG/KG	BNA	470	U	340	U	410	U	350	U	460	U
DIETHYLPHTHALATE	UG/KG	BNA	470	U	340	U	410	U	350	U	460	U
DIMETHYLPHTHALATE	UG/KG	BNA	470	U	340	U	410	U	350	U	460	U
FLUORANTHENE	UG/KG	BNA	470	U	340	U	410	U	350	U	460	U
FLUORENE	UG/KG	BNA	470	U	340	U	410	U	350	U	460	U

NAVSTA-SAN DIEGO
SITE 4 WATER

		SAMPLE NUMBER:	NS4-BH5-S02-15		NS4-BH6-S01-5		NS4-BH6-S02-10		NS4-BH6-S03-5-FD		NS4-BH6-S06-15	
		SAMPLING DATE:	01/29/91		01/28/91		01/28/91		01/28/91		01/28/91	
		BORING:	BH5		BH6		BH6		BH6		BH6	
		SITE:	NS4		NS4		NS4		NS4		NS4	
		DEPTH:	15		5		10		5-FD		15	
COMPOUND NAME	UNITS	TEST CODE	RESULT	QUALIFIER	RESULT	QUALIFIER	RESULT	QUALIFIER	RESULT	QUALIFIER	RESULT	QUALIFIER
HEXACHLOROBENZENE	UG/KG	BNA	470	U	340	U	410	U	350	U	460	U
HEXACHLOROBUTADIENE	UG/KG	BNA	470	U	340	U	410	U	350	U	460	U
HEXACHLOROCYCLOPENTADIENE	UG/KG	BNA	470	U	340	U	410	U	350	U	460	U
HEXACHLOROETHANE	UG/KG	BNA	470	U	340	U	410	U	350	U	460	U
INDENO(1,2,3-C,D)PYRENE	UG/KG	BNA	470	U	340	U	410	U	350	U	460	U
ISOPHORONE	UG/KG	BNA	470	U	340	U	410	U	350	U	460	U
N-NITROSO-DI-N-PROPYLAMINE	UG/KG	BNA	470	U	340	U	410	U	350	U	460	U
N-NITROSODIPHENYLAMINE (1)	UG/KG	BNA	470	U	340	U	410	U	350	U	460	U
NAPHTHALENE	UG/KG	BNA	470	U	340	U	410	U	350	U	460	U
NITROBENZENE	UG/KG	BNA	470	U	340	U	410	U	350	U	460	U
PENTACHLOROPHENOL	UG/KG	BNA	2300	U	1700	U	2000	U	1700	U	2200	U
PHENANTHRENE	UG/KG	BNA	470	U	340	U	410	U	350	U	460	U
PHENOL	UG/KG	BNA	470	U	340	U	410	U	350	U	460	U
PYRENE	UG/KG	BNA	470	U	340	U	410	U	350	U	460	U
1,2,4-TRICHLOROBENZENE	UG/L	BNA										
1,2-DICHLOROBENZENE	UG/L	BNA										
1,3-DICHLOROBENZENE	UG/L	BNA										
1,4-DICHLOROBENZENE	UG/L	BNA										
2,4,5-TRICHLOROPHENOL	UG/L	BNA										
2,4,6-TRIBROMOPHENOL	UG/L	BNA										
2,4,6-TRICHLOROPHENOL	UG/L	BNA										
2,4-DICHLOROPHENOL	UG/L	BNA										
2,4-DIMETHYLPHENOL	UG/L	BNA										
2,4-DINITROPHENOL	UG/L	BNA										
2,4-DINITROTOLUENE	UG/L	BNA										
2,6-DINITROTOLUENE	UG/L	BNA										
2-CHLORONAPHTHALENE	UG/L	BNA										
2-CHLOROPHENOL	UG/L	BNA										
2-FLUOROBIPHENYL	UG/L	BNA										
2-FLUOROPHENOL	UG/L	BNA										
2-METHYLNAPHTHALENE	UG/L	BNA										
2-METHYLPHENOL	UG/L	BNA										
2-NITROANILINE	UG/L	BNA										
2-NITROPHENOL	UG/L	BNA										
3,3'-DICHLOROBENZIDINE	UG/L	BNA										
3-NITROANILINE	UG/L	BNA										
4,6-DINITRO-2-METHYLPHENOL	UG/L	BNA										
4-BROMOPHENYL-PHENYLETHER	UG/L	BNA										
4-CHLORO-3-METHYLPHENOL	UG/L	BNA										
4-CHLOROANILINE	UG/L	BNA										
4-CHLOROPHENYL-PHENYLETHER	UG/L	BNA										
4-METHYLPHENOL	UG/L	BNA										
4-NITROANILINE	UG/L	BNA										
4-NITROPHENOL	UG/L	BNA										
ACENAPHTHENE	UG/L	BNA										
ACENAPHTHYLENE	UG/L	BNA										
ANTHRACENE	UG/L	BNA										
BENZO(A)ANTHRACENE	UG/L	BNA										
BENZO(A)PYRENE	UG/L	BNA										
BENZO(B)FLUORANTHENE	UG/L	BNA										
BENZO(G,H,I)PERYLENE	*UG/L*	*BNA*										

NAVSTA-SAN DIEGO
SITE 4 WATER

		SAMPLE NUMBER:	NS4-BH5-S02-15		NS4-BH6-S01-5		NS4-BH6-S02-10		NS4-BH6-S03-5-FD		NS4-BH6-S06-15	
		SAMPLING DATE:	01/29/91		01/28/91		01/28/91		01/28/91		01/28/91	
		BORING:	BH5		BH6		BH6		BH6		BH6	
		SITE:	NS4		NS4		NS4		NS4		NS4	
		DEPTH:	15		5		10		5-FD		15	
COMPOUND NAME	UNITS	TEST CODE	RESULT	QUALIFIER	RESULT	QUALIFIER	RESULT	QUALIFIER	RESULT	QUALIFIER	RESULT	QUALIFIER
BENZO(K)FLUORANTHENE	UG/L	BNA										
BENZOIC ACID	UG/L	BNA										
BENZYL ALCOHOL	UG/L	BNA										
BIS(2-CHLOROETHOXY)METHANE	UG/L	BNA										
BIS(2-CHLOROETHYL)ETHER	UG/L	BNA										
BIS(2-CHLOROISOPROPYL)ETHER	UG/L	BNA										
BIS(2-ETHYLHEXYL)PHTHALATE	UG/L	BNA										
BUTYLBENZYLPHTHALATE	UG/L	BNA										
CHRYSENE	UG/L	BNA										
DI-N-BUTYLPHTHALATE	UG/L	BNA										
DI-N-OCTYLPHTHALATE	UG/L	BNA										
DIBENZ(A,H)ANTHRACENE	UG/L	BNA										
DIBENZO(A,H)ANTHRACENE	UG/L	BNA										
DIBENZOFURAN	UG/L	BNA										
DIETHYLPHTHALATE	UG/L	BNA										
DIMETHYLPHTHALATE	UG/L	BNA										
FLUORANTHENE	UG/L	BNA										
FLUORENE	UG/L	BNA										
HEXACHLOROBENZENE	UG/L	BNA										
HEXACHLOROBUTADIENE	UG/L	BNA										
HEXACHLOROCYCLOPENTADIENE	UG/L	BNA										
HEXACHLOROETHANE	UG/L	BNA										
INDENO(1,2,3-C,D)PYRENE	UG/L	BNA										
ISOPHORONE	UG/L	BNA										
N-NITROSO-DI-N-PROPYLAMINE	UG/L	BNA										
N-NITROSODIPHENYLAMINE (1)	UG/L	BNA										
NAPHTHALENE	UG/L	BNA										
NITROBENZENE	UG/L	BNA										
NITROBENZENE-D5	UG/L	BNA										
PENTACHLOROPHENOL	UG/L	BNA										
PHENANTHRENE	UG/L	BNA										
PHENOL	UG/L	BNA										
PHENOL-D5	UG/L	BNA										
PYRENE	UG/L	BNA										
TERPHENYL-D14	UG/L	BNA										
ANTIMONY	MG/KG	CAC METALS	5.3	U	3.9	U	4.4	U	3.8	U	5.1	U
ARSENIC	MG/KG	CAC METALS	0.26	U	1.8	B	3.6		1.8	B	2.6	
BARIUM	MG/KG	CAC METALS	34.1	B	28.3	B	47.1		27.9	B	35.9	B
BERYLLIUM	MG/KG	CAC METALS	2.1		0.41	B	1.9		0.42	B	1.9	
CADMIUM	MG/KG	CAC METALS	1.1	U	0.82	U	0.93	U	0.80	U	1.1	U
CHROMIUM	MG/KG	CAC METALS	13.9		3.5		12.8		4.1		16.9	
COBALT	MG/KG	CAC METALS	4.8	B	1.5	B	5.5	B	1.4	B	5.3	B
COPPER	MG/KG	CAC METALS	7.7	U	1.5	U	20.5	U	24.3	U	79.4	U
LEAD	MG/KG	CAC METALS	2.1	U	1.5	U	7.1	U	2.4	U	3.3	U
MERCURY	MG/KG	CAC METALS	0.21	U	0.16	U	0.19	U	0.16	U	0.21	U
MOLYBDENUM	MG/KG	CAC METALS	2.0	U	1.4	U	2.6	B	1.4	U	3.6	B
NICKEL	MG/KG	CAC METALS	2.5	U	1.8	U	3.0	B	1.8	U	4.2	B
SELENIUM	MG/KG	CAC METALS	0.52	U	0.39	U	0.48	U	0.42	U	0.51	U
SILVER	MG/KG	CAC METALS	1.7	U	0.77	U	1.7	U	0.83	U	1.5	U
THALLIUM	MG/KG	CAC METALS	0.52	B	0.20	B	0.24	U	0.40	B	0.49	B
VANADIUM	*MG/KG*	*CAC METALS*	28.4		9.8	B	30.9		11.3		32.7	

NAVSTA-SAN DIEGO
SITE 4 WATER

		SAMPLE NUMBER:	NS4-BH5-S02-15		NS4-BH6-S01-5		NS4-BH6-S02-10		NS4-BH6-S03-5-FD		NS4-BH6-S06-15	
		SAMPLING DATE:	01/29/91		01/28/91		01/28/91		01/28/91		01/28/91	
		BORING:	BH5		BH6		BH6		BH6		BH6	
		SITE:	NS4		NS4		NS4		NS4		NS4	
		DEPTH:	15		5		10		5-FD		15	
COMPOUND NAME	UNITS	TEST CODE	RESULT	QUALIFIER	RESULT	QUALIFIER	RESULT	QUALIFIER	RESULT	QUALIFIER	RESULT	QUALIFIER
ZINC	MG/KG	CAC METALS	27.5	U	8.3	U	30.0	U	13.5	U	35.0	U
ANTIMONY	UG/KG	CAC METALS										
ARSENIC	UG/KG	CAC METALS										
BARIUM	UG/KG	CAC METALS										
BERYLLIUM	UG/KG	CAC METALS										
CADMIUM	UG/KG	CAC METALS										
CHROMIUM	UG/KG	CAC METALS										
COBALT	UG/KG	CAC METALS										
COPPER	UG/KG	CAC METALS										
LEAD	UG/KG	CAC METALS										
MERCURY	UG/KG	CAC METALS										
MOLYBDENUM	UG/KG	CAC METALS										
NICKEL	UG/KG	CAC METALS										
SELENIUM	UG/KG	CAC METALS										
SILVER	UG/KG	CAC METALS										
THALLIUM	UG/KG	CAC METALS										
VANADIUM	UG/KG	CAC METALS										
ZINC	UG/KG	CAC METALS										
ANTIMONY	UG/L	CAC METALS										
ARSENIC	UG/L	CAC METALS										
BARIUM	UG/L	CAC METALS										
BERYLLIUM	UG/L	CAC METALS										
CADMIUM	UG/L	CAC METALS										
CHROMIUM	UG/L	CAC METALS										
COBALT	UG/L	CAC METALS										
COPPER	UG/L	CAC METALS										
LEAD	UG/L	CAC METALS										
MERCURY	UG/L	CAC METALS										
MOLYBDENUM	UG/L	CAC METALS										
NICKEL	UG/L	CAC METALS										
SELENIUM	UG/L	CAC METALS										
SILVER	UG/L	CAC METALS										
THALLIUM	UG/L	CAC METALS										
VANADIUM	UG/L	CAC METALS										
ZINC	UG/L	CAC METALS										
CAC WET EXTRACTION	DATE	CAC WET EX										
COPPER	MG/L	CAC WET EX										
LEAD	MG/L	CAC WET EX										
TOTAL CYANIDE	MG/KG	CN	1	U	1	UJ	1	UJ	1	UJ	1	UJ
TOTAL CYANIDE	MG/L	CN										
4,4'-DDD	UG/KG	PEST / PCB	23	U	17	U	20	U	17	U	22	U
4,4'-DDE	UG/KG	PEST / PCB	23	U	17	U	20	U	17	U	22	U
4,4'-DDT	UG/KG	PEST / PCB	23	U	17	U	20	U	17	U	22	U
ALDRIN	UG/KG	PEST / PCB	11	U	8.3	U	10	U	8.6	U	11	U
ALPHA-BHC	UG/KG	PEST / PCB	11	U	8.3	U	10	U	8.6	U	11	U
ALPHA-CHLORDANE	UG/KG	PEST / PCB	110	U	83	U	100	U	86	U	110	U
BETA-BHC	UG/KG	PEST / PCB	11	U	8.3	U	10	U	8.6	U	11	U
DELTA-BHC	UG/KG	PEST / PCB	11	U	8.3	U	10	U	8.6	U	11	U
DIBUTYL CHLORENDATE	UG/KG	PEST / PCB	91		88		87		102		37	
DIELDRIN	UG/KG	PEST / PCB	23	U	17	U	20	U	17	U	22	U
ENDOSULFAN I	UG/KG	PEST / PCB	11	U	8.3	U	10	U	8.6	U	11	U

NAVSTA-SAN DIEGO
SITE 4 WATER

		SAMPLE NUMBER:	NS4-BH5-S02-15		NS4-BH6-S01-5		NS4-BH6-S02-10		NS4-BH6-S03-5-FD		NS4-BH6-S06-15	
		SAMPLING DATE:	01/29/91		01/28/91		01/28/91		01/28/91		01/28/91	
		BORING:	BH5		BH6		BH6		BH6		BH6	
		SITE:	NS4		NS4		NS4		NS4		NS4	
		DEPTH:	15		5		10		5-FD		15	
COMPOUND NAME	UNITS	TEST CODE	RESULT	QUALIFIER	RESULT	QUALIFIER	RESULT	QUALIFIER	RESULT	QUALIFIER	RESULT	QUALIFIER
ENDOSULFAN II	UG/KG	PEST / PCB	23	U	17	U	20	U	17	U	22	U
ENDOSULFAN SULFATE	UG/KG	PEST / PCB	23	U	17	U	20	U	17	U	22	U
ENDRIN	UG/KG	PEST / PCB	23	U	17	U	20	U	17	U	22	U
ENDRIN KETONE	UG/KG	PEST / PCB	23	U	17	U	20	U	17	U	22	U
GAMMA-BHC (LINDANE)	UG/KG	PEST / PCB	11	U	8.3	U	10	U	8.6	U	11	U
GAMMA-CHLORDANE	UG/KG	PEST / PCB	110	U	83	U	100	U	86	U	110	U
HEPTACHLOR	UG/KG	PEST / PCB	11	U	8.3	U	10	U	8.6	U	11	U
HEPTACHLOR EPOXIDE	UG/KG	PEST / PCB	11	U	8.3	U	10	U	8.6	U	11	U
METHOXYCHLOR	UG/KG	PEST / PCB	110	U	83	U	100	U	86	U	110	U
PCB-1016	UG/KG	PEST / PCB	110	U	83	U	100	U	86	U	110	U
PCB-1221	UG/KG	PEST / PCB	110	U	83	U	100	U	86	U	110	U
PCB-1232	UG/KG	PEST / PCB	110	U	83	U	100	U	86	U	110	U
PCB-1242	UG/KG	PEST / PCB	110	U	83	U	100	U	86	U	110	U
PCB-1248	UG/KG	PEST / PCB	110	U	83	U	100	U	86	U	110	U
PCB-1254	UG/KG	PEST / PCB	230	U	170	U	200	U	170	U	220	U
PCB-1260	UG/KG	PEST / PCB	230	U	170	U	200	U	170	U	220	U
TOXAPHENE	UG/KG	PEST / PCB	230	U	170	U	200	U	170	U	220	U
4,4'-DDD	UG/L	PEST / PCB										
4,4'-DDE	UG/L	PEST / PCB										
4,4'-DDT	UG/L	PEST / PCB										
ALDRIN	UG/L	PEST / PCB										
ALPHA-BHC	UG/L	PEST / PCB										
ALPHA-CHLORDANE	UG/L	PEST / PCB										
BETA-BHC	UG/L	PEST / PCB										
DELTA-BHC	UG/L	PEST / PCB										
DIBUTYL CHLORENDATE	UG/L	PEST / PCB										
DIELDRIN	UG/L	PEST / PCB										
ENDOSULFAN I	UG/L	PEST / PCB										
ENDOSULFAN II	UG/L	PEST / PCB										
ENDOSULFAN SULFATE	UG/L	PEST / PCB										
ENDRIN	UG/L	PEST / PCB										
ENDRIN KETONE	UG/L	PEST / PCB										
GAMMA-BHC (LINDANE)	UG/L	PEST / PCB										
GAMMA-CHLORDANE	UG/L	PEST / PCB										
HEPTACHLOR	UG/L	PEST / PCB										
HEPTACHLOR EPOXIDE	UG/L	PEST / PCB										
METHOXYCHLOR	UG/L	PEST / PCB										
PCB-1016	UG/L	PEST / PCB										
PCB-1221	UG/L	PEST / PCB										
PCB-1232	UG/L	PEST / PCB										
PCB-1242	UG/L	PEST / PCB										
PCB-1248	UG/L	PEST / PCB										
PCB-1254	UG/L	PEST / PCB										
PCB-1260	UG/L	PEST / PCB										
TOXAPHENE	UG/L	PEST / PCB										
DIESEL	MG/KG	TPHC										
JP4	MG/KG	TPHC										
JP5	MG/KG	TPHC										
STODDARD	MG/KG	TPHC	10	U	10	U	10	U	10	U	10	U
DIESEL	UG/KG	TPHC										
JP4	UG/KG	TPHC										

NAVSTA-SAN DIEGO
SITE 4 WATER

		SAMPLE NUMBER:	NS4-BH5-S02-15		NS4-BH6-S01-5		NS4-BH6-S02-10		NS4-BH6-S03-5-FD		NS4-BH6-S06-15	
		SAMPLING DATE:	01/29/91		01/28/91		01/28/91		01/28/91		01/28/91	
		BORING:	BH5		BH6		BH6		BH6		BH6	
		SITE:	NS4		NS4		NS4		NS4		NS4	
		DEPTH:	15		5		10		5-FD		15	
COMPOUND NAME	UNITS	TEST CODE	RESULT	QUALIFIER	RESULT	QUALIFIER	RESULT	QUALIFIER	RESULT	QUALIFIER	RESULT	QUALIFIER
JP5	UG/KG	TPHC										
STODDARD	UG/KG	TPHC										
BENZO(A)PYRENE	UG/L	TPHC										
STODDARD	UG/L	TPHC										
1,1,1-TRICHLOROETHANE	UG/KG	VOA	7	U	5	U	6	U	5	U	12	U
1,1,2,2-TETRACHLOROETHANE	UG/KG	VOA	7	U	5	U	6	U	5	U	12	U
1,1,2-TRICHLOROETHANE	UG/KG	VOA	7	U	5	U	6	U	5	U	12	U
1,1-DICHLOROETHANE	UG/KG	VOA	7	U	5	U	6	U	5	U	12	U
1,1-DICHLOROETHENE	UG/KG	VOA	7	U	5	U	6	U	5	U	12	U
1,2-DICHLOROETHANE	UG/KG	VOA	7	U	5	U	6	U	5	U	12	U
1,2-DICHLOROETHENE (TOTAL)	UG/KG	VOA	7	U	5	U	6	U	5	U	12	U
1,2-DICHLOROPROPANE	UG/KG	VOA	7	U	5	U	6	U	5	U	12	U
2-BUTANONE	UG/KG	VOA	14	U	10	U	12	U	11	U	23	U
2-HEXANONE	UG/KG	VOA	14	U	10	U	12	U	11	U	23	U
4-METHYL-2-PENTANONE	UG/KG	VOA	14	U	10	U	12	U	11	U	23	U
ACETONE	UG/KG	VOA	14	U	10	U	26	U	11	U	23	U
BENZENE	UG/KG	VOA	7	U	5	U	6	U	5	U	12	U
BROMODICHLOROMETHANE	UG/KG	VOA	7	U	5	U	6	U	5	U	12	U
BROMOFORM	UG/KG	VOA	7	U	5	U	6	U	5	U	12	U
BROMOMETHANE	UG/KG	VOA	14	U	10	U	12	U	11	U	23	U
CARBON DISULFIDE	UG/KG	VOA	60		5	U	6	U	5	U	370	
CARBON TETRACHLORIDE	UG/KG	VOA	7	U	5	U	6	U	5	U	12	U
CHLOROBENZENE	UG/KG	VOA	7	U	5	U	6	U	5	U	12	U
CHLOROETHANE	UG/KG	VOA	14	U	10	U	12	U	11	U	23	U
CHLOROFORM	UG/KG	VOA	7	U	5	U	6	U	5	U	12	U
CHLOROMETHANE	UG/KG	VOA	14	U	10	U	12	U	11	U	23	U
CIS-1,3-DICHLOROPROPENE	UG/KG	VOA	7	U	5	U	6	U	5	U	12	U
DIBROMOCHLOROMETHANE	UG/KG	VOA	7	U	5	U	6	U	5	U	12	U
ETHYLBENZENE	UG/KG	VOA	7	U	5	U	6	U	5	U	12	U
METHYLENE CHLORIDE	UG/KG	VOA	7	U	9	U	28	U	13	U	28	U
STYRENE	UG/KG	VOA	7	U	5	U	6	U	5	U	12	U
TETRACHLOROETHENE	UG/KG	VOA	7	U	5	U	6	U	5	U	12	U
TOLUENE	UG/KG	VOA	7	U	5	U	6	U	5	U	12	U
TRANS-1,3-DICHLOROPROPENE	UG/KG	VOA	7	U	5	U	6	U	5	U	12	U
TRICHLOROETHENE	UG/KG	VOA	7	U	5	U	6	U	5	U	12	U
VINYL ACETATE	UG/KG	VOA	14	U	10	U	12	U	11	U	23	U
VINYL CHLORIDE	UG/KG	VOA	14	U	10	U	12	U	11	U	23	U
XYLENES (TOTAL)	UG/KG	VOA	7	U	5	U	6	U	5	U	12	U
1,1,1-TRICHLOROETHANE	UG/L	VOA										
1,1,2,2-TETRACHLOROETHANE	UG/L	VOA										
1,1,2-TRICHLOROETHANE	UG/L	VOA										
1,1-DICHLOROETHANE	UG/L	VOA										
1,1-DICHLOROETHENE	UG/L	VOA										
1,2-DICHLOROETHANE	UG/L	VOA										
1,2-DICHLOROETHANE-D4	UG/L	VOA										
1,2-DICHLOROETHENE (TOTAL)	UG/L	VOA										
1,2-DICHLOROPROPANE	UG/L	VOA										
2-BUTANONE	UG/L	VOA										
2-HEXANONE	UG/L	VOA										
4-METHYL-2-PENTANONE	UG/L	VOA										
ACETONE	UG/L	VOA										

NAVSTA-SAN DIEGO
SITE 4 WATER

		SAMPLE NUMBER:	NS4-BH5-S02-15		NS4-BH6-S01-5		NS4-BH6-S02-10		NS4-BH6-S03-5-FD		NS4-BH6-S06-15	
		SAMPLING DATE:	01/29/91		01/28/91		01/28/91		01/28/91		01/28/91	
		BORING:	BH5		BH6		BH6		BH6		BH6	
		SITE:	NS4		NS4		NS4		NS4		NS4	
		DEPTH:	15		5		10		5-FD		15	
COMPOUND NAME	UNITS	TEST CODE	RESULT	QUALIFIER	RESULT	QUALIFIER	RESULT	QUALIFIER	RESULT	QUALIFIER	RESULT	QUALIFIER
BENZENE	UG/L	VOA										
BROMODICHLOROMETHANE	UG/L	VOA										
BROMOFLUOROBENZENE	UG/L	VOA										
BROMOFORM	UG/L	VOA										
BROMOMETHANE	UG/L	VOA										
CARBON DISULFIDE	UG/L	VOA										
CARBON TETRACHLORIDE	UG/L	VOA										
CHLOROBENZENE	UG/L	VOA										
CHLOROETHANE	UG/L	VOA										
CHLOROFORM	UG/L	VOA										
CHLOROMETHANE	UG/L	VOA										
CIS-1,3-DICHLOROPROPENE	UG/L	VOA										
DIBROMOCHLOROMETHANE	UG/L	VOA										
ETHYLBENZENE	UG/L	VOA										
METHYLENE CHLORIDE	UG/L	VOA										
STYRENE	UG/L	VOA										
TETRACHLOROETHENE	UG/L	VOA										
TOLUENE	UG/L	VOA										
TOLUENE-D8	UG/L	VOA										
TRANS-1,3-DICHLOROPROPENE	UG/L	VOA										
TRICHLOROETHENE	UG/L	VOA										
VINYL ACETATE	UG/L	VOA										
VINYL CHLORIDE	UG/L	VOA										
XYLENES (TOTAL)	UG/L	VOA										

NAVSTA-SAN DIEGO
SITE 4 WATER

		SAMPLE NUMBER:	NS4-BH7-S01-10		NS4-BH7-S02-15		NS4-BH8-S01-5		NS4-BH8-S02-10		NS4-BH8-S03-15	
		SAMPLING DATE:	01/28/91		01/28/91		01/28/91		01/28/91		01/28/91	
		BORING:	BH7		BH7		BH8		BH8		BH8	
		SITE:	NS4		NS4		NS4		NS4		NS4	
		DEPTH:	10		15		5		10		15	
COMPOUND NAME	UNITS	TEST CODE	RESULT	QUALIFIER	RESULT	QUALIFIER	RESULT	QUALIFIER	RESULT	QUALIFIER	RESULT	QUALIFIER
1,2,4-TRICHLOROBENZENE	UG/KG	BNA	520	U	470	U	390	U	620	U	490	U
1,2-DICHLOROBENZENE	UG/KG	BNA	520	U	470	U	390	U	620	U	490	U
1,3-DICHLOROBENZENE	UG/KG	BNA	520	U	470	U	390	U	620	U	490	U
1,4-DICHLOROBENZENE	UG/KG	BNA	520	U	470	U	390	U	620	U	490	U
2,4,5-TRICHLOROPHENOL	UG/KG	BNA	2500	U	2300	U	1900	U	3000	U	2400	U
2,4,6-TRICHLOROPHENOL	UG/KG	BNA	520	U	470	U	390	U	620	U	490	U
2,4-DICHLOROPHENOL	UG/KG	BNA	520	U	470	U	390	U	620	U	490	U
2,4-DIMETHYLPHENOL	UG/KG	BNA	520	U	470	U	390	U	620	U	490	U
2,4-DINITROPHENOL	UG/KG	BNA	2500	U	2300	U	1900	U	3000	U	2400	U
2,4-DINITROTOLUENE	UG/KG	BNA	520	U	470	U	390	U	620	U	490	U
2,6-DINITROTOLUENE	UG/KG	BNA	520	U	470	U	390	U	620	U	490	U
2-CHLORONAPHTHALENE	UG/KG	BNA	520	U	470	U	390	U	620	U	490	U
2-CHLOROPHENOL	UG/KG	BNA	520	U	470	U	390	U	620	U	490	U
2-METHYLNAPHTHALENE	UG/KG	BNA	520	U	470	U	390	U	620	U	490	U
2-METHYLPHENOL	UG/KG	BNA	520	U	470	U	390	U	620	U	490	U
2-NITROANILINE	UG/KG	BNA	2500	U	2300	U	1900	U	3000	U	2400	U
2-NITROPHENOL	UG/KG	BNA	520	U	470	U	390	U	620	U	490	U
3,3'-DICHLOROBENZIDINE	UG/KG	BNA	1000	U	940	U	780	U	1200	U	970	U
3-NITROANILINE	UG/KG	BNA	2500	U	2300	U	1900	U	3000	U	2400	U
4,6-DINITRO-2-METHYLPHENOL	UG/KG	BNA	2500	U	2300	U	1900	U	3000	U	2400	U
4-BROMOPHENYL-PHENYLETHER	UG/KG	BNA	520	U	470	U	390	U	620	U	490	U
4-CHLORO-3-METHYLPHENOL	UG/KG	BNA	520	U	470	U	390	U	620	U	490	U
4-CHLOROANILINE	UG/KG	BNA	520	U	470	U	390	U	620	U	490	U
4-CHLOROPHENYL-PHENYLETHER	UG/KG	BNA	520	U	470	U	390	U	620	U	490	U
4-METHYLPHENOL	UG/KG	BNA	520	U	470	U	390	U	620	U	490	U
4-NITROANILINE	UG/KG	BNA	2500	U	2300	U	1900	U	3000	U	2400	U
4-NITROPHENOL	UG/KG	BNA	2500	U	2300	U	1900	U	3000	U	2400	U
ACENAPHTHENE	UG/KG	BNA	520	U	470	U	390	U	620	U	490	U
ACENAPHTHYLENE	UG/KG	BNA	520	U	470	U	390	U	620	U	490	U
ANTHRACENE	UG/KG	BNA	520	U	470	U	390	U	620	U	490	U
BENZO(A)ANTHRACENE	UG/KG	BNA	520	U	470	U	390	U	620	U	490	U
BENZO(A)PYRENE	UG/KG	BNA	520	U	470	U	390	U	620	U	490	U
BENZO(B)FLUORANTHENE	UG/KG	BNA	520	U	470	U	390	U	620	U	490	U
BENZO(G,H,I)PERYLENE	UG/KG	BNA	520	U	470	U	390	U	620	U	490	U
BENZO(K)FLUORANTHENE	UG/KG	BNA	520	U	470	U	390	U	620	U	490	U
BENZOIC ACID	UG/KG	BNA	2500	U	2300	U	1900	U	3000	U	2400	U
BENZYL ALCOHOL	UG/KG	BNA	520	U	470	U	390	U	620	U	490	U
BIS(2-CHLOROETHOXY)METHANE	UG/KG	BNA	520	U	470	U	390	U	620	U	490	U
BIS(2-CHLOROETHYL)ETHER	UG/KG	BNA	520	U	470	U	390	U	620	U	490	U
BIS(2-CHLOROISOPROPYL)ETHER	UG/KG	BNA	520	U	470	U	390	U	620	U	490	U
BIS(2-ETHYLHEXYL)PHTHALATE	UG/KG	BNA	520	U	470	U	390	U	620	U	490	U
BUTYLBENZYLPHTHALATE	UG/KG	BNA	520	U	470	U	390	U	620	U	490	U
CHRYSENE	UG/KG	BNA	520	U	470	U	390	U	620	U	490	U
DI-N-BUTYLPHTHALATE	UG/KG	BNA	520	U	470	U	390	U	620	U	490	U
DI-N-OCTYLPHTHALATE	UG/KG	BNA	520	U	470	U	390	U	620	U	490	U
DIBENZ(A,H)ANTHRACENE	UG/KG	BNA	520	U	470	U	390	U	620	U	490	U
DIBENZOFURAN	UG/KG	BNA	520	U	470	U	390	U	620	U	490	U
DIETHYLPHTHALATE	UG/KG	BNA	520	U	470	U	390	U	620	U	490	U
DIMETHYLPHTHALATE	UG/KG	BNA	520	U	470	U	390	U	620	U	490	U
FLUORANTHENE	UG/KG	BNA	120	J	470	U	390	U	620	U	490	U
FLUORENE	UG/KG	BNA	520	U	470	U	390	U	620	U	490	U

NAVSTA-SAN DIEGO
SITE 4 WATER

		SAMPLE NUMBER:	NS4-BH7-S01-10		NS4-BH7-S02-15		NS4-BH8-S01-5		NS4-BH8-S02-10		NS4-BH8-S03-15	
		SAMPLING DATE:	01/28/91		01/28/91		01/28/91		01/28/91		01/28/91	
		BORING:	BH7		BH7		BH8		BH8		BH8	
		SITE:	NS4		NS4		NS4		NS4		NS4	
		DEPTH:	10		15		5		10		15	
COMPOUND NAME	UNITS	TEST CODE	RESULT	QUALIFIER	RESULT	QUALIFIER	RESULT	QUALIFIER	RESULT	QUALIFIER	RESULT	QUALIFIER
HEXACHLOROBENZENE	UG/KG	BNA	520	U	470	U	390	U	620	U	490	U
HEXACHLOROBUTADIENE	UG/KG	BNA	520	U	470	U	390	U	620	U	490	U
HEXACHLOROCYCLOPENTADIENE	UG/KG	BNA	520	U	470	U	390	U	620	U	490	U
HEXACHLOROETHANE	UG/KG	BNA	520	U	470	U	390	U	620	U	490	U
INDENO(1,2,3-C,D)PYRENE	UG/KG	BNA	520	U	470	U	390	U	620	U	490	U
ISOPHORONE	UG/KG	BNA	520	U	470	U	390	U	620	U	490	U
N-NITROSO-DI-N-PROPYLAMINE	UG/KG	BNA	520	U	470	U	390	U	620	U	490	U
N-NITROSODIPHENYLAMINE (1)	UG/KG	BNA	520	U	470	U	390	U	620	U	490	U
NAPHTHALENE	UG/KG	BNA	520	U	470	U	390	U	620	U	490	U
NITROBENZENE	UG/KG	BNA	520	U	470	U	390	U	620	U	490	U
PENTACHLOROPHENOL	UG/KG	BNA	2500	U	2300	U	1900	U	3000	U	2400	U
PHENANTHRENE	UG/KG	BNA	520	U	470	U	390	U	620	U	490	U
PHENOL	UG/KG	BNA	520	U	470	U	390	U	620	U	490	U
PYRENE	UG/KG	BNA	100	J	470	U	390	U	620	U	490	U
1,2,4-TRICHLOROBENZENE	UG/L	BNA										
1,2-DICHLOROBENZENE	UG/L	BNA										
1,3-DICHLOROBENZENE	UG/L	BNA										
1,4-DICHLOROBENZENE	UG/L	BNA										
2,4,5-TRICHLOROPHENOL	UG/L	BNA										
2,4,6-TRIBROMOPHENOL	UG/L	BNA										
2,4,6-TRICHLOROPHENOL	UG/L	BNA										
2,4-DICHLOROPHENOL	UG/L	BNA										
2,4-DIMETHYLPHENOL	UG/L	BNA										
2,4-DINITROPHENOL	UG/L	BNA										
2,4-DINITROTOLUENE	UG/L	BNA										
2,6-DINITROTOLUENE	UG/L	BNA										
2-CHLORONAPHTHALENE	UG/L	BNA										
2-CHLOROPHENOL	UG/L	BNA										
2-FLUOROBIPHENYL	UG/L	BNA										
2-FLUOROPHENOL	UG/L	BNA										
2-METHYLNAPHTHALENE	UG/L	BNA										
2-METHYLPHENOL	UG/L	BNA										
2-NITROANILINE	UG/L	BNA										
2-NITROPHENOL	UG/L	BNA										
3,3'-DICHLOROBENZIDINE	UG/L	BNA										
3-NITROANILINE	UG/L	BNA										
4,6-DINITRO-2-METHYLPHENOL	UG/L	BNA										
4-BROMOPHENYL-PHENYLETHER	UG/L	BNA										
4-CHLORO-3-METHYLPHENOL	UG/L	BNA										
4-CHLOROANILINE	UG/L	BNA										
4-CHLOROPHENYL-PHENYLETHER	UG/L	BNA										
4-METHYLPHENOL	UG/L	BNA										
4-NITROANILINE	UG/L	BNA										
4-NITROPHENOL	UG/L	BNA										
ACENAPHTHENE	UG/L	BNA										
ACENAPHTHYLENE	UG/L	BNA										
ANTHRACENE	UG/L	BNA										
BENZO(A)ANTHRACENE	UG/L	BNA										
BENZO(A)PYRENE	UG/L	BNA										
BENZO(B)FLUORANTHENE	UG/L	BNA										
BENZO(G,H,I)PERYLENE	UG/L	BNA										

NAVSTA-SAN DIEGO
SITE 4 WATER

		SAMPLE NUMBER:	NS4-BH7-S01-10		NS4-BH7-S02-15		NS4-BH8-S01-5		NS4-BH8-S02-10		NS4-BH8-S03-15	
		SAMPLING DATE:	01/28/91		01/28/91		01/28/91		01/28/91		01/28/91	
		BORING:	BH7		BH7		BH8		BH8		BH8	
		SITE:	NS4		NS4		NS4		NS4		NS4	
		DEPTH:	10		15		5		10		15	
COMPOUND NAME	UNITS	TEST CODE	RESULT	QUALIFIER	RESULT	QUALIFIER	RESULT	QUALIFIER	RESULT	QUALIFIER	RESULT	QUALIFIER
BENZO(K)FLUORANTHENE	UG/L	BNA										
BENZOIC ACID	UG/L	BNA										
BENZYL ALCOHOL	UG/L	BNA										
BIS(2-CHLOROETHOXY)METHANE	UG/L	BNA										
BIS(2-CHLOROETHYL)ETHER	UG/L	BNA										
BIS(2-CHLOROISOPROPYL)ETHER	UG/L	BNA										
BIS(2-ETHYLHEXYL)PHTHALATE	UG/L	BNA										
BUTYLBENZYLPHTHALATE	UG/L	BNA										
CHRYSENE	UG/L	BNA										
DI-N-BUTYLPHTHALATE	UG/L	BNA										
DI-N-OCTYLPHTHALATE	UG/L	BNA										
DIBENZ(A,H)ANTHRACENE	UG/L	BNA										
DIBENZO(A,H)ANTHRACENE	UG/L	BNA										
DIBENZOFURAN	UG/L	BNA										
DIETHYLPHTHALATE	UG/L	BNA										
DIMETHYLPHTHALATE	UG/L	BNA										
FLUORANTHENE	UG/L	BNA										
FLUORENE	UG/L	BNA										
HEXACHLOROBENZENE	UG/L	BNA										
HEXACHLOROBUTADIENE	UG/L	BNA										
HEXACHLOROCYCLOPENTADIENE	UG/L	BNA										
HEXACHLOROETHANE	UG/L	BNA										
INDENO(1,2,3-C,D)PYRENE	UG/L	BNA										
ISOPHORONE	UG/L	BNA										
N-NITROSO-DI-N-PROPYLAMINE	UG/L	BNA										
N-NITROSODIPHENYLAMINE (1)	UG/L	BNA										
NAPHTHALENE	UG/L	BNA										
NITROBENZENE	UG/L	BNA										
NITROBENZENE-D5	UG/L	BNA										
PENTACHLOROPHENOL	UG/L	BNA										
PHENANTHRENE	UG/L	BNA										
PHENOL	UG/L	BNA										
PHENOL-D5	UG/L	BNA										
PYRENE	UG/L	BNA										
TERPHENYL-D14	UG/L	BNA										
ANTIMONY	MG/KG	CAC METALS	5.8	U	5.3	U	4.3	U	6.9	U	5.2	U
ARSENIC	MG/KG	CAC METALS	0.30	U	2.0	B	2.0	B	1.2	B	4.5	
BARIUM	MG/KG	CAC METALS	71.9		137		50.1		87.7		45.8	B
BERYLLIUM	MG/KG	CAC METALS	4.0		6.3		1.7		5.6		3.1	
CADMIUM	MG/KG	CAC METALS	1.2	U	1.1	U	0.91	U	1.4	U	1.1	U
CHROMIUM	MG/KG	CAC METALS	24.7		10.2		10.7		37.1		20.6	
COBALT	MG/KG	CAC METALS	9.6	B	4.8	B	4.2	B	14.0	B	7.6	B
COPPER	MG/KG	CAC METALS	23.6	U	190		4.8	U	187		56.2	U
LEAD	MG/KG	CAC METALS	7.4	U	2.3	U	6.0	U	4.0	U	4.9	U
MERCURY	MG/KG	CAC METALS	0.75		0.21	U	0.18	U	0.28	U	0.22	U
MOLYBDENUM	MG/KG	CAC METALS	2.7	B	5.6	B	1.6	U	5.9	B	2.4	B
NICKEL	MG/KG	CAC METALS	7.0	B	2.5	U	3.4	B	10.7	B	4.6	B
SELENIUM	MG/KG	CAC METALS	0.60	U	0.54	B	0.46	U	0.71	U	0.55	U
SILVER	MG/KG	CAC METALS	2.1	U	1.4	U	0.96	U	2.2	U	2.5	U
THALLIUM	MG/KG	CAC METALS	0.60	U	0.54	B	0.46	U	0.71	U	0.55	B
VANADIUM	MG/KG	CAC METALS	59.5		20.9		29.4		86.2		46.3	

NAVSTA-SAN DIEGO
SITE 4 WATER

		SAMPLE NUMBER:	NS4-BH7-S01-10		NS4-BH7-S02-15		NS4-BH8-S01-5		NS4-BH8-S02-10		NS4-BH8-S03-15	
		SAMPLING DATE:	01/28/91		01/28/91		01/28/91		01/28/91		01/28/91	
		BORING:	BH7		BH7		BH8		BH8		BH8	
		SITE:	NS4		NS4		NS4		NS4		NS4	
		DEPTH:	10		15		5		10		15	
COMPOUND NAME	UNITS	TEST CODE	RESULT	QUALIFIER	RESULT	QUALIFIER	RESULT	QUALIFIER	RESULT	QUALIFIER	RESULT	QUALIFIER
ZINC	MG/KG	CAC METALS	66.8	U	145	U	25.9	U	83.7	U	39.7	U
ANTIMONY	UG/KG	CAC METALS										
ARSENIC	UG/KG	CAC METALS										
BARIUM	UG/KG	CAC METALS										
BERYLLIUM	UG/KG	CAC METALS										
CADMIUM	UG/KG	CAC METALS										
CHROMIUM	UG/KG	CAC METALS										
COBALT	UG/KG	CAC METALS										
COPPER	UG/KG	CAC METALS										
LEAD	UG/KG	CAC METALS										
MERCURY	UG/KG	CAC METALS										
MOLYBDENUM	UG/KG	CAC METALS										
NICKEL	UG/KG	CAC METALS										
SELENIUM	UG/KG	CAC METALS										
SILVER	UG/KG	CAC METALS										
THALLIUM	UG/KG	CAC METALS										
VANADIUM	UG/KG	CAC METALS										
ZINC	UG/KG	CAC METALS										
ANTIMONY	UG/L	CAC METALS										
ARSENIC	UG/L	CAC METALS										
BARIUM	UG/L	CAC METALS										
BERYLLIUM	UG/L	CAC METALS										
CADMIUM	UG/L	CAC METALS										
CHROMIUM	UG/L	CAC METALS										
COBALT	UG/L	CAC METALS										
COPPER	UG/L	CAC METALS										
LEAD	UG/L	CAC METALS										
MERCURY	UG/L	CAC METALS										
MOLYBDENUM	UG/L	CAC METALS										
NICKEL	UG/L	CAC METALS										
SELENIUM	UG/L	CAC METALS										
SILVER	UG/L	CAC METALS										
THALLIUM	UG/L	CAC METALS										
VANADIUM	UG/L	CAC METALS										
ZINC	UG/L	CAC METALS										
CAC WET EXTRACTION	DATE	CAC WET EX										
COPPER	MG/L	CAC WET EX										
LEAD	MG/L	CAC WET EX										
TOTAL CYANIDE	MG/KG	CN	1	UJ	1	UJ	1	U	1	U	1	U
TOTAL CYANIDE	MG/L	CN										
4,4'-DDD	UG/KG	PEST / PCB	25	U	23	U	19	U	30	U	24	U
4,4'-DDE	UG/KG	PEST / PCB	25	U	23	U	19	U	30	U	24	U
4,4'-DDT	UG/KG	PEST / PCB	25	U	23	U	19	U	30	U	24	U
ALDRIN	UG/KG	PEST / PCB	13	U	11	U	9.4	U	15	U	12	U
ALPHA-BHC	UG/KG	PEST / PCB	13	U	11	U	9.4	U	15	U	12	U
ALPHA-CHLORDANE	UG/KG	PEST / PCB	130	U	110	U	94	U	150	U	120	U
BETA-BHC	UG/KG	PEST / PCB	13	U	11	U	9.4	U	15	U	12	U
DELTA-BHC	UG/KG	PEST / PCB	13	U	11	U	9.4	U	15	U	12	U
DIBUTYL CHLORENDATE	UG/KG	PEST / PCB	44		39		95		59		49	
DIELDRIN	UG/KG	PEST / PCB	25	U	23	U	19	U	30	U	24	U
ENDOSULFAN I	UG/KG	PEST / PCB	13	U	11	U	9.4	U	15	U	12	U

NAVSTA-SAN DIEGO
SITE 4 WATER

		SAMPLE NUMBER:	NS4-BH7-S01-10		NS4-BH7-S02-15		NS4-BH8-S01-5		NS4-BH8-S02-10		NS4-BH8-S03-15	
		SAMPLING DATE:	01/28/91		01/28/91		01/28/91		01/28/91		01/28/91	
		BORING:	BH7		BH7		BH8		BH8		BH8	
		SITE:	NS4		NS4		NS4		NS4		NS4	
		DEPTH:	10		15		5		10		15	
COMPOUND NAME	UNITS	TEST CODE	RESULT	QUALIFIER	RESULT	QUALIFIER	RESULT	QUALIFIER	RESULT	QUALIFIER	RESULT	QUALIFIER
ENDOSULFAN II	UG/KG	PEST / PCB	25	U	23	U	19	U	30	U	24	U
ENDOSULFAN SULFATE	UG/KG	PEST / PCB	25	U	23	U	19	U	30	U	24	U
ENDRIN	UG/KG	PEST / PCB	25	U	23	U	19	U	30	U	24	U
ENDRIN KETONE	UG/KG	PEST / PCB	25	U	23	U	19	U	30	U	24	U
GAMMA-BHC (LINDANE)	UG/KG	PEST / PCB	13	U	11	U	9.4	U	15	U	12	U
GAMMA-CHLORDANE	UG/KG	PEST / PCB	130	U	110	U	94	U	150	U	120	U
HEPTACHLOR	UG/KG	PEST / PCB	13	U	11	U	9.4	U	15	U	12	U
HEPTACHLOR EPOXIDE	UG/KG	PEST / PCB	13	U	11	U	9.4	U	15	U	12	U
METHOXYCHLOR	UG/KG	PEST / PCB	130	U	110	U	94	U	150	U	120	U
PCB-1016	UG/KG	PEST / PCB	130	U	110	U	94	U	150	U	120	U
PCB-1221	UG/KG	PEST / PCB	130	U	110	U	94	U	150	U	120	U
PCB-1232	UG/KG	PEST / PCB	130	U	110	U	94	U	150	U	120	U
PCB-1242	UG/KG	PEST / PCB	130	U	110	U	94	U	150	U	120	U
PCB-1248	UG/KG	PEST / PCB	130	U	110	U	94	U	150	U	120	U
PCB-1254	UG/KG	PEST / PCB	250	U	230	U	190	U	300	U	240	U
PCB-1260	UG/KG	PEST / PCB	250	U	230	U	190	U	300	U	240	U
TOXAPHENE	UG/KG	PEST / PCB	250	U	230	U	190	U	300	U	240	U
4,4'-DDD	UG/L	PEST / PCB										
4,4'-DDE	UG/L	PEST / PCB										
4,4'-DDT	UG/L	PEST / PCB										
ALDRIN	UG/L	PEST / PCB										
ALPHA-BHC	UG/L	PEST / PCB										
ALPHA-CHLORDANE	UG/L	PEST / PCB										
BETA-BHC	UG/L	PEST / PCB										
DELTA-BHC	UG/L	PEST / PCB										
DIBUTYL CHLORENDATE	UG/L	PEST / PCB										
DIELDRIN	UG/L	PEST / PCB										
ENDOSULFAN I	UG/L	PEST / PCB										
ENDOSULFAN II	UG/L	PEST / PCB										
ENDOSULFAN SULFATE	UG/L	PEST / PCB										
ENDRIN	UG/L	PEST / PCB										
ENDRIN KETONE	UG/L	PEST / PCB										
GAMMA-BHC (LINDANE)	UG/L	PEST / PCB										
GAMMA-CHLORDANE	UG/L	PEST / PCB										
HEPTACHLOR	UG/L	PEST / PCB										
HEPTACHLOR EPOXIDE	UG/L	PEST / PCB										
METHOXYCHLOR	UG/L	PEST / PCB										
PCB-1016	UG/L	PEST / PCB										
PCB-1221	UG/L	PEST / PCB										
PCB-1232	UG/L	PEST / PCB										
PCB-1242	UG/L	PEST / PCB										
PCB-1248	UG/L	PEST / PCB										
PCB-1254	UG/L	PEST / PCB										
PCB-1260	UG/L	PEST / PCB										
TOXAPHENE	UG/L	PEST / PCB										
DIESEL	MG/KG	TPHC										
JP4	MG/KG	TPHC										
JP5	MG/KG	TPHC										
STODDARD	MG/KG	TPHC	10	U	10	U	10	U	10	U	10	U
DIESEL	UG/KG	TPHC										
JP4	UG/KG	TPHC										

NAVSTA-SAN DIEGO
SITE 4 WATER

		SAMPLE NUMBER:	NS4-BH7-S01-10		NS4-BH7-S02-15		NS4-BH8-S01-5		NS4-BH8-S02-10		NS4-BH8-S03-15	
		SAMPLING DATE:	01/28/91		01/28/91		01/28/91		01/28/91		01/28/91	
		BORING:	BH7		BH7		BH8		BH8		BH8	
		SITE:	NS4		NS4		NS4		NS4		NS4	
		DEPTH:	10		15		5		10		15	
COMPOUND NAME	UNITS	TEST CODE	RESULT	QUALIFIER	RESULT	QUALIFIER	RESULT	QUALIFIER	RESULT	QUALIFIER	RESULT	QUALIFIER
JP5	UG/KG	TPHC										
STODDARD	UG/KG	TPHC										
BENZO(A)PYRENE	UG/L	TPHC										
STODDARD	UG/L	TPHC										
1,1,1-TRICHLOROETHANE	UG/KG	VOA	8	U	7	U	6	U	9	U	7	U
1,1,2,2-TETRACHLOROETHANE	UG/KG	VOA	8	U	7	U	6	U	9	U	7	U
1,1,2-TRICHLOROETHANE	UG/KG	VOA	8	U	7	U	6	U	9	U	7	U
1,1-DICHLOROETHANE	UG/KG	VOA	8	U	7	U	6	U	9	U	7	U
1,1-DICHLOROETHENE	UG/KG	VOA	8	U	7	U	6	U	9	U	7	U
1,2-DICHLOROETHANE	UG/KG	VOA	8	U	7	U	6	U	9	U	7	U
1,2-DICHLOROETHENE (TOTAL)	UG/KG	VOA	8	U	7	U	6	U	9	U	7	U
1,2-DICHLOROPROPANE	UG/KG	VOA	8	U	7	U	6	U	9	U	7	U
2-BUTANONE	UG/KG	VOA	16	U	14	U	12	U	10	J	15	U
2-HEXANONE	UG/KG	VOA	16	U	14	U	12	U	19	U	15	U
4-METHYL-2-PENTANONE	UG/KG	VOA	16	U	14	U	12	U	19	U	15	U
ACETONE	UG/KG	VOA	47	U	41	U	18	U	47	U	15	U
BENZENE	UG/KG	VOA	8	U	7	U	6	U	9	U	7	U
BROMODICHLOROMETHANE	UG/KG	VOA	8	U	7	U	6	U	9	U	7	U
BROMOFORM	UG/KG	VOA	8	U	7	U	6	U	9	U	7	U
BROMOMETHANE	UG/KG	VOA	16	U	14	U	12	U	19	U	15	U
CARBON DISULFIDE	UG/KG	VOA	24		17		6	U	57		45	
CARBON TETRACHLORIDE	UG/KG	VOA	8	U	7	U	6	U	9	U	7	U
CHLOROBENZENE	UG/KG	VOA	8	U	7	U	6	U	9	U	7	U
CHLOROETHANE	UG/KG	VOA	16	U	14	U	12	U	19	U	15	U
CHLOROFORM	UG/KG	VOA	8	U	7	U	6	U	9	U	7	U
CHLOROMETHANE	UG/KG	VOA	16	U	14	U	12	U	19	U	15	U
CIS-1,3-DICHLOROPROPENE	UG/KG	VOA	8	U	7	U	6	U	9	U	7	U
DIBROMOCHLOROMETHANE	UG/KG	VOA	8	U	7	U	6	U	9	U	7	U
ETHYLBENZENE	UG/KG	VOA	8	U	7	U	6	U	9	U	7	U
METHYLENE CHLORIDE	UG/KG	VOA	50	U	40	U	10	U	10	U	11	U
STYRENE	UG/KG	VOA	8	U	7	U	6	U	9	U	7	U
TETRACHLOROETHENE	UG/KG	VOA	8	U	7	U	6	U	9	U	7	U
TOLUENE	UG/KG	VOA	8	U	7	U	6	U	9	U	7	U
TRANS-1,3-DICHLOROPROPENE	UG/KG	VOA	8	U	7	U	6	U	9	U	7	U
TRICHLOROETHENE	UG/KG	VOA	8	U	7	U	6	U	9	U	7	U
VINYL ACETATE	UG/KG	VOA	16	U	14	U	12	U	19	U	15	U
VINYL CHLORIDE	UG/KG	VOA	16	U	14	U	12	U	19	U	15	U
XYLENES (TOTAL)	UG/KG	VOA	8	U	7	U	6	U	9	U	7	U
1,1,1-TRICHLOROETHANE	UG/L	VOA										
1,1,2,2-TETRACHLOROETHANE	UG/L	VOA										
1,1,2-TRICHLOROETHANE	UG/L	VOA										
1,1-DICHLOROETHANE	UG/L	VOA										
1,1-DICHLOROETHENE	UG/L	VOA										
1,2-DICHLOROETHANE	UG/L	VOA										
1,2-DICHLOROETHANE-D4	UG/L	VOA										
1,2-DICHLOROETHENE (TOTAL)	UG/L	VOA										
1,2-DICHLOROPROPANE	UG/L	VOA										
2-BUTANONE	UG/L	VOA										
2-HEXANONE	UG/L	VOA										
4-METHYL-2-PENTANONE	UG/L	VOA										
ACETONE	UG/L	VOA										

NAVSTA-SAN DIEGO
SITE 4 WATER

		SAMPLE NUMBER:	NS4-BH7-S01-10		NS4-BH7-S02-15		NS4-BH8-S01-5		NS4-BH8-S02-10		NS4-BH8-S03-15	
		SAMPLING DATE:	01/28/91		01/28/91		01/28/91		01/28/91		01/28/91	
		BORING:	BH7		BH7		BH8		BH8		BH8	
		SITE:	NS4		NS4		NS4		NS4		NS4	
		DEPTH:	10		15		5		10		15	
COMPOUND NAME	UNITS	TEST CODE	RESULT	QUALIFIER	RESULT	QUALIFIER	RESULT	QUALIFIER	RESULT	QUALIFIER	RESULT	QUALIFIER
BENZENE	UG/L	VOA										
BROMODICHLOROMETHANE	UG/L	VOA										
BROMOFLUOROBENZENE	UG/L	VOA										
BROMOFORM	UG/L	VOA										
BROMOMETHANE	UG/L	VOA										
CARBON DISULFIDE	UG/L	VOA										
CARBON TETRACHLORIDE	UG/L	VOA										
CHLOROBENZENE	UG/L	VOA										
CHLOROETHANE	UG/L	VOA										
CHLOROFORM	UG/L	VOA										
CHLOROMETHANE	UG/L	VOA										
CIS-1,3-DICHLOROPROPENE	UG/L	VOA										
DIBROMOCHLOROMETHANE	UG/L	VOA										
ETHYLBENZENE	UG/L	VOA										
METHYLENE CHLORIDE	UG/L	VOA										
STYRENE	UG/L	VOA										
TETRACHLOROETHENE	UG/L	VOA										
TOLUENE	UG/L	VOA										
TOLUENE-D8	UG/L	VOA										
TRANS-1,3-DICHLOROPROPENE	UG/L	VOA										
TRICHLOROETHENE	UG/L	VOA										
VINYL ACETATE	UG/L	VOA										
VINYL CHLORIDE	UG/L	VOA										
XYLENES (TOTAL)	UG/L	VOA										

NAVSTA-SAN DIEGO
SITE 4 WATER

		SAMPLE NUMBER:	NS4-ER-1-28-91		NS4-ER-1-29-91		NS4-ER-2-11-91		NS4-FB-1-29-91		NS4-FB-1/25/91	
		SAMPLING DATE:	01/28/91		01/29/91		02/11/91		01/29/91		01/25/91	
		BORING:	ER		ER		ER		FB		FB	
		SITE:	NS4		NS4		NS4		NS4		NS4	
		DEPTH:	28-91		29-91		11-91		29-91		NS4-FB-1/25/91	
COMPOUND NAME	UNITS	TEST CODE	RESULT	QUALIFIER	RESULT	QUALIFIER	RESULT	QUALIFIER	RESULT	QUALIFIER	RESULT	QUALIFIER
1,2,4-TRICHLOROBENZENE	UG/KG	BNA	10	U	10	U	10	U	10	U	10	U
1,2-DICHLOROBENZENE	UG/KG	BNA	10	U	10	U	10	U	10	U	10	U
1,3-DICHLOROBENZENE	UG/KG	BNA	10	U	10	U	10	U	10	U	10	U
1,4-DICHLOROBENZENE	UG/KG	BNA	10	U	10	U	10	U	10	U	10	U
2,4,5-TRICHLOROPHENOL	UG/KG	BNA	50	U	50	U	50	U	50	U	50	U
2,4,6-TRICHLOROPHENOL	UG/KG	BNA	10	U	10	U	10	U	10	U	10	U
2,4-DICHLOROPHENOL	UG/KG	BNA	10	U	10	U	10	U	10	U	10	U
2,4-DIMETHYLPHENOL	UG/KG	BNA	10	U	10	U	10	U	10	U	10	U
2,4-DINITROPHENOL	UG/KG	BNA	50	U	50	U	50	U	50	U	50	U
2,4-DINITROTOLUENE	UG/KG	BNA	10	U	10	U	10	U	10	U	10	U
2,6-DINITROTOLUENE	UG/KG	BNA	10	U	10	U	10	U	10	U	10	U
2-CHLORONAPHTHALENE	UG/KG	BNA	10	U	10	U	10	U	10	U	10	U
2-CHLOROPHENOL	UG/KG	BNA	10	U	10	U	10	U	10	U	10	U
2-METHYLNAPHTHALENE	UG/KG	BNA	10	U	10	U	10	U	10	U	10	U
2-METHYLPHENOL	UG/KG	BNA	10	U	10	U	10	U	10	U	10	U
2-NITROANILINE	UG/KG	BNA	50	U	50	U	50	U	50	U	50	U
2-NITROPHENOL	UG/KG	BNA	10	U	10	U	10	U	10	U	10	U
3,3'-DICHLOROBENZIDINE	UG/KG	BNA	20	U	20	U	20	U	20	U	20	U
3-NITROANILINE	UG/KG	BNA	50	U	50	U	50	U	50	U	50	U
4,6-DINITRO-2-METHYLPHENOL	UG/KG	BNA	50	U	50	U	50	U	50	U	50	U
4-BROMOPHENYL-PHENYLETHER	UG/KG	BNA	10	U	10	U	10	U	10	U	10	U
4-CHLORO-3-METHYLPHENOL	UG/KG	BNA	10	U	10	U	10	U	10	U	10	U
4-CHLOROANILINE	UG/KG	BNA	10	U	10	U	10	U	10	U	10	U
4-CHLOROPHENYL-PHENYLETHER	UG/KG	BNA	10	U	10	U	10	U	10	U	10	U
4-METHYLPHENOL	UG/KG	BNA	10	U	10	U	10	U	10	U	10	U
4-NITROANILINE	UG/KG	BNA	50	U	50	U	50	U	50	U	50	U
4-NITROPHENOL	UG/KG	BNA	50	U	50	U	50	U	50	U	50	U
ACENAPHTHENE	UG/KG	BNA	10	U	10	U	10	U	10	U	10	U
ACENAPHTHYLENE	UG/KG	BNA	10	U	10	U	10	U	10	U	10	U
ANTHRACENE	UG/KG	BNA	10	U	10	U	10	U	10	U	10	U
BENZO(A)ANTHRACENE	UG/KG	BNA	10	U	10	U	10	U	10	U	10	U
BENZO(A)PYRENE	UG/KG	BNA	10	U	10	U	10	U	10	U	10	U
BENZO(B)FLUORANTHENE	UG/KG	BNA	10	U	10	U	10	U	10	U	10	U
BENZO(G,H,I)PERYLENE	UG/KG	BNA	10	U	10	U	10	U	10	U	10	U
BENZO(K)FLUORANTHENE	UG/KG	BNA	10	U	10	U	10	U	10	U	10	U
BENZOIC ACID	UG/KG	BNA	50	U	50	U	50	U	50	U	50	U
BENZYL ALCOHOL	UG/KG	BNA	10	U	2	J	10	U	10	U	10	U
BIS(2-CHLOROETHOXY)METHANE	UG/KG	BNA	10	U	10	U	10	U	10	U	10	U
BIS(2-CHLOROETHYL)ETHER	UG/KG	BNA	10	U	10	U	10	U	10	U	10	U
BIS(2-CHLOROISOPROPYL)ETHER	UG/KG	BNA	10	U	10	U	10	U	10	U	10	U
BIS(2-ETHYLHEXYL)PHTHALATE	UG/KG	BNA	10	U	10	U	10	U	10	U	10	U
BUTYLBENZYLPHTHALATE	UG/KG	BNA	10	U	10	U	10	U	10	U	10	U
CHRYSENE	UG/KG	BNA	10	U	10	U	10	U	10	U	10	U
DI-N-BUTYLPHTHALATE	UG/KG	BNA	10	U	10	U	10	U	10	U	10	U
DI-N-OCTYLPHTHALATE	UG/KG	BNA	10	U	10	U	10	U	10	U	10	U
DIBENZ(A,H)ANTHRACENE	UG/KG	BNA	10	U	10	U	10	U	10	U	10	U
DIBENZOFURAN	UG/KG	BNA	10	U	10	U	10	U	10	U	10	U
DIETHYLPHTHALATE	UG/KG	BNA	10	U	10	U	10	U	10	U	10	U
DIMETHYLPHTHALATE	UG/KG	BNA	10	U	10	U	10	U	10	U	10	U
FLUORANTHENE	UG/KG	BNA	10	U	10	U	10	U	10	U	10	U
FLUORENE	UG/KG	BNA	10	U	10	U	10	U	10	U	10	U

NAVSTA-SAN DIEGO
SITE 4 WATER

		SAMPLE NUMBER:	NS4-ER-1-28-91		NS4-ER-1-29-91		NS4-ER-2-11-91		NS4-FB-1-29-91		NS4-FB-1/25/91	
		SAMPLING DATE:	01/28/91		01/29/91		02/11/91		01/29/91		01/25/91	
		BORING:	ER		ER		ER		FB		FB	
		SITE:	NS4		NS4		NS4		NS4		NS4	
		DEPTH:	28-91		29-91		11-91		29-91		NS4-FB-1/25/91	
COMPOUND NAME	UNITS	TEST CODE	RESULT	QUALIFIER	RESULT	QUALIFIER	RESULT	QUALIFIER	RESULT	QUALIFIER	RESULT	QUALIFIER
HEXACHLOROBENZENE	UG/KG	BNA	10	U	10	U	10	U	10	U	10	U
HEXACHLOROBUTADIENE	UG/KG	BNA	10	U	10	U	10	U	10	U	10	U
HEXACHLOROCYCLOPENTADIENE	UG/KG	BNA	10	U	10	U	10	U	10	U	10	U
HEXACHLOROETHANE	UG/KG	BNA	10	U	10	U	10	U	10	U	10	U
INDENO(1,2,3-C,D)PYRENE	UG/KG	BNA	10	U	10	U	10	U	10	U	10	U
ISOPHORONE	UG/KG	BNA	10	U	10	U	10	U	10	U	10	U
N-NITROSO-DI-N-PROPYLAMINE	UG/KG	BNA	10	U	10	U	10	U	10	U	10	U
N-NITROSODIPHENYLAMINE (1)	UG/KG	BNA	10	U	10	U	10	U	10	U	10	U
NAPHTHALENE	UG/KG	BNA	10	U	10	U	10	U	10	U	10	U
NITROBENZENE	UG/KG	BNA	10	U	10	U	10	U	10	U	10	U
PENTACHLOROPHENOL	UG/KG	BNA	50	U	50	U	50	U	50	U	50	U
PHENANTHRENE	UG/KG	BNA	10	U	10	U	10	U	10	U	10	U
PHENOL	UG/KG	BNA	10	U	10	U	3	J	10	U	43	
PYRENE	UG/KG	BNA	10	U	10	U	10	U	10	U	10	U
1,2,4-TRICHLOROBENZENE	UG/L	BNA										
1,2-DICHLOROBENZENE	UG/L	BNA										
1,3-DICHLOROBENZENE	UG/L	BNA										
1,4-DICHLOROBENZENE	UG/L	BNA										
2,4,5-TRICHLOROPHENOL	UG/L	BNA										
2,4,6-TRIBROMOPHENOL	UG/L	BNA										
2,4,6-TRICHLOROPHENOL	UG/L	BNA										
2,4-DICHLOROPHENOL	UG/L	BNA										
2,4-DIMETHYLPHENOL	UG/L	BNA										
2,4-DINITROPHENOL	UG/L	BNA										
2,4-DINITROTOLUENE	UG/L	BNA										
2,6-DINITROTOLUENE	UG/L	BNA										
2-CHLORONAPHTHALENE	UG/L	BNA										
2-CHLOROPHENOL	UG/L	BNA										
2-FLUOROBIPHENYL	UG/L	BNA										
2-FLUOROPHENOL	UG/L	BNA										
2-METHYLNAPHTHALENE	UG/L	BNA										
2-METHYLPHENOL	UG/L	BNA										
2-NITROANILINE	UG/L	BNA										
2-NITROPHENOL	UG/L	BNA										
3,3'-DICHLOROBENZIDINE	UG/L	BNA										
3-NITROANILINE	UG/L	BNA										
4,6-DINITRO-2-METHYLPHENOL	UG/L	BNA										
4-BROMOPHENYL-PHENYLETHER	UG/L	BNA										
4-CHLORO-3-METHYLPHENOL	UG/L	BNA										
4-CHLOROANILINE	UG/L	BNA										
4-CHLOROPHENYL-PHENYLETHER	UG/L	BNA										
4-METHYLPHENOL	UG/L	BNA										
4-NITROANILINE	UG/L	BNA										
4-NITROPHENOL	UG/L	BNA										
ACENAPHTHENE	UG/L	BNA										
ACENAPHTHYLENE	UG/L	BNA										
ANTHRACENE	UG/L	BNA										
BENZO(A)ANTHRACENE	UG/L	BNA										
BENZO(A)PYRENE	UG/L	BNA										
BENZO(B)FLUORANTHENE	UG/L	BNA										
BENZO(G,H,I)PERYLENE	*UG/L*	*BNA*										

NAVSTA-SAN DIEGO
SITE 4 WATER

		SAMPLE NUMBER:	NS4-ER-1-28-91		NS4-ER-1-29-91		NS4-ER-2-11-91		NS4-FB-1-29-91		NS4-FB-1/25/91	
		SAMPLING DATE:	01/28/91		01/29/91		02/11/91		01/29/91		01/25/91	
		BORING:	ER		ER		ER		FB		FB	
		SITE:	NS4		NS4		NS4		NS4		NS4	
		DEPTH:	28-91		29-91		11-91		29-91		NS4-FB-1/25/91	
COMPOUND NAME	UNITS	TEST CODE	RESULT	QUALIFIER	RESULT	QUALIFIER	RESULT	QUALIFIER	RESULT	QUALIFIER	RESULT	QUALIFIER
BENZO(K)FLUORANTHENE	UG/L	BNA										
BENZOIC ACID	UG/L	BNA										
BENZYL ALCOHOL	UG/L	BNA										
BIS(2-CHLOROETHOXY)METHANE	UG/L	BNA										
BIS(2-CHLOROETHYL)ETHER	UG/L	BNA										
BIS(2-CHLOROISOPROPYL)ETHER	UG/L	BNA										
BIS(2-ETHYLHEXYL)PHTHALATE	UG/L	BNA										
BUTYLBENZYLPHTHALATE	UG/L	BNA										
CHRYSENE	UG/L	BNA										
DI-N-BUTYLPHTHALATE	UG/L	BNA										
DI-N-OCTYLPHTHALATE	UG/L	BNA										
DIBENZ(A,H)ANTHRACENE	UG/L	BNA										
DIBENZO(A,H)ANTHRACENE	UG/L	BNA										
DIBENZOFURAN	UG/L	BNA										
DIETHYLPHTHALATE	UG/L	BNA										
DIMETHYLPHTHALATE	UG/L	BNA										
FLUORANTHENE	UG/L	BNA										
FLUORENE	UG/L	BNA										
HEXACHLOROBENZENE	UG/L	BNA										
HEXACHLOROBUTADIENE	UG/L	BNA										
HEXACHLOROCYCLOPENTADIENE	UG/L	BNA										
HEXACHLOROETHANE	UG/L	BNA										
INDENO(1,2,3-C,D)PYRENE	UG/L	BNA										
ISOPHORONE	UG/L	BNA										
N-NITROSO-DI-N-PROPYLAMINE	UG/L	BNA										
N-NITROSODIPHENYLAMINE (1)	UG/L	BNA										
NAPHTHALENE	UG/L	BNA										
NITROBENZENE	UG/L	BNA										
NITROBENZENE-D5	UG/L	BNA										
PENTACHLOROPHENOL	UG/L	BNA										
PHENANTHRENE	UG/L	BNA										
PHENOL	UG/L	BNA										
PHENOL-D5	UG/L	BNA										
PYRENE	UG/L	BNA										
TERPHENYL-D14	UG/L	BNA										
ANTIMONY	MG/KG	CAC METALS										
ARSENIC	MG/KG	CAC METALS										
BARIUM	MG/KG	CAC METALS										
BERYLLIUM	MG/KG	CAC METALS										
CADMIUM	MG/KG	CAC METALS										
CHROMIUM	MG/KG	CAC METALS										
COBALT	MG/KG	CAC METALS										
COPPER	MG/KG	CAC METALS										
LEAD	MG/KG	CAC METALS										
MERCURY	MG/KG	CAC METALS										
MOLYBDENUM	MG/KG	CAC METALS										
NICKEL	MG/KG	CAC METALS										
SELENIUM	MG/KG	CAC METALS										
SILVER	MG/KG	CAC METALS										
THALLIUM	MG/KG	CAC METALS										
VANADIUM	MG/KG	CAC METALS										

NAVSTA-SAN DIEGO
SITE 4 WATER

		SAMPLE NUMBER:	NS4-ER-1-28-91		NS4-ER-1-29-91		NS4-ER-2-11-91		NS4-FB-1-29-91		NS4-FB-1/25/91	
		SAMPLING DATE:	01/28/91		01/29/91		02/11/91		01/29/91		01/25/91	
		BORING:	ER		ER		ER		FB		FB	
		SITE:	NS4		NS4		NS4		NS4		NS4	
		DEPTH:	28-91		29-91		11-91		29-91		NS4-FB-1/25/91	
COMPOUND NAME	UNITS	TEST CODE	RESULT	QUALIFIER	RESULT	QUALIFIER	RESULT	QUALIFIER	RESULT	QUALIFIER	RESULT	QUALIFIER
ZINC	MG/KG	CAC METALS										
ANTIMONY	UG/KG	CAC METALS	19.0	U	19.0	U	19.0	U	19.0	U	19.0	U
ARSENIC	UG/KG	CAC METALS	1.0	U	1.0	U	2.0	U	1.0	U	1.0	U
BARIUM	UG/KG	CAC METALS	8.6	B	8.1	B	12.9	B	5.9	B	10.1	B
BERYLLIUM	UG/KG	CAC METALS	1.0	U	1.0	U	1.0	U	1.0	U	1.0	U
CADMIUM	UG/KG	CAC METALS	4.0	U	4.0	U	4.0	U	4.0	U	4.0	U
CHROMIUM	UG/KG	CAC METALS	4.0	U	4.0	U	4.0	U	4.0	U	4.0	U
COBALT	UG/KG	CAC METALS	5.0	U	5.0	U	5.0	U	5.0	U	5.0	U
COPPER	UG/KG	CAC METALS	25.1		37.4		10.2	B	75.6		56.2	
LEAD	UG/KG	CAC METALS	2.1	B	7.7		4.1		9.7		7.0	
MERCURY	UG/KG	CAC METALS	0.20	U	0.20	U	0.20	U	0.20	U	0.20	U
MOLYBDENUM	UG/KG	CAC METALS	7.0	U	7.0	U	7.0	U	7.0	U	7.0	U
NICKEL	UG/KG	CAC METALS	9.0	U	9.0	U	9.0	U	16.6	B	9.0	U
SELENIUM	UG/KG	CAC METALS	2.0	U	2.0	U	1.0	U	2.0	U	2.0	U
SILVER	UG/KG	CAC METALS	5.3	B	6.2	B	3.0	U	4.3	B	4.8	B
THALLIUM	UG/KG	CAC METALS	1.0	U	2.0	U	1.2	B	2.0	U	1.0	U
VANADIUM	UG/KG	CAC METALS	4.2	B	4.2	B	18.0	B	3.6	B	3.6	B
ZINC	UG/KG	CAC METALS	717		497		159		1150		407	
ANTIMONY	UG/L	CAC METALS										
ARSENIC	UG/L	CAC METALS										
BARIUM	UG/L	CAC METALS										
BERYLLIUM	UG/L	CAC METALS										
CADMIUM	UG/L	CAC METALS										
CHROMIUM	UG/L	CAC METALS										
COBALT	UG/L	CAC METALS										
COPPER	UG/L	CAC METALS										
LEAD	UG/L	CAC METALS										
MERCURY	UG/L	CAC METALS										
MOLYBDENUM	UG/L	CAC METALS										
NICKEL	UG/L	CAC METALS										
SELENIUM	UG/L	CAC METALS										
SILVER	UG/L	CAC METALS										
THALLIUM	UG/L	CAC METALS										
VANADIUM	UG/L	CAC METALS										
ZINC	UG/L	CAC METALS										
CAC WET EXTRACTION	DATE	CAC WET EX										
COPPER	MG/L	CAC WET EX										
LEAD	MG/L	CAC WET EX										
TOTAL CYANIDE	MG/KG	CN										
TOTAL CYANIDE	MG/L	CN	0.02	UJ	0.02	U			0.02	U	0.02	U
4,4'-DDD	UG/KG	PEST / PCB	0.1	U	0.1	U	0.1	U	0.1	U	0.1	U
4,4'-DDE	UG/KG	PEST / PCB	0.1	U	0.1	U	0.1	U	0.1	U	0.1	U
4,4'-DDT	UG/KG	PEST / PCB	0.1	U	0.1	U	0.1	U	0.1	U	0.1	U
ALDRIN	UG/KG	PEST / PCB	0.05	U	0.05	U	0.05	U	0.05	U	0.05	U
ALPHA-BHC	UG/KG	PEST / PCB	0.05	U	0.05	U	0.05	U	0.05	U	0.05	U
ALPHA-CHLORDANE	UG/KG	PEST / PCB	0.5	U	0.5	U	0.5	U	0.5	U	0.5	U
BETA-BHC	UG/KG	PEST / PCB	0.05	U	0.05	U	0.05	U	0.05	U	0.05	U
DELTA-BHC	UG/KG	PEST / PCB	0.05	U	0.05	U	0.05	U	0.05	U	0.05	U
DIBUTYL CHLORENDATE	UG/KG	PEST / PCB	88		84		79		86		66	
DIELDRIN	UG/KG	PEST / PCB	0.1	U	0.1	U	0.1	U	0.1	U	0.1	U
ENDOSULFAN I	UG/KG	PEST / PCB	0.05	U	0.05	U	0.05	U	0.05	U	0.05	U

NAVSTA-SAN DIEGO
SITE 4 WATER

		SAMPLE NUMBER:	NS4-ER-1-28-91		NS4-ER-1-29-91		NS4-ER-2-11-91		NS4-FB-1-29-91		NS4-FB-1/25/91	
		SAMPLING DATE:	01/28/91		01/29/91		02/11/91		01/29/91		01/25/91	
		BORING:	ER		ER		ER		FB		FB	
		SITE:	NS4		NS4		NS4		NS4		NS4	
		DEPTH:	28-91		29-91		11-91		29-91		NS4-FB-1/25/91	
COMPOUND NAME	UNITS	TEST CODE	RESULT	QUALIFIER	RESULT	QUALIFIER	RESULT	QUALIFIER	RESULT	QUALIFIER	RESULT	QUALIFIER
ENDOSULFAN II	UG/KG	PEST / PCB	0.1	U	0.1	U	0.1	U	0.1	U	0.1	U
ENDOSULFAN SULFATE	UG/KG	PEST / PCB	0.1	U	0.1	U	0.1	U	0.1	U	0.1	U
ENDRIN	UG/KG	PEST / PCB	0.1	U	0.1	U	0.1	U	0.1	U	0.1	U
ENDRIN KETONE	UG/KG	PEST / PCB	0.1	U	0.1	U	0.1	U	0.1	U	0.1	U
GAMMA-BHC (LINDANE)	UG/KG	PEST / PCB	0.05	U	0.05	U	0.05	U	0.05	U	0.05	U
GAMMA-CHLORDANE	UG/KG	PEST / PCB	0.5	U	0.5	U	0.5	U	0.5	U	0.5	U
HEPTACHLOR	UG/KG	PEST / PCB	0.05	U	0.05	U	0.05	U	0.05	U	0.05	U
HEPTACHLOR EPOXIDE	UG/KG	PEST / PCB	0.05	U	0.05	U	0.05	U	0.05	U	0.05	U
METHOXYCHLOR	UG/KG	PEST / PCB	0.5	U	0.5	U	0.5	U	0.5	U	0.5	U
PCB-1016	UG/KG	PEST / PCB	0.5	U	0.5	U	0.5	U	0.5	U	0.5	U
PCB-1221	UG/KG	PEST / PCB	0.5	U	0.5	U	0.5	U	0.5	U	0.5	U
PCB-1232	UG/KG	PEST / PCB	0.5	U	0.5	U	0.5	U	0.5	U	0.5	U
PCB-1242	UG/KG	PEST / PCB	0.5	U	0.5	U	0.5	U	0.5	U	0.5	U
PCB-1248	UG/KG	PEST / PCB	0.5	U	0.5	U	0.5	U	0.5	U	0.5	U
PCB-1254	UG/KG	PEST / PCB	1	U	1	U	1	U	1	U	1	U
PCB-1260	UG/KG	PEST / PCB	1	U	1	U	1	U	1	U	1	U
TOXAPHENE	UG/KG	PEST / PCB	1	U	1	U	1	U	1	U	1	U
4,4'-DDD	UG/L	PEST / PCB										
4,4'-DDE	UG/L	PEST / PCB										
4,4'-DDT	UG/L	PEST / PCB										
ALDRIN	UG/L	PEST / PCB										
ALPHA-BHC	UG/L	PEST / PCB										
ALPHA-CHLORDANE	UG/L	PEST / PCB										
BETA-BHC	UG/L	PEST / PCB										
DELTA-BHC	UG/L	PEST / PCB										
DIBUTYL CHLORENDATE	UG/L	PEST / PCB										
DIELDRIN	UG/L	PEST / PCB										
ENDOSULFAN I	UG/L	PEST / PCB										
ENDOSULFAN II	UG/L	PEST / PCB										
ENDOSULFAN SULFATE	UG/L	PEST / PCB										
ENDRIN	UG/L	PEST / PCB										
ENDRIN KETONE	UG/L	PEST / PCB										
GAMMA-BHC (LINDANE)	UG/L	PEST / PCB										
GAMMA-CHLORDANE	UG/L	PEST / PCB										
HEPTACHLOR	UG/L	PEST / PCB										
HEPTACHLOR EPOXIDE	UG/L	PEST / PCB										
METHOXYCHLOR	UG/L	PEST / PCB										
PCB-1016	UG/L	PEST / PCB										
PCB-1221	UG/L	PEST / PCB										
PCB-1232	UG/L	PEST / PCB										
PCB-1242	UG/L	PEST / PCB										
PCB-1248	UG/L	PEST / PCB										
PCB-1254	UG/L	PEST / PCB										
PCB-1260	UG/L	PEST / PCB										
TOXAPHENE	UG/L	PEST / PCB										
DIESEL	MG/KG	TPHC										
JP4	MG/KG	TPHC										
JP5	MG/KG	TPHC										
STODDARD	MG/KG	TPHC										
DIESEL	UG/KG	TPHC									250	U
JP4	UG/KG	TPHC									270	

NAVSTA-SAN DIEGO
SITE 4 WATER

		SAMPLE NUMBER:	NS4-ER-1-28-91		NS4-ER-1-29-91		NS4-ER-2-11-91		NS4-FB-1-29-91		NS4-FB-1/25/91	
		SAMPLING DATE:	01/28/91		01/29/91		02/11/91		01/29/91		01/25/91	
		BORING:	ER		ER		ER		FB		FB	
		SITE:	NS4		NS4		NS4		NS4		NS4	
		DEPTH:	28-91		29-91		11-91		29-91		NS4-FB-1/25/91	
COMPOUND NAME	UNITS	TEST CODE	RESULT	QUALIFIER	RESULT	QUALIFIER	RESULT	QUALIFIER	RESULT	QUALIFIER	RESULT	QUALIFIER
JP5	UG/KG	TPHC									250	U
STODDARD	UG/KG	TPHC	250	U	250	U	250	U	250	U		
BENZO(A)PYRENE	UG/L	TPHC										
STODDARD	UG/L	TPHC										
1,1,1-TRICHLOROETHANE	UG/KG	VOA	5	U	5	U	5	U	5	U	5	U
1,1,2,2-TETRACHLOROETHANE	UG/KG	VOA	5	U	5	U	5	U	5	U	5	U
1,1,2-TRICHLOROETHANE	UG/KG	VOA	5	U	5	U	5	U	5	U	5	U
1,1-DICHLOROETHANE	UG/KG	VOA	5	U	5	U	5	U	5	U	5	U
1,1-DICHLOROETHENE	UG/KG	VOA	5	U	5	U	5	U	5	U	5	U
1,2-DICHLOROETHANE	UG/KG	VOA	5	U	2	J	5	U	5	U	5	U
1,2-DICHLOROETHENE (TOTAL)	UG/KG	VOA	5	U	5	U	5	U	5	U	5	U
1,2-DICHLOROPROPANE	UG/KG	VOA	5	U	5	U	5	U	5	U	5	U
2-BUTANONE	UG/KG	VOA	10	U	10	U	10	U	10	U	10	U
2-HEXANONE	UG/KG	VOA	10	U	10	U	10	U	10	U	10	U
4-METHYL-2-PENTANONE	UG/KG	VOA	10	U	10	U	10	U	10	U	10	U
ACETONE	UG/KG	VOA	11	B	10	U	11	B	10	U	14	
BENZENE	UG/KG	VOA	5	U	5	U	5	U	5	U	5	U
BROMODICHLOROMETHANE	UG/KG	VOA	10		8		8		11		15	
BROMOFORM	UG/KG	VOA	2	J	3	J	3	J	4	J	3	J
BROMOMETHANE	UG/KG	VOA	10	U	10	U	10	U	10	U	10	U
CARBON DISULFIDE	UG/KG	VOA	5	U	5	U	5	U	5	U	5	U
CARBON TETRACHLORIDE	UG/KG	VOA	5	U	5	U	5	U	5	U	5	U
CHLOROBENZENE	UG/KG	VOA	5	U	5	U	5	U	5	U	5	U
CHLOROETHANE	UG/KG	VOA	10	U	10	U	10	U	10	U	10	U
CHLOROFORM	UG/KG	VOA	8		5		6		8		14	
CHLOROMETHANE	UG/KG	VOA	10	U	10	U	10	U	10	U	10	U
CIS-1,3-DICHLOROPROPENE	UG/KG	VOA	5	U	5	U	5	U	5	U	5	U
DIBROMOCHLOROMETHANE	UG/KG	VOA	8		10		9		13		12	
ETHYLBENZENE	UG/KG	VOA	5	U	5	U	5	U	5	U	5	U
METHYLENE CHLORIDE	UG/KG	VOA	5	B	5	B	2	BJ	5	B	4	BJ
STYRENE	UG/KG	VOA	5	U	5	U	5	U	5	U	5	U
TETRACHLOROETHENE	UG/KG	VOA	5	U	3	J	5	U	5	U	5	U
TOLUENE	UG/KG	VOA	5	U	5	U	5	U	5	U	5	U
TRANS-1,3-DICHLOROPROPENE	UG/KG	VOA	5	U	5	U	5	U	5	U	5	U
TRICHLOROETHENE	UG/KG	VOA	5	U	1	J	5	U	5	U	5	U
VINYL ACETATE	UG/KG	VOA	10	U	10	U	10	U	10	U	10	U
VINYL CHLORIDE	UG/KG	VOA	10	U	10	U	10	U	10	U	10	U
XYLENES (TOTAL)	UG/KG	VOA	5	U	5	U	5	U	5	U	5	U
1,1,1-TRICHLOROETHANE	UG/L	VOA										
1,1,2,2-TETRACHLOROETHANE	UG/L	VOA										
1,1,2-TRICHLOROETHANE	UG/L	VOA										
1,1-DICHLOROETHANE	UG/L	VOA										
1,1-DICHLOROETHENE	UG/L	VOA										
1,2-DICHLOROETHANE	UG/L	VOA										
1,2-DICHLOROETHANE-D4	UG/L	VOA										
1,2-DICHLOROETHENE (TOTAL)	UG/L	VOA										
1,2-DICHLOROPROPANE	UG/L	VOA										
2-BUTANONE	UG/L	VOA										
2-HEXANONE	UG/L	VOA										
4-METHYL-2-PENTANONE	UG/L	VOA										
ACETONE	UG/L	VOA										

NAVSTA-SAN DIEGO
SITE 4 WATER

		SAMPLE NUMBER:	NS4-ER-1-28-91		NS4-ER-1-29-91		NS4-ER-2-11-91		NS4-FB-1-29-91		NS4-FB-1/25/91	
		SAMPLING DATE:	01/28/91		01/29/91		02/11/91		01/29/91		01/25/91	
		BORING:	ER		ER		ER		FB		FB	
		SITE:	NS4		NS4		NS4		NS4		NS4	
		DEPTH:	28-91		29-91		11-91		29-91		NS4-FB-1/25/91	
COMPOUND NAME	UNITS	TEST CODE	RESULT	QUALIFIER	RESULT	QUALIFIER	RESULT	QUALIFIER	RESULT	QUALIFIER	RESULT	QUALIFIER
BENZENE	UG/L	VOA										
BROMODICHLOROMETHANE	UG/L	VOA										
BROMOFLUOROBENZENE	UG/L	VOA										
BROMOFORM	UG/L	VOA										
BROMOMETHANE	UG/L	VOA										
CARBON DISULFIDE	UG/L	VOA										
CARBON TETRACHLORIDE	UG/L	VOA										
CHLOROBENZENE	UG/L	VOA										
CHLOROETHANE	UG/L	VOA										
CHLOROFORM	UG/L	VOA										
CHLOROMETHANE	UG/L	VOA										
CIS-1,3-DICHLOROPROPENE	UG/L	VOA										
DIBROMOCHLOROMETHANE	UG/L	VOA										
ETHYLBENZENE	UG/L	VOA										
METHYLENE CHLORIDE	UG/L	VOA										
STYRENE	UG/L	VOA										
TETRACHLOROETHENE	UG/L	VOA										
TOLUENE	UG/L	VOA										
TOLUENE-D8	UG/L	VOA										
TRANS-1,3-DICHLOROPROPENE	UG/L	VOA										
TRICHLOROETHENE	UG/L	VOA										
VINYL ACETATE	UG/L	VOA										
VINYL CHLORIDE	UG/L	VOA										
XYLENES (TOTAL)	UG/L	VOA										

NAVSTA-SAN DIEGO
SITE 4 WATER

		SAMPLE NUMBER:	NS4-FB-2-12-91		NS4-MW1-GW1		NS4-MW1-S01-10		NS4-MW1-S02-15		NS4-MW2-GW1	
		SAMPLING DATE:	02/12/91		02/13/91		01/29/91		01/29/91		02/11/91	
		BORING:	FB		MW1		MW1		MW1		MW2	
		SITE:	NS4		NS4		NS4		NS4		NS4	
		DEPTH:	12-91		NS4-MW1-GW1		10		15		NS4-MW2-GW1	
COMPOUND NAME	UNITS	TEST CODE	RESULT	QUALIFIER	RESULT	QUALIFIER	RESULT	QUALIFIER	RESULT	QUALIFIER	RESULT	QUALIFIER
1,2,4-TRICHLOROBENZENE	UG/KG	BNA	10	U			410	U	370	U		
1,2-DICHLOROBENZENE	UG/KG	BNA	10	U			410	U	370	U		
1,3-DICHLOROBENZENE	UG/KG	BNA	10	U			410	U	370	U		
1,4-DICHLOROBENZENE	UG/KG	BNA	10	U			410	U	370	U		
2,4,5-TRICHLOROPHENOL	UG/KG	BNA	50	U			2000	U	1800	U		
2,4,6-TRICHLOROPHENOL	UG/KG	BNA	10	U			410	U	370	U		
2,4-DICHLOROPHENOL	UG/KG	BNA	10	U			410	U	370	U		
2,4-DIMETHYLPHENOL	UG/KG	BNA	10	U			410	U	370	U		
2,4-DINITROPHENOL	UG/KG	BNA	50	U			2000	U	1800	U		
2,4-DINITROTOLUENE	UG/KG	BNA	10	U			410	U	370	U		
2,6-DINITROTOLUENE	UG/KG	BNA	10	U			410	U	370	U		
2-CHLORONAPHTHALENE	UG/KG	BNA	10	U			410	U	370	U		
2-CHLOROPHENOL	UG/KG	BNA	10	U			410	U	370	U		
2-METHYLNAPHTHALENE	UG/KG	BNA	10	U			410	U	370	U		
2-METHYLPHENOL	UG/KG	BNA	10	U			410	U	370	U		
2-NITROANILINE	UG/KG	BNA	50	U			2000	U	1800	U		
2-NITROPHENOL	UG/KG	BNA	10	U			410	U	370	U		
3,3'-DICHLOROBENZIDINE	UG/KG	BNA	20	U			820	U	750	U		
3-NITROANILINE	UG/KG	BNA	50	U			2000	U	1800	U		
4,6-DINITRO-2-METHYLPHENOL	UG/KG	BNA	50	U			2000	U	1800	U		
4-BROMOPHENYL-PHENYLETHER	UG/KG	BNA	10	U			410	U	370	U		
4-CHLORO-3-METHYLPHENOL	UG/KG	BNA	10	U			410	U	370	U		
4-CHLOROANILINE	UG/KG	BNA	10	U			410	U	370	U		
4-CHLOROPHENYL-PHENYLETHER	UG/KG	BNA	10	U			410	U	370	U		
4-METHYLPHENOL	UG/KG	BNA	10	U			410	U	370	U		
4-NITROANILINE	UG/KG	BNA	50	U			2000	U	1800	U		
4-NITROPHENOL	UG/KG	BNA	50	U			2000	U	1800	U		
ACENAPHTHENE	UG/KG	BNA	10	U			410	U	370	U		
ACENAPHTHYLENE	UG/KG	BNA	10	U			410	U	370	U		
ANTHRACENE	UG/KG	BNA	10	U			410	U	370	U		
BENZO(A)ANTHRACENE	UG/KG	BNA	10	U			410	U	370	U		
BENZO(A)PYRENE	UG/KG	BNA	10	U			410	U	370	U		
BENZO(B)FLUORANTHENE	UG/KG	BNA	10	U			410	U	370	U		
BENZO(G,H,I)PERYLENE	UG/KG	BNA	10	U			410	U	370	U		
BENZO(K)FLUORANTHENE	UG/KG	BNA	10	U			410	U	370	U		
BENZOIC ACID	UG/KG	BNA	50	U			2000	U	1800	U		
BENZYL ALCOHOL	UG/KG	BNA	10	U			410	U	370	U		
BIS(2-CHLOROETHOXY)METHANE	UG/KG	BNA	10	U			410	U	370	U		
BIS(2-CHLOROETHYL)ETHER	UG/KG	BNA	10	U			410	U	370	U		
BIS(2-CHLOROISOPROPYL)ETHER	UG/KG	BNA	10	U			410	U	370	U		
BIS(2-ETHYLHEXYL)PHTHALATE	UG/KG	BNA	10	U			410	U	370	U		
BUTYLBENZYLPHTHALATE	UG/KG	BNA	10	U			410	U	370	U		
CHRYSENE	UG/KG	BNA	10	U			410	U	370	U		
DI-N-BUTYLPHTHALATE	UG/KG	BNA	10	U			410	U	370	U		
DI-N-OCTYLPHTHALATE	UG/KG	BNA	10	U			410	U	370	U		
DIBENZ(A,H)ANTHRACENE	UG/KG	BNA	10	U			410	U	370	U		
DIBENZOFURAN	UG/KG	BNA	10	U			410	U	370	U		
DIETHYLPHTHALATE	UG/KG	BNA	10	U			410	U	370	U		
DIMETHYLPHTHALATE	UG/KG	BNA	10	U			410	U	370	U		
FLUORANTHENE	UG/KG	BNA	10	U			410	U	370	U		
FLUORENE	UG/KG	BNA	10	U			410	U	370	U		

NAVSTA-SAN DIEGO
SITE 4 WATER

		SAMPLE NUMBER:	NS4-FB-2-12-91		NS4-MW1-GW1		NS4-MW1-S01-10		NS4-MW1-S02-15		NS4-MW2-GW1	
		SAMPLING DATE:	02/12/91		02/13/91		01/29/91		01/29/91		02/11/91	
		BORING:	FB		MW1		MW1		MW1		MW2	
		SITE:	NS4		NS4		NS4		NS4		NS4	
		DEPTH:	12-91		NS4-MW1-GW1		10		15		NS4-MW2-GW1	
COMPOUND NAME	UNITS	TEST CODE	RESULT	QUALIFIER	RESULT	QUALIFIER	RESULT	QUALIFIER	RESULT	QUALIFIER	RESULT	QUALIFIER
HEXACHLOROBENZENE	UG/KG	BNA	10	U			410	U	370	U		
HEXACHLOROBUTADIENE	UG/KG	BNA	10	U			410	U	370	U		
HEXACHLOROCYCLOPENTADIENE	UG/KG	BNA	10	U			410	U	370	U		
HEXACHLOROETHANE	UG/KG	BNA	10	U			410	U	370	U		
INDENO(1,2,3-C,D)PYRENE	UG/KG	BNA	10	U			410	U	370	U		
ISOPHORONE	UG/KG	BNA	10	U			410	U	370	U		
N-NITROSO-DI-N-PROPYLAMINE	UG/KG	BNA	10	U			410	U	370	U		
N-NITROSODIPHENYLAMINE (1)	UG/KG	BNA	10	U			410	U	370	U		
NAPHTHALENE	UG/KG	BNA	10	U			410	U	370	U		
NITROBENZENE	UG/KG	BNA	10	U			410	U	370	U		
PENTACHLOROPHENOL	UG/KG	BNA	50	U			2000	U	1800	U		
PHENANTHRENE	UG/KG	BNA	10	U			410	U	370	U		
PHENOL	UG/KG	BNA	10	U			410	U	370	U		
PYRENE	UG/KG	BNA	10	U			410	U	370	U		
1,2,4-TRICHLOROBENZENE	UG/L	BNA			10	U					10	U
1,2-DICHLOROBENZENE	UG/L	BNA			10	U					10	U
1,3-DICHLOROBENZENE	UG/L	BNA			10	U					10	U
1,4-DICHLOROBENZENE	UG/L	BNA			10	U					10	U
2,4,5-TRICHLOROPHENOL	UG/L	BNA			50	U					50	U
2,4,6-TRIBROMOPHENOL	UG/L	BNA									37	
2,4,6-TRICHLOROPHENOL	UG/L	BNA			10	U					10	U
2,4-DICHLOROPHENOL	UG/L	BNA			10	U					10	U
2,4-DIMETHYLPHENOL	UG/L	BNA			10	U					10	U
2,4-DINITROPHENOL	UG/L	BNA			50	U					50	U
2,4-DINITROTOLUENE	UG/L	BNA			10	U					10	U
2,6-DINITROTOLUENE	UG/L	BNA			10	U					10	U
2-CHLORONAPHTHALENE	UG/L	BNA			10	U					10	U
2-CHLOROPHENOL	UG/L	BNA			10	U					10	U
2-FLUOROBIPHENYL	UG/L	BNA			82						84	
2-FLUOROPHENOL	UG/L	BNA									37	
2-METHYLNAPHTHALENE	UG/L	BNA			10	U					10	U
2-METHYLPHENOL	UG/L	BNA			10	U					10	U
2-NITROANILINE	UG/L	BNA			50	U					50	U
2-NITROPHENOL	UG/L	BNA			10	U					10	U
3,3'-DICHLOROBENZIDINE	UG/L	BNA			20	U					20	U
3-NITROANILINE	UG/L	BNA			50	U					50	U
4,6-DINITRO-2-METHYLPHENOL	UG/L	BNA			50	U					50	U
4-BROMOPHENYL-PHENYLETHER	UG/L	BNA			10	U					10	U
4-CHLORO-3-METHYLPHENOL	UG/L	BNA			10	U					10	U
4-CHLOROANILINE	UG/L	BNA			10	U					10	U
4-CHLOROPHENYL-PHENYLETHER	UG/L	BNA			10	U					10	U
4-METHYLPHENOL	UG/L	BNA			10	U					10	U
4-NITROANILINE	UG/L	BNA			50	U					50	U
4-NITROPHENOL	UG/L	BNA			50	U					50	U
ACENAPHTHENE	UG/L	BNA			10	U					10	U
ACENAPHTHYLENE	UG/L	BNA			10	U					10	U
ANTHRACENE	UG/L	BNA			10	U					10	U
BENZO(A)ANTHRACENE	UG/L	BNA			10	U					10	U
BENZO(A)PYRENE	UG/L	BNA			50						64	
BENZO(B)FLUORANTHENE	UG/L	BNA			10	U					10	U
BENZO(G,H,I)PERYLENE	UG/L	BNA			10	U					10	U

NAVSTA-SAN DIEGO
SITE 4 WATER

		SAMPLE NUMBER:	NS4-FB-2-12-91		NS4-MW1-GW1		NS4-MW1-S01-10		NS4-MW1-S02-15		NS4-MW2-GW1	
		SAMPLING DATE:	02/12/91		02/13/91		01/29/91		01/29/91		02/11/91	
		BORING:	FB		MW1		MW1		MW1		MW2	
		SITE:	NS4		NS4		NS4		NS4		NS4	
		DEPTH:	12-91		NS4-MW1-GW1		10		15		NS4-MW2-GW1	
COMPOUND NAME	UNITS	TEST CODE	RESULT	QUALIFIER	RESULT	QUALIFIER	RESULT	QUALIFIER	RESULT	QUALIFIER	RESULT	QUALIFIER
BENZO(K)FLUORANTHENE	UG/L	BNA			10	U					10	U
BENZOIC ACID	UG/L	BNA			50	U					50	U
BENZYL ALCOHOL	UG/L	BNA			10	U					10	U
BIS(2-CHLOROETHOXY)METHANE	UG/L	BNA			10	U					10	U
BIS(2-CHLOROETHYL)ETHER	UG/L	BNA			10	U					10	U
BIS(2-CHLOROISOPROPYL)ETHER	UG/L	BNA			10	U					10	U
BIS(2-ETHYLHEXYL)PHTHALATE	UG/L	BNA			10	U					10	U
BUTYLBENZYLPHTHALATE	UG/L	BNA			10	U					10	U
CHRYSENE	UG/L	BNA			10	U					10	U
DI-N-BUTYLPHTHALATE	UG/L	BNA			10	U					10	U
DI-N-OCTYLPHTHALATE	UG/L	BNA			10	U					10	U
DIBENZ(A,H)ANTHRACENE	UG/L	BNA			10	U					10	U
DIBENZO(A,H)ANTHRACENE	UG/L	BNA										
DIBENZOFURAN	UG/L	BNA			10	U					10	U
DIETHYLPHTHALATE	UG/L	BNA			10	U					10	U
DIMETHYLPHTHALATE	UG/L	BNA			10	U					10	U
FLUORANTHENE	UG/L	BNA			10	U					10	U
FLUORENE	UG/L	BNA			10	U					10	U
HEXACHLOROBENZENE	UG/L	BNA			10	U					10	U
HEXACHLOROBUTADIENE	UG/L	BNA			10	U					10	U
HEXACHLOROCYCLOPENTADIENE	UG/L	BNA			10	U					10	U
HEXACHLOROETHANE	UG/L	BNA			10	U					10	U
INDENO(1,2,3-C,D)PYRENE	UG/L	BNA			10	U					10	U
ISOPHORONE	UG/L	BNA			10	U					10	U
N-NITROSO-DI-N-PROPYLAMINE	UG/L	BNA			10	U					10	U
N-NITROSODIPHENYLAMINE (1)	UG/L	BNA			10	U					10	U
NAPHTHALENE	UG/L	BNA			10	U					10	U
NITROBENZENE	UG/L	BNA			10	U					10	U
NITROBENZENE-D5	UG/L	BNA									82	
PENTACHLOROPHENOL	UG/L	BNA			50	U					50	U
PHENANTHRENE	UG/L	BNA			10	U					10	U
PHENOL	UG/L	BNA			10	U					10	U
PHENOL-D5	UG/L	BNA									56	
PYRENE	UG/L	BNA			10	U					10	U
TERPHENYL-D14	UG/L	BNA			84						94	
ANTIMONY	MG/KG	CAC METALS					4.3	U	4.0	U		
ARSENIC	MG/KG	CAC METALS					1.8	B	0.33	U		
BARIUM	MG/KG	CAC METALS					14.4	B	24.8	B		
BERYLLIUM	MG/KG	CAC METALS					0.86	B	1.7			
CADMIUM	MG/KG	CAC METALS					0.91	U	0.85	U		
CHROMIUM	MG/KG	CAC METALS					6.6		10.5			
COBALT	MG/KG	CAC METALS					2.0	B	4.8	B		
COPPER	MG/KG	CAC METALS					4.8	U	5.2	U		
LEAD	MG/KG	CAC METALS					2.7	U	3.9	U		
MERCURY	MG/KG	CAC METALS					0.18	U	0.25			
MOLYBDENUM	MG/KG	CAC METALS					1.6	U	2.2	B		
NICKEL	MG/KG	CAC METALS					2.1	U	2.1	U		
SELENIUM	MG/KG	CAC METALS					0.65	B	0.44	U		
SILVER	MG/KG	CAC METALS					0.89	U	0.94	U		
THALLIUM	MG/KG	CAC METALS					0.45	U	0.44	B		
VANADIUM	MG/KG	CAC METALS					17.5		32.7			

NAVSTA-SAN DIEGO
SITE 4 WATER

		SAMPLE NUMBER:	NS4-FB-2-12-91		NS4-MW1-GW1		NS4-MW1-S01-10		NS4-MW1-S02-15		NS4-MW2-GW1	
		SAMPLING DATE:	02/12/91		02/13/91		01/29/91		01/29/91		02/11/91	
		BORING:	FB		MW1		MW1		MW1		MW2	
		SITE:	NS4		NS4		NS4		NS4		NS4	
		DEPTH:	12-91		NS4-MW1-GW1		10		15		NS4-MW2-GW1	
COMPOUND NAME	UNITS	TEST CODE	RESULT	QUALIFIER	RESULT	QUALIFIER	RESULT	QUALIFIER	RESULT	QUALIFIER	RESULT	QUALIFIER
ZINC	MG/KG	CAC METALS					14.6	U	21.2	U		
ANTIMONY	UG/KG	CAC METALS	19.0	U								
ARSENIC	UG/KG	CAC METALS	2.0	U								
BARIUM	UG/KG	CAC METALS	14.2	B								
BERYLLIUM	UG/KG	CAC METALS	1.0	U								
CADMIUM	UG/KG	CAC METALS	4.0	U								
CHROMIUM	UG/KG	CAC METALS	4.0	U								
COBALT	UG/KG	CAC METALS	5.0	U								
COPPER	UG/KG	CAC METALS	30.7									
LEAD	UG/KG	CAC METALS	1.7	B								
MERCURY	UG/KG	CAC METALS	0.20	U								
MOLYBDENUM	UG/KG	CAC METALS	7.0	U								
NICKEL	UG/KG	CAC METALS	9.0	U								
SELENIUM	UG/KG	CAC METALS	1.0	U								
SILVER	UG/KG	CAC METALS	3.0	U								
THALLIUM	UG/KG	CAC METALS	1.0	U								
VANADIUM	UG/KG	CAC METALS	16.7	B								
ZINC	UG/KG	CAC METALS	166									
ANTIMONY	UG/L	CAC METALS			43.6	B					45.6	B
ARSENIC	UG/L	CAC METALS			20.0	U					2.0	U
BARIUM	UG/L	CAC METALS			96.2	B					71.1	B
BERYLLIUM	UG/L	CAC METALS			1.0	U					1.0	B
CADMIUM	UG/L	CAC METALS			8.7						4.0	U
CHROMIUM	UG/L	CAC METALS			4.0	U					4.0	U
COBALT	UG/L	CAC METALS			5.0	U					5.0	U
COPPER	UG/L	CAC METALS			6.0	U					6.0	U
LEAD	UG/L	CAC METALS			10.0	U					1.0	U
MERCURY	UG/L	CAC METALS			0.20	U					0.20	U
MOLYBDENUM	UG/L	CAC METALS			24.5	B					24.5	B
NICKEL	UG/L	CAC METALS			9.0	U					9.0	U
SELENIUM	UG/L	CAC METALS			10.0	B					1.0	UJ
SILVER	UG/L	CAC METALS			6.7	B					8.5	UJ
THALLIUM	UG/L	CAC METALS			10.0	U					10.0	U
VANADIUM	UG/L	CAC METALS			41.3	U					49.9	U
ZINC	UG/L	CAC METALS			50.6	U					52.7	U
CAC WET EXTRACTION	DATE	CAC WET EX										
COPPER	MG/L	CAC WET EX										
LEAD	MG/L	CAC WET EX										
TOTAL CYANIDE	MG/KG	CN					1	U	1	U		
TOTAL CYANIDE	MG/L	CN										
4,4'-DDD	UG/KG	PEST / PCB	0.1	U			20	U	18	U		
4,4'-DDE	UG/KG	PEST / PCB	0.1	U			20	U	18	U		
4,4'-DDT	UG/KG	PEST / PCB	0.1	U			20	U	18	U		
ALDRIN	UG/KG	PEST / PCB	0.05	U			9.9	U	9.1	U		
ALPHA-BHC	UG/KG	PEST / PCB	0.05	U			9.9	U	9.1	U		
ALPHA-CHLORDANE	UG/KG	PEST / PCB	0.5	U			99	U	91	U		
BETA-BHC	UG/KG	PEST / PCB	0.05	U			9.9	U	9.1	U		
DELTA-BHC	UG/KG	PEST / PCB	0.05	U			9.9	U	9.1	U		
DIBUTYL CHLORENDATE	UG/KG	PEST / PCB	46				77		79			
DIELDRIN	UG/KG	PEST / PCB	0.1	U			20	U	18	U		
ENDOSULFAN I	UG/KG	PEST / PCB	0.05	U			9.9	U	9.1	U		

NAVSTA-SAN DIEGO
SITE 4 WATER

		SAMPLE NUMBER:	NS4-FB-2-12-91		NS4-MW1-GW1		NS4-MW1-S01-10		NS4-MW1-S02-15		NS4-MW2-GW1	
		SAMPLING DATE:	02/12/91		02/13/91		01/29/91		01/29/91		02/11/91	
		BORING:	FB		MW1		MW1		MW1		MW2	
		SITE:	NS4		NS4		NS4		NS4		NS4	
		DEPTH:	12-91		NS4-MW1-GW1		10		15		NS4-MW2-GW1	
COMPOUND NAME	UNITS	TEST CODE	RESULT	QUALIFIER	RESULT	QUALIFIER	RESULT	QUALIFIER	RESULT	QUALIFIER	RESULT	QUALIFIER
ENDOSULFAN II	UG/KG	PEST / PCB	0.1	U			20	U	18	U		
ENDOSULFAN SULFATE	UG/KG	PEST / PCB	0.1	U			20	U	18	U		
ENDRIN	UG/KG	PEST / PCB	0.1	U			20	U	18	U		
ENDRIN KETONE	UG/KG	PEST / PCB	0.1	U			20	U	18	U		
GAMMA-BHC (LINDANE)	UG/KG	PEST / PCB	0.05	U			9.9	U	9.1	U		
GAMMA-CHLORDANE	UG/KG	PEST / PCB	0.5	U			99	U	91	U		
HEPTACHLOR	UG/KG	PEST / PCB	0.05	U			9.9	U	9.1	U		
HEPTACHLOR EPOXIDE	UG/KG	PEST / PCB	0.05	U			9.9	U	9.1	U		
METHOXYCHLOR	UG/KG	PEST / PCB	0.5	U			99	U	91	U		
PCB-1016	UG/KG	PEST / PCB	0.5	U			99	U	91	U		
PCB-1221	UG/KG	PEST / PCB	0.5	U			99	U	91	U		
PCB-1232	UG/KG	PEST / PCB	0.5	U			99	U	91	U		
PCB-1242	UG/KG	PEST / PCB	0.5	U			99	U	91	U		
PCB-1248	UG/KG	PEST / PCB	0.5	U			99	U	91	U		
PCB-1254	UG/KG	PEST / PCB	1	U			200	U	180	U		
PCB-1260	UG/KG	PEST / PCB	1	U			200	U	180	U		
TOXAPHENE	UG/KG	PEST / PCB	1	U			200	U	180	U		
4,4'-DDD	UG/L	PEST / PCB			0.1	U					0.1	U
4,4'-DDE	UG/L	PEST / PCB			0.1	U					0.1	U
4,4'-DDT	UG/L	PEST / PCB			0.1	U					0.1	U
ALDRIN	UG/L	PEST / PCB			0.05	U					0.05	U
ALPHA-BHC	UG/L	PEST / PCB			0.05	U					0.05	U
ALPHA-CHLORDANE	UG/L	PEST / PCB			0.5	U					0.5	U
BETA-BHC	UG/L	PEST / PCB			0.05	U					0.05	U
DELTA-BHC	UG/L	PEST / PCB			0.05	U					0.05	U
DIBUTYL CHLORENDATE	UG/L	PEST / PCB			67						79	
DIELDRIN	UG/L	PEST / PCB			0.1	U					0.1	U
ENDOSULFAN I	UG/L	PEST / PCB			0.05	U					0.05	U
ENDOSULFAN II	UG/L	PEST / PCB			0.1	U					0.1	U
ENDOSULFAN SULFATE	UG/L	PEST / PCB			0.1	U					0.1	U
ENDRIN	UG/L	PEST / PCB			0.1	U					0.1	U
ENDRIN KETONE	UG/L	PEST / PCB			0.1	U					0.1	U
GAMMA-BHC (LINDANE)	UG/L	PEST / PCB			0.05	U					0.05	U
GAMMA-CHLORDANE	UG/L	PEST / PCB			0.5	U					0.5	U
HEPTACHLOR	UG/L	PEST / PCB			0.05	U					0.05	U
HEPTACHLOR EPOXIDE	UG/L	PEST / PCB			0.05	U					0.05	U
METHOXYCHLOR	UG/L	PEST / PCB			0.5	U					0.5	U
PCB-1016	UG/L	PEST / PCB			0.5	U					0.5	U
PCB-1221	UG/L	PEST / PCB			0.5	U					0.5	U
PCB-1232	UG/L	PEST / PCB			0.5	U					0.5	U
PCB-1242	UG/L	PEST / PCB			0.5	U					0.5	U
PCB-1248	UG/L	PEST / PCB			0.5	U					0.5	U
PCB-1254	UG/L	PEST / PCB			1	U					1	U
PCB-1260	UG/L	PEST / PCB			1	U					1	U
TOXAPHENE	UG/L	PEST / PCB			1	U					1	U
DIESEL	MG/KG	TPHC										
JP4	MG/KG	TPHC										
JP5	MG/KG	TPHC										
STODDARD	MG/KG	TPHC					10	U	10	U		
DIESEL	UG/KG	TPHC										
JP4	UG/KG	TPHC										

NAVSTA-SAN DIEGO
SITE 4 WATER

		SAMPLE NUMBER:	NS4-FB-2-12-91		NS4-MW1-GW1		NS4-MW1-S01-10		NS4-MW1-S02-15		NS4-MW2-GW1	
		SAMPLING DATE:	02/12/91		02/13/91		01/29/91		01/29/91		02/11/91	
		BORING:	FB		MW1		MW1		MW1		MW2	
		SITE:	NS4		NS4		NS4		NS4		NS4	
		DEPTH:	12-91		NS4-MW1-GW1		10		15		NS4-MW2-GW1	
COMPOUND NAME	UNITS	TEST CODE	RESULT	QUALIFIER	RESULT	QUALIFIER	RESULT	QUALIFIER	RESULT	QUALIFIER	RESULT	QUALIFIER
JP5	UG/KG	TPHC										
STODDARD	UG/KG	TPHC	250	U								
BENZO(A)PYRENE	UG/L	TPHC			50						64	
STODDARD	UG/L	TPHC			880						250	U
1,1,1-TRICHLOROETHANE	UG/KG	VOA	5	U			6	U	6	U		
1,1,2,2-TETRACHLOROETHANE	UG/KG	VOA	5	U			6	U	6	U		
1,1,2-TRICHLOROETHANE	UG/KG	VOA	5	U			6	U	6	U		
1,1-DICHLOROETHANE	UG/KG	VOA	5	U			6	U	6	U		
1,1-DICHLOROETHENE	UG/KG	VOA	5	U			6	U	6	U		
1,2-DICHLOROETHANE	UG/KG	VOA	5	U			6	U	6	U		
1,2-DICHLOROETHENE (TOTAL)	UG/KG	VOA	5	U			6	U	6	U		
1,2-DICHLOROPROPANE	UG/KG	VOA	5	U			6	U	6	U		
2-BUTANONE	UG/KG	VOA	10	U			12	U	11	U		
2-HEXANONE	UG/KG	VOA	10	U			12	U	11	U		
4-METHYL-2-PENTANONE	UG/KG	VOA	10	U			12	U	11	U		
ACETONE	UG/KG	VOA	10	U			20	U	11	J		
BENZENE	UG/KG	VOA	5	U			6	U	6	U		
BROMODICHLOROMETHANE	UG/KG	VOA	18				6	U	6	U		
BROMOFORM	UG/KG	VOA	4	J			6	U	6	U		
BROMOMETHANE	UG/KG	VOA	10	U			12	U	11	U		
CARBON DISULFIDE	UG/KG	VOA	5	U			6	U	6	U		
CARBON TETRACHLORIDE	UG/KG	VOA	5	U			6	U	6	U		
CHLOROBENZENE	UG/KG	VOA	5	U			6	U	6	U		
CHLOROETHANE	UG/KG	VOA	10	U			12	U	11	U		
CHLOROFORM	UG/KG	VOA	16				6	U	6	U		
CHLOROMETHANE	UG/KG	VOA	10	U			12	U	11	U		
CIS-1,3-DICHLOROPROPENE	UG/KG	VOA	5	U			6	U	6	U		
DIBROMOCHLOROMETHANE	UG/KG	VOA	16				6	U	6	U		
ETHYLBENZENE	UG/KG	VOA	5	U			6	U	6	U		
METHYLENE CHLORIDE	UG/KG	VOA	2	BJ			8	U	8	U		
STYRENE	UG/KG	VOA	5	U			6	U	6	U		
TETRACHLOROETHENE	UG/KG	VOA	5	U			6	U	6	U		
TOLUENE	UG/KG	VOA	5	U			6	U	6	U		
TRANS-1,3-DICHLOROPROPENE	UG/KG	VOA	5	U			6	U	6	U		
TRICHLOROETHENE	UG/KG	VOA	5	U			6	U	6	U		
VINYL ACETATE	UG/KG	VOA	10	U			12	U	11	U		
VINYL CHLORIDE	UG/KG	VOA	10	U			12	U	11	U		
XYLENES (TOTAL)	UG/KG	VOA	5	U			6	U	6	U		
1,1,1-TRICHLOROETHANE	UG/L	VOA			5	U					5	U
1,1,2,2-TETRACHLOROETHANE	UG/L	VOA			5	U					5	U
1,1,2-TRICHLOROETHANE	UG/L	VOA			5	U					5	U
1,1-DICHLOROETHANE	UG/L	VOA			5	U					5	U
1,1-DICHLOROETHENE	UG/L	VOA			5	U					5	U
1,2-DICHLOROETHANE	UG/L	VOA			5	U					5	U
1,2-DICHLOROETHANE-D4	UG/L	VOA			97						86	
1,2-DICHLOROETHENE (TOTAL)	UG/L	VOA			5	U					5	U
1,2-DICHLOROPROPANE	UG/L	VOA			5	U					5	U
2-BUTANONE	UG/L	VOA			10	U					10	U
2-HEXANONE	UG/L	VOA			10	U					10	U
4-METHYL-2-PENTANONE	UG/L	VOA			10	U					10	U
ACETONE	UG/L	VOA			10	U					10	U

NAVSTA-SAN DIEGO
SITE 4 WATER

		SAMPLE NUMBER:	NS4-FB-2-12-91		NS4-MW1-GW1		NS4-MW1-S01-10		NS4-MW1-S02-15		NS4-MW2-GW1	
		SAMPLING DATE:	02/12/91		02/13/91		01/29/91		01/29/91		02/11/91	
		BORING:	FB		MW1		MW1		MW1		MW2	
		SITE:	NS4		NS4		NS4		NS4		NS4	
		DEPTH:	12-91		NS4-MW1-GW1		10		15		NS4-MW2-GW1	
COMPOUND NAME	UNITS	TEST CODE	RESULT	QUALIFIER	RESULT	QUALIFIER	RESULT	QUALIFIER	RESULT	QUALIFIER	RESULT	QUALIFIER
BENZENE	UG/L	VOA			5	U					5	U
BROMODICHLOROMETHANE	UG/L	VOA			5	U					5	U
BROMOFLUOROBENZENE	UG/L	VOA			92						90	
BROMOFORM	UG/L	VOA			5	U					5	U
BROMOMETHANE	UG/L	VOA			10	U					10	U
CARBON DISULFIDE	UG/L	VOA			5	U					5	U
CARBON TETRACHLORIDE	UG/L	VOA			5	U					5	U
CHLOROBENZENE	UG/L	VOA			5	U					5	U
CHLOROETHANE	UG/L	VOA			10	U					10	U
CHLOROFORM	UG/L	VOA			5	U					5	U
CHLOROMETHANE	UG/L	VOA			10	U					10	U
CIS-1,3-DICHLOROPROPENE	UG/L	VOA			5	U					5	U
DIBROMOCHLOROMETHANE	UG/L	VOA			5	U					5	U
ETHYLBENZENE	UG/L	VOA			5	U					5	U
METHYLENE CHLORIDE	UG/L	VOA			5	U					5	U
STYRENE	UG/L	VOA			5	U					5	U
TETRACHLOROETHENE	UG/L	VOA			5	U					5	U
TOLUENE	UG/L	VOA			5	U					5	U
TOLUENE-D8	UG/L	VOA			90						91	
TRANS-1,3-DICHLOROPROPENE	UG/L	VOA			5	U					5	U
TRICHLOROETHENE	UG/L	VOA			5	U					55	
VINYL ACETATE	UG/L	VOA			10	U					10	U
VINYL CHLORIDE	UG/L	VOA			10	U					10	U
XYLENES (TOTAL)	UG/L	VOA			5	U					5	U

NAVSTA-SAN DIEGO
SITE 4 WATER

		SAMPLE NUMBER:	NS4-MW2-S01-5		NS4-MW2-S02-10		NS4-MW2-S03-15		NS4-MW3-GW1		NS4-MW3-S01-5	
		SAMPLING DATE:	01/28/91		01/28/91		01/28/91		02/12/91		01/28/91	
		BORING:	MW2		MW2		MW2		MW3		MW3	
		SITE:	NS4		NS4		NS4		NS4		NS4	
		DEPTH:	5		10		15		NS4-MW3-GW1		5	
COMPOUND NAME	UNITS	TEST CODE	RESULT	QUALIFIER	RESULT	QUALIFIER	RESULT	QUALIFIER	RESULT	QUALIFIER	RESULT	QUALIFIER
1,2,4-TRICHLOROBENZENE	UG/KG	BNA	340	U	360	U	470	U			7200	U
1,2-DICHLOROBENZENE	UG/KG	BNA	340	U	360	U	470	U			7200	U
1,3-DICHLOROBENZENE	UG/KG	BNA	340	U	360	U	470	U			7200	U
1,4-DICHLOROBENZENE	UG/KG	BNA	340	U	360	U	470	U			7200	U
2,4,5-TRICHLOROPHENOL	UG/KG	BNA	1600	U	1700	U	2300	U			35000	U
2,4,6-TRICHLOROPHENOL	UG/KG	BNA	340	U	360	U	470	U			7200	U
2,4-DICHLOROPHENOL	UG/KG	BNA	340	U	360	U	470	U			7200	U
2,4-DIMETHYLPHENOL	UG/KG	BNA	340	U	360	U	470	U			7200	U
2,4-DINITROPHENOL	UG/KG	BNA	1600	U	1700	U	2300	U			35000	U
2,4-DINITROTOLUENE	UG/KG	BNA	340	U	360	U	470	U			7200	U
2,6-DINITROTOLUENE	UG/KG	BNA	340	U	360	U	470	U			7200	U
2-CHLORONAPHTHALENE	UG/KG	BNA	340	U	360	U	470	U			7200	U
2-CHLOROPHENOL	UG/KG	BNA	340	U	360	U	470	U			7200	U
2-METHYLNAPHTHALENE	UG/KG	BNA	340	U	360	U	470	U			7200	U
2-METHYLPHENOL	UG/KG	BNA	340	U	360	U	470	U			7200	U
2-NITROANILINE	UG/KG	BNA	1600	U	1700	U	2300	U			35000	U
2-NITROPHENOL	UG/KG	BNA	340	U	360	U	470	U			7200	U
3,3'-DICHLOROBENZIDINE	UG/KG	BNA	670	U	720	U	940	U			14000	U
3-NITROANILINE	UG/KG	BNA	1600	U	1700	U	2300	U			35000	U
4,6-DINITRO-2-METHYLPHENOL	UG/KG	BNA	1600	U	1700	U	2300	U			35000	U
4-BROMOPHENYL-PHENYLETHER	UG/KG	BNA	340	U	360	U	470	U			7200	U
4-CHLORO-3-METHYLPHENOL	UG/KG	BNA	340	U	360	U	470	U			7200	U
4-CHLOROANILINE	UG/KG	BNA	340	U	360	U	470	U			7200	U
4-CHLOROPHENYL-PHENYLETHER	UG/KG	BNA	340	U	360	U	470	U			7200	U
4-METHYLPHENOL	UG/KG	BNA	340	U	360	U	470	U			7200	U
4-NITROANILINE	UG/KG	BNA	1600	U	1700	U	2300	U			35000	U
4-NITROPHENOL	UG/KG	BNA	1600	U	1700	U	2300	U			35000	U
ACENAPHTHENE	UG/KG	BNA	340	U	360	U	470	U			7200	U
ACENAPHTHYLENE	UG/KG	BNA	340	U	360	U	470	U			7200	U
ANTHRACENE	UG/KG	BNA	340	U	360	U	470	U			7200	U
BENZO(A)ANTHRACENE	UG/KG	BNA	340	U	360	U	470	U			7200	U
BENZO(A)PYRENE	UG/KG	BNA	340	U	360	U	470	U			7200	U
BENZO(B)FLUORANTHENE	UG/KG	BNA	340	U	360	U	470	U			7200	U
BENZO(G,H,I)PERYLENE	UG/KG	BNA	340	U	360	U	470	U			7200	U
BENZO(K)FLUORANTHENE	UG/KG	BNA	340	U	360	U	470	U			7200	U
BENZOIC ACID	UG/KG	BNA	1600	U	1700	U	2300	U			35000	U
BENZYL ALCOHOL	UG/KG	BNA	340	U	360	U	470	U			7200	U
BIS(2-CHLOROETHOXY)METHANE	UG/KG	BNA	340	U	360	U	470	U			7200	U
BIS(2-CHLOROETHYL)ETHER	UG/KG	BNA	340	U	360	U	470	U			7200	U
BIS(2-CHLOROISOPROPYL)ETHER	UG/KG	BNA	340	U	360	U	470	U			7200	U
BIS(2-ETHYLHEXYL)PHTHALATE	UG/KG	BNA	340	U	360	U	470	U			7200	U
BUTYLBENZYLPHTHALATE	UG/KG	BNA	340	U	360	U	470	U			7200	U
CHRYSENE	UG/KG	BNA	340	U	360	U	470	U			7200	U
DI-N-BUTYLPHTHALATE	UG/KG	BNA	340	U	360	U	470	U			7200	U
DI-N-OCTYLPHTHALATE	UG/KG	BNA	340	U	360	U	470	U			7200	U
DIBENZ(A,H)ANTHRACENE	UG/KG	BNA	340	U	360	U	470	U			7200	U
DIBENZOFURAN	UG/KG	BNA	340	U	360	U	470	U			7200	U
DIETHYLPHTHALATE	UG/KG	BNA	340	U	360	U	470	U			91000	
DIMETHYLPHTHALATE	UG/KG	BNA	340	U	360	U	470	U			7200	U
FLUORANTHENE	UG/KG	BNA	340	U	360	U	470	U			7200	U
FLUORENE	UG/KG	BNA	340	U	360	U	470	U			7200	U

NAVSTA-SAN DIEGO
SITE 4 WATER

		SAMPLE NUMBER:	NS4-MW2-S01-5		NS4-MW2-S02-10		NS4-MW2-S03-15		NS4-MW3-GW1		NS4-MW3-S01-5	
		SAMPLING DATE:	01/28/91		01/28/91		01/28/91		02/12/91		01/28/91	
		BORING:	MW2		MW2		MW2		MW3		MW3	
		SITE:	NS4		NS4		NS4		NS4		NS4	
		DEPTH:	5		10		15		NS4-MW3-GW1		5	
COMPOUND NAME	UNITS	TEST CODE	RESULT	QUALIFIER	RESULT	QUALIFIER	RESULT	QUALIFIER	RESULT	QUALIFIER	RESULT	QUALIFIER
HEXACHLOROBENZENE	UG/KG	BNA	340	U	360	U	470	U			7200	U
HEXACHLOROBUTADIENE	UG/KG	BNA	340	U	360	U	470	U			7200	U
HEXACHLOROCYCLOPENTADIENE	UG/KG	BNA	340	U	360	U	470	U			7200	U
HEXACHLOROETHANE	UG/KG	BNA	340	U	360	U	470	U			7200	U
INDENO(1,2,3-C,D)PYRENE	UG/KG	BNA	340	U	360	U	470	U			7200	U
ISOPHORONE	UG/KG	BNA	340	U	360	U	470	U			7200	U
N-NITROSO-DI-N-PROPYLAMINE	UG/KG	BNA	340	U	360	U	470	U			7200	U
N-NITROSODIPHENYLAMINE (1)	UG/KG	BNA	340	U	360	U	470	U			7200	U
NAPHTHALENE	UG/KG	BNA	340	U	360	U	470	U			7200	U
NITROBENZENE	UG/KG	BNA	340	U	360	U	470	U			7200	U
PENTACHLOROPHENOL	UG/KG	BNA	1600	U	1700	U	2300	U			35000	U
PHENANTHRENE	UG/KG	BNA	340	U	360	U	470	U			7200	U
PHENOL	UG/KG	BNA	340	U	360	U	470	U			7200	U
PYRENE	UG/KG	BNA	340	U	360	U	470	U			7200	U
1,2,4-TRICHLOROBENZENE	UG/L	BNA							10	U		
1,2-DICHLOROBENZENE	UG/L	BNA							10	U		
1,3-DICHLOROBENZENE	UG/L	BNA							10	U		
1,4-DICHLOROBENZENE	UG/L	BNA							10	U		
2,4,5-TRICHLOROPHENOL	UG/L	BNA							50	U		
2,4,6-TRIBROMOPHENOL	UG/L	BNA							101			
2,4,6-TRICHLOROPHENOL	UG/L	BNA							10	U		
2,4-DICHLOROPHENOL	UG/L	BNA							10	U		
2,4-DIMETHYLPHENOL	UG/L	BNA							10	U		
2,4-DINITROPHENOL	UG/L	BNA							50	U		
2,4-DINITROTOLUENE	UG/L	BNA							10	U		
2,6-DINITROTOLUENE	UG/L	BNA							10	U		
2-CHLORONAPHTHALENE	UG/L	BNA							10	U		
2-CHLOROPHENOL	UG/L	BNA							10	U		
2-FLUOROBIPHENYL	UG/L	BNA							112			
2-FLUOROPHENOL	UG/L	BNA							118			
2-METHYLNAPHTHALENE	UG/L	BNA							10	U		
2-METHYLPHENOL	UG/L	BNA							10	U		
2-NITROANILINE	UG/L	BNA							50	U		
2-NITROPHENOL	UG/L	BNA							10	U		
3,3'-DICHLOROBENZIDINE	UG/L	BNA							20	U		
3-NITROANILINE	UG/L	BNA							50	U		
4,6-DINITRO-2-METHYLPHENOL	UG/L	BNA							50	U		
4-BROMOPHENYL-PHENYLETHER	UG/L	BNA							10	U		
4-CHLORO-3-METHYLPHENOL	UG/L	BNA							10	U		
4-CHLOROANILINE	UG/L	BNA							10	U		
4-CHLOROPHENYL-PHENYLETHER	UG/L	BNA							10	U		
4-METHYLPHENOL	UG/L	BNA							10	U		
4-NITROANILINE	UG/L	BNA							50	U		
4-NITROPHENOL	UG/L	BNA							50	U		
ACENAPHTHENE	UG/L	BNA							10	U		
ACENAPHTHYLENE	UG/L	BNA							10	U		
ANTHRACENE	UG/L	BNA							10	U		
BENZO(A)ANTHRACENE	UG/L	BNA							10	U		
BENZO(A)PYRENE	UG/L	BNA							83			
BENZO(B)FLUORANTHENE	UG/L	BNA							10	U		
BENZO(G,H,I)PERYLENE	UG/L	BNA							10	U		

NAVSTA-SAN DIEGO
SITE 4 WATER

		SAMPLE NUMBER:	NS4-MW2-S01-5		NS4-MW2-S02-10		NS4-MW2-S03-15		NS4-MW3-GW1		NS4-MW3-S01-5	
		SAMPLING DATE:	01/28/91		01/28/91		01/28/91		02/12/91		01/28/91	
		BORING:	MW2		MW2		MW2		MW3		MW3	
		SITE:	NS4		NS4		NS4		NS4		NS4	
		DEPTH:	5		10		15		NS4-MW3-GW1		5	
COMPOUND NAME	UNITS	TEST CODE	RESULT	QUALIFIER	RESULT	QUALIFIER	RESULT	QUALIFIER	RESULT	QUALIFIER	RESULT	QUALIFIER
BENZO(K)FLUORANTHENE	UG/L	BNA							10	U		
BENZOIC ACID	UG/L	BNA							50	U		
BENZYL ALCOHOL	UG/L	BNA							10	U		
BIS(2-CHLOROETHOXY)METHANE	UG/L	BNA							10	U		
BIS(2-CHLOROETHYL)ETHER	UG/L	BNA							10	U		
BIS(2-CHLOROISOPROPYL)ETHER	UG/L	BNA							10	U		
BIS(2-ETHYLHEXYL)PHTHALATE	UG/L	BNA							10	U		
BUTYLBENZYLPHTHALATE	UG/L	BNA							10	U		
CHRYSENE	UG/L	BNA							10	U		
DI-N-BUTYLPHTHALATE	UG/L	BNA							10	U		
DI-N-OCTYLPHTHALATE	UG/L	BNA							10	U		
DIBENZ(A,H)ANTHRACENE	UG/L	BNA							10	U		
DIBENZO(A,H)ANTHRACENE	UG/L	BNA										
DIBENZOFURAN	UG/L	BNA							10	U		
DIETHYLPHTHALATE	UG/L	BNA							10	U		
DIMETHYLPHTHALATE	UG/L	BNA							10	U		
FLUORANTHENE	UG/L	BNA							10	U		
FLUORENE	UG/L	BNA							10	U		
HEXACHLOROBENZENE	UG/L	BNA							10	U		
HEXACHLOROBUTADIENE	UG/L	BNA							10	U		
HEXACHLOROCYCLOPENTADIENE	UG/L	BNA							10	U		
HEXACHLOROETHANE	UG/L	BNA							10	U		
INDENO(1,2,3-C,D)PYRENE	UG/L	BNA							10	U		
ISOPHORONE	UG/L	BNA							10	U		
N-NITROSO-DI-N-PROPYLAMINE	UG/L	BNA							10	U		
N-NITROSODIPHENYLAMINE (1)	UG/L	BNA							10	U		
NAPHTHALENE	UG/L	BNA							10	U		
NITROBENZENE	UG/L	BNA							10	U		
NITROBENZENE-D5	UG/L	BNA							122			
PENTACHLOROPHENOL	UG/L	BNA							50	U		
PHENANTHRENE	UG/L	BNA							10	U		
PHENOL	UG/L	BNA							10	U		
PHENOL-D5	UG/L	BNA							122			
PYRENE	UG/L	BNA							10	U		
TERPHENYL-D14	UG/L	BNA							96			
ANTIMONY	MG/KG	CAC METALS	3.7	U	3.9	U	5.0	U			3.9	UJ
ARSENIC	MG/KG	CAC METALS	1.4	B	1.6	B	2.2	B			0.86	BJ
BARIUM	MG/KG	CAC METALS	26.8	B	7.9	U	45.2	B			52.3	
BERYLLIUM	MG/KG	CAC METALS	0.67	B	0.33	B	2.7				2.0	
CADMIUM	MG/KG	CAC METALS	0.79	U	0.81	U	1.1	U			0.82	U
CHROMIUM	MG/KG	CAC METALS	4.3		2.4		15.9				9.9	
COBALT	MG/KG	CAC METALS	2.2	B	1.0	U	5.4	B			5.4	B
COPPER	MG/KG	CAC METALS	22.4	U	11.5	U	19.2	U			37.0	U
LEAD	MG/KG	CAC METALS	19.3		1.0	U	3.2	U			131	
MERCURY	MG/KG	CAC METALS	0.31		0.16	U	0.21	U			0.16	
MOLYBDENUM	MG/KG	CAC METALS	1.9	B	1.4	U	2.2	B			1.4	U
NICKEL	MG/KG	CAC METALS	2.2	B	1.8	U	3.3	B			5.6	B
SELENIUM	MG/KG	CAC METALS	0.39	U	0.42	U	0.55	U			0.41	U
SILVER	MG/KG	CAC METALS	1.0	U	0.61	U	1.7	U			1.4	U
THALLIUM	MG/KG	CAC METALS	0.39	U	0.42	U	0.55	U			0.41	U
VANADIUM	MG/KG	CAC METALS	16.6		5.0	B	35.9				40.1	

NAVSTA-SAN DIEGO
SITE 4 WATER

		SAMPLE NUMBER:	NS4-MW2-S01-5		NS4-MW2-S02-10		NS4-MW2-S03-15		NS4-MW3-GW1		NS4-MW3-S01-5	
		SAMPLING DATE:	01/28/91		01/28/91		01/28/91		02/12/91		01/28/91	
		BORING:	MW2		MW2		MW2		MW3		MW3	
		SITE:	NS4		NS4		NS4		NS4		NS4	
		DEPTH:	5		10		15		NS4-MW3-GW1		5	
COMPOUND NAME	UNITS	TEST CODE	RESULT	QUALIFIER	RESULT	QUALIFIER	RESULT	QUALIFIER	RESULT	QUALIFIER	RESULT	QUALIFIER
ZINC	MG/KG	CAC METALS	33.3	U	5.9	U	32.6	U			58.9	U
ANTIMONY	UG/KG	CAC METALS										
ARSENIC	UG/KG	CAC METALS										
BARIUM	UG/KG	CAC METALS										
BERYLLIUM	UG/KG	CAC METALS										
CADMIUM	UG/KG	CAC METALS										
CHROMIUM	UG/KG	CAC METALS										
COBALT	UG/KG	CAC METALS										
COPPER	UG/KG	CAC METALS										
LEAD	UG/KG	CAC METALS										
MERCURY	UG/KG	CAC METALS										
MOLYBDENUM	UG/KG	CAC METALS										
NICKEL	UG/KG	CAC METALS										
SELENIUM	UG/KG	CAC METALS										
SILVER	UG/KG	CAC METALS										
THALLIUM	UG/KG	CAC METALS										
VANADIUM	UG/KG	CAC METALS										
ZINC	UG/KG	CAC METALS										
ANTIMONY	UG/L	CAC METALS							19.0	U		
ARSENIC	UG/L	CAC METALS							20.0	U		
BARIUM	UG/L	CAC METALS							74.9	B		
BERYLLIUM	UG/L	CAC METALS							1.0	U		
CADMIUM	UG/L	CAC METALS							4.0	U		
CHROMIUM	UG/L	CAC METALS							4.0	U		
COBALT	UG/L	CAC METALS							5.0	U		
COPPER	UG/L	CAC METALS							30.0	U		
LEAD	UG/L	CAC METALS							10.0	U		
MERCURY	UG/L	CAC METALS							0.20	U		
MOLYBDENUM	UG/L	CAC METALS							7.0	U		
NICKEL	UG/L	CAC METALS							9.0	U		
SELENIUM	UG/L	CAC METALS							10.0	U		
SILVER	UG/L	CAC METALS							3.0	U		
THALLIUM	UG/L	CAC METALS							11.0	B		
VANADIUM	UG/L	CAC METALS							25.0	U		
ZINC	UG/L	CAC METALS							94.2	U		
CAC WET EXTRACTION	DATE	CAC WET EX										
COPPER	MG/L	CAC WET EX										
LEAD	MG/L	CAC WET EX										
TOTAL CYANIDE	MG/KG	CN	1	U	1	U	1	U			1	U
TOTAL CYANIDE	MG/L	CN										
4,4'-DDD	UG/KG	PEST / PCB	16	U	17	U	23	U			35	UJ
4,4'-DDE	UG/KG	PEST / PCB	16	U	17	U	23	U			25	J
4,4'-DDT	UG/KG	PEST / PCB	16	U	17	U	23	U			71	J
ALDRIN	UG/KG	PEST / PCB	8.2	U	8.7	U	11	U			17	UJ
ALPHA-BHC	UG/KG	PEST / PCB	8.2	U	8.7	U	11	U			17	UJ
ALPHA-CHLORDANE	UG/KG	PEST / PCB	82	U	87	U	110	U			170	UJ
BETA-BHC	UG/KG	PEST / PCB	8.2	U	8.7	U	11	U			17	UJ
DELTA-BHC	UG/KG	PEST / PCB	8.2	U	8.7	U	11	U			17	UJ
DIBUTYL CHLORENDATE	UG/KG	PEST / PCB	101		90		45				107	
DIELDRIN	UG/KG	PEST / PCB	16	U	17	U	23	U			35	UJ
ENDOSULFAN I	UG/KG	PEST / PCB	8.2	U	8.7	U	11	U			17	UJ

NAVSTA-SAN DIEGO
SITE 4 WATER

		SAMPLE NUMBER:	NS4-MW2-S01-5		NS4-MW2-S02-10		NS4-MW2-S03-15		NS4-MW3-GW1		NS4-MW3-S01-5	
		SAMPLING DATE:	01/28/91		01/28/91		01/28/91		02/12/91		01/28/91	
		BORING:	MW2		MW2		MW2		MW3		MW3	
		SITE:	NS4		NS4		NS4		NS4		NS4	
		DEPTH:	5		10		15		NS4-MW3-GW1		5	
COMPOUND NAME	UNITS	TEST CODE	RESULT	QUALIFIER	RESULT	QUALIFIER	RESULT	QUALIFIER	RESULT	QUALIFIER	RESULT	QUALIFIER
ENDOSULFAN II	UG/KG	PEST / PCB	16	U	17	U	23	U			35	UJ
ENDOSULFAN SULFATE	UG/KG	PEST / PCB	16	U	17	U	23	U			35	UJ
ENDRIN	UG/KG	PEST / PCB	16	U	17	U	23	U			35	UJ
ENDRIN KETONE	UG/KG	PEST / PCB	16	U	17	U	23	U			35	UJ
GAMMA-BHC (LINDANE)	UG/KG	PEST / PCB	8.2	U	8.7	U	11	U			17	UJ
GAMMA-CHLORDANE	UG/KG	PEST / PCB	82	U	87	U	110	U			170	UJ
HEPTACHLOR	UG/KG	PEST / PCB	8.2	U	8.7	U	11	U			17	UJ
HEPTACHLOR EPOXIDE	UG/KG	PEST / PCB	8.2	U	8.7	U	11	U			17	UJ
METHOXYCHLOR	UG/KG	PEST / PCB	82	U	87	U	110	U			170	UJ
PCB-1016	UG/KG	PEST / PCB	82	U	87	U	110	U			170	UJ
PCB-1221	UG/KG	PEST / PCB	82	U	87	U	110	U			170	UJ
PCB-1232	UG/KG	PEST / PCB	82	U	87	U	110	U			170	UJ
PCB-1242	UG/KG	PEST / PCB	82	U	87	U	110	U			170	UJ
PCB-1248	UG/KG	PEST / PCB	82	U	87	U	110	U			170	UJ
PCB-1254	UG/KG	PEST / PCB	160	U	170	U	230	U			350	UJ
PCB-1260	UG/KG	PEST / PCB	160	U	170	U	230	U			350	UJ
TOXAPHENE	UG/KG	PEST / PCB	160	U	170	U	230	U			350	UJ
4,4'-DDD	UG/L	PEST / PCB							0.1	U		
4,4'-DDE	UG/L	PEST / PCB							0.1	U		
4,4'-DDT	UG/L	PEST / PCB							0.1	U		
ALDRIN	UG/L	PEST / PCB							0.05	U		
ALPHA-BHC	UG/L	PEST / PCB							0.05	U		
ALPHA-CHLORDANE	UG/L	PEST / PCB							0.5	U		
BETA-BHC	UG/L	PEST / PCB							0.05	U		
DELTA-BHC	UG/L	PEST / PCB							0.05	U		
DIBUTYL CHLORENDATE	UG/L	PEST / PCB							54			
DIELDRIN	UG/L	PEST / PCB							0.1	U		
ENDOSULFAN I	UG/L	PEST / PCB							0.05	U		
ENDOSULFAN II	UG/L	PEST / PCB							0.1	U		
ENDOSULFAN SULFATE	UG/L	PEST / PCB							0.1	U		
ENDRIN	UG/L	PEST / PCB							0.1	U		
ENDRIN KETONE	UG/L	PEST / PCB							0.1	U		
GAMMA-BHC (LINDANE)	UG/L	PEST / PCB							0.05	U		
GAMMA-CHLORDANE	UG/L	PEST / PCB							0.5	U		
HEPTACHLOR	UG/L	PEST / PCB							0.05	U		
HEPTACHLOR EPOXIDE	UG/L	PEST / PCB							0.05	U		
METHOXYCHLOR	UG/L	PEST / PCB							0.5	U		
PCB-1016	UG/L	PEST / PCB							0.5	U		
PCB-1221	UG/L	PEST / PCB							0.5	U		
PCB-1232	UG/L	PEST / PCB							0.5	U		
PCB-1242	UG/L	PEST / PCB							0.5	U		
PCB-1248	UG/L	PEST / PCB							0.5	U		
PCB-1254	UG/L	PEST / PCB							1	U		
PCB-1260	UG/L	PEST / PCB							1	U		
TOXAPHENE	UG/L	PEST / PCB							1	U		
DIESEL	MG/KG	TPHC										
JP4	MG/KG	TPHC										
JP5	MG/KG	TPHC										
STODDARD	MG/KG	TPHC	10	U	10	U	10	U			50	U
DIESEL	UG/KG	TPHC										
JP4	UG/KG	TPHC										

NAVSTA-SAN DIEGO
SITE 4 WATER

		SAMPLE NUMBER:	NS4-MW2-S01-5		NS4-MW2-S02-10		NS4-MW2-S03-15		NS4-MW3-GW1		NS4-MW3-S01-5	
		SAMPLING DATE:	01/28/91		01/28/91		01/28/91		02/12/91		01/28/91	
		BORING:	MW2		MW2		MW2		MW3		MW3	
		SITE:	NS4		NS4		NS4		NS4		NS4	
		DEPTH:	5		10		15		NS4-MW3-GW1		5	
COMPOUND NAME	UNITS	TEST CODE	RESULT	QUALIFIER	RESULT	QUALIFIER	RESULT	QUALIFIER	RESULT	QUALIFIER	RESULT	QUALIFIER
JP5	UG/KG	TPHC										
STODDARD	UG/KG	TPHC										
BENZO(A)PYRENE	UG/L	TPHC							83			
STODDARD	UG/L	TPHC							250	U		
1,1,1-TRICHLOROETHANE	UG/KG	VOA	5	U	5	U	7	U			5	U
1,1,2,2-TETRACHLOROETHANE	UG/KG	VOA	5	U	5	U	7	U			5	U
1,1,2-TRICHLOROETHANE	UG/KG	VOA	5	U	5	U	7	U			5	U
1,1-DICHLOROETHANE	UG/KG	VOA	5	U	5	U	7	U			5	U
1,1-DICHLOROETHENE	UG/KG	VOA	5	U	5	U	7	U			5	U
1,2-DICHLOROETHANE	UG/KG	VOA	5	U	5	U	7	U			5	U
1,2-DICHLOROETHENE (TOTAL)	UG/KG	VOA	5	U	5	U	7	U			5	U
1,2-DICHLOROPROPANE	UG/KG	VOA	5	U	5	U	7	U			5	U
2-BUTANONE	UG/KG	VOA	10	U	11	U	14	U			11	U
2-HEXANONE	UG/KG	VOA	10	U	11	U	14	U			11	U
4-METHYL-2-PENTANONE	UG/KG	VOA	10	U	11	U	14	U			11	U
ACETONE	UG/KG	VOA	11	U	11	U	45	U			13	U
BENZENE	UG/KG	VOA	5	U	5	U	7	U			5	U
BROMODICHLOROMETHANE	UG/KG	VOA	5	U	5	U	7	U			5	U
BROMOFORM	UG/KG	VOA	5	U	5	U	7	U			5	U
BROMOMETHANE	UG/KG	VOA	10	U	11	U	14	U			11	U
CARBON DISULFIDE	UG/KG	VOA	5	U	5	U	55				5	U
CARBON TETRACHLORIDE	UG/KG	VOA	5	U	5	U	7	U			5	U
CHLOROBENZENE	UG/KG	VOA	5	U	5	U	7	U			5	U
CHLOROETHANE	UG/KG	VOA	10	U	11	U	14	U			11	U
CHLOROFORM	UG/KG	VOA	5	U	5	U	7	U			5	U
CHLOROMETHANE	UG/KG	VOA	10	U	11	U	14	U			11	U
CIS-1,3-DICHLOROPROPENE	UG/KG	VOA	5	U	5	U	7	U			5	U
DIBROMOCHLOROMETHANE	UG/KG	VOA	5	U	5	U	7	U			5	U
ETHYLBENZENE	UG/KG	VOA	5	U	5	U	7	U			5	U
METHYLENE CHLORIDE	UG/KG	VOA	25	U	14	U	11	U			27	U
STYRENE	UG/KG	VOA	5	U	5	U	7	U			5	U
TETRACHLOROETHENE	UG/KG	VOA	5	U	5	U	7	U			5	U
TOLUENE	UG/KG	VOA	3	J	5	U	7	U			5	U
TRANS-1,3-DICHLOROPROPENE	UG/KG	VOA	5	U	5	U	7	U			5	U
TRICHLOROETHENE	UG/KG	VOA	5	U	5	U	7	U			5	U
VINYL ACETATE	UG/KG	VOA	10	U	11	U	14	U			11	U
VINYL CHLORIDE	UG/KG	VOA	10	U	11	U	14	U			11	U
XYLENES (TOTAL)	UG/KG	VOA	3	J	5	U	7	U			5	U
1,1,1-TRICHLOROETHANE	UG/L	VOA							5	U		
1,1,2,2-TETRACHLOROETHANE	UG/L	VOA							5	U		
1,1,2-TRICHLOROETHANE	UG/L	VOA							5	U		
1,1-DICHLOROETHANE	UG/L	VOA							5	U		
1,1-DICHLOROETHENE	UG/L	VOA							5	U		
1,2-DICHLOROETHANE	UG/L	VOA							5	U		
1,2-DICHLOROETHANE-D4	UG/L	VOA							106			
1,2-DICHLOROETHENE (TOTAL)	UG/L	VOA							5	U		
1,2-DICHLOROPROPANE	UG/L	VOA							5	U		
2-BUTANONE	UG/L	VOA							10	U		
2-HEXANONE	UG/L	VOA							10	U		
4-METHYL-2-PENTANONE	UG/L	VOA							10	U		
ACETONE	UG/L	VOA							10	U		

NAVSTA-SAN DIEGO
SITE 4 WATER

		SAMPLE NUMBER:	NS4-MW2-S01-5		NS4-MW2-S02-10		NS4-MW2-S03-15		NS4-MW3-GW1		NS4-MW3-S01-5	
		SAMPLING DATE:	01/28/91		01/28/91		01/28/91		02/12/91		01/28/91	
		BORING:	MW2		MW2		MW2		MW3		MW3	
		SITE:	NS4		NS4		NS4		NS4		NS4	
		DEPTH:	5		10		15		NS4-MW3-GW1		5	
COMPOUND NAME	UNITS	TEST CODE	RESULT	QUALIFIER	RESULT	QUALIFIER	RESULT	QUALIFIER	RESULT	QUALIFIER	RESULT	QUALIFIER
BENZENE	UG/L	VOA							5	U		
BROMODICHLOROMETHANE	UG/L	VOA							5	U		
BROMOFLUOROBENZENE	UG/L	VOA							106			
BROMOFORM	UG/L	VOA							5	U		
BROMOMETHANE	UG/L	VOA							10	U		
CARBON DISULFIDE	UG/L	VOA							5			
CARBON TETRACHLORIDE	UG/L	VOA							5	U		
CHLOROBENZENE	UG/L	VOA							5	U		
CHLOROETHANE	UG/L	VOA							10	U		
CHLOROFORM	UG/L	VOA							5	U		
CHLOROMETHANE	UG/L	VOA							10	U		
CIS-1,3-DICHLOROPROPENE	UG/L	VOA							5	U		
DIBROMOCHLOROMETHANE	UG/L	VOA							5	U		
ETHYLBENZENE	UG/L	VOA							5	U		
METHYLENE CHLORIDE	UG/L	VOA							5	U		
STYRENE	UG/L	VOA							5	U		
TETRACHLOROETHENE	UG/L	VOA							5	U		
TOLUENE	UG/L	VOA							5	U		
TOLUENE-D8	UG/L	VOA							99			
TRANS-1,3-DICHLOROPROPENE	UG/L	VOA							5	U		
TRICHLOROETHENE	UG/L	VOA							5	U		
VINYL ACETATE	UG/L	VOA							10	U		
VINYL CHLORIDE	UG/L	VOA							10	U		
XYLENES (TOTAL)	UG/L	VOA							5	U		

NAVSTA-SAN DIEGO
SITE 4 WATER

		SAMPLE NUMBER:	NS4-MW3-S02-10		NS4-MW3-S02-10-FD		NS4-MW3-S02-15		NS4-MW4-GW1		NS4-MW4-GW2-FD	
		SAMPLING DATE:	01/28/91		01/28/91		01/28/91		02/11/91		02/11/91	
		BORING:	MW3		MW3		MW3		MW4		MW4	
		SITE:	NS4		NS4		NS4		NS4		NS4	
		DEPTH:	10		10-FD		15		NS4-MW4-GW1		FD	
COMPOUND NAME	UNITS	TEST CODE	RESULT	QUALIFIER	RESULT	QUALIFIER	RESULT	QUALIFIER	RESULT	QUALIFIER	RESULT	QUALIFIER
1,2,4-TRICHLOROBENZENE	UG/KG	BNA	400	U	400	U						
1,2-DICHLOROBENZENE	UG/KG	BNA	400	U	400	U						
1,3-DICHLOROBENZENE	UG/KG	BNA	400	U	400	U						
1,4-DICHLOROBENZENE	UG/KG	BNA	400	U	400	U						
2,4,5-TRICHLOROPHENOL	UG/KG	BNA	1900	U	1900	U						
2,4,6-TRICHLOROPHENOL	UG/KG	BNA	400	U	400	U						
2,4-DICHLOROPHENOL	UG/KG	BNA	400	U	400	U						
2,4-DIMETHYLPHENOL	UG/KG	BNA	400	U	400	U						
2,4-DINITROPHENOL	UG/KG	BNA	1900	U	1900	U						
2,4-DINITROTOLUENE	UG/KG	BNA	400	U	400	U						
2,6-DINITROTOLUENE	UG/KG	BNA	400	U	400	U						
2-CHLORONAPHTHALENE	UG/KG	BNA	400	U	400	U						
2-CHLOROPHENOL	UG/KG	BNA	400	U	400	U						
2-METHYLNAPHTHALENE	UG/KG	BNA	400	U	400	U						
2-METHYLPHENOL	UG/KG	BNA	400	U	400	U						
2-NITROANILINE	UG/KG	BNA	1900	U	1900	U						
2-NITROPHENOL	UG/KG	BNA	400	U	400	U						
3,3'-DICHLOROBENZIDINE	UG/KG	BNA	800	U	800	U						
3-NITROANILINE	UG/KG	BNA	1900	U	1900	U						
4,6-DINITRO-2-METHYLPHENOL	UG/KG	BNA	1900	U	1900	U						
4-BROMOPHENYL-PHENYLETHER	UG/KG	BNA	400	U	400	U						
4-CHLORO-3-METHYLPHENOL	UG/KG	BNA	400	U	400	U						
4-CHLOROANILINE	UG/KG	BNA	400	U	400	U						
4-CHLOROPHENYL-PHENYLETHER	UG/KG	BNA	400	U	400	U						
4-METHYLPHENOL	UG/KG	BNA	400	U	400	U						
4-NITROANILINE	UG/KG	BNA	1900	U	1900	U						
4-NITROPHENOL	UG/KG	BNA	1900	U	1900	U						
ACENAPHTHENE	UG/KG	BNA	400	U	400	U						
ACENAPHTHYLENE	UG/KG	BNA	400	U	400	U						
ANTHRACENE	UG/KG	BNA	400	U	400	U						
BENZO(A)ANTHRACENE	UG/KG	BNA	400	U	400	U						
BENZO(A)PYRENE	UG/KG	BNA	400	U	400	U						
BENZO(B)FLUORANTHENE	UG/KG	BNA	400	U	400	U						
BENZO(G,H,I)PERYLENE	UG/KG	BNA	400	U	400	U						
BENZO(K)FLUORANTHENE	UG/KG	BNA	400	U	400	U						
BENZOIC ACID	UG/KG	BNA	1900	U	1900	U						
BENZYL ALCOHOL	UG/KG	BNA	400	U	400	U						
BIS(2-CHLOROETHOXY)METHANE	UG/KG	BNA	400	U	400	U						
BIS(2-CHLOROETHYL)ETHER	UG/KG	BNA	400	U	400	U						
BIS(2-CHLOROISOPROPYL)ETHER	UG/KG	BNA	400	U	400	U						
BIS(2-ETHYLHEXYL)PHTHALATE	UG/KG	BNA	400	U	400	U						
BUTYLBENZYLPHTHALATE	UG/KG	BNA	400	U	400	U						
CHRYSENE	UG/KG	BNA	400	U	400	U						
DI-N-BUTYLPHTHALATE	UG/KG	BNA	400	U	400	U						
DI-N-OCTYLPHTHALATE	UG/KG	BNA	400	U	400	U						
DIBENZ(A,H)ANTHRACENE	UG/KG	BNA	400	U	400	U						
DIBENZOFURAN	UG/KG	BNA	400	U	400	U						
DIETHYLPHTHALATE	UG/KG	BNA	400	U	400	U						
DIMETHYLPHTHALATE	UG/KG	BNA	400	U	400	U						
FLUORANTHENE	UG/KG	BNA	400	U	400	U						
FLUORENE	UG/KG	BNA	400	U	400	U						

NAVSTA-SAN DIEGO
SITE 4 WATER

		SAMPLE NUMBER:	NS4-MW3-S02-10		NS4-MW3-S02-10-FD		NS4-MW3-S02-15		NS4-MW4-GW1		NS4-MW4-GW2-FD	
		SAMPLING DATE:	01/28/91		01/28/91		01/28/91		02/11/91		02/11/91	
		BORING:	MW3		MW3		MW3		MW4		MW4	
		SITE:	NS4		NS4		NS4		NS4		NS4	
		DEPTH:	10		10-FD		15		NS4-MW4-GW1		FD	
COMPOUND NAME	UNITS	TEST CODE	RESULT	QUALIFIER	RESULT	QUALIFIER	RESULT	QUALIFIER	RESULT	QUALIFIER	RESULT	QUALIFIER
HEXACHLOROBENZENE	UG/KG	BNA	400	U	400	U						
HEXACHLOROBUTADIENE	UG/KG	BNA	400	U	400	U						
HEXACHLOROCYCLOPENTADIENE	UG/KG	BNA	400	U	400	U						
HEXACHLOROETHANE	UG/KG	BNA	400	U	400	U						
INDENO(1,2,3-C,D)PYRENE	UG/KG	BNA	400	U	400	U						
ISOPHORONE	UG/KG	BNA	400	U	400	U						
N-NITROSO-DI-N-PROPYLAMINE	UG/KG	BNA	400	U	400	U						
N-NITROSODIPHENYLAMINE (1)	UG/KG	BNA	400	U	400	U						
NAPHTHALENE	UG/KG	BNA	400	U	400	U						
NITROBENZENE	UG/KG	BNA	400	U	400	U						
PENTACHLOROPHENOL	UG/KG	BNA	1900	U	1900	U						
PHENANTHRENE	UG/KG	BNA	400	U	400	U						
PHENOL	UG/KG	BNA	400	U	400	U						
PYRENE	UG/KG	BNA	400	U	400	U						
1,2,4-TRICHLOROBENZENE	UG/L	BNA							10	U	10	U
1,2-DICHLOROBENZENE	UG/L	BNA							10	U	10	U
1,3-DICHLOROBENZENE	UG/L	BNA							10	U	10	U
1,4-DICHLOROBENZENE	UG/L	BNA							10	U	10	U
2,4,5-TRICHLOROPHENOL	UG/L	BNA							50	U	50	U
2,4,6-TRIBROMOPHENOL	UG/L	BNA							73		37	
2,4,6-TRICHLOROPHENOL	UG/L	BNA							10	U	10	U
2,4-DICHLOROPHENOL	UG/L	BNA							10	U	10	U
2,4-DIMETHYLPHENOL	UG/L	BNA							10	U	10	U
2,4-DINITROPHENOL	UG/L	BNA							50	U	50	U
2,4-DINITROTOLUENE	UG/L	BNA							10	U	10	U
2,6-DINITROTOLUENE	UG/L	BNA							10	U	10	U
2-CHLORONAPHTHALENE	UG/L	BNA							10	U	10	U
2-CHLOROPHENOL	UG/L	BNA							10	U	10	U
2-FLUOROBIPHENYL	UG/L	BNA							83		84	
2-FLUOROPHENOL	UG/L	BNA							74		37	
2-METHYLNAPHTHALENE	UG/L	BNA							10	U	10	U
2-METHYLPHENOL	UG/L	BNA							10	U	10	U
2-NITROANILINE	UG/L	BNA							50	U	50	U
2-NITROPHENOL	UG/L	BNA							10	U	10	U
3,3'-DICHLOROBENZIDINE	UG/L	BNA							20	U	20	U
3-NITROANILINE	UG/L	BNA							50	U	50	U
4,6-DINITRO-2-METHYLPHENOL	UG/L	BNA							50	U	50	U
4-BROMOPHENYL-PHENYLETHER	UG/L	BNA							10	U	10	U
4-CHLORO-3-METHYLPHENOL	UG/L	BNA							10	U	10	U
4-CHLOROANILINE	UG/L	BNA							10	U	10	U
4-CHLOROPHENYL-PHENYLETHER	UG/L	BNA							10	U	10	U
4-METHYLPHENOL	UG/L	BNA							10	U	10	U
4-NITROANILINE	UG/L	BNA							50	U	50	U
4-NITROPHENOL	UG/L	BNA							50	U	50	U
ACENAPHTHENE	UG/L	BNA							10	U	10	U
ACENAPHTHYLENE	UG/L	BNA							10	U	10	U
ANTHRACENE	UG/L	BNA							10	U	10	U
BENZO(A)ANTHRACENE	UG/L	BNA							10	U	10	U
BENZO(A)PYRENE	UG/L	BNA							64		4	
BENZO(B)FLUORANTHENE	UG/L	BNA							10	U	10	U
BENZO(G,H,I)PERYLENE	UG/L	BNA							10	U	10	U

NAVSTA-SAN DIEGO
SITE 4 WATER

		SAMPLE NUMBER:	NS4-MW3-S02-10		NS4-MW3-S02-10-FD		NS4-MW3-S02-15		NS4-MW4-GW1		NS4-MW4-GW2-FD	
		SAMPLING DATE:	01/28/91		01/28/91		01/28/91		02/11/91		02/11/91	
		BORING:	MW3		MW3		MW3		MW4		MW4	
		SITE:	NS4		NS4		NS4		NS4		NS4	
		DEPTH:	10		10-FD		15		NS4-MW4-GW1		FD	
COMPOUND NAME	UNITS	TEST CODE	RESULT	QUALIFIER	RESULT	QUALIFIER	RESULT	QUALIFIER	RESULT	QUALIFIER	RESULT	QUALIFIER
BENZO(K)FLUORANTHENE	UG/L	BNA							10	U	10	U
BENZOIC ACID	UG/L	BNA							50	U	50	U
BENZYL ALCOHOL	UG/L	BNA							10	U	10	U
BIS(2-CHLOROETHOXY)METHANE	UG/L	BNA							10	U	10	U
BIS(2-CHLOROETHYL)ETHER	UG/L	BNA							10	U	10	U
BIS(2-CHLOROISOPROPYL)ETHER	UG/L	BNA							10	U	10	U
BIS(2-ETHYLHEXYL)PHTHALATE	UG/L	BNA							10	U	10	U
BUTYLBENZYLPHTHALATE	UG/L	BNA							10	U	10	U
CHRYSENE	UG/L	BNA							10	U	10	U
DI-N-BUTYLPHTHALATE	UG/L	BNA							10	U	10	U
DI-N-OCTYLPHTHALATE	UG/L	BNA							10	U	10	U
DIBENZ(A,H)ANTHRACENE	UG/L	BNA							10	U		
DIBENZO(A,H)ANTHRACENE	UG/L	BNA									10	U
DIBENZOFURAN	UG/L	BNA							10	U	10	U
DIETHYLPHTHALATE	UG/L	BNA							10	U	10	U
DIMETHYLPHTHALATE	UG/L	BNA							10	U	10	U
FLUORANTHENE	UG/L	BNA							10	U	10	U
FLUORENE	UG/L	BNA							10	U	10	U
HEXACHLOROBENZENE	UG/L	BNA							10	U	10	U
HEXACHLOROBUTADIENE	UG/L	BNA							10	U	10	U
HEXACHLOROCYCLOPENTADIENE	UG/L	BNA							10	U	10	U
HEXACHLOROETHANE	UG/L	BNA							10	U	10	U
INDENO(1,2,3-C,D)PYRENE	UG/L	BNA							10	U	10	U
ISOPHORONE	UG/L	BNA							10	U	10	U
N-NITROSO-DI-N-PROPYLAMINE	UG/L	BNA							10	U	10	U
N-NITROSODIPHENYLAMINE (1)	UG/L	BNA							10	U	10	U
NAPHTHALENE	UG/L	BNA							10	U	10	U
NITROBENZENE	UG/L	BNA							10	U	10	U
NITROBENZENE-D5	UG/L	BNA							85		82	
PENTACHLOROPHENOL	UG/L	BNA							50	U	50	U
PHENANTHRENE	UG/L	BNA							10	U	10	U
PHENOL	UG/L	BNA							10	U		
PHENOL-D5	UG/L	BNA							75		56	
PYRENE	UG/L	BNA							10	U	10	U
TERPHENYL-D14	UG/L	BNA							89		94	
ANTIMONY	MG/KG	CAC METALS	4.6	U	4.2	U						
ARSENIC	MG/KG	CAC METALS	16.6		1.8	B						
BARIUM	MG/KG	CAC METALS	76.0		16.1	B						
BERYLLIUM	MG/KG	CAC METALS	2.0		0.68	B						
CADMIUM	MG/KG	CAC METALS	0.96	U	0.89	U						
CHROMIUM	MG/KG	CAC METALS	4.2		4.2							
COBALT	MG/KG	CAC METALS	6.2	B	1.1	U						
COPPER	MG/KG	CAC METALS	136		9.6	U						
LEAD	MG/KG	CAC METALS	1250		20.7							
MERCURY	MG/KG	CAC METALS	0.78		0.18	U						
MOLYBDENUM	MG/KG	CAC METALS	2.4	B	1.6	U						
NICKEL	MG/KG	CAC METALS	2.2	U	2.0	U						
SELENIUM	MG/KG	CAC METALS	0.46	U	0.47	B						
SILVER	MG/KG	CAC METALS	1.8	U	1.1	U						
THALLIUM	MG/KG	CAC METALS	0.46	U	0.47	U						
VANADIUM	MG/KG	CAC METALS	16.8		12.6							

NAVSTA-SAN DIEGO
SITE 4 WATER

		SAMPLE NUMBER:	NS4-MW3-S02-10		NS4-MW3-S02-10-FD		NS4-MW3-S02-15		NS4-MW4-GW1		NS4-MW4-GW2-FD	
		SAMPLING DATE:	01/28/91		01/28/91		01/28/91		02/11/91		02/11/91	
		BORING:	MW3		MW3		MW3		MW4		MW4	
		SITE:	NS4		NS4		NS4		NS4		NS4	
		DEPTH:	10		10-FD		15		NS4-MW4-GW1		FD	
COMPOUND NAME	UNITS	TEST CODE	RESULT	QUALIFIER	RESULT	QUALIFIER	RESULT	QUALIFIER	RESULT	QUALIFIER	RESULT	QUALIFIER
ZINC	MG/KG	CAC METALS	166	U	16.2	U						
ANTIMONY	UG/KG	CAC METALS										
ARSENIC	UG/KG	CAC METALS										
BARIUM	UG/KG	CAC METALS										
BERYLLIUM	UG/KG	CAC METALS										
CADMIUM	UG/KG	CAC METALS										
CHROMIUM	UG/KG	CAC METALS										
COBALT	UG/KG	CAC METALS										
COPPER	UG/KG	CAC METALS										
LEAD	UG/KG	CAC METALS										
MERCURY	UG/KG	CAC METALS										
MOLYBDENUM	UG/KG	CAC METALS										
NICKEL	UG/KG	CAC METALS										
SELENIUM	UG/KG	CAC METALS										
SILVER	UG/KG	CAC METALS										
THALLIUM	UG/KG	CAC METALS										
VANADIUM	UG/KG	CAC METALS										
ZINC	UG/KG	CAC METALS										
ANTIMONY	UG/L	CAC METALS							19.0	U	41.0	B
ARSENIC	UG/L	CAC METALS							2.0	B	2.0	U
BARIUM	UG/L	CAC METALS							98.0	B	91.9	B
BERYLLIUM	UG/L	CAC METALS							1.0	U	1.0	U
CADMIUM	UG/L	CAC METALS							4.0	U	4.0	U
CHROMIUM	UG/L	CAC METALS							4.0	U	4.0	U
COBALT	UG/L	CAC METALS							5.3	B	5.0	U
COPPER	UG/L	CAC METALS							6.0	U	11.7	U
LEAD	UG/L	CAC METALS							1.0	U	1.0	U
MERCURY	UG/L	CAC METALS							0.20	U	0.20	U
MOLYBDENUM	UG/L	CAC METALS							60.6	B	53.1	B
NICKEL	UG/L	CAC METALS							9.0	U	9.0	U
SELENIUM	UG/L	CAC METALS							1.0	U	1.0	U
SILVER	UG/L	CAC METALS							4.6	B	6.0	B
THALLIUM	UG/L	CAC METALS							12.0	B	10.0	U
VANADIUM	UG/L	CAC METALS							42.9	U	39.2	U
ZINC	UG/L	CAC METALS							70.5	U	108	U
CAC WET EXTRACTION	DATE	CAC WET EX										
COPPER	MG/L	CAC WET EX										
LEAD	MG/L	CAC WET EX	5.9				31					
TOTAL CYANIDE	MG/KG	CN	1	U	1	U						
TOTAL CYANIDE	MG/L	CN										
4,4'-DDD	UG/KG	PEST / PCB	19	U	19	U						
4,4'-DDE	UG/KG	PEST / PCB	19	U	19	U						
4,4'-DDT	UG/KG	PEST / PCB	19	U	19	U						
ALDRIN	UG/KG	PEST / PCB	9.6	U	9.6	U						
ALPHA-BHC	UG/KG	PEST / PCB	9.6	U	9.6	U						
ALPHA-CHLORDANE	UG/KG	PEST / PCB	96	U	96	U						
BETA-BHC	UG/KG	PEST / PCB	9.6	U	9.6	U						
DELTA-BHC	UG/KG	PEST / PCB	9.6	U	9.6	U						
DIBUTYL CHLORENDATE	UG/KG	PEST / PCB	36		106							
DIELDRIN	UG/KG	PEST / PCB	19	U	19	U						
ENDOSULFAN I	UG/KG	PEST / PCB	9.6	U	9.6	U						

NAVSTA-SAN DIEGO
SITE 4 WATER

		SAMPLE NUMBER:	NS4-MW3-S02-10		NS4-MW3-S02-10-FD		NS4-MW3-S02-15		NS4-MW4-GW1		NS4-MW4-GW2-FD	
		SAMPLING DATE:	01/28/91		01/28/91		01/28/91		02/11/91		02/11/91	
		BORING:	MW3		MW3		MW3		MW4		MW4	
		SITE:	NS4		NS4		NS4		NS4		NS4	
		DEPTH:	10		10-FD		15		NS4-MW4-GW1		FD	
COMPOUND NAME	UNITS	TEST CODE	RESULT	QUALIFIER	RESULT	QUALIFIER	RESULT	QUALIFIER	RESULT	QUALIFIER	RESULT	QUALIFIER
ENDOSULFAN II	UG/KG	PEST / PCB	19	U	19	U						
ENDOSULFAN SULFATE	UG/KG	PEST / PCB	19	U	19	U						
ENDRIN	UG/KG	PEST / PCB	19	U	19	U						
ENDRIN KETONE	UG/KG	PEST / PCB	19	U	19	U						
GAMMA-BHC (LINDANE)	UG/KG	PEST / PCB	9.6	U	9.6	U						
GAMMA-CHLORDANE	UG/KG	PEST / PCB	96	U	96	U						
HEPTACHLOR	UG/KG	PEST / PCB	9.6	U	9.6	U						
HEPTACHLOR EPOXIDE	UG/KG	PEST / PCB	9.6	U	9.6	U						
METHOXYCHLOR	UG/KG	PEST / PCB	96	U	96	U						
PCB-1016	UG/KG	PEST / PCB	96	U	96	U						
PCB-1221	UG/KG	PEST / PCB	96	U	96	U						
PCB-1232	UG/KG	PEST / PCB	96	U	96	U						
PCB-1242	UG/KG	PEST / PCB	96	U	96	U						
PCB-1248	UG/KG	PEST / PCB	96	U	96	U						
PCB-1254	UG/KG	PEST / PCB	190	U	190	U						
PCB-1260	UG/KG	PEST / PCB	190	U	190	U						
TOXAPHENE	UG/KG	PEST / PCB	190	U	190	U						
4,4'-DDD	UG/L	PEST / PCB							0.1	U	0.1	U
4,4'-DDE	UG/L	PEST / PCB							0.1	U	0.1	U
4,4'-DDT	UG/L	PEST / PCB							0.1	U	0.1	U
ALDRIN	UG/L	PEST / PCB							0.05	U	0.05	U
ALPHA-BHC	UG/L	PEST / PCB							0.05	U	0.05	U
ALPHA-CHLORDANE	UG/L	PEST / PCB							0.5	U	0.5	U
BETA-BHC	UG/L	PEST / PCB							0.05	U	0.05	U
DELTA-BHC	UG/L	PEST / PCB							0.05	U	0.05	U
DIBUTYL CHLORENDATE	UG/L	PEST / PCB							76		71	
DIELDRIN	UG/L	PEST / PCB							0.1	U	0.1	U
ENDOSULFAN I	UG/L	PEST / PCB							0.05	U	0.05	U
ENDOSULFAN II	UG/L	PEST / PCB							0.1	U	0.1	U
ENDOSULFAN SULFATE	UG/L	PEST / PCB							0.1	U	0.1	U
ENDRIN	UG/L	PEST / PCB							0.1	U	0.1	U
ENDRIN KETONE	UG/L	PEST / PCB							0.1	U	0.1	U
GAMMA-BHC (LINDANE)	UG/L	PEST / PCB							0.05	U	0.05	U
GAMMA-CHLORDANE	UG/L	PEST / PCB							0.5	U	0.5	U
HEPTACHLOR	UG/L	PEST / PCB							0.05	U	0.05	U
HEPTACHLOR EPOXIDE	UG/L	PEST / PCB							0.05	U	0.05	U
METHOXYCHLOR	UG/L	PEST / PCB							0.5	U	0.5	U
PCB-1016	UG/L	PEST / PCB							0.5	U	0.5	U
PCB-1221	UG/L	PEST / PCB							0.5	U	0.5	U
PCB-1232	UG/L	PEST / PCB							0.5	U	0.5	U
PCB-1242	UG/L	PEST / PCB							0.5	U	0.5	U
PCB-1248	UG/L	PEST / PCB							0.5	U	0.5	U
PCB-1254	UG/L	PEST / PCB							1	U	1	U
PCB-1260	UG/L	PEST / PCB							1	U	1	U
TOXAPHENE	UG/L	PEST / PCB							1	U	1	U
DIESEL	MG/KG	TPHC										
JP4	MG/KG	TPHC										
JP5	MG/KG	TPHC										
STODDARD	MG/KG	TPHC	10	U	10	U						
DIESEL	UG/KG	TPHC										
JP4	*UG/KG*	*TPHC*										

NAVSTA-SAN DIEGO
SITE 4 WATER

		SAMPLE NUMBER:	NS4-MW3-S02-10		NS4-MW3-S02-10-FD		NS4-MW3-S02-15		NS4-MW4-GW1		NS4-MW4-GW2-FD	
		SAMPLING DATE:	01/28/91		01/28/91		01/28/91		02/11/91		02/11/91	
		BORING:	MW3		MW3		MW3		MW4		MW4	
		SITE:	NS4		NS4		NS4		NS4		NS4	
		DEPTH:	10		10-FD		15		NS4-MW4-GW1		FD	
COMPOUND NAME	UNITS	TEST CODE	RESULT	QUALIFIER	RESULT	QUALIFIER	RESULT	QUALIFIER	RESULT	QUALIFIER	RESULT	QUALIFIER
JP5	UG/KG	TPHC										
STODDARD	UG/KG	TPHC										
BENZO(A)PYRENE	UG/L	TPHC							64		4	
STODDARD	UG/L	TPHC							250	U	250	U
1,1,1-TRICHLOROETHANE	UG/KG	VOA	6	U	6	U						
1,1,2,2-TETRACHLOROETHANE	UG/KG	VOA	6	U	6	U						
1,1,2-TRICHLOROETHANE	UG/KG	VOA	6	U	6	U						
1,1-DICHLOROETHANE	UG/KG	VOA	6	U	6	U						
1,1-DICHLOROETHENE	UG/KG	VOA	6	U	6	U						
1,2-DICHLOROETHANE	UG/KG	VOA	6	U	6	U						
1,2-DICHLOROETHENE (TOTAL)	UG/KG	VOA	6	U	6	U						
1,2-DICHLOROPROPANE	UG/KG	VOA	6	U	6	U						
2-BUTANONE	UG/KG	VOA	12	U	12	U						
2-HEXANONE	UG/KG	VOA	12	U	12	U						
4-METHYL-2-PENTANONE	UG/KG	VOA	12	U	12	U						
ACETONE	UG/KG	VOA	20	U	23	U						
BENZENE	UG/KG	VOA	6	U	6	U						
BROMODICHLOROMETHANE	UG/KG	VOA	6	U	6	U						
BROMOFORM	UG/KG	VOA	6	U	6	U						
BROMOMETHANE	UG/KG	VOA	12	U	12	U						
CARBON DISULFIDE	UG/KG	VOA	1	J	6	U						
CARBON TETRACHLORIDE	UG/KG	VOA	6	U	6	U						
CHLOROBENZENE	UG/KG	VOA	6	U	6	U						
CHLOROETHANE	UG/KG	VOA	12	U	12	U						
CHLOROFORM	UG/KG	VOA	6	U	6	U						
CHLOROMETHANE	UG/KG	VOA	12	U	12	U						
CIS-1,3-DICHLOROPROPENE	UG/KG	VOA	6	U	6	U						
DIBROMOCHLOROMETHANE	UG/KG	VOA	6	U	6	U						
ETHYLBENZENE	UG/KG	VOA	6	U	6	U						
METHYLENE CHLORIDE	UG/KG	VOA	12	U	12	U						
STYRENE	UG/KG	VOA	6	U	6	U						
TETRACHLOROETHENE	UG/KG	VOA	6	U	6	U						
TOLUENE	UG/KG	VOA	6	U	6	U						
TRANS-1,3-DICHLOROPROPENE	UG/KG	VOA	6	U	6	U						
TRICHLOROETHENE	UG/KG	VOA	6	U	6	U						
VINYL ACETATE	UG/KG	VOA	12	U	12	U						
VINYL CHLORIDE	UG/KG	VOA	12	U	12	U						
XYLENES (TOTAL)	UG/KG	VOA	6	U	6	U						
1,1,1-TRICHLOROETHANE	UG/L	VOA							5	U	5	U
1,1,2,2-TETRACHLOROETHANE	UG/L	VOA							5	U	5	U
1,1,2-TRICHLOROETHANE	UG/L	VOA							5	U	5	U
1,1-DICHLOROETHANE	UG/L	VOA							5	U	5	U
1,1-DICHLOROETHENE	UG/L	VOA							5	U	5	U
1,2-DICHLOROETHANE	UG/L	VOA							5	U	5	U
1,2-DICHLOROETHANE-D4	UG/L	VOA							98		100	
1,2-DICHLOROETHENE (TOTAL)	UG/L	VOA							5	U	5	U
1,2-DICHLOROPROPANE	UG/L	VOA							5	U	5	U
2-BUTANONE	UG/L	VOA							10	U	10	U
2-HEXANONE	UG/L	VOA							10	U	10	U
4-METHYL-2-PENTANONE	UG/L	VOA							10	U	10	U
ACETONE	UG/L	VOA							10	U	10	U

NAVSTA-SAN DIEGO
SITE 4 WATER

		SAMPLE NUMBER:	NS4-MW3-S02-10		NS4-MW3-S02-10-FD		NS4-MW3-S02-15		NS4-MW4-GW1		NS4-MW4-GW2-FD	
		SAMPLING DATE:	01/28/91		01/28/91		01/28/91		02/11/91		02/11/91	
		BORING:	MW3		MW3		MW3		MW4		MW4	
		SITE:	NS4		NS4		NS4		NS4		NS4	
		DEPTH:	10		10-FD		15		NS4-MW4-GW1		FD	
COMPOUND NAME	UNITS	TEST CODE	RESULT	QUALIFIER	RESULT	QUALIFIER	RESULT	QUALIFIER	RESULT	QUALIFIER	RESULT	QUALIFIER
BENZENE	UG/L	VOA							5	U	5	U
BROMODICHLOROMETHANE	UG/L	VOA							5	U	5	U
BROMOFLUOROBENZENE	UG/L	VOA							108		101	
BROMOFORM	UG/L	VOA							5	U	5	U
BROMOMETHANE	UG/L	VOA							10	U	10	U
CARBON DISULFIDE	UG/L	VOA							5	U	5	U
CARBON TETRACHLORIDE	UG/L	VOA							5	U	5	U
CHLOROBENZENE	UG/L	VOA							5	U	5	U
CHLOROETHANE	UG/L	VOA							10	U	10	U
CHLOROFORM	UG/L	VOA							5	U	5	U
CHLOROMETHANE	UG/L	VOA							10	U	10	U
CIS-1,3-DICHLOROPROPENE	UG/L	VOA							5	U	5	U
DIBROMOCHLOROMETHANE	UG/L	VOA							5	U	5	U
ETHYLBENZENE	UG/L	VOA							5	U	5	U
METHYLENE CHLORIDE	UG/L	VOA							5	U	5	U
STYRENE	UG/L	VOA							5	U	5	U
TETRACHLOROETHENE	UG/L	VOA							5	U	5	U
TOLUENE	UG/L	VOA							5	U	5	U
TOLUENE-D8	UG/L	VOA							109		108	
TRANS-1,3-DICHLOROPROPENE	UG/L	VOA							5	U	5	U
TRICHLOROETHENE	UG/L	VOA							5	U	5	U
VINYL ACETATE	UG/L	VOA							10	U	10	U
VINYL CHLORIDE	UG/L	VOA							10	U	10	U
XYLENES (TOTAL)	UG/L	VOA							5	U	5	U

NAVSTA-SAN DIEGO
SITE 4 WATER

		SAMPLE NUMBER:	NS4-MW4-S01-5		NS4-MW4-S02-10		NS4-MW4-S03-15		NS4-MW4-S04-20		NS4-SS1-S01	
		SAMPLING DATE:	01/29/91		01/29/91		01/29/91		01/29/91		02/12/91	
		BORING:	MW4		MW4		MW4		MW4		SS1	
		SITE:	NS4		NS4		NS4		NS4		NS4	
		DEPTH:	5		10		15		20		NS4-SS1-S01	
COMPOUND NAME	UNITS	TEST CODE	RESULT	QUALIFIER	RESULT	QUALIFIER	RESULT	QUALIFIER	RESULT	QUALIFIER	RESULT	QUALIFIER
1,2,4-TRICHLOROBENZENE	UG/KG	BNA	380	U	400	U	400	U	390	U	440	U
1,2-DICHLOROBENZENE	UG/KG	BNA	380	U	400	U	400	U	390	U	440	U
1,3-DICHLOROBENZENE	UG/KG	BNA	380	U	400	U	400	U	390	U	440	U
1,4-DICHLOROBENZENE	UG/KG	BNA	380	U	400	U	400	U	390	U	440	U
2,4,5-TRICHLOROPHENOL	UG/KG	BNA	1900	U	2000	U	2000	U	1900	U	2100	U
2,4,6-TRICHLOROPHENOL	UG/KG	BNA	380	U	400	U	400	U	390	U	440	U
2,4-DICHLOROPHENOL	UG/KG	BNA	380	U	400	U	400	U	390	U	440	U
2,4-DIMETHYLPHENOL	UG/KG	BNA	380	U	400	U	400	U	390	U	440	U
2,4-DINITROPHENOL	UG/KG	BNA	1900	U	2000	U	2000	U	1900	U	2100	U
2,4-DINITROTOLUENE	UG/KG	BNA	380	U	400	U	400	U	390	U	440	U
2,6-DINITROTOLUENE	UG/KG	BNA	380	U	400	U	400	U	390	U	440	U
2-CHLORONAPHTHALENE	UG/KG	BNA	380	U	400	U	400	U	390	U	440	U
2-CHLOROPHENOL	UG/KG	BNA	380	U	400	U	400	U	390	U	440	U
2-METHYLNAPHTHALENE	UG/KG	BNA	380	U	400	U	400	U	390	U	440	U
2-METHYLPHENOL	UG/KG	BNA	380	U	400	U	400	U	390	U	440	U
2-NITROANILINE	UG/KG	BNA	1900	U	2000	U	2000	U	1900	U	2100	U
2-NITROPHENOL	UG/KG	BNA	380	U	400	U	400	U	390	U	440	U
3,3'-DICHLOROBENZIDINE	UG/KG	BNA	770	U	810	U	810	U	790	U	880	U
3-NITROANILINE	UG/KG	BNA	1900	U	2000	U	2000	U	1900	U	2100	U
4,6-DINITRO-2-METHYLPHENOL	UG/KG	BNA	1900	U	2000	U	2000	U	1900	U	2100	U
4-BROMOPHENYL-PHENYLETHER	UG/KG	BNA	380	U	400	U	400	U	390	U	440	U
4-CHLORO-3-METHYLPHENOL	UG/KG	BNA	380	U	400	U	400	U	390	U	440	U
4-CHLOROANILINE	UG/KG	BNA	380	U	400	U	400	U	390	U	440	U
4-CHLOROPHENYL-PHENYLETHER	UG/KG	BNA	380	U	400	U	400	U	390	U	440	U
4-METHYLPHENOL	UG/KG	BNA	380	U	400	U	400	U	390	U	440	U
4-NITROANILINE	UG/KG	BNA	1900	U	2000	U	2000	U	1900	U	2100	U
4-NITROPHENOL	UG/KG	BNA	1900	U	2000	U	2000	U	1900	U	2100	U
ACENAPHTHENE	UG/KG	BNA	380	U	400	U	400	U	390	U	440	U
ACENAPHTHYLENE	UG/KG	BNA	380	U	400	U	400	U	390	U	80	J
ANTHRACENE	UG/KG	BNA	380	U	400	U	400	U	390	U	51	J
BENZO(A)ANTHRACENE	UG/KG	BNA	380	U	400	U	400	U	390	U	220	J
BENZO(A)PYRENE	UG/KG	BNA	380	U	400	U	400	U	390	U	310	J
BENZO(B)FLUORANTHENE	UG/KG	BNA	380	U	400	U	400	U	390	U	360	J
BENZO(G,H,I)PERYLENE	UG/KG	BNA	380	U	400	U	400	U	390	U	380	J
BENZO(K)FLUORANTHENE	UG/KG	BNA	380	U	400	U	400	U	390	U	450	
BENZOIC ACID	UG/KG	BNA	1900	U	2000	U	2000	U	1900	U	93	J
BENZYL ALCOHOL	UG/KG	BNA	380	U	400	U	400	U	390	U	440	U
BIS(2-CHLOROETHOXY)METHANE	UG/KG	BNA	380	U	400	U	400	U	390	U	440	U
BIS(2-CHLOROETHYL)ETHER	UG/KG	BNA	380	U	400	U	400	U	390	U	440	U
BIS(2-CHLOROISOPROPYL)ETHER	UG/KG	BNA	380	U	400	U	400	U	390	U	440	U
BIS(2-ETHYLHEXYL)PHTHALATE	UG/KG	BNA	380	U	400	U	400	U	390	U	420	J
BUTYLBENZYLPHTHALATE	UG/KG	BNA	380	U	400	U	400	U	390	U	440	U
CHRYSENE	UG/KG	BNA	380	U	400	U	400	U	390	U	460	
DI-N-BUTYLPHTHALATE	UG/KG	BNA	380	U	400	U	400	U	390	U	440	U
DI-N-OCTYLPHTHALATE	UG/KG	BNA	380	U	400	U	400	U	390	U	440	U
DIBENZ(A,H)ANTHRACENE	UG/KG	BNA	380	U	400	U	400	U	390	U	91	J
DIBENZOFURAN	UG/KG	BNA	380	U	400	U	400	U	390	U	440	U
DIETHYLPHTHALATE	UG/KG	BNA	380	U	400	U	400	U	390	U	440	U
DIMETHYLPHTHALATE	UG/KG	BNA	380	U	400	U	400	U	390	U	440	U
FLUORANTHENE	UG/KG	BNA	380	U	400	U	400	U	390	U	400	J
FLUORENE	UG/KG	BNA	380	U	400	U	400	U	390	U	440	U

NAVSTA-SAN DIEGO
SITE 4 WATER

		SAMPLE NUMBER:	NS4-MW4-S01-5		NS4-MW4-S02-10		NS4-MW4-S03-15		NS4-MW4-S04-20		NS4-SS1-S01	
		SAMPLING DATE:	01/29/91		01/29/91		01/29/91		01/29/91		02/12/91	
		BORING:	MW4		MW4		MW4		MW4		SS1	
		SITE:	NS4		NS4		NS4		NS4		NS4	
		DEPTH:	5		10		15		20		NS4-SS1-S01	
COMPOUND NAME	UNITS	TEST CODE	RESULT	QUALIFIER	RESULT	QUALIFIER	RESULT	QUALIFIER	RESULT	QUALIFIER	RESULT	QUALIFIER
HEXACHLOROBENZENE	UG/KG	BNA	380	U	400	U	400	U	390	U	440	U
HEXACHLOROBUTADIENE	UG/KG	BNA	380	U	400	U	400	U	390	U	440	U
HEXACHLOROCYCLOPENTADIENE	UG/KG	BNA	380	U	400	U	400	U	390	U	440	U
HEXACHLOROETHANE	UG/KG	BNA	380	U	400	U	400	U	390	U	440	U
INDENO(1,2,3-C,D)PYRENE	UG/KG	BNA	380	U	400	U	400	U	390	U	240	J
ISOPHORONE	UG/KG	BNA	380	U	400	U	400	U	390	U	440	U
N-NITROSO-DI-N-PROPYLAMINE	UG/KG	BNA	380	U	400	U	400	U	390	U	440	U
N-NITROSODIPHENYLAMINE (1)	UG/KG	BNA	380	U	400	U	400	U	390	U	440	U
NAPHTHALENE	UG/KG	BNA	380	U	400	U	400	U	390	U	440	U
NITROBENZENE	UG/KG	BNA	380	U	400	U	400	U	390	U	440	U
PENTACHLOROPHENOL	UG/KG	BNA	1900	U	2000	U	2000	U	1900	U	2100	U
PHENANTHRENE	UG/KG	BNA	380	U	400	U	400	U	390	U	200	J
PHENOL	UG/KG	BNA	380	U	400	U	400	U	390	U	440	U
PYRENE	UG/KG	BNA	380	U	400	U	400	U	390	U	980	
1,2,4-TRICHLOROBENZENE	UG/L	BNA										
1,2-DICHLOROBENZENE	UG/L	BNA										
1,3-DICHLOROBENZENE	UG/L	BNA										
1,4-DICHLOROBENZENE	UG/L	BNA										
2,4,5-TRICHLOROPHENOL	UG/L	BNA										
2,4,6-TRIBROMOPHENOL	UG/L	BNA										
2,4,6-TRICHLOROPHENOL	UG/L	BNA										
2,4-DICHLOROPHENOL	UG/L	BNA										
2,4-DIMETHYLPHENOL	UG/L	BNA										
2,4-DINITROPHENOL	UG/L	BNA										
2,4-DINITROTOLUENE	UG/L	BNA										
2,6-DINITROTOLUENE	UG/L	BNA										
2-CHLORONAPHTHALENE	UG/L	BNA										
2-CHLOROPHENOL	UG/L	BNA										
2-FLUOROBIPHENYL	UG/L	BNA										
2-FLUOROPHENOL	UG/L	BNA										
2-METHYLNAPHTHALENE	UG/L	BNA										
2-METHYLPHENOL	UG/L	BNA										
2-NITROANILINE	UG/L	BNA										
2-NITROPHENOL	UG/L	BNA										
3,3'-DICHLOROBENZIDINE	UG/L	BNA										
3-NITROANILINE	UG/L	BNA										
4,6-DINITRO-2-METHYLPHENOL	UG/L	BNA										
4-BROMOPHENYL-PHENYLETHER	UG/L	BNA										
4-CHLORO-3-METHYLPHENOL	UG/L	BNA										
4-CHLOROANILINE	UG/L	BNA										
4-CHLOROPHENYL-PHENYLETHER	UG/L	BNA										
4-METHYLPHENOL	UG/L	BNA										
4-NITROANILINE	UG/L	BNA										
4-NITROPHENOL	UG/L	BNA										
ACENAPHTHENE	UG/L	BNA										
ACENAPHTHYLENE	UG/L	BNA										
ANTHRACENE	UG/L	BNA										
BENZO(A)ANTHRACENE	UG/L	BNA										
BENZO(A)PYRENE	UG/L	BNA										
BENZO(B)FLUORANTHENE	UG/L	BNA										
BENZO(G,H,I)PERYLENE	UG/L	BNA										

NAVSTA-SAN DIEGO
SITE 4 WATER

		SAMPLE NUMBER:	NS4-MW4-S01-5		NS4-MW4-S02-10		NS4-MW4-S03-15		NS4-MW4-S04-20		NS4-SS1-S01	
		SAMPLING DATE:	01/29/91		01/29/91		01/29/91		01/29/91		02/12/91	
		BORING:	MW4		MW4		MW4		MW4		SS1	
		SITE:	NS4		NS4		NS4		NS4		NS4	
		DEPTH:	5		10		15		20		NS4-SS1-S01	
COMPOUND NAME	UNITS	TEST CODE	RESULT	QUALIFIER	RESULT	QUALIFIER	RESULT	QUALIFIER	RESULT	QUALIFIER	RESULT	QUALIFIER
BENZO(K)FLUORANTHENE	UG/L	BNA										
BENZOIC ACID	UG/L	BNA										
BENZYL ALCOHOL	UG/L	BNA										
BIS(2-CHLOROETHOXY)METHANE	UG/L	BNA										
BIS(2-CHLOROETHYL)ETHER	UG/L	BNA										
BIS(2-CHLOROISOPROPYL)ETHER	UG/L	BNA										
BIS(2-ETHYLHEXYL)PHTHALATE	UG/L	BNA										
BUTYLBENZYLPHTHALATE	UG/L	BNA										
CHRYSENE	UG/L	BNA										
DI-N-BUTYLPHTHALATE	UG/L	BNA										
DI-N-OCTYLPHTHALATE	UG/L	BNA										
DIBENZ(A,H)ANTHRACENE	UG/L	BNA										
DIBENZO(A,H)ANTHRACENE	UG/L	BNA										
DIBENZOFURAN	UG/L	BNA										
DIETHYLPHTHALATE	UG/L	BNA										
DIMETHYLPHTHALATE	UG/L	BNA										
FLUORANTHENE	UG/L	BNA										
FLUORENE	UG/L	BNA										
HEXACHLOROBENZENE	UG/L	BNA										
HEXACHLOROBUTADIENE	UG/L	BNA										
HEXACHLOROCYCLOPENTADIENE	UG/L	BNA										
HEXACHLOROETHANE	UG/L	BNA										
INDENO(1,2,3-C,D)PYRENE	UG/L	BNA										
ISOPHORONE	UG/L	BNA										
N-NITROSO-DI-N-PROPYLAMINE	UG/L	BNA										
N-NITROSODIPHENYLAMINE (1)	UG/L	BNA										
NAPHTHALENE	UG/L	BNA										
NITROBENZENE	UG/L	BNA										
NITROBENZENE-D5	UG/L	BNA										
PENTACHLOROPHENOL	UG/L	BNA										
PHENANTHRENE	UG/L	BNA										
PHENOL	UG/L	BNA										
PHENOL-D5	UG/L	BNA										
PYRENE	UG/L	BNA										
TERPHENYL-D14	UG/L	BNA										
ANTIMONY	MG/KG	CAC METALS	4.3	U	4.5	U	4.5	U	4.5	U	6.0	J
ARSENIC	MG/KG	CAC METALS	1.6	B	1.0	B	2.7		2.2	B	5.4	J
BARIUM	MG/KG	CAC METALS	75.1		25.6	B	74.9		163		171	
BERYLLIUM	MG/KG	CAC METALS	1.7		2.9		3.0		3.1		4.9	
CADMIUM	MG/KG	CAC METALS	0.91	U	0.95	U	0.97	U	0.94	U	1.9	
CHROMIUM	MG/KG	CAC METALS	9.8		18.3		17.1		16.2		67.3	
COBALT	MG/KG	CAC METALS	5.3	B	6.2	B	8.9	B	10.6	B	16.2	
COPPER	MG/KG	CAC METALS	7.7	U	26.5		24.8	U	18.8	U	421	
LEAD	MG/KG	CAC METALS	16.4		3.6		5.0	U	4.4	U	223	J
MERCURY	MG/KG	CAC METALS	0.18	U	0.18	U	0.18	U	0.18	U	0.37	
MOLYBDENUM	MG/KG	CAC METALS	1.6	U	1.7	U	1.7	U	1.9	B	1.9	B
NICKEL	MG/KG	CAC METALS	3.7	U	4.2	B	9.5	U	4.5	U	30.7	
SELENIUM	MG/KG	CAC METALS	0.43	U	0.23	U	0.24	U	0.23	U	0.25	U
SILVER	MG/KG	CAC METALS	1.1	U	0.71	U	0.73	U	1.1	U	2.2	U
THALLIUM	MG/KG	CAC METALS	0.43	U	0.23	U	0.24	U	0.23	U	0.25	B
VANADIUM	MG/KG	CAC METALS	27.5		51.1		44.5		49.9		92.8	

NAVSTA-SAN DIEGO
SITE 4 WATER

		SAMPLE NUMBER:	NS4-MW4-S01-5		NS4-MW4-S02-10		NS4-MW4-S03-15		NS4-MW4-S04-20		NS4-SS1-S01	
		SAMPLING DATE:	01/29/91		01/29/91		01/29/91		01/29/91		02/12/91	
		BORING:	MW4		MW4		MW4		MW4		SS1	
		SITE:	NS4		NS4		NS4		NS4		NS4	
		DEPTH:	5		10		15		20		NS4-SS1-S01	
COMPOUND NAME	UNITS	TEST CODE	RESULT	QUALIFIER	RESULT	QUALIFIER	RESULT	QUALIFIER	RESULT	QUALIFIER	RESULT	QUALIFIER
ZINC	MG/KG	CAC METALS	35.5	U	40.6		46.4	U	50.7	U	649	
ANTIMONY	UG/KG	CAC METALS										
ARSENIC	UG/KG	CAC METALS										
BARIUM	UG/KG	CAC METALS										
BERYLLIUM	UG/KG	CAC METALS										
CADMIUM	UG/KG	CAC METALS										
CHROMIUM	UG/KG	CAC METALS										
COBALT	UG/KG	CAC METALS										
COPPER	UG/KG	CAC METALS										
LEAD	UG/KG	CAC METALS										
MERCURY	UG/KG	CAC METALS										
MOLYBDENUM	UG/KG	CAC METALS										
NICKEL	UG/KG	CAC METALS										
SELENIUM	UG/KG	CAC METALS										
SILVER	UG/KG	CAC METALS										
THALLIUM	UG/KG	CAC METALS										
VANADIUM	UG/KG	CAC METALS										
ZINC	UG/KG	CAC METALS										
ANTIMONY	UG/L	CAC METALS										
ARSENIC	UG/L	CAC METALS										
BARIUM	UG/L	CAC METALS										
BERYLLIUM	UG/L	CAC METALS										
CADMIUM	UG/L	CAC METALS										
CHROMIUM	UG/L	CAC METALS										
COBALT	UG/L	CAC METALS										
COPPER	UG/L	CAC METALS										
LEAD	UG/L	CAC METALS										
MERCURY	UG/L	CAC METALS										
MOLYBDENUM	UG/L	CAC METALS										
NICKEL	UG/L	CAC METALS										
SELENIUM	UG/L	CAC METALS										
SILVER	UG/L	CAC METALS										
THALLIUM	UG/L	CAC METALS										
VANADIUM	UG/L	CAC METALS										
ZINC	UG/L	CAC METALS										
CAC WET EXTRACTION	DATE	CAC WET EX										
COPPER	MG/L	CAC WET EX									9.43	
LEAD	MG/L	CAC WET EX									5.06	
TOTAL CYANIDE	MG/KG	CN	1	U	1	U	1	U	1	U		
TOTAL CYANIDE	MG/L	CN										
4,4'-DDD	UG/KG	PEST / PCB	19	U	20	U	20	U	19	U	210	UJ
4,4'-DDE	UG/KG	PEST / PCB	19	U	20	U	20	U	19	U	210	UJ
4,4'-DDT	UG/KG	PEST / PCB	19	U	20	U	20	U	19	U	210	UJ
ALDRIN	UG/KG	PEST / PCB	9.3	U	9.8	U	9.8	U	9.5	U	110	UJ
ALPHA-BHC	UG/KG	PEST / PCB	9.3	U	9.8	U	9.8	U	9.5	U	110	UJ
ALPHA-CHLORDANE	UG/KG	PEST / PCB	93	U	98	U	98	U	95	U	180	J
BETA-BHC	UG/KG	PEST / PCB	9.3	U	9.8	U	9.8	U	9.5	U	110	UJ
DELTA-BHC	UG/KG	PEST / PCB	9.3	U	9.8	U	9.8	U	9.5	U	110	UJ
DIBUTYL CHLORENDATE	UG/KG	PEST / PCB	70		53		91		90		67	
DIELDRIN	UG/KG	PEST / PCB	19	U	20	U	20	U	19	U	210	UJ
ENDOSULFAN I	UG/KG	PEST / PCB	9.3	U	9.8	U	9.8	U	9.5	U	110	UJ

NAVSTA-SAN DIEGO
SITE 4 WATER

		SAMPLE NUMBER:	NS4-MW4-S01-5		NS4-MW4-S02-10		NS4-MW4-S03-15		NS4-MW4-S04-20		NS4-SS1-S01	
		SAMPLING DATE:	01/29/91		01/29/91		01/29/91		01/29/91		02/12/91	
		BORING:	MW4		MW4		MW4		MW4		SS1	
		SITE:	NS4		NS4		NS4		NS4		NS4	
		DEPTH:	5		10		15		20		NS4-SS1-S01	
COMPOUND NAME	UNITS	TEST CODE	RESULT	QUALIFIER	RESULT	QUALIFIER	RESULT	QUALIFIER	RESULT	QUALIFIER	RESULT	QUALIFIER
ENDOSULFAN II	UG/KG	PEST / PCB	19	U	20	U	20	U	19	U	210	UJ
ENDOSULFAN SULFATE	UG/KG	PEST / PCB	19	U	20	U	20	U	19	U	210	UJ
ENDRIN	UG/KG	PEST / PCB	19	U	20	U	20	U	19	U	210	UJ
ENDRIN KETONE	UG/KG	PEST / PCB	19	U	20	U	20	U	19	U	210	UJ
GAMMA-BHC (LINDANE)	UG/KG	PEST / PCB	9.3	U	9.8	U	9.8	U	9.5	U	110	UJ
GAMMA-CHLORDANE	UG/KG	PEST / PCB	93	U	98	U	98	U	95	U	170	J
HEPTACHLOR	UG/KG	PEST / PCB	9.3	U	9.8	U	9.8	U	9.5	U	110	UJ
HEPTACHLOR EPOXIDE	UG/KG	PEST / PCB	9.3	U	9.8	U	9.8	U	9.5	U	110	UJ
METHOXYCHLOR	UG/KG	PEST / PCB	93	U	98	U	98	U	95	U	1100	UJ
PCB-1016	UG/KG	PEST / PCB	93	U	98	U	98	U	95	U	1100	UJ
PCB-1221	UG/KG	PEST / PCB	93	U	98	U	98	U	95	U	1100	UJ
PCB-1232	UG/KG	PEST / PCB	93	U	98	U	98	U	95	U	1100	UJ
PCB-1242	UG/KG	PEST / PCB	93	U	98	U	98	U	95	U	1100	UJ
PCB-1248	UG/KG	PEST / PCB	93	U	98	U	98	U	95	U	1100	UJ
PCB-1254	UG/KG	PEST / PCB	190	U	200	U	200	U	190	U	2100	UJ
PCB-1260	UG/KG	PEST / PCB	190	U	200	U	200	U	190	U	2100	UJ
TOXAPHENE	UG/KG	PEST / PCB	190	U	200	U	200	U	190	U	2100	UJ
4,4'-DDD	UG/L	PEST / PCB										
4,4'-DDE	UG/L	PEST / PCB										
4,4'-DDT	UG/L	PEST / PCB										
ALDRIN	UG/L	PEST / PCB										
ALPHA-BHC	UG/L	PEST / PCB										
ALPHA-CHLORDANE	UG/L	PEST / PCB										
BETA-BHC	UG/L	PEST / PCB										
DELTA-BHC	UG/L	PEST / PCB										
DIBUTYL CHLORENDATE	UG/L	PEST / PCB										
DIELDRIN	UG/L	PEST / PCB										
ENDOSULFAN I	UG/L	PEST / PCB										
ENDOSULFAN II	UG/L	PEST / PCB										
ENDOSULFAN SULFATE	UG/L	PEST / PCB										
ENDRIN	UG/L	PEST / PCB										
ENDRIN KETONE	UG/L	PEST / PCB										
GAMMA-BHC (LINDANE)	UG/L	PEST / PCB										
GAMMA-CHLORDANE	UG/L	PEST / PCB										
HEPTACHLOR	UG/L	PEST / PCB										
HEPTACHLOR EPOXIDE	UG/L	PEST / PCB										
METHOXYCHLOR	UG/L	PEST / PCB										
PCB-1016	UG/L	PEST / PCB										
PCB-1221	UG/L	PEST / PCB										
PCB-1232	UG/L	PEST / PCB										
PCB-1242	UG/L	PEST / PCB										
PCB-1248	UG/L	PEST / PCB										
PCB-1254	UG/L	PEST / PCB										
PCB-1260	UG/L	PEST / PCB										
TOXAPHENE	UG/L	PEST / PCB										
DIESEL	MG/KG	TPHC										
JP4	MG/KG	TPHC										
JP5	MG/KG	TPHC										
STODDARD	MG/KG	TPHC	10	U	10	U	10	U	10	U	10	U
DIESEL	UG/KG	TPHC										
JP4	*UG/KG*	*TPHC*										

NAVSTA-SAN DIEGO
SITE 4 WATER

		SAMPLE NUMBER:	NS4-MW4-S01-5		NS4-MW4-S02-10		NS4-MW4-S03-15		NS4-MW4-S04-20		NS4-SS1-S01	
		SAMPLING DATE:	01/29/91		01/29/91		01/29/91		01/29/91		02/12/91	
		BORING:	MW4		MW4		MW4		MW4		SS1	
		SITE:	NS4		NS4		NS4		NS4		NS4	
		DEPTH:	5		10		15		20		NS4-SS1-S01	
COMPOUND NAME	UNITS	TEST CODE	RESULT	QUALIFIER	RESULT	QUALIFIER	RESULT	QUALIFIER	RESULT	QUALIFIER	RESULT	QUALIFIER
JP5	UG/KG	TPHC										
STODDARD	UG/KG	TPHC										
BENZO(A)PYRENE	UG/L	TPHC										
STODDARD	UG/L	TPHC										
1,1,1-TRICHLOROETHANE	UG/KG	VOA	6	U	6	U	6	U	6	U	7	U
1,1,2,2-TETRACHLOROETHANE	UG/KG	VOA	6	U	6	U	6	U	6	U	7	U
1,1,2-TRICHLOROETHANE	UG/KG	VOA	6	U	6	U	6	U	6	U	7	U
1,1-DICHLOROETHANE	UG/KG	VOA	6	U	6	U	6	U	6	U	7	U
1,1-DICHLOROETHENE	UG/KG	VOA	6	U	6	U	6	U	6	U	7	U
1,2-DICHLOROETHANE	UG/KG	VOA	6	U	6	U	6	U	6	U	7	U
1,2-DICHLOROETHENE (TOTAL)	UG/KG	VOA	6	U	6	U	6	U	6	U	7	U
1,2-DICHLOROPROPANE	UG/KG	VOA	6	U	6	U	6	U	6	U	7	U
2-BUTANONE	UG/KG	VOA	12	U	12	U	12	U	12	U	13	U
2-HEXANONE	UG/KG	VOA	12	U	12	U	12	U	12	U	13	U
4-METHYL-2-PENTANONE	UG/KG	VOA	12	U	12	U	12	U	12	U	13	U
ACETONE	UG/KG	VOA	15	U	12	U	12	U	12	U	13	U
BENZENE	UG/KG	VOA	6	U	6	U	6	U	6	U	7	U
BROMODICHLOROMETHANE	UG/KG	VOA	6	U	6	U	6	U	6	U	7	U
BROMOFORM	UG/KG	VOA	6	U	6	U	6	U	6	U	7	U
BROMOMETHANE	UG/KG	VOA	12	U	12	U	12	U	12	U	13	U
CARBON DISULFIDE	UG/KG	VOA	6	U	11		6	U	6	U	7	U
CARBON TETRACHLORIDE	UG/KG	VOA	6	U	6	U	6	U	6	U	7	U
CHLOROBENZENE	UG/KG	VOA	6	U	6	U	6	U	6	U	7	U
CHLOROETHANE	UG/KG	VOA	12	U	12	U	12	U	12	U	13	U
CHLOROFORM	UG/KG	VOA	6	U	6	U	6	U	6	U	7	U
CHLOROMETHANE	UG/KG	VOA	12	U	12	U	12	U	12	U	13	U
CIS-1,3-DICHLOROPROPENE	UG/KG	VOA	6	U	6	U	6	U	6	U	7	U
DIBROMOCHLOROMETHANE	UG/KG	VOA	6	U	6	U	6	U	6	U	7	U
ETHYLBENZENE	UG/KG	VOA	6	U	6	U	6	U	6	U	7	U
METHYLENE CHLORIDE	UG/KG	VOA	8	U	9	U	10	U	9	U	10	U
STYRENE	UG/KG	VOA	6	U	6	U	6	U	6	U	7	U
TETRACHLOROETHENE	UG/KG	VOA	6	U	6	U	6	U	6	U	7	U
TOLUENE	UG/KG	VOA	6	U	6	U	6	U	6	U	7	U
TRANS-1,3-DICHLOROPROPENE	UG/KG	VOA	6	U	6	U	6	U	6	U	7	U
TRICHLOROETHENE	UG/KG	VOA	6	U	6	U	6	U	6	U	7	U
VINYL ACETATE	UG/KG	VOA	12	U	12	U	12	U	12	U	13	U
VINYL CHLORIDE	UG/KG	VOA	12	U	12	U	12	U	12	U	13	U
XYLENES (TOTAL)	UG/KG	VOA	6	U	6	U	6	U	6	U	7	U
1,1,1-TRICHLOROETHANE	UG/L	VOA										
1,1,2,2-TETRACHLOROETHANE	UG/L	VOA										
1,1,2-TRICHLOROETHANE	UG/L	VOA										
1,1-DICHLOROETHANE	UG/L	VOA										
1,1-DICHLOROETHENE	UG/L	VOA										
1,2-DICHLOROETHANE	UG/L	VOA										
1,2-DICHLOROETHANE-D4	UG/L	VOA										
1,2-DICHLOROETHENE (TOTAL)	UG/L	VOA										
1,2-DICHLOROPROPANE	UG/L	VOA										
2-BUTANONE	UG/L	VOA										
2-HEXANONE	UG/L	VOA										
4-METHYL-2-PENTANONE	UG/L	VOA										
ACETONE	UG/L	VOA										

NAVSTA-SAN DIEGO
SITE 4 WATER

		SAMPLE NUMBER:	NS4-MW4-S01-5		NS4-MW4-S02-10		NS4-MW4-S03-15		NS4-MW4-S04-20		NS4-SS1-S01	
		SAMPLING DATE:	01/29/91		01/29/91		01/29/91		01/29/91		02/12/91	
		BORING:	MW4		MW4		MW4		MW4		SS1	
		SITE:	NS4		NS4		NS4		NS4		NS4	
		DEPTH:	5		10		15		20		NS4-SS1-S01	
COMPOUND NAME	UNITS	TEST CODE	RESULT	QUALIFIER	RESULT	QUALIFIER	RESULT	QUALIFIER	RESULT	QUALIFIER	RESULT	QUALIFIER
BENZENE	UG/L	VOA										
BROMODICHLOROMETHANE	UG/L	VOA										
BROMOFLUOROBENZENE	UG/L	VOA										
BROMOFORM	UG/L	VOA										
BROMOMETHANE	UG/L	VOA										
CARBON DISULFIDE	UG/L	VOA										
CARBON TETRACHLORIDE	UG/L	VOA										
CHLOROBENZENE	UG/L	VOA										
CHLOROETHANE	UG/L	VOA										
CHLOROFORM	UG/L	VOA										
CHLOROMETHANE	UG/L	VOA										
CIS-1,3-DICHLOROPROPENE	UG/L	VOA										
DIBROMOCHLOROMETHANE	UG/L	VOA										
ETHYLBENZENE	UG/L	VOA										
METHYLENE CHLORIDE	UG/L	VOA										
STYRENE	UG/L	VOA										
TETRACHLOROETHENE	UG/L	VOA										
TOLUENE	UG/L	VOA										
TOLUENE-D8	UG/L	VOA										
TRANS-1,3-DICHLOROPROPENE	UG/L	VOA										
TRICHLOROETHENE	UG/L	VOA										
VINYL ACETATE	UG/L	VOA										
VINYL CHLORIDE	UG/L	VOA										
XYLENES (TOTAL)	UG/L	VOA										

NAVSTA-SAN DIEGO
SITE 4 WATER

		SAMPLE NUMBER:	NS4-SS2-S01		NS4-SS3-S01		NS4-TB-01/29/91		NS4-TB-02/11/91		NS4-TB-1/24/91	
		SAMPLING DATE:	02/12/91		02/12/91		01/29/91		02/11/91		01/24/91	
		BORING:	SS2		SS3		TB		TB		TB	
		SITE:	NS4		NS4		NS4		NS4		NS4	
		DEPTH:	NS4-SS2-S01		NS4-SS3-S01		NS4-TB-01/29/91		NS4-TB-02/11/91		NS4-TB-1/24/91	
COMPOUND NAME	UNITS	TEST CODE	RESULT	QUALIFIER	RESULT	QUALIFIER	RESULT	QUALIFIER	RESULT	QUALIFIER	RESULT	QUALIFIER
1,2,4-TRICHLOROBENZENE	UG/KG	BNA	620	U	440	U						
1,2-DICHLOROBENZENE	UG/KG	BNA	620	U	440	U						
1,3-DICHLOROBENZENE	UG/KG	BNA	620	U	440	U						
1,4-DICHLOROBENZENE	UG/KG	BNA	620	U	440	U						
2,4,5-TRICHLOROPHENOL	UG/KG	BNA	3000	U	2100	U						
2,4,6-TRICHLOROPHENOL	UG/KG	BNA	620	U	440	U						
2,4-DICHLOROPHENOL	UG/KG	BNA	620	U	440	U						
2,4-DIMETHYLPHENOL	UG/KG	BNA	620	U	440	U						
2,4-DINITROPHENOL	UG/KG	BNA	3000	U	2100	U						
2,4-DINITROTOLUENE	UG/KG	BNA	620	U	440	U						
2,6-DINITROTOLUENE	UG/KG	BNA	620	U	440	U						
2-CHLORONAPHTHALENE	UG/KG	BNA	620	U	440	U						
2-CHLOROPHENOL	UG/KG	BNA	620	U	440	U						
2-METHYLNAPHTHALENE	UG/KG	BNA	620	U	440	U						
2-METHYLPHENOL	UG/KG	BNA	620	U	440	U						
2-NITROANILINE	UG/KG	BNA	3000	U	2100	U						
2-NITROPHENOL	UG/KG	BNA	620	U	440	U						
3,3'-DICHLOROBENZIDINE	UG/KG	BNA	1200	U	880	U						
3-NITROANILINE	UG/KG	BNA	3000	U	2100	U						
4,6-DINITRO-2-METHYLPHENOL	UG/KG	BNA	3000	U	2100	U						
4-BROMOPHENYL-PHENYLETHER	UG/KG	BNA	620	U	440	U						
4-CHLORO-3-METHYLPHENOL	UG/KG	BNA	620	U	440	U						
4-CHLOROANILINE	UG/KG	BNA	620	U	440	U						
4-CHLOROPHENYL-PHENYLETHER	UG/KG	BNA	620	U	440	U						
4-METHYLPHENOL	UG/KG	BNA	620	U	440	U						
4-NITROANILINE	UG/KG	BNA	3000	U	2100	U						
4-NITROPHENOL	UG/KG	BNA	3000	U	2100	U						
ACENAPHTHENE	UG/KG	BNA	620	U	440	U						
ACENAPHTHYLENE	UG/KG	BNA	620	U	440	U						
ANTHRACENE	UG/KG	BNA	620	U	440	U						
BENZO(A)ANTHRACENE	UG/KG	BNA	620	U	440	U						
BENZO(A)PYRENE	UG/KG	BNA	390	J	440	U						
BENZO(B)FLUORANTHENE	UG/KG	BNA	620	U	440	U						
BENZO(G,H,I)PERYLENE	UG/KG	BNA	150	J	440	U						
BENZO(K)FLUORANTHENE	UG/KG	BNA	620	U	440	U						
BENZOIC ACID	UG/KG	BNA	160	J	2100	U						
BENZYL ALCOHOL	UG/KG	BNA	620	U	440	U						
BIS(2-CHLOROETHOXY)METHANE	UG/KG	BNA	620	U	440	U						
BIS(2-CHLOROETHYL)ETHER	UG/KG	BNA	620	U	440	U						
BIS(2-CHLOROISOPROPYL)ETHER	UG/KG	BNA	620	U	440	U						
BIS(2-ETHYLHEXYL)PHTHALATE	UG/KG	BNA	2600		440	U						
BUTYLBENZYLPHTHALATE	UG/KG	BNA	620	U	440	U						
CHRYSENE	UG/KG	BNA	420	J	440	U						
DI-N-BUTYLPHTHALATE	UG/KG	BNA	620	U	440	U						
DI-N-OCTYLPHTHALATE	UG/KG	BNA	620	U	440	U						
DIBENZ(A,H)ANTHRACENE	UG/KG	BNA	620	U	440	U						
DIBENZOFURAN	UG/KG	BNA	620	U	440	U						
DIETHYLPHTHALATE	UG/KG	BNA	620	U	440	U						
DIMETHYLPHTHALATE	UG/KG	BNA	620	U	440	U						
FLUORANTHENE	UG/KG	BNA	480	J	440	U						
FLUORENE	UG/KG	BNA	620	U	440	U						

NAVSTA-SAN DIEGO
SITE 4 WATER

		SAMPLE NUMBER:	NS4-SS2-S01		NS4-SS3-S01		NS4-TB-01/29/91		NS4-TB-02/11/91		NS4-TB-1/24/91	
		SAMPLING DATE:	02/12/91		02/12/91		01/29/91		02/11/91		01/24/91	
		BORING:	SS2		SS3		TB		TB		TB	
		SITE:	NS4		NS4		NS4		NS4		NS4	
		DEPTH:	NS4-SS2-S01		NS4-SS3-S01		NS4-TB-01/29/91		NS4-TB-02/11/91		NS4-TB-1/24/91	
COMPOUND NAME	UNITS	TEST CODE	RESULT	QUALIFIER	RESULT	QUALIFIER	RESULT	QUALIFIER	RESULT	QUALIFIER	RESULT	QUALIFIER
HEXACHLOROBENZENE	UG/KG	BNA	620	U	440	U						
HEXACHLOROBUTADIENE	UG/KG	BNA	620	U	440	U						
HEXACHLOROCYCLOPENTADIENE	UG/KG	BNA	620	U	440	U						
HEXACHLOROETHANE	UG/KG	BNA	620	U	440	U						
INDENO(1,2,3-C,D)PYRENE	UG/KG	BNA	620	U	440	U						
ISOPHORONE	UG/KG	BNA	620	U	440	U						
N-NITROSO-DI-N-PROPYLAMINE	UG/KG	BNA	620	U	440	U						
N-NITROSODIPHENYLAMINE (1)	UG/KG	BNA	620	U	440	U						
NAPHTHALENE	UG/KG	BNA	620	U	440	U						
NITROBENZENE	UG/KG	BNA	620	U	440	U						
PENTACHLOROPHENOL	UG/KG	BNA	3000	U	2100	U						
PHENANTHRENE	UG/KG	BNA	620	U	440	U						
PHENOL	UG/KG	BNA	620	U	440	U						
PYRENE	UG/KG	BNA	1200		440	U						
1,2,4-TRICHLOROBENZENE	UG/L	BNA										
1,2-DICHLOROBENZENE	UG/L	BNA										
1,3-DICHLOROBENZENE	UG/L	BNA										
1,4-DICHLOROBENZENE	UG/L	BNA										
2,4,5-TRICHLOROPHENOL	UG/L	BNA										
2,4,6-TRIBROMOPHENOL	UG/L	BNA										
2,4,6-TRICHLOROPHENOL	UG/L	BNA										
2,4-DICHLOROPHENOL	UG/L	BNA										
2,4-DIMETHYLPHENOL	UG/L	BNA										
2,4-DINITROPHENOL	UG/L	BNA										
2,4-DINITROTOLUENE	UG/L	BNA										
2,6-DINITROTOLUENE	UG/L	BNA										
2-CHLORONAPHTHALENE	UG/L	BNA										
2-CHLOROPHENOL	UG/L	BNA										
2-FLUOROBIPHENYL	UG/L	BNA										
2-FLUOROPHENOL	UG/L	BNA										
2-METHYLNAPHTHALENE	UG/L	BNA										
2-METHYLPHENOL	UG/L	BNA										
2-NITROANILINE	UG/L	BNA										
2-NITROPHENOL	UG/L	BNA										
3,3'-DICHLOROBENZIDINE	UG/L	BNA										
3-NITROANILINE	UG/L	BNA										
4,6-DINITRO-2-METHYLPHENOL	UG/L	BNA										
4-BROMOPHENYL-PHENYLETHER	UG/L	BNA										
4-CHLORO-3-METHYLPHENOL	UG/L	BNA										
4-CHLOROANILINE	UG/L	BNA										
4-CHLOROPHENYL-PHENYLETHER	UG/L	BNA										
4-METHYLPHENOL	UG/L	BNA										
4-NITROANILINE	UG/L	BNA										
4-NITROPHENOL	UG/L	BNA										
ACENAPHTHENE	UG/L	BNA										
ACENAPHTHYLENE	UG/L	BNA										
ANTHRACENE	UG/L	BNA										
BENZO(A)ANTHRACENE	UG/L	BNA										
BENZO(A)PYRENE	UG/L	BNA										
BENZO(B)FLUORANTHENE	UG/L	BNA										
BENZO(G,H,I)PERYLENE	UG/L	BNA										

NAVSTA-SAN DIEGO
SITE 4 WATER

		SAMPLE NUMBER:	NS4-SS2-S01		NS4-SS3-S01		NS4-TB-01/29/91		NS4-TB-02/11/91		NS4-TB-1/24/91	
		SAMPLING DATE:	02/12/91		02/12/91		01/29/91		02/11/91		01/24/91	
		BORING:	SS2		SS3		TB		TB		TB	
		SITE:	NS4		NS4		NS4		NS4		NS4	
		DEPTH:	NS4-SS2-S01		NS4-SS3-S01		NS4-TB-01/29/91		NS4-TB-02/11/91		NS4-TB-1/24/91	
COMPOUND NAME	UNITS	TEST CODE	RESULT	QUALIFIER	RESULT	QUALIFIER	RESULT	QUALIFIER	RESULT	QUALIFIER	RESULT	QUALIFIER
BENZO(K)FLUORANTHENE	UG/L	BNA										
BENZOIC ACID	UG/L	BNA										
BENZYL ALCOHOL	UG/L	BNA										
BIS(2-CHLOROETHOXY)METHANE	UG/L	BNA										
BIS(2-CHLOROETHYL)ETHER	UG/L	BNA										
BIS(2-CHLOROISOPROPYL)ETHER	UG/L	BNA										
BIS(2-ETHYLHEXYL)PHTHALATE	UG/L	BNA										
BUTYLBENZYLPHTHALATE	UG/L	BNA										
CHRYSENE	UG/L	BNA										
DI-N-BUTYLPHTHALATE	UG/L	BNA										
DI-N-OCTYLPHTHALATE	UG/L	BNA										
DIBENZ(A,H)ANTHRACENE	UG/L	BNA										
DIBENZO(A,H)ANTHRACENE	UG/L	BNA										
DIBENZOFURAN	UG/L	BNA										
DIETHYLPHTHALATE	UG/L	BNA										
DIMETHYLPHTHALATE	UG/L	BNA										
FLUORANTHENE	UG/L	BNA										
FLUORENE	UG/L	BNA										
HEXACHLOROBENZENE	UG/L	BNA										
HEXACHLOROBUTADIENE	UG/L	BNA										
HEXACHLOROCYCLOPENTADIENE	UG/L	BNA										
HEXACHLOROETHANE	UG/L	BNA										
INDENO(1,2,3-C,D)PYRENE	UG/L	BNA										
ISOPHORONE	UG/L	BNA										
N-NITROSO-DI-N-PROPYLAMINE	UG/L	BNA										
N-NITROSODIPHENYLAMINE (1)	UG/L	BNA										
NAPHTHALENE	UG/L	BNA										
NITROBENZENE	UG/L	BNA										
NITROBENZENE-D5	UG/L	BNA										
PENTACHLOROPHENOL	UG/L	BNA										
PHENANTHRENE	UG/L	BNA										
PHENOL	UG/L	BNA										
PHENOL-D5	UG/L	BNA										
PYRENE	UG/L	BNA										
TERPHENYL-D14	UG/L	BNA										
ANTIMONY	MG/KG	CAC METALS	6.8	U	5.0	U						
ARSENIC	MG/KG	CAC METALS	12.9		2.4	B						
BARIUM	MG/KG	CAC METALS	291		75.8							
BERYLLIUM	MG/KG	CAC METALS	4.5		2.7							
CADMIUM	MG/KG	CAC METALS	3.9		1.0	U						
CHROMIUM	MG/KG	CAC METALS	51.0		19.1							
COBALT	MG/KG	CAC METALS	16.1	B	8.3	B						
COPPER	MG/KG	CAC METALS	466		28.4	U						
LEAD	MG/KG	CAC METALS	267		11.4							
MERCURY	MG/KG	CAC METALS	0.79		0.20	U						
MOLYBDENUM	MG/KG	CAC METALS	3.7	B	1.8	U						
NICKEL	MG/KG	CAC METALS	26.1		4.8	B						
SELENIUM	MG/KG	CAC METALS	0.36	U	0.52	U						
SILVER	MG/KG	CAC METALS	3.4	B	1.5	U						
THALLIUM	MG/KG	CAC METALS	0.36	U	0.26	U						
VANADIUM	MG/KG	CAC METALS	92.0		55.0							

NAVSTA-SAN DIEGO
SITE 4 WATER

		SAMPLE NUMBER:	NS4-SS2-S01		NS4-SS3-S01		NS4-TB-01/29/91		NS4-TB-02/11/91		NS4-TB-1/24/91	
		SAMPLING DATE:	02/12/91		02/12/91		01/29/91		02/11/91		01/24/91	
		BORING:	SS2		SS3		TB		TB		TB	
		SITE:	NS4		NS4		NS4		NS4		NS4	
		DEPTH:	NS4-SS2-S01		NS4-SS3-S01		NS4-TB-01/29/91		NS4-TB-02/11/91		NS4-TB-1/24/91	
COMPOUND NAME	UNITS	TEST CODE	RESULT	QUALIFIER	RESULT	QUALIFIER	RESULT	QUALIFIER	RESULT	QUALIFIER	RESULT	QUALIFIER
ZINC	MG/KG	CAC METALS	727		57.7	U						
ANTIMONY	UG/KG	CAC METALS										
ARSENIC	UG/KG	CAC METALS										
BARIUM	UG/KG	CAC METALS										
BERYLLIUM	UG/KG	CAC METALS										
CADMIUM	UG/KG	CAC METALS										
CHROMIUM	UG/KG	CAC METALS										
COBALT	UG/KG	CAC METALS										
COPPER	UG/KG	CAC METALS										
LEAD	UG/KG	CAC METALS										
MERCURY	UG/KG	CAC METALS										
MOLYBDENUM	UG/KG	CAC METALS										
NICKEL	UG/KG	CAC METALS										
SELENIUM	UG/KG	CAC METALS										
SILVER	UG/KG	CAC METALS										
THALLIUM	UG/KG	CAC METALS										
VANADIUM	UG/KG	CAC METALS										
ZINC	UG/KG	CAC METALS										
ANTIMONY	UG/L	CAC METALS										
ARSENIC	UG/L	CAC METALS										
BARIUM	UG/L	CAC METALS										
BERYLLIUM	UG/L	CAC METALS										
CADMIUM	UG/L	CAC METALS										
CHROMIUM	UG/L	CAC METALS										
COBALT	UG/L	CAC METALS										
COPPER	UG/L	CAC METALS										
LEAD	UG/L	CAC METALS										
MERCURY	UG/L	CAC METALS										
MOLYBDENUM	UG/L	CAC METALS										
NICKEL	UG/L	CAC METALS										
SELENIUM	UG/L	CAC METALS										
SILVER	UG/L	CAC METALS										
THALLIUM	UG/L	CAC METALS										
VANADIUM	UG/L	CAC METALS										
ZINC	UG/L	CAC METALS										
CAC WET EXTRACTION	DATE	CAC WET EX										
COPPER	MG/L	CAC WET EX	0.374									
LEAD	MG/L	CAC WET EX	6.26									
TOTAL CYANIDE	MG/KG	CN										
TOTAL CYANIDE	MG/L	CN										
4,4'-DDD	UG/KG	PEST / PCB	30	U	21	U						
4,4'-DDE	UG/KG	PEST / PCB	30	U	21	U						
4,4'-DDT	UG/KG	PEST / PCB	30	U	21	U						
ALDRIN	UG/KG	PEST / PCB	15	U	11	U						
ALPHA-BHC	UG/KG	PEST / PCB	15	U	11	U						
ALPHA-CHLORDANE	UG/KG	PEST / PCB	150	U	110	U						
BETA-BHC	UG/KG	PEST / PCB	15	U	11	U						
DELTA-BHC	UG/KG	PEST / PCB	15	U	11	U						
DIBUTYL CHLORENDATE	UG/KG	PEST / PCB	30		72							
DIELDRIN	UG/KG	PEST / PCB	30	U	21	U						
ENDOSULFAN I	UG/KG	PEST / PCB	15	U	11	U						

NAVSTA-SAN DIEGO
SITE 4 WATER

		SAMPLE NUMBER:	NS4-SS2-S01		NS4-SS3-S01		NS4-TB-01/29/91		NS4-TB-02/11/91		NS4-TB-1/24/91	
		SAMPLING DATE:	02/12/91		02/12/91		01/29/91		02/11/91		01/24/91	
		BORING:	SS2		SS3		TB		TB		TB	
		SITE:	NS4		NS4		NS4		NS4		NS4	
		DEPTH:	NS4-SS2-S01		NS4-SS3-S01		NS4-TB-01/29/91		NS4-TB-02/11/91		NS4-TB-1/24/91	
COMPOUND NAME	UNITS	TEST CODE	RESULT	QUALIFIER	RESULT	QUALIFIER	RESULT	QUALIFIER	RESULT	QUALIFIER	RESULT	QUALIFIER
ENDOSULFAN II	UG/KG	PEST / PCB	30	U	21	U						
ENDOSULFAN SULFATE	UG/KG	PEST / PCB	30	U	21	U						
ENDRIN	UG/KG	PEST / PCB	30	U	21	U						
ENDRIN KETONE	UG/KG	PEST / PCB	30	U	21	U						
GAMMA-BHC (LINDANE)	UG/KG	PEST / PCB	15	U	11	U						
GAMMA-CHLORDANE	UG/KG	PEST / PCB	150	U	110	U						
HEPTACHLOR	UG/KG	PEST / PCB	15	U	11	U						
HEPTACHLOR EPOXIDE	UG/KG	PEST / PCB	15	U	11	U						
METHOXYCHLOR	UG/KG	PEST / PCB	150	U	110	U						
PCB-1016	UG/KG	PEST / PCB	150	U	110	U						
PCB-1221	UG/KG	PEST / PCB	150	U	110	U						
PCB-1232	UG/KG	PEST / PCB	150	U	110	U						
PCB-1242	UG/KG	PEST / PCB	150	U	110	U						
PCB-1248	UG/KG	PEST / PCB	150	U	110	U						
PCB-1254	UG/KG	PEST / PCB	300	U	210	U						
PCB-1260	UG/KG	PEST / PCB	300	U	210	U						
TOXAPHENE	UG/KG	PEST / PCB	300	U	210	U						
4,4'-DDD	UG/L	PEST / PCB										
4,4'-DDE	UG/L	PEST / PCB										
4,4'-DDT	UG/L	PEST / PCB										
ALDRIN	UG/L	PEST / PCB										
ALPHA-BHC	UG/L	PEST / PCB										
ALPHA-CHLORDANE	UG/L	PEST / PCB										
BETA-BHC	UG/L	PEST / PCB										
DELTA-BHC	UG/L	PEST / PCB										
DIBUTYL CHLORENDATE	UG/L	PEST / PCB										
DIELDRIN	UG/L	PEST / PCB										
ENDOSULFAN I	UG/L	PEST / PCB										
ENDOSULFAN II	UG/L	PEST / PCB										
ENDOSULFAN SULFATE	UG/L	PEST / PCB										
ENDRIN	UG/L	PEST / PCB										
ENDRIN KETONE	UG/L	PEST / PCB										
GAMMA-BHC (LINDANE)	UG/L	PEST / PCB										
GAMMA-CHLORDANE	UG/L	PEST / PCB										
HEPTACHLOR	UG/L	PEST / PCB										
HEPTACHLOR EPOXIDE	UG/L	PEST / PCB										
METHOXYCHLOR	UG/L	PEST / PCB										
PCB-1016	UG/L	PEST / PCB										
PCB-1221	UG/L	PEST / PCB										
PCB-1232	UG/L	PEST / PCB										
PCB-1242	UG/L	PEST / PCB										
PCB-1248	UG/L	PEST / PCB										
PCB-1254	UG/L	PEST / PCB										
PCB-1260	UG/L	PEST / PCB										
TOXAPHENE	UG/L	PEST / PCB										
DIESEL	MG/KG	TPHC										
JP4	MG/KG	TPHC										
JP5	MG/KG	TPHC										
STODDARD	MG/KG	TPHC	10	U	10	U						
DIESEL	UG/KG	TPHC										
JP4	UG/KG	TPHC										

NAVSTA-SAN DIEGO
SITE 4 WATER

		SAMPLE NUMBER:	NS4-SS2-S01		NS4-SS3-S01		NS4-TB-01/29/91		NS4-TB-02/11/91		NS4-TB-1/24/91	
		SAMPLING DATE:	02/12/91		02/12/91		01/29/91		02/11/91		01/24/91	
		BORING:	SS2		SS3		TB		TB		TB	
		SITE:	NS4		NS4		NS4		NS4		NS4	
		DEPTH:	NS4-SS2-S01		NS4-SS3-S01		NS4-TB-01/29/91		NS4-TB-02/11/91		NS4-TB-1/24/91	
COMPOUND NAME	UNITS	TEST CODE	RESULT	QUALIFIER	RESULT	QUALIFIER	RESULT	QUALIFIER	RESULT	QUALIFIER	RESULT	QUALIFIER
JP5	UG/KG	TPHC										
STODDARD	UG/KG	TPHC										
BENZO(A)PYRENE	UG/L	TPHC										
STODDARD	UG/L	TPHC										
1,1,1-TRICHLOROETHANE	UG/KG	VOA	9	U	7	U	5	U	5	U	5	U
1,1,2,2-TETRACHLOROETHANE	UG/KG	VOA	9	U	7	U	5	U	5	U	5	U
1,1,2-TRICHLOROETHANE	UG/KG	VOA	9	U	7	U	5	U	5	U	5	U
1,1-DICHLOROETHANE	UG/KG	VOA	9	U	7	U	5	U	5	U	5	U
1,1-DICHLOROETHENE	UG/KG	VOA	9	U	7	U	5	U	5	U	5	U
1,2-DICHLOROETHANE	UG/KG	VOA	9	U	7	U	5	U	5	U	5	U
1,2-DICHLOROETHENE (TOTAL)	UG/KG	VOA	9	U	7	U	5	U	5	U	5	U
1,2-DICHLOROPROPANE	UG/KG	VOA	9	U	7	U	5	U	5	U	5	U
2-BUTANONE	UG/KG	VOA	19	U	13	U	10	U	10	U	10	U
2-HEXANONE	UG/KG	VOA	19	U	13	U	10	U	10	U	10	U
4-METHYL-2-PENTANONE	UG/KG	VOA	19	U	13	U	10	U	10	U	10	U
ACETONE	UG/KG	VOA	40	U	13	U	10	U	6	BJ	10	U
BENZENE	UG/KG	VOA	9	U	7	U	5	U	5	U	5	U
BROMODICHLOROMETHANE	UG/KG	VOA	9	U	7	U	5	U	5	U	5	U
BROMOFORM	UG/KG	VOA	9	U	7	U	5	U	5	U	5	U
BROMOMETHANE	UG/KG	VOA	19	U	13	U	10	U	10	U	10	U
CARBON DISULFIDE	UG/KG	VOA	9	U	7	U	5	U	5	U	5	U
CARBON TETRACHLORIDE	UG/KG	VOA	9	U	7	U	5	U	5	U	5	U
CHLOROBENZENE	UG/KG	VOA	9	U	7	U	5	U	5	U	5	U
CHLOROETHANE	UG/KG	VOA	19	U	13	U	10	U	10	U	10	U
CHLOROFORM	UG/KG	VOA	9	U	7	U	5	U	1	J	5	U
CHLOROMETHANE	UG/KG	VOA	19	U	13	U	10	U	10	U	10	U
CIS-1,3-DICHLOROPROPENE	UG/KG	VOA	9	U	7	U	5	U	5	U	5	U
DIBROMOCHLOROMETHANE	UG/KG	VOA	9	U	7	U	5	U	5	U	5	U
ETHYLBENZENE	UG/KG	VOA	9	U	7	U	5	U	5	U	5	U
METHYLENE CHLORIDE	UG/KG	VOA	10	U	11	U	6	B	4	BJ	4	BJ
STYRENE	UG/KG	VOA	9	U	7	U	5	U	5	U	5	U
TETRACHLOROETHENE	UG/KG	VOA	9	U	7	U	5	U	5	U	5	U
TOLUENE	UG/KG	VOA	9	U	7	U	5	U	5	U	5	U
TRANS-1,3-DICHLOROPROPENE	UG/KG	VOA	9	U	7	U	5	U	5	U	5	U
TRICHLOROETHENE	UG/KG	VOA	9	U	7	U	5	U	5	U	5	U
VINYL ACETATE	UG/KG	VOA	19	U	13	U	10	U	10	U	10	U
VINYL CHLORIDE	UG/KG	VOA	19	U	13	U	10	U	10	U	10	U
XYLENES (TOTAL)	UG/KG	VOA	9	U	7	U	5	U	5	U	5	U
1,1,1-TRICHLOROETHANE	UG/L	VOA										
1,1,2,2-TETRACHLOROETHANE	UG/L	VOA										
1,1,2-TRICHLOROETHANE	UG/L	VOA										
1,1-DICHLOROETHANE	UG/L	VOA										
1,1-DICHLOROETHENE	UG/L	VOA										
1,2-DICHLOROETHANE	UG/L	VOA										
1,2-DICHLOROETHANE-D4	UG/L	VOA										
1,2-DICHLOROETHENE (TOTAL)	UG/L	VOA										
1,2-DICHLOROPROPANE	UG/L	VOA										
2-BUTANONE	UG/L	VOA										
2-HEXANONE	UG/L	VOA										
4-METHYL-2-PENTANONE	UG/L	VOA										
ACETONE	UG/L	VOA										

NAVSTA-SAN DIEGO
SITE 4 WATER

		SAMPLE NUMBER:	NS4-SS2-S01		NS4-SS3-S01		NS4-TB-01/29/91		NS4-TB-02/11/91		NS4-TB-1/24/91	
		SAMPLING DATE:	02/12/91		02/12/91		01/29/91		02/11/91		01/24/91	
		BORING:	SS2		SS3		TB		TB		TB	
		SITE:	NS4		NS4		NS4		NS4		NS4	
		DEPTH:	NS4-SS2-S01		NS4-SS3-S01		NS4-TB-01/29/91		NS4-TB-02/11/91		NS4-TB-1/24/91	
COMPOUND NAME	UNITS	TEST CODE	RESULT	QUALIFIER	RESULT	QUALIFIER	RESULT	QUALIFIER	RESULT	QUALIFIER	RESULT	QUALIFIER
BENZENE	UG/L	VOA										
BROMODICHLOROMETHANE	UG/L	VOA										
BROMOFLUOROBENZENE	UG/L	VOA										
BROMOFORM	UG/L	VOA										
BROMOMETHANE	UG/L	VOA										
CARBON DISULFIDE	UG/L	VOA										
CARBON TETRACHLORIDE	UG/L	VOA										
CHLOROBENZENE	UG/L	VOA										
CHLOROETHANE	UG/L	VOA										
CHLOROFORM	UG/L	VOA										
CHLOROMETHANE	UG/L	VOA										
CIS-1,3-DICHLOROPROPENE	UG/L	VOA										
DIBROMOCHLOROMETHANE	UG/L	VOA										
ETHYLBENZENE	UG/L	VOA										
METHYLENE CHLORIDE	UG/L	VOA										
STYRENE	UG/L	VOA										
TETRACHLOROETHENE	UG/L	VOA										
TOLUENE	UG/L	VOA										
TOLUENE-D8	UG/L	VOA										
TRANS-1,3-DICHLOROPROPENE	UG/L	VOA										
TRICHLOROETHENE	UG/L	VOA										
VINYL ACETATE	UG/L	VOA										
VINYL CHLORIDE	UG/L	VOA										
XYLENES (TOTAL)	UG/L	VOA										

NAVSTA-SAN DIEGO
SITE 4 WATER

		SAMPLE NUMBER:	NS4-TB-1/25/91		NS4-WAER		NS4-WAER-1/25/91	
		SAMPLING DATE:	01/25/91		01/24/91		01/25/91	
		BORING:	TB				WAER	
		SITE:	NS4		NS4		NS4	
		DEPTH:	NS4-TB-1/25/91		NS4-WAER		NS4-WAER-1/25/91	
COMPOUND NAME	UNITS	TEST CODE	RESULT	QUALIFIER	RESULT	QUALIFIER	RESULT	QUALIFIER
1,2,4-TRICHLOROBENZENE	UG/KG	BNA			10	U	10	U
1,2-DICHLOROBENZENE	UG/KG	BNA			10	U	10	U
1,3-DICHLOROBENZENE	UG/KG	BNA			10	U	10	U
1,4-DICHLOROBENZENE	UG/KG	BNA			10	U	10	U
2,4,5-TRICHLOROPHENOL	UG/KG	BNA			50	U	50	U
2,4,6-TRICHLOROPHENOL	UG/KG	BNA			10	U	10	U
2,4-DICHLOROPHENOL	UG/KG	BNA			10	U	10	U
2,4-DIMETHYLPHENOL	UG/KG	BNA			10	U	10	U
2,4-DINITROPHENOL	UG/KG	BNA			50	U	50	U
2,4-DINITROTOLUENE	UG/KG	BNA			10	U	10	U
2,6-DINITROTOLUENE	UG/KG	BNA			10	U	10	U
2-CHLORONAPHTHALENE	UG/KG	BNA			10	U	10	U
2-CHLOROPHENOL	UG/KG	BNA			10	U	10	U
2-METHYLNAPHTHALENE	UG/KG	BNA			10	U	10	U
2-METHYLPHENOL	UG/KG	BNA			10	U	10	U
2-NITROANILINE	UG/KG	BNA			50	U	50	U
2-NITROPHENOL	UG/KG	BNA			10	U	10	U
3,3'-DICHLOROBENZIDINE	UG/KG	BNA			20	U	20	U
3-NITROANILINE	UG/KG	BNA			50	U	50	U
4,6-DINITRO-2-METHYLPHENOL	UG/KG	BNA			50	U	50	U
4-BROMOPHENYL-PHENYLETHER	UG/KG	BNA			10	U	10	U
4-CHLORO-3-METHYLPHENOL	UG/KG	BNA			10	U	10	U
4-CHLOROANILINE	UG/KG	BNA			10	U	10	U
4-CHLOROPHENYL-PHENYLETHER	UG/KG	BNA			10	U	10	U
4-METHYLPHENOL	UG/KG	BNA			10	U	10	U
4-NITROANILINE	UG/KG	BNA			50	U	50	U
4-NITROPHENOL	UG/KG	BNA			50	U	50	U
ACENAPHTHENE	UG/KG	BNA			10	U	10	U
ACENAPHTHYLENE	UG/KG	BNA			10	U	10	U
ANTHRACENE	UG/KG	BNA			10	U	10	U
BENZO(A)ANTHRACENE	UG/KG	BNA			10	U	10	U
BENZO(A)PYRENE	UG/KG	BNA			10	U	10	U
BENZO(B)FLUORANTHENE	UG/KG	BNA			10	U	10	U
BENZO(G,H,I)PERYLENE	UG/KG	BNA			10	U	10	U
BENZO(K)FLUORANTHENE	UG/KG	BNA			10	U	10	U
BENZOIC ACID	UG/KG	BNA			50	U	50	U
BENZYL ALCOHOL	UG/KG	BNA			10	U	10	U
BIS(2-CHLOROETHOXY)METHANE	UG/KG	BNA			10	U	10	U
BIS(2-CHLOROETHYL)ETHER	UG/KG	BNA			10	U	10	U
BIS(2-CHLOROISOPROPYL)ETHER	UG/KG	BNA			10	U	10	U
BIS(2-ETHYLHEXYL)PHTHALATE	UG/KG	BNA			10	U	10	U
BUTYLBENZYLPHTHALATE	UG/KG	BNA			10	U	10	U
CHRYSENE	UG/KG	BNA			10	U	10	U
DI-N-BUTYLPHTHALATE	UG/KG	BNA			10	U	10	U
DI-N-OCTYLPHTHALATE	UG/KG	BNA			10	U	10	U
DIBENZ(A,H)ANTHRACENE	UG/KG	BNA			10	U	10	U
DIBENZOFURAN	UG/KG	BNA			10	U	10	U
DIETHYLPHTHALATE	UG/KG	BNA			10	U	10	U
DIMETHYLPHTHALATE	UG/KG	BNA			10	U	10	U
FLUORANTHENE	UG/KG	BNA			10	U	10	U
FLUORENE	UG/KG	BNA			10	U	10	U

NAVSTA-SAN DIEGO
SITE 4 WATER

		SAMPLE NUMBER:	NS4-TB-1/25/91		NS4-WAER		NS4-WAER-1/25/91	
		SAMPLING DATE:	01/25/91		01/24/91		01/25/91	
		BORING:	TB				WAER	
		SITE:	NS4		NS4		NS4	
		DEPTH:	NS4-TB-1/25/91		NS4-WAER		NS4-WAER-1/25/91	
COMPOUND NAME	UNITS	TEST CODE	RESULT	QUALIFIER	RESULT	QUALIFIER	RESULT	QUALIFIER
HEXACHLOROBENZENE	UG/KG	BNA			10	U	10	U
HEXACHLOROBUTADIENE	UG/KG	BNA			10	U	10	U
HEXACHLOROCYCLOPENTADIENE	UG/KG	BNA			10	U	10	U
HEXACHLOROETHANE	UG/KG	BNA			10	U	10	U
INDENO(1,2,3-C,D)PYRENE	UG/KG	BNA			10	U	10	U
ISOPHORONE	UG/KG	BNA			10	U	10	U
N-NITROSO-DI-N-PROPYLAMINE	UG/KG	BNA			10	U	10	U
N-NITROSODIPHENYLAMINE (1)	UG/KG	BNA			10	U	10	U
NAPHTHALENE	UG/KG	BNA			10	U	10	U
NITROBENZENE	UG/KG	BNA			10	U	10	U
PENTACHLOROPHENOL	UG/KG	BNA			50	U	50	U
PHENANTHRENE	UG/KG	BNA			10	U	10	U
PHENOL	UG/KG	BNA			10	U	10	U
PYRENE	UG/KG	BNA			10	U	10	U
1,2,4-TRICHLOROBENZENE	UG/L	BNA						
1,2-DICHLOROBENZENE	UG/L	BNA						
1,3-DICHLOROBENZENE	UG/L	BNA						
1,4-DICHLOROBENZENE	UG/L	BNA						
2,4,5-TRICHLOROPHENOL	UG/L	BNA						
2,4,6-TRIBROMOPHENOL	UG/L	BNA						
2,4,6-TRICHLOROPHENOL	UG/L	BNA						
2,4-DICHLOROPHENOL	UG/L	BNA						
2,4-DIMETHYLPHENOL	UG/L	BNA						
2,4-DINITROPHENOL	UG/L	BNA						
2,4-DINITROTOLUENE	UG/L	BNA						
2,6-DINITROTOLUENE	UG/L	BNA						
2-CHLORONAPHTHALENE	UG/L	BNA						
2-CHLOROPHENOL	UG/L	BNA						
2-FLUOROBIPHENYL	UG/L	BNA						
2-FLUOROPHENOL	UG/L	BNA						
2-METHYLNAPHTHALENE	UG/L	BNA						
2-METHYLPHENOL	UG/L	BNA						
2-NITROANILINE	UG/L	BNA						
2-NITROPHENOL	UG/L	BNA						
3,3'-DICHLOROBENZIDINE	UG/L	BNA						
3-NITROANILINE	UG/L	BNA						
4,6-DINITRO-2-METHYLPHENOL	UG/L	BNA						
4-BROMOPHENYL-PHENYLETHER	UG/L	BNA						
4-CHLORO-3-METHYLPHENOL	UG/L	BNA						
4-CHLOROANILINE	UG/L	BNA						
4-CHLOROPHENYL-PHENYLETHER	UG/L	BNA						
4-METHYLPHENOL	UG/L	BNA						
4-NITROANILINE	UG/L	BNA						
4-NITROPHENOL	UG/L	BNA						
ACENAPHTHENE	UG/L	BNA						
ACENAPHTHYLENE	UG/L	BNA						
ANTHRACENE	UG/L	BNA						
BENZO(A)ANTHRACENE	UG/L	BNA						
BENZO(A)PYRENE	UG/L	BNA						
BENZO(B)FLUORANTHENE	UG/L	BNA						
BENZO(G,H,I)PERYLENE	UG/L	BNA						

NAVSTA-SAN DIEGO
SITE 4 WATER

		SAMPLE NUMBER:	NS4-TB-1/25/91		NS4-WAER		NS4-WAER-1/25/91	
		SAMPLING DATE:	01/25/91		01/24/91		01/25/91	
		BORING:	TB				WAER	
		SITE:	NS4		NS4		NS4	
		DEPTH:	NS4-TB-1/25/91		NS4-WAER		NS4-WAER-1/25/91	
COMPOUND NAME	UNITS	TEST CODE	RESULT	QUALIFIER	RESULT	QUALIFIER	RESULT	QUALIFIER
BENZO(K)FLUORANTHENE	UG/L	BNA						
BENZOIC ACID	UG/L	BNA						
BENZYL ALCOHOL	UG/L	BNA						
BIS(2-CHLOROETHOXY)METHANE	UG/L	BNA						
BIS(2-CHLOROETHYL)ETHER	UG/L	BNA						
BIS(2-CHLOROISOPROPYL)ETHER	UG/L	BNA						
BIS(2-ETHYLHEXYL)PHTHALATE	UG/L	BNA						
BUTYLBENZYLPHTHALATE	UG/L	BNA						
CHRYSENE	UG/L	BNA						
DI-N-BUTYLPHTHALATE	UG/L	BNA						
DI-N-OCTYLPHTHALATE	UG/L	BNA						
DIBENZ(A,H)ANTHRACENE	UG/L	BNA						
DIBENZO(A,H)ANTHRACENE	UG/L	BNA						
DIBENZOFURAN	UG/L	BNA						
DIETHYLPHTHALATE	UG/L	BNA						
DIMETHYLPHTHALATE	UG/L	BNA						
FLUORANTHENE	UG/L	BNA						
FLUORENE	UG/L	BNA						
HEXACHLOROBENZENE	UG/L	BNA						
HEXACHLOROBUTADIENE	UG/L	BNA						
HEXACHLOROCYCLOPENTADIENE	UG/L	BNA						
HEXACHLOROETHANE	UG/L	BNA						
INDENO(1,2,3-C,D)PYRENE	UG/L	BNA						
ISOPHORONE	UG/L	BNA						
N-NITROSO-DI-N-PROPYLAMINE	UG/L	BNA						
N-NITROSODIPHENYLAMINE (1)	UG/L	BNA						
NAPHTHALENE	UG/L	BNA						
NITROBENZENE	UG/L	BNA						
NITROBENZENE-D5	UG/L	BNA						
PENTACHLOROPHENOL	UG/L	BNA						
PHENANTHRENE	UG/L	BNA						
PHENOL	UG/L	BNA						
PHENOL-D5	UG/L	BNA						
PYRENE	UG/L	BNA						
TERPHENYL-D14	UG/L	BNA						
ANTIMONY	MG/KG	CAC METALS						
ARSENIC	MG/KG	CAC METALS						
BARIUM	MG/KG	CAC METALS						
BERYLLIUM	MG/KG	CAC METALS						
CADMIUM	MG/KG	CAC METALS						
CHROMIUM	MG/KG	CAC METALS						
COBALT	MG/KG	CAC METALS						
COPPER	MG/KG	CAC METALS						
LEAD	MG/KG	CAC METALS						
MERCURY	MG/KG	CAC METALS						
MOLYBDENUM	MG/KG	CAC METALS						
NICKEL	MG/KG	CAC METALS						
SELENIUM	MG/KG	CAC METALS						
SILVER	MG/KG	CAC METALS						
THALLIUM	MG/KG	CAC METALS						
VANADIUM	MG/KG	CAC METALS						

NAVSTA-SAN DIEGO
SITE 4 WATER

		SAMPLE NUMBER:	NS4-TB-1/25/91		NS4-WAER		NS4-WAER-1/25/91	
		SAMPLING DATE:	01/25/91		01/24/91		01/25/91	
		BORING:	TB				WAER	
		SITE:	NS4		NS4		NS4	
		DEPTH:	NS4-TB-1/25/91		NS4-WAER		NS4-WAER-1/25/91	
COMPOUND NAME	UNITS	TEST CODE	RESULT	QUALIFIER	RESULT	QUALIFIER	RESULT	QUALIFIER
ZINC	MG/KG	CAC METALS						
ANTIMONY	UG/KG	CAC METALS			19.0	U	19.0	U
ARSENIC	UG/KG	CAC METALS			1.0	U	1.0	U
BARIUM	UG/KG	CAC METALS			10.6	B	8.0	B
BERYLLIUM	UG/KG	CAC METALS			1.0	U	1.0	U
CADMIUM	UG/KG	CAC METALS			4.0	U	4.0	U
CHROMIUM	UG/KG	CAC METALS			4.0	U	4.0	U
COBALT	UG/KG	CAC METALS			5.0	U	5.0	U
COPPER	UG/KG	CAC METALS			24.7	B	14.1	B
LEAD	UG/KG	CAC METALS			2.5	B	3.2	
MERCURY	UG/KG	CAC METALS			0.20	U	0.20	U
MOLYBDENUM	UG/KG	CAC METALS			7.0	U	7.0	B
NICKEL	UG/KG	CAC METALS			9.0	U	9.0	U
SELENIUM	UG/KG	CAC METALS			2.0	U	2.0	U
SILVER	UG/KG	CAC METALS			5.8	B	5.8	B
THALLIUM	UG/KG	CAC METALS			1.0	U	1.0	U
VANADIUM	UG/KG	CAC METALS			4.2	B	4.2	B
ZINC	UG/KG	CAC METALS			220		207	
ANTIMONY	UG/L	CAC METALS						
ARSENIC	UG/L	CAC METALS						
BARIUM	UG/L	CAC METALS						
BERYLLIUM	UG/L	CAC METALS						
CADMIUM	UG/L	CAC METALS						
CHROMIUM	UG/L	CAC METALS						
COBALT	UG/L	CAC METALS						
COPPER	UG/L	CAC METALS						
LEAD	UG/L	CAC METALS						
MERCURY	UG/L	CAC METALS						
MOLYBDENUM	UG/L	CAC METALS						
NICKEL	UG/L	CAC METALS						
SELENIUM	UG/L	CAC METALS						
SILVER	UG/L	CAC METALS						
THALLIUM	UG/L	CAC METALS						
VANADIUM	UG/L	CAC METALS						
ZINC	UG/L	CAC METALS						
CAC WET EXTRACTION	DATE	CAC WET EX						
COPPER	MG/L	CAC WET EX						
LEAD	MG/L	CAC WET EX						
TOTAL CYANIDE	MG/KG	CN						
TOTAL CYANIDE	MG/L	CN			0.02	UJ	0.02	U
4,4'-DDD	UG/KG	PEST / PCB			0.1	U	0.1	U
4,4'-DDE	UG/KG	PEST / PCB			0.1	U	0.1	U
4,4'-DDT	UG/KG	PEST / PCB			0.1	U	0.1	U
ALDRIN	UG/KG	PEST / PCB			0.05	U	0.05	U
ALPHA-BHC	UG/KG	PEST / PCB			0.05	U	0.05	U
ALPHA-CHLORDANE	UG/KG	PEST / PCB			0.5	U	0.05	U
BETA-BHC	UG/KG	PEST / PCB			0.05	U	0.05	U
DELTA-BHC	UG/KG	PEST / PCB			0.05	U	0.05	U
DIBUTYL CHLORENDATE	UG/KG	PEST / PCB			68		74	
DIELDRIN	UG/KG	PEST / PCB			0.1	U	0.1	U
ENDOSULFAN I	UG/KG	PEST / PCB			0.05	U	0.05	U

NAVSTA-SAN DIEGO
SITE 4 WATER

		SAMPLE NUMBER:	NS4-TB-1/25/91		NS4-WAER		NS4-WAER-1/25/91	
		SAMPLING DATE:	01/25/91		01/24/91		01/25/91	
		BORING:	TB				WAER	
		SITE:	NS4		NS4		NS4	
		DEPTH:	NS4-TB-1/25/91		NS4-WAER		NS4-WAER-1/25/91	
COMPOUND NAME	UNITS	TEST CODE	RESULT	QUALIFIER	RESULT	QUALIFIER	RESULT	QUALIFIER
ENDOSULFAN II	UG/KG	PEST / PCB			0.1	U	0.1	U
ENDOSULFAN SULFATE	UG/KG	PEST / PCB			0.1	U	0.1	U
ENDRIN	UG/KG	PEST / PCB			0.1	U	0.1	U
ENDRIN KETONE	UG/KG	PEST / PCB			0.1	U	0.1	U
GAMMA-BHC (LINDANE)	UG/KG	PEST / PCB			0.05	U	0.05	U
GAMMA-CHLORDANE	UG/KG	PEST / PCB			0.5	U	0.05	U
HEPTACHLOR	UG/KG	PEST / PCB			0.05	U	0.05	U
HEPTACHLOR EPOXIDE	UG/KG	PEST / PCB			0.05	U	0.05	U
METHOXYCHLOR	UG/KG	PEST / PCB			0.5	U	0.05	U
PCB-1016	UG/KG	PEST / PCB			0.5	U	0.05	U
PCB-1221	UG/KG	PEST / PCB			0.5	U	0.05	U
PCB-1232	UG/KG	PEST / PCB			0.5	U	0.05	U
PCB-1242	UG/KG	PEST / PCB			0.5	U	0.05	U
PCB-1248	UG/KG	PEST / PCB			0.5	U	0.05	U
PCB-1254	UG/KG	PEST / PCB			1	U	1	U
PCB-1260	UG/KG	PEST / PCB			1	U	1	U
TOXAPHENE	UG/KG	PEST / PCB			1	U	1	U
4,4'-DDD	UG/L	PEST / PCB						
4,4'-DDE	UG/L	PEST / PCB						
4,4'-DDT	UG/L	PEST / PCB						
ALDRIN	UG/L	PEST / PCB						
ALPHA-BHC	UG/L	PEST / PCB						
ALPHA-CHLORDANE	UG/L	PEST / PCB						
BETA-BHC	UG/L	PEST / PCB						
DELTA-BHC	UG/L	PEST / PCB						
DIBUTYL CHLORENDATE	UG/L	PEST / PCB						
DIELDRIN	UG/L	PEST / PCB						
ENDOSULFAN I	UG/L	PEST / PCB						
ENDOSULFAN II	UG/L	PEST / PCB						
ENDOSULFAN SULFATE	UG/L	PEST / PCB						
ENDRIN	UG/L	PEST / PCB						
ENDRIN KETONE	UG/L	PEST / PCB						
GAMMA-BHC (LINDANE)	UG/L	PEST / PCB						
GAMMA-CHLORDANE	UG/L	PEST / PCB						
HEPTACHLOR	UG/L	PEST / PCB						
HEPTACHLOR EPOXIDE	UG/L	PEST / PCB						
METHOXYCHLOR	UG/L	PEST / PCB						
PCB-1016	UG/L	PEST / PCB						
PCB-1221	UG/L	PEST / PCB						
PCB-1232	UG/L	PEST / PCB						
PCB-1242	UG/L	PEST / PCB						
PCB-1248	UG/L	PEST / PCB						
PCB-1254	UG/L	PEST / PCB						
PCB-1260	UG/L	PEST / PCB						
TOXAPHENE	UG/L	PEST / PCB						
DIESEL	MG/KG	TPHC						
JP4	MG/KG	TPHC						
JP5	MG/KG	TPHC						
STODDARD	MG/KG	TPHC						
DIESEL	UG/KG	TPHC			250	U	250	U
JP4	UG/KG	TPHC			250	U	250	U

NAVSTA-SAN DIEGO
SITE 4 WATER

		SAMPLE NUMBER:	NS4-TB-1/25/91		NS4-WAER		NS4-WAER-1/25/91	
		SAMPLING DATE:	01/25/91		01/24/91		01/25/91	
		BORING:	TB				WAER	
		SITE:	NS4		NS4		NS4	
		DEPTH:	NS4-TB-1/25/91		NS4-WAER		NS4-WAER-1/25/91	
COMPOUND NAME	UNITS	TEST CODE	RESULT	QUALIFIER	RESULT	QUALIFIER	RESULT	QUALIFIER
JP5	UG/KG	TPHC			250	U	250	U
STODDARD	UG/KG	TPHC						
BENZO(A)PYRENE	UG/L	TPHC						
STODDARD	UG/L	TPHC						
1,1,1-TRICHLOROETHANE	UG/KG	VOA	5	U	5	U	5	U
1,1,2,2-TETRACHLOROETHANE	UG/KG	VOA	5	U	5	U	5	U
1,1,2-TRICHLOROETHANE	UG/KG	VOA	5	U	5	U	5	U
1,1-DICHLOROETHANE	UG/KG	VOA	5	U	5	U	5	U
1,1-DICHLOROETHENE	UG/KG	VOA	5	U	5	U	5	U
1,2-DICHLOROETHANE	UG/KG	VOA	5	U	5	U	5	U
1,2-DICHLOROETHENE (TOTAL)	UG/KG	VOA	5	U	5	U	5	U
1,2-DICHLOROPROPANE	UG/KG	VOA	5	U	5	U	5	U
2-BUTANONE	UG/KG	VOA	10	U	10	U	10	U
2-HEXANONE	UG/KG	VOA	10	U	10	U	10	U
4-METHYL-2-PENTANONE	UG/KG	VOA	10	U	10	U	10	U
ACETONE	UG/KG	VOA	4	J	12		22	
BENZENE	UG/KG	VOA	5	U	5	U	5	U
BROMODICHLOROMETHANE	UG/KG	VOA	5	U	6		8	
BROMOFORM	UG/KG	VOA	5	U	5	U	2	J
BROMOMETHANE	UG/KG	VOA	10	U	10	U	10	U
CARBON DISULFIDE	UG/KG	VOA	5	U	5	U	1	J
CARBON TETRACHLORIDE	UG/KG	VOA	5	U	5	U	5	U
CHLOROBENZENE	UG/KG	VOA	5	U	5	U	5	U
CHLOROETHANE	UG/KG	VOA	10	U	10	U	10	U
CHLOROFORM	UG/KG	VOA	5	U	9		7	
CHLOROMETHANE	UG/KG	VOA	10	U	10	U	10	U
CIS-1,3-DICHLOROPROPENE	UG/KG	VOA	5	U	5	U	5	U
DIBROMOCHLOROMETHANE	UG/KG	VOA	5	U	6		8	
ETHYLBENZENE	UG/KG	VOA	5	U	5	U	5	U
METHYLENE CHLORIDE	UG/KG	VOA	5	B	2	BJ	3	BJ
STYRENE	UG/KG	VOA	5	U	5	U	5	U
TETRACHLOROETHENE	UG/KG	VOA	5	U	5	U	5	U
TOLUENE	UG/KG	VOA	5	U	5	U	5	U
TRANS-1,3-DICHLOROPROPENE	UG/KG	VOA	5	U	5	U	5	U
TRICHLOROETHENE	UG/KG	VOA	5	U	5	U	5	U
VINYL ACETATE	UG/KG	VOA	10	U	10	U	10	U
VINYL CHLORIDE	UG/KG	VOA	10	U	10	U	10	U
XYLENES (TOTAL)	UG/KG	VOA	5	U	5	U	5	U
1,1,1-TRICHLOROETHANE	UG/L	VOA						
1,1,2,2-TETRACHLOROETHANE	UG/L	VOA						
1,1,2-TRICHLOROETHANE	UG/L	VOA						
1,1-DICHLOROETHANE	UG/L	VOA						
1,1-DICHLOROETHENE	UG/L	VOA						
1,2-DICHLOROETHANE	UG/L	VOA						
1,2-DICHLOROETHANE-D4	UG/L	VOA						
1,2-DICHLOROETHENE (TOTAL)	UG/L	VOA						
1,2-DICHLOROPROPANE	UG/L	VOA						
2-BUTANONE	UG/L	VOA						
2-HEXANONE	UG/L	VOA						
4-METHYL-2-PENTANONE	UG/L	VOA						
ACETONE	UG/L	VOA						

NAVSTA-SAN DIEGO
SITE 4 WATER

		SAMPLE NUMBER:	NS4-TB-1/25/91		NS4-WAER		NS4-WAER-1/25/91	
		SAMPLING DATE:	01/25/91		01/24/91		01/25/91	
		BORING:	TB				WAER	
		SITE:	NS4		NS4		NS4	
		DEPTH:	NS4-TB-1/25/91		NS4-WAER		NS4-WAER-1/25/91	
COMPOUND NAME	UNITS	TEST CODE	RESULT	QUALIFIER	RESULT	QUALIFIER	RESULT	QUALIFIER
BENZENE	UG/L	VOA						
BROMODICHLOROMETHANE	UG/L	VOA						
BROMOFLUOROBENZENE	UG/L	VOA						
BROMOFORM	UG/L	VOA						
BROMOMETHANE	UG/L	VOA						
CARBON DISULFIDE	UG/L	VOA						
CARBON TETRACHLORIDE	UG/L	VOA						
CHLOROBENZENE	UG/L	VOA						
CHLOROETHANE	UG/L	VOA						
CHLOROFORM	UG/L	VOA						
CHLOROMETHANE	UG/L	VOA						
CIS-1,3-DICHLOROPROPENE	UG/L	VOA						
DIBROMOCHLOROMETHANE	UG/L	VOA						
ETHYLBENZENE	UG/L	VOA						
METHYLENE CHLORIDE	UG/L	VOA						
STYRENE	UG/L	VOA						
TETRACHLOROETHENE	UG/L	VOA						
TOLUENE	UG/L	VOA						
TOLUENE-D8	UG/L	VOA						
TRANS-1,3-DICHLOROPROPENE	UG/L	VOA						
TRICHLOROETHENE	UG/L	VOA						
VINYL ACETATE	UG/L	VOA						
VINYL CHLORIDE	UG/L	VOA						
XYLENES (TOTAL)	UG/L	VOA						

NAVSTA-SAN DIEGO
SITE 7 WATER

		SAMPLE NUMBER:	NS7-BH1-S01-4		NS7-BH1-S02-9		NS7-BH1-S03-14		NS7-BH1-S03-14-FD		NS7-BH1-S04-19	
		SAMPLING DATE:	01/22/91		01/22/91		01/22/91		01/22/91		01/22/91	
		BORING:	BH1		BH1		BH1		BH1		BH1	
		SITE:	NS7		NS7		NS7		NS7		NS7	
		DEPTH:	4		9		14		14-FD		19	
COMPOUND NAME	UNITS	TEST CODE	RESULT	QUALIFIER	RESULT	QUALIFIER	RESULT	QUALIFIER	RESULT	QUALIFIER	RESULT	QUALIFIER
1,2,4-TRICHLOROBENZENE	UG/KG	BNA	2800	U	3800	UR	120	J	380	U	400	U
1,2-DICHLOROBENZENE	UG/KG	BNA	2800	U	3800	UR	370	U	380	U	400	U
1,3-DICHLOROBENZENE	UG/KG	BNA	2800	U	3800	UR	370	U	380	U	400	U
1,4-DICHLOROBENZENE	UG/KG	BNA	2800	U	3800	UR	210	J	380	U	400	U
2,4,5-TRICHLOROPHENOL	UG/KG	BNA	14000	U	19000	UR	1800	U	1800	U	2000	U
2,4,6-TRICHLOROPHENOL	UG/KG	BNA	2800	U	3800	UR	370	U	380	U	400	U
2,4-DICHLOROPHENOL	UG/KG	BNA	2800	U	3800	UR	370	U	380	U	400	U
2,4-DIMETHYLPHENOL	UG/KG	BNA	2800	U	3800	UR	370	U	380	U	400	U
2,4-DINITROPHENOL	UG/KG	BNA	14000	U	19000	UR	1800	U	1800	U	2000	U
2,4-DINITROTOLUENE	UG/KG	BNA	2800	U	3800	UR	370	U	380	U	400	U
2,6-DINITROTOLUENE	UG/KG	BNA	2800	U	3800	UR	370	U	380	U	400	U
2-CHLORONAPHTHALENE	UG/KG	BNA	2800	U	3800	UR	370	U	380	U	400	U
2-CHLOROPHENOL	UG/KG	BNA	2800	U	3800	UR	370	U	380	U	400	U
2-METHYLNAPHTHALENE	UG/KG	BNA	1900	J	830	J	720		260	J	400	U
2-METHYLPHENOL	UG/KG	BNA	2800	U	3800	UR	370	U	380	U	400	U
2-NITROANILINE	UG/KG	BNA	14000	U	19000	UR	1800	U	1800	U	2000	U
2-NITROPHENOL	UG/KG	BNA	2800	U	3800	UR	370	U	380	U	400	U
3,3'-DICHLOROBENZIDINE	UG/KG	BNA	5600	U	7700	UR	750	U	760	U	810	U
3-NITROANILINE	UG/KG	BNA	14000	U	19000	UR	1800	U	1800	U	2000	U
4,6-DINITRO-2-METHYLPHENOL	UG/KG	BNA	14000	U	19000	UR	1800	U	1800	U	2000	U
4-BROMOPHENYL-PHENYLETHER	UG/KG	BNA	2800	U	3800	UR	370	U	380	U	400	U
4-CHLORO-3-METHYLPHENOL	UG/KG	BNA	2800	U	3800	UR	370	U	380	U	400	U
4-CHLOROANILINE	UG/KG	BNA	540	J	3800	UR	1300		490		400	U
4-CHLOROPHENYL-PHENYLETHER	UG/KG	BNA	2800	U	3800	UR	370	U	380	U	400	U
4-METHYLPHENOL	UG/KG	BNA	2800	U	3800	UR	370	U	380	U	400	U
4-NITROANILINE	UG/KG	BNA	14000	U	19000	UR	1800	U	1800	U	2000	U
4-NITROPHENOL	UG/KG	BNA	14000	U	19000	UR	1800	U	1800	U	2000	U
ACENAPHTHENE	UG/KG	BNA	2800	U	3800	UR	52	J	380	U	400	U
ACENAPHTHYLENE	UG/KG	BNA	2800	U	3800	UR	370	U	380	U	400	U
ANTHRACENE	UG/KG	BNA	2800	U	3800	UR	370	U	380	U	400	U
BENZO(A)ANTHRACENE	UG/KG	BNA	2800	U	3800	UR	98	J	76	J	400	U
BENZO(A)PYRENE	UG/KG	BNA	2800	U	3800	UR	370	U	62	J	400	U
BENZO(B)FLUORANTHENE	UG/KG	BNA	2800	U	3800	UR	370	U	74	J	400	U
BENZO(G,H,I)PERYLENE	UG/KG	BNA	2800	U	3800	UR	370	U	380	U	400	U
BENZO(K)FLUORANTHENE	UG/KG	BNA	2800	U	3800	UR	370	U	65	J	400	U
BENZOIC ACID	UG/KG	BNA	14000	U	19000	UR	1800	U	1800	U	2000	U
BENZYL ALCOHOL	UG/KG	BNA	2800	U	3800	UR	370	U	380	U	400	U
BIS(2-CHLOROETHOXY)METHANE	UG/KG	BNA	2800	U	3800	UR	370	U	380	U	400	U
BIS(2-CHLOROETHYL)ETHER	UG/KG	BNA	2800	U	3800	UR	370	U	380	U	400	U
BIS(2-CHLOROISOPROPYL)ETHER	UG/KG	BNA	2800	U	3800	UR	370	U	380	U	400	U
BIS(2-ETHYLHEXYL)PHTHALATE	UG/KG	BNA	16000		11000	J	5400		2800		400	U
BUTYLBENZYLPHTHALATE	UG/KG	BNA	2800	U	3800	UR	370	U	380	U	400	U
CHRYSENE	UG/KG	BNA	2800	U	500	J	370	U	93	J	400	U
DI-N-BUTYLPHTHALATE	UG/KG	BNA	2800	U	3800	UR	150	J	380	U	400	U
DI-N-OCTYLPHTHALATE	UG/KG	BNA	2800	U	3800	UR	230	J	380	U	400	U
DIBENZ(A,H)ANTHRACENE	UG/KG	BNA	2800	U	3800	UR	370	U	380	U	400	U
DIBENZOFURAN	UG/KG	BNA	2800	U	3800	UR	370	U	380	U	400	U
DIETHYLPHTHALATE	UG/KG	BNA	2800	U	3800	UR	370	U	380	U	400	U
DIMETHYLPHTHALATE	UG/KG	BNA	2800	U	3800	UR	370	U	380	U	400	U
FLUORANTHENE	UG/KG	BNA	1300	J	760	J	220	J	150	J	400	U
FLUORENE	UG/KG	BNA	2800	U	3800	UR	120	J	49	J	400	U

NAVSTA-SAN DIEGO
SITE 7 WATER

		SAMPLE NUMBER:	NS7-BH1-S01-4		NS7-BH1-S02-9		NS7-BH1-S03-14		NS7-BH1-S03-14-FD		NS7-BH1-S04-19	
		SAMPLING DATE:	01/22/91		01/22/91		01/22/91		01/22/91		01/22/91	
		BORING:	BH1		BH1		BH1		BH1		BH1	
		SITE:	NS7		NS7		NS7		NS7		NS7	
		DEPTH:	4		9		14		14-FD		19	
COMPOUND NAME	UNITS	TEST CODE	RESULT	QUALIFIER	RESULT	QUALIFIER	RESULT	QUALIFIER	RESULT	QUALIFIER	RESULT	QUALIFIER
HEXACHLOROBENZENE	UG/KG	BNA	2800	U	3800	UR	370	U	380	U	400	U
HEXACHLOROBUTADIENE	UG/KG	BNA	2800	U	3800	UR	370	U	380	U	400	U
HEXACHLOROCYCLOPENTADIENE	UG/KG	BNA	2800	U	3800	UR	370	U	380	U	400	U
HEXACHLOROETHANE	UG/KG	BNA	2800	U	3800	UR	370	U	380	U	400	U
INDENO(1,2,3-C,D)PYRENE	UG/KG	BNA	2800	U	3800	UR	40	J	380	U	400	U
ISOPHORONE	UG/KG	BNA	2800	U	3800	UR	370	U	380	U	400	U
N-NITROSO-DI-N-PROPYLAMINE	UG/KG	BNA	2800	U	3800	UR	370	U	380	U	400	U
N-NITROSODIPHENYLAMINE (1)	UG/KG	BNA	2800	U	3800	UR	370	U	380	U	400	U
NAPHTHALENE	UG/KG	BNA	530	J	3800	UR	370	U	74	J	400	U
NITROBENZENE	UG/KG	BNA	2800	U	3800	UR	370	U	380	U	400	U
PENTACHLOROPHENOL	UG/KG	BNA	14000	U	19000	UR	1800	U	1800	U	2000	U
PHENANTHRENE	UG/KG	BNA	1300	J	760	J	410		200	J	400	U
PHENOL	UG/KG	BNA	2800	U	3800	UR	370	U	380	U	400	U
PYRENE	UG/KG	BNA	1200	J	860	J	250	J	160	J	400	U
ANTIMONY	UG/KG	CAC METALS	6.0	B	4.3	UJ	4.2	U	6.4	B	5.0	B
ARSENIC	UG/KG	CAC METALS	4.4		4.0	J	3.7		3.2		3.2	
BARIUM	UG/KG	CAC METALS	180		142		84.5		95.7		207	
BERYLLIUM	UG/KG	CAC METALS	0.24	U	0.23	U	0.22	U	0.22	U	0.23	U
CADMIUM	UG/KG	CAC METALS	5.0		3.0		0.88	U	0.87	U	0.93	U
CHROMIUM	UG/KG	CAC METALS	65.0		39.9		15.5		23.1		15.6	
COBALT	UG/KG	CAC METALS	8.5	B	7.4	B	5.9	B	8.4	B	7.9	B
COPPER	UG/KG	CAC METALS	84.9		53.9		15.0		27.2		9.6	
LEAD	UG/KG	CAC METALS	91.4		94.7		23.6		21.2		10.6	
MERCURY	UG/KG	CAC METALS	1.7		1.0		0.22		0.46		0.18	U
MOLYBDENUM	UG/KG	CAC METALS	2.6	B	1.6	U	1.5	U	1.5	U	1.6	U
NICKEL	UG/KG	CAC METALS	24.8		13.5		6.5	B	9.1		4.9	B
SELENIUM	UG/KG	CAC METALS	0.52	B	0.43	UJ	0.45	U	0.46	U	0.47	U
SILVER	UG/KG	CAC METALS	15.0		8.1		2.2	B	3.2		0.70	B
THALLIUM	UG/KG	CAC METALS	0.48	U	0.43	UJ	0.45	U	0.46	U	0.47	U
VANADIUM	UG/KG	CAC METALS	41.9		35.2		30.8		41.2		50.7	
ZINC	UG/KG	CAC METALS	253		162		48.2		74.7		41.2	
CAC WET EXTRACTION	DATE	CAC WET EX										
LEAD	MG/L	CAC WET EX	0.014	U	0.0070	U						
TOTAL CYANIDE	MG/L	CN										
TOTAL CYANIDE	UG/KG	CN	1		1	U	1	U	1	U	1	U
4,4'-DDD	UG/KG	PEST / PCB	98	U	74	UJ	36	U	18	U	20	U
4,4'-DDE	UG/KG	PEST / PCB	290	E	140	J	130		18	U	20	U
4,4'-DDT	UG/KG	PEST / PCB	98	U	74	UJ	36	U	18	U	20	U
ALDRIN	UG/KG	PEST / PCB	49	U	37	UJ	18	U	9.2	U	9.8	U
ALPHA-BHC	UG/KG	PEST / PCB	49	U	37	UJ	18	U	9.2	U	9.8	U
ALPHA-CHLORDANE	UG/KG	PEST / PCB	490	U	370	UJ	180	U	92	U	98	U
BETA-BHC	UG/KG	PEST / PCB	49	U	37	UJ	18	U	9.2	U	9.8	U
DELTA-BHC	UG/KG	PEST / PCB	49	U	37	UJ	18	U	9.2	U	9.8	U
DIELDRIN	UG/KG	PEST / PCB	98	U	74	UJ	36	U	18	U	20	U
ENDOSULFAN I	UG/KG	PEST / PCB	49	U	37	UJ	18	U	9.2	U	9.8	U
ENDOSULFAN II	UG/KG	PEST / PCB	98	U	74	UJ	36	U	18	U	20	U
ENDOSULFAN SULFATE	UG/KG	PEST / PCB	98	U	74	UJ	36	U	38		20	U
ENDRIN	UG/KG	PEST / PCB	98	U	74	UJ	36	U	18	U	20	U
ENDRIN KETONE	UG/KG	PEST / PCB	98	U	74	UJ	36	U	18	U	20	U
GAMMA-BHC (LINDANE)	UG/KG	PEST / PCB	49	U	37	UJ	18	U	9.2	U	9.8	U
GAMMA-CHLORDANE	UG/KG	PEST / PCB	490	U	370	UJ	180	U	92	U	98	U

NAVSTA-SAN DIEGO
SITE 7 WATER

		SAMPLE NUMBER:	NS7-BH2-S01-5		NS7-BH2-S02-10		NS7-BH2-S03-15		NS7-BH3-S01-2		NS7-BH3-S02-8	
		SAMPLING DATE:	01/23/91		01/23/91		01/23/91		01/22/91		01/22/91	
		BORING:	BH2		BH2		BH2		BH3		BH3	
		SITE:	NS7		NS7		NS7		NS7		NS7	
		DEPTH:	5		10		15		2		8	
COMPOUND NAME	UNITS	TEST CODE	RESULT	QUALIFIER	RESULT	QUALIFIER	RESULT	QUALIFIER	RESULT	QUALIFIER	RESULT	QUALIFIER
1,2,4-TRICHLOROBENZENE	UG/KG	BNA	800	U	780	U	390	U	350	U	360	U
1,2-DICHLOROBENZENE	UG/KG	BNA	180	J	780	U	390	U	350	U	360	U
1,3-DICHLOROBENZENE	UG/KG	BNA	800	U	780	U	390	U	350	U	360	U
1,4-DICHLOROBENZENE	UG/KG	BNA	280	J	510	J	130	J	350	U	360	U
2,4,5-TRICHLOROPHENOL	UG/KG	BNA	3900	U	3800	U	1900	U	1700	U	1800	U
2,4,6-TRICHLOROPHENOL	UG/KG	BNA	800	U	780	U	390	U	350	U	360	U
2,4-DICHLOROPHENOL	UG/KG	BNA	800	U	780	U	390	U	350	U	360	U
2,4-DIMETHYLPHENOL	UG/KG	BNA	800	U	780	U	390	U	350	U	360	U
2,4-DINITROPHENOL	UG/KG	BNA	3900	U	3800	U	1900	U	1700	U	1800	U
2,4-DINITROTOLUENE	UG/KG	BNA	800	U	780	U	390	U	350	U	360	U
2,6-DINITROTOLUENE	UG/KG	BNA	800	U	780	U	390	U	350	U	360	U
2-CHLORONAPHTHALENE	UG/KG	BNA	800	U	780	U	390	U	350	U	360	U
2-CHLOROPHENOL	UG/KG	BNA	800	U	780	U	390	U	350	U	360	U
2-METHYLNAPHTHALENE	UG/KG	BNA	470	J	1100		370	J	350	U	360	U
2-METHYLPHENOL	UG/KG	BNA	800	U	780	U	390	U	350	U	360	U
2-NITROANILINE	UG/KG	BNA	3900	U	3800	U	1900	U	1700	U	1800	U
2-NITROPHENOL	UG/KG	BNA	800	U	780	U	390	U	350	U	360	U
3,3'-DICHLOROBENZIDINE	UG/KG	BNA	1600	U	1600	U	81	J	700	U	730	U
3-NITROANILINE	UG/KG	BNA	3900	U	3800	U	1900	U	1700	U	1800	U
4,6-DINITRO-2-METHYLPHENOL	UG/KG	BNA	3900	U	3800	U	1900	U	1700	U	1800	U
4-BROMOPHENYL-PHENYLETHER	UG/KG	BNA	800	U	780	U	390	U	350	U	360	U
4-CHLORO-3-METHYLPHENOL	UG/KG	BNA	800	U	780	U	390	U	350	U	360	U
4-CHLOROANILINE	UG/KG	BNA	2200		2600		900		350	U	360	U
4-CHLOROPHENYL-PHENYLETHER	UG/KG	BNA	800	U	780	U	390	U	350	U	360	U
4-METHYLPHENOL	UG/KG	BNA	610	J	780	U	390	U	350	U	360	U
4-NITROANILINE	UG/KG	BNA	3900	U	3800	U	1900	U	1700	U	1800	U
4-NITROPHENOL	UG/KG	BNA	3900	U	3800	U	1900	U	1700	U	1800	U
ACENAPHTHENE	UG/KG	BNA	800	U	130	J	72	J	350	U	360	U
ACENAPHTHYLENE	UG/KG	BNA	800	U	780	U	390	U	350	U	360	U
ANTHRACENE	UG/KG	BNA	100	J	260	J	170	J	350	U	360	U
BENZO(A)ANTHRACENE	UG/KG	BNA	180	J	470	J	490		350	U	360	U
BENZO(A)PYRENE	UG/KG	BNA	800	U	290	J	310	J	350	U	360	U
BENZO(B)FLUORANTHENE	UG/KG	BNA	800	U	300	J	390		350	U	96	J
BENZO(G,H,I)PERYLENE	UG/KG	BNA	800	U	780	U	110	J	350	U	360	U
BENZO(K)FLUORANTHENE	UG/KG	BNA	800	U	340	J	310	J	350	U	360	U
BENZOIC ACID	UG/KG	BNA	3900	U	3800	U	1900	U	1700	U	1800	U
BENZYL ALCOHOL	UG/KG	BNA	800	U	780	U	390	U	350	U	360	U
BIS(2-CHLOROETHOXY)METHANE	UG/KG	BNA	800	U	780	U	390	U	350	U	360	U
BIS(2-CHLOROETHYL)ETHER	UG/KG	BNA	800	U	780	U	390	U	350	U	360	U
BIS(2-CHLOROISOPROPYL)ETHER	UG/KG	BNA	800	U	780	U	390	U	350	U	360	U
BIS(2-ETHYLHEXYL)PHTHALATE	UG/KG	BNA	7400		9000		3100		350	U	360	U
BUTYLBENZYLPHTHALATE	UG/KG	BNA	800	U	780	U	390	U	350	U	360	U
CHRYSENE	UG/KG	BNA	220	J	580	J	520		350	U	79	J
DI-N-BUTYLPHTHALATE	UG/KG	BNA	800	U	780	U	390	U	350	U	360	U
DI-N-OCTYLPHTHALATE	UG/KG	BNA	260	J	340	J	390	U	350	U	360	U
DIBENZ(A,H)ANTHRACENE	UG/KG	BNA	800	U	780	U	390	U	350	U	360	U
DIBENZOFURAN	UG/KG	BNA	800	U	780	U	390	U	350	U	360	U
DIETHYLPHTHALATE	UG/KG	BNA	800	U	780	U	390	U	350	U	360	U
DIMETHYLPHTHALATE	UG/KG	BNA	800	U	780	U	390	U	350	U	360	U
FLUORANTHENE	UG/KG	BNA	410	J	1200		1000		350	U	100	J
FLUORENE	UG/KG	BNA	110	J	210	J	110	J	350	U	360	U

NAVSTA-SAN DIEGO
SITE 7 WATER

		SAMPLE NUMBER:	NS7-BH2-S01-5		NS7-BH2-S02-10		NS7-BH2-S03-15		NS7-BH3-S01-2		NS7-BH3-S02-8	
		SAMPLING DATE:	01/23/91		01/23/91		01/23/91		01/22/91		01/22/91	
		BORING:	BH2		BH2		BH2		BH3		BH3	
		SITE:	NS7		NS7		NS7		NS7		NS7	
		DEPTH:	5		10		15		2		8	
COMPOUND NAME	UNITS	TEST CODE	RESULT	QUALIFIER	RESULT	QUALIFIER	RESULT	QUALIFIER	RESULT	QUALIFIER	RESULT	QUALIFIER
HEXACHLOROBENZENE	UG/KG	BNA	800	U	780	U	390	U	350	U	360	U
HEXACHLOROBUTADIENE	UG/KG	BNA	800	U	780	U	390	U	350	U	360	U
HEXACHLOROCYCLOPENTADIENE	UG/KG	BNA	800	U	780	U	390	U	350	U	360	U
HEXACHLOROETHANE	UG/KG	BNA	800	U	780	U	390	U	350	U	360	U
INDENO(1,2,3-C,D)PYRENE	UG/KG	BNA	800	U	160	J	120	J	350	U	360	U
ISOPHORONE	UG/KG	BNA	800	U	780	U	390	U	350	U	360	U
N-NITROSO-DI-N-PROPYLAMINE	UG/KG	BNA	800	U	780	U	390	U	350	U	360	U
N-NITROSODIPHENYLAMINE (1)	UG/KG	BNA	800	U	780	U	390	U	350	U	360	U
NAPHTHALENE	UG/KG	BNA	800	U	780	U	390	U	350	U	360	U
NITROBENZENE	UG/KG	BNA	800	U	780	U	390	U	350	U	360	U
PENTACHLOROPHENOL	UG/KG	BNA	3900	U	3800	U	1900	U	1700	U	1800	U
PHENANTHRENE	UG/KG	BNA	500	J	1300		690		350	U	360	U
PHENOL	UG/KG	BNA	800	U	780	U	390	U	350	U	360	U
PYRENE	UG/KG	BNA	500	J	1200		980		350	U	120	J
ANTIMONY	UG/KG	CAC METALS	9.4	J	4.3	U	5.4	B	4.7	B	4.0	U
ARSENIC	UG/KG	CAC METALS	4.6		3.1		2.4		0.99	B	2.9	
BARIUM	UG/KG	CAC METALS	197		103		112		47.2		61.2	
BERYLLIUM	UG/KG	CAC METALS	0.22	U	0.23	U	0.22	U	0.21	U	0.21	U
CADMIUM	UG/KG	CAC METALS	3.9		0.91	U	1.6		0.83	U	0.83	U
CHROMIUM	UG/KG	CAC METALS	58.7		30.5		30.8		8.3		13.0	
COBALT	UG/KG	CAC METALS	9.0	B	6.0	B	10.4	B	6.3	B	8.0	B
COPPER	UG/KG	CAC METALS	79.8		35.0	U	98.3		5.8		11.4	
LEAD	UG/KG	CAC METALS	106		25.2	U	27.6		5.8	B	7.3	
MERCURY	UG/KG	CAC METALS	1.3		0.55		0.49		0.16	U	0.17	U
MOLYBDENUM	UG/KG	CAC METALS	2.5	B	1.6	U	1.5	U	1.5	U	1.5	U
NICKEL	UG/KG	CAC METALS	20.7		9.6		10.9		2.8	B	5.5	B
SELENIUM	UG/KG	CAC METALS	0.45	U	0.46	U	0.45	U	0.42	U	0.42	U
SILVER	UG/KG	CAC METALS	12.2		5.2		4.2	U	0.62	U	0.62	U
THALLIUM	UG/KG	CAC METALS	0.45	U	0.46	U	0.45	U	0.42	U	0.42	U
VANADIUM	UG/KG	CAC METALS	41.8		47.5		58.2		27.2		39.5	
ZINC	UG/KG	CAC METALS	222	U	102	U	97.9	U	17.9		37.2	
CAC WET EXTRACTION	DATE	CAC WET EX										
LEAD	MG/L	CAC WET EX	0.075	U								
TOTAL CYANIDE	MG/L	CN										
TOTAL CYANIDE	UG/KG	CN	1	U	1	U	1	U	1	U	1	U
4,4'-DDD	UG/KG	PEST / PCB	78	UJ	64	U	19	U	17	U	18	U
4,4'-DDE	UG/KG	PEST / PCB	100	J	100		19	U	17	U	18	U
4,4'-DDT	UG/KG	PEST / PCB	78	UJ	64	U	19	U	17	U	18	U
ALDRIN	UG/KG	PEST / PCB	39	UJ	32	U	9.4	U	8.5	U	8.8	U
ALPHA-BHC	UG/KG	PEST / PCB	39	UJ	32	U	9.4	U	8.5	U	8.8	U
ALPHA-CHLORDANE	UG/KG	PEST / PCB	390	UJ	320	U	94	U	85	U	88	U
BETA-BHC	UG/KG	PEST / PCB	39	UJ	32	U	9.4	U	8.5	U	8.8	U
DELTA-BHC	UG/KG	PEST / PCB	39	UJ	32	U	9.4	U	8.5	U	8.8	U
DIELDRIN	UG/KG	PEST / PCB	78	UJ	64	U	19	U	17	U	18	U
ENDOSULFAN I	UG/KG	PEST / PCB	39	UJ	32	U	9.4	U	8.5	U	8.8	U
ENDOSULFAN II	UG/KG	PEST / PCB	78	UJ	64	U	19	U	17	U	18	U
ENDOSULFAN SULFATE	UG/KG	PEST / PCB	78	UJ	64	U	19	U	17	U	18	U
ENDRIN	UG/KG	PEST / PCB	78	UJ	64	U	40		17	U	18	U
ENDRIN KETONE	UG/KG	PEST / PCB	78	UJ	64	U	19	U	17	U	18	U
GAMMA-BHC (LINDANE)	UG/KG	PEST / PCB	39	UJ	32	U	9.4	U	8.5	U	8.8	U
GAMMA-CHLORDANE	*UG/KG*	*PEST / PCB*	390	UJ	320	U	94	U	85	U	88	U

NAVSTA-SAN DIEGO
SITE 7 WATER

		SAMPLE NUMBER:	NS7-BH3-S03-14		NS7-BH3-S04-18		NS7-BH4-S01-5		NS7-BH4-S02-10		NS7-BH4-S03-15	
		SAMPLING DATE:	01/22/91		01/22/91		01/23/91		01/23/91		01/23/91	
		BORING:	BH3		BH3		BH4		BH4		BH4	
		SITE:	NS7		NS7		NS7		NS7		NS7	
		DEPTH:	14		18		5		10		15	
COMPOUND NAME	UNITS	TEST CODE	RESULT	QUALIFIER	RESULT	QUALIFIER	RESULT	QUALIFIER	RESULT	QUALIFIER	RESULT	QUALIFIER
1,2,4-TRICHLOROBENZENE	UG/KG	BNA	360	U	420	U	390	U	380	U	370	U
1,2-DICHLOROBENZENE	UG/KG	BNA	360	U	420	U	390	U	380	U	370	U
1,3-DICHLOROBENZENE	UG/KG	BNA	360	U	420	U	390	U	380	U	370	U
1,4-DICHLOROBENZENE	UG/KG	BNA	360	U	420	U	390	U	57	J	77	J
2,4,5-TRICHLOROPHENOL	UG/KG	BNA	1800	U	2000	U	1900	U	1900	U	1800	U
2,4,6-TRICHLOROPHENOL	UG/KG	BNA	360	U	420	U	390	U	380	U	370	U
2,4-DICHLOROPHENOL	UG/KG	BNA	360	U	420	U	390	U	380	U	370	U
2,4-DIMETHYLPHENOL	UG/KG	BNA	360	U	420	U	390	U	380	U	370	U
2,4-DINITROPHENOL	UG/KG	BNA	1800	U	2000	U	1900	U	1900	U	1800	U
2,4-DINITROTOLUENE	UG/KG	BNA	360	U	420	U	390	U	380	U	370	U
2,6-DINITROTOLUENE	UG/KG	BNA	360	U	420	U	390	U	380	U	370	U
2-CHLORONAPHTHALENE	UG/KG	BNA	360	U	420	U	390	U	380	U	370	U
2-CHLOROPHENOL	UG/KG	BNA	360	U	420	U	390	U	380	U	370	U
2-METHYLNAPHTHALENE	UG/KG	BNA	360	U	420	U	390	U	180	J	46	J
2-METHYLPHENOL	UG/KG	BNA	360	U	420	U	390	U	380	U	370	U
2-NITROANILINE	UG/KG	BNA	1800	U	2000	U	1900	U	1900	U	1800	U
2-NITROPHENOL	UG/KG	BNA	360	U	420	U	390	U	380	U	370	U
3,3'-DICHLOROBENZIDINE	UG/KG	BNA	730	U	840	U	790	U	770	U	750	U
3-NITROANILINE	UG/KG	BNA	1800	U	2000	U	1900	U	1900	U	1800	U
4,6-DINITRO-2-METHYLPHENOL	UG/KG	BNA	1800	U	2000	U	1900	U	1900	U	1800	U
4-BROMOPHENYL-PHENYLETHER	UG/KG	BNA	360	U	420	U	390	U	380	U	370	U
4-CHLORO-3-METHYLPHENOL	UG/KG	BNA	360	U	420	U	390	U	380	U	370	U
4-CHLOROANILINE	UG/KG	BNA	360	U	420	U	530		610		1000	
4-CHLOROPHENYL-PHENYLETHER	UG/KG	BNA	360	U	420	U	390	U	380	U	370	U
4-METHYLPHENOL	UG/KG	BNA	360	U	420	U	390	U	380	U	370	U
4-NITROANILINE	UG/KG	BNA	1800	U	2000	U	1900	U	1900	U	1800	U
4-NITROPHENOL	UG/KG	BNA	1800	U	2000	U	1900	U	1900	U	1800	U
ACENAPHTHENE	UG/KG	BNA	360	U	420	U	390	U	48	J	83	J
ACENAPHTHYLENE	UG/KG	BNA	360	U	420	U	390	U	380	U	370	U
ANTHRACENE	UG/KG	BNA	360	U	420	U	390	U	380	U	62	J
BENZO(A)ANTHRACENE	UG/KG	BNA	360	U	420	U	390	U	380	U	370	U
BENZO(A)PYRENE	UG/KG	BNA	360	U	420	U	390	U	60	J	100	J
BENZO(B)FLUORANTHENE	UG/KG	BNA	360	U	420	U	390	U	120	J	230	J
BENZO(G,H,I)PERYLENE	UG/KG	BNA	360	U	420	U	390	U	380	U	370	U
BENZO(K)FLUORANTHENE	UG/KG	BNA	360	U	420	U	390	U	380	U	370	U
BENZOIC ACID	UG/KG	BNA	1800	U	2000	U	1900	U	1900	U	1800	U
BENZYL ALCOHOL	UG/KG	BNA	360	U	420	U	390	U	380	U	370	U
BIS(2-CHLOROETHOXY)METHANE	UG/KG	BNA	360	U	420	U	390	U	380	U	370	U
BIS(2-CHLOROETHYL)ETHER	UG/KG	BNA	360	U	420	U	390	U	380	U	370	U
BIS(2-CHLOROISOPROPYL)ETHER	UG/KG	BNA	360	U	420	U	390	U	380	U	370	U
BIS(2-ETHYLHEXYL)PHTHALATE	UG/KG	BNA	360	U	83	J	410		1800		2200	
BUTYLBENZYLPHTHALATE	UG/KG	BNA	360	U	420	U	390	U	380	U	370	U
CHRYSENE	UG/KG	BNA	360	U	420	U	390	U	74	J	180	J
DI-N-BUTYLPHTHALATE	UG/KG	BNA	360	U	420	U	390	U	380	U	370	U
DI-N-OCTYLPHTHALATE	UG/KG	BNA	360	U	420	U	390	U	380	U	370	U
DIBENZ(A,H)ANTHRACENE	UG/KG	BNA	360	U	420	U	390	U	380	U	370	U
DIBENZOFURAN	UG/KG	BNA	360	U	420	U	390	U	380	U	370	U
DIETHYLPHTHALATE	UG/KG	BNA	360	U	420	U	390	U	380	U	370	U
DIMETHYLPHTHALATE	UG/KG	BNA	360	U	420	U	390	U	380	U	370	U
FLUORANTHENE	UG/KG	BNA	360	U	420	U	390	U	140	J	340	J
FLUORENE	UG/KG	BNA	360	U	420	U	390	U	380	U	370	U

NAVSTA-SAN DIEGO
SITE 7 WATER

		SAMPLE NUMBER:	NS7-BH3-S03-14		NS7-BH3-S04-18		NS7-BH4-S01-5		NS7-BH4-S02-10		NS7-BH4-S03-15	
		SAMPLING DATE:	01/22/91		01/22/91		01/23/91		01/23/91		01/23/91	
		BORING:	BH3		BH3		BH4		BH4		BH4	
		SITE:	NS7		NS7		NS7		NS7		NS7	
		DEPTH:	14		18		5		10		15	
COMPOUND NAME	UNITS	TEST CODE	RESULT	QUALIFIER	RESULT	QUALIFIER	RESULT	QUALIFIER	RESULT	QUALIFIER	RESULT	QUALIFIER
HEXACHLOROBENZENE	UG/KG	BNA	360	U	420	U	390	U	380	U	370	U
HEXACHLOROBUTADIENE	UG/KG	BNA	360	U	420	U	390	U	380	U	370	U
HEXACHLOROCYCLOPENTADIENE	UG/KG	BNA	360	U	420	U	390	U	380	U	370	U
HEXACHLOROETHANE	UG/KG	BNA	360	U	420	U	390	U	380	U	370	U
INDENO(1,2,3-C,D)PYRENE	UG/KG	BNA	360	U	420	U	390	U	380	U	370	U
ISOPHORONE	UG/KG	BNA	360	U	420	U	390	U	380	U	370	U
N-NITROSO-DI-N-PROPYLAMINE	UG/KG	BNA	360	U	420	U	390	U	380	U	370	U
N-NITROSODIPHENYLAMINE (1)	UG/KG	BNA	360	U	420	U	390	U	380	U	370	U
NAPHTHALENE	UG/KG	BNA	360	U	420	U	390	U	77	J	100	J
NITROBENZENE	UG/KG	BNA	360	U	420	U	390	U	380	U	370	U
PENTACHLOROPHENOL	UG/KG	BNA	1800	U	2000	U	1900	U	1900	U	1800	U
PHENANTHRENE	UG/KG	BNA	360	U	420	U	390	U	150	J	320	J
PHENOL	UG/KG	BNA	360	U	420	U	390	U	380	U	370	U
PYRENE	UG/KG	BNA	360	U	420	U	59	J	130	J	320	J
ANTIMONY	UG/KG	CAC METALS	4.7	B	4.8	U	4.3	U	4.0	U	4.2	U
ARSENIC	UG/KG	CAC METALS	1.3	B	2.7		3.1		2.0	U	2.5	
BARIUM	UG/KG	CAC METALS	141		130		188		104		85.9	
BERYLLIUM	UG/KG	CAC METALS	0.22	U	0.25	U	0.23	U	0.22	U	0.22	U
CADMIUM	UG/KG	CAC METALS	0.87	U	1.0	U	4.2		0.86	U	0.89	U
CHROMIUM	UG/KG	CAC METALS	9.0		24.3		66.0		28.3		23.6	
COBALT	UG/KG	CAC METALS	5.5	B	14.1		8.9	B	7.2	B	7.0	B
COPPER	UG/KG	CAC METALS	7.0		22.5		87.4		29.8	U	23.1	U
LEAD	UG/KG	CAC METALS	3.0		5.4		64.5		25.8		29.6	
MERCURY	UG/KG	CAC METALS	0.16	U	0.19	U	1.8		0.47		0.17	U
MOLYBDENUM	UG/KG	CAC METALS	1.5	U	1.8	U	1.6	U	1.9	B	1.5	U
NICKEL	UG/KG	CAC METALS	2.0	U	7.7	B	20.2		8.1	B	5.9	B
SELENIUM	UG/KG	CAC METALS	0.41	U	0.50	U	0.45	U	0.44	U	0.45	U
SILVER	UG/KG	CAC METALS	0.65	U	1.2	B	15.0		4.8		3.7	U
THALLIUM	UG/KG	CAC METALS	0.41	U	0.50	U	0.45	U	0.44	U	0.45	U
VANADIUM	UG/KG	CAC METALS	42.6		85.0		54.9		54.7		52.7	
ZINC	UG/KG	CAC METALS	19.8		57.0		228	U	89.5	U	66.4	U
CAC WET EXTRACTION	DATE	CAC WET EX										
LEAD	MG/L	CAC WET EX					0.014	U				
TOTAL CYANIDE	MG/L	CN										
TOTAL CYANIDE	UG/KG	CN	1	U	1	U	1	U	1	U	1	U
4,4'-DDD	UG/KG	PEST / PCB	18	U	20	U	19	U	19	U	18	U
4,4'-DDE	UG/KG	PEST / PCB	18	U	20	U	26		36		45	
4,4'-DDT	UG/KG	PEST / PCB	18	U	20	U	19	U	19	U	18	U
ALDRIN	UG/KG	PEST / PCB	8.8	U	10	U	9.5	U	9.3	U	9.1	U
ALPHA-BHC	UG/KG	PEST / PCB	8.8	U	10	U	9.5	U	9.3	U	9.1	U
ALPHA-CHLORDANE	UG/KG	PEST / PCB	88	U	100	U	95	U	93	U	91	U
BETA-BHC	UG/KG	PEST / PCB	8.8	U	10	U	9.5	U	9.3	U	9.1	U
DELTA-BHC	UG/KG	PEST / PCB	8.8	U	10	U	9.5	U	9.3	U	9.1	U
DIELDRIN	UG/KG	PEST / PCB	18	U	20	U	19	U	19	U	18	U
ENDOSULFAN I	UG/KG	PEST / PCB	8.8	U	10	U	9.5	U	9.3	U	9.1	U
ENDOSULFAN II	UG/KG	PEST / PCB	18	U	20	U	19	U	19	U	18	U
ENDOSULFAN SULFATE	UG/KG	PEST / PCB	18	U	20	U	19	U	19	U	18	U
ENDRIN	UG/KG	PEST / PCB	18	U	20	U	19	U	19	U	18	U
ENDRIN KETONE	UG/KG	PEST / PCB	18	U	20	U	19	U	19	U	18	U
GAMMA-BHC (LINDANE)	UG/KG	PEST / PCB	8.8	U	10	U	9.5	U	9.3	U	9.1	U
GAMMA-CHLORDANE	UG/KG	PEST / PCB	88	U	100	U	95	U	93	U	91	U

NAVSTA-SAN DIEGO
SITE 7 WATER

		SAMPLE NUMBER:	NS7-BH4-S04-20		NS7-BH5-S01-5		NS7-BH5-S02-10		NS7-BH5-S02-10 FD		NS7-BH5-S03-15	
		SAMPLING DATE:	01/23/91		01/22/91		01/22/91		01/22/91		01/22/91	
		BORING:	BH4		BH5		BH5		BH5		BH5	
		SITE:	NS7		NS7		NS7		NS7		NS7	
		DEPTH:	20		5		10		10 FD		15	
COMPOUND NAME	UNITS	TEST CODE	RESULT	QUALIFIER	RESULT	QUALIFIER	RESULT	QUALIFIER	RESULT	QUALIFIER	RESULT	QUALIFIER
1,2,4-TRICHLOROBENZENE	UG/KG	BNA	380	U	370	U	360	U	370	U	410	U
1,2-DICHLOROBENZENE	UG/KG	BNA	380	U	370	U	360	U	370	U	410	U
1,3-DICHLOROBENZENE	UG/KG	BNA	380	U	370	U	360	U	370	U	410	U
1,4-DICHLOROBENZENE	UG/KG	BNA	380	U	370	U	360	U	370	U	410	U
2,4,5-TRICHLOROPHENOL	UG/KG	BNA	1800	U	1800	U	1800	U	1800	U	2000	U
2,4,6-TRICHLOROPHENOL	UG/KG	BNA	380	U	370	U	360	U	370	U	410	U
2,4-DICHLOROPHENOL	UG/KG	BNA	380	U	370	U	360	U	370	U	410	U
2,4-DIMETHYLPHENOL	UG/KG	BNA	380	U	370	U	360	U	370	U	410	U
2,4-DINITROPHENOL	UG/KG	BNA	1800	U	1800	U	1800	U	1800	U	2000	U
2,4-DINITROTOLUENE	UG/KG	BNA	380	U	370	U	360	U	370	U	410	U
2,6-DINITROTOLUENE	UG/KG	BNA	380	U	370	U	360	U	370	U	410	U
2-CHLORONAPHTHALENE	UG/KG	BNA	380	U	370	U	360	U	370	U	410	U
2-CHLOROPHENOL	UG/KG	BNA	380	U	370	U	360	U	370	U	410	U
2-METHYLNAPHTHALENE	UG/KG	BNA	380	U	370	U	360	U	370	U	410	U
2-METHYLPHENOL	UG/KG	BNA	380	U	370	U	360	U	370	U	410	U
2-NITROANILINE	UG/KG	BNA	1800	U	1800	U	1800	U	1800	U	2000	U
2-NITROPHENOL	UG/KG	BNA	380	U	370	U	360	U	370	U	410	U
3,3'-DICHLOROBENZIDINE	UG/KG	BNA	760	U	750	U	730	U	730	U	820	U
3-NITROANILINE	UG/KG	BNA	1800	U	1800	U	1800	U	1800	U	2000	U
4,6-DINITRO-2-METHYLPHENOL	UG/KG	BNA	1800	U	1800	U	1800	U	1800	U	2000	U
4-BROMOPHENYL-PHENYLETHER	UG/KG	BNA	380	U	370	U	360	U	370	U	410	U
4-CHLORO-3-METHYLPHENOL	UG/KG	BNA	380	U	370	U	360	U	370	U	410	U
4-CHLOROANILINE	UG/KG	BNA	380	U	100	J	360	U	370	U	410	U
4-CHLOROPHENYL-PHENYLETHER	UG/KG	BNA	380	U	370	U	360	U	370	U	410	U
4-METHYLPHENOL	UG/KG	BNA	380	U	370	U	360	U	370	U	410	U
4-NITROANILINE	UG/KG	BNA	1800	U	1800	U	1800	U	1800	U	2000	U
4-NITROPHENOL	UG/KG	BNA	1800	U	1800	U	1800	U	1800	U	2000	U
ACENAPHTHENE	UG/KG	BNA	380	U	370	U	360	U	370	U	410	U
ACENAPHTHYLENE	UG/KG	BNA	380	U	370	U	360	U	370	U	410	U
ANTHRACENE	UG/KG	BNA	380	U	370	U	360	U	370	U	410	U
BENZO(A)ANTHRACENE	UG/KG	BNA	380	U	370	U	360	U	370	U	410	U
BENZO(A)PYRENE	UG/KG	BNA	380	U	370	U	360	U	370	U	410	U
BENZO(B)FLUORANTHENE	UG/KG	BNA	380	U	370	U	360	U	370	U	410	U
BENZO(G,H,I)PERYLENE	UG/KG	BNA	380	U	370	U	360	U	370	U	410	U
BENZO(K)FLUORANTHENE	UG/KG	BNA	380	U	370	U	360	U	370	U	410	U
BENZOIC ACID	UG/KG	BNA	1800	U	1800	U	1800	U	1800	U	2000	U
BENZYL ALCOHOL	UG/KG	BNA	380	U	370	U	360	U	370	U	410	U
BIS(2-CHLOROETHOXY)METHANE	UG/KG	BNA	380	U	370	U	360	U	370	U	410	U
BIS(2-CHLOROETHYL)ETHER	UG/KG	BNA	380	U	370	U	360	U	370	U	410	U
BIS(2-CHLOROISOPROPYL)ETHER	UG/KG	BNA	380	U	370	U	360	U	370	U	410	U
BIS(2-ETHYLHEXYL)PHTHALATE	UG/KG	BNA	380	U	370	U	87	J	180	J	410	U
BUTYLBENZYLPHTHALATE	UG/KG	BNA	380	U	370	U	360	U	370	U	410	U
CHRYSENE	UG/KG	BNA	380	U	370	U	360	U	370	U	410	U
DI-N-BUTYLPHTHALATE	UG/KG	BNA	380	U	370	U	360	U	370	U	410	U
DI-N-OCTYLPHTHALATE	UG/KG	BNA	380	U	370	U	360	U	370	U	410	U
DIBENZ(A,H)ANTHRACENE	UG/KG	BNA	380	U	370	U	360	U	370	U	410	U
DIBENZOFURAN	UG/KG	BNA	380	U	370	U	360	U	370	U	410	U
DIETHYLPHTHALATE	UG/KG	BNA	380	U	370	U	160	J	370	U	500	
DIMETHYLPHTHALATE	UG/KG	BNA	380	U	370	U	360	U	370	U	410	U
FLUORANTHENE	UG/KG	BNA	380	U	370	U	360	U	370	U	410	U
FLUORENE	UG/KG	BNA	380	U	370	U	360	U	370	U	410	U

NAVSTA-SAN DIEGO
SITE 7 WATER

		SAMPLE NUMBER:	NS7-BH4-S04-20		NS7-BH5-S01-5		NS7-BH5-S02-10		NS7-BH5-S02-10 FD		NS7-BH5-S03-15	
		SAMPLING DATE:	01/23/91		01/22/91		01/22/91		01/22/91		01/22/91	
		BORING:	BH4		BH5		BH5		BH5		BH5	
		SITE:	NS7		NS7		NS7		NS7		NS7	
		DEPTH:	20		5		10		10 FD		15	
COMPOUND NAME	UNITS	TEST CODE	RESULT	QUALIFIER	RESULT	QUALIFIER	RESULT	QUALIFIER	RESULT	QUALIFIER	RESULT	QUALIFIER
HEXACHLOROBENZENE	UG/KG	BNA	380	U	370	U	360	U	370	U	410	U
HEXACHLOROBUTADIENE	UG/KG	BNA	380	U	370	U	360	U	370	U	410	U
HEXACHLOROCYCLOPENTADIENE	UG/KG	BNA	380	U	370	U	360	U	370	U	410	U
HEXACHLOROETHANE	UG/KG	BNA	380	U	370	U	360	U	370	U	410	U
INDENO(1,2,3-C,D)PYRENE	UG/KG	BNA	380	U	370	U	360	U	370	U	410	U
ISOPHORONE	UG/KG	BNA	380	U	370	U	360	U	370	U	410	U
N-NITROSO-DI-N-PROPYLAMINE	UG/KG	BNA	380	U	370	U	360	U	370	U	410	U
N-NITROSODIPHENYLAMINE (1)	UG/KG	BNA	380	U	370	U	360	U	370	U	410	U
NAPHTHALENE	UG/KG	BNA	380	U	370	U	360	U	370	U	410	U
NITROBENZENE	UG/KG	BNA	380	U	370	U	360	U	370	U	410	U
PENTACHLOROPHENOL	UG/KG	BNA	1800	U	1800	U	1800	U	1800	U	2000	U
PHENANTHRENE	UG/KG	BNA	380	U	370	U	360	U	370	U	410	U
PHENOL	UG/KG	BNA	380	U	370	U	360	U	370	U	410	U
PYRENE	UG/KG	BNA	380	U	370	U	360	U	370	U	410	U
ANTIMONY	UG/KG	CAC METALS	4.3	U	4.0	U	4.0	U	4.5	B	4.5	U
ARSENIC	UG/KG	CAC METALS	3.5		4.0		1.2	B	1.4	B	0.67	B
BARIUM	UG/KG	CAC METALS	67.4		118		29.3	B	24.8	B	24.8	B
BERYLLIUM	UG/KG	CAC METALS	0.22	U	0.22	U	0.22	U	0.21	U	0.24	U
CADMIUM	UG/KG	CAC METALS	0.90	U	0.87	U	0.87	U	0.86	U	0.95	U
CHROMIUM	UG/KG	CAC METALS	16.4		22.3		11.6		13.1		6.9	
COBALT	UG/KG	CAC METALS	11.5		8.1	B	5.7	B	6.8	B	4.4	B
COPPER	UG/KG	CAC METALS	12.9	U	24.3		14.1		6.9		4.4	B
LEAD	UG/KG	CAC METALS	11.7	U	25.8		2.7		3.0		3.6	
MERCURY	UG/KG	CAC METALS	0.17	U	1.3		0.17	U	0.17	U	0.19	U
MOLYBDENUM	UG/KG	CAC METALS	1.6	U	1.5	U	1.5	U	1.5	U	1.7	U
NICKEL	UG/KG	CAC METALS	6.5	B	8.1	B	2.0	B	1.9	U	2.7	B
SELENIUM	UG/KG	CAC METALS	0.43	U	0.45	U	0.43	U	0.41	U	0.49	U
SILVER	UG/KG	CAC METALS	0.75	U	2.4		0.65	U	0.64	U	0.71	U
THALLIUM	UG/KG	CAC METALS	0.43	U	0.45	U	0.43	U	0.41	U	0.49	U
VANADIUM	UG/KG	CAC METALS	53.8		48.5		46.9		49.7		21.2	
ZINC	UG/KG	CAC METALS	47.1	U	69.4		19.2		18.3		17.2	
CAC WET EXTRACTION	DATE	CAC WET EX										
LEAD	MG/L	CAC WET EX										
TOTAL CYANIDE	MG/L	CN										
TOTAL CYANIDE	UG/KG	CN	1	U	1		1	U	1	U	1	U
4,4'-DDD	UG/KG	PEST / PCB	18	U	18	U	18	U	18	U	20	U
4,4'-DDE	UG/KG	PEST / PCB	18	U	18	U	18	U	18	U	20	U
4,4'-DDT	UG/KG	PEST / PCB	18	U	18	U	18	U	18	U	20	U
ALDRIN	UG/KG	PEST / PCB	9.2	U	9.1	U	8.8	U	8.9	U	10	U
ALPHA-BHC	UG/KG	PEST / PCB	9.2	U	9.1	U	8.8	U	8.9	U	10	U
ALPHA-CHLORDANE	UG/KG	PEST / PCB	92	U	91	U	88	U	89	U	100	U
BETA-BHC	UG/KG	PEST / PCB	9.2	U	9.1	U	8.8	U	8.9	U	10	U
DELTA-BHC	UG/KG	PEST / PCB	9.2	U	9.1	U	8.8	U	8.9	U	10	U
DIELDRIN	UG/KG	PEST / PCB	18	U	18	U	18	U	18	U	20	U
ENDOSULFAN I	UG/KG	PEST / PCB	9.2	U	9.1	U	8.8	U	8.9	U	10	U
ENDOSULFAN II	UG/KG	PEST / PCB	18	U	18	U	18	U	18	U	20	U
ENDOSULFAN SULFATE	UG/KG	PEST / PCB	18	U	18	U	18	U	18	U	20	U
ENDRIN	UG/KG	PEST / PCB	18	U	18	U	18	U	18	U	20	U
ENDRIN KETONE	UG/KG	PEST / PCB	18	U	18	U	18	U	18	U	20	U
GAMMA-BHC (LINDANE)	UG/KG	PEST / PCB	9.2	U	9.1	U	8.8	U	8.9	U	10	U
GAMMA-CHLORDANE	UG/KG	PEST / PCB	92	U	91	U	88	U	89	U	100	U

NAVSTA-SAN DIEGO
SITE 7 WATER

		SAMPLE NUMBER:	NS7-BH5-S04-20		NS7-MW1-GW1		NS7-MW1-S01-5		NS7-MW1-S02-10		NS7-MW1-S03-15	
		SAMPLING DATE:	01/22/91		02/14/91		01/23/91		01/23/91		01/23/91	
		BORING:	BH5		MW1		MW1		MW1		MW1	
		SITE:	NS7		NS7		NS7		NS7		NS7	
		DEPTH:	20		NS7-MW1-GW1		5		10		15	
COMPOUND NAME	UNITS	TEST CODE	RESULT	QUALIFIER	RESULT	QUALIFIER	RESULT	QUALIFIER	RESULT	QUALIFIER	RESULT	QUALIFIER
1,2,4-TRICHLOROBENZENE	UG/KG	BNA	390	U	10	U	380	U	380	U	340	U
1,2-DICHLOROBENZENE	UG/KG	BNA	390	U	10	U	380	U	380	U	340	U
1,3-DICHLOROBENZENE	UG/KG	BNA	390	U	10	U	380	U	380	U	340	U
1,4-DICHLOROBENZENE	UG/KG	BNA	390	U	10	U	380	U	380	U	340	U
2,4,5-TRICHLOROPHENOL	UG/KG	BNA	1900	U	50	U	1900	U	1900	U	1600	U
2,4,6-TRICHLOROPHENOL	UG/KG	BNA	390	U	10	U	380	U	380	U	340	U
2,4-DICHLOROPHENOL	UG/KG	BNA	390	U	10	U	380	U	380	U	340	U
2,4-DIMETHYLPHENOL	UG/KG	BNA	390	U	10	U	380	U	380	U	340	U
2,4-DINITROPHENOL	UG/KG	BNA	1900	U	50	U	1900	U	1900	U	1600	U
2,4-DINITROTOLUENE	UG/KG	BNA	390	U	10	U	380	U	380	U	340	U
2,6-DINITROTOLUENE	UG/KG	BNA	390	U	10	U	380	U	380	U	340	U
2-CHLORONAPHTHALENE	UG/KG	BNA	390	U	10	U	380	U	380	U	340	U
2-CHLOROPHENOL	UG/KG	BNA	390	U	10	U	380	U	380	U	340	U
2-METHYLNAPHTHALENE	UG/KG	BNA	390	U	10	U	380	U	380	U	340	U
2-METHYLPHENOL	UG/KG	BNA	390	U	10	U	380	U	380	U	340	U
2-NITROANILINE	UG/KG	BNA	1900	U	50	U	1900	U	1900	U	1600	U
2-NITROPHENOL	UG/KG	BNA	390	U	10	U	380	U	380	U	340	U
3,3'-DICHLOROBENZIDINE	UG/KG	BNA	790	U	20	U	770	U	770	U	670	U
3-NITROANILINE	UG/KG	BNA	1900	U	50	U	1900	U	1900	U	1600	U
4,6-DINITRO-2-METHYLPHENOL	UG/KG	BNA	1900	U	50	U	1900	U	1900	U	1600	U
4-BROMOPHENYL-PHENYLETHER	UG/KG	BNA	390	U	10	U	380	U	380	U	340	U
4-CHLORO-3-METHYLPHENOL	UG/KG	BNA	390	U	10	U	380	U	380	U	340	U
4-CHLOROANILINE	UG/KG	BNA	390	U	10	U	380	U	380	U	340	U
4-CHLOROPHENYL-PHENYLETHER	UG/KG	BNA	390	U	10	U	380	U	380	U	340	U
4-METHYLPHENOL	UG/KG	BNA	390	U	10	U	380	U	380	U	340	U
4-NITROANILINE	UG/KG	BNA	1900	U	50	U	1900	U	1900	U	1600	U
4-NITROPHENOL	UG/KG	BNA	1900	U	50	U	1900	U	1900	U	1600	U
ACENAPHTHENE	UG/KG	BNA	390	U	10	U	380	U	380	U	340	U
ACENAPHTHYLENE	UG/KG	BNA	390	U	10	U	380	U	380	U	340	U
ANTHRACENE	UG/KG	BNA	390	U	10	U	380	U	380	U	340	U
BENZO(A)ANTHRACENE	UG/KG	BNA	390	U	10	U	380	U	380	U	340	U
BENZO(A)PYRENE	UG/KG	BNA	390	U	10	U	380	U	380	U	340	U
BENZO(B)FLUORANTHENE	UG/KG	BNA	390	U	10	U	380	U	380	U	340	U
BENZO(G,H,I)PERYLENE	UG/KG	BNA	390	U	10	U	380	U	380	U	340	U
BENZO(K)FLUORANTHENE	UG/KG	BNA	390	U	10	U	380	U	380	U	340	U
BENZOIC ACID	UG/KG	BNA	1900	U	50	U	1900	U	1900	U	1600	U
BENZYL ALCOHOL	UG/KG	BNA	390	U	10	U	380	U	380	U	340	U
BIS(2-CHLOROETHOXY)METHANE	UG/KG	BNA	390	U	10	U	380	U	380	U	340	U
BIS(2-CHLOROETHYL)ETHER	UG/KG	BNA	390	U	10	U	380	U	380	U	340	U
BIS(2-CHLOROISOPROPYL)ETHER	UG/KG	BNA	390	U	10	U	380	U	380	U	340	U
BIS(2-ETHYLHEXYL)PHTHALATE	UG/KG	BNA	46	J	10	U	380	U	380	U	340	U
BUTYLBENZYLPHTHALATE	UG/KG	BNA	390	U	10	U	380	U	380	U	340	U
CHRYSENE	UG/KG	BNA	390	U	10	U	380	U	380	U	340	U
DI-N-BUTYLPHTHALATE	UG/KG	BNA	390	U	10	U	380	U	380	U	340	U
DI-N-OCTYLPHTHALATE	UG/KG	BNA	390	U	10	U	380	U	380	U	340	U
DIBENZ(A,H)ANTHRACENE	UG/KG	BNA	390	U	10	U	380	U	380	U	340	U
DIBENZOFURAN	UG/KG	BNA	390	U	10	U	380	U	380	U	340	U
DIETHYLPHTHALATE	UG/KG	BNA	390	U	10	U	380	U	380	U	340	U
DIMETHYLPHTHALATE	UG/KG	BNA	390	U	10	U	380	U	380	U	340	U
FLUORANTHENE	UG/KG	BNA	390	U	10	U	380	U	380	U	340	U
FLUORENE	UG/KG	BNA	390	U	10	U	380	U	380	U	340	U

NAVSTA-SAN DIEGO
SITE 7 WATER

		SAMPLE NUMBER:	NS7-BH5-S04-20		NS7-MW1-GW1		NS7-MW1-S01-5		NS7-MW1-S02-10		NS7-MW1-S03-15	
		SAMPLING DATE:	01/22/91		02/14/91		01/23/91		01/23/91		01/23/91	
		BORING:	BH5		MW1		MW1		MW1		MW1	
		SITE:	NS7		NS7		NS7		NS7		NS7	
		DEPTH:	20		NS7-MW1-GW1		5		10		15	
COMPOUND NAME	UNITS	TEST CODE	RESULT	QUALIFIER	RESULT	QUALIFIER	RESULT	QUALIFIER	RESULT	QUALIFIER	RESULT	QUALIFIER
HEXACHLOROBENZENE	UG/KG	BNA	390	U	10	U	380	U	380	U	340	U
HEXACHLOROBUTADIENE	UG/KG	BNA	390	U	10	U	380	U	380	U	340	U
HEXACHLOROCYCLOPENTADIENE	UG/KG	BNA	390	U	10	U	380	U	380	U	340	U
HEXACHLOROETHANE	UG/KG	BNA	390	U	10	U	380	U	380	U	340	U
INDENO(1,2,3-C,D)PYRENE	UG/KG	BNA	390	U	10	U	380	U	380	U	340	U
ISOPHORONE	UG/KG	BNA	390	U	10	U	380	U	380	U	340	U
N-NITROSO-DI-N-PROPYLAMINE	UG/KG	BNA	390	U	10	U	380	U	380	U	340	U
N-NITROSODIPHENYLAMINE (1)	UG/KG	BNA	390	U	10	U	380	U	380	U	340	U
NAPHTHALENE	UG/KG	BNA	390	U	10	U	380	U	380	U	340	U
NITROBENZENE	UG/KG	BNA	390	U	10	U	380	U	380	U	340	U
PENTACHLOROPHENOL	UG/KG	BNA	1900	U	50	U	1900	U	1900	U	1600	U
PHENANTHRENE	UG/KG	BNA	390	U	10	U	380	U	380	U	340	U
PHENOL	UG/KG	BNA	390	U	10	U	380	U	380	U	340	U
PYRENE	UG/KG	BNA	390	U	10	U	380	U	380	U	340	U
ANTIMONY	UG/KG	CAC METALS	4.4	U	19.0	U	4.2	U	4.4	U	4.9	B
ARSENIC	UG/KG	CAC METALS	1.0	B	19.4		2.5		2.5		0.65	U
BARIUM	UG/KG	CAC METALS	45.4	B	11.9	B	31.1	U	79.5		6.5	U
BERYLLIUM	UG/KG	CAC METALS	0.23	U	1.3	B	0.22	U	0.23	U	0.19	U
CADMIUM	UG/KG	CAC METALS	0.92	U	4.0	U	0.89	U	0.92	U	0.78	U
CHROMIUM	UG/KG	CAC METALS	10.8		4.0	U	18.7		16.7		2.9	
COBALT	UG/KG	CAC METALS	5.8	B	5.0	U	6.8	B	12.6		1.8	B
COPPER	UG/KG	CAC METALS	6.3		6.0	U	4.9	U	22.1	U	1.2	U
LEAD	UG/KG	CAC METALS	3.9		1.0	B	6.4	U	5.3	U	1.1	U
MERCURY	UG/KG	CAC METALS	0.18	U	0.20	U	0.18	U	0.17	U	0.15	U
MOLYBDENUM	UG/KG	CAC METALS	1.6	U	13.2	B	1.6	U	1.6	U	1.4	U
NICKEL	UG/KG	CAC METALS	3.6	B	9.0	U	5.4	B	9.0	B	1.8	U
SELENIUM	UG/KG	CAC METALS	0.46	U	1.0	U	0.46	U	0.45	U	0.40	U
SILVER	UG/KG	CAC METALS	0.69	U	3.0	B	0.67	U	1.4	U	0.58	U
THALLIUM	UG/KG	CAC METALS	0.46	U	1.0	U	0.46	U	0.45	U	0.40	U
VANADIUM	UG/KG	CAC METALS	26.7		113		47.1		48.6		10.8	
ZINC	UG/KG	CAC METALS	24.8		46.8		28.2	U	45.4	U	6.5	U
CAC WET EXTRACTION	DATE	CAC WET EX										
LEAD	MG/L	CAC WET EX										
TOTAL CYANIDE	MG/L	CN										
TOTAL CYANIDE	UG/KG	CN	1	U			1	U	1	U	1	U
4,4'-DDD	UG/KG	PEST / PCB	19	U	0.10	U	19	U	19	U	16	U
4,4'-DDE	UG/KG	PEST / PCB	19	U	0.10	U	19	U	19	U	16	U
4,4'-DDT	UG/KG	PEST / PCB	19	U	0.10	U	19	U	19	U	16	U
ALDRIN	UG/KG	PEST / PCB	9.5	U	0.05	U	9.3	U	9.3	U	8.2	U
ALPHA-BHC	UG/KG	PEST / PCB	9.5	U	0.05	U	9.3	U	9.3	U	8.2	U
ALPHA-CHLORDANE	UG/KG	PEST / PCB	95	U	0.50	U	93	U	93	U	82	U
BETA-BHC	UG/KG	PEST / PCB	9.5	U	0.05	U	9.3	U	9.3	U	8.2	U
DELTA-BHC	UG/KG	PEST / PCB	9.5	U	0.05	U	9.3	U	9.3	U	8.2	U
DIELDRIN	UG/KG	PEST / PCB	19	U	0.10	U	19	U	19	U	16	U
ENDOSULFAN I	UG/KG	PEST / PCB	9.5	U	0.05	U	9.3	U	9.3	U	8.2	U
ENDOSULFAN II	UG/KG	PEST / PCB	19	U	0.10	U	19	U	19	U	16	U
ENDOSULFAN SULFATE	UG/KG	PEST / PCB	19	U	0.10	U	19	U	19	U	16	U
ENDRIN	UG/KG	PEST / PCB	19	U	0.10	U	19	U	19	U	16	U
ENDRIN KETONE	UG/KG	PEST / PCB	19	U	0.10	U	19	U	19	U	16	U
GAMMA-BHC (LINDANE)	UG/KG	PEST / PCB	9.5	U	0.05	U	9.3	U	9.3	U	8.2	U
GAMMA-CHLORDANE	UG/KG	PEST / PCB	95	U	0.50	U	93	U	93	U	82	U

NAVSTA-SAN DIEGO
SITE 7 WATER

		SAMPLE NUMBER:	NS7-MW1-S04-15FD		NS7-MW1-S07-20		NS7-MW2-GW1		NS7-MW2-S01-10		NS7-MW2-S02-15	
		SAMPLING DATE:	01/23/91		01/23/91		02/14/91		01/22/91		01/22/91	
		BORING:	MW1		MW1		MW2		MW2		MW2	
		SITE:	NS7		NS7		NS7		NS7		NS7	
		DEPTH:	15FD		20		NS7-MW2-GW1		10		15	
COMPOUND NAME	UNITS	TEST CODE	RESULT	QUALIFIER	RESULT	QUALIFIER	RESULT	QUALIFIER	RESULT	QUALIFIER	RESULT	QUALIFIER
1,2,4-TRICHLOROBENZENE	UG/KG	BNA	340	U	400	U	10	U	350	U	400	U
1,2-DICHLOROBENZENE	UG/KG	BNA	340	U	400	U	10	U	350	U	400	U
1,3-DICHLOROBENZENE	UG/KG	BNA	340	U	400	U	10	U	350	U	400	U
1,4-DICHLOROBENZENE	UG/KG	BNA	340	U	400	U	10	U	350	U	400	U
2,4,5-TRICHLOROPHENOL	UG/KG	BNA	1600	U	2000	U	50	U	1700	U	2000	U
2,4,6-TRICHLOROPHENOL	UG/KG	BNA	340	U	400	U	10	U	350	U	400	U
2,4-DICHLOROPHENOL	UG/KG	BNA	340	U	400	U	10	U	350	U	400	U
2,4-DIMETHYLPHENOL	UG/KG	BNA	340	U	400	U	10	U	350	U	400	U
2,4-DINITROPHENOL	UG/KG	BNA	1600	U	2000	U	50	U	1700	U	2000	U
2,4-DINITROTOLUENE	UG/KG	BNA	340	U	400	U	10	U	350	U	400	U
2,6-DINITROTOLUENE	UG/KG	BNA	340	U	400	U	10	U	350	U	400	U
2-CHLORONAPHTHALENE	UG/KG	BNA	340	U	400	U	10	U	350	U	400	U
2-CHLOROPHENOL	UG/KG	BNA	340	U	400	U	10	U	350	U	400	U
2-METHYLNAPHTHALENE	UG/KG	BNA	340	U	400	U	10	U	350	U	400	U
2-METHYLPHENOL	UG/KG	BNA	340	U	400	U	10	U	350	U	400	U
2-NITROANILINE	UG/KG	BNA	1600	U	2000	U	50	U	1700	U	2000	U
2-NITROPHENOL	UG/KG	BNA	340	U	400	U	10	U	350	U	400	U
3,3'-DICHLOROBENZIDINE	UG/KG	BNA	670	U	810	U	20	U	690	U	810	U
3-NITROANILINE	UG/KG	BNA	1600	U	2000	U	50	U	1700	U	2000	U
4,6-DINITRO-2-METHYLPHENOL	UG/KG	BNA	1600	U	2000	U	50	U	1700	U	2000	U
4-BROMOPHENYL-PHENYLETHER	UG/KG	BNA	340	U	400	U	10	U	350	U	400	U
4-CHLORO-3-METHYLPHENOL	UG/KG	BNA	340	U	400	U	10	U	350	U	400	U
4-CHLOROANILINE	UG/KG	BNA	340	U	400	U	10	U	350	U	400	U
4-CHLOROPHENYL-PHENYLETHER	UG/KG	BNA	340	U	400	U	10	U	350	U	400	U
4-METHYLPHENOL	UG/KG	BNA	340	U	400	U	10	U	350	U	400	U
4-NITROANILINE	UG/KG	BNA	1600	U	2000	U	50	U	1700	U	2000	U
4-NITROPHENOL	UG/KG	BNA	1600	U	2000	U	50	U	1700	U	2000	U
ACENAPHTHENE	UG/KG	BNA	340	U	400	U	10	U	350	U	400	U
ACENAPHTHYLENE	UG/KG	BNA	340	U	400	U	10	U	350	U	400	U
ANTHRACENE	UG/KG	BNA	340	U	400	U	10	U	350	U	400	U
BENZO(A)ANTHRACENE	UG/KG	BNA	340	U	400	U	10	U	350	U	400	U
BENZO(A)PYRENE	UG/KG	BNA	340	U	400	U	10	U	350	U	400	U
BENZO(B)FLUORANTHENE	UG/KG	BNA	340	U	400	U	10	U	350	U	400	U
BENZO(G,H,I)PERYLENE	UG/KG	BNA	340	U	400	U	10	U	350	U	400	U
BENZO(K)FLUORANTHENE	UG/KG	BNA	340	U	400	U	10	U	350	U	400	U
BENZOIC ACID	UG/KG	BNA	1600	U	2000	U	50	U	1700	U	2000	U
BENZYL ALCOHOL	UG/KG	BNA	340	U	400	U	10	U	350	U	400	U
BIS(2-CHLOROETHOXY)METHANE	UG/KG	BNA	340	U	400	U	10	U	350	U	400	U
BIS(2-CHLOROETHYL)ETHER	UG/KG	BNA	340	U	400	U	10	U	350	U	400	U
BIS(2-CHLOROISOPROPYL)ETHER	UG/KG	BNA	340	U	400	U	10	U	350	U	400	U
BIS(2-ETHYLHEXYL)PHTHALATE	UG/KG	BNA	340	U	400	U	10	U	350	U	110	J
BUTYLBENZYLPHTHALATE	UG/KG	BNA	340	U	400	U	10	U	350	U	400	U
CHRYSENE	UG/KG	BNA	340	U	400	U	10	U	350	U	400	U
DI-N-BUTYLPHTHALATE	UG/KG	BNA	340	U	400	U	10	U	350	U	400	U
DI-N-OCTYLPHTHALATE	UG/KG	BNA	340	U	400	U	10	U	350	U	400	U
DIBENZ(A,H)ANTHRACENE	UG/KG	BNA	340	U	400	U	10	U	350	U	400	U
DIBENZOFURAN	UG/KG	BNA	340	U	400	U	10	U	350	U	400	U
DIETHYLPHTHALATE	UG/KG	BNA	340	U	400	U	10	U	350	U	400	U
DIMETHYLPHTHALATE	UG/KG	BNA	340	U	400	U	10	U	350	U	400	U
FLUORANTHENE	UG/KG	BNA	340	U	400	U	10	U	350	U	400	U
FLUORENE	UG/KG	BNA	340	U	400	U	10	U	350	U	400	U

NAVSTA-SAN DIEGO
SITE 7 WATER

		SAMPLE NUMBER:	NS7-MW1-S04-15FD		NS7-MW1-S07-20		NS7-MW2-GW1		NS7-MW2-S01-10		NS7-MW2-S02-15	
		SAMPLING DATE:	01/23/91		01/23/91		02/14/91		01/22/91		01/22/91	
		BORING:	MW1		MW1		MW2		MW2		MW2	
		SITE:	NS7		NS7		NS7		NS7		NS7	
		DEPTH:	15FD		20		NS7-MW2-GW1		10		15	
COMPOUND NAME	UNITS	TEST CODE	RESULT	QUALIFIER	RESULT	QUALIFIER	RESULT	QUALIFIER	RESULT	QUALIFIER	RESULT	QUALIFIER
HEXACHLOROBENZENE	UG/KG	BNA	340	U	400	U	10	U	350	U	400	U
HEXACHLOROBUTADIENE	UG/KG	BNA	340	U	400	U	10	U	350	U	400	U
HEXACHLOROCYCLOPENTADIENE	UG/KG	BNA	340	U	400	U	10	U	350	U	400	U
HEXACHLOROETHANE	UG/KG	BNA	340	U	400	U	10	U	350	U	400	U
INDENO(1,2,3-C,D)PYRENE	UG/KG	BNA	340	U	400	U	10	U	350	U	400	U
ISOPHORONE	UG/KG	BNA	340	U	400	U	10	U	350	U	400	U
N-NITROSO-DI-N-PROPYLAMINE	UG/KG	BNA	340	U	400	U	10	U	350	U	400	U
N-NITROSODIPHENYLAMINE (1)	UG/KG	BNA	340	U	400	U	10	U	350	U	400	U
NAPHTHALENE	UG/KG	BNA	340	U	400	U	10	U	350	U	400	U
NITROBENZENE	UG/KG	BNA	340	U	400	U	10	U	350	U	400	U
PENTACHLOROPHENOL	UG/KG	BNA	1600	U	2000	U	50	U	1700	U	2000	U
PHENANTHRENE	UG/KG	BNA	340	U	400	U	10	U	350	U	400	U
PHENOL	UG/KG	BNA	340	U	400	U	10	U	350	U	400	U
PYRENE	UG/KG	BNA	340	U	400	U	10	U	350	U	400	U
ANTIMONY	UG/KG	CAC METALS	4.1	B	4.5	U	42.2	B	3.7	U	4.4	U
ARSENIC	UG/KG	CAC METALS	0.95	U	4.8		2.0	U	0.74	B	1.4	B
BARIUM	UG/KG	CAC METALS	9.0	U	349		80.8	B	38.9	B	99.7	
BERYLLIUM	UG/KG	CAC METALS	0.19	U	0.24	U	1.0	U	0.20	U	0.23	U
CADMIUM	UG/KG	CAC METALS	0.78	U	0.95	U	4.0	U	0.80	U	0.92	U
CHROMIUM	UG/KG	CAC METALS	2.4		18.1		4.0	U	7.0		17.6	
COBALT	UG/KG	CAC METALS	2.0	B	12.1		5.0	U	5.2	B	17.8	
COPPER	UG/KG	CAC METALS	2.1	B	28.0	U	6.0	U	12.6		27.2	
LEAD	UG/KG	CAC METALS	1.2	U	6.4	U	1.0	U	1.5		3.7	
MERCURY	UG/KG	CAC METALS	0.15	U	0.18	U	0.20	U	0.16	U	0.18	U
MOLYBDENUM	UG/KG	CAC METALS	1.4	U	1.7	U	22.8	B	1.4	U	1.6	U
NICKEL	UG/KG	CAC METALS	1.7	U	4.8	B	9.0	U	1.8	U	10.5	
SELENIUM	UG/KG	CAC METALS	0.40	U	0.47	U	1.0	B	0.41	U	0.46	U
SILVER	UG/KG	CAC METALS	0.58	U	0.71	U	4.4	B	0.60	U	1.1	B
THALLIUM	UG/KG	CAC METALS	0.40	U	0.47	U	10.0	U	0.41	U	0.46	U
VANADIUM	UG/KG	CAC METALS	10.1		55.2		30.2	B	32.0		84.0	
ZINC	UG/KG	CAC METALS	7.2	U	48.0	U	73.6		15.8		48.6	
CAC WET EXTRACTION	DATE	CAC WET EX										
LEAD	MG/L	CAC WET EX										
TOTAL CYANIDE	MG/L	CN										
TOTAL CYANIDE	UG/KG	CN	1	U	1	U			1	U	1	U
4,4'-DDD	UG/KG	PEST / PCB	16	U	20	U	0.10	U	17	U	20	U
4,4'-DDE	UG/KG	PEST / PCB	16	U	20	U	0.10	U	17	U	20	U
4,4'-DDT	UG/KG	PEST / PCB	16	U	20	U	0.10	U	17	U	20	U
ALDRIN	UG/KG	PEST / PCB	8.2	U	9.8	U	0.05	U	8.4	U	9.8	U
ALPHA-BHC	UG/KG	PEST / PCB	8.2	U	9.8	U	0.05	U	8.4	U	9.8	U
ALPHA-CHLORDANE	UG/KG	PEST / PCB	82	U	98	U	0.50	U	84	U	98	U
BETA-BHC	UG/KG	PEST / PCB	8.2	U	9.8	U	0.05	U	8.4	U	9.8	U
DELTA-BHC	UG/KG	PEST / PCB	8.2	U	9.8	U	0.05	U	8.4	U	9.8	U
DIELDRIN	UG/KG	PEST / PCB	16	U	20	U	0.10	U	17	U	20	U
ENDOSULFAN I	UG/KG	PEST / PCB	8.2	U	9.8	U	0.05	U	8.4	U	9.8	U
ENDOSULFAN II	UG/KG	PEST / PCB	16	U	20	U	0.10	U	17	U	20	U
ENDOSULFAN SULFATE	UG/KG	PEST / PCB	16	U	20	U	0.10	U	17	U	20	U
ENDRIN	UG/KG	PEST / PCB	16	U	20	U	0.10	U	17	U	20	U
ENDRIN KETONE	UG/KG	PEST / PCB	16	U	20	U	0.10	U	17	U	20	U
GAMMA-BHC (LINDANE)	UG/KG	PEST / PCB	8.2	U	9.8	U	0.05	U	8.4	U	9.8	U
GAMMA-CHLORDANE	UG/KG	PEST / PCB	82	U	98	U	0.50	U	84	U	98	U

NAVSTA-SAN DIEGO
SITE 7 WATER

		SAMPLE NUMBER:	NS7-MW2-S03-20		NS7-MW2-S03-20 FD		NS7-MW3-GW1		NS7-MW3-S01-5		NS7-MW3-S02-10	
		SAMPLING DATE:	01/22/91		01/22/91		02/15/91		01/23/91		01/23/91	
		BORING:	MW2		MW2		MW3		MW3		MW3	
		SITE:	NS7		NS7		NS7		NS7		NS7	
		DEPTH:	20		20 FD		NS7-MW3-GW1		5		10	
COMPOUND NAME	UNITS	TEST CODE	RESULT	QUALIFIER	RESULT	QUALIFIER	RESULT	QUALIFIER	RESULT	QUALIFIER	RESULT	QUALIFIER
1,2,4-TRICHLOROBENZENE	UG/KG	BNA	390	U	400	U	10	U	370	U	160	J
1,2-DICHLOROBENZENE	UG/KG	BNA	390	U	400	U	10	U	370	U	410	U
1,3-DICHLOROBENZENE	UG/KG	BNA	390	U	400	U	10	U	370	U	410	U
1,4-DICHLOROBENZENE	UG/KG	BNA	390	U	400	U	10	U	370	U	300	J
2,4,5-TRICHLOROPHENOL	UG/KG	BNA	1900	U	2000	U	50	U	1800	U	2000	U
2,4,6-TRICHLOROPHENOL	UG/KG	BNA	390	U	400	U	10	U	370	U	410	U
2,4-DICHLOROPHENOL	UG/KG	BNA	390	U	400	U	10	U	370	U	410	U
2,4-DIMETHYLPHENOL	UG/KG	BNA	390	U	400	U	10	U	370	U	410	U
2,4-DINITROPHENOL	UG/KG	BNA	1900	U	2000	U	50	U	1800	U	2000	U
2,4-DINITROTOLUENE	UG/KG	BNA	390	U	400	U	10	U	370	U	410	U
2,6-DINITROTOLUENE	UG/KG	BNA	390	U	400	U	10	U	370	U	410	U
2-CHLORONAPHTHALENE	UG/KG	BNA	390	U	400	U	10	U	370	U	410	U
2-CHLOROPHENOL	UG/KG	BNA	390	U	400	U	10	U	370	U	410	U
2-METHYLNAPHTHALENE	UG/KG	BNA	390	U	400	U	10	U	370	U	730	
2-METHYLPHENOL	UG/KG	BNA	390	U	400	U	10	U	370	U	410	U
2-NITROANILINE	UG/KG	BNA	1900	U	2000	U	50	U	1800	U	2000	U
2-NITROPHENOL	UG/KG	BNA	390	U	400	U	10	U	370	U	410	U
3,3'-DICHLOROBENZIDINE	UG/KG	BNA	780	U	810	U	20	U	740	U	820	U
3-NITROANILINE	UG/KG	BNA	1900	U	2000	U	50	U	1800	U	2000	U
4,6-DINITRO-2-METHYLPHENOL	UG/KG	BNA	1900	U	2000	U	50	U	1800	U	2000	U
4-BROMOPHENYL-PHENYLETHER	UG/KG	BNA	390	U	400	U	10	U	370	U	410	U
4-CHLORO-3-METHYLPHENOL	UG/KG	BNA	390	U	400	U	10	U	370	U	410	U
4-CHLOROANILINE	UG/KG	BNA	390	U	400	U	10	U	470		1900	
4-CHLOROPHENYL-PHENYLETHER	UG/KG	BNA	390	U	400	U	10	U	370	U	410	U
4-METHYLPHENOL	UG/KG	BNA	390	U	400	U	10	U	370	U	410	U
4-NITROANILINE	UG/KG	BNA	1900	U	2000	U	50	U	1800	U	2000	U
4-NITROPHENOL	UG/KG	BNA	1900	U	2000	U	50	U	1800	U	2000	U
ACENAPHTHENE	UG/KG	BNA	390	U	400	U	10	U	370	U	69	J
ACENAPHTHYLENE	UG/KG	BNA	390	U	400	U	10	U	370	U	410	U
ANTHRACENE	UG/KG	BNA	390	U	400	U	10	U	370	U	410	U
BENZO(A)ANTHRACENE	UG/KG	BNA	390	U	400	U	10	U	370	U	170	J
BENZO(A)PYRENE	UG/KG	BNA	390	U	400	U	10	U	370	U	410	U
BENZO(B)FLUORANTHENE	UG/KG	BNA	390	U	400	U	10	U	370	U	140	J
BENZO(G,H,I)PERYLENE	UG/KG	BNA	390	U	400	U	10	U	370	U	410	U
BENZO(K)FLUORANTHENE	UG/KG	BNA	390	U	400	U	10	U	370	U	410	U
BENZOIC ACID	UG/KG	BNA	1900	U	2000	U	50	U	1800	U	2000	U
BENZYL ALCOHOL	UG/KG	BNA	390	U	400	U	10	U	370	U	410	U
BIS(2-CHLOROETHOXY)METHANE	UG/KG	BNA	390	U	400	U	10	U	370	U	410	U
BIS(2-CHLOROETHYL)ETHER	UG/KG	BNA	390	U	400	U	10	U	370	U	410	U
BIS(2-CHLOROISOPROPYL)ETHER	UG/KG	BNA	390	U	400	U	10	U	370	U	410	U
BIS(2-ETHYLHEXYL)PHTHALATE	UG/KG	BNA	500		240	J	10	U	650		4400	
BUTYLBENZYLPHTHALATE	UG/KG	BNA	390	U	400	U	10	U	370	U	410	U
CHRYSENE	UG/KG	BNA	390	U	400	U	10	U	370	U	200	J
DI-N-BUTYLPHTHALATE	UG/KG	BNA	390	U	400	U	10	U	370	U	410	U
DI-N-OCTYLPHTHALATE	UG/KG	BNA	390	U	400	U	10	U	370	U	160	J
DIBENZ(A,H)ANTHRACENE	UG/KG	BNA	390	U	400	U	10	U	370	U	410	U
DIBENZOFURAN	UG/KG	BNA	390	U	400	U	10	U	370	U	410	U
DIETHYLPHTHALATE	UG/KG	BNA	390	U	400	U	10	U	370	U	410	U
DIMETHYLPHTHALATE	UG/KG	BNA	390	U	400	U	10	U	370	U	410	U
FLUORANTHENE	UG/KG	BNA	390	U	400	U	10	U	47	J	360	J
FLUORENE	UG/KG	BNA	390	U	400	U	10	U	370	U	110	J

NAVSTA-SAN DIEGO
SITE 7 WATER

		SAMPLE NUMBER:	NS7-MW2-S03-20		NS7-MW2-S03-20 FD		NS7-MW3-GW1		NS7-MW3-S01-5		NS7-MW3-S02-10	
		SAMPLING DATE:	01/22/91		01/22/91		02/15/91		01/23/91		01/23/91	
		BORING:	MW2		MW2		MW3		MW3		MW3	
		SITE:	NS7		NS7		NS7		NS7		NS7	
		DEPTH:	20		20 FD		NS7-MW3-GW1		5		10	
COMPOUND NAME	UNITS	TEST CODE	RESULT	QUALIFIER	RESULT	QUALIFIER	RESULT	QUALIFIER	RESULT	QUALIFIER	RESULT	QUALIFIER
HEXACHLOROBENZENE	UG/KG	BNA	390	U	400	U	10	U	370	U	410	U
HEXACHLOROBUTADIENE	UG/KG	BNA	390	U	400	U	10	U	370	U	410	U
HEXACHLOROCYCLOPENTADIENE	UG/KG	BNA	390	U	400	U	10	U	370	U	410	U
HEXACHLOROETHANE	UG/KG	BNA	390	U	400	U	10	U	370	U	410	U
INDENO(1,2,3-C,D)PYRENE	UG/KG	BNA	390	U	400	U	10	U	370	U	410	U
ISOPHORONE	UG/KG	BNA	390	U	400	U	10	U	370	U	410	U
N-NITROSO-DI-N-PROPYLAMINE	UG/KG	BNA	390	U	400	U	10	U	370	U	410	U
N-NITROSODIPHENYLAMINE (1)	UG/KG	BNA	390	U	400	U	10	U	370	U	410	U
NAPHTHALENE	UG/KG	BNA	390	U	400	U	10	U	370	U	410	U
NITROBENZENE	UG/KG	BNA	390	U	400	U	10	U	370	U	410	U
PENTACHLOROPHENOL	UG/KG	BNA	1900	U	2000	U	50	U	1800	U	2000	U
PHENANTHRENE	UG/KG	BNA	390	U	400	U	10	U	370	U	440	
PHENOL	UG/KG	BNA	390	U	400	U	10	U	370	U	410	U
PYRENE	UG/KG	BNA	390	U	400	U	10	U	57	J	390	J
ANTIMONY	UG/KG	CAC METALS	4.3	U	4.5	U	64.0		4.1	U	4.7	UJ
ARSENIC	UG/KG	CAC METALS	1.4	B	2.9		2.7	B	2.3		2.8	
BARIUM	UG/KG	CAC METALS	24.5	B	41.0	B	80.9	B	104		239	
BERYLLIUM	UG/KG	CAC METALS	0.23	U	0.24	U	1.6	B	0.22	U	0.25	U
CADMIUM	UG/KG	CAC METALS	0.90	U	0.71	U	4.0	U	1.8		4.6	
CHROMIUM	UG/KG	CAC METALS	8.1		14.3		6.0	B	31.3		85.4	
COBALT	UG/KG	CAC METALS	3.6	B	6.2	B	5.0	U	9.1	B	6.9	B
COPPER	UG/KG	CAC METALS	7.0		49.8		6.0	U	26.2	U	97.5	
LEAD	UG/KG	CAC METALS	1.9		6.7		1.0	U	13.3		77.7	
MERCURY	UG/KG	CAC METALS	0.18	U	0.18	U	0.20	U	0.25		1.5	
MOLYBDENUM	UG/KG	CAC METALS	1.6	U	1.6	U	7.0	U	2.5	B	2.8	B
NICKEL	UG/KG	CAC METALS	2.5	B	3.1	B	13.3	B	9.1		23.6	
SELENIUM	UG/KG	CAC METALS	0.46	U	0.24	U	14.0	B	0.44	U	0.49	U
SILVER	UG/KG	CAC METALS	0.68	U	0.47	U	8.3	B	4.2	U	16.5	
THALLIUM	UG/KG	CAC METALS	0.46	U	0.47	U	10.0	U	0.44	U	0.49	U
VANADIUM	UG/KG	CAC METALS	19.2		32.2		65.5		63.6		40.4	
ZINC	UG/KG	CAC METALS	20.8		38.7		29.9		78.8	U	277	U
CAC WET EXTRACTION	DATE	CAC WET EX										
LEAD	MG/L	CAC WET EX							0.964			
TOTAL CYANIDE	MG/L	CN										
TOTAL CYANIDE	UG/KG	CN	1	U	1	U			1	U	1	U
4,4'-DDD	UG/KG	PEST / PCB	19	U	20	U	0.1	U	36	U	40	UJ
4,4'-DDE	UG/KG	PEST / PCB	19	U	20	U	0.1	U	36	U	80	J
4,4'-DDT	UG/KG	PEST / PCB	19	U	20	U	0.1	U	36	U	40	UJ
ALDRIN	UG/KG	PEST / PCB	9.4	U	9.8	U	0.05	U	18	U	20	UJ
ALPHA-BHC	UG/KG	PEST / PCB	9.4	U	9.8	U	0.05	U	18	U	20	UJ
ALPHA-CHLORDANE	UG/KG	PEST / PCB	94	U	98	U	0.5	U	180	U	200	UJ
BETA-BHC	UG/KG	PEST / PCB	9.4	U	9.8	U	0.05	U	18	U	20	UJ
DELTA-BHC	UG/KG	PEST / PCB	9.4	U	9.8	U	0.05	U	18	U	20	UJ
DIELDRIN	UG/KG	PEST / PCB	19	U	20	U	0.1	U	36	U	40	UJ
ENDOSULFAN I	UG/KG	PEST / PCB	9.4	U	9.8	U	0.05	U	24	J	20	UJ
ENDOSULFAN II	UG/KG	PEST / PCB	19	U	20	U	0.1	U	36	U	40	UJ
ENDOSULFAN SULFATE	UG/KG	PEST / PCB	19	U	20	U	0.1	U	36	U	40	UJ
ENDRIN	UG/KG	PEST / PCB	19	U	20	U	0.1	U	36	U	40	UJ
ENDRIN KETONE	UG/KG	PEST / PCB	19	U	20	U	0.1	U	36	U	40	UJ
GAMMA-BHC (LINDANE)	UG/KG	PEST / PCB	9.4	U	9.8	U	0.05	U	18	U	20	UJ
GAMMA-CHLORDANE	UG/KG	PEST / PCB	94	U	98	U	0.5	U	180	U	200	UJ

NAVSTA-SAN DIEGO
SITE 7 WATER

		SAMPLE NUMBER:	NS7-MW3-S03-15		NS7-MW3-S04-20		NS7-TB		NS7-TB1		NS7-TB2	
		SAMPLING DATE:	01/23/91		01/23/91		01/23/91		01/22/91		01/22/91	
		BORING:	MW3		MW3							
		SITE:	NS7		NS7		NS7		NS7		NS7	
		DEPTH:	15		20		NS7-TB		NS7-TB1		NS7-TB2	
COMPOUND NAME	UNITS	TEST CODE	RESULT	QUALIFIER	RESULT	QUALIFIER	RESULT	QUALIFIER	RESULT	QUALIFIER	RESULT	QUALIFIER
1,2,4-TRICHLOROBENZENE	UG/KG	BNA	410	U	400	U						
1,2-DICHLOROBENZENE	UG/KG	BNA	410	U	400	U						
1,3-DICHLOROBENZENE	UG/KG	BNA	410	U	400	U						
1,4-DICHLOROBENZENE	UG/KG	BNA	410	U	400	U						
2,4,5-TRICHLOROPHENOL	UG/KG	BNA	2000	U	2000	U						
2,4,6-TRICHLOROPHENOL	UG/KG	BNA	410	U	400	U						
2,4-DICHLOROPHENOL	UG/KG	BNA	410	U	400	U						
2,4-DIMETHYLPHENOL	UG/KG	BNA	410	U	400	U						
2,4-DINITROPHENOL	UG/KG	BNA	2000	U	2000	U						
2,4-DINITROTOLUENE	UG/KG	BNA	410	U	400	U						
2,6-DINITROTOLUENE	UG/KG	BNA	410	U	400	U						
2-CHLORONAPHTHALENE	UG/KG	BNA	410	U	400	U						
2-CHLOROPHENOL	UG/KG	BNA	410	U	400	U						
2-METHYLNAPHTHALENE	UG/KG	BNA	410	U	400	U						
2-METHYLPHENOL	UG/KG	BNA	410	U	400	U						
2-NITROANILINE	UG/KG	BNA	2000	U	2000	U						
2-NITROPHENOL	UG/KG	BNA	410	U	400	U						
3,3'-DICHLOROBENZIDINE	UG/KG	BNA	820	U	810	U						
3-NITROANILINE	UG/KG	BNA	2000	U	2000	U						
4,6-DINITRO-2-METHYLPHENOL	UG/KG	BNA	2000	U	2000	U						
4-BROMOPHENYL-PHENYLETHER	UG/KG	BNA	410	U	400	U						
4-CHLORO-3-METHYLPHENOL	UG/KG	BNA	410	U	400	U						
4-CHLOROANILINE	UG/KG	BNA	410	U	400	U						
4-CHLOROPHENYL-PHENYLETHER	UG/KG	BNA	410	U	400	U						
4-METHYLPHENOL	UG/KG	BNA	410	U	400	U						
4-NITROANILINE	UG/KG	BNA	2000	U	2000	U						
4-NITROPHENOL	UG/KG	BNA	2000	U	2000	U						
ACENAPHTHENE	UG/KG	BNA	410	U	400	U						
ACENAPHTHYLENE	UG/KG	BNA	410	U	400	U						
ANTHRACENE	UG/KG	BNA	410	U	400	U						
BENZO(A)ANTHRACENE	UG/KG	BNA	410	U	400	U						
BENZO(A)PYRENE	UG/KG	BNA	410	U	400	U						
BENZO(B)FLUORANTHENE	UG/KG	BNA	410	U	400	U						
BENZO(G,H,I)PERYLENE	UG/KG	BNA	410	U	400	U						
BENZO(K)FLUORANTHENE	UG/KG	BNA	410	U	400	U						
BENZOIC ACID	UG/KG	BNA	2000	U	2000	U						
BENZYL ALCOHOL	UG/KG	BNA	410	U	400	U						
BIS(2-CHLOROETHOXY)METHANE	UG/KG	BNA	410	U	400	U						
BIS(2-CHLOROETHYL)ETHER	UG/KG	BNA	410	U	400	U						
BIS(2-CHLOROISOPROPYL)ETHER	UG/KG	BNA	410	U	400	U						
BIS(2-ETHYLHEXYL)PHTHALATE	UG/KG	BNA	490		530							
BUTYLBENZYLPHTHALATE	UG/KG	BNA	410	U	400	U						
CHRYSENE	UG/KG	BNA	410	U	400	U						
DI-N-BUTYLPHTHALATE	UG/KG	BNA	410	U	400	U						
DI-N-OCTYLPHTHALATE	UG/KG	BNA	410	U	400	U						
DIBENZ(A,H)ANTHRACENE	UG/KG	BNA	410	U	400	U						
DIBENZOFURAN	UG/KG	BNA	410	U	400	U						
DIETHYLPHTHALATE	UG/KG	BNA	410	U	400	U						
DIMETHYLPHTHALATE	UG/KG	BNA	410	U	400	U						
FLUORANTHENE	UG/KG	BNA	410	U	400	U						
FLUORENE	UG/KG	BNA	410	U	400	U						

NAVSTA-SAN DIEGO
SITE 7 WATER

		SAMPLE NUMBER:	NS7-MW3-S03-15		NS7-MW3-S04-20		NS7-TB		NS7-TB1		NS7-TB2	
		SAMPLING DATE:	01/23/91		01/23/91		01/23/91		01/22/91		01/22/91	
		BORING:	MW3		MW3							
		SITE:	NS7		NS7		NS7		NS7		NS7	
		DEPTH:	15		20		NS7-TB		NS7-TB1		NS7-TB2	
COMPOUND NAME	UNITS	TEST CODE	RESULT	QUALIFIER	RESULT	QUALIFIER	RESULT	QUALIFIER	RESULT	QUALIFIER	RESULT	QUALIFIER
HEXACHLOROBENZENE	UG/KG	BNA	410	U	400	U						
HEXACHLOROBUTADIENE	UG/KG	BNA	410	U	400	U						
HEXACHLOROCYCLOPENTADIENE	UG/KG	BNA	410	U	400	U						
HEXACHLOROETHANE	UG/KG	BNA	410	U	400	U						
INDENO(1,2,3-C,D)PYRENE	UG/KG	BNA	410	U	400	U						
ISOPHORONE	UG/KG	BNA	410	U	400	U						
N-NITROSO-DI-N-PROPYLAMINE	UG/KG	BNA	410	U	400	U						
N-NITROSODIPHENYLAMINE (1)	UG/KG	BNA	410	U	400	U						
NAPHTHALENE	UG/KG	BNA	410	U	400	U						
NITROBENZENE	UG/KG	BNA	410	U	400	U						
PENTACHLOROPHENOL	UG/KG	BNA	2000	U	2000	U						
PHENANTHRENE	UG/KG	BNA	410	U	400	U						
PHENOL	UG/KG	BNA	410	U	400	U						
PYRENE	UG/KG	BNA	410	U	400	U						
ANTIMONY	UG/KG	CAC METALS	4.6	U	4.2	U						
ARSENIC	UG/KG	CAC METALS	3.9		1.6	U						
BARIUM	UG/KG	CAC METALS	177		184							
BERYLLIUM	UG/KG	CAC METALS	0.24	U	0.22	U						
CADMIUM	UG/KG	CAC METALS	0.98	U	0.89	U						
CHROMIUM	UG/KG	CAC METALS	24.0		21.1							
COBALT	UG/KG	CAC METALS	9.7	B	19.8							
COPPER	UG/KG	CAC METALS	15.5	U	17.8	U						
LEAD	UG/KG	CAC METALS	11.2	U	2.7	U						
MERCURY	UG/KG	CAC METALS	0.18	U	0.18	U						
MOLYBDENUM	UG/KG	CAC METALS	1.7	U	1.6	U						
NICKEL	UG/KG	CAC METALS	5.1	B	7.5	B						
SELENIUM	UG/KG	CAC METALS	0.47	U	0.48	U						
SILVER	UG/KG	CAC METALS	1.7	U	1.9	U						
THALLIUM	UG/KG	CAC METALS	0.47	U	0.48	U						
VANADIUM	UG/KG	CAC METALS	66.3		68.4							
ZINC	UG/KG	CAC METALS	58.0	U	49.2	U						
CAC WET EXTRACTION	DATE	CAC WET EX										
LEAD	MG/L	CAC WET EX										
TOTAL CYANIDE	MG/L	CN										
TOTAL CYANIDE	UG/KG	CN	1	U	1	U						
4,4'-DDD	UG/KG	PEST / PCB	20	U	20	U						
4,4'-DDE	UG/KG	PEST / PCB	20	U	20	U						
4,4'-DDT	UG/KG	PEST / PCB	20	U	20	U						
ALDRIN	UG/KG	PEST / PCB	9.9	U	9.8	U						
ALPHA-BHC	UG/KG	PEST / PCB	9.9	U	9.8	U						
ALPHA-CHLORDANE	UG/KG	PEST / PCB	99	U	98	U						
BETA-BHC	UG/KG	PEST / PCB	9.9	U	9.8	U						
DELTA-BHC	UG/KG	PEST / PCB	9.9	U	9.8	U						
DIELDRIN	UG/KG	PEST / PCB	20	U	20	U						
ENDOSULFAN I	UG/KG	PEST / PCB	9.9	U	9.8	U						
ENDOSULFAN II	UG/KG	PEST / PCB	20	U	20	U						
ENDOSULFAN SULFATE	UG/KG	PEST / PCB	20	U	20	U						
ENDRIN	UG/KG	PEST / PCB	20	U	20	U						
ENDRIN KETONE	UG/KG	PEST / PCB	20	U	20	U						
GAMMA-BHC (LINDANE)	UG/KG	PEST / PCB	9.9	U	9.8	U						
GAMMA-CHLORDANE	UG/KG	PEST / PCB	99	U	98	U						

NAVSTA-SAN DIEGO
SITE 7 WATER

SAMPLE NUMBER: NS7-WAER
SAMPLING DATE: 01/23/91
BORING:
SITE: NS7
DEPTH: NS7-WAER

COMPOUND NAME	UNITS	TEST CODE	RESULT	QUALIFIER
1,2,4-TRICHLOROBENZENE	UG/KG	BNA	10	U
1,2-DICHLOROBENZENE	UG/KG	BNA	10	U
1,3-DICHLOROBENZENE	UG/KG	BNA	10	U
1,4-DICHLOROBENZENE	UG/KG	BNA	10	U
2,4,5-TRICHLOROPHENOL	UG/KG	BNA	10	U
2,4,6-TRICHLOROPHENOL	UG/KG	BNA	10	U
2,4-DICHLOROPHENOL	UG/KG	BNA	10	U
2,4-DIMETHYLPHENOL	UG/KG	BNA	10	U
2,4-DINITROPHENOL	UG/KG	BNA	50	U
2,4-DINITROTOLUENE	UG/KG	BNA	10	U
2,6-DINITROTOLUENE	UG/KG	BNA	10	U
2-CHLORONAPHTHALENE	UG/KG	BNA	10	U
2-CHLOROPHENOL	UG/KG	BNA	10	U
2-METHYLNAPHTHALENE	UG/KG	BNA	10	U
2-METHYLPHENOL	UG/KG	BNA	10	U
2-NITROANILINE	UG/KG	BNA	50	U
2-NITROPHENOL	UG/KG	BNA	10	U
3,3'-DICHLOROBENZIDINE	UG/KG	BNA	20	U
3-NITROANILINE	UG/KG	BNA	50	U
4,6-DINITRO-2-METHYLPHENOL	UG/KG	BNA	50	U
4-BROMOPHENYL-PHENYLETHER	UG/KG	BNA	10	U
4-CHLORO-3-METHYLPHENOL	UG/KG	BNA	10	U
4-CHLOROANILINE	UG/KG	BNA	10	U
4-CHLOROPHENYL-PHENYLETHER	UG/KG	BNA	10	U
4-METHYLPHENOL	UG/KG	BNA	10	U
4-NITROANILINE	UG/KG	BNA	50	U
4-NITROPHENOL	UG/KG	BNA	50	U
ACENAPHTHENE	UG/KG	BNA	10	U
ACENAPHTHYLENE	UG/KG	BNA	10	U
ANTHRACENE	UG/KG	BNA	10	U
BENZO(A)ANTHRACENE	UG/KG	BNA	10	U
BENZO(A)PYRENE	UG/KG	BNA	10	U
BENZO(B)FLUORANTHENE	UG/KG	BNA	10	U
BENZO(G,H,I)PERYLENE	UG/KG	BNA	10	U
BENZO(K)FLUORANTHENE	UG/KG	BNA	10	U
BENZOIC ACID	UG/KG	BNA	50	U
BENZYL ALCOHOL	UG/KG	BNA	10	U
BIS(2-CHLOROETHOXY)METHANE	UG/KG	BNA	10	U
BIS(2-CHLOROETHYL)ETHER	UG/KG	BNA	10	U
BIS(2-CHLOROISOPROPYL)ETHER	UG/KG	BNA	10	U
BIS(2-ETHYLHEXYL)PHTHALATE	UG/KG	BNA	6	J
BUTYLBENZYLPHTHALATE	UG/KG	BNA	10	U
CHRYSENE	UG/KG	BNA	10	U
DI-N-BUTYLPHTHALATE	UG/KG	BNA	10	U
DI-N-OCTYLPHTHALATE	UG/KG	BNA	10	U
DIBENZ(A,H)ANTHRACENE	UG/KG	BNA	10	U
DIBENZOFURAN	UG/KG	BNA	10	U
DIETHYLPHTHALATE	UG/KG	BNA	10	U
DIMETHYLPHTHALATE	UG/KG	BNA	10	U
FLUORANTHENE	UG/KG	BNA	10	U
FLUORENE	UG/KG	BNA	10	U

NAVSTA-SAN DIEGO
SITE 7 WATER

SAMPLE NUMBER: NS7-WAER
SAMPLING DATE: 01/23/91
BORING:
SITE: NS7
DEPTH: NS7-WAER

COMPOUND NAME	UNITS	TEST CODE	RESULT	QUALIFIER
HEXACHLOROBENZENE	UG/KG	BNA	10	U
HEXACHLOROBUTADIENE	UG/KG	BNA	10	U
HEXACHLOROCYCLOPENTADIENE	UG/KG	BNA	10	U
HEXACHLOROETHANE	UG/KG	BNA	10	U
INDENO(1,2,3-C,D)PYRENE	UG/KG	BNA	10	U
ISOPHORONE	UG/KG	BNA	10	U
N-NITROSO-DI-N-PROPYLAMINE	UG/KG	BNA	10	U
N-NITROSODIPHENYLAMINE (1)	UG/KG	BNA	10	U
NAPHTHALENE	UG/KG	BNA	10	U
NITROBENZENE	UG/KG	BNA	10	U
PENTACHLOROPHENOL	UG/KG	BNA	50	U
PHENANTHRENE	UG/KG	BNA	10	U
PHENOL	UG/KG	BNA	11	
PYRENE	UG/KG	BNA	10	U
ANTIMONY	UG/KG	CAC METALS	19.0	U
ARSENIC	UG/KG	CAC METALS	1.9	B
BARIUM	UG/KG	CAC METALS	33.2	B
BERYLLIUM	UG/KG	CAC METALS	1.0	U
CADMIUM	UG/KG	CAC METALS	4.0	U
CHROMIUM	UG/KG	CAC METALS	4.0	U
COBALT	UG/KG	CAC METALS	5.0	U
COPPER	UG/KG	CAC METALS	65.4	
LEAD	UG/KG	CAC METALS	10.3	
MERCURY	UG/KG	CAC METALS	0.20	U
MOLYBDENUM	UG/KG	CAC METALS	7.0	U
NICKEL	UG/KG	CAC METALS	9.0	U
SELENIUM	UG/KG	CAC METALS	2.0	U
SILVER	UG/KG	CAC METALS	4.0	B
THALLIUM	UG/KG	CAC METALS	2.0	U
VANADIUM	UG/KG	CAC METALS	5.5	B
ZINC	UG/KG	CAC METALS	742	
CAC WET EXTRACTION	DATE	CAC WET EX		
LEAD	MG/L	CAC WET EX		
TOTAL CYANIDE	MG/L	CN	0.02	U
TOTAL CYANIDE	UG/KG	CN		
4,4'-DDD	UG/KG	PEST / PCB	0.1	U
4,4'-DDE	UG/KG	PEST / PCB	0.1	U
4,4'-DDT	UG/KG	PEST / PCB	0.1	U
ALDRIN	UG/KG	PEST / PCB	0.05	U
ALPHA-BHC	UG/KG	PEST / PCB	0.05	U
ALPHA-CHLORDANE	UG/KG	PEST / PCB	0.5	U
BETA-BHC	UG/KG	PEST / PCB	0.05	U
DELTA-BHC	UG/KG	PEST / PCB	0.05	U
DIELDRIN	UG/KG	PEST / PCB	0.1	U
ENDOSULFAN I	UG/KG	PEST / PCB	0.05	U
ENDOSULFAN II	UG/KG	PEST / PCB	0.1	U
ENDOSULFAN SULFATE	UG/KG	PEST / PCB	0.1	U
ENDRIN	UG/KG	PEST / PCB	0.1	U
ENDRIN KETONE	UG/KG	PEST / PCB	0.1	U
GAMMA-BHC (LINDANE)	UG/KG	PEST / PCB	0.05	U
GAMMA-CHLORDANE	UG/KG	PEST / PCB	0.5	U

NAVSTA-SAN DIEGO
SITE 8 WATER

		SAMPLE NUMBER:	NS8-MW1-GW1		NS8-MW2-GW1		NS8-MW3-GW1		NS8-MW4-GW1		NS8-MW5-GW1	
		SAMPLING DATE:	02/14/91		02/12/91		02/13/91		02/12/91		02/13/91	
		BORING:	MW1		MW2		MW3		MW4		MW5	
		SITE:	NS8		NS8		NS8		NS8		NS8	
		DEPTH:	NS8-MW1-GW1		NS8-MW2-GW1		NS8-MW3-GW1		NS8-MW4-GW1		NS8-MW5-GW1	
COMPOUND NAME	UNITS	TEST CODE	RESULT	QUALIFIER	RESULT	QUALIFIER	RESULT	QUALIFIER	RESULT	QUALIFIER	RESULT	QUALIFIER
1,2,4-TRICHLOROBENZENE	UG/KG	BNA	10	U	10	U	10	U	10	U	10	U
1,2-DICHLOROBENZENE	UG/KG	BNA	10	U	10	U	10	U	10	U	10	U
1,3-DICHLOROBENZENE	UG/KG	BNA	10	U	10	U	10	U	10	U	10	U
1,4-DICHLOROBENZENE	UG/KG	BNA	10	U	10	U	10	U	10	U	10	U
2,4,5-TRICHLOROPHENOL	UG/KG	BNA	50	U	50	U	50	U	50	U	50	U
2,4,6-TRICHLOROPHENOL	UG/KG	BNA	10	U	10	U	10	U	10	U	10	U
2,4-DICHLOROPHENOL	UG/KG	BNA	10	U	10	U	10	U	10	U	10	U
2,4-DIMETHYLPHENOL	UG/KG	BNA	10	U	10	U	10	U	10	U	10	U
2,4-DINITROPHENOL	UG/KG	BNA	50	U	50	U	50	U	50	U	50	U
2,4-DINITROTOLUENE	UG/KG	BNA	10	U	10	U	10	U	10	U	10	U
2,6-DINITROTOLUENE	UG/KG	BNA	10	U	10	U	10	U	10	U	10	U
2-CHLORONAPHTHALENE	UG/KG	BNA	10	U	10	U	10	U	10	U	10	U
2-CHLOROPHENOL	UG/KG	BNA	10	U	10	U	10	U	10	U	10	U
2-METHYLNAPHTHALENE	UG/KG	BNA	10	U	10	U	10	U	7	J	10	U
2-METHYLPHENOL	UG/KG	BNA	10	U	10	U	10	U	10	U	10	U
2-NITROANILINE	UG/KG	BNA	50	U	50	U	50	U	50	U	50	U
2-NITROPHENOL	UG/KG	BNA	10	U	10	U	10	U	10	U	10	U
3,3'-DICHLOROBENZIDINE	UG/KG	BNA	20	U	20	U	20	U	20	U	20	U
3-NITROANILINE	UG/KG	BNA	50	U	50	U	50	U	50	U	50	U
4,6-DINITRO-2-METHYLPHENOL	UG/KG	BNA	50	U	50	U	50	U	50	U	50	U
4-BROMOPHENYL-PHENYLETHER	UG/KG	BNA	10	U	10	U	10	U	10	U	10	U
4-CHLORO-3-METHYLPHENOL	UG/KG	BNA	10	U	10	U	10	U	10	U	10	U
4-CHLOROANILINE	UG/KG	BNA	10	U	10	U	10	U	10	U	10	U
4-CHLOROPHENYL-PHENYLETHER	UG/KG	BNA	10	U	10	U	10	U	10	U	10	U
4-METHYLPHENOL	UG/KG	BNA	10	U	10	U	10	U	10	U	10	U
4-NITROANILINE	UG/KG	BNA	50	U	50	U	50	U	50	U	50	U
4-NITROPHENOL	UG/KG	BNA	50	U	50	U	50	U	50	U	50	U
ACENAPHTHENE	UG/KG	BNA	10	U	10	U	10	U	10	U	10	U
ACENAPHTHYLENE	UG/KG	BNA	10	U	10	U	10	U	10	U	10	U
ANTHRACENE	UG/KG	BNA	10	U	10	U	10	U	10	U	10	U
BENZO(A)ANTHRACENE	UG/KG	BNA	10	U	10	U	10	U	10	U	10	U
BENZO(A)PYRENE	UG/KG	BNA	10	U	10	U	10	U	10	U	10	U
BENZO(B)FLUORANTHENE	UG/KG	BNA	10	U	10	U	10	U	10	U	10	U
BENZO(G,H,I)PERYLENE	UG/KG	BNA	10	U	10	U	10	U	10	U	10	U
BENZO(K)FLUORANTHENE	UG/KG	BNA	10	U	10	U	10	U	10	U	10	U
BENZOIC ACID	UG/KG	BNA	50	U	50	U	50	U	50	U	50	U
BENZYL ALCOHOL	UG/KG	BNA	10	U	10	U	10	U	10	U	10	U
BIS(2-CHLOROETHOXY)METHANE	UG/KG	BNA	10	U	10	U	10	U	10	U	10	U
BIS(2-CHLOROETHYL)ETHER	UG/KG	BNA	10	U	10	U	10	U	10	U	10	U
BIS(2-CHLOROISOPROPYL)ETHER	UG/KG	BNA	10	U	10	U	10	U	10	U	10	U
BIS(2-ETHYLHEXYL)PHTHALATE	UG/KG	BNA	10	U	10	U	10	U	1	J	10	U
BUTYLBENZYLPHTHALATE	UG/KG	BNA	10	U	10	U	10	U	10	U	10	U
CHRYSENE	UG/KG	BNA	10	U	10	U	10	U	10	U	10	U
DI-N-BUTYLPHTHALATE	UG/KG	BNA	10	U	10	U	10	U	10	U	10	U
DI-N-OCTYLPHTHALATE	UG/KG	BNA	10	U	10	U	10	U	10	U	10	U
DIBENZ(A,H)ANTHRACENE	UG/KG	BNA	10	U	10	U	10	U	10	U	10	U
DIBENZOFURAN	UG/KG	BNA	10	U	10	U	10	U	10	U	10	U
DIETHYLPHTHALATE	UG/KG	BNA	10	U	10	U	10	U	10	U	10	U
DIMETHYLPHTHALATE	UG/KG	BNA	10	U	10	U	10	U	10	U	10	U
FLUORANTHENE	UG/KG	BNA	10	U	10	U	10	U	10	U	10	U
FLUORENE	UG/KG	BNA	10	U	10	U	1	J	2	J	10	U

NAVSTA-SAN DIEGO
SITE 8 WATER

		SAMPLE NUMBER:	NS8-MW1-GW1		NS8-MW2-GW1		NS8-MW3-GW1		NS8-MW4-GW1		NS8-MW5-GW1	
		SAMPLING DATE:	02/14/91		02/12/91		02/13/91		02/12/91		02/13/91	
		BORING:	MW1		MW2		MW3		MW4		MW5	
		SITE:	NS8		NS8		NS8		NS8		NS8	
		DEPTH:	NS8-MW1-GW1		NS8-MW2-GW1		NS8-MW3-GW1		NS8-MW4-GW1		NS8-MW5-GW1	
COMPOUND NAME	UNITS	TEST CODE	RESULT	QUALIFIER	RESULT	QUALIFIER	RESULT	QUALIFIER	RESULT	QUALIFIER	RESULT	QUALIFIER
HEXACHLOROBENZENE	UG/KG	BNA	10	U	10	U	10	U	10	U	10	U
HEXACHLOROBUTADIENE	UG/KG	BNA	10	U	10	U	10	U	10	U	10	U
HEXACHLOROCYCLOPENTADIENE	UG/KG	BNA	10	U	10	U	10	U	10	U	10	U
HEXACHLOROETHANE	UG/KG	BNA	10	U	10	U	10	U	10	U	10	U
INDENO(1,2,3-C,D)PYRENE	UG/KG	BNA	10	U	10	U	10	U	10	U	10	U
ISOPHORONE	UG/KG	BNA	10	U	10	U	10	U	10	U	10	U
N-NITROSO-DI-N-PROPYLAMINE	UG/KG	BNA	10	U	10	U	10	U	10	U	10	U
N-NITROSODIPHENYLAMINE (1)	UG/KG	BNA	10	U	10	U	10	U	10	U	10	U
NAPHTHALENE	UG/KG	BNA	10	U	10	U	10	U	10	U	10	U
NITROBENZENE	UG/KG	BNA	10	U	10	U	10	U	10	U	10	U
PENTACHLOROPHENOL	UG/KG	BNA	50	U	50	U	50	U	50	U	50	U
PHENANTHRENE	UG/KG	BNA	10	U	10	U	10	U	10	U	10	U
PHENOL	UG/KG	BNA	9	J	10	U	5	J	10	U	10	U
PYRENE	UG/KG	BNA	10	U	10	U	10	U	10	U	10	U
ANTIMONY	UG/KG	CAC METALS	34.0	B	29.9	B	42.3	B	36.0	B	28.8	B
ARSENIC	UG/KG	CAC METALS	1.7	B	1.7	B	1.1	B	1.0	U	4.5	B
BARIUM	UG/KG	CAC METALS	139	B	72.0	B	104	B	643		93.0	B
BERYLLIUM	UG/KG	CAC METALS	1.0	U	1.0	U	1.0	U	1.0	U	1.0	U
CADMIUM	UG/KG	CAC METALS	4.0	U	4.0	U	4.0	U	4.0	U	4.0	U
CHROMIUM	UG/KG	CAC METALS	4.0	U	4.0	U	4.0	U	4.0	U	4.0	U
COBALT	UG/KG	CAC METALS	5.0	U	5.0	U	5.0	U	5.0	U	5.0	U
COPPER	UG/KG	CAC METALS	6.5	U	7.4	B	7.0	B	6.0	U	6.0	U
LEAD	UG/KG	CAC METALS	1.0	UJ	1.0	U	1.0	U	1.0	U	1.0	U
MERCURY	UG/KG	CAC METALS	0.20	U	0.20	U	0.20	U	0.20	U	0.20	U
MOLYBDENUM	UG/KG	CAC METALS	7.0	UR	24.7	B	14.7	B	7.0	U	12.7	B
NICKEL	UG/KG	CAC METALS	9.0	U	9.0	U	9.0	U	9.0	U	9.8	B
SELENIUM	UG/KG	CAC METALS	1.0	UR	1.0	U	1.0	U	1.0	U	1.0	U
SILVER	UG/KG	CAC METALS	3.0	UR	5.0	B	7.1	B	3.0	U	3.0	U
THALLIUM	UG/KG	CAC METALS	1.0	UJ	1.0	B	1.0	U	1.0	U	1.0	U
VANADIUM	UG/KG	CAC METALS	17.9	U	32.6	B	45.1	B	15.2	B	37.6	B
ZINC	UG/KG	CAC METALS	16.6	U	25.5		43.1		21.6		13.6	B
4,4'-DDD	UG/KG	PEST / PCB	0.10	U			0.1	U	0.1	U	0.1	U
4,4'-DDE	UG/KG	PEST / PCB	0.10	U	0.1	U	0.1	U	0.1	U	0.1	U
4,4'-DDT	UG/KG	PEST / PCB	0.10	U	0.1	U	0.1	U	0.1	U	0.1	U
ALDRIN	UG/KG	PEST / PCB	0.05	U	0.05	U	0.05	U	0.05	U	0.05	U
ALPHA-BHC	UG/KG	PEST / PCB	0.05	U	0.05	U	0.05	U	0.05	U	0.05	U
ALPHA-CHLORDANE	UG/KG	PEST / PCB	0.50	U	0.5	U	0.5	U	0.5	U	0.5	U
BETA-BHC	UG/KG	PEST / PCB	0.05	U	0.05	U	0.05	U	0.05	U	0.05	U
DELTA-BHC	UG/KG	PEST / PCB	0.05	U	0.05	U	0.05	U	0.05	U	0.05	U
DIELDRIN	UG/KG	PEST / PCB	0.10	U	0.1	U	0.1	U	0.1	U	0.1	U
ENDOSULFAN I	UG/KG	PEST / PCB	0.05	U	0.05	U	0.05	U	0.05	U	0.05	U
ENDOSULFAN II	UG/KG	PEST / PCB	0.10	U	0.1	U	0.1	U	0.1	U	0.1	U
ENDOSULFAN SULFATE	UG/KG	PEST / PCB	0.10	U	0.1	U	0.1	U	0.1	U	0.1	U
ENDRIN	UG/KG	PEST / PCB	0.10	U	0.1	U	0.1	U	0.1	U	0.1	U
ENDRIN KETONE	UG/KG	PEST / PCB	0.10	U	0.1	U	0.1	U	0.1	U	0.1	U
GAMMA-BHC (LINDANE)	UG/KG	PEST / PCB	0.05	U	0.05	U	0.05	U	0.05	U	0.05	U
GAMMA-CHLORDANE	UG/KG	PEST / PCB	0.50	U	0.5	U	0.5	U	0.5	U	0.5	U
HEPTACHLOR	UG/KG	PEST / PCB	0.05	U	0.05	U	0.05	U	0.05	U	0.05	U
HEPTACHLOR EPOXIDE	UG/KG	PEST / PCB	0.05	U	0.05	U	0.05	U	0.05	U	0.05	U
METHOXYCHLOR	UG/KG	PEST / PCB	0.50	U	0.5	U	0.5	U	0.5	U	0.5	U
PCB-1016	UG/KG	PEST / PCB	0.50	U	0.5	U	0.5	U	0.5	U	0.5	U

NAVSTA-SAN DIEGO
SITE 8 WATER

		SAMPLE NUMBER:	NS8-MW1-GW1		NS8-MW2-GW1		NS8-MW3-GW1		NS8-MW4-GW1		NS8-MW5-GW1	
		SAMPLING DATE:	02/14/91		02/12/91		02/13/91		02/12/91		02/13/91	
		BORING:	MW1		MW2		MW3		MW4		MW5	
		SITE:	NS8		NS8		NS8		NS8		NS8	
		DEPTH:	NS8-MW1-GW1		NS8-MW2-GW1		NS8-MW3-GW1		NS8-MW4-GW1		NS8-MW5-GW1	
COMPOUND NAME	UNITS	TEST CODE	RESULT	QUALIFIER	RESULT	QUALIFIER	RESULT	QUALIFIER	RESULT	QUALIFIER	RESULT	QUALIFIER
PCB-1221	UG/KG	PEST / PCB	0.50	U	0.5	U	0.5	U	0.5	U	0.5	U
PCB-1232	UG/KG	PEST / PCB	0.50	U	0.5	U	0.5	U	0.5	U	0.5	U
PCB-1242	UG/KG	PEST / PCB	0.50	U	0.5	U	0.5	U	0.5	U	0.5	U
PCB-1248	UG/KG	PEST / PCB	0.50	U	0.5	U	0.5	U	0.5	U	0.5	U
PCB-1254	UG/KG	PEST / PCB	1.00	U	1.	U	1	U	1	U	1	U
PCB-1260	UG/KG	PEST / PCB	1.00	U	1.	U	1	U	1	U	1	U
TOXAPHENE	UG/KG	PEST / PCB	1.00	U	1.	U	1	U	1	U	1	U
DIESEL	UG/KG	TPHC	350	Z	250	U	6370		4320	Z	250	U
JP4	UG/KG	TPHC	410	Z	250	U	3460	Z	2760	Z	250	U
JP5	UG/KG	TPHC	250		250	U	2630	Z	2460		250	U
1,1,1-TRICHLOROETHANE	UG/KG	VOA	5	U	5	U	5	U	5	U	5	U
1,1,2,2-TETRACHLOROETHANE	UG/KG	VOA	5	U	5	U	5	U	5	U	5	U
1,1,2-TRICHLOROETHANE	UG/KG	VOA	5	U	5	U	5	U	5	U	5	U
1,1-DICHLOROETHANE	UG/KG	VOA	30		5	U	4	J	5	U	5	U
1,1-DICHLOROETHENE	UG/KG	VOA	5	U	5	U	5	U	5	U	5	U
1,2-DICHLOROETHANE	UG/KG	VOA	5	U	5	U	5	U	5	U	5	U
1,2-DICHLOROETHENE (TOTAL)	UG/KG	VOA	21		5	U	5	U	5	U	5	U
1,2-DICHLOROPROPANE	UG/KG	VOA	5	U	5	U	5	U	5	U	5	U
2-BUTANONE	UG/KG	VOA	10	U	10	U	10	U	10	U	10	U
2-HEXANONE	UG/KG	VOA	10	U	10	U	10	U	10	U	10	U
4-METHYL-2-PENTANONE	UG/KG	VOA	10	U	10	U	10	U	10	U	10	U
ACETONE	UG/KG	VOA	10	U	10	U	10	U	10	U	11	U
BENZENE	UG/KG	VOA	180		5	U	28		17		5	U
BROMODICHLOROMETHANE	UG/KG	VOA	5	U	5	U	5	U	5	U	5	U
BROMOFORM	UG/KG	VOA	5	U	5	U	5	U	5	U	5	U
BROMOMETHANE	UG/KG	VOA	10	U	10	U	10	U	10	U	10	U
CARBON DISULFIDE	UG/KG	VOA	5	U	5	U	3	J	5	U	1	J
CARBON TETRACHLORIDE	UG/KG	VOA	5	U	5	U	5	U	5	U	5	U
CHLOROBENZENE	UG/KG	VOA	5	U	5	U	5	U	5	U	5	U
CHLOROETHANE	UG/KG	VOA	10	U	10	U	6	J	10	U	10	U
CHLOROFORM	UG/KG	VOA	5	U	5	U	5	U	5	U	5	U
CHLOROMETHANE	UG/KG	VOA	10	U	10	U	10	U	10	U	10	U
CIS-1,3-DICHLOROPROPENE	UG/KG	VOA	5	U	5	U	5	U	5	U	5	U
DIBROMOCHLOROMETHANE	UG/KG	VOA	5	U	5	U	5	U	5	U	5	U
ETHYLBENZENE	UG/KG	VOA	12		5	U	5	U	5	U	5	U
METHYLENE CHLORIDE	UG/KG	VOA	5	U	5	U	5	U	6	U	5	U
STYRENE	UG/KG	VOA	5	U	5	U	5	U	5	U	5	U
TETRACHLOROETHENE	UG/KG	VOA	5	U	5	U	5	U	5	U	5	U
TOLUENE	UG/KG	VOA	1	J	5	U	5	U	2	J	5	U
TRANS-1,3-DICHLOROPROPENE	UG/KG	VOA	5	U	5	U	5	U	5	U	5	U
TRICHLOROETHENE	UG/KG	VOA	5	U	5	U	5	U	5	U	5	U
VINYL ACETATE	UG/KG	VOA	10	U	10	U	10	U	10	U	10	U
VINYL CHLORIDE	UG/KG	VOA	8	J	10	U	10	U	10	U	10	U
XYLENES (TOTAL)	UG/KG	VOA	5	U	5	U	5	U	6		5	U

NAVSTA-SAN DIEGO
SITE 8 WATER

		SAMPLE NUMBER:	NS8-MW6-GW1		NS8-MW7-GW1		NS8-MW7-GW1-FD	
		SAMPLING DATE:	02/14/91		02/13/91		02/13/91	
		BORING:	MW6		MW7		MW7	
		SITE:	NS8		NS8		NS8	
		DEPTH:	NS8-MW6-GW1		NS8-MW7-GW1		FD	
COMPOUND NAME	UNITS	TEST CODE	RESULT	QUALIFIER	RESULT	QUALIFIER	RESULT	QUALIFIER
1,2,4-TRICHLOROBENZENE	UG/KG	BNA	10	U	10	U	10	U
1,2-DICHLOROBENZENE	UG/KG	BNA	10	U	10	U	10	U
1,3-DICHLOROBENZENE	UG/KG	BNA	10	U	10	U	10	U
1,4-DICHLOROBENZENE	UG/KG	BNA	10	U	10	U	10	U
2,4,5-TRICHLOROPHENOL	UG/KG	BNA	50	U	50	U	50	U
2,4,6-TRICHLOROPHENOL	UG/KG	BNA	10	U	10	U	10	U
2,4-DICHLOROPHENOL	UG/KG	BNA	10	U	10	U	10	U
2,4-DIMETHYLPHENOL	UG/KG	BNA	10	U	10	U	10	U
2,4-DINITROPHENOL	UG/KG	BNA	50	U	50	U	50	U
2,4-DINITROTOLUENE	UG/KG	BNA	10	U	10	U	10	U
2,6-DINITROTOLUENE	UG/KG	BNA	10	U	10	U	10	U
2-CHLORONAPHTHALENE	UG/KG	BNA	10	U	10	U	10	U
2-CHLOROPHENOL	UG/KG	BNA	10	U	10	U	10	U
2-METHYLNAPHTHALENE	UG/KG	BNA	10	U	10	U	10	U
2-METHYLPHENOL	UG/KG	BNA	10	U	10	U	10	U
2-NITROANILINE	UG/KG	BNA	50	U	50	U	50	U
2-NITROPHENOL	UG/KG	BNA	10	U	10	U	10	U
3,3'-DICHLOROBENZIDINE	UG/KG	BNA	20	U	20	U	20	U
3-NITROANILINE	UG/KG	BNA	50	U	50	U	50	U
4,6-DINITRO-2-METHYLPHENOL	UG/KG	BNA	50	U	50	U	50	U
4-BROMOPHENYL-PHENYLETHER	UG/KG	BNA	10	U	10	U	10	U
4-CHLORO-3-METHYLPHENOL	UG/KG	BNA	10	U	10	U	10	U
4-CHLOROANILINE	UG/KG	BNA	10	U	10	U	10	U
4-CHLOROPHENYL-PHENYLETHER	UG/KG	BNA	10	U	10	U	10	U
4-METHYLPHENOL	UG/KG	BNA	10	U	10	U	10	U
4-NITROANILINE	UG/KG	BNA	50	U	50	U	50	U
4-NITROPHENOL	UG/KG	BNA	50	U	50	U	50	U
ACENAPHTHENE	UG/KG	BNA	10	U	10	U	10	U
ACENAPHTHYLENE	UG/KG	BNA	10	U	10	U	10	U
ANTHRACENE	UG/KG	BNA	10	U	10	U	10	U
BENZO(A)ANTHRACENE	UG/KG	BNA	10	U	10	U	10	U
BENZO(A)PYRENE	UG/KG	BNA	10	U	10	U	10	U
BENZO(B)FLUORANTHENE	UG/KG	BNA	10	U	10	U	10	U
BENZO(G,H,I)PERYLENE	UG/KG	BNA	10	U	10	U	10	U
BENZO(K)FLUORANTHENE	UG/KG	BNA	10	U	10	U	10	U
BENZOIC ACID	UG/KG	BNA	50	U	50	U	50	U
BENZYL ALCOHOL	UG/KG	BNA	10	U	10	U	10	U
BIS(2-CHLOROETHOXY)METHANE	UG/KG	BNA	10	U	10	U	10	U
BIS(2-CHLOROETHYL)ETHER	UG/KG	BNA	10	U	10	U	10	U
BIS(2-CHLOROISOPROPYL)ETHER	UG/KG	BNA	10	U	10	U	10	U
BIS(2-ETHYLHEXYL)PHTHALATE	UG/KG	BNA	10	U	10	U	10	U
BUTYLBENZYLPHTHALATE	UG/KG	BNA	10	U	10	U	10	U
CHRYSENE	UG/KG	BNA	10	U	10	U	10	U
DI-N-BUTYLPHTHALATE	UG/KG	BNA	10	U	10	U	10	U
DI-N-OCTYLPHTHALATE	UG/KG	BNA	10	U	10	U	10	U
DIBENZ(A,H)ANTHRACENE	UG/KG	BNA	10	U	10	U	10	U
DIBENZOFURAN	UG/KG	BNA	10	U	10	U	10	U
DIETHYLPHTHALATE	UG/KG	BNA	10	U	10	U	10	U
DIMETHYLPHTHALATE	UG/KG	BNA	10	U	10	U	10	U
FLUORANTHENE	UG/KG	BNA	10	U	10	U	10	U
FLUORENE	UG/KG	BNA	10	U	10	U	10	U

NAVSTA-SAN DIEGO
SITE 8 WATER

		SAMPLE NUMBER:	NS8-MW6-GW1		NS8-MW7-GW1		NS8-MW7-GW1-FD	
		SAMPLING DATE:	02/14/91		02/13/91		02/13/91	
		BORING:	MW6		MW7		MW7	
		SITE:	NS8		NS8		NS8	
		DEPTH:	NS8-MW6-GW1		NS8-MW7-GW1		FD	
COMPOUND NAME	UNITS	TEST CODE	RESULT	QUALIFIER	RESULT	QUALIFIER	RESULT	QUALIFIER
HEXACHLOROBENZENE	UG/KG	BNA	10	U	10	U	10	U
HEXACHLOROBUTADIENE	UG/KG	BNA	10	U	10	U	10	U
HEXACHLOROCYCLOPENTADIENE	UG/KG	BNA	10	U	10	U	10	U
HEXACHLOROETHANE	UG/KG	BNA	10	U	10	U	10	U
INDENO(1,2,3-C,D)PYRENE	UG/KG	BNA	10	U	10	U	10	U
ISOPHORONE	UG/KG	BNA	10	U	10	U	10	U
N-NITROSO-DI-N-PROPYLAMINE	UG/KG	BNA	10	U	10	U	10	U
N-NITROSODIPHENYLAMINE (1)	UG/KG	BNA	10	U	10	U	10	U
NAPHTHALENE	UG/KG	BNA	10	U	10	U	10	U
NITROBENZENE	UG/KG	BNA	10	U	10	U	10	U
PENTACHLOROPHENOL	UG/KG	BNA	50	U	50	U	50	U
PHENANTHRENE	UG/KG	BNA	10	U	10	U	10	U
PHENOL	UG/KG	BNA	16	J	4	J	4	J
PYRENE	UG/KG	BNA	10	U	10	U	10	U
ANTIMONY	UG/KG	CAC METALS	62.8		25.8	B	51.5	B
ARSENIC	UG/KG	CAC METALS	1.7	B	2.1	B	2.2	B
BARIUM	UG/KG	CAC METALS	98.6	B	111	B	102	B
BERYLLIUM	UG/KG	CAC METALS	1.0	U	1.0	U	1.0	U
CADMIUM	UG/KG	CAC METALS	4.0	U	4.0	U	4.0	U
CHROMIUM	UG/KG	CAC METALS	4.1	B	4.4	B	4.0	U
COBALT	UG/KG	CAC METALS	5.0	U	5.0	U	5.0	U
COPPER	UG/KG	CAC METALS	6.0	U	6.0	U	7.0	B
LEAD	UG/KG	CAC METALS	10.0	UJ	1.0	U	1.0	U
MERCURY	UG/KG	CAC METALS	0.20	U	0.20	U	0.20	U
MOLYBDENUM	UG/KG	CAC METALS	17.4	BJ	8.5	B	12.0	B
NICKEL	UG/KG	CAC METALS	10.3	U	10.1	B	14.2	B
SELENIUM	UG/KG	CAC METALS	10.0	UR	10.0	U	1.0	U
SILVER	UG/KG	CAC METALS	3.0	R	8.9	B	3.0	U
THALLIUM	UG/KG	CAC METALS	10.0	UJ	5.8	B	1.0	U
VANADIUM	UG/KG	CAC METALS	83.2		51.4		48.1	B
ZINC	UG/KG	CAC METALS	4.5	U	40.6		43.1	
4,4'-DDD	UG/KG	PEST / PCB	0.1	UJ	0.1	U	0.1	U
4,4'-DDE	UG/KG	PEST / PCB	0.1	UJ	0.1	U	0.1	U
4,4'-DDT	UG/KG	PEST / PCB	0.1	UJ	0.1	U	0.1	U
ALDRIN	UG/KG	PEST / PCB	0.05	UJ	0.05	U	0.05	U
ALPHA-BHC	UG/KG	PEST / PCB	0.05	UJ	0.05	U	0.05	U
ALPHA-CHLORDANE	UG/KG	PEST / PCB	0.5	UJ	0.5	U	0.5	U
BETA-BHC	UG/KG	PEST / PCB	0.05	UJ	0.05	U	0.05	U
DELTA-BHC	UG/KG	PEST / PCB	0.05	UJ	0.05	U	0.05	U
DIELDRIN	UG/KG	PEST / PCB	0.1	UJ	0.1	U	0.1	U
ENDOSULFAN I	UG/KG	PEST / PCB	0.05	UJ	0.05	U	0.05	U
ENDOSULFAN II	UG/KG	PEST / PCB	0.1	UJ	0.1	U	0.1	U
ENDOSULFAN SULFATE	UG/KG	PEST / PCB	0.1	UJ	0.1	U	0.1	U
ENDRIN	UG/KG	PEST / PCB	0.1	UJ	0.1	U	0.1	U
ENDRIN KETONE	UG/KG	PEST / PCB	0.1	UJ	0.1	U	0.1	U
GAMMA-BHC (LINDANE)	UG/KG	PEST / PCB	0.05	UJ	0.05	U	0.05	U
GAMMA-CHLORDANE	UG/KG	PEST / PCB	0.5	UJ	0.5	U	0.5	U
HEPTACHLOR	UG/KG	PEST / PCB	0.05	UJ	0.05	U	0.05	U
HEPTACHLOR EPOXIDE	UG/KG	PEST / PCB	0.05	UJ	0.05	U	0.05	U
METHOXYCHLOR	UG/KG	PEST / PCB	0.5	UJ	0.5	U	0.5	U
PCB-1016	UG/KG	PEST / PCB	0.5	UJ	0.5	U	0.5	U

NAVSTA-SAN DIEGO
SITE 8 WATER

		SAMPLE NUMBER:	NS8-MW6-GW1		NS8-MW7-GW1		NS8-MW7-GW1-FD	
		SAMPLING DATE:	02/14/91		02/13/91		02/13/91	
		BORING:	MW6		MW7		MW7	
		SITE:	NS8		NS8		NS8	
		DEPTH:	NS8-MW6-GW1		NS8-MW7-GW1		FD	
COMPOUND NAME	UNITS	TEST CODE	RESULT	QUALIFIER	RESULT	QUALIFIER	RESULT	QUALIFIER
PCB-1221	UG/KG	PEST / PCB	0.5	UJ	0.5	U	0.5	U
PCB-1232	UG/KG	PEST / PCB	0.5	UJ	0.5	U	0.5	U
PCB-1242	UG/KG	PEST / PCB	0.5	UJ	0.5	U	0.5	U
PCB-1248	UG/KG	PEST / PCB	0.5	UJ	0.5	U	0.5	U
PCB-1254	UG/KG	PEST / PCB	1	UJ	1	U	1	U
PCB-1260	UG/KG	PEST / PCB	1	UJ	1	U	1	U
TOXAPHENE	UG/KG	PEST / PCB	1	UJ	1	U	1	U
DIESEL	UG/KG	TPHC	1200	Z	250	U	250	U
JP4	UG/KG	TPHC	1440	Z	350	Z	280	Z
JP5	UG/KG	TPHC	1190		250	U	250	U
1,1,1-TRICHLOROETHANE	UG/KG	VOA	5	U	5	U	5	U
1,1,2,2-TETRACHLOROETHANE	UG/KG	VOA	5	U	5	U	5	U
1,1,2-TRICHLOROETHANE	UG/KG	VOA	5	U	5	U	5	U
1,1-DICHLOROETHANE	UG/KG	VOA	5	U	5	U	5	U
1,1-DICHLOROETHENE	UG/KG	VOA	5	U	5	U	5	U
1,2-DICHLOROETHANE	UG/KG	VOA	5	U	5	U	5	U
1,2-DICHLOROETHENE (TOTAL)	UG/KG	VOA	5	U	5	U	5	U
1,2-DICHLOROPROPANE	UG/KG	VOA	5	U	5	U	5	U
2-BUTANONE	UG/KG	VOA	10	U	10	U	10	U
2-HEXANONE	UG/KG	VOA	10	U	10	U	10	U
4-METHYL-2-PENTANONE	UG/KG	VOA	10	U	10	U	10	U
ACETONE	UG/KG	VOA	10	U	10	U	10	U
BENZENE	UG/KG	VOA	47		7		7	
BROMODICHLOROMETHANE	UG/KG	VOA	5	U	5	U	5	U
BROMOFORM	UG/KG	VOA	5	U	5	U	5	U
BROMOMETHANE	UG/KG	VOA	10	U	10	U	10	U
CARBON DISULFIDE	UG/KG	VOA	5	U	5	U	5	U
CARBON TETRACHLORIDE	UG/KG	VOA	5	U	5	U	5	U
CHLOROBENZENE	UG/KG	VOA	5	U	5	U	5	U
CHLOROETHANE	UG/KG	VOA	10	U	10	U	10	U
CHLOROFORM	UG/KG	VOA	5	U	5	U	5	U
CHLOROMETHANE	UG/KG	VOA	10	U	10	U	10	U
CIS-1,3-DICHLOROPROPENE	UG/KG	VOA	5	U	5	U	5	U
DIBROMOCHLOROMETHANE	UG/KG	VOA	5	U	5	U	5	U
ETHYLBENZENE	UG/KG	VOA	2	J	5	U	6	
METHYLENE CHLORIDE	UG/KG	VOA	5	U	5	U	5	U
STYRENE	UG/KG	VOA	5	U	5	U	5	U
TETRACHLOROETHENE	UG/KG	VOA	5	U	5	U	5	U
TOLUENE	UG/KG	VOA	5	U	1	J	5	U
TRANS-1,3-DICHLOROPROPENE	UG/KG	VOA	5	U	5	U	5	U
TRICHLOROETHENE	UG/KG	VOA	5	U	5	U	5	U
VINYL ACETATE	UG/KG	VOA	10	U	10	U	10	U
VINYL CHLORIDE	UG/KG	VOA	10	U	10	U	10	U
XYLENES (TOTAL)	UG/KG	VOA	5	U	5	U	2	J

DIOXINS

AND

DIBENZOFURANS

NAVSTA-SAN DIEGO
SITE 2 DIOXINS

		SAMPLE NUMBER:	NS2-BH02-S04-10-15		NS2-BH04-S03-10		NS2-BH05-S03-10		NS2-BH05-S03-5		NS2-BH05-S04-10	
		SAMPLING DATE:	02/04/91		02/05/91		02/05/91		02/05/91		02/05/91	
		BORING:	BH02		BH04		BH05		BH05		BH05	
		SITE:	NS2		NS2		NS2		NS2		NS2	
		DEPTH:	10-15		10		10		5		10	
COMPOUND NAME	UNITS	TEST CODE	RESULT	QUALIFIER	RESULT	QUALIFIER	RESULT	QUALIFIER	RESULT	QUALIFIER	RESULT	QUALIFIER
1,2,3,4,6,7,8-HpCDD	PG/G	DIOXINS					5.3	U	5.3	U		
1,2,3,4,6,7,8-HpCDF	PG/G	DIOXINS					1.3	U	1.3	U		
1,2,3,4,7,8-HxCDF	PG/G	DIOXINS					4.3	U	4.3	U		
1,2,3,6,7,8-HxCDD	PG/G	DIOXINS					5.5	U	5.5	U		
1,2,3,7,8-PeCDD	PG/G	DIOXINS					2.8	U	2.8	U		
1,2,3,7,8-PeCDF	PG/G	DIOXINS					1.9	U	1.9	U		
2,3,7,8-TCDD	PG/G	DIOXINS	0.82	U	39.1	U	1.6	U	.36	U	0.45	U
2,3,7,8-TCDF	PG/G	DIOXINS					2.7	U	2.7	U		
OCDD	PG/G	DIOXINS	665.0		10400.0		13.2	U	13.2	U	12.2	
TOTAL HpCDD	PG/G	DIOXINS	223.0		3990.0		5.6	U	5.6	U	7.2	
TOTAL HxCDD	PG/G	DIOXINS	100.0		810.0		6.6	U	6.6	U	3.5	U
TOTAL PeCDD	PG/G	DIOXINS	42.9	U	107.0		2.8	U	2.8	U	1.6	U
TOTAL TCDD	PG/G	DIOXINS	25.2	U	31.6	U	1.6	U	1.6	U	1.2	U
2,3,7,8-TCDD	PG/L	DIOXINS										
OCDD	PG/L	DIOXINS										
TOTAL HpCDD	PG/L	DIOXINS										
TOTAL HxCDD	PG/L	DIOXINS										
TOTAL PeCDD	PG/L	DIOXINS										
TOTAL TCDD	PG/L	DIOXINS										
1,2,3,4,6,7,8-HpCDF	PG/G	FURANS					1.3	U	1.3	U		
1,2,3,4,7,8-HxCDF	PG/G	FURANS					4.3	U	4.3	U		
1,2,3,7,8-PeCDF	PG/G	FURANS					1.9	U	1.9	U		
2,3,7,8-TCDF	PG/G	FURANS					2.7	U	2.7	U		
OCDF	PG/G	FURANS	47.6		66.4	U			5.5	U	1.5	U
TOTAL HpCDF	PG/G	FURANS	220.0		220.0				1.5	U	1.8	
TOTAL HxCDF	PG/G	FURANS	363.0	A	195.0	A			3.6	A	2.0	A
TOTAL PeCDF	PG/G	FURANS	461.0	A	737.0	A			9.9	A	8.5	A
TOTAL TCDF	PG/G	FURANS	468.0	A	1230.0	A			15.7	A	14.2	A
OCDF	PG/L	FURANS										
TOTAL HpCDF	PG/L	FURANS										
TOTAL HxCDF	PG/L	FURANS										
TOTAL PeCDF	PG/L	FURANS										
TOTAL TCDF	PG/L	FURANS										

NAVSTA-SAN DIEGO
SITE 2 DIOXINS

		SAMPLE NUMBER:	NS2-BH05-S04-5		NS2-ER-2-5-91-DIOX		NS2-FB-2-5-91-DIOX	
		SAMPLING DATE:	02/05/91		02/05/91		02/05/91	
		BORING:	BH05		ER		FB	
		SITE:	NS2		NS2		NS2	
		DEPTH:	5		5-91-DIOX		5-91-DIOX	
COMPOUND NAME	UNITS	TEST CODE	RESULT	QUALIFIER	RESULT	QUALIFIER	RESULT	QUALIFIER
1,2,3,4,6,7,8-HpCDD	PG/G	DIOXINS						
1,2,3,4,6,7,8-HpCDF	PG/G	DIOXINS						
1,2,3,4,7,8-HxCDF	PG/G	DIOXINS						
1,2,3,6,7,8-HxCDD	PG/G	DIOXINS						
1,2,3,7,8-PeCDD	PG/G	DIOXINS						
1,2,3,7,8-PeCDF	PG/G	DIOXINS						
2,3,7,8-TCDD	PG/G	DIOXINS	0.45	U				
2,3,7,8-TCDF	PG/G	DIOXINS						
OCDD	PG/G	DIOXINS	12.2					
TOTAL HpCDD	PG/G	DIOXINS	7.2					
TOTAL HxCDD	PG/G	DIOXINS	3.5	U				
TOTAL PeCDD	PG/G	DIOXINS	1.6	U				
TOTAL TCDD	PG/G	DIOXINS	1.2	U				
2,3,7,8-TCDD	PG/L	DIOXINS			22.3	U	51.6	U
OCDD	PG/L	DIOXINS			58.8	U	57.5	U
TOTAL HpCDD	PG/L	DIOXINS			39.1	U	21.2	U
TOTAL HxCDD	PG/L	DIOXINS			58.3	U	47.3	U
TOTAL PeCDD	PG/L	DIOXINS			72.6	U	40.2	U
TOTAL TCDD	PG/L	DIOXINS			29.3	U	32.0	U
1,2,3,4,6,7,8-HpCDF	PG/G	FURANS						
1,2,3,4,7,8-HxCDF	PG/G	FURANS						
1,2,3,7,8-PeCDF	PG/G	FURANS						
2,3,7,8-TCDF	PG/G	FURANS						
OCDF	PG/G	FURANS	1.5	U				
TOTAL HpCDF	PG/G	FURANS	1.8					
TOTAL HxCDF	PG/G	FURANS	2.0	A				
TOTAL PeCDF	PG/G	FURANS	8.5	A				
TOTAL TCDF	PG/G	FURANS	14.2	A				
OCDF	PG/L	FURANS			51.8	U	66.3	U
TOTAL HpCDF	PG/L	FURANS			33.2	U	24.0	U
TOTAL HxCDF	PG/L	FURANS			35.7	U	18.5	U
TOTAL PeCDF	PG/L	FURANS			33.4	U	18.7	U
TOTAL TCDF	PG/L	FURANS			32.7	U	21.2	U

NAVSTA-SAN DIEGO
SITE 8 DIOXINS

		SAMPLE NUMBER:	NS8-BH2-S01-10-15		NS8-BH3-S03-10-15		NS8-BH3-S07-10-FD		NS8-ER-1-30-91-DIO		NS8-FB-1-30-91-DIO	
		SAMPLING DATE:	01/30/91		02/01/91		02/01/91		01/30/91		01/30/91	
		BORING:	BH2		BH3		BH3		ER		FB	
		SITE:	NS8		NS8		NS8		NS8		NS8	
		DEPTH:	10-15		10-15		10-FD		30-91-DIOX		30-91-DIOX	
COMPOUND NAME	UNITS	TEST CODE	RESULT	QUALIFIER	RESULT	QUALIFIER	RESULT	QUALIFIER	RESULT	QUALIFIER	RESULT	QUALIFIER
2,3,7,8-TCDD	PG/G	DIOXINS	1.1	U	0.53	U	0.39	U				
OCDD	PG/G	DIOXINS	1.4	U	0.84	U	1.8	U				
TOTAL HpCDD	PG/G	DIOXINS	0.40	U	0.48	U	0.32	U				
TOTAL HxCDD	PG/G	DIOXINS	0.45	U	0.24	U	0.43	U				
TOTAL PeCDD	PG/G	DIOXINS	0.70	U	0.59	U	0.12	U				
TOTAL TCDD	PG/G	DIOXINS	0.62	U	0.45	U	0.10	U				
2,3,7,8-TCDD	PG/L	DIOXINS							47.6	U	118.0	U
OCDD	PG/L	DIOXINS							14.8		14.2	U
TOTAL HpCDD	PG/L	DIOXINS							8.1	U	70.0	U
TOTAL HxCDD	PG/L	DIOXINS							5.2	U	76.2	U
TOTAL PeCDD	PG/L	DIOXINS							3.2	U	47.3	U
TOTAL TCDD	PG/L	DIOXINS							2.5	U	33.5	U
OCDF	PG/G	FURANS	1.3	U	0.49	U	0.45	U				
TOTAL HpCDF	PG/G	FURANS	0.38	U	0.079	U	0.45	U				
TOTAL HxCDF	PG/G	FURANS	0.18	U	0.12	U	0.23	A				
TOTAL PeCDF	PG/G	FURANS	0.34	U	0.27	U	0.37	U				
TOTAL TCDF	PG/G	FURANS	0.22	U	0.30	U	0.059	U				
OCDF	PG/L	FURANS									23.6	U
TOTAL HpCDF	PG/L	FURANS									27.8	U
TOTAL HxCDF	PG/L	FURANS									19.0	U
TOTAL PeCDF	PG/L	FURANS									16.0	U
TOTAL TCDF	PG/L	FURANS									18.2	U