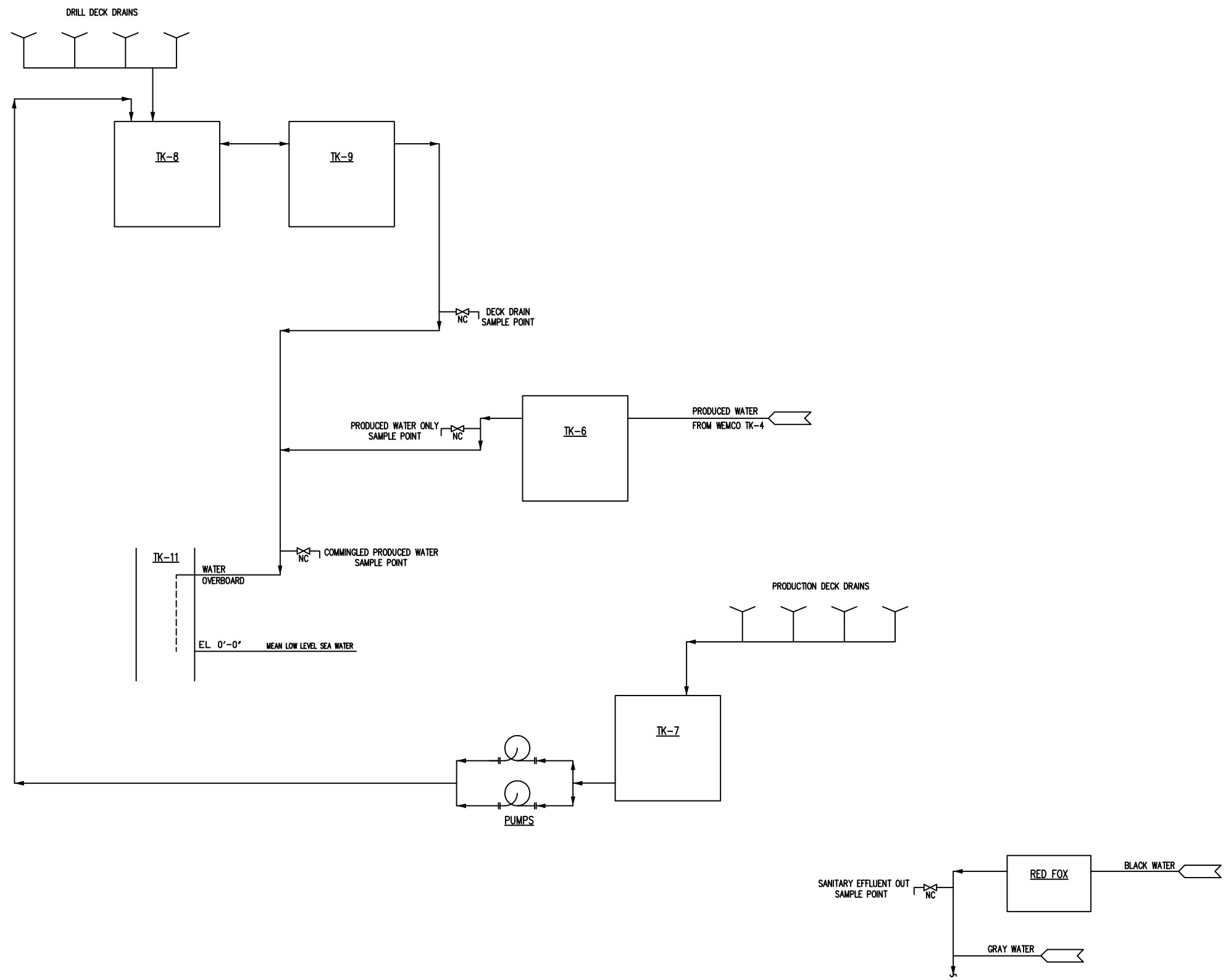

NUMBER	REFERENCE DRAWINGS

VANSON ENGINEERING CO.
ANAHEIM, CALIFORNIA

REV. NO.	DATE	REVISED	REV. BY	CKD. BY	APP'D
0	06/30/20	AS-BUILT	EH	MC	JR

DOS CUADRAS OFFSHORE RESOURCES, L.L.C.

DCOR

DRAWN BY:	EH	DATE:	6/30/20
DESIGN:	MC	DATE:	6/30/20
CHECK:	J.RAO	DATE:	6/30/20
ENGINEER:	EH	DATE:	6/30/20
APPROVED:		DATE:	
APPROVED:		DATE:	
APPROVED:		DATE:	

PROCESS FLOW DIAGRAM
PRODUCED WATER & DECK DRAINS
PLATFORM EDITH
SEAL BEACH, CALIFORNIA

SCALE:	DWG NO:	SHT:	REV. NO.
NONE	DCOR-ED-PP-D-0104		0