Philadelphia Coke

Philadelphia Coke Co., Inc.
4501 Richmond Street
Philadelphia, Pennsylvania 19137
(215) 743-3100

DER-RECEIVED
NORRISTOWN

JUN 27 1983

June 23, 1983

Mr. Gary Bonner
Department of Environmental Resources
1875 Hope Street
Norristown, PA 19401

Dear Mr. Bonner:

Enclosed is a final copy of the Closure Plan prepared for us by Weston. We took somewhat longer to prepare the plan than was our intention but we believe the final result warrants the extra time.

Since you last visited the plant we have not moved any of the materials that we showed you. We have run some additional tests on a pile segregated from the main Trash Pile and it does not look as though this material will have to go to a secure landfill.

We are anxious to complete this project as soon as we can and will be going forward with the necessary paperwork. If you have any questions or comments please call or write to me.

Yours Truly,

James L. Hogeboom
Vice President

WESTON
DESIGNERS CONSULTANTS

DER-RECEIVED
NORRISTOWN
JUN 27 1983

CLOSURE PLAN

PHILADELPHIA COKE COMPANY, INC.
PHILADELPHIA, PENNSYLVANIA

JUNE 1983

Pete Kipin
(412) 787-1411 or
(412) 787-7527

Prepared By:

Roy F. Weston, Inc.
Weston Way
West Chester, Pennsylvania 19380

W.O. No. 0473-03-01

TABLE OF CONTENTS

Section	Title	Page
	LIST OF TABLES AND FIGURES	iii
1	INTRODUCTION	1-1
1.1	Background	1-1
1.2	Scope and Objectives	1-1
1.3	Regulatory Requirements	1-3
2	DESCRIPTION OF FACILITY OPERATIONS	2-1
2.1	Past Operations	2-1
2.3	Plant Shut-Down	2-3
2.3	Security	2-3
3	CLOSURE PLAN	3-1
3.1	Basis of Closure	3-1
3.2	Inventory of Hazardous Wastes	3-1
3.3	Closure Steps	3-1
3.3.1	Tar Tanks	3-4
3.3.2	Waste Liquor Pit	3-4
3.3.3	Trash Pile	3-4
3.3.4	Tar Plains Area	3-5
3.3.5	Tar Decanters	3-6
3.3.6	Iron Oxide Boxes and Pile	3-6
3.3.7	Asbestos Waste	3-6
3.4	Groundwater Monitoring	3-6
3.5	Closure Schedule	3-6
3.6	Closure Certification and Inspection	3-7
3.7	Post-Closure Plan	3-7
4	CLOSURE COST ESTIMATE	4-1

WESTON
DESIGNERS CONSULTANTS

LIST OF TABLES AND FIGURES

Table No.	Title	Page
3-1	Inventory of Solid and Hazardous Waste Storage Areas	3-2
3-2	Proposed Closure Schedule	3-8

Figure No.		
1-1	Location Map	1-2
2-1	Site Map	2-2
3-1	Waste Processing Material Balance	3-3

SECTION 1

INTRODUCTION

1.1 BACKGROUND

Philadelphia Coke Company, Inc. had operated a coke production facility for 53 years from January 1929 to its permanent closing on 12 May 1982. The plant is located on a 63-acre industrial-zoned site in the City of Philadelphia. It is bordered by Richmond, Orthodox, and Buckius Streets and the Delaware River. The site has an elevation of approximately ten feet above mean sea level and is basically flat (see location map, Figure 1-1).

The plant used bituminous coal with some anthracite to produce foundry coke. The principal source of waste materials from the coking operations is the coke gas cleaning system. The hazardous wastes which were generated include decanter tank tar sludge and spent iron oxide. The decanter tank tar sludge from coking operations is a Resource Conservation and Recovery (RCRA) listed hazardous waste (K087), and spent iron oxide has been determined to be potentially hazardous because of its cyanide and phenol content. These wastes were stored on-site during plant operations prior to off-site disposal.

Under the U.S. Environmental Protection Agency's RCRA hazardous waste program, Philadelphia Coke had filed a Part A application for interim status as a storage facility. Pennsylvania's Department of Environmental Resources (DER) inspected the closed coke plant on 4 June 1982, and requested that a Closure Plan be prepared for the hazardous waste management facilities.

Philadelphia Coke Company notified DER on 22 October 1982 that it had contracted to remove and dispose of the remaining decanter tar waste and spent iron oxide which was being stored in the designated hazardous waste storage facilities. These wastes were removed in November and December, and Philadelphia Coke notified DER on 28 December 1982 of the completion of this phase of closure.

Only minor quantities of hazardous waste remain at the site for disposal.

1.2 SCOPE AND OBJECTIVES

A Closure Plan is required for existing hazardous waste management storage facilities under the provisions of the RCRA and the

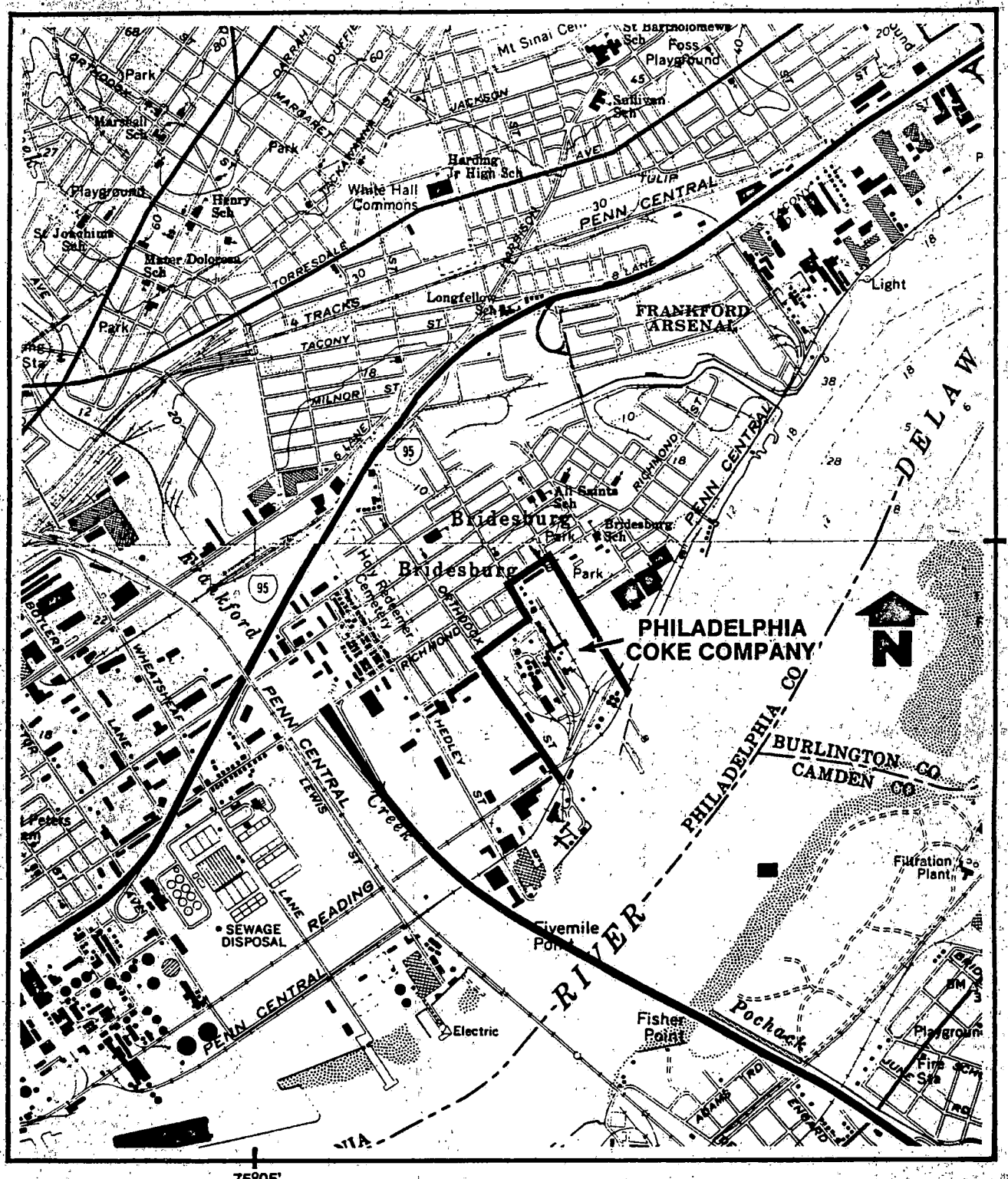

USGS Minute Quadrangles Frank Ford, PA and Camden, NJ

SCALE 1:24000

1 ½ 0 1 MILE

1000 0 1000 2000 3000 4000 5000 6000 7000 FEET

FIGURE 1-1 LOCATION MAP

most-recent Pennsylvania hazardous waste regulations as published on 4 September 1982. The stated purpose of these regulations is to ensure that all hazardous waste facilities are closed in a manner that:

- Minimizes the need for further maintenance.
- Controls, minimizes, or eliminates, to the extent necessary to prevent threat to human health and the environment, post-closure escape of hazardous waste, hazardous waste constituents, leachate, contaminated rainfall, or waste decomposition products to the ground or surface wastes or to the atmosphere (40 CFR 264.111).

Philadelphia Coke has retained Roy F. Weston, Inc. (WESTON) to prepare the Closure Plan for hazardous waste facilities at the closed plant. These plans will discuss the closure work conducted during 1982 and the proposed steps for final closure of remaining areas where potentially-hazardous wastes are still stored on the site.

1.3 REGULATORY REQUIREMENTS

In accordance with regulations promulgated under the RCRA and the Pennsylvania Hazardous Waste Management Regulations, Philadelphia Coke Company has developed this Closure Plan for its hazardous waste storage facility.

The Closure Plan for a hazardous waste storage facility must discuss the following issues:

- The plan must include a description of how and when the facility will be partially and/or finally closed. (Partial closure consists of those parts of the facility which are to be closed because their useful life has been expended.)
- Estimate of the maximum inventory of wastes in storage at any time during the life of the facility (for development of the closure cost estimate).[1]
- Description of steps needed to decontaminate the facility during closure.

[1]Since closure is taking place after the plant operations have been terminated, the waste volume is known.

- Estimate of the expected year of closure and a closure schedule, including itemization of activities which will allow tracking of the progress of closure.

- Notification and submission of a Closure Plan to the Environmental Protection Agency (EPA) Regional Administration at least 180 days prior to initiation of closure or to the appropriate state agency where primacy has been granted.

- Decontamination steps at the end of the closure for all facilities and equipment used during closure.

- Proposed procedures for certification of closure activities by the facility and an independent registered professional engineer.

The Plan discusses the applicable requirements for the specific wastes which were inventoried after the plant was shut down.

SECTION 2

DESCRIPTION OF FACILITY OPERATIONS

2.1 PAST OPERATIONS

During the coking cycle, approximately 25 percent of the coal is volatilized as raw coke oven gas which is drawn off and processed separately. The gas leaving the oven is cooled and passed through a cleaning system to remove residual tar, ammonia, naphthalene, sulfur, and cyanide. The decanter tank tar sludge (RCRA listed waste K087) results from the separation in the tar decanters where the heavy tars and particles of coke and coal accumulate. The spent iron oxide containing free sulfur and some cyanide results from dry box purification.

Under the RCRA permitting program, the plant notified EPA of the storage of decanter tar bottoms and spent iron oxide. On 24 July 1981, Philadelphia Coke received confirmation from EPA Region III as an interim status hazardous waste storage facility (PAD-00-042-7906).

The storage area for the decanter tar waste consisted of three open pits, two of which were concrete-lined and one having an earthen bottom. This area was identified in RCRA Part A as surface impoundment storage (S03) with a capacity of 40,000 gallons. The spent iron oxide was stored on an asphalt pad and oxide boxes. This area was identified as waste pile storage (S04) with a capacity of 2,000 cubic yards. These two areas are shown in Figure 2-1 as decanter tar bottoms (removed) and iron oxide pile and boxes (removed). The wastes stored in these areas have already been hauled to an approved off-site facility, and all decanter equipment and iron oxide boxes have been demolished and salvaged.

Philadelphia Coke Company stored wastes on-site prior to off-site disposal. An inventory taken in 1982 after plant shut-down showed an accumulation of approximately 1,800 cubic yards of decanter tar waste (K087) and 2,800 cubic yards of spent iron oxide which were generated during the operations prior to closure. These two stored wastes were listed on the Part A interim status application. Also, the inspection showed tar remaining in the two storage tanks and an area (tar plains) surrounding the trash pile.

2.2 PLANT SHUT-DOWN

Philadelphia Coke Company permanently discontinued operations at this facility on 12 May 1982. Since that time, the facility has been undergoing demolition which is being scheduled by the remaining two plant personnel. All process-related structures and equipment will be demolished and removed as part of this closure. Miscellaneous buildings (e.g., office, maintenance, material handling, etc.) having potential value to the company will remain.

2.3 SECURITY

The plant site is surrounded by a six-foot fence and is presently using one access gate on Orthodox Street. Gallagher Security Services provides to Philadelphia Coke Company guard services during non-working hours. Security inspections are conducted around the facility at periodic intervals to check the fences and buildings. The fire hydrants on-site are still usable. Security will continue following closure to assist in maintaining site integrity, until such time that final site disposition is determined.

SECTION 3

CLOSURE PLAN

3.1 BASIS OF CLOSURE

The Closure Plan is based on final closure of the areas where hazardous wastes have been stored. All identified hazardous wastes will be removed and disposed of at an approved off-site facility. Areas of visible soil contamination around the hazardous waste storage areas will be excavated, disposed of at an off-site disposal facility, and backfilled with clean fill. The waste removal and site decontamination for closure will be certified for completion by an independent professional engineer.

3.2 INVENTORY OF HAZARDOUS WASTES

Philadelphia Coke Company is in the process of demolishing certain process facilities on the site. The company had contracted with Clean Venture, Inc. to remove and haul the hazardous waste at the tar decanters and spent iron oxide boxes to an approved disposal facility. In November and December of 1982, 4480 tons of the hazardous wastes were hauled to BFI's Solley Road Secure Landfill in Maryland for final disposal.

In proceeding with closure of the plant, Philadelphia Coke has identified other areas where other solid waste is still stored on-site. Table 3-1 presents a listing of these areas, wastes, and the general approach to closing the respective waste storage areas.

3.3 CLOSURE STEPS

The following subsections list the basic steps to close the hazardous waste storage areas. Work will be conducted by an outside contractor experienced with the handling of hazardous wastes, or by other personnel hired and trained by Philadelphia Coke personnel in proper hazardous waste management procedures. This work will be supervised by Philadelphia Coke officials on-site. Waste removal constitutes physical collection and transport to an approved off-site waste disposal or recovery facility. If required, off-site transport will utilize a manifest.

Table 3-1

Inventory of Solid and Hazardous Waste Storage Areas*

Storage Area	Description	Waste	Waste Classification Contaminants	Estimated Quantity	Basic Closure Strategy
. Tar storage tanks	2- steel tanks: 1- 1,000,000 gal 1- 500,000 gal	Decanter tar sludge	K087 - phenol; naphthalene	650 cu yd	• Remove wastes. • Decontaminate and salvage tanks.
. Waste liquor pit	25 ft x 25 ft x 10 ft concrete pit	Ammonia sludges; tar sludge	Phenol; naphthalene; cyanide; ammonia.	275 cu yd	• Remove waste. • Decontaminate and place clean fill in pit.
. Trash pile	Piles of residual materials several feet high over an approximate 50 ft x 250 ft area.	Cleanup tar waste, coal fines, wood, rubble, steel, and other debris	Debris and rubble; generally inert	2,000 cu yd	• Analysis indicates nonhazardous (5/5/83 analytical report). • Segregate nonhazardous debris from tar plains. • Remove wastes.
. Tar plains	A layer several feet thick of tar mixed with coal fines and soil over an approximate 50 ft x 300 ft area.	Decanter tar waste	K087; coal fines and coke, debris and rubble	2,200 cu yd	• Excavate and remove tar. • Segregate nonhazardous debris from hazardous waste. • Backfill excavations. • Cover excavated areas.
. Clean oxide	Uncontaminated, unused iron oxide	---	---	2,000 cu yd	• Blend with acceptable nonhazardous debris for on-site disposal.
. Wood trays	Wood debris	---	---	300 cu yd	• Disposal as fuel off-site.
. Tar decanters	1,800 cu yd of tar decanter waste have been removed; the area has been backfilled.	---	---	---	• Inspect surrounding soils.
. Iron oxide boxes and pile	2,700 cu yd of spent iron oxide have been removed; the area has been covered.	---	---	---	• Inspect surrounding soils.
. Process piping throughout site	Asbestos insulation	Asbestos	Asbestos (not regulated as a hazardous waste)	100-150 cu yd	• Removal by trained contractor. • Dispoal at authorized site.

. Prior to demolition, all process and residual piping were steam-cleaned for an extended period, with all residues collected and disposed. No underground piping was used on the site. Remaining process chemicals, including sulfuric acid, have been sold to other firms.

ee Figure 3-1, Waste Processing Material Balance Flow Sheet.

DATE _____

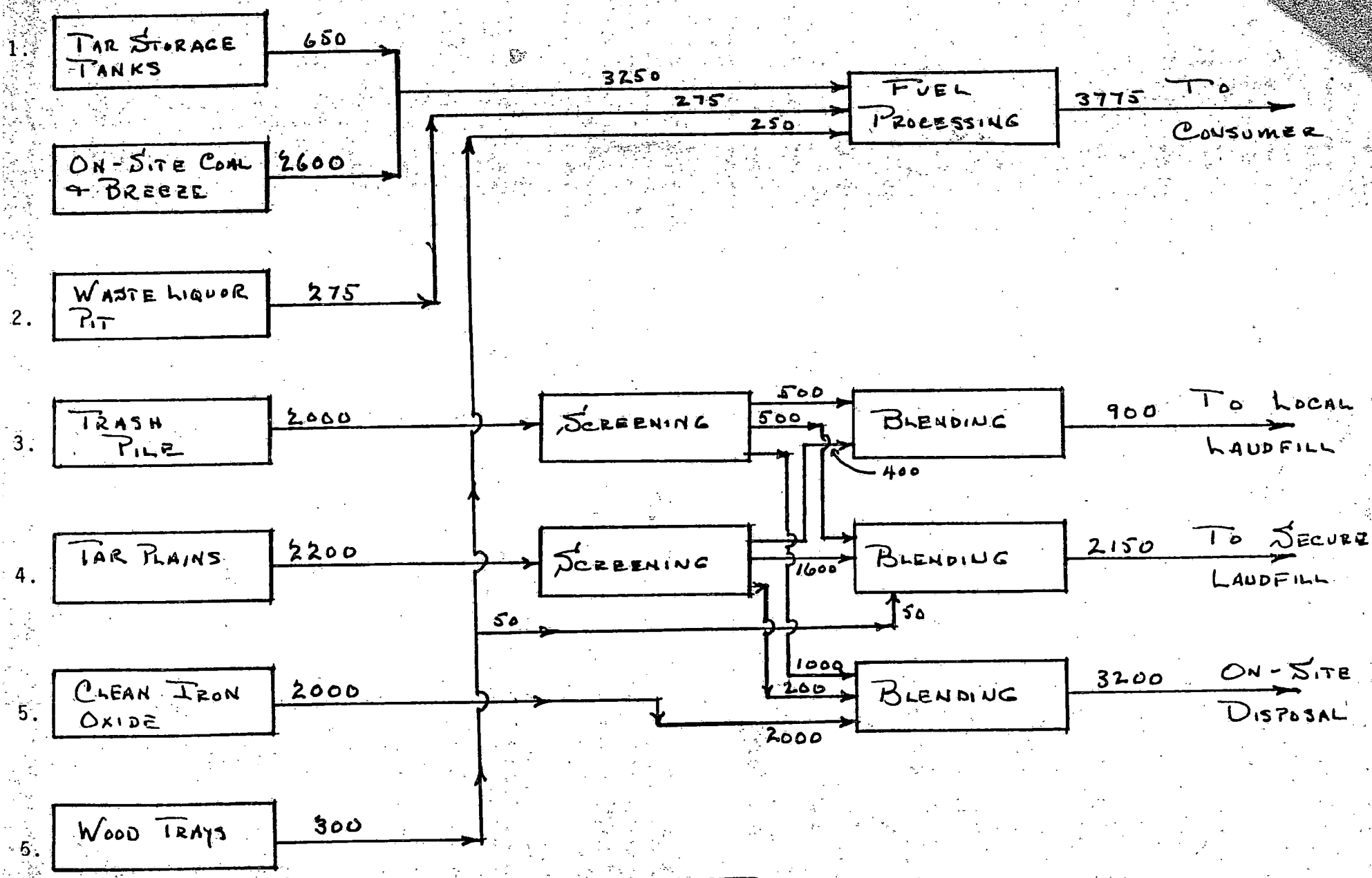

Philadelphia Coke

Philadelphia Coke Co., Inc.
4501 Richmond Street
Philadelphia, Pennsylvania 19137

FIGURE 3-1 WASTE PROCESSING MATERIAL BALANCE

3.3.1 Tar Tanks

Steps to be taken for the tar tanks are:

1. Remove tar from the two tanks.

2. Mix the tar with coal and/or coke breeze for reuse as a fuel source at an approved site (e.g., cement kiln). If a suitable customer cannot be obtained, haul the tar to an approved off-site secure landfill for disposal.

3. Decontaminate the tanks by removing/scraping out any remaining tar residues from the sides and bottom.

4. Remove the decontamination material from the tanks and dispose as per item 2 above.

5. Salvage the tanks.

3.3.2 Waste Liquor Pit

For the waste liquor pit:

1. Vacuum sludge from the pit.

2. Decontaminate the concrete pit by pressure washing with water.

3. Combine sludge with coal fines or coke breeze for reuse as a fuel. Any nonreusable material will be blended with the tar plain material to form a stable material for disposal in the approved manner.

4. Backfill the pit with clean soil.

3.3.3 Trash Pile

For the trash pile:

1. Segregate two classes of waste[1]:

   - Coal fines and breeze. Rubble, debris, wood, metal, plastic, etc., suitable for on-site disposal.

[1]Segregation began in March 1983.

- Nonhazardous debris not suitable for on-site disposal.

2. Dispose of nonhazardous coal fines, breeze, and clean rubble at on-site coal storage lagoon.

3. Haul nonhazardous rubble and other debris unsuitable for on-site disposal to an approved off-site landfill. Recent analyses indicate this material to be nonhazardous.

4. The steps for removal of the potentially-hazardous wastes are the same as the overlapping tar plains and are listed under the following section. Recent analyses indicate this material to be nonhazardous.

3.3.4 Tar Plains Area

For the tar plains area:

1. Remove from the area all uncontaminated debris and rubble. Separated material will be processed parallel with the trash pile.

2. Excavate all visible tar and contaminated soil. The tar has a black sheen and tacky consistency.

3. Blend and stabilize the tar and contaminated soil and remove to an approved off-site landfill.

4. Sample the underlying soil at three locations within the tar plains area. Collect soil samples from the surface, at a depth of 6 inches, and at a depth of 1 foot. Analyze the three soil samples for phenol and naphthalene.

5. Determine the extent of soil beneath the former facility which must be removed to meet the requirements of paragraph 75.265 (s)(8) of the Pennsylvania Hazardous Waste Management Regulations.

6. Excavate the remaining contaminated soil, if required, based on the test results, for off-site disposal at an approved facility.

7. Backfill excavated areas.

3.3.5 Tar Decanters

For the tar decanters:

1. The tar decanter and all waste in the pits have been removed. The area has been backfilled.

2. Inspect the surrounding soil for any visual indication of tar contamination.

3. Excavate the remaining contaminated soil, if required, and dispose off-site.

3.3.6 Iron Oxide Boxes and Pile

For the iron oxide boxes:

1. The oxide boxes and waste pile have already been removed from the location.

2. Inspect the surrounding soil for residual spent iron oxide.

3. Excavate and remove any contaminated soil, if required.

4. Backfill excavated areas.

3.3.7 Asbestos Waste

1. Use contractor experienced with asbestos handling to place asbestos material in bags.

2. Haul all contained asbestos material to an approved off-site landfill.

3.4 GROUNDWATER MONITORING

During closure, all hazardous wastes are to be removed from on-site storage. Since the site does not have any hazardous waste disposal facilities, groundwater monitoring is not required at closure in accordance with the Pennsylvania Hazardous Waste Management Regulations (see Sections 75.265 (s)(8) and 75.265 (n)).

3.5 CLOSURE SCHEDULE

Some closure activities were begun at the site in 1982 as part of facility demolition prior to WESTON's involvement. This plan discusses the previous work completed at the end of 1982 and the

planned future work to complete the closure in 1983. Table 3-2 presents a proposed schedule for final closure of the areas where hazardous wastes are being presently stored.

The actual closure schedule will depend on weather conditions, equipment and materials availability, and regulatory approvals. Closure will be completed when an independent, registered professional engineer certifies that the elements of this plan have been properly executed.

3.6 CLOSURE CERTIFICATION AND INSPECTION

A certification inspection will be performed by an independent registered professional engineer and will be submitted to the EPA Regional Administrator and Pennsylvania DER, indicating that the facility has been decontaminated in accordance with the Closure Plan.

3.7 POST-CLOSURE PLAN

A post-closure plan is not required because this is not a disposal facility, and all wastes are being removed at closure.

Table 3-2

Proposed Closure Schedule[1]

Closure Activity	Proposed Schedule
1. Submit closure plan.	May 1983
2. Receive approval from DER.	June 1983
3. Remove wastes.	June to September 1983
4. Remove contaminated soils and decontamination residues.	September to October 1983
5. Backfill and cover excavated areas.	October to December 1983
6. Inspect and certify closure.	December 1983

[1]Contingent upon DER approval of Closure Plan within 30 days of receipt and favorable weather conditions during earthmoving activities.

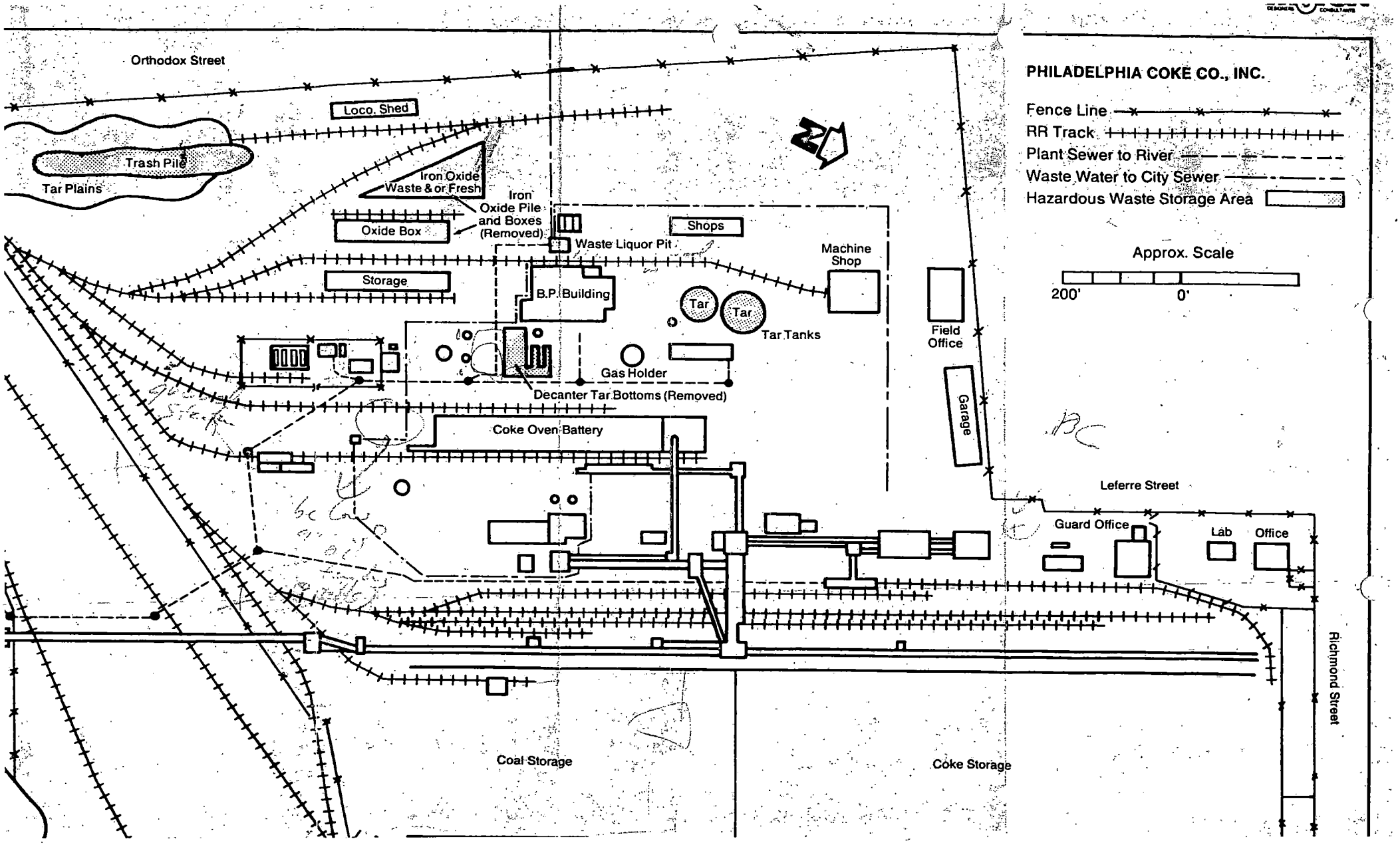
PHILADELPHIA COKE CO., INC.
Fence Line
RR Track
Plant Sewer to River
Waste Water to City Sewer
Hazardous Waste Storage Area
Approx. Scale
200'
0'
Orthodox Street
Loco. Shed
Trash Pile
Tar Plains
Iron Oxide Waste & or Fresh
Iron Oxide Pile and Boxes (Removed)
Oxide Box
Shops
Waste Liquor Pit
Machine Shop
Storage
B.P. Building
Tar
Tar
Tar Tanks
Field Office
Gas Holder
Decanter Tar Bottoms (Removed)
Garage
Coke Oven Battery
Leferre Street
Guard Office
Lab
Office
Richmond Street
Coal Storage
Coke Storage