CLIENT	JOB NUMBER
SUN OIL	RC-0086
SUBJECT: CONCRETE TRENCH DESIGN	
BASED ON: ACI 350-89 ALTERNATE DESIGN METHOD	DRAWING NUMBER
BY: M DYE / J. Schmohl — CHECKED BY: R DUNCAN	APPROVED BY — DATE: 10/22/97

CALCULATE P_n (EQ 13.14.6, P 431, WANG & SALMON)

$m = 17.65$

$\rho = A_s/bd = 3.12/[(12)(26.3)] = 0.0099$

$\rho' = A_s'/bd = 0.44/[(12)(26.3)] = 0.0014$

$e' = e + d'' = 70.4'' + 10.03'' = 80.43$

$P_n = 76.6^k$ (SEE NOTE BOTTOM P. 31)

$0.10 f'_c A_g = 0.10(4)(30)(12) = 144^k$

$\phi = 0.70 + [(144 - 54.4)/144](0.20) = 0.82$

$\phi P_n = 62.8^k$ $\phi P_n > P_u$ $62.8^k > 54.4^k$ (OK)

$P_n e = M_n$

$M_n = 76.6^k (70.4'')(1'/12in) = 449.4 \text{ ft}\cdot k$

$\phi M_n \geq M_u$ $0.82(449.4 \text{ ft}\cdot k) = 368.5'^k > 319.3'^k$ Applied (OK)

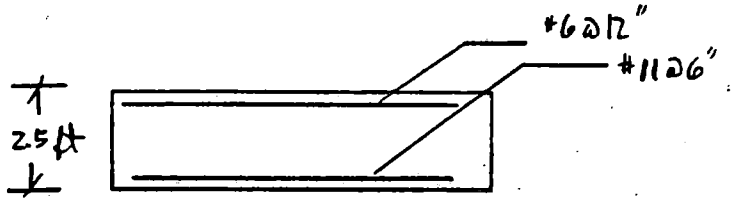

CLIENT Sun Oil	JOB NUMBER RC-0086		
SUBJECT Concrete Trench Design			
BASED ON	DRAWING NUMBER		
BY J. Schmohl	CHECKED BY R DUNCAN	APPROVED BY	DATE 12/2/92

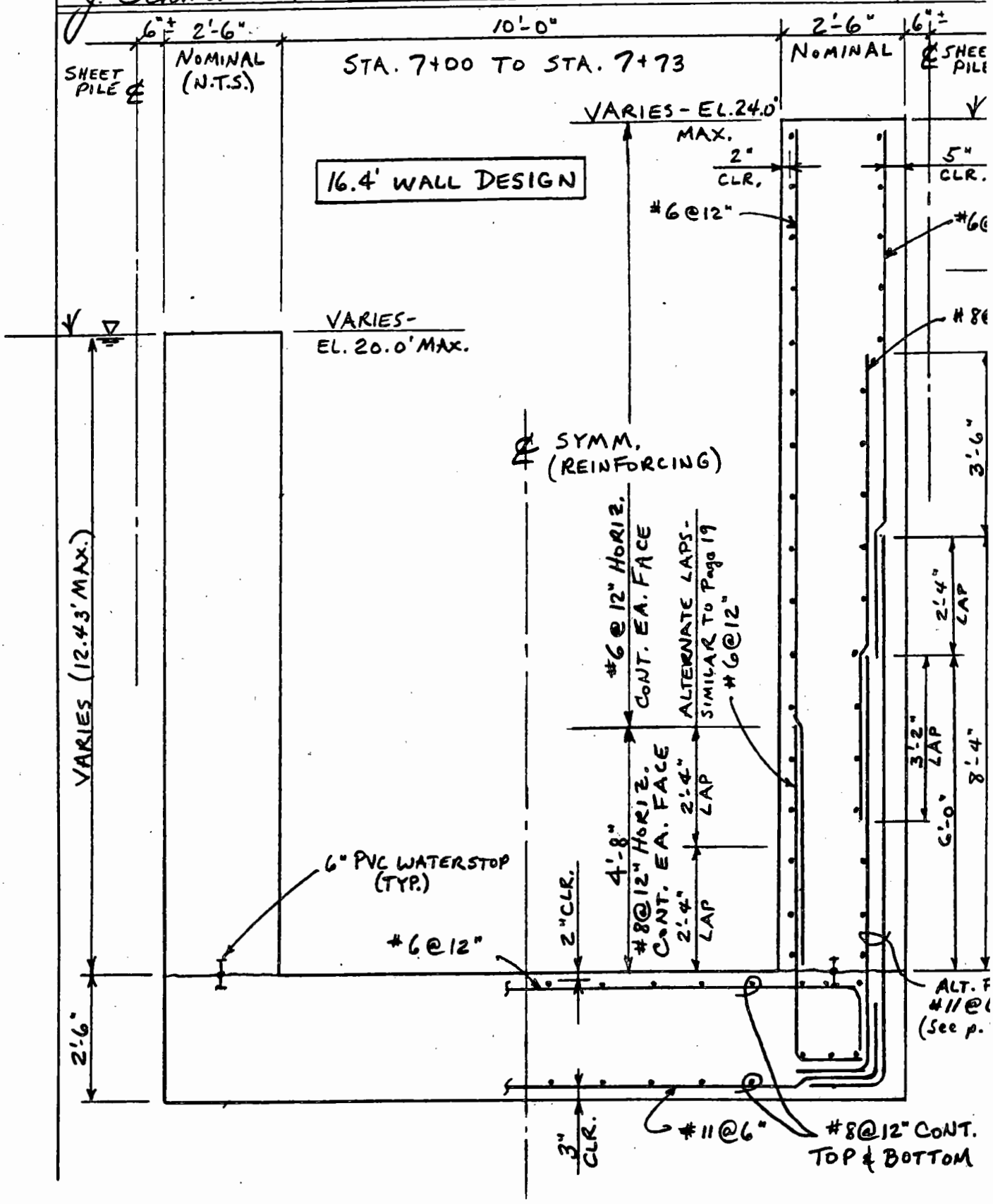

CLIENT Sun Oil		JOB NUMBER RC-0086	
SUBJECT Concrete Trench Design			
BASED ON		DRAWING NUMBER	
BY J. Schmohl	CHECKED BY R DUNCAN	APPROVED BY	DATE 11/30/92

Discussion - Design Wall Heights vs. Stations Along Trench

Preliminary design: wall heights were based on a sketch of top of wall elevations obtained from the civil group and top of slab elevations were set at 2.00' below PWW pipe inverts given on the conveyance system profile drawing (these sketches and dwgs. are included in the Appendix).

During the checking of the 13.2' wall design (with sloping backfi it was determined that sloping backfill and existing ground elevations along the proposed trench alignment would require adjustments in the design wall heights relative to stationing along the trench.

For final design, civil plan/profile dwgs 14007A, 14008A, 14009 14031A, 14032A & 14033A were studied in conjunction with civil conveyance cross section dwgs. 14011A thru 14018A and 14035A thru 14041A. Design wall heights were determined independently for both sides of the trench based on existing ground elevations and proposed grading modifications at the trench (as shown on the conveyance cross section dwgs).

After design wall heights were determined independently for both sides of the trench, composite trench cross sections were considered where the active/at-rest forces on one side of the trench (high side) were resisted primarily by developing passive pressure on the wall of the opposite side of the trench. The higher pressures on the wall (from passive pressure) generally required a wall strength for the lower wall comparable to the strength of the higher wall (except fo Sta 2+50 to 4+00).

The effect of railroad surcharges on the trench walls will be determined prior to discipline check of the conveyance system.

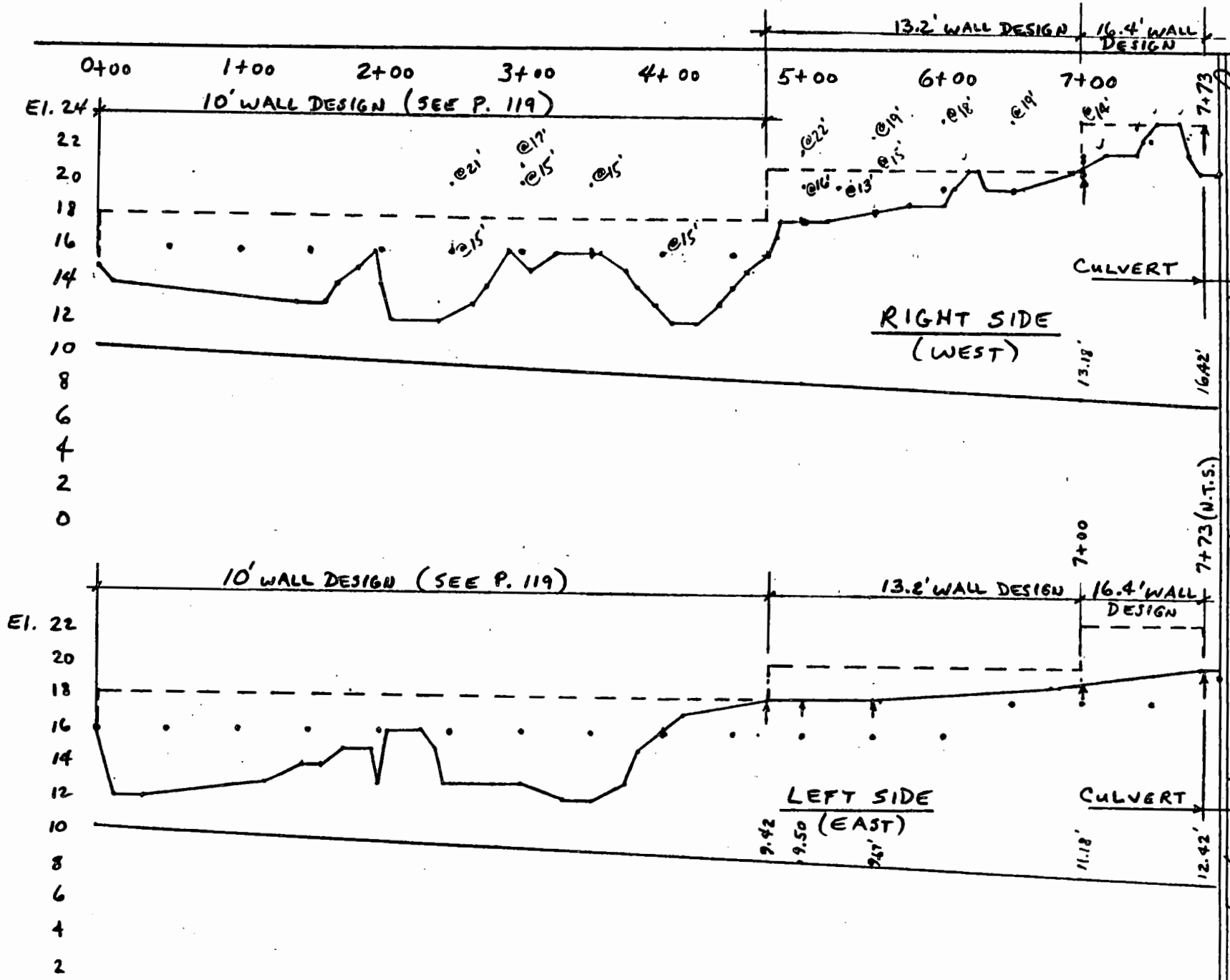

CLIENT	Sun Oil
SUBJECT	Concrete Trench Design
BASED ON	Plan/Profile Drawings
BY	J. Schmehl
CHECKED BY	R. Duncan
APPROVED BY	
DATE	12/2/92
DRAWING NUMBER	
JOB NUMBER	RC-0086

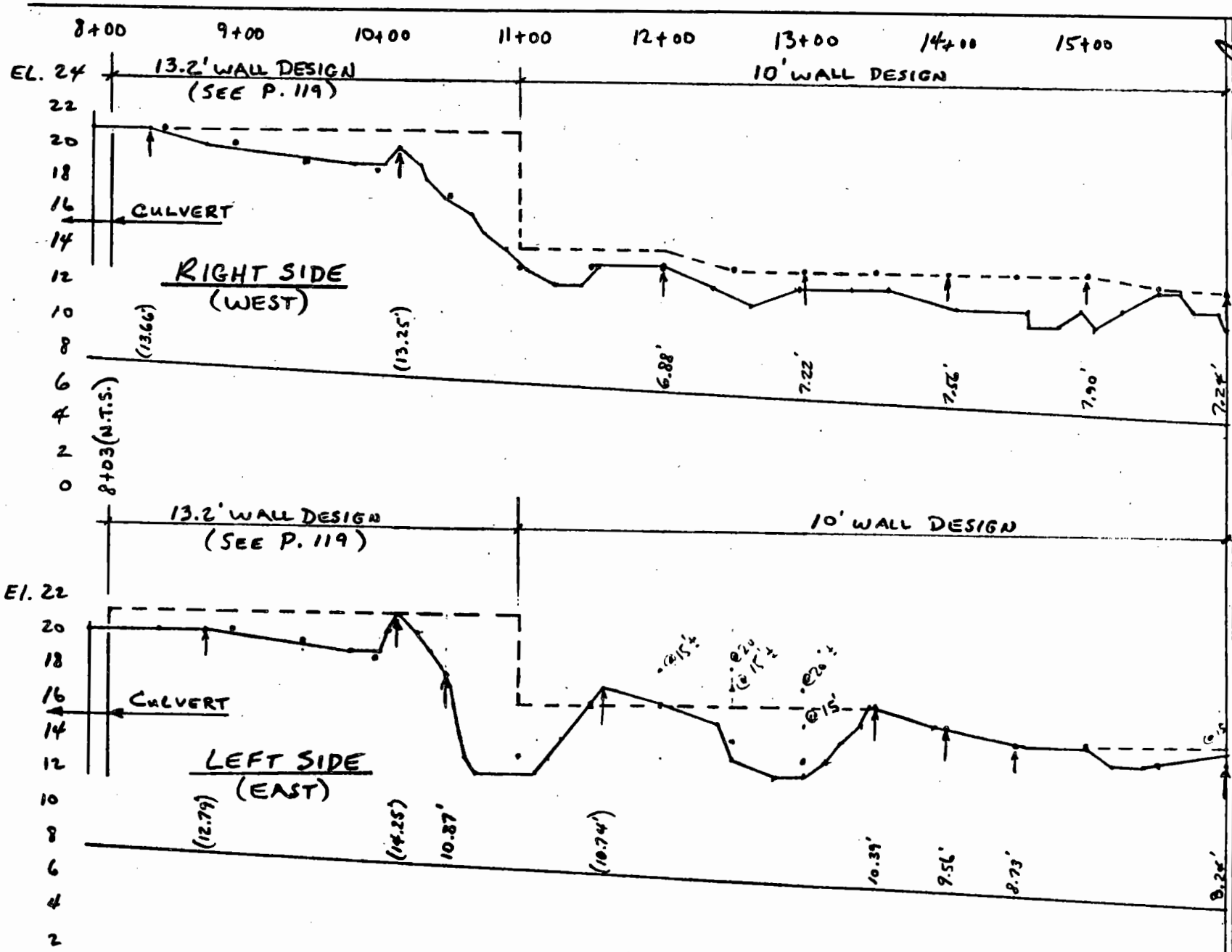

CLIENT	Sun Oil
SUBJECT	Concrete Trench Design
BASED ON	
BY	D. Schmoll
CHECKED BY	R. Duncan
APPROVED BY	
JOB NUMBER	RC-0086
DRAWING NUMBER	
DATE	12/-2/92

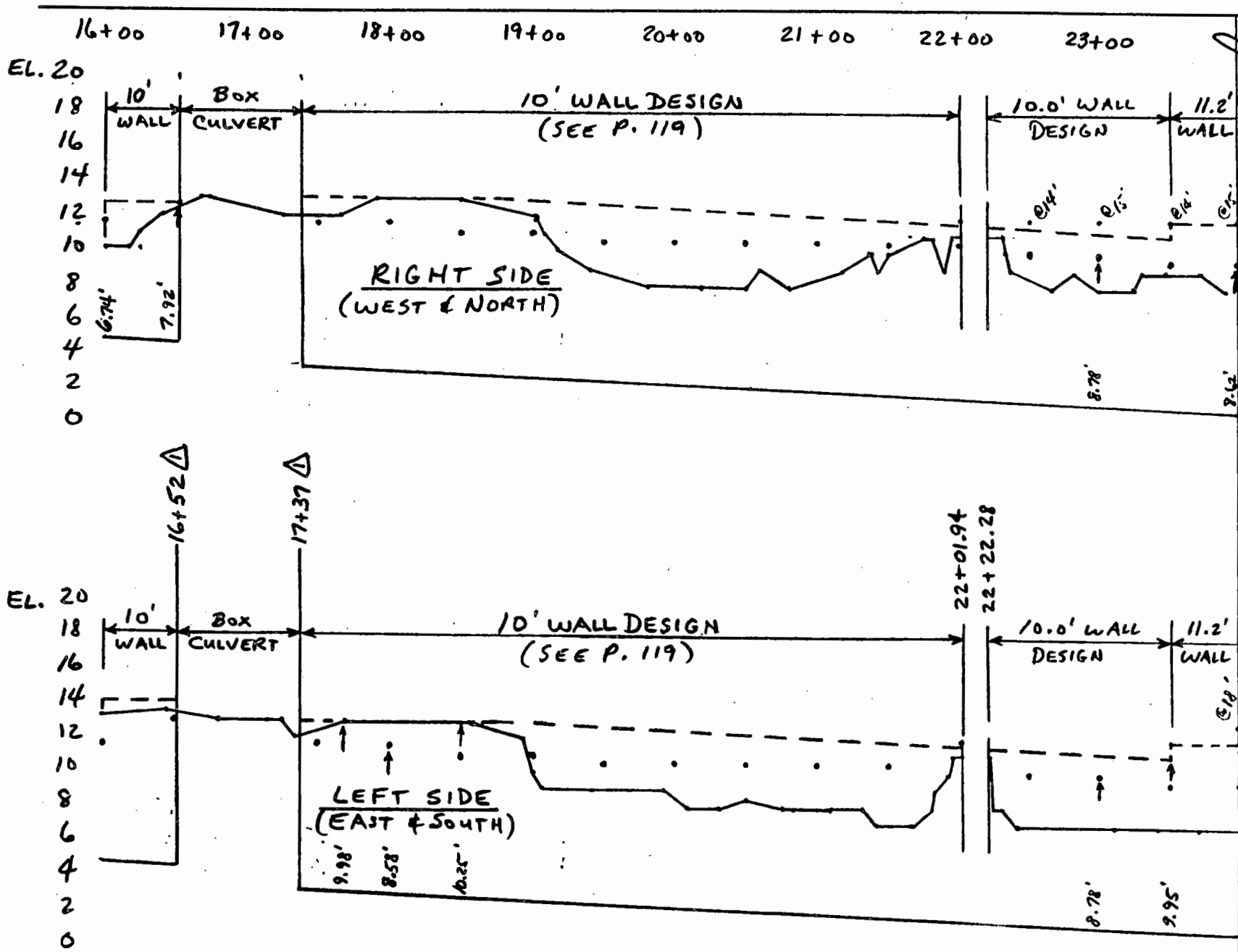

CLIENT Sun Oil			JOB NUMBER RC-0086
SUBJECT Concrete Trench Design			
BASED ON			DRAWING NUMBER
BY J. Schmoll	CHECKED BY R. Duncan	APPROVED BY	DATE 12/2/92 REV

CLIENT	JOB NUMBER
Sun Oil	RC-0086
SUBJECT: Concrete Trench Design	
BASED ON	DRAWING NUMBER
BY: J. Schmohl / CHECKED BY: R DUNCAN	APPROVED BY / DATE: 12/ 2/92

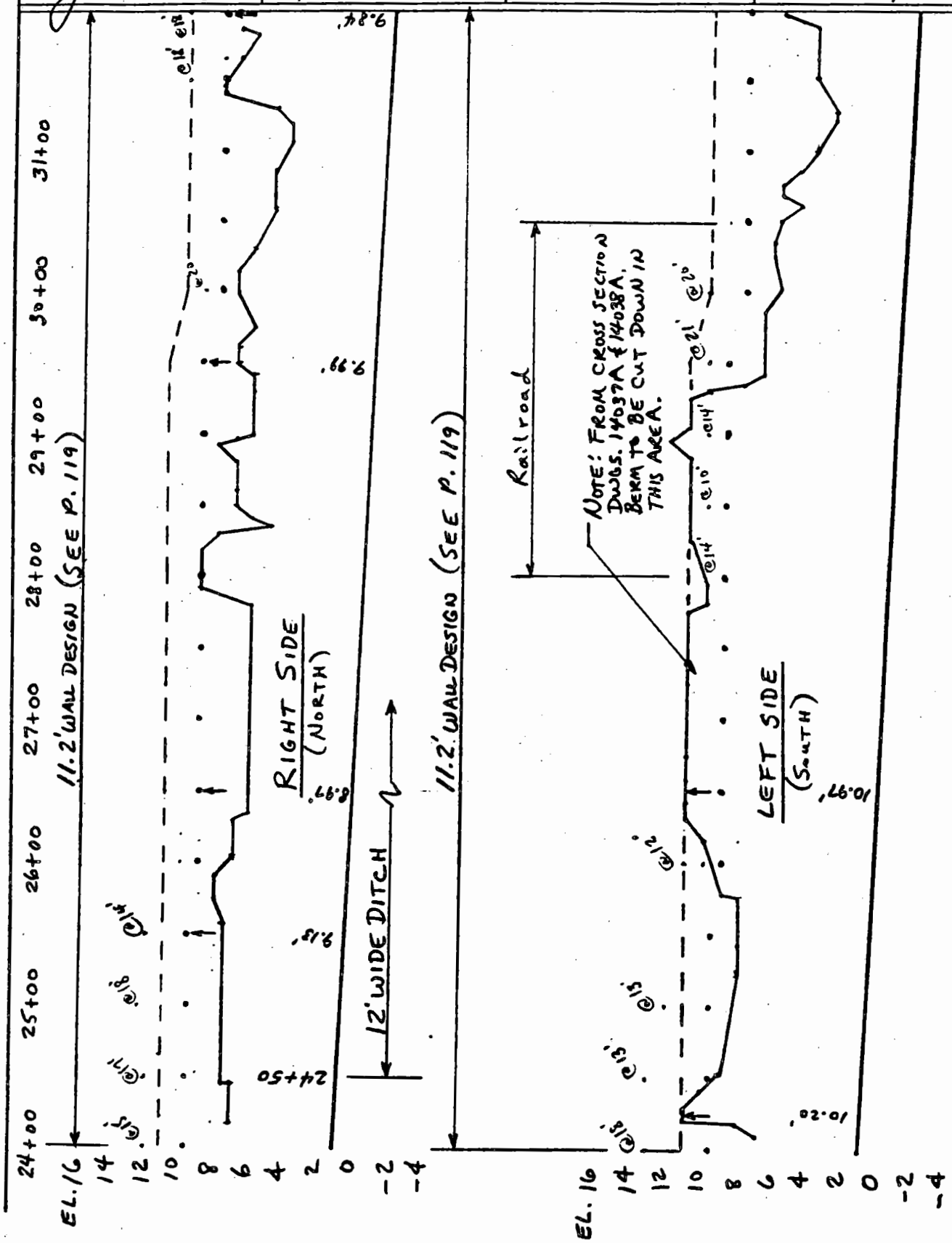

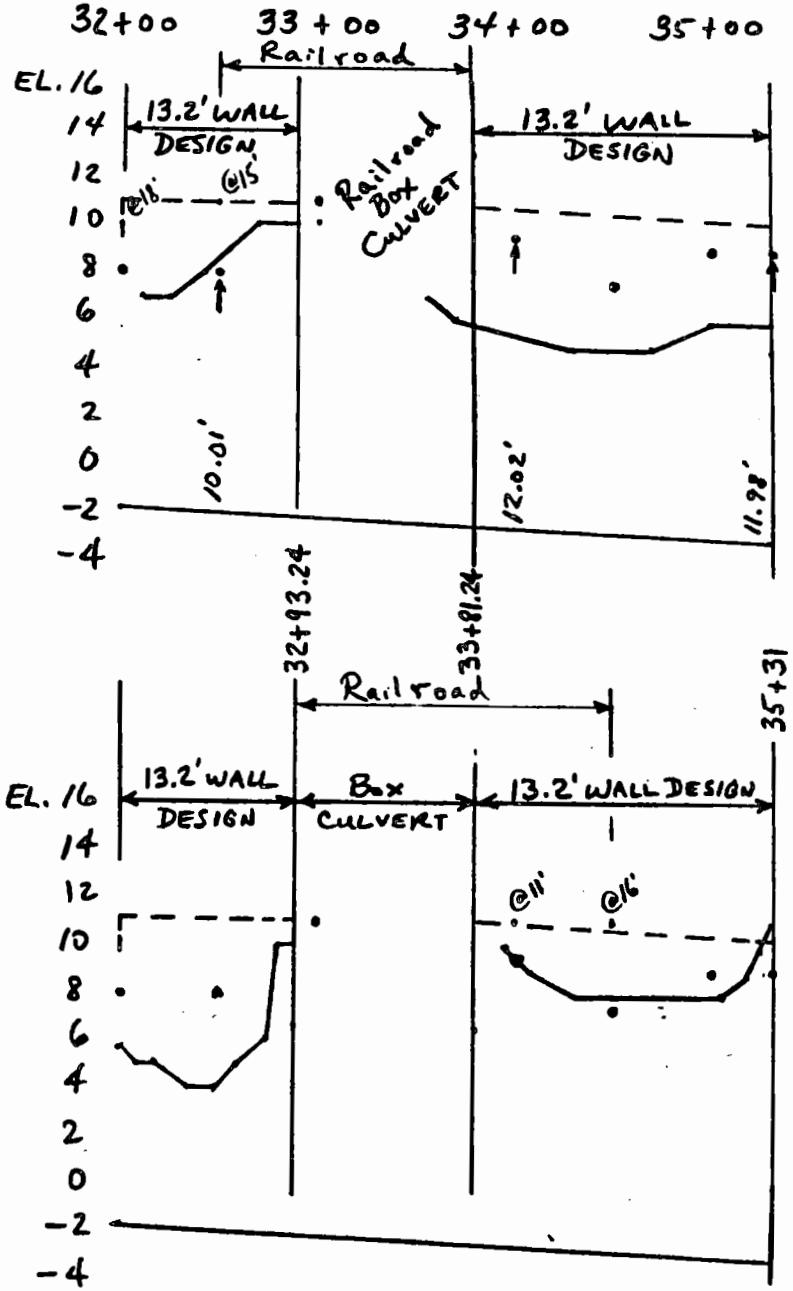

RIGHT SIDE
(NORTH)

LEFT SIDE
(SOUTH)

CLIENT	Sun Oil
SUBJECT	Concrete Trench Design
BASED ON	
BY	J. Schmoll
CHECKED BY	TR Duncan
APPROVED BY	
DATE	12/2/92
JOB NUMBER	RC-008
DRAWING NUMBER	

CLIENT Sun Oil		JOB NUMBER RC-0086	
SUBJECT Concrete Trench Design			
BASED ON		DRAWING NUMBER	
BY J. Schmohl	CHECKED BY R DUNCAN	APPROVED BY	DATE 11/16/92

Check 13.2' Wall Design from Sta. 8+03± to Sta. 10+50 (Both sides of Trench)

Note: In this case, the "backfill" behind the wall is level, whereas the 13.2' wall was designed with backfill sloping +21° up from the wall. This wall is actually higher, with a theoretical height of 14.37' max. if the top of wall elevation is El. 21.0'. The actual soil height from plan/profile sheets is 14.25' (maximum) above the slab

For Sloping Backfill, Max. Shear & Moment on the wall (See p. 67) for the 13.2' Wall Design is:

V_{max} @ $H=13.2'$ $= 16.73^K$

$M_{max.}$ @ $H=13.2'$ $= 89.26$ ft-k

Using the equations developed on page 11 for the 11.2' wall with water saturated level "backfill" and assuming 14.37' wall height:

$$V_s = 0.0507H^2 + 0.332H = 0.0507(14.37')^2 + 0.332(14.37')$$
$$= 10.47^K + 4.77^K = 15.24^K < 16.73^K \text{ OK}$$

$$M_s = 0.0169H^3 + 0.166H^2 = 0.0169(14.37')^3 + 0.166(14.37')^2$$
$$= 50.15'^K + 34.28'^K = 84.43'^K < 89.26'^K$$

So the same wall/reinforcing will be used for the slightly higher wall with level backfill.

CLIENT Sun Oil		JOB NUMBER RC-0086	
SUBJECT Concrete Trench Design			
BASED ON		DRAWING NUMBER	
BY J. Schmohl	CHECKED BY R DUNCAN	APPROVED BY	DATE 11/17/92

Check 11.2' Wall Design for 10.67' High Wall with Sloping Backfill @ Sta. 5+50 : (West Side of Trench)

Note: In this case, there is sloping "backfill" behind the wall, whereas the 11.2' wall was designed for water saturated level "backfill"

Max. Shear & Moments on the wall for the 11.2' wall Design with level saturated "backfill" (See p. 11)

$V_{max.@H=11.2'} = 10.08^K$

$M_{max.@H=11.2'} = 44.6'^K$

Using the equations developed on page 67 for the 13.2' high wall with sloping backfill and assuming 10.67' max. wall height:

$V_s = 0.0553\,H^2 + 0.5377\,H = 0.0553(10.67')^2 + 0.5377(10.67')$

$= 6.30^K + 5.74^K = 12.04^K > 10.08^K$

No Good

$M_s = 0.01843\,H^3 + 0.269\,H^2 = 0.01843(10.67')^3 + 0.269(10.67')^2$

$= 22.39'^K + 30.63'^K = 53.02'^K > 44.6'$

No Good

Conclusion: Use 13.2' WALL DESIGN @ Sta. 5+50

Try 11.2' wall @ Sta. 5+00 w/ Top of wall EL. 18.0' (H=9.50')

$V_s = 0.0553(9.50')^2 + 0.5377(9.50') = 4.99^K + 5.11^K = 10.10^K \sim 10.$

Say OK

$M_s = 0.01843(9.50')^3 + 0.269(9.50')^2 = 15.80'^K + 24.28'^K = 40.08'^K < 4$

OK

Transition to 11.2' Wall Design @ Sta. 5+00

CLIENT Sun Oil		JOB NUMBER RC-0086	
SUBJECT Concrete Trench Design			
BASED ON		DRAWING NUMBER	
BY J. Schmohl	CHECKED BY R DUNCAN	APPROVED BY	DATE 11/17/92

Check 10' WALL DESIGN FOR 6.99' High Wall with Sloping Backfill @ Sta. 3+50 (Similar @ Sta. 3+00) on West Side of Trench:

Note: In this case, there is sloping "backfill" behind the wall whereas the 10' WALL was designed for water saturated level "backf

Max shear and moments on the wall for the 10' wall design with level saturated backfill (see p. 11 & 36)

$$V_{max.} @ H = 10.0' = 0.0507 H^2 + 0.332 H = 0.0507(10.0')^2 + 0.332(10.$$
$$= 5.07^k + 3.32^k = 8.39^k$$

$$M_{max.} @ H = 10.0' = 0.0169 H^3 + 0.166 H^2 = 0.0169(10.0')^3 + 0.166(10.0'$$
$$= 16.9^{'k} + 16.6^{'k} = 33.5^{'k}$$

Using the equations developed on page 67 for the 13.2' high wa with sloping backfill and assuming 6.99' max. wall height:

$$V_s = 0.0553 H^2 + 0.5377 H = 0.0553(6.99')^2 + 0.5377(6.99')$$
$$= 2.70^k + 3.76^k = 6.46^k < 8.39^k \text{ OK}$$

$$M_s = 0.01843 H^3 + 0.269 H^2 = 0.01843(6.99')^3 + 0.269(6.99')^2$$
$$= 6.29^{'k} + 13.14^{'k} = 19.43^{'k} < 33.5^{'k}$$

Use 10' WALL DESIGN FROM STA. 2+50 TO STA 4+00 ON WEST SIDE OF TRENCH.

CLIENT Sun Oil		JOB NUMBER RC-0086	
SUBJECT Concrete Trench Design			
BASED ON		DRAWING NUMBER	
BY J. Schmohl	CHECKED BY R DUNCAN	APPROVED BY	DATE 11/20/92

Check 10' Wall Design from Sta. 11+00 to Sta. 12+50 (East Side of Trench)

Note: In this case, dwgs. 14015A & 14016A show the bank cut back @ $\beta \approx 21°$

For Sta. 12+50 $H_{wall} = 7.05'$

$$V_s = 0.0553\,H^2 + 0.5377\,H = 0.0553(7.05)^2 + 0.5377(7.05)$$
$$= 2.75^k + 3.79 = 6.54^k < 10.08 \text{ Design}$$

$$M_s = 0.01843\,H^3 + 0.269\,H^2 = 6.46'^k + 13.37 = 19.83'^k < 33.5 \text{ Design Allowable for 10' WALL}$$

Use 10' WALL FROM Sta 11+00 to 12+50, Based on cut down fill to El. 13.0'

CLIENT Sun Oil		JOB NUMBER RC-0086	
SUBJECT Concrete Trench Design			
BASED ON		DRAWING NUMBER	
BY J. Schmohl	CHECKED BY R DUNCAN	APPROVED BY	DATE 11/24/92

Check @ Sta. 24+50 - Left Side of Trench

This appears to be worst case for walls from Sta. 23+50 thru Sta. 26+50. From cross section on dwg. 14036A, the sloping backfill angle is about 30° for top of wall @ EL. 9.50'. Since the shear & moment equations on page 67 were based on $\beta = 21°$, assume top of wall @ EL. 10.75' @ Sta 24+50, which would then give $\beta = 21°$. This approach is conservative.

Using wall height of 10.75' - 0.71' (top of slab) = 10.04' say 10' high wa w/ 21° backfill.

$V_{max} = 0.0553 H^2 + 0.5377H = 5.53 + 5.38 = 10.91^K$ vs. 10.08^K 8% High

$M_{max} = 0.01843 H^3 + 0.269 H^2 = 18.43 + 26.9 = 45.33'^K$ vs. $44.6'^K$ 2% High

Since the above approach was conservative (ie, 10' wall height), the 11.2' wall design should be satisfactory for Sta. 24+50.

Compare results of Sta. 25+50 (Right Side of Wall) w/ $H = 9.13'$ & $\beta = 20°$ (use 21°)

$V_{max} = 0.0553(9.13')^2 + 0.5377(9.13') = 4.61 + 4.91 = 9.52^K < 10.0$ OK

$M_{max} = 0.01843(9.13')^3 + 0.269(9.13')^2 = 14.03 + 22.42 = 36.45'^K <$ OK

Use 11.2' WALL DESIGN FROM Sta. 23+50 to Sta. 26+50

CLIENT Sun Oil		JOB NUMBER RC-0086	
SUBJECT Concrete Trench Design			
BASED ON		DRAWING NUMBER	
BY J. Schmohl	CHECKED BY R DUNCAN	APPROVED BY	DATE 11/19/92

Check @ Sta. 5+50

13.2' Wall on West Side vs. ~~70.0'~~ 11.2' Wall on East Side

Slab Axial Load from 13.2' wall @ Sta. 5+50 (10.67' High Wall w/ Sloping Backf
H = 12.92'

$P_{s_{10.67S}} = 0.0553 H^2 + 0.5377 H = 16.18^k$ (Ref. p. 67)

Slab Axial Load from East side wall @ Sta. 5+50 (9.67' High Wall w/ Level Backfill
H = 11.92'

$P_{s_{9.67L}} = 0.0507 H^2 + 0.332 H = 11.16^k$ (Ref. p. 11)

Assume the difference in slab axial loads will be taken by developing passive earth pressure against the East Trench wall

$P_{s_{10.67S}} - P_{s_{9.67L}} = 16.18^k - 11.16^k = 5.02^k$ Unbalanced Load per foot of wall

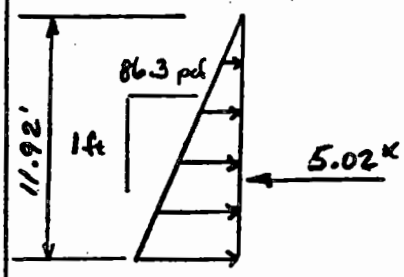

$R_{p_{max}} = 86.3\,pcf\,(11.92)\left(\frac{11.92'}{2}\right)(1ft) = 6.13^k > 5.02$ OK

9.67
2.25
11.92

Add'l Moment @ Base of 9.67' wall due to passive pressure

$M_p = .0863(9.67')^3(1ft)/6 = 13.01\ ^{'k}$

$M_s = 0.0169(9.67)^3 + 0.166(9.67)^2 = 30.80$

$43.81\ ^{'k} > 33.5\ ^{'k}$ for 10' wall Design - No Good!

SHEAR: $V_p = 0.0863(9.67')^2/2 = 4.03^k$

$V_s = 7.95^k$

$11.98^k > 10.08^k$ for 11.2' wall Design - Use 13.2' wall DESIGN

$< 44.6^k$ for 11.2' wall

CLIENT Sun Oil		JOB NUMBER RC-0086	
SUBJECT Concrete Trench Design			
BASED ON		DRAWING NUMBER	
BY J. Schmohl	CHECKED BY R DUNCAN	APPROVED BY	DATE 11/20/92

Check @ Sta. 13+50

10.39' Fill on East Side vs. 7.39' Fill on West Side

Slab axial load from 10.39' fill with 2.25' slab ($H = 12.64'$)

$$P_{S_{10.39L}} = 0.0507H^2 + 0.332H = 12.30^K \qquad \text{(Ref. p. 11)}$$

Slab axial load from 7.39' fill w/ 2.25' slab ($H = 9.64^K$)

$$P_{S_{7.39L}} = 0.0507H^2 + 0.332H = 7.91^K$$

Assume the difference in slab axial loads will be taken by developing passive earth pressure against the west trench wall:

$$P_{S_{10.39L}} - P_{S_{7.39L}} = 12.30^K - 7.91^K = 4.39^K \text{ Unbalanced Load/ft. of wa}$$

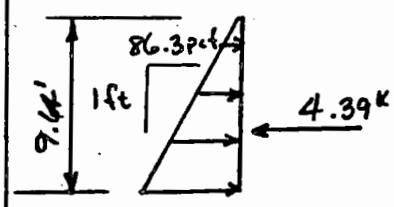

$$R_{P_{max.}} = 0.0863\,\text{Kcf}\,(9.64')\left(\frac{9.64'}{2}\right)(1\text{ft}) = 4.01^K < 4.39$$

Close Enough?
See Below

Assume the bank on east side is cut back at Sta. 13+50 as shown on dwg. 140 ($\beta = 21° \pm$) $H = 9.64'$

$$P_{S_{7.39S}} = 0.0553H^2 + 0.5377H = 5.14^K + 5.18^K = 10.32^K \text{ (See p.6}$$

Difference

$$P_{S_{7.39S}} - P_{S_{7.39L}} = 10.32^K - 7.91^K = 2.41^K < 4.01^K \text{ (See } R_{P_{max}} \text{ ab}$$

OK

Add'l Moment Due to Passive Pressure on Wall

$$M_P = 0.0863(7.39')^3(1\text{ft})/6 = 5.80^{'K} \quad 3.44$$

$$M_S = 0.0169(7.39)^3 + 0.166(7.39')^2 = 15.89 \quad 19.37$$

$$21.69^{'K} > 19.3^{'K} \text{ for 8' WALL DESIGN}$$

NO GOOD!

Add'l Shear

$$V_P = 0.0863(7.39')^2/2 = 2.36^K \quad 1.42$$

$$V_S = 0.0507H^2 + 0.332H = 5.22 \quad 8.66 \quad 10.08^K \text{ OK}$$

$$7.58^K > \cancel{5.90}^K \text{ for 8' WALL DESIGN}$$

∴ USE 10' WALL DESIGN.

(Say this applies from Sta. 12+50 to 13+50)

CLIENT Sun Oil		JOB NUMBER RC-0086	
SUBJECT Concrete Trench Design			
BASED ON		DRAWING NUMBER	
BY J. Schmohl	CHECKED BY TR DUNCAN	APPROVED BY	DATE 11/20/92

Check @ Sta. 14+00

9.56' Fill on East side vs. 7.56' Fill on West Side

Slab axial load ($H = 9.56' + 2.25' = 11.81'$)

$P_{S\,9.56L} = 0.0507\,H^2 + 0.332\,H = 7.07^k + 3.92 = 10.99^k$

Slab axial load ($H = 7.56 + 2.25 = 9.81'$)

$P_{S\,7.56L} = 4.88^k + 3.26 = 8.14^k$

Difference $= 10.99^k - 8.14 = 2.85^k$

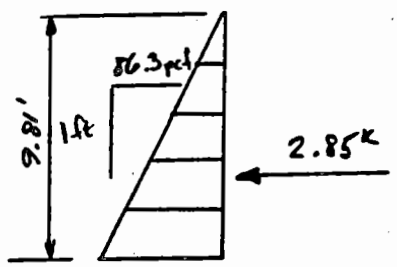

$R_{p\,max} = 0.0863\,Kcf\,(9.81')\left(\frac{9.81'}{2}\right)(1ft) = 4.15^k > 2.8$ OK

Add'l Moment due to Passive Pressure on Wall

$M_p = 0.0863(7.56')^3/6 = 6.21^k$ 4.26

$M_s = 0.0169(7.56)^3 + 0.166(7.56)^2 = 16.79$ 21.05

$23.00'^k > 19.3'^k$ for 8' wall design - No Good!

Add'l Shear:

$V_p = 0.0863(7.56')^2/2 = 2.47^k$ 1.70

$V_s = 5.41$ 7.11 10.08^k OK

$7.88^k > \cancel{5.90^k}$ for 8' WALL DESIGN

USE 10' WALL DESIGN

(Say this applies @ Sta. 4+50 & 14+00)

CLIENT	Sun Oil	JOB NUMBER	RC-0086
SUBJECT	Concrete Trench Design		
BASED ON		DRAWING NUMBER	
BY J. Schmohl	CHECKED BY R DUNCAN	APPROVED BY	DATE 11/20/92

Check @ Sta. 16+52

8.92' Fill on East Side vs. 7.92' Fill on West Side

Slab axial load ($H = 8.92' + 2.25' = 11.17'$) vs. 10.05ᵏ for 11.2'ᵏ (OK)

$P_{s\,8.92L} = 0.0507\,H^2 + 0.332\,H = 10.03^k$

Slab axial load ($H = 10.17'$)

$P_{s\,7.92L} = 8.62^k$

Difference $= 10.03^k - 8.62 = 1.41^k$

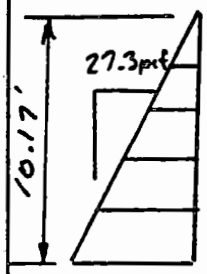

$R_{p\,max} = 0.0863\,(10.17')^2/2 = 4.46^k$

Assume Actual Passive Developed $= \frac{1.41^k}{4.46^k}(86.3\,pcf) = 27.$

1.41^k

Add'l Moment due to 27.3 pcf developed passive pressure on wall

$M_p = 0.0273\,(7.92')^3/6 = 2.26'^k$

$M_s = 0.0169\,(7.92)^3 + 0.166\,(7.92)^2 = 18.81$

$21.07'^k > 19.3'^k$ for 8' wa

DESIGN - USE 10' w

DESIG

(Say this applies from 14+50 to 16+50)

CLIENT Sun Oil		JOB NUMBER RC-0086	
SUBJECT Concrete Trench Design			
BASED ON		DRAWING NUMBER	
BY J. Schmohl	CHECKED BY R DUNCAN	APPROVED BY	DATE 11/20/92

Check @ Sta. 3+50

6.99' Sloped Backfill (27°) on West side vs. 6.99' Level Fill East

Slab Axial Load ($H = 6.99' + 2.25' = 9.24'$)

$P_{s\,6.99S} = 0.0553\,H^2 + 0.5377\,H = 9.69^k$

$P_{s\,6.99L} = 0.0507\,H^2 + 0.332\,H = 7.40^k$

Difference $= 9.69^k - 7.40^k = 2.29^k$

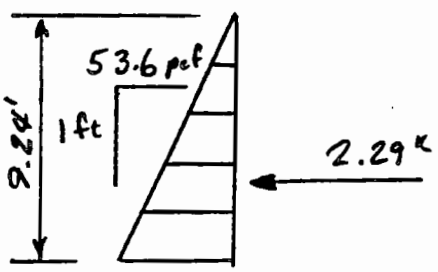

$R_{p\,max} = 0.0863\,(9.24')^2/2 = 3.68^k$

Assume Actual Passive Pressure Developed

$= \frac{2.29^k}{3.68^k}(86.3\,pcf) = 53.6\,pcf$

Add'l Moment due to 53.6 pcf developed passive pressure on w

$M_p = 0.0536\,(6.99')^3/6 = 3.05'^k$

$M_s = 0.0169\,(6.99)^3 + 0.166\,(6.99')^2 = 13.88$

$16.93'^k < 19.3'^k$ for 8' WALL DESI

OK

Shear OK by Observation

CLIENT Sun Oil		JOB NUMBER RC-0086	
SUBJECT Concrete Trench Design			
BASED ON		DRAWING NUMBER	
BY J. Schmohl	CHECKED BY R Duncan	APPROVED BY	DATE 11/20/92

Check @ Sta. 12+00

9.88' with sloped backfill on West Side vs. 6.88 Fill East Side

Slab Axial Load ($H = 9.88' + 2.50'$ slab $= 12.38'$) w/16° sloped backfill

$$P_{9.88S} = 0.0553H^2 + 0.5377H = 15.13^k$$

Slab Axial Load ($H = 6.88' + 2.50' = 9.38'$) Level backfill

$$P_{6.88L} = 0.0507H^2 + 0.332H = 7.57^k$$

Difference $= 15.13^k - 7.57^k = 7.56^k > 3.80^k$ Resisting Force

$$R_{P_{max.}} = 0.0863(9.38')^2/2 = 3.80^k$$

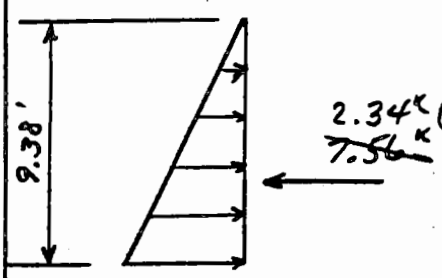

Assume the bank is cut back @ Sta. 11+50 thru Sta. 12+50 as shown on dwgs. 14015A & 14016A ($\beta = 21°$)

$$P_{6.88S} = 0.0553(9.38')^2 + 0.5377(9.38') = 9.91^k$$ $< 10.08^k$ V_{max} for wa

Difference $= P_{6.88S} - P_{6.88L} = 9.91^k - 7.57^k = 2.34^k$

Assume actual passive pressure developed $= \frac{2.34^k}{3.80^k}(86.3\,pcf) = 53.1\,pcf$

Add'l Moment on wall due to passive pressure

$$M_p = 0.0531(6.88)^3/6 = 2.88'^k$$
$$M_s = 0.0169(6.88)^3 + 0.166(6.88)^2 = 13.36$$
$$16.24'^k < 33.5'^k \text{ Allowable for 10' WALL DESIGN}$$

OK

CLIENT Sun Oil		JOB NUMBER RC-0086	
SUBJECT Concrete Trench Design			
BASED ON		DRAWING NUMBER	
BY J. Schmohl	CHECKED BY R DUNCAN	APPROVED BY	DATE 12/2/92

Wall Designs vs. Stations Along Trench – Discussion

At an informal meeting this A.M. with Tony Palmer, Roy Duncan & myself, my mark-up of dwg. 12025A was discussed. Tony did not want to see so many rebar changes for the walls, especially where the changes applied only to a relatively short length of the wall.

Roy explained that rather than looking only at rebars on dwg. 12025A, we should be looking at the design sketches (pages 103-107) which show the various wall design heights used to arrive at the wall rebar layouts. Roy had prepared several options for simplifying the reinforcing details by reducing the number of wall design height transitions. The options were studied and discussed. The following arrangement was agreed to, pending checking of the calculations and any adjustments needed later to accomodate railroad surcharges, if necessary:

Stations From	Stations To	Design Wall Height	Comments
0+00	4+75	10' WALL DESIGN	
4+75	7+00	13.2' " "	
7+00	7+73±	16.4' " "	Culvert @ 7+73± To 8+0
8+03±	11+00	13.2' " "	
11+00	16+43.5±	10' " "	Culvert @ 16+43.5± To 17+46
17+45.5±	19+25	10' ~~11.2'~~ " "	See if can justify 10' De
19+25	23+50	Looks O.K. 10' " "	Culvert @ 22+01.94± To 22+2
23+50	32+00	11.2' " "	
32+00	35+31 ±	13.2' " "	Culvert @ 32+93.24± To 33+81.2

The rebar changes were to be marked on the print of dwg. 12025, and given to Bill Davis this PM (12/2/92). I was to look at the calcs for the 11.2' wall Design noted above to see if the 10' wall design could be justified here. Roy estimated it would be 1½± weeks before he could check ca

CLIENT Sun Oil		JOB NUMBER RC-0086	
SUBJECT Concrete Trench Design			
BASED ON		DRAWING NUMBER	
BY J. Schmohl	CHECKED BY TR DUNCAN	APPROVED BY	DATE 12/3/92

Railroad Surcharge on Walls of Trench

From the Survey Key Plan for the Middle Creek Abatement Proj it appears that railroad tracks get close enough to the proposed trench at 5 different areas to merit consideratio

From CONRAIL Spec. CE-8, Section 4.1.2 (b), sheet pile and other structures adjacent to railroad tracks shall be designed for horizontal pressures due to a live load surcharge equal to

$$\text{"}q\text{"} = 80{,}000 \text{ Lb Axle} \Big/ \left[(8.5' \text{ tie length})(5' \text{ Axle Spacing})\right]$$

or $\text{"}q\text{"} = 1882 \text{ psf}$

in addition to other loads to which they will be subject

For railroad tracks running approximately parallel to the ℄ trench, the Boussinesq analysis for strip loads as outlined on Plate IX of Conrail's spec. should be used.

From Conrail's spec. sections 4.1 (b) & 4.2.1 (f)(1), it is the designer's interpretation that the tracks (in the future) could be located anywhere within the Conrail right-of-way This was discussed at an informal project meeting this morning (12/3/92). It was pointed out that this (future relocation of tracks) could have significant impact on the Concrete trench designs, since currently the designs are based On a 400 psf LL surcharge assumed for maintenance & construc equipment. Since some areas around the trench indicate Conrail right-of-way covers a wide area (particularly near the west end of th trench at the sumps), it is possible the trench would have to be designed for rail road surcharge in lieu of 400 psf. This will be discussed at a project meeting in Philadelphia on Monday (12/

CLIENT	Sun Oil	JOB NUMBER	RC-0086
SUBJECT	Concrete Trench Design		
BASED ON		DRAWING NUMBER	
BY J. Schmohl	CHECKED BY TR DUNCAN	APPROVED BY	DATE 12/3/92

While reviewing the limits of Conrail's right-of-way at our meeting this morning, it was observed that the tracks in the vicinity of trench stations 28+00 TO 31+00 are outside of Conrail's right-of-way. It was assumed that these tracks belong to the refinery, and therefore can be maintained at their current location. Design check for R.R. surcharge in this area is to proceed on this basis, subject to confirmation at the project meeting next week.

From dwg. 25020A, distances from ℄ trench to ℄ R.R. tracks were scaled as follows:

		Track Elevations
Track #1	28'	11.63' (Survey dwg Sh ~E 11+25± (Near P.I. #12 (Ref. dwg. 1403
" #2	47'	
" #3	66'	

Top of Bottom Slab in Ditch @ Sta 30+64± (P.I. #12) = EL.(-)1

Ref. Conrail Spec., Plate V

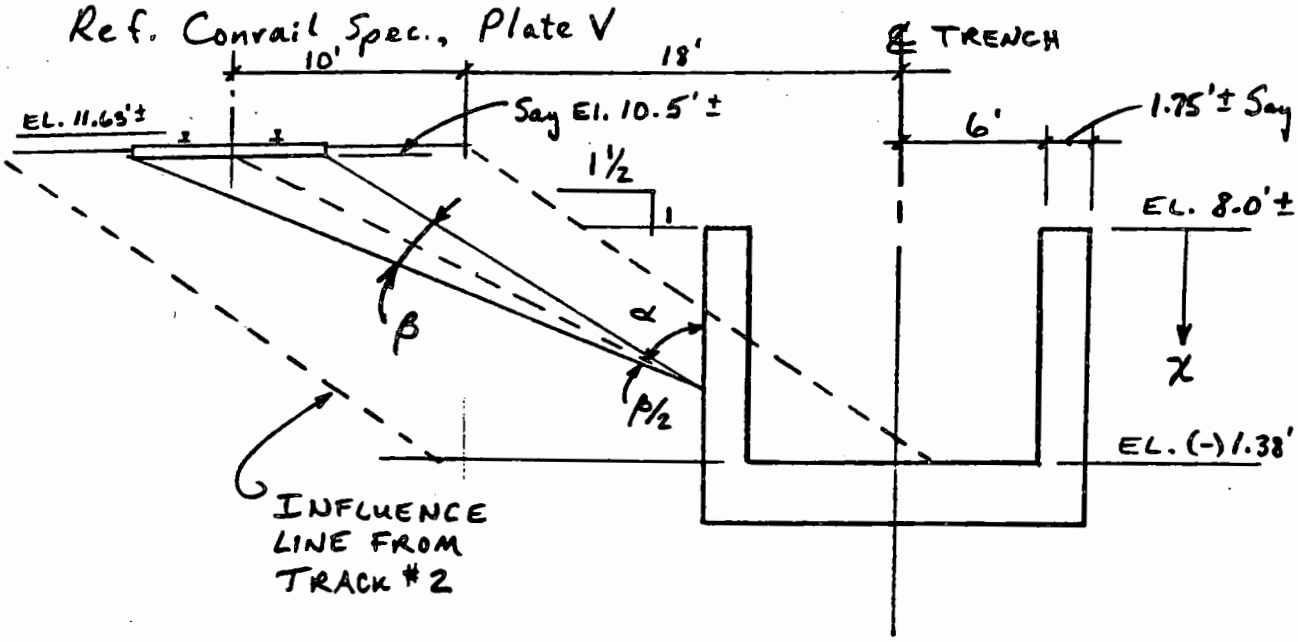

Ref. also dwg. 14039A, Section @ Sta. 30+50

CLIENT Sun Oil		JOB NUMBER RC-0086	
SUBJECT Concrete Trench Design			
BASED ON		DRAWING NUMBER	
BY J. Schmohl	CHECKED BY R DUNCAN	APPROVED BY	DATE 12/3/92

From the sketch on the previous page, Track #1 will affect the trench wall based on the designer's interpretation of the criteria outlined in the Conrail spec. section 4.2.1(f)(6) an Plate V. Track #2 will not be considered since its influence line does not intersect the trench wall.

From Conrail spec., Plate IX, the horizontal pressure component due to a strip load is

$$P_h = (2q/\pi)(\beta - \sin\beta\cos 2\alpha)$$

Expressed in Radians

$$= [2(1882)/\pi][\beta - \sin\beta\cos 2\alpha) = 1198(\beta - \sin\beta\cos 2$$

For the geometry on the previous page

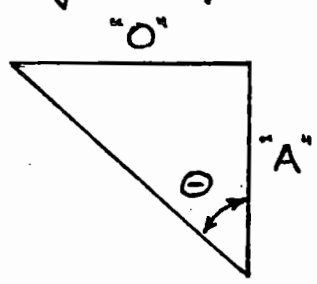

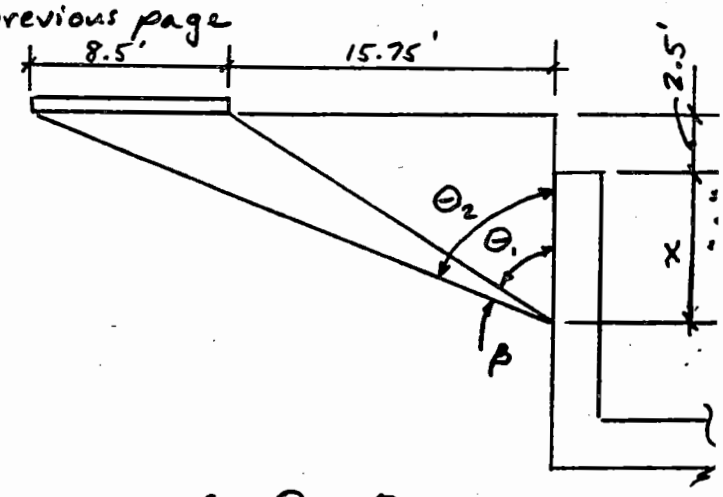

$$\Theta = \tan^{-1}\left(\frac{O}{A}\right)$$

where

$A = 2.5' + x$ $\qquad \beta = \Theta_2 - \Theta_1$

$O_1 = 15.75'$ $\qquad \alpha = \Theta_1 + \beta/2$

$O_2 = 15.75' + 8.5' = 24.25'$ $\qquad 2\alpha = 2\Theta_1 + \beta = \Theta_1 + \Theta_2$

x	A	Θ_1	Θ_2	$\beta°$	2α	β(Rad)	P_h
0	2.5'	81.0°	84.1°	3.1°	165.1°	0.0541	127.4 p
2	4.5	74.1°	79.5°	5.4°	153.6°	0.0942	213.8
4	6.5	67.6°	75.0°	7.4°	142.6°	0.1292	277.4
6	8.5	61.6°	70.7°	9.1°	132.3°	0.1588	317.8
8	10.5	56.3°	66.6°	10.3°	122.9°	0.1798	331.8

ALL < 332 OK

CLIENT Sun Oil		JOB NUMBER RC-0086	
SUBJECT Concrete Trench Design			
BASED ON		DRAWING NUMBER	
BY J. Schmohl	CHECKED BY R DUNCAN	APPROVED BY	DATE 12/4/92

Comparing the values of P_h with the horizontal effect of 400 psf live load from maintenance & construction equipment (332 psf horizontal, ref. p. 4), it is obvious that the 400 psf surcharge will control here (Sta 28+00 to 31+00).

Trench @ 21+00± to 22+00±

From print of (long) dwg. ? A-27428 "Process & Service Lines" which shows R.R. property lines, the rails in this vicinity appear to be on Sun Oil Property. Assume the rails will remain in their present location.

Scaling from dwg. 25023A, distances from ℄ trench to ℄ R.R. tracks were located as follows:

Track	#1	32.5'
"	#2	51'
"	#3	69'

Track Elevations (Survey Dwg Sh. 10)
10.5'± (Near P.I. #5 Ref. dwg. 14031A)

Top of Bottom Slab in ditch @ Sta. 22+00± = EL. 1.56'

By observation, this geometry will give lower horizontal load components than obtained previously for Sta. 28+00 to 31+00.

Therefore, maintenance / construction equipment surcharge will control the design.

CLIENT Sun Oil		JOB NUMBER RC-0086	
SUBJECT Concrete Trench Design			
BASED ON		DRAWING NUMBER	
BY J. Schmohl	CHECKED BY R DUNCAN	APPROVED BY	DATE 12/4/92

Trench @ Sta. 2+00 ± to 3+00 ± (Near P.I. #1)

With reference to dwg. 25015A, the R.R. track shown closest to the proposed trench continues onto dwg. 25016A. This rail appears to stop south of post road, and does not appear to be connected at the south end. Therefore, assume this track is removed or abandoned. ⊛

The next closer track as shown on dwg. 25015A continues onto dwg. 25014A, where it is shown to be demolished over the proposed trench alignment. There is also a note to field verify that this track has been covered (with earth?). Therefore, assume this track has also been abandoned. ⊛

From dwg. 25015A, the next closer track scales 38' ± from ℄ trench to ℄ track. By observation, this track will not control the trench design.

⊛ Note: these rails do not show up on the Marcus Hook Key plans, nor do they appear to be active from looking at the aereal photo of the refinery.

Note: Per discussions later today (12/4/92) with Lou Martinez and Jim Uptigrove, these rails are not in service.

CLIENT	JOB NUMBER
Sun Oil	RC-0086
SUBJECT: Concrete Trench Design	
BASED ON	DRAWING NUMBER

BY	CHECKED BY	APPROVED BY	DATE
J. Schmohl	R DUNCAN		12/4/92

Trench @ Sta 32+50 ± to 34+50 ±

℄ Trench to ℄ R.R. track @ Ends of Culvert (Ref. Dwg. 14033

		⊥ Trench	⊥ Track	
E9+17 ±	Sta. 32+93	22' (23.5')	21'	EQUIVALENT - USING 8' FROM ℄ TRENCH TO OUTSIDE OF WALL
E8+29 ±	" 33+81	19' (16')	18'	

Dwg. 25019A Gives 20' — dwg. 02125B & 02129B

Using for Design 18' (Nominal) ℄ Trench to ℄ Track and referring to sketches on pages 121 & 122

Top of Rail	Sta. 32+93	EL. 11.2 ±	Survey dwg. sh. 12
	" 33+81	EL. 11.2 ±	

Top of Bottom Slab in Ditch @ sta. 33+81 ± = EL. (-) 2.46

Say (-) 2.50

Say EL. @ Bottom of R.R. tie = EL. 10.0 ±

12' deep trenc

Top of Trench Wall @ EL. 8.0' to 9.5' (Ref. calc. p. 107)

Use Top of Wall @ EL. 9.5' for Design, so $A = 0.5' + x$

$\Theta_1 = 18' - 4.25' - 8' = 5.75'$ $\qquad \beta = \Theta_2 - \Theta_1$

$\Theta_2 = 5.75' + 8.5' = 14.25'$ $\qquad 2\alpha = 2\Theta_1 + \beta$

x	A	Θ_1	Θ_2	$\beta°$	2α	β (Rad)	P_h
0	0.5	85.0°	88.0°	3.0°	173.0°	0.0524	125.0 p
2	2.5	66.5°	80.0°	13.5°	146.5°	0.2356	515.5
4	4.5	52.0°	72.5°	20.5°	124.5°	0.3578	666.3
6	6.5	41.5°	65.5°	24.0°	107.0°	0.4189	644.3
8	8.5	34.1°	59.2°	25.1°	93.3°	0.4381	554.1
10	10.5	28.7°	53.6°	24.9°	82.3°	0.4346	453.1
12	12.5	24.7°	48.7°	24.0°	73.4°	0.4189	362.6

CLIENT Sun Oil		JOB NUMBER RC-0086	
SUBJECT Concrete Trench Design			
BASED ON		DRAWING NUMBER	
BY J. Schmohl	CHECKED BY R DUNCAN	APPROVED BY	DATE 12/7/92

Plot R.R. Surcharge @ Sta. 33+81 ±

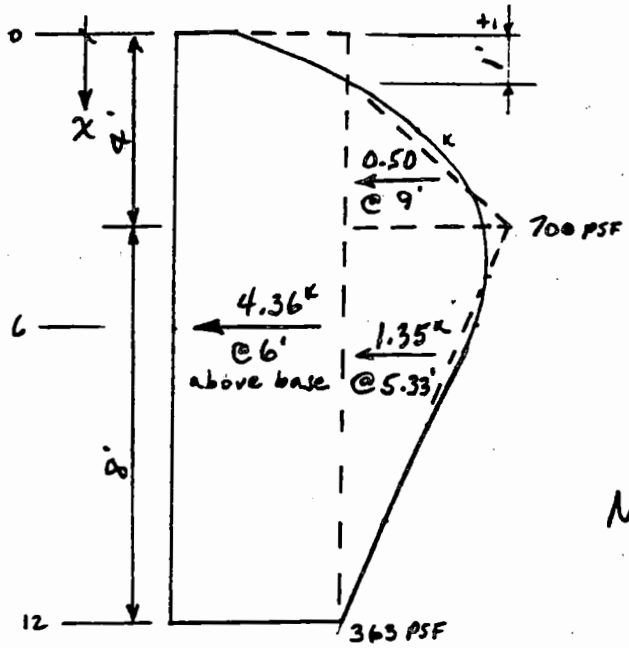

Assume smooth curve area replaced by a rectangle and two triangles (shown dashed) with resultants as shown.

R.R. Surcharge Only

$V_{max @ x=12} = 4.36^k + 0.50 + 1.35 = 6.$

$M_{max @ x=12} = 4.36^k(6') + 0.50(9') + 1.35($
$= 26.16'^k + 4.50 + 7.20 = 37.$

Net Resultant = 6.21^k @ 6.10' above base
~ Mid Height of w

Combine the Above R.R. Surcharge Shears & Moments with earth & water values for level backfill as developed on page 4. Do not include 400 psf surcharge, as the above R.R. surcharge replaces it.

Resultants @ Base of Wall

R.R. Surcharge		=	6.21^k		= $37.86'^k$
Buoyed Soil	43 pcf (0.91)(12')(12'/2)	=	2.82	@ 12'/3	= 11.28
Water	62.4 pcf (12')(12'/2)	=	4.49	@ 12'/3	= 17.96
			13.52^k		67.10

Compare with 13.2' wall Design (Ref. p. 107) shears and moments as summarized on p. 67:

13.2' WALL DESIGN	Design Req'd for 12' Wall w/ R.R. Surcharge & Level Backfill
V_{max} = 16.73^k	V_{max} = 13.52^k
M_{max} = $89.26'^k$	M_{max} = $67.10'^k$

So 13.2' wall Design OK by Observation

Brown & Root USA, Inc.

Calculation Worksheet Sht. No.:

Client: SUN OIL Job No.: RC-0086

Subject: LATERAL EARTH PRESSURE DUE TO STRIP LOAD & CONRAIL SPEC, PLATE IX

Based On: U.S. SHEET PILE DESIGN Dwg. No.:

Des. By: RDIII Ck'd By: R DUNCAN App. By: Date: 12/07/92

INPUT

Actually Output

l =	5.75	(Location of strip, ft)
m =	0.46	(Location of strip; based on ratio to H)
k =	0.68	(Width of strip; based on ratio to H)
q =	1882	(Value of surcharge, psf)
H =	12.5	(Wall Height, ft)
w =	8.5	(Width of strip, ft)

DEFINITIONS

GAM1 = ATAN(m/n)
GAM2 = ATAN((m+k)/n)
ALPHA = GAM1 + BETA/2
BETA = GAM2 - GAM1

PRESSURE DISTRIBUTION (SIGMA)

n	GAM1	GAM2	ALPHA	BETA	SIGMA	Ai*yi
0.05	1.46	1.53	1.49	0.06	153.47	119.90
0.15	1.26	1.44	1.35	0.18	419.09	982.25
0.25	1.07	1.35	1.21	0.28	589.79	2303.85
0.35	0.92	1.27	1.10	0.35	663.59	3629.00
0.45	0.80	1.19	1.00	0.40	667.12	4690.68
0.55	0.70	1.12	0.91	0.42	629.63	5410.92
0.65	0.62	1.05	0.83	0.44	572.67	5816.14
0.75	0.55	0.99	0.77	0.44	509.49	5970.63
0.85	0.50	0.93	0.71	0.43	447.43	5942.44
0.95	0.45	0.88	0.66	0.43	390.06	5790.00
				TOTAL =	5042.34	40655.82

RESULTANT = .1*H*SIGMA(TOT) = 6302.93 lbs vs. 5530 for 12' wall (Manual Calcs w/Ord. @ 1/6 P

LOCATION = TOT(Ai*yi)/RESULTANT = 6.45 ft
RATIO = LOCATION/H = 0.52

WKSHT

CLIENT Sun Oil		JOB NUMBER RC-0086	
SUBJECT Concrete Trench Design			
BASED ON		DRAWING NUMBER	
BY J. Schmohl	CHECKED BY R DUNCAN	APPROVED BY	DATE 12/7/92

Trench @ Sta. 16+52 & 17+37

Sta. 17+37 - Tracks ⊥ to Trench
From Dwg. 14009A
℄ Track #1 is 13.5' ± from End of Culvert / Start of Trench wall
" " #2 " 26' ± " "

Top of Rail Elev. @ E 23+12 ± = EL. 13.15' ± (Ref Sh. 7 of Survey Dwgs)
Say bottom of R.R. tie @ EL. 12.0' ±

Top of Bottom Slab in Ditch @ Sta. 17+37 = EL. 3.13' ±

Top of Trench wall @ EL. 11.5' ± (@ Sta. 17+50, see calc. p. 105)

Note: Since ℄ R.R. Tracks are ⊥ to trench at this location, we need to use an analysis method that accounts for the reduction in wall loads from R.R. Surcharge as the Surcharge moves away from the wall. Referring to U.S. Steel's publication "Steel Sheet Piling Design Manual" April, 1972, page 14 thru 16, analysis methods are given for point loads, line loads, and strip loads. Note that the strip load solution is the same as that given in Conrail's Plate IX. However, the point load method is the only one of these methods that accounts for a changing distance between surcharge load and the portion of wall under investigation.

Using U.S. Steel's point Load analysis, and assuming each 80,000 LB axle as a point load located at the ℄ R.R. Track, plot influence lines as was done on p. 121.

CLIENT	Sun Oil	JOB NUMBER	RC-0086
SUBJECT	Concrete Trench Design		
BASED ON		DRAWING NUMBER	
BY J. Schmoll	CHECKED BY R DUNKAN	APPROVED BY	DATE 12/7/92

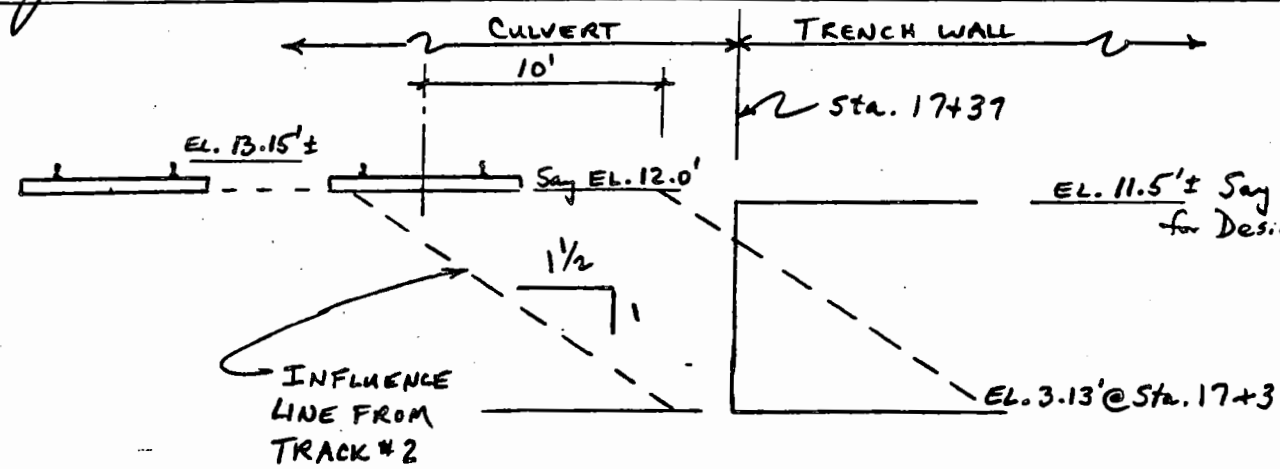

For Point Load Analysis

$H = 9.0' \pm$

$Q_p = 80.0^k$

$m \le 0.40 \quad P_h = 0.78 \frac{Q_p}{H}$ & $L = 0.$

$m > 0.40 \quad P_h = 0.45 \frac{Q_p}{H}$ & $L = 0$

x	m	P_h	L	$P_h(L)$
1'	0.11	6.93^k	5.31'	36.80
2'	0.22	6.93	5.31'	36.80
3'	0.33	6.93	5.31'	36.80
4'	0.44	4.00	4.32	17.28
5'	0.56	4.00	4.32	17.28
etc.				

This appears too simplistic for solution of 4 train axles @ 5 Assume Axles @ 3', 8', 1 and 18 feet from the and develop $\Sigma \sigma_H$ dia

σ_H @ m

Z	n	m = 0.33	m = 0.89	m = 1.44	m = 2.00
1	0.11	0.656	0.032	0.005	0.001
2	0.22	1.479	0.113	0.018	0.005
3	0.33	1.549	0.206	0.038	0.011
4	0.44	1.211	0.280	0.060	0.018
5	0.56	0.816	0.321	0.084	0.027
6	0.66	0.570	0.326	0.100	0.035
7	0.77	0.384	0.309	0.113	0.043
8	0.88	0.263	0.278	0.122	0.050
9	1.0	0.177	0.240	0.124	0.056
		7.105 ≈ 6.93^k above			

CLIENT Sun Oil		JOB NUMBER RC-0086	
SUBJECT Concrete Trench Design			
BASED ON		DRAWING NUMBER	
BY J. Schmohl	CHECKED BY R DUNCAN	APPROVED BY	DATE 12/7/92

The ordinates on the previous page are pressure distribution along a vertical line closest to the respective point loads (ie, ⊥ to ℄ trench @ ℄ Tracks.

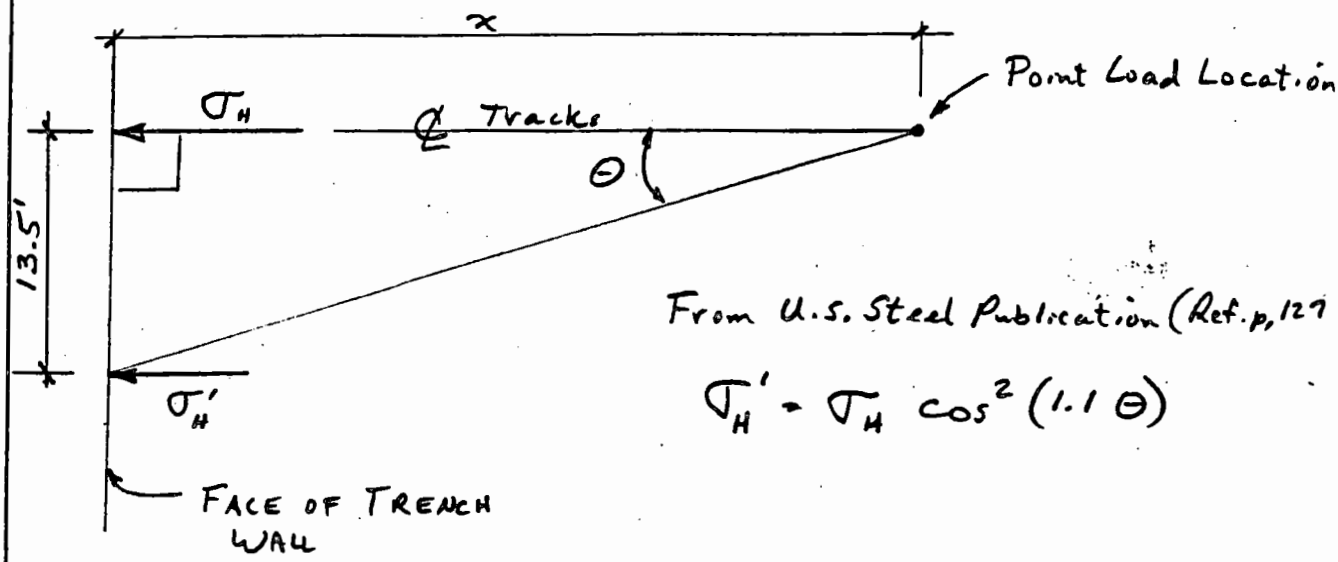

From U.S. Steel Publication (Ref. p. 127

$$\sigma_H' = \sigma_H \cos^2(1.1\,\theta)$$

Axle @ m =	x =	θ =	$1.1\,\theta$	$\cos^2(1.1\theta)$
0.33	3'	77.5°	85.3°	0.0067
0.89	8'	59.3°	65.2°	0.1759
1.44	13'	46.1°	50.7°	0.4012
2.00	18'	36.9°	40.6	0.5765

$\Sigma\, \sigma_H \cos^2(1.1\,\theta)$

Z	
1	0.0126 KSF
2	0.0399
3	0.0682
4	0.0918
5	0.1112
6	0.1215
7	0.1271
8	0.1284
9	0.1254

$= \sigma_{max} < 332$ psf for 400 psf Maintenance Surcharge ← CONTROLS

CLIENT Sun Oil		JOB NUMBER RC-0086	
SUBJECT			
BASED ON		DRAWING NUMBER	
BY J. Schmohl	CHECKED BY R DUNCAN	APPROVED BY	DATE 12/7/92

Sta. 17+37 (Cont'd)

Looking at Wall Pressure another way, look at the pressure ordinates on a vertical plane // to ℄ Rail (Sta. 17+37). Note that this force is parallel to the trench wall. Assume the forces ⊥ to the trench wall are derived similar to at-rest earth pressures on the wall, ie

$$p_{\perp} = K_o\, p_{\parallel} = 0.91\, p_{\parallel}$$

Since the wall/trench is rigid and the trains may pass frequently

Compute force on plane similar to wall on p. 121 & 122 $\begin{cases} \Theta_1 = 9.2 \\ \Theta_2 = 17.7 \\ x = A \end{cases}$

x	A	Θ_1	Θ_2	$\beta°$	2α	β(rad)	P_h
0	0	90°	90°	0°	180°	0.0000	0
2	2	77.8°	83.6°	5.8°	161.4°	0.1012	236.
4	4	66.6°	77.3°	10.7°	143.9°	0.1868	403.
6	6	57.0°	71.3°	14.3°	128.3°	0.2496	482.
8	8	49.1°	65.7°	16.6°	114.8°	0.2897	490.
9	9	45.8°	63.1°	17.3°	108.9°	0.3019	477.

x	$0.91 P_h$
0	0
2	214.8
4	367.2
6	439.0
8	446.4
9	434.2

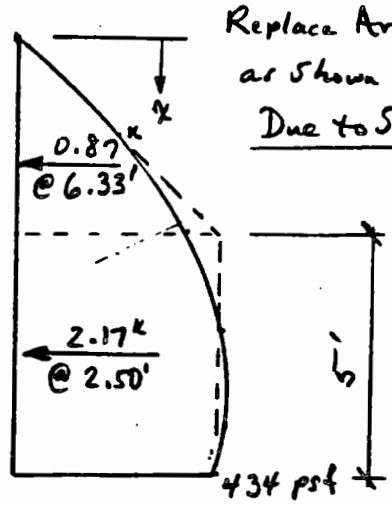

Replace Area Under Curve by Rectangle & Tri. as shown by dashed lines

Due to Surcharge: $V = 0.87^k + 2.17^k = 3.04$

$M = 0.87^k(6.33') + 2.17^k(2.50$

$= 5.51'^k + 5.43'^k = 10.$

CLIENT Sun Oil		JOB NUMBER RC-0086	
SUBJECT Concrete Trench Design			
BASED ON		DRAWING NUMBER	
BY J. Schmahl	CHECKED BY R DUNCAN	APPROVED BY	DATE 12/7/92

Sta. 17+37 (Cont'd)

Resultants @ Base of Wall

R. R. Surcharge		= 3.04^k		= 10.94'
Buoyed Soil	43pcf(0.91)(9')(9'/2)	= 1.58	@ 9'/3	= 4.74
Water	62.4 (9')(9'/2)	= 2.53	@ 9'/3	= 7.59
		7.15^k		23.27

Compare with 10' wall Design (Ref. p. 105) shears and moments as summarized on p. 36 & shear on p. 4

10' wall Design

V_{max} = 10.08^k

M_{max} = 33.5$'^k$

Design Req'd for 9' wall w/ R.R. Surcharge & Level Backfill

V_{max} = 7.15^k

M_{max} = 23.3$'^k$

So 10' wall Design OK by observation

CLIENT Sun Oil		JOB NUMBER RC-0086	
SUBJECT Concrete Trench Design			
BASED ON		DRAWING NUMBER	
BY J. Schmohl	CHECKED BY R DUNCAN	APPROVED BY	DATE 12/7/92

Trench @ Sta. 16+52

From dwg. 14009A, ℄ Trench to ℄ Rail (equivalent dimensi
using 8' from ℄ trench to outside face of wall) = 14'+8'=2
(vs. 13.5' for wall @ Sta 17+37)

Top of Rail Elev. @ E 23+07 ± = EL. 13.3 ± (Ref. dwg Sh. 7 of Surveys)

Top of Bottom Slab in Ditch @ Sta. 16+52 = EL. 4.59' ± ⊛

Top of Trench Wall @ EL. 12.5' ± (@ Sta. 16+50, see calc. p. 10.

By observation, design at R.R. culvert on previous sheet is more severe than at this location, so 10' wall Design is satisfactory.

⊛ ELEV. WOULD ACTUALLY BE 4.5
ASSUMING THIS SECTION OF TRE
IS AHEAD OF THE BOX CULVERT
AS ASSUMED FOR DESIGN (THE BO
CULVERT NOW STARTS @ STA. 16+43

JGS 1/14/93

CLIENT Sun Oil		JOB NUMBER RC-0086	
SUBJECT Concrete Trench Design			
BASED ON		DRAWING NUMBER	
BY J. Schmohl	CHECKED BY R Duncan	APPROVED BY	DATE

APPENDIX - TABLE OF CONTENTS

Description	Pages
Table 6.0 from Project Soil Report	A
Equivalent Fluid Pressure for Various Soil Conditions	B
Comparison of Loose vs. Dense Type "F" Fill	C
Embedment of Dowels and Standard Hooks in Slabs and Walls	D
Allowable Stress for Crack Control, #3, #4 & #5 w/2" Cover	E
Top of Wall Elevations along Conveyance Trench	F
Bottom of Trench Elevations (2'-0" Below P.I. of PWW Pipe)	G
Deflection of Walls at Top of Trench	H - I
Water Surface Elevations Inside the Trench	J - K
Axial Loads and Moments for Design of Trench Bottom Slab	L
Nominal Axial Load Strength of Trench Bottom Slabs for Balanced Strain Conditions	M
Preliminary Design - Comparison of ACI 318 and ACI 350 Design Methods - INDEX	N_i
CALCS	Pages N_1 - N_{18}

DESIGN SOIL PROPERTIES
SUN OIL-MCAP
ML3626-20
JD 4/8/92
REVISED 4/23/92

SOIL DESCRIPTION	SYMBOL	STRATUM F "LOOSE" FILL SPT < 10	STRATUM F "DENSE" FILL SPT ≥ 10	STRATUM 1A SILT/CLAY	STRATUM 1B RECENT ORGANIC SILT/CLAY	STRATUM 1C OLD ORGANIC SILT/CLAY	STRATUM 2 SAND AND GRAVEL	STRATUM 3 DECOMPOSED ROCK
UNIT WEIGHT (pcf)	γ	105	125	130	90	100	130	130
BUOY. UNIT WEIGHT (pcf)	γb	43	63	68	28	38	68	68
ANGLE OF INTERNAL FRICTION(°)	ϕ	5-10	20	15	10	15	38	25
COHESION (psf)	c	100-300	200-500	1200	600	800	0	2500
ADHESION (psf)	ca	50	150	700	400	500	0	1500
POISSON'S RATIO	ν	0.2-0.4	0.2-0.4	0.3	0.4	0.4	0.2	0.3
ACTIVE EARTH PRESSURE COEFF.	Ka	0.83	0.50	0.59	0.70	0.59	0.24	0.41
AT-REST EARTH PRESSURE COEFF.	Ko	0.91	0.66	0.74	0.83	0.74	0.38	0.58
PASSIVE EARTH PRESSURE COEFF.	Kp	1.19	2.03	1.70	1.42	1.70	4.00	2.40
FRICTION FACTOR	tan δ	0.3	0.3	0.4	0.3	0.3	0.4	0.4
COEFFICIENT OF PERMEABILITY (cm/sec)	K	5.0E-04 5.0E-05	5.0E-04 5.0E-05	1.0E-06 1.0E-07	1.0E-04 5.0E-06	1.0E-04 5.0E-06	1.0E-03 1.0E-05	1.0E-05 1.0E-06

← RANKINE. $K_a = \tan^2(\ldots)$

← RANKINE; $K_p = \frac{1}{K_a}$ = ...

NOTES:
- ADHESION AND FRICTION FACTORS ARE FOR SOILS AGAINST ROUGH CONCRETE ← ASSUME MASSIVE CONCRETE
- FILL SOIL PARAMETERS VARY APPRECIABLY FROM LOCATION TO LOCATION, VALUES STATED ARE AVERAGE

SHEET 1 OF 2

TABLE 6.0

FRICTION FACTOR (STEEL) BASED ON NAVDOC TABLE	tan δ	0.2	0.2	0.25	0.2	0.2	0.25	0.25	← BASED ON COMPARISON

SITE

Calculation Worksheet Sht. No.: B

Client: SUN REFINING Job No.: RC-0086

Subject: EQUIVALENT FLUID FOR AT-REST & ACTIVE LATERAL EARTH PRESSURES

Based On: SOILS REPORT Dwg. No.:

Des. By: RDIII Ck'd By: JJS 9/24/92 App. By: Date: 07/09/92

AT-REST PRESSURE

STRATUM	WET UNIT WT. (pcf) G	WATER UNIT WT. (pcf) Gw	BUOY. UNIT WT. (pcf) Gs	Ko	EQUIVALENT FLUID Above Water G*Ko	Below Water Gs*Ko	Below Water Gs*Ko+Gw
F LOOSE	105	62	43	0.91	96	39	101
F DENSE	125	62	63	0.66	83	42	104
1A	130	62	68	0.74	96	50	112
1B	90	62	28	0.83	75	23	85
1C	100	62	38	0.74	74	28	90
2	130	62	68	0.38	49	26	88

ACTIVE PRESSURE

STRATUM	WET UNIT WT. (pcf) G	WATER UNIT WT. (pcf) Gw	BUOY. UNIT WT. (pcf) Gs	Ka	EQUIVALENT FLUID Above Water G*Ka	Below Water Gs*Ka	Below Water Gs*Ka+Gw
F LOOSE	105	62	43	0.83	87	36	98
F DENSE	125	62	63	0.5	63	32	94
1A	130	62	68	0.59	77	40	102
1B	90	62	28	0.7	63	20	82
1C	100	62	38	0.59	59	22	84
2	130	62	68	0.24	31	16	78

Structure _____
Live Load Per Square Foot _____

Computed By _____
Working Stress _____

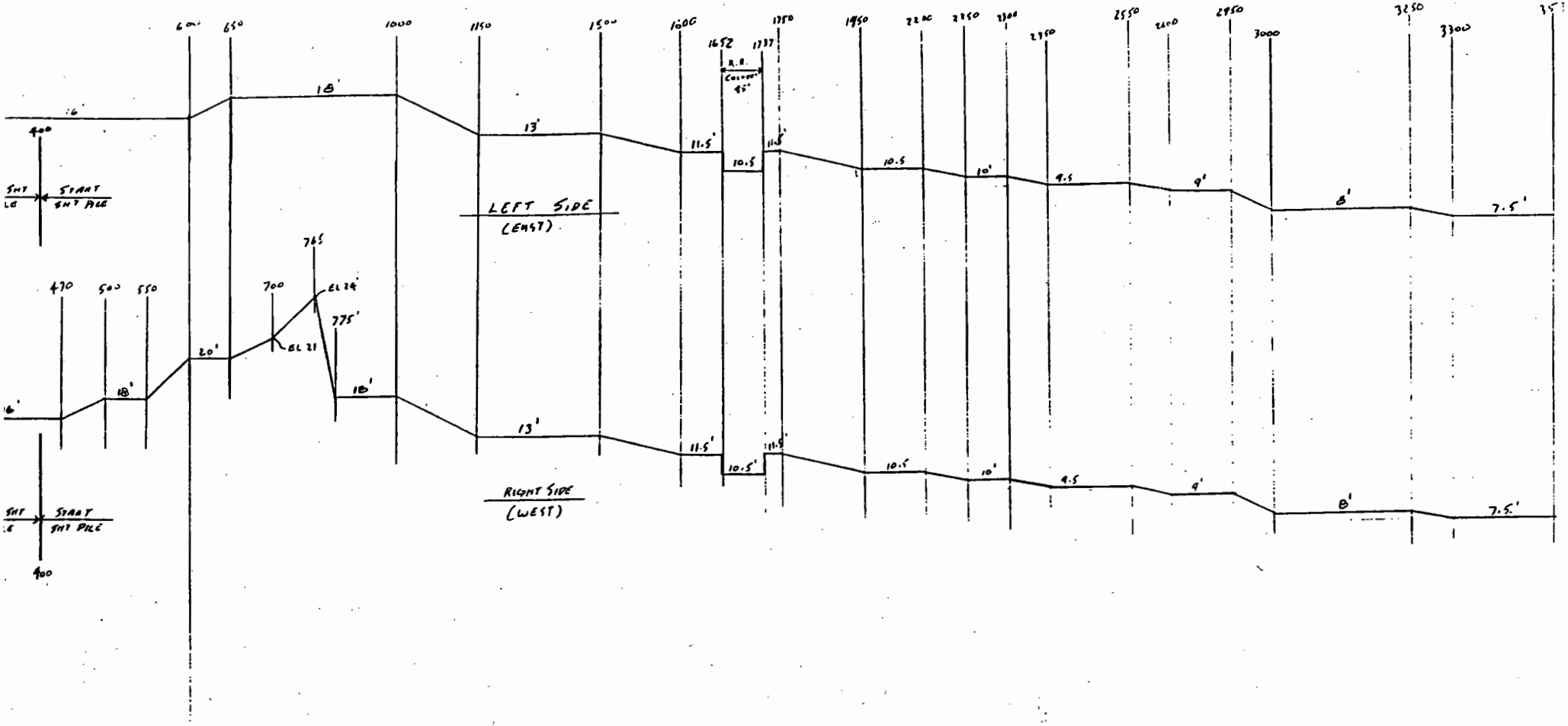

WALL HEIGHTS ALONG CONVEYANCE ACCORDING TO BILL DAVIS AS OF 9/15/92. ELEVATIONS CAME FROM KAWS MARKUP.
EL. STILL GOOD (10/6/92) ACCORDING TO BILL.

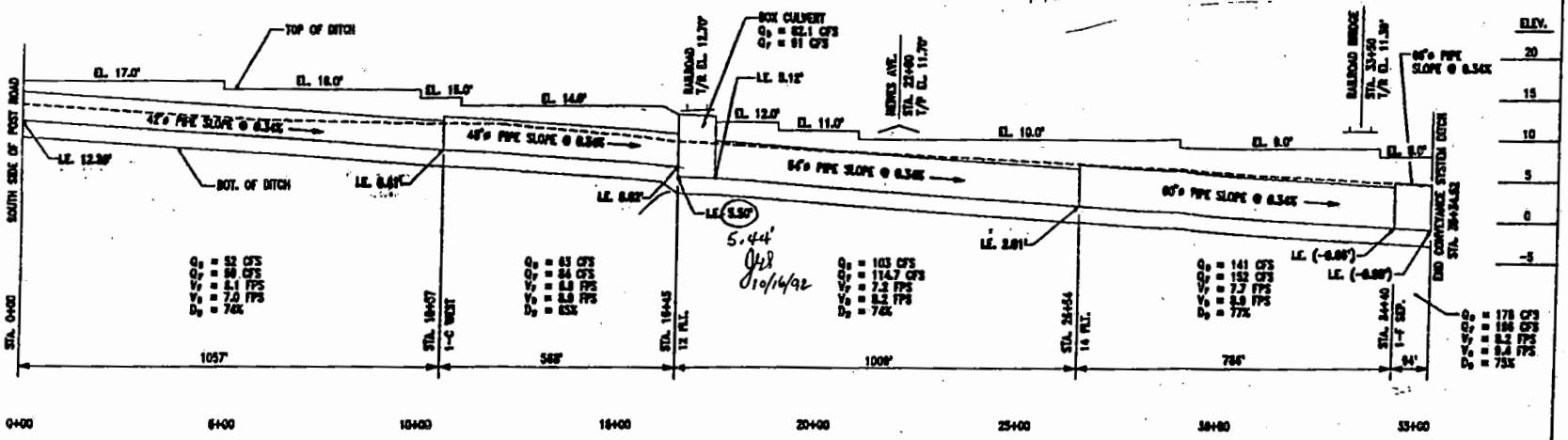

PROFILE
SCALE: HORIZ. 1"=100'-0"
VERT. 1"=5'-0"

Top of Concrete @ Bottom Slab of Trench is 2.0' below invert of pipe. JLB 10/16/92

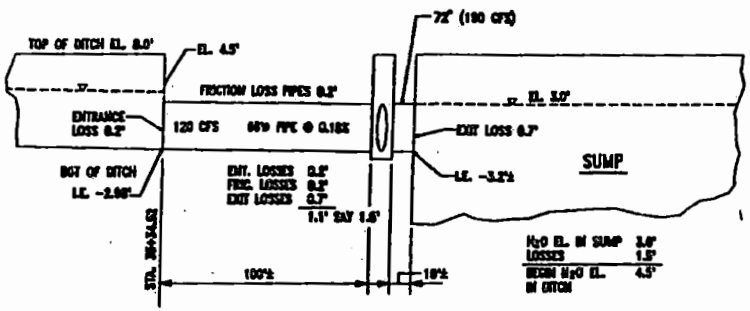

PROFILE
SCALE: HORIZ. 1"=20'-0"
VERT. 1"=5'-0"

10/6/92

DISCUSSION W/ CURTIS BELL REVEALED THAT THESE INV. EL. ARE GOOD. STA. 16+45 INV. EL. MAY CHANGE A LITTLE, BUT ARE CORRECT AS OF TODAY.

MED 10/6/92

PRELIMINARY

SUN REFINING AND MARKETING COMPANY
MARCUS HOOK REFINERY

CIVIL
PLAN & PROFILE
CONVEYANCE SYSTEM

XXXXXX
XXXXXX

A

CLIENT Sun Oil		JOB NUMBER RC-0086	
SUBJECT Deflection of Conveyance Trench Walls			
BASED ON		DRAWING NUMBER	
BY J. Schmohl	CHECKED BY R DUNCAN	APPROVED BY	DATE 10/16/92

Deflection of Walls at Top of Trench:

Compute approximate deflection at top of 11.2' High Trench walls under service load conditions without Live Load Surcharge.

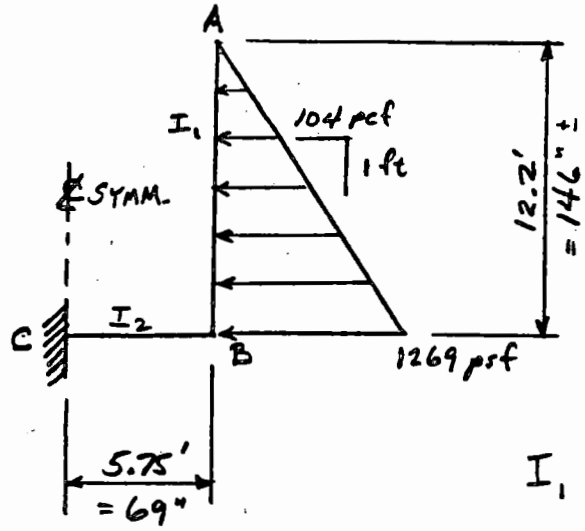

At-Rest Pressure of Type "F Dense" Soil is Equivalent to a Liquid Pressure of a 104 pcf Fluid

Disregard Vertical Forces and Reactions (Conservative).

$$I_1 = \frac{bh_1^3}{12} = \frac{12"(18")^3}{12} = 5{,}832 \text{ in}^4$$

$$I_2 = \frac{bh_2^3}{12} = \frac{12(24")^3}{12} = 13{,}824 \text{ in}^4$$

$$\text{Moment @ Base of Wall} = \frac{104(12.2)^3}{6} = 31{,}475 \text{ ft-lb} = 377.7 \text{ in-k}$$

Use Moment-Area Principles to Determine Rotation at Joint "B":

Using Conjugate Beam Analysis, assume conjugate beam with M/EI Loading and conjugate end conditions as follows:

Left End: Fixed - Had no slope, no deflection.
Conjugate must have no shear, no moment, so left End of Conjugate Must be Free.

Right End: Free - Had slope, deflection.
Conjugate must have shear, moment, so right end of Conjugate must be fixed.

CLIENT Sun Oil		JOB NUMBER RC-0086	
SUBJECT Deflection of Trench Walls			
BASED ON		DRAWING NUMBER	
BY J. Schmohl	CHECKED BY R DUNCAN	APPROVED BY	DATE 10/16/92

Conjugate Beam with M/EI Loading:

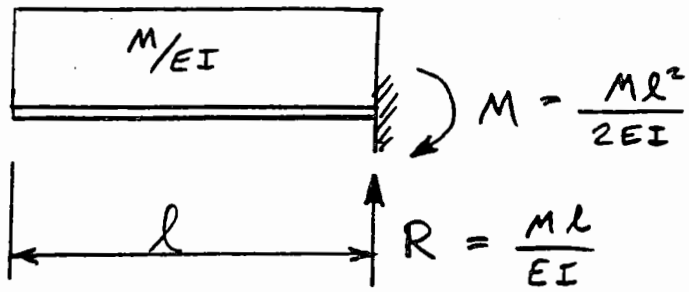

Slope of actual beam is equal to reaction of Conjugate,

So slope $\beta = \frac{M\ell}{EI} = \frac{377.7 \text{ in-k } (69")}{3.6\times10^3 \text{ ksi } (13{,}824 \text{ in}^4)} = 0.00052367$ Radians

$\beta = 0.03000$ degr

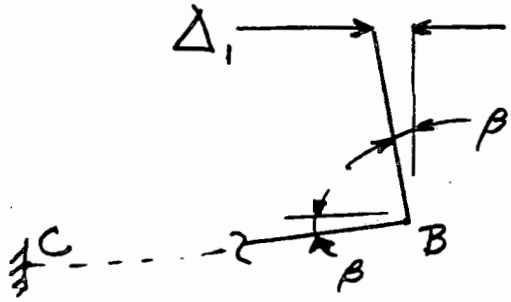

Horiz. Movement @ Top of wall due Rotation @ Base of wall

$\Delta_1 = 146" \tan\beta = 0.076"$

Neglect Horiz. Effect of Point "B" Rotating in closer to Point "C"

<u>Deflection Due to Cantilever Wall</u> (Assume Fixed @ Base)

$$\Delta_2 = \frac{w\ell^4}{30EI} = \frac{1.269 \text{ k/ft}(12.2')^4(12'')^3}{30(3.6\times10^3 \text{ ksi})(5{,}832 \text{ in}^4)} = 0.077"$$

Total Deflection $= \Delta_1 + \Delta_2 = 0.076" + 0.077" = 0.153"$ @ Top of wall

NOTE:

If we were to use "EI" = $0.5E_cI_g$ per ACI 318-R.10.10.1, the total computed deflection would be twice the above value, still ok

CLIENT	JOB NUMBER
SUN OIL	RC-0086

SUBJECT: CONCRETE TRENCH DESIGN

BASED ON	DRAWING NUMBER
ACI 350-89 ALTERNATE DESIGN METHOD	

BY	CHECKED BY	APPROVED BY	DATE
M DYE	J. Schmohl		10/13/92

WATER SURFACE ELEVATIONS INSIDE THE TRENCH

STATION	H_2O El.	TOP OF SLAB (PIPE INV - 2ft)	H_2O HEIGHT
0+00	14.22'	10.20'	4.02'
2+00	13.83'	9.52'	4.31'
4+00	13.44'	8.84'	4.60'
6+00	13.05'	8.16'	4.89'
8+00	12.63'	7.48'	~~5.51'~~ 5.15
10+00	12.20'	6.80'	5.40'
12+00	11.78'	6.12'	5.66'
14+00	10.91'	5.44'	5.47'
16+00	10.04'	4.76'	5.28'
		STEP IN TRENCH	
18+00	9.17'	2.92'	6.25'
20+00	8.71'	2.24'	6.47'
22+00	8.25'	1.56'	6.69'
24+00	7.79'	0.88'	6.91'
26+00	7.25'	0.20'	7.05'
28+00	6.71'	-0.48'	7.19'
30+00	6.17'	-1.16'	7.33'
32+00	5.55'	-1.84'	7.39'
34+00	4.92'	-2.52'	7.44'
35+34.52	4.50'	-2.98'	7.48'

BASIS: MARKED UP COPY OF CIVIL PROFILE RECEIVED FROM C. BELL 10/13/92

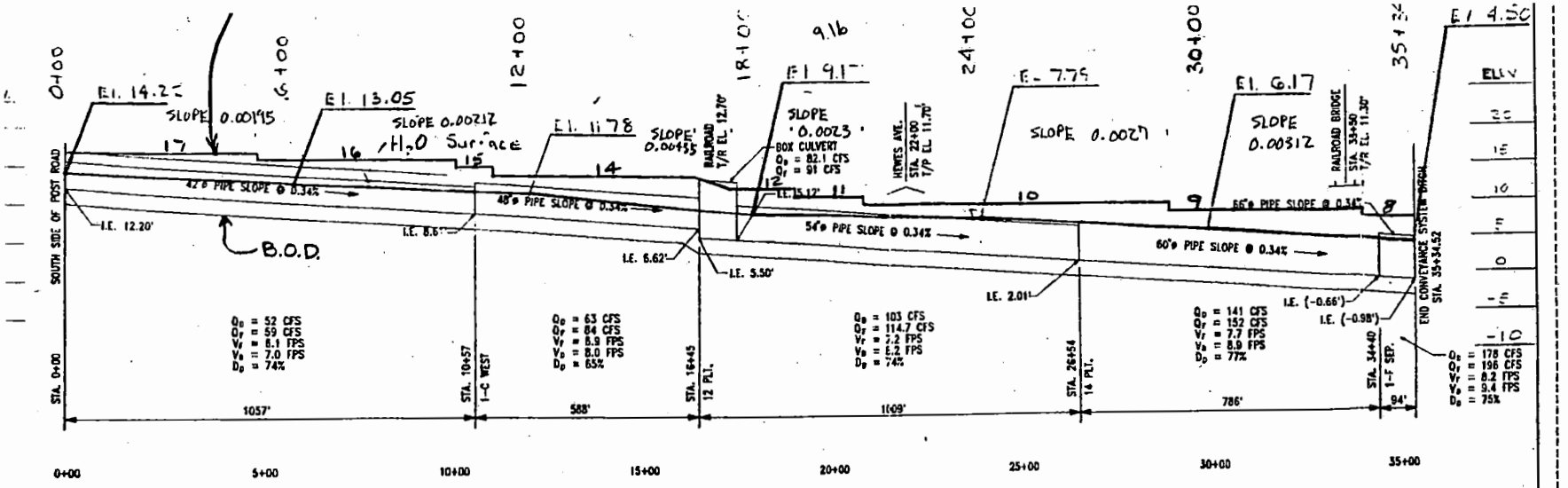

PROFILE
SCALE: HORIZ. 1"=100'-0"
VERT. 1"=5'-0"

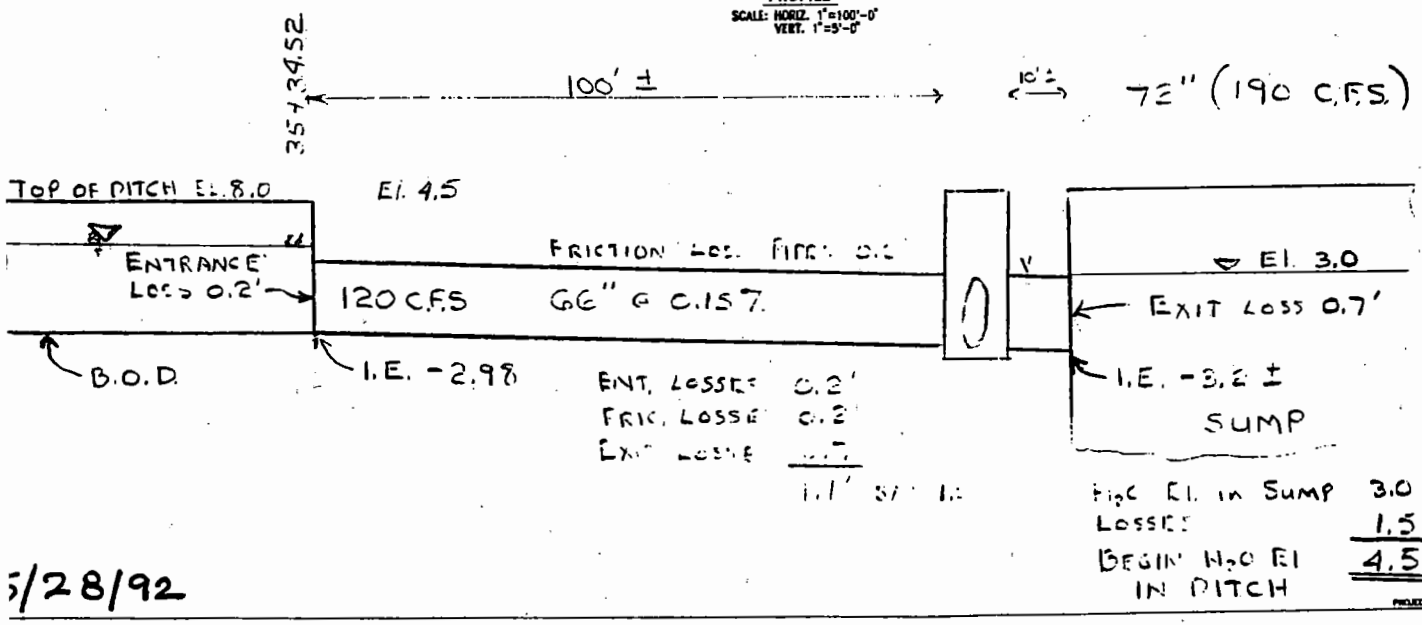

5/28/92

SHOW & BOOT BRADEN

SUN REFINING AND MARKETING COMPANY
A SUBSIDIARY OF SUNOCO INC

SUN REFINING AND MARKETING COMPANY
MARCUS HOOK REFINERY
MARCUS HOOK, DEL. CO., PA.

CIVIL
PLAN & PROFILE
CONVEYANCE SYSTEM

PLANT 0331 MARCUS HOOK, PA

XXXXXX
XXXXXX

SHEET No. 1 OF 1

A

PROJECT: RC-0086

FILE NAME: DFLUMS 5/26/92

RECEIVED 10/13/92
FROM C. BELL.
M. DYE

CLIENT	JOB NUMBER
Sun Oil	RC-0086
SUBJECT: Concrete Trench Design	
BASED ON	DRAWING NUMBER

BY	CHECKED BY	APPROVED BY	DATE
J. Schmohl	R DUNCAN		10/27/92

Compute Axial Load and Moment for Trench Bottom Slab

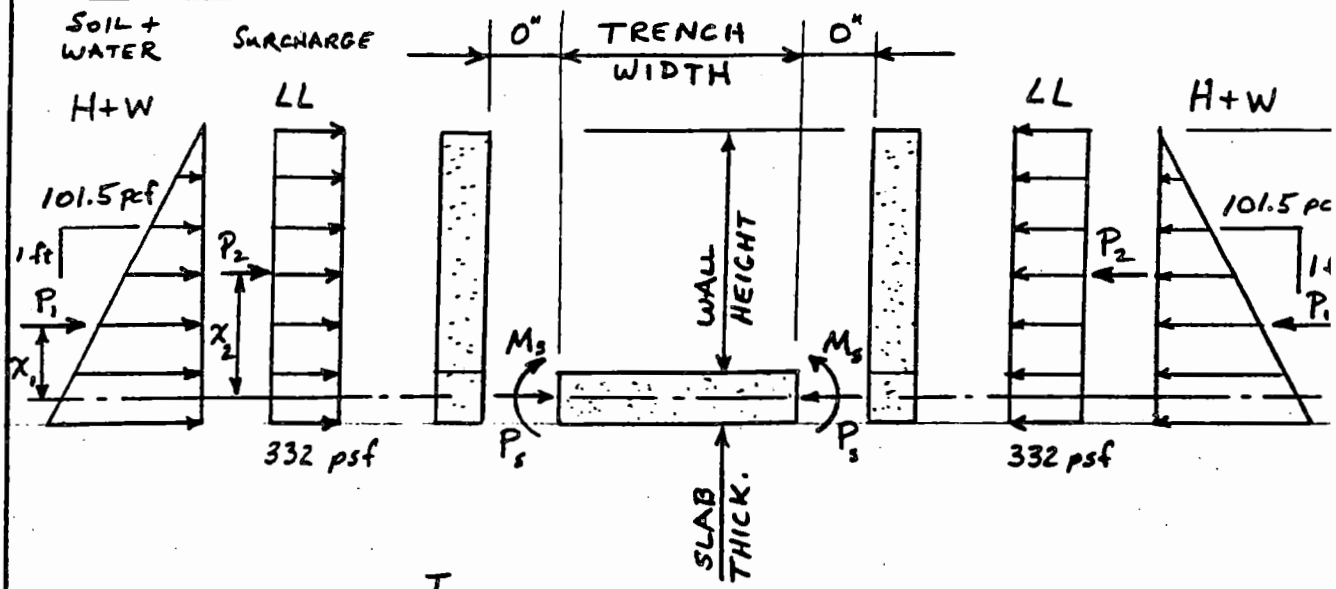

T_w ING. WALL THICKNESS	WALL HEIGHT	TRENCH WIDTH	T_s BOTTOM SLAB THICKNESS	P_1	x_1	M_1	P_2	x_2	M_2	P_s	M_s
2.0	11.2'	10'	2.5' ✓	9.53^k	3.32'	31.6'^{k}	4.55^k	5.6'	25.5'^{k}	14.1^k	57.1''
2.0	11.2'	12'	3.25' ✓	10.60	3.19	33.8	4.80	5.6	26.9	15.4	60.7
2.0	10'	10'	2.25' ✓	7.62	2.96	22.5	4.07	5.0	20.3	11.7	42.9
2.0	10'	12'	3.0' ✓	8.58	2.83	24.3	4.32	5.0	21.6	12.9	45.9
2.0	8'	10'	2.0' ✓	5.08	2.33	11.8	3.32	4.0	13.3	8.4	25.1
2.50'	13.2' ⊗	10'	2.25'								
2.75'	16.4' ⊗	10'	2.5'								

$P_1 = 101.5\ pcf\ (1ft)(D)(D/2) = 50.75\ D^2/1000$

$x_1 = D/3 - T_s/2$

$M_1 = P_1(x_1)$

$P_2 = 332\ psf\ (1ft)(D) = 332\ D/1000$

$x_2 = D/2 - T_s/2$

$P_s = P_1 + P_2$

$M_s = M_1 + M_2$

$P_u = 1.3(1.7)P_s$

$M_u = 1.3(1.7)M_s$

For Strength Design

WALL HEIGHT	BOTTOM SLAB	P_u	M_u
11.2'	2.5'	31.2^k	126.2
11.2'	3.25'	34.0	134.1
10'	2.25'	25.8	94.7
10'	3.0'	28.5	101.4
8'	2.0'	18.6	55.5
13.2'			
16.4'			

CLIENT Sun Oil		JOB NUMBER RC-0086	
SUBJECT Concrete Trench Design			
BASED ON		DRAWING NUMBER	
BY J. Schmohl	CHECKED BY Roy DUNCAN	APPROVED BY	DATE 10/29/92 R

Nominal Axial Load Strength at Balanced Strain Condition

(Ref. Wang & Salmon, p. 418) ACI 318 - 9.3.2.2.(b)

$$P_b = C_c + C_s - T \qquad (13.12.2)$$

where

$$C_c = 0.85 f'_c \beta_1 x_b b \qquad (13.12.3)$$

$$C_s = A'_s (f_y - 0.85 f'_c) \qquad (13.12.5)$$

$$T = A_s f_y \qquad (13.12.4)$$

But $x_b = \dfrac{87 d}{87 + f_y} = \dfrac{87}{87+60} d = 0.5918 d$ (13.12.1)

& $(f_y - 0.85 f'_c) = (60 - 0.85(4.0)] = 56.6$ ksi

So

$$C_c = 0.85(4.0)(0.85)(0.5918 d)(12") = 20.525 d \text{ (ki}$$

$$C_s = 56.6 A'_s$$

$$T = 60 A_s$$

Ref. p.	Wall Height	Bottom Slab	d	A's	As	Cc	Cs	T	Pb
25	11.2'	2.5'	26.5"	0.44 in²	1.20 in²	544 +	25	- 72	= 49
27	11.2'	3.25'	35.5"	0.44	1.20	729 +	25	- 72	= 68
47	10'	2.25'	23.5"	0.44	1.05	482 +	25	- 63	= 44
49	10'	3.0'	32.5"	0.44	1.05	667 +	25	- 63	= 629
37	8'	2.0'	20.5"	0.44	0.88	421 +	25	- 53	= 39

CLIENT Sun Oil		JOB NUMBER RC-0086	
SUBJECT Concrete Trench Design — Preliminary —			
BASED ON ACI Methods		DRAWING NUMBER	
BY JGS	CHECKED BY MED 10/7/92	APPROVED BY	DATE 10/6/92

CONTENTS:

1. Preliminary Conc. Trench Design by ACI 318-89 Strength Design Method — Pages N1 - N6

2. Preliminary Trench Design by ACI 350R-89 Working Stress Method — pages N7 - N9

3. Preliminary Rebar Layout for 11' Wall Height page N10

4. Preliminary Trench Design by ACI 350R-89 Strength Design Method — pages N11 - N18

COMMENTS & CONCLUSIONS:

1. ACI 318-89 Strength Design Method and ACI 350R-8 Working Stress Method give comparable results (#7 Dowe @ 6" Spacing) due to requirements for crack control (Ref. comments on page 7 of working stress calcs.).

2. ACI 350R-89 requires only about 1/2 as many calculations to get results compared to ACI 318 strength method.

3. ACI 350 strength design method requires more steel (#8@7") and more calculations than ACI 318 strength design.

4. Final Design will therefore be based on ACI 350 Working Stress Method. At-Rest Soil pressures will be used and wall heights will correspond to increments which better represent the actual conditions (probably 8'-10'-13' & 16' heig

CLIENT Sun Oil		JOB NUMBER RC-0086	
SUBJECT Concrete Trench Design - Preliminary -			
BASED ON ACI 318-89		DRAWING NUMBER	
BY JGS	CHECKED BY MED 10/7/92	APPROVED BY	DATE 10/1/92

Design of Trench based on ACI 318-89 using the Strength Design Method.

The majority of the soil borings along the Conveyance Trench (Borings B-37-1 thru B-37-19) indicate that the upper stratum of soil is type "F loose" fill, generally underlain by type "F dense" fill.

The method of trench construction will be generally as follows:

1. Drive sheet pile along both sides of the area to be excavated for the trench.
2. Excavate to the bottom of the concrete slab and remove soil unsuitable for support. Unsuitable soils, according to the soil report, are types "F loose", "F dense" and type "1B". Brace sheet piles as may be necessary during excavation and bottom slab construction (sheet pile analysis is separate from this analysis).
3. Construct bottom slab and cure concrete.
4. Remove sheet pile bracing and construct concrete walls of trench, leaving sheet piles in place.

Assume wall heights are as shown on sheet 1A which is based on the Preliminary Profile (top of ditch bottom slab being 2'-0" below the pipe invert).

Soil properties for the various strata obtained from the Soil report are shown in Appendix p. 1B. Per discussion with Roy Duncan, use active pressure coefficient for walls of the trench, as strength of sheet piles will be neglected in design of the concrete trench. Note that At-Rest Pressure of "F dense" is 104 pcf vs. 98 pcf Active Pressure for "F loose".

Brown & Root USA, Inc.

Calculation Worksheet Page: N1A

Client: SUN OIL Job No.: RC-0086

Subject: ELEVATION OF DREDGE LINE & FREE HEIGHT OF SHEETPILE

Based On: PRELIMINARY PROFILE Dwg. No.:

Des. By: MED Ck'd By: R DUNCAN App. By: Date: 7/28/92

Pipe Slope = 0.0034
Pedestal Height = 2.00 (feet)
Base Slab Thickness (Sta. 0 to Sta. 2450) = 1.75 (feet)
Base Slab Thickness (Sta. 2450 to Sta. 3534) = 2.83 (feet)

Boring #	Station	Pipe Inv.	B.O.C.	T.O.W.	Wall Ht.	Strat	Drdge Lne	H
B-37-1	0	12.20	8.45	16	5.80	13.9	8.45	7.55
B-37-2	220	11.45	7.70	16	6.55	2.2	2.20	13.80
B-37-3	450	10.67	6.92	16	7.33	3.8	3.80	12.20
B-37-4	600	10.16	6.41	16	7.84	7.2	6.41	9.59
B-37-5	800	9.48	5.73	18	10.52	2.2	2.20	15.80
B-37-6	1000	8.80	5.05	18	→ 11.20	4.5	4.50	13.50
B-37-7	1200	8.12	4.37	13	6.88	4.7	4.37	8.63
B-37-8	1525	7.01	3.26	13	7.99	2.0	2.00	11.00
B-37-9	1610	STEP 6.73	2.98	11.5	6.77	-0.5	-0.50	12.00
B-37-10	1730	5.21	1.46	11.5	8.29	4.1	1.46	10.04
B-37-11	1900	4.63	0.88	11.5	8.87	-1.2	-1.20	12.70
B-37-12	2150	3.78	0.03	10.5	8.72	-0.3	-0.30	10.80
B-37-13	2250	3.44	-0.31	10	8.56	-2.5	-2.50	12.50
B-37-14	2500	2.59	-2.24	9.5	8.91	-2.8	-2.80	12.30
B-37-15	2700	1.85	-2.98	9	9.15	2.3	-2.98	11.98
B-37-16	2900	1.17	-3.66	9	9.83	-0.2	-3.66	12.66
B-37-17	3075	0.58	-4.25	8	9.42	1.0	-4.25	12.25
B-37-18	3300	-0.19	-5.02	7.5	9.69	-1.5	-5.02	12.52
B-37-19	3500	-0.86	-5.69	7.5	10.36	-4.5	-5.69	13.19

Pipe/Structure Transition

Note: Checked with Nano Daroowala & Curtis Bell on pipe invert elevations 9/24/92. They said these elevations are correct, and the bottom of the ditch (T.O.C.) is 2'-0" below the pipe invert elevation.

JGS

CLIENT	Sun Oil	JOB NUMBER	RC-0086
SUBJECT	Concrete Trench Design - Preliminary -		
BASED ON	ACI 318-89	DRAWING NUMBER	
BY JGS	CHECKED BY MED 10/7/92	APPROVED BY	DATE 10/1/92

Geometry based on Trench for Walker's Run - East Wall
(11'± Max. Wall Heigh

Design Criteria

4,000 psi Concrete
60,000 psi Rebar
400 psf surcharge load for future maintenance equipme
Soils: Active Pressure Coefficient = 0.83
Wet Unit Wt. = 105 pcf
Buoyed Unit Wt. = 43 pcf

NOTE: FINAL DESIGN WILL USE AT-REST PRESSURE COEFFICIENT. JGS 10,

Wall Loads

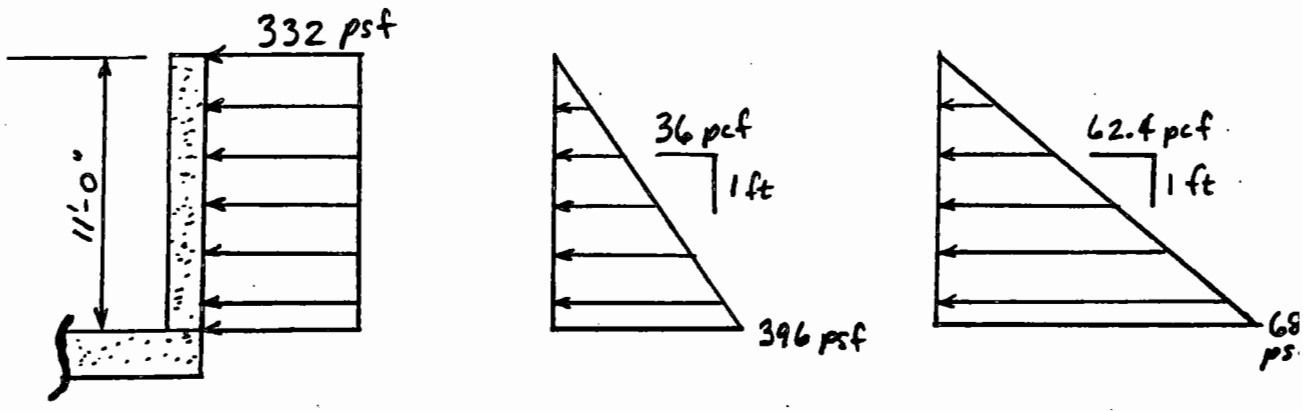

Surcharge
400 psf (0.83)
= 332 psf

Buoyed Soil
43 pcf (0.83)
= 36 pcf

Water
62.4 pcf

Resultants on Wall

Surcharge - (L) = 332 psf (11') = 3,652 lb = 3.65 k @ 5.5' above base
Buoyed Soil (H) = ½(396)(11') = 2,178 lb = 2.18 k @ 3.67' " "
Water (F) = ½(686)(11') = 3,773 lb = 3.77 k @ 3.67' " "

Try wall 1'-9" thick, conc. cover (ext. face) = 3", "d" = 17.5" ±

CLIENT Sun Oil		JOB NUMBER RC-0086	
SUBJECT Concrete Trench Design		- Preliminary -	
BASED ON ACI 318		DRAWING NUMBER	
BY JGS	CHECKED BY MED 10/7/92	APPROVED BY	DATE 10/1/92

Required Strength (ACI 9.2.4 & 9.2.5)

$$U = 1.4D + 1.7L + 1.7H + 1.4F$$

Req'd Shear Strength @ Base of Wall

$$V_u = 1.7(3.65^k) + 1.7(2.18^k) + 1.4(3.77^k) = 15.2^k$$

Shear Strength Provided by Concrete

$$V_c = 2\sqrt{f'_c}\, b_w d = 2\sqrt{\frac{4000}{1000}}(12")(17.5") = 26.6^k \text{ (ACI 11.}$$

Nominal Shear Strength (ACI 11.1.1)

$$V_n = V_c + V_s = 26.6^k + 0^k = 26.6^k$$

Code Requirement for Shear Strength (ACI 11.1.1)

$V_u \leq \phi V_n$ where $\phi = 0.85$ for Shear (ACI 9.3

$V_u = 15.2^k \leq 0.85(26.6^k) = 22.6^k$ Satisfactory

Shear Friction Reinforcing: (ACI 11.7.4 & R 11.7.4.1)

$$A_{vf} = \frac{V_u}{\phi f_y \mu}$$

where $\mu = 1.0\lambda$ for joints intentionally roughened per ACI 11.7.9 ($\lambda = 1.0$) ACI 11.7.4.3

$$A_{vf} = \frac{15.2^k}{0.85(60^{ksi})(1.0)} = \underline{\underline{0.30 in^2}}$$

Check Limit of Shear Strength per ACI 11.7.5:

$$V_n \leq 0.2 f'_c A_c = 0.2(4000)A_c = 800 A_c = 800(12")(17.5")$$
$$= 168{,}000 \text{ Lb} = 168.0^k > 26.6^k \text{ Above OK}$$

CLIENT Sun Oil		JOB NUMBER RC-0086	
SUBJECT Concrete Trench Design		— Preliminary —	
BASED ON ACI 318		DRAWING NUMBER	
BY JGS	CHECKED BY MED 10/7/92	APPROVED BY	DATE 10/1/92

Flexure (Ref. ACI 14.1.2)

Req'd Flexural Strength (Ref. Resultants on p.2 & Eq. on top p.3)

$$M_u = 1.7(3.65^k)(5.5') + 1.7(2.18^k)(3.67') + 1.4(3.77^k)(3.67') = 67.1'^k$$

Nominal Flexural Strength (ACI 9.3.1)

$$M_n = M_u/\phi = 67.1'^k/0.90 = 74.6'^k$$

(ACI 9.3.2.1

Design Procedure – Ref "Reinforced Concrete Design" by Wang & Salmon, 2nd Ed, p. 45 f.f.

Compute the Coefficient of Resistance

$$R_n = \frac{M_n}{bd^2} = \frac{74.6'^k(12''/')(1000^{lb}/k)}{12''(17.5'')^2} = 243.6 \text{ psi}$$

$$m = \frac{f_y}{0.85 f'_c} = \frac{60}{0.85(4)} = 17.65$$

$$\rho_{req'd} = \frac{1}{m}\left(1 - \sqrt{1 - \frac{2mR_n}{f_y}}\right)$$

$$= \frac{1}{17.65}\left(1 - \sqrt{1 - \frac{2(17.65)(243.6)}{60{,}000}}\right) = 0.0042$$

Ext. Dowels @ Base of wall

A_s req'd for Flexure $= \rho_{req'd}\, bd = 0.0042(12)(17.5) = \underline{0.88}$

See Ne
Page

CLIENT Sun Oil		JOB NUMBER RC-0086	
SUBJECT Concrete Trench Design		- Preliminary -	
BASED ON ACI 318		DRAWING NUMBER	
BY JGS	CHECKED BY MED 10/7/92	APPROVED BY	DATE 10/1/92

Check Usable Moment Strength (with $A_s = 0.88\ in^2$)

$$T = A_s f_y = 0.88(60) = 52.8^k$$

For Equilibrium

$$T = C = 0.85 f'_c b a = 0.85(4)(12)(a) = 40.8\,a$$

$$\text{So} \quad a = \frac{T}{40.8} = \frac{52.8^k}{40.8} = 1.29''$$

Usable Moment Strength

$$M_u = \phi M_n = 0.90\,T\left(d - \frac{a}{2}\right) = 0.90\left(\frac{52.8^k}{12'}\right)\left[17.5 - \frac{1.29}{2}\right]$$

$$= 66.7'^k < 67.1'^k \qquad \text{Use } A_s = 0.89\ in^2$$

$$\rightarrow 67.5'^k \text{ OK}$$

Note: Flexure controls design over Shear Friction $A_s = 0.89$ vs. $A_{vf} = 0.30\ in^2$ (Ref ACI 318, R.11.7.7)

Rev. 1 10/5

Try #7@8" $\Rightarrow A_s = 0.90\ in^2$

Check Minimum Reinforcing: (ACI 10.5.3 & 7.12)

$$A_{s\,min} = 0.0018\,bh = 0.0018(12'')(21'') = 0.45\ in^2 \text{ OK}$$

Check Distribution of Flexural Reinforcement for Crack Control

ACI 10.6.4 $\qquad Z = f_s \sqrt[3]{d_c A}$ $\qquad$ (Eq 10-4)

Assume #7 Bars, - 7/8" ϕ →

Where $f_s = 0.60 f_y = 36^{ksi}$; d_c = Clear Cover + ½ bar ϕ = 3.4

$$A = \frac{2 d_c \cdot S}{\text{No. Bars}} = \frac{6.88''(8'')}{1} = 55.0\ in^2$$

$$Z = 36\sqrt[3]{3.44(55.0)} = 258 > 145 \text{ Allowable for Ext. Expo}$$

No Good!

CLIENT	Sun Oil	JOB NUMBER	RC-0086
SUBJECT	Concrete Trench Design		- Preliminary -
BASED ON	ACI 318	DRAWING NUMBER	
BY JGS	CHECKED BY MED 10/7/92	APPROVED BY	DATE 10/1/92

Alternative Check for Crack Control - Compute Actual "f_s"

Note: The value of "d_c" on the previous sheet was based on 3" clear from face of conc. to reinf. steel. There is apparently no provision in ACI 318 to account for concrete placed in the sheet pile corrugations. It is felt that the sheet pile and additional concrete will enhance corrosion protection and watertightness.

Service Load Moment

$$M_s = 3.65(5.5) + 2.18(3.67) + 3.77(3.67) = 41.9'^K$$

$$f_s \doteq \overset{0.56}{\left(\frac{41.9'^K}{74.6'^K}\right)} f_y$$

REV. 1 10/5/92

$$= 0.56 f_y = 0.56(60) = 33.6^{ksi} \text{ vs. } 36^{ksi}$$

originally assumed (Not Much Change)

Try More Reinf. Steel for Crack Control

Try #7@6" ⇒ 1.20 in²

$$f_s = \frac{M}{A_s j d} = \frac{41.9'^K(12''/')}{1.20 in^2(7/8)(17.5")} = 27.4^{ksi}$$

$$d_c = \text{Clear Cover} + \tfrac{1}{2}\text{ Bar } \phi = 3.44"$$

$$A = \frac{2 d_c \cdot S}{\text{No. Bars}} = \frac{6.88(6)}{1} = 41.3 in^2$$

$$Z = f_s \sqrt[3]{d_c \cdot A} = 27.4 \cdot \sqrt[3]{3.44(41.3)} = \underline{143} < 145 \text{ OK}$$

Use #7@6" ⊛ NOT FINAL DESIGN SEE NOTE ON P. 2 JGS.

CLIENT Sun Oil		JOB NUMBER RC-0086	
SUBJECT Concrete Trench Design		— Preliminary —	
BASED ON ACI 350 Working Stress		DRAWING NUMBER	
BY JGS	CHECKED BY MED 10/7/92	APPROVED BY	DATE 10/1/92

Due to the fact that the strength reinforcement calculat by ACI 318-89 had to be increased about 35% to meet crack control requirements of Section 10.6.4, try design by ACI 350R-89 working stress methods, Section 2.6.7

Note that ACI 350 applies to Environmental Engineering Concrete structures where leakage into potable water or out of contaminated water facilities must be avoided to protect the public health. Design by this method was avoided initially since the conveyance trench is for storm water conveyance, and intuitively design by working stress methods was expected to give a larger reinforcing steel requirement than strength design methods. However, based on the preceeding analysis by ACI 318 including crack control requirements, the former assumption may not hold true.

One point which is covered in ACI 350, section 2.6.6 which may be to our advantage is stated "Z values were established for cover equal to or less than 2 in. (51 mm) and should be based on this value when the cover exceed 2 in. Additional cover may be regarded as added protection." This will take care of the case of the concre included in the corrugations of the sheet pile (which is no addressed in ACI 318) and may help in meeting requirements for "Z" values when the reinforcing has 3" or more of concrete cover.

⟹ As seen from the results of calculations on pages 8 & 9, ACI 350R-89 working stress design gives the same requirements for exterior dowels in the wall (#7@6") as obtained by ACI 318-89 strength design, except with considerably less calculation required for the working stress method.

CLIENT Sun Oil		JOB NUMBER RC-0086	
SUBJECT Concrete Trench Design		— Preliminary —	
BASED ON ACI 350 Working Stress		DRAWING NUMBER	
BY JGS	CHECKED BY MED 10/7/92	APPROVED BY	DATE 10/2/92

Resultants @ Base of Wall (Ref. Diagrams on p. 2)

Surcharge (L) = 332 psf (11')(1') = 3652 lb @ 5.5' above base
Buoyed Soil (H) = ½(396)(11')(1') = 2178 @ 3.67'
Water (F) = ½(686)(11')(1') = 3773 @ 3.67

Check Shear @ Base of Wall - Try 1'-9" wall, say d = 17.5"

$$V = 3.65^k + 2.18^k + 3.77^k = 9.60^k$$

$$v = \frac{V}{bwd} = \frac{9.60^k}{12''(17.5'')} = 0.046^{ksi} = 46 \text{ psi}$$ ACI A.7

Allowable $v_c = 1.1\sqrt{f'_c} = 1.1\sqrt{4000} = 70$ psi (OK) ACI A.3. & A.7.

Per ACI A.7.5.5.1 (c), shear reinf. not req'd since "beam" depth not greater than one-half the width of web (= ½ len of wall).

Flexure: ACI 318 - A.3.1 (a) $f_c = 0.45 f'_c$ & A.3.2(b) $f_s = 24{,}00$
(See also RA.5)

$$M = 3.65^k(5.5') + 2.18^k(3.67') + 3.77^k(3.67') = 41.9'^k$$

$$\text{Req'd "d"} = \sqrt{\frac{2M}{f_c k j b}} = \sqrt{\frac{2(41.9)(12)}{1.80(3/8)(7/8)(12)}} = 11.9'' < 17.5'' \pm \text{pr}$$

$$A_s = \frac{M}{f_s j d} = \frac{41.9'^k(12''/')}{24^{ksi}(7/8)(17.5'')} = 1.37 \text{ in}^2$$

Try #8@7" ⇒ $A_s = 1.35 \text{ in}^2$

$$f_s = \frac{M}{A_s j d} = \frac{41.9(12)}{1.35(7/8)(17.5)} = 24.3^{ksi} < 26.0^{ksi} \text{ for } z = 11$$

from ACI 350, Fig. 2.6.7

#8@7" Looks Good - See #7@6" Next page

CLIENT Sun Oil		JOB NUMBER RC-0086	
SUBJECT Concrete Trench Design		— Preliminary —	
BASED ON ACI 350 Working Stress		DRAWING NUMBER	
BY JGS	CHECKED BY MED 10/7/92	APPROVED BY	DATE 10/2/92

Check Reinf. Req'd for Shear Friction (ACI 318 - A.7.6)

ACI 318 - 11.7.5 $V_n \leq 0.2 f'_c A_c = 800 A_c$

ACI 318 - A.7.6 $V_n \leq 55\% (800 A_c) = 440 A_c$
$= 440 (12")(17.5") = 92.4^k$ OK

ACI 318 - R.11.7.4.1 & A.7.6

$$A_{vf} = \frac{V_u}{\phi f_y \mu} = \frac{9.6^k}{1.0(24^{ksi})(1.0)} = 0.40 \text{ in}^2/\text{ft}$$

A.2.1 ⇒ $\phi = 1.0$ A.3.2 ⊛

Note: Shear Friction requires less reinf. than flexure, so flexure controls design. (Ref ACI 318, R11.7.7) REV. 10/5

Try #7 @ 6" ⇒ $A_s = 1.20 \text{ in}^2$

$$f_s = \frac{M}{A_s j d} = \frac{41.9^{'k}(12"/')}{1.20(7/8)(17.5)} = 27.4^{ksi} \simeq$$ Allowable for $Z = 115$ from ACI 350, Fig. 2.6.7(b)

Try #9 @ 8" ⇒ $A_s = 1.50 \text{ in}^2$

$$f_s = \frac{41.9(12)}{1.50(7/8)(17.4)} = 22.0^{ksi} < 23.3^{ksi}$$ Allowable for $Z = 115$ from ACI 350, Fig. 2.6.7(c)

Use #7 @ 6" as this is the more efficient design.

NOT FINAL DESIGN - SEE NOTE ON P.2 JGS 10/6/92

⊛ This max. stress level does not account for favorable bar spacing. ACI 350, Fig 2.6.7(b) & Table 2.6.7(b) shows max. allowable stress ($Z = 115$) @ 22 ksi for #8 bars @ 12" spacing which is less than the nominal 24 ksi.

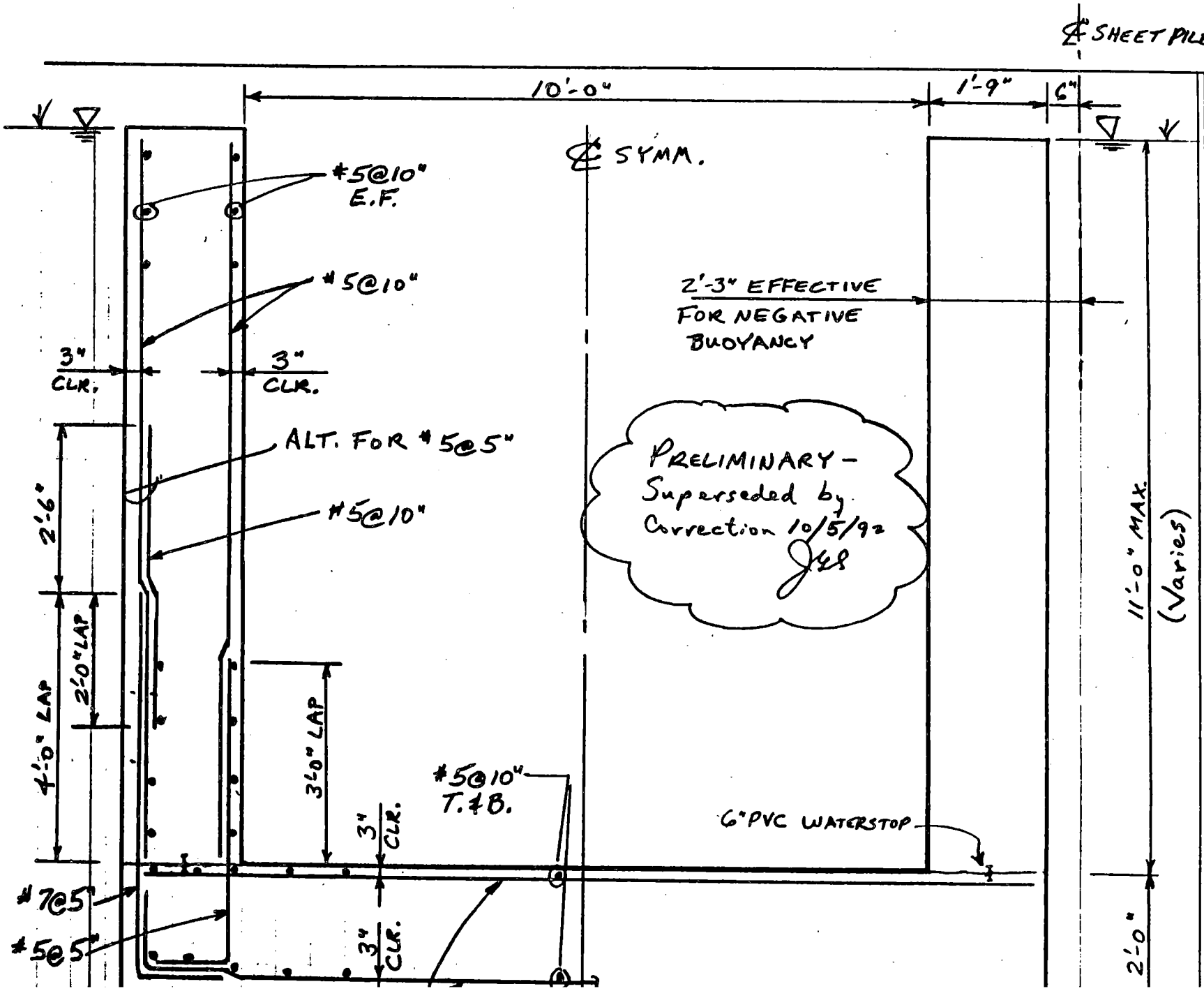

CLIENT: Sun Oil			JOB NUMBER: RC-0086
SUBJECT: Concrete Trench Design			DRAWING NUMBER: - Preliminary -
BY: JGS	CHECKED BY: R. Duncan	APPROVED BY	DATE: 10-1-92
BASED ON			

CLIENT		JOB NUMBER	
SUN OIL		RC-0086	
SUBJECT CONCRETE TRENCH DESIGN		— Preliminary —	
BASED ON ACI 350-89		DRAWING NUMBER	
BY MED	CHECKED BY JLL 10/6/92	APPROVED BY	DATE 10/1/92

DESIGN THE TRENCH BASED UPON ACI 350R-89 STRENGTH DESIGN

MINIMUM COVER FOR WALLS EXPOSED TO EARTH, WATER, SEWAGE, WEATHER, OR IN CONTACT WITH THE GROUND = 2 INCHES (TABLE 2.5 MINIMUM CONCRETE COVER FOR REINF., SECT 2.5 A

MINIMUM COVER FOR FOOTINGS AND BASE SLABS @ UNFORMED SURFACES AND BOTTOMS IN CONTACT WITH EARTH = 3 INCHES (SAME REFERENCE AS ABOVE)

ULTIMATE STRENGTH DESIGN METHOD FOR ENVIRONMENTAL CONCRETE STRUCTURES REQUIRES SOME CHANGES IN LOAD FACTORS. THE CHANGES ARE DESCRIBED IN SECTION 2.6.5 OF ACI 350-89.

LATERAL EARTH PRESSURE (H): LOAD FACTOR 1.7
LATERAL LIQUID PRESSURE (F): LOAD FACTOR 1.7

FOR FLEXURAL REINFORCEMENT, THE FACTORED LOAD COMBINATIONS FOR TOTAL FACTORED DESIGN LOAD, U, SHOULD BE INCREAS TO 1.3(U). (SECT. 2.6.5 (a) ACI 350-89)

FOR REINFORCEMENT IN DIRECT TENSION, THE FACTORED LOAD COMBINATIONS FOR TOTAL FACTORED DESIGN LOAD, U, SHOULD BE INCREASED TO 1.65 (U). (SECT 2.6.5 (b) ACI 350-89

"THE REQUIRED DESIGN STRENGTH FOR REINFORCEMENT IN DIAGONA TENSION (SHEAR) SHOULD BE CALCULATED BY APPLYING A SANITARY DURABILITY COEFFICIENT OF 1.3 TO THE EXCESS SHEAR. EXCESS SHEAR IS DEFINED AS THE DIFFERENCE BETWEEN THE FACTORED SHEAR FORCE AT THE SECTION, V_u, AND THE SHEAR STRENGTH PROVIDED BY THE CONCRETE, ϕV_c. THUS $\phi V_s \geq 1.3(V_u - \phi V_c)$,

CLIENT		JOB NUMBER	
SUN OIL		RC-0086	
SUBJECT CONCRETE TRENCH DESIGN		— Preliminary —	
BASED ON ACI 350-89		DRAWING NUMBER	
BY MEG	CHECKED BY JGL	APPROVED BY	DATE 10/2/92

WHERE ϕV_s IS THE DESIGN CAPACITY OF THE SHEAR REINFORCEMENT." (SECTION 2.6.5 (c) ACI 350-89)

FOR FLEXURAL REINFORCEMENT LOCATED IN ONE LAYER, THE QUANTITY Z SHOULD NOT EXCEED 115 k/in. Z VALUES WERE ESTABLISHED FOR COVER EQUAL TO OR LESS THAN 2 INCHES AND SHOULD BE BASED ON THIS VALUE WHEN THE COVER EXCEEDS 2 IN. ADDITIONAL COVER MAY BE REGARDED AS ADDED PROTECTION (SECT 2.6.6 ACI 350-89)

SPLICES SHOULD CONFORM TO ACI 318 (SECT 2.7 REINF. SPLICES ACI

CLIENT		JOB NUMBER	
SUN OIL		RC-0026	
SUBJECT	CONCRETE TRENCH DESIGN		— Preliminary —
BASED ON	ACI 350-89	DRAWING NUMBER	
BY MED	CHECKED BY JGS	APPROVED BY	DATE 10/2/92

FROM STA 0+00 TO STA 24+50, THE TRENCH IS MOSTLY 10 ft WIDE AND FOR THE MOST PART THE WALL HEIGHTS ARE 11 ft HIGH OR LESS. THEREFORE, ANALYZE AN 11 ft HIGH WALL.

THE MAJORITY OF THE SOIL BORINGS (B-37-1 THRU B-37-19) INDICATE THAT THE UPPER STRATUM OF SOIL IS LOOSE FILL. THUS, THE LATERAL SOIL PRESSURE DIAGRAM WILL BE BASED ON STRATUM "F" LOOSE FILL WHICH HAS THE FOLLOWING SOIL PROPERTIES. (γ = 105 pcf, γ_b = 43 pcf, k_a = 0.83) TABLE 6.0, SOILS REPORT

CONCRETE = 4,000 psi
REBAR = 60,000 psi
SURCHARGE = 400 psf

* ASSUME VERY SMALL OR NO VERTICAL LOADING ON THE WALL OF THE CONVEYANCE TRENCH. (NEGLECT COMPRESSION EFFEC

LATERAL LOADS

BECAUSE THE GROUNDWATER TABLE IS VERY HIGH, PLACE THE WATER TABLE AT THE TOP OF THE WALL.

SOIL - $\gamma_b k_a$ = 43 pcf (0.83) = 36 pcf ← NOTE: FINAL DES
SURCHARGE = 400 psf (0.83) = 332 psf WILL USE AT-REST
WATER = 62.4 pcf PRESSURE COEFFICIE

JGS 10/6/92

CLIENT		JOB NUMBER	
SUN OIL		RC-0026	
SUBJECT CONCRETE TRENCH DESIGN			- Preliminary -
BASED ON ACI 350-89		DRAWING NUMBER	
BY MED	CHECKED BY JGS	APPROVED BY	DATE 10/2/92

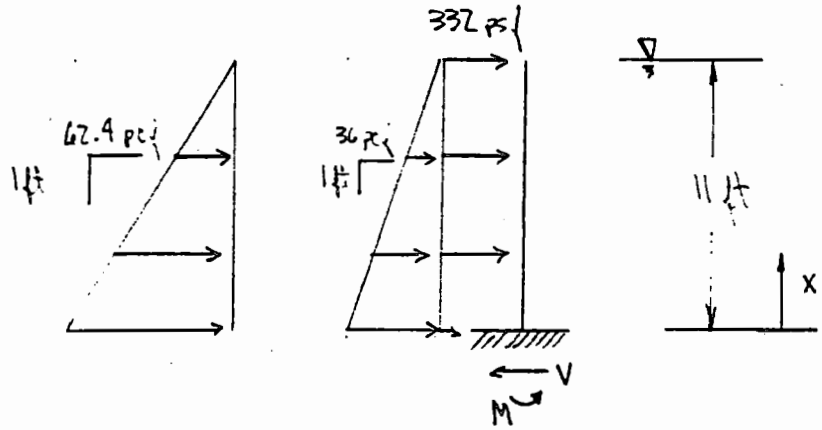

RESULTANTS (PER FOOT OF WALL)

SOIL - $1.3(1.7)(\frac{1}{2})(36\ pcf)(11\ ft)^2 = 4{,}813^{\#}$ @ 3.67 ft

SURCHARGE - $1.3(1.7)(332\ psf)(11\ ft) = 8{,}071^{\#}$ @ 5.50 ft

WATER - $1.3(1.7)(\frac{1}{2})(62.4\ pcf)(11\ ft)^2 = 8{,}343^{\#}$ @ 3.67 ft

DESIGN WALL THICKNESS BASED ON SHEAR

I WILL NOT USE ANY SHEAR REINFORCEMENT IN THE WALL. THEREFORE, $\phi V_s = 0$

$\phi V_s \geq 1.3(V_u - \phi V_c)$ $\phi = 0.85$ ACI 318 9.3.2.3

$0 \geq 1.3(V_u - \phi V_c)$

$\phi V_c \geq V_u$ $\phi V_c = 0.85(2)(\sqrt{f'_c})(b)(d)$ (ACI 11.3.1.1 E

$V_u = 4.81^k + 8.07^k + 8.34^k = 21.22^k$ COMBINE EQ (11-1), (1 (11-3)

$0.85(2)(\sqrt{4{,}000})(12)(d)/1000 \geq 21.22^k$

$d \geq 16.4''$

CLIENT		JOB NUMBER	
SUN OIL		RC-0096	
SUBJECT CONCRETE TRENCH DESIGN			- Preliminary -
BASED ON ACI 318-89		DRAWING NUMBER	
BY MED	CHECKED BY JGS	APPROVED BY	DATE 10/2/92

THICKNESS OF WALL ≥ 16.4" + 3" (COVER) + 1/2" (ASSUME #8 BAR) = 19.9"

USE WALL THICKNESS = 1'-9"

FLEXURE

$M_u = 4.81^k(3.67\,ft) + 8.07^k(5.50\,ft) + 8.34^k(3.67\,ft) = 92.65\ ft\cdot k$

$M_n = M_u/\phi = 92.65/0.9 = 102.94\ ft\cdot k$ $\phi = 0.90$ ACI 9.3.2.1

$R_n = M_n/bd^2$ ("REINF. CONCRETE DESIGN", 4th ed, WANG & SALMON, 3.8.4

ASSUME #8 bar ∴ $d = 21" - 3"(\text{COVER}) - 1/2"(\text{BAR}) = 17.5"$

$R_n = 102.94(12{,}000)/[12(17.5)^2] = 336.13$ psi

$m = f_y/0.85f'_c$ (SAME REFERENCE AND PAGE AS ABOVE)

$m = 60/[0.85(4)] = 17.65$

$\rho_{REQ'D} = 1/m\left(1 - \sqrt{1 - \frac{2mR_n}{f_y}}\right)$ (SAME REFERENCE AND PAGE AS ABOVE)

$\rho_{REQ'D} = 1/17.65\left(1 - \sqrt{1 - \frac{2(17.65)(336.13)}{60{,}000}}\right)$

$\rho_{REQ'D} = 0.0059$

$\rho_b = \frac{0.85\beta_1 f'_c}{f_y}\left(\frac{87{,}000}{87{,}000 + f_y}\right)$ (SAME AS ABOVE)

CLIENT	JOB NUMBER
SUN OIL	RC-0086
SUBJECT: CONCRETE TRENCH DESIGN	— Preliminary —
BASED ON: ACI 318-89	DRAWING NUMBER

BY	CHECKED BY	APPROVED BY	DATE
MED	JGS		10/2/92

$f'_c \le 4{,}000$ psi $\qquad \beta_1 = 0.85$

$$\rho_b = \frac{(0.85)^2(4{,}000)}{60{,}000}\left(\frac{87{,}000}{87{,}000 + 60{,}000}\right) = 0.0285$$

$\rho_{max} = 0.75\,\rho_b = 0.0214$

$\rho_{min} = 0.0018 \quad (14.1.2 \rightarrow 10.5.3 \rightarrow 7.12 \;\&\; 14.3.4)$

$A_{s\,REQ'D} = 0.0059(12)(17.5) = 1.24 \text{ in}^2$

SHEAR FRICTION

ACI 11.7

$V_n = A_{vf} f_y \mu \qquad$ ACI 11.7.4.1 EQ. (11-26)

USE $\mu = 1.0\lambda$ ACI 11.7.4.3 AND NOTE ON DWG THAT THE INTERFACE MUST BE INTENTIONALLY ROUGHENED 1/4"

$\lambda = 1.0$ FOR NORMAL WEIGHT CONCRETE (ACI 11.7.4.3)

SHEAR @ INTERFACE $= V_u = 21.22^k$ (P. 4 CALCS)

$\phi V_n \ge V_u \qquad$ ACI 11.1.1 (EQ 11-1) $\qquad V_u = 21.22^k$ (P.4 CALCS)

$\phi = 0.85$ (P. 4 CALCS)

$0.85(A_{vf})(60 \text{ ksi})(1.0)(1.0) \ge 21.22^k \qquad$ ACI R11.7.4.1 ~ EQ (11-26)

JGS

$A_{vf} \ge 0.42 \text{ in}^2$

CLIENT		JOB NUMBER	
SUN OIL		RC-0086	
SUBJECT CONCRETE TRENCH DESIGN		- Preliminary -	
BASED ON ACI 350-89		DRAWING NUMBER	
BY MEL	CHECKED BY JEB	APPROVED BY	DATE 10/5/92 REV

CHECK LIMIT OF SHEAR STRENGTH ACI 11.7.5

$V_n \leq 0.2 f'_c A_c = 0.2(4{,}000) A_c = 800 A_c = 800(12'')(17.5'') = 168{,}000^{\#}$

$V_n = V_c + V_s = 2\sqrt{4{,}000}(12'')(17.5'') = 26{,}563^{\#}$

$26{,}563^{\#} < 168{,}000^{\#}$ (ok)

AREA OF STEEL REQUIRED

$A_{vf} \geq 0.42\ in^2$ (P. 6 CALCS) $A_{s\,REQ'D}$ FOR FLEXURE $= 1.24\ in^2$

FLEXURE CONTROLS DESIGN OVER SHEAR FRICTION (ACI 318 R 11.7.7)

#8 @ 7" $A_s = 1.35\ in^2$

CHECK REINFORCEMENT FOR CRACK CONTROL

ACI 10.6.4 $Z = f_s \sqrt[3]{d_c A}$ WHERE:

$f_s = 0.60 f_y$ AND d_c = Clear Cover + ½ bar Ø

$f_s = 0.60(60\ ksi) = 36\ ksi$

$d_c = 2'' + \frac{1}{2}(1'') = 2.5''$ (SEE SECT 2.6.6 ACI 350-89)

$A = \frac{2 d_c \cdot s}{\text{No. BARS}} = \frac{2(2.5'')(7.0'')}{1} = 35.0\ in^2$

$Z = 36\sqrt[3]{2.5(35.0)} = 160 > 115$ (SEE SECT 2.6.6 ACI 35

N.G.

CLIENT	JOB NUMBER
SUN OIL	RC-0086
SUBJECT: CONCRETE TRENCH DESIGN	- Preliminary -
BASED ON: ACI 318-89	DRAWING NUMBER
BY: REV	CHECKED BY: JLS 10/6/92
APPROVED BY	DATE: 3/5/92 REV

ALTERNATIVE CHECK FOR CRACK CONTROL -

COMPUTE ACTUAL "f_s"

SERVICE LOADS - (WITHOUT FACTORED LOAD & DURABILITY COEFFICIENTS)

$V_s = 2.18^k + 3.65^k + 3.78^k = 9.61^k$ (SEE P.4 CALCS)

$M_s = 2.18^k(3.67\ ft) + 3.65^k(5.5\ ft) + 3.78^k(3.67\ ft) = 41.95\ ft\cdot k$

#8 @ 7" $A_s = 1.35\ in^2$

$$f_s = M_s/(A_s j d) = \frac{41.95\ ft\cdot k\ (12\ in/1\ ft)}{1.35\ in^2\ (7/8)(17.5\ in)}$$

$f_s = 24.4$ ksi

$d_c = 2'' + 1/2(1'') = 2.5''$ (SEE SECT 2.6.6 ACI 350-89)

$$A = \frac{2 d_c \cdot S}{\text{No. BARS}}$$

$$A = \frac{2(2.5)(7.0)}{1\ \text{BAR}} = 35.0\ in^2$$

$$Z = 24.4\sqrt[3]{2.5(35.0)} = 108$$

$108 < 115$ (ok)

USE #8 @ 7"

NOT FINAL DESIGN
SEE NOTE - P.13
JLS 10/6/92

CLIENT Sun Oil		JOB NUMBER RC-0086	
SUBJECT Expansion Joint Spacing and Long'l Reinf. for Conc. Trench			
BASED ON		DRAWING NUMBER	
BY J. Schmohl	CHECKED BY R DUNCAN	APPROVED BY	DATE

TABLE OF CONTENTS

Description	Pages
Preliminary Basis of Design – Discussion	1
Preliminary Design – Expansion Joint Spacing	2 - 12
Expansion Joint Detail for Slabs & Walls of Trench	13
Revised Basis of Design – Discussion	14
Revised Design - Expansion Joint Spacing and Longitudinal Reinforcing	15 - 27
Final Design of Long'l Reinforcing for Slabs and Walls of Trench	28 - 32

CLIENT Sun Oil		JOB NUMBER RC-0086	
SUBJECT Expansion/Contraction Joint Spacing for Conveyance Trench			
BASED ON		DRAWING NUMBER	
BY J. Schmohl	CHECKED BY R DUNCAN	APPROVED BY	DATE 10/9/92

Preliminary
Basis of Design - Discussion:

Preliminary on pages 1-12
Expansion Joint Detail p. 13
Final Starts on page 14

An informal Civil/Structural meeting was held on 10/8/92 for the purpose of arriving at a basis of design for joints and joint spacing in the concrete trench. Present were the Project Discipline Lead (Paul Jeffrey), C/S Area Lead (Tony Palmer), Roy Duncan and the design engineer (myself). The design engineer presented a concern that the concrete slab and walls were effectively keyed into the sheet pile at the sides of the trench, potentially locking the sides of the trench against longitudinal movement. The design engineer also presented a number of options or alternatives to addressing the problem and results and consequences expected from each. Questions were raised such as whether the sheetpile would actually resist longitudinal movement, or whether the sheet pile was flexible enough so that longinal forces transferred to the concrete would be minor or negligible. Finally, the discussion centered on the "shear keys" formed at the edge of the concrete slab at the trench bottom. It was suggested that an analysis be made as to the slab reinforcement and joint spacing required in relation to slab movement and strength of the "shear keys".

Upon further discussion between Roy Duncan and myself, it was decided to begin the analysis with the following steps:

1. Consider only slab reinforcing/joint spacing required for the slab without regard to the "keying in" effect at the sheet pile wall.
2. Consider the effect of the shear keys at the edges of the bottom slab and the joint spacing/slab reinforcement needed assuming the sheet piles do not move.
3. Wall joint spacing/reinforcement could be alleviated by bonding steyrofoam boards on the sheet pile at what would be the compression face of the concrete shear keys during concrete shrinkage as discussed at the earlier meeting, if deemed necessary.
4. Report to C/S Area Lead on 1, 2 & 3 above before proceeding further

CLIENT Sun Oil		JOB NUMBER RC-0086	
SUBJECT Expansion Joint Spacing			
BASED ON		DRAWING NUMBER	
BY J. Schmohl	CHECKED BY R DUNCAN	APPROVED BY	DATE 10/9/92

Step 1: Expansion Joint Spacing for Slab on Grade without Regard to "Keying in" at sheet pile wall.

Design Criteria:

4,000 psi Concrete
60,000 psi Rebar (2" clear from conc. surface)
150 pcf Concrete wt.
ACI 350R-89 Working Stress Design ("Z" Facto
U.S. Steel Publication on Airport Paving - Appendix (Attached

Assume Slab Thickness 2'-0" (Trench w/ 11' High Walls)

From U.S. Steel Publication, Appendix "A", the coefficient of friction between the slab & Subgrade:

$$F = 0.585\sqrt{\frac{L}{T}}$$

where L = slab Length in feet (Joint Spacin

T = slab Thickness, inches

For 2'-0" Thick Slab, T = 24" and wt. of Slab W = 300 ps

Steel Stress, $f_s = \frac{FLW}{2A_s}$ U.S. Steel, App. "A", Eq. (2)

Minimum Shrinkage & Temp. Steel per ACI 318-89, Sect. 7.12.2.1

$$A_{s\,min} = 0.0018\,A_g = 0.0018(12")(24") = 0.52\,in^2$$

Try 25' Span Length (Length Between Exp. Joints)

$$f_s = \frac{\left(0.585\sqrt{\frac{25}{24}}\right)(25')(300)}{2(0.52\,in^2)} = 4{,}306\ psi$$ very low st

Appendix A

Subgrade Drag Theory

The amount of reinforcing steel required for slabs on grade (highway as well as airport) is frequently determined by the subgrade drag theory. In this theory the only factor taken into account is contraction of the slab due to shrinkage. This can be understood by reference to Figure 7 which shows a crack formed in the middle of the slab length.

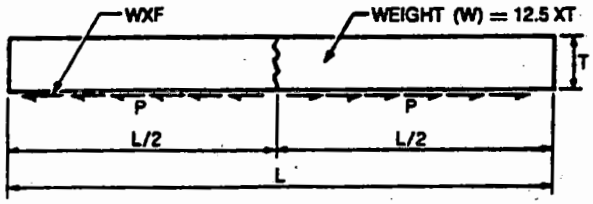

FIG. 7—SUBGRADE FRICTION FORCES

The friction between the slab and subbase caused excessive tensile stresses in the shrinking concrete and these stresses caused this crack. As the slab tends to shrink further, its motion away from the crack is conservatively considered to be resisted by these frictional forces acting at the bottom of the slab. Therefore, the total force developed on either side of the crack is

$$P = \frac{L}{2} F W \quad \cdots\cdots (1)$$

Where: L = Slab length (or width) in feet
F = Coefficient of friction between the slab and subgrade[1]
W = Weight of slab in pounds per square foot

The required area of steel, A_s, per foot of width (or length) to keep the crack faces in practical contact is obtained by dividing P by f_s.

$$A_s = \frac{F L W}{2 f_s} \quad \cdots\cdots (2)$$

Where: f_s = Allowable stress in the steel in pounds per square inch (psi).

In an earlier edition of their advisory circular[2], the FAA established a value for the subgrade friction of

$$F = 0.585\sqrt{\frac{L}{T}} \quad \cdots\cdots (3)$$

Where: T = Slab thickness in inches

For example, this formula would indicate a coefficient of subgrade friction, F, of 1.27 for a 16″ thick, 75′-0″ long slab and an F of 1.31 for an 8″ thick, 40′ long slab.

Substituting this and taking the weight of the concrete as 150 pounds per cubic foot or 12.5 pounds per square foot per inch of thickness gives the formula for determining the amount of reinforcing steel that appears in the current FAA requirements:

$$A_s = \frac{3.7\, L\sqrt{L\,T}}{f_s} \quad \cdots\cdots (4)$$

The FAA specified allowable working stress is 43,000 psi for smooth wire and 47,000 psi for deformed wire. These values are approximately two-thirds of the specified minimum yield strength.

For example, this formula indicates a required steel area, A_s, of 0.224 square inches per foot of smooth wire or 0.205 square inches per foot of deformed wire for a 16″ thick 75′-0″ long slab.

Equation (4), has been used to develop the required steel areas used to prepare Tables 1 and 2 which suggest fabric styles for various combinations of slab thickness and length.

[1] In the case of an overlay, this is the coefficient of friction between it and its support.
[2] AC: 150/5320-6A Date: September 15, 1971

CLIENT Sun Oil	JOB NUMBER RC-0086		
SUBJECT Expansion Joint Spacing			
BASED ON	DRAWING NUMBER		
BY J. Schmohl	CHECKED BY R DUNCAN	APPROVED BY	DATE 10/9/92

Establish Max. Span Lengths (Subgrade Drag Theory) for Various bar sizes at top & bottom of slab, 12" O.C.

Rebar	$A_{s\,Total}$	$f_{s\,Allowable}$ ACI 350	Estimated Slab Length, L	Calculated Stress
#5@12"	0.62 in²	22.8 ksi	85'	22.64 ksi
#6@12	0.88	21.6 ksi	100'	20.35
#7@12	1.20	22.0 21.6	125'	20.86
#8@12	1.58	21.6 21.6	150'	20.83
#9@12	2.00	21.25 20.6	170'	19.85
#10@12	2.54	20.95 20.6	200'	19.95
#11@12	3.12	20.56 20.6	230'	20.03

CLIENT Sun Oil		JOB NUMBER RC-0086	
SUBJECT Expansion Joint Spacing			
BASED ON		DRAWING NUMBER	
BY J. Schmohl	CHECKED BY R DUNCAN	APPROVED BY	DATE 10/13/92

Step 2: Consider Effect of Shear Keys at Edges of Bottom Sla

assuming the sheet piles do not move.

Assume PZ 27 Sheet Piles (See Attached Sheet):

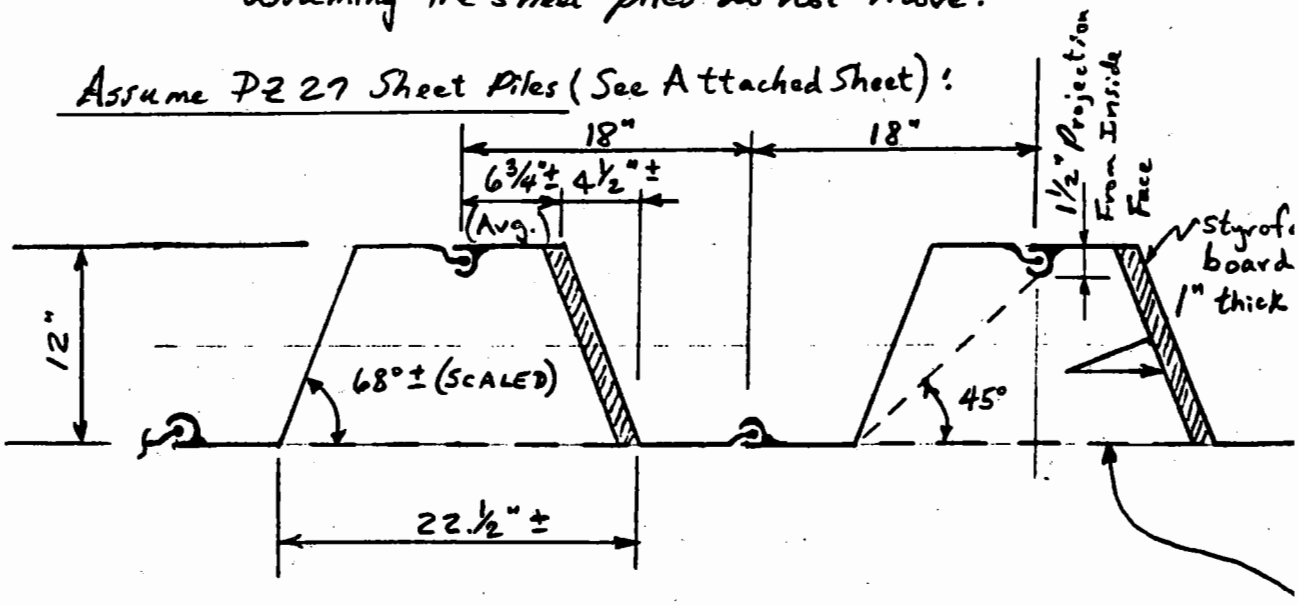

Consider the dashed line at the inside face of the sheet piles to be the plane at which it is appropriate to consider shear friction in accordance with ACI 318 section 11.7.

Note that since the sheet pile are assumed not to move (the wall would have to move out against passive soil pressure on the wall), shear friction reinforcing to hold the surfaces in contact is not required (See ACI 318, Sect. 11.7.7).

ACI 318, section 11.7.5 says shear strength V_n shall not be taken greater than

$$V_n \leq 0.2 f'_c A_c = 0.2(4{,}000\ psi) A_c = 800 A_c$$

For 2'-0" thick base slab, $A_c = 22.5"(24") = 540\ in^2$

$$V_n \leq 800 A_c = 800(540\ in^2) = 432{,}000\ lb = 432.0^k \text{ per shear key}$$

4 Bethlehem Sheet Piling Sections: Dimensions and Properties

Page 4

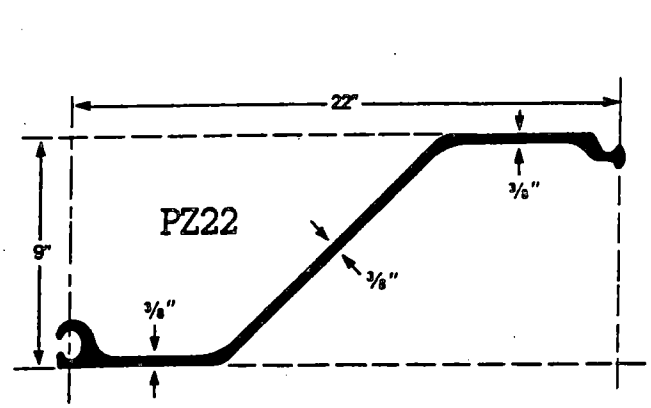

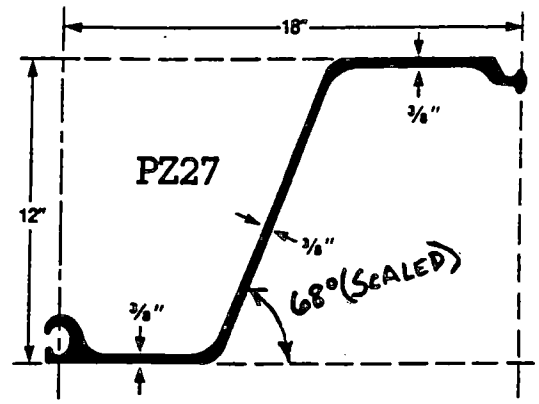

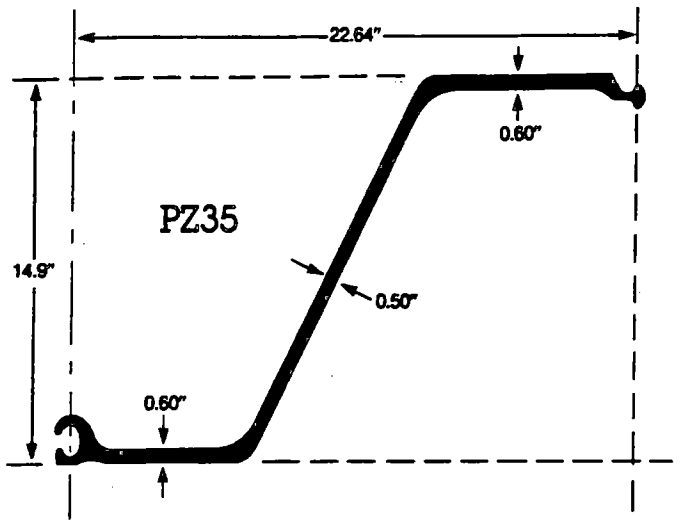

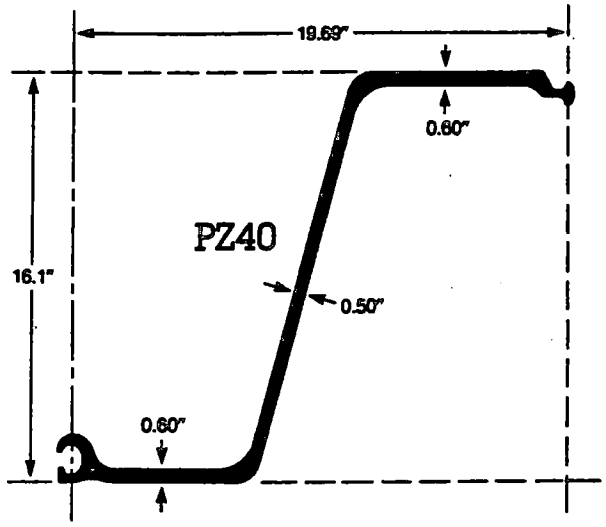

Interlocking

Because ball and socket dimensions are the same for all Bethlehem sheet piling sections, all sections can interlock with one another in either of two arrangements:

NORMAL

ALTERNATE

Section Designation	Area, sq in.	Nominal Width, in.	Weight in Pounds		Moment of Inertia, in.[4]	Section Modulus, in.[3]		Surface Area, sq ft per lin ft of bar	
			Per lin ft of bar	Per sq ft of wall		Single Section	Per lin ft of wall	Total Area	Nominal Coating Area*
PZ22	11.86	22	40.3	22.0	154.7	33.1	18.1	4.94	4.48
PZ27	11.91	18	40.5	27.0	276.3	45.3	30.2	4.94	4.48
PZ35	19.41	22.64	66.0	35.0	681.5	91.4	48.5	5.83	5.37
PZ40	19.30	19.69	65.6	40.0	805.4	99.6	60.7	5.83	5.37

*Includes socket interior and ball of interlock.

Steel grades: Bethlehem steel sheet piling can be supplied in standard ASTM A328 grade and in high-strength low-alloy grades ASTM A572 – Grade 50 and ASTM A690.

CLIENT Sun Oil		JOB NUMBER RC-0086	
SUBJECT Expansion Joint Spacing			
BASED ON		DRAWING NUMBER	
BY J. Schmohl	CHECKED BY R DUNCAN	APPROVED BY	DATE 10/13/92

Assuming the concrete actually shears at 800 psi (load factors and strength reduction factors have not been applied) and using f_s allowable = 20.6 ksi (ACI 350, Bar Sizes #9, #10 & #11 a 12" maximum spacing)

$$A_s \text{ req'd} = \frac{432.0^k}{20.6^{ksi}} = 21.0 \text{ in}^2$$ req'd to shear off one shear key!

NOTE:

It is expected that the force applied to each shear key will be proportional to it's distance from the mid-length of the slab (mid-way between expansion joints assumed to have zero longitudinal movement). Thus, it would appear to be extremely impractical to reinforce the slab (longitudinal reinforcing to the extent where a shear key would be sheared off.

Coefficient of Shrinkage for Concrete:

$C_s = 0.0002$ AASHTO Standard Specificatio for Highway Bridges, 15th Ed (19 Division I - Design, Sect. 8.5.4

Coefficient of Thermal Expansion:

$C_T = 0.000006$ per °F AASHTO Div. I, sect. 8.5.3

Thermal Forces: Concrete Structures, Cold Climate

Temperature Rise 35°F AASHTO Div. I, sect. 3.16

Temperature Fall 45°F

applied to lateral reinforcement in horizontal members and the term "ties" to those in vertical members.

Tension tie member—Member having an axial tensile force sufficient to create tension over the entire cross section and having limited concrete cover on all sides. Examples include: arch ties, hangers carrying load to an overhead supporting structure, and main tension elements in a truss.

Yield strength or yield point (f_y)—Specified minimum yield strength of yield point or reinforcement in pounds per square inch.

8.2 CONCRETE

The specified compressive strength, f'_c, of the concrete for each part of the structure shall be shown on the plans. The requirements for f'_c shall be based on tests of cylinders made and tested in accordance with Section 4—Division II.

8.3 REINFORCEMENT

8.3.1 The yield strength or grade of reinforcement shall be shown on the plans.

8.3.2 Reinforcement to be welded shall be indicated on the plans and the welding procedure to be used shall be specified.

8.3.3 Designs shall not use a yield strength, f_y, in excess of 60,000 psi.

8.3.4 Deformed reinforcement shall be used except that plain bars or smooth wire may be used for spirals and ties.

8.3.5 Reinforcement shall conform to the specifications listed in Division II, Section 5, except that, for reinforcing bars, the yield strength and tensile strength shall correspond to that determined by tests on full-sized bars.

Part B
ANALYSIS

8.4 GENERAL

All members of continuous and rigid frame structures shall be designed for the maximum effects of the loads specified in Articles 3.2 through 3.22 as determined by the theory of elastic analysis.

8.5 EXPANSION AND CONTRACTION

8.5.1 In general, provision for temperature changes shall be made in simple spans when the span length exceeds 40 feet.

8.5.2 In continuous bridges, the design shall provide for thermal stresses or for the accommodation of thermal movement with rockers, sliding plates, elastomeric pads, or other means.

8.5.3 The coefficient of thermal expansion and contraction for normal weight concrete may be taken as 0.000006 per deg. F.

8.5.4 The coefficient of shrinkage for normal weight concrete may be taken as 0.0002.

8.5.5 Thermal and shrinkage coefficients for lightweight concrete shall be determined for the type of lightweight aggregate used.

8.6 STIFFNESS

8.6.1 Any reasonable assumptions may be adopted for computing the relative flexural and torsional stiffnesses of continuous and rigid frame members. The assumptions made shall be consistent throughout the analysis.

8.6.2 The effect of haunches shall be considered both in determining moments and in design of members.

8.7 MODULUS OF ELASTICITY AND POISSON'S RATIO

8.7.1 The modulus of elasticity, E_c, for concrete may be taken as $w_c^{1.5}\ 33\ \sqrt{f'_c}$ in psi for values of w_c between 90 and 155 pounds per cubic foot. For normal weight concrete (w_c = 145 pcf), E_c may be considered as $57{,}000\ \sqrt{f'_c}$.

8.7.2 The modulus of elasticity, E_s, for nonprestressed steel reinforcement may be taken as 29,000,000 psi.

8.7.3 Poisson's ratio may be assumed as 0.2.

8.8 SPAN LENGTH

8.8.1 The span length of members that are not built integrally with their supports shall be considered the clear

elevation of the center of gravity of the exposed area of the superstructure.

Skew Angle of Wind	Trusses		Girders	
	Lateral Load	Longitudinal Load	Lateral Load	Longitudinal Load
Degrees	PSF	PSF	PSF	PSF
0	75	0	50	0
15	70	12	44	6
30	65	28	41	12
45	47	41	33	16
60	24	50	17	19

The loads listed above shall be used in Group II and Group V loadings as given in Article 3.22.

3.15.2.1.2 For Group III and Group VI loadings, these loads may be reduced by 70 percent and a load per linear foot added as a wind load on a moving live load, as given in the following table:

Skew Angle of Wind	Lateral Load	Longitudinal Load
Degrees	lb./ft.	lb./ft.
0	100	0
15	88	12
30	82	24
45	66	32
60	34	38

This load shall be applied at a point 6 feet above the deck.

3.15.2.1.3 For the usual girder and slab bridges having maximum span lengths of 125 feet the following wind loading may be used in lieu of the more precise loading specified above:

W (wind load on structure)
50 pounds per square foot, transverse;
12 pounds per square foot, longitudinal;
Both forces shall be applied simultaneously.

WL (wind load on live load)
100 pounds per linear foot, transverse;
40 pounds per linear foot, longitudinal;
Both forces shall be applied simultaneously.

3.15.2.2 Forces Applied Directly to the Substructure

The transverse and longitudinal forces to be applied directly to the substructure for a 100-mile per hour wind shall be calculated from an assumed wind force of 40 pounds per square foot. For wind directions assumed skewed to the substructure this force shall be resolved into components perpendicular to the end and front elevations of the substructure. The component perpendicular to the end elevation shall act on the exposed substructure area as seen in end elevation and the component perpendicular to the front elevation shall act on the exposed areas and shall be applied simultaneously with the wind loads from the superstructure. The above loads are for Group II and Group V loadings and may be reduced by 70 percent for Group III and Group VI loadings, as indicated in Article 3.22.

3.15.3 Overturning Forces

The effect of forces tending to overturn structures shall be calculated under Groups II, III, V, and VI of Article 3.22 assuming that the wind direction is at right angles to the longitudinal axis of the structure. In addition, an upward force shall be applied at the windward quarter point of the transverse superstructure width. This force shall be 20 pounds per square foot of deck and sidewalk plan area for Group II and Group V combinations and 6 pounds per square foot for Group III and Group VI combinations.

3.16 THERMAL FORCES

Provision shall be made for stresses or movements resulting from variations in temperature. The rise and fall in temperature shall be fixed for the locality in which the structure is to be constructed and shall be computed from an assumed temperature at the time of erection. Due consideration shall be given to the lag between air temperature and the interior temperature of massive concrete members or structures.

The range of temperature shall generally be as follows:

Metal Structures
Moderate climate, from 0 to 120°F.
Cold climate, from −30 to 120°F.

Concrete Structures	Temperature Rise	Temperature Fall
Moderate climate	30°F	40°F
Cold Climate	35°F	45°F

3.17 UPLIFT

3.17.1 Provision shall be made for adequate attachment of the superstructure to the substructure by ensuring that the calculated uplift at any support is resisted by tension members engaging a mass of masonry equal to

CLIENT Sun Oil		JOB NUMBER RC-0086	
SUBJECT Expansion Joint Spacing			
BASED ON		DRAWING NUMBER	
BY J. Schmohl	CHECKED BY R DUNCAN	APPROVED BY	DATE 10/13/92

Combined Shrinkage & Temperature Effect

Linear Contraction = 0.0002 + 0.000006 per °F (45°F)
= 0.0002 + 0.00027 = 0.00047 inches/inch

Step 3: Consider Bonding Styrofoam Boards to Sheet Pile Face Prior to Placing Slab Concrete (see sketch on page 4).

From ASTM C-578, Table 1 (copy attached), Compressive Resistance at 10% Deformation ranges from 5.0 psi(min) to 100 psi(min).

Due to angle of sheet pile web (See page 4), Longitudinal movement should be limited to

10%/sin 68° = 10.79% to limit resultant to 10%

(In effect, the insulation board acts as though it were thicker than

Try 1" thick Insulation Board on Compression Face of Shear Key with slab undergoing linear contraction:

Allowable Slab Length from Mid-Point to Exp. Joint

$$\frac{L_{max.}}{2} = \frac{10.79\% \ (1.0")}{0.00047 \text{ in/inch}} = 230" = 19.1'$$

So L_{max} = 2 (19.1') = 38.3' Say 38' max spacing between Exp. Joints

Compute Reinf. Req'd assuming 15.0 psi compressive resistance of Insulation Board (ASTM C-578, Table 1).

One Shear Key: Resisting Force = $15 \text{ psi} \left(\sin 68° \left(\frac{12"}{\sin 68°}\right)\right)(24") = 4320$ lb
= 4.32 kip per shear key

TABLE 1 Physical Property Requirements of RCPS Thermal Insulation

NOTE 1—The values for properties listed in this table may be affected by the presence of a surface skin which is a result of the manufacturing process. Where boards are tested with skins-in-place, this condition shall be noted in the test report.

NOTE 2—Type III has been deleted because it is no longer available.

Property										
Density, min lb/ft³ (kg/m³)	0.70 (12)	0.90 (15)	1.15 (18)	1.35 (22)	1.35 (22)	1.60 (26)	1.80 (29)	1.80 (29)	2.20 (35)	3.00 (48)
Thermal resistance of 1.00 in. (25.4 mm) thickness, min, F·ft²·h/Btu (K·m²/W) mean temperature:										
25°F (−3.9°C)	3.45 (0.61)	4.20 (0.74)	4.40 (0.77)	4.60 (0.81)	5.60 (0.99)	5.60 (0.99)	4.80 (0.84)	5.60 (0.99)	5.60 (0.99)	5.60 (0.99)
40°F (4.4°C)	3.30 (0.58)	4.00 (0.70)	4.20 (0.74)	4.40 (0.77)	5.40 (0.95)	5.40 (0.95)	4.60 (0.81)	5.40 (0.95)	5.40 (0.95)	5.40 (0.95)
75°F (23.9°C)	3.10 (0.55)	3.60 (0.63)	3.80 (0.67)	4.00 (0.70)	5.00 (0.88)	5.00 (0.88)	4.20 (0.74)	5.00 (0.88)	5.00 (0.88)	5.00 (0.88)
110°F (43.3°C)	2.90 (0.51)	3.25 (0.57)	3.45 (0.61)	3.65 (0.64)	4.65 (0.82)	4.65 (0.82)	3.85 (0.69)	4.65 (0.82)	4.65 (0.82)	4.65 (0.82)
Compressive resistance at yield or 10 % deformation, whichever occurs first (with skins intact), min, psi (kPa)	5.0 (35)	10.0 (69)	13.0 (90)	15.0 (104)	15.0 (104)	25.0 (173)	25.0 (173)	40.0 (276)	60.0 (414)	100.0 (690)
Flexural strength, min, psi (kPa)	10.0 (70)	25.0 (173)	30.0 (208)	40.0 (276)	40.0 (276)	50.0 (345)	50.0 (345)	60.0 (414)	75.0 (517)	100.0 (690)
Water vapor permeance of 1.00 in. (25.4 mm) thickness, max, perm (ng/Pa·s·m²)	5.0 (287)	5.0 (287)	3.5 (201)	3.5 (201)	1.1 (63)	1.1 (63)	2.0 (115)	1.1 (63)	1.1 (63)	1.1 (63)
Water absorption by total immersion, max, volume %	4.0	4.0	3.0	3.0	0.3	0.3	2.0	0.3	0.3	0.3
Dimensional stability (change in dimensions), max, %	2.0	2.0	2.0	2.0	2.0	2.0	2.0	2.0	2.0	2.0
Oxygen index, min, volume %	24.0	24.0	24.0	24.0	24.0	24.0	24.0	24.0	24.0	24.0
Classification	Type XI	Type I	Type VIII	Type II	Type X	Type IV	Type IX	Type VI	Type VII	Type V

TABLE 2 Dimensions of Cellular Polystyrene Insulation

Type	XI, I, VIII, II, IX	X, IV	VI, VII	V
Width, in. (mm)	12 to 48 (305 to 1219)	16, 24, 48 (406, 610, 1219)	24 (610)	16 (406)
Length, in. (mm)	48 to 192 (1219 to 4877)	48, 96 108 (1219, 2438, 2743)	48, 96, (1219, 2438)	96 (2438)
Thickness, in. (mm)	⅜ to 24 (9.5 to 610)	½ to 4 (13 to 102)	1 to 4 (25 to 102)	1 to 4 (25 to 102)

5.1.3.1 *Thermal Resistance/Thickness Relationship*—the thermal resistance (*R*-value) of RCPS thermal insulation will vary with thickness. Therefore, when ordering, specify the *R*-value or the thickness, or both. For additional information, see Test Method C 177 or Test Method C 518,

5.1.4 Tolerance, if other than specified (see 8.2),

5.1.5 Length and width required (see Table 2),

5.1.6 If other than straight edges are required (see 8.3),

5.1.7 If either ship-lap or tongue-and-groove edges are required (see 8.6),

5.1.8 *Tapered Insulation*—special ordering information. In addition to other applicable requirements in Section 5 (Note 1), acquisition documents for tapered RCPS thermal insulation shall specify the following:

5.1.8.1 Minimum starting thickness,

5.1.8.2 Slope, in./ft (mm/m),

5.1.8.3 Average *R*-value,

5.1.8.4 Minimum thickness,

5.1.8.5 *Shop Drawings*—the tapered insulation supplier shall provide shop drawings to illustrate installation patterns and dimensions for each tapered module,

5.1.9 Sampling, if different (see 10.1),

5.1.10 If a certificate of compliance is required (see 14.1), and

5.1.11 If marking is other than specified (see 15.1).

NOTE 1—Physical properties of tapered insulation should be determined on blocks of RCPS thermal insulation before the insulation is tapered.

6. Materials and Manufacture

6.1 RCPS thermal insulation shall be formed by the expansion of polystyrene resin beads or granules in a closed mold, or by the expansion of polystyrene base resin in an extrusion process. RCPS thermal insulation shall be of uniform density and have essentially closed cells. All RCPS thermal insulation shall contain sufficient flame retardants to meet the oxygen index requirements of Table 1.

7. Physical Requirements

7.1 *Inspection Requirements:*

7.1.1 The physical requirements listed in this section are defined as inspection requirements (refer to Criteria C 390).

7.1.2 All dimensional requirements are described in Section 8.

7.1.3 All workmanship, finish, and appearance requirements are described in Section 9.

7.1.4 Density shall be in accordance with Table 1.

7.2 *Qualification Requirements:*

7.2.1 The physical properties listed in this section of the specification are defined as qualification requirements (refer to Criteria C 390). Thermal resistance, compressive resistance, flexural strength, water vapor permeance, water absorption, dimensional stability and oxygen index shall be in accordance with Table 1.

7.2.2 Compliance with qualification requirements shall be in accordance with Criteria C 390.

CLIENT Sun Oil		JOB NUMBER RC-0086	
SUBJECT Expansion Joint Spacing			
BASED ON		DRAWING NUMBER	
BY J. Schmohl	CHECKED BY R DUNCAN	APPROVED BY	DATE 10/13/92

For 30' span between joints, will have

$$\frac{30'}{2(3.0' \text{ Key Spacing})} = 5 \text{ shear keys each way}$$

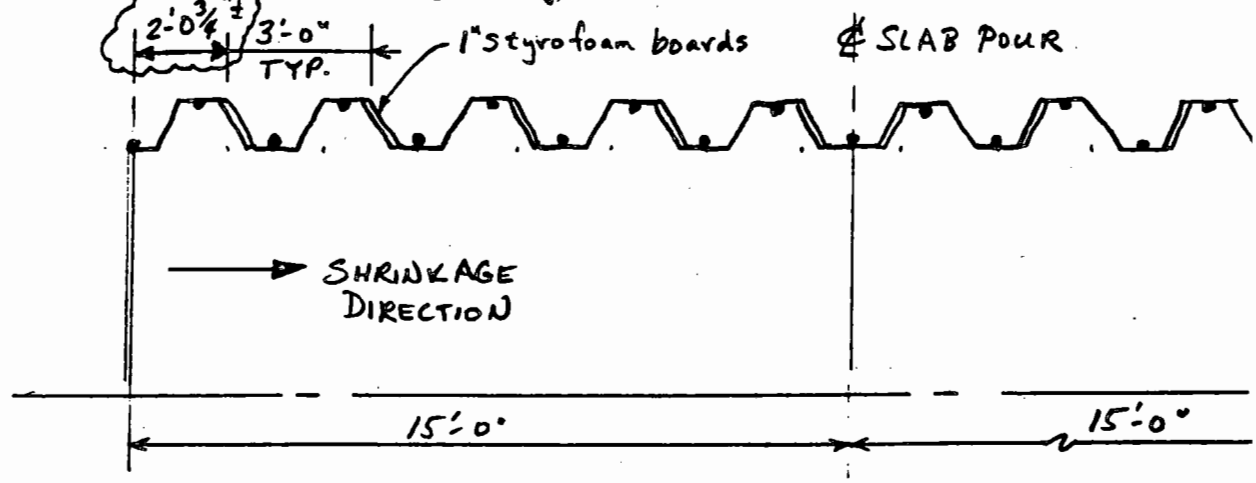

With reference to the first sentence of the note on page 5, assu
Total Shear Key Force (½ Slab width) for Compressing Insul. Bo

$$F_1 = \frac{4.32^k}{15'}(13' + 10' + 7' + 4' + 1') = 10.1^k$$

Consider The Sheet Pile Knuckle (Net Projection $1\frac{7}{8}" - \frac{3}{8}" = 1\frac{1}{2}"$) in Compression directly against Concrete. The expected failure/stress relief mode is a diagonal crack out of the edge of the shear key (See sketch on page 4).

The diagonal Shear Strength per ACI 318, sect. 11.3.1

Roy suggests this should be 6 (?)

$$V_c = 2\sqrt{f'_c}\, b_w d$$

Where $b_w = 24"$ for bottom s
Say $d = 11.25"$

$$V_c = 2\sqrt{4000}\,(24")(11.25") = 34{,}150 \text{ lb} = 34.2^k \text{ to shear (}$$

one Key

(May be Non-Conservative)

CLIENT Sun Oil		JOB NUMBER RC-0086	
SUBJECT Expansion Joint Spacing			
BASED ON		DRAWING NUMBER	
BY J. Schmohl	CHECKED BY R DUNCAN	APPROVED BY	DATE 10/13/92

With reference to the first sentence of the note on page 5, assume Total of Shear Forces (1/2 Slab width) for Diagonal Shear of Shear Keys

$$F_2 = \frac{34.2^k}{13.5'}(13.5' + 10.5' + 7.5' + 4.5' + 1.5') = 95.0^k$$

Calculate Subgrade Drag Force for 30' slab (Ref. page 2)

$$\text{Force } F_3 = f_s A_s = \frac{\left(0.585\sqrt{\frac{30}{24}}\right)(30')(300)}{2} = 2{,}943 \text{ lb/ft of wi}$$

$$1/2 \text{ Slab width} = 5' + 1.75' (\text{avg.}) = 6.75'$$

$$\times 2943 = 19{,}870^{lb}$$

$$F_3 = 19.9^k$$

See page 9 - Use $F_3 = 35.4^k$ & min. slab width = 6.50' (1/2 slab)

Add Forces from Compression of Insulation Board, Shear at Edge of Shear Keys, and Subgrade Drag Force

$$F_{Total} = F_1 + F_2 + F_3 = 10.1^k + 95.0^k + \cancel{19.9^k}\ 35.4 = \cancel{125.0^k}\ 140.5^k$$

$$\text{Force Per ft of Slab Width} = \frac{\cancel{125.0^k}\ 140.5^k}{\cancel{6.75'}\ 6.50'} = \cancel{18.52}\ 21.62\ ^k/ft$$

Try #6 @ 12" Top & Bottom of Slab

f_s Allowable = 21.6 ksi

$$A_s \text{ req'd} = \frac{\cancel{18.52}\ 21.62\ ^k/ft}{21.6^{ksi}} = \cancel{0.86}\ 1.00 \text{ in}^2/\text{ft of slab}$$

~~#6 @12" T.&B. ⇒ As = 0.88 in²/ft~~

Note: Due to uncertainties and considering the horizontal wall reinforcing on sh. 9, use #7 @ 12" T.&B

⇒ As. = 1.20 in²/ft

CLIENT Sun Oil		JOB NUMBER RC-0086	
SUBJECT Expansion Joint Spacing			
BASED ON		DRAWING NUMBER	
BY J. Schmohl	CHECKED BY R DUNCAN	APPROVED BY	DATE 10/13/92

Determine Horiz. Reinf. Req'd in Walls of Trench:

Note: Forces F_1 and F_2 will be the same as calculated previously for the base slab, per 2'-0" of wall height.

So, for one foot of wall height:

$$F_{total} = \frac{F_1 + F_2}{2} = \frac{10.1^k + 95.0^k}{2} = \frac{105.1^k}{2} = 52.6^k/ft$$

of wall height

Subgrade Drag including Weight of Walls (Ref. page 8)

.25×14.5
.25×11 = 24.75
39.25
÷ 7.25
5.41

Have 2'-0" thick bottom slab and 1'-9" thick (avg.) walls with an add'l 6" of conc. (avg.) in the corrugations of the sheet pile walls. For subgrade, recalculate the bottom slab reinforcing assuming an equivalent 5'-6" slab thickness

So Force $F_3 = f_s A_s = \frac{\left(0.585\sqrt{\frac{30}{66}}\right)(30')(825)}{2} = 4{,}880$ lb/ft of width

for ½ Slab Width

$F_3 = 4{,}880(7.25' \text{ avg}) = 35{,}400 \text{ lb} = \underline{35.4^k}$

Try #7@6" Each Face of wall

$$A_{s\,req'd} = \frac{52.6^k/ft}{27.3^{ksi}} = 1.93 \text{ in}^2/ft \text{ of wall}$$

#7@6" E.F. → 2.40 in²/ft

Say ok

CLIENT Sun Oil		JOB NUMBER RC-0086	
SUBJECT Expansion Joint Spacing			
BASED ON		DRAWING NUMBER	
BY J. Schmohl	CHECKED BY TR DUNCAN	APPROVED BY	DATE 10/13/92

Consider the Effect of the Inward Component of the Compressive Force on the Insulation Board as it affects the Concrete Wall: (See Sketch on page 4 and equation at bottom of page 6)

One shear Key: Inward Force = $15psi\left(\cos 68^\circ\right)\left(\frac{12''}{\sin 68^\circ}\right)(12'') = 873$ lb/ft of wall height

$$\frac{873 \text{ lb/ft of wall height/shear key}}{3' \text{ wall width/shear key}} = 291 \text{ lb/ft}^2 \text{ on wall}$$

This is worst case - near exp. joints in walls

Note: Live Load Surcharge on the wall was 332 psf

Per ACI 318, 9.2.7

$$U = 0.75(1.4D + 1.4T + 1.7L)$$

but not less than

$$U = 1.4(D + T)$$

So Shear & Moment in Conc. walls are probably OK.

(Check to be sure for Final Design)

CLIENT Sun Oil		JOB NUMBER RC-0086	
SUBJECT Expansion Joint Spacing			
BASED ON		DRAWING NUMBER	
BY J. Schmiehl	CHECKED BY TR DUNCAN	APPROVED BY	DATE 10/14/92

Consider the Reinforcement Limit for the Trench walls under the assumption that too much steel will make the concrete in the wall crack. Ref. the PCA publication titled "Circular Concrete Tanks Without Prestressing", pages 1 & 2.

With reference to Equation 1 in the above ref. PCA publication

EQ. 1) $$f_c = \frac{C E_s A_s + T}{A_c + n A_s}$$ (See Derivation on pages 19 & 20)

where C = shrinkage coefficient = 0.00047 may be conservative
$E_s = 29 \times 10^3$ ksi (See p. 5A)
A_s = #7@6" E.F. ⇒ 2.40 in²
T = 52.6ᵏ / ft. of wall Height
A_c = 12"(18") = 216 in² (@ minimum thickness)
$E_c = 57{,}000\sqrt{f'_c} = 3.6 \times 10^3$ ksi for f'_c = 4,000
$n = E_s / E_c = 8.0$

So

$$f_c = \frac{0.00047(29\times10^3)(2.40) + 52.6^k}{216\,in^2 + 8.0(2.40\,in^2)} = \frac{32.7^k + 52.6^k}{235.2\,in^2}$$

$f_c = 0.363^{ksi} = 363$ p

p.3 of PCA Publication

Since $f_c \leq 0.10 f'_c = 400$ psi, the design is satisfactory with regard to tensile stress in concrete.

CLIENT Sun Oil		JOB NUMBER RC-0086	
SUBJECT Expansion Joint Spacing			
BASED ON		DRAWING NUMBER	
BY J. Schmohl	CHECKED BY R DUNCAN	APPROVED BY	DATE 10/14/92

Expansion Joint Details:

Discussion: While the expansion joint location shown on page 7 (relative to the sheet pile sections) would be ideal, as a practical matter this can not be controlled. The driving of the sheet pile walls on both sides of the trench will result in areas where sheet piles are staggered and the joint will not meet at the inside face of the sheet piles on both sides of the trench. (See Revised Basis on page 14).

In order to compensate for this alignment problem, it is suggested that expansion joint material be placed along the inside face of sheet piles at slab and wall expansion joints as shown below:

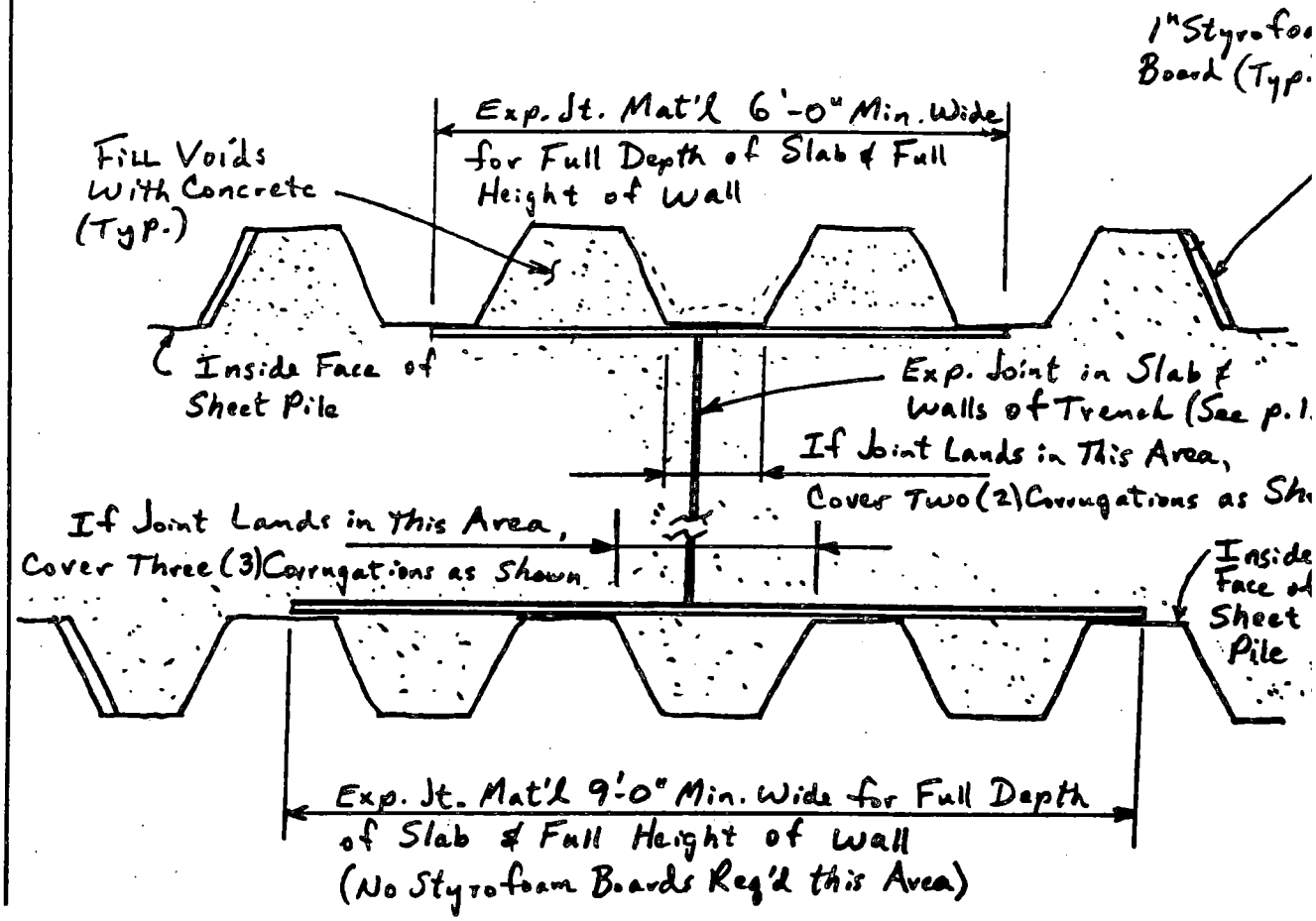

CLIENT Sun Oil		JOB NUMBER RC-0086	
SUBJECT Expansion Joint Spacing			
BASED ON		DRAWING NUMBER	
BY J. Schmohl	CHECKED BY R DUNCAN	APPROVED BY	DATE 10/14/92

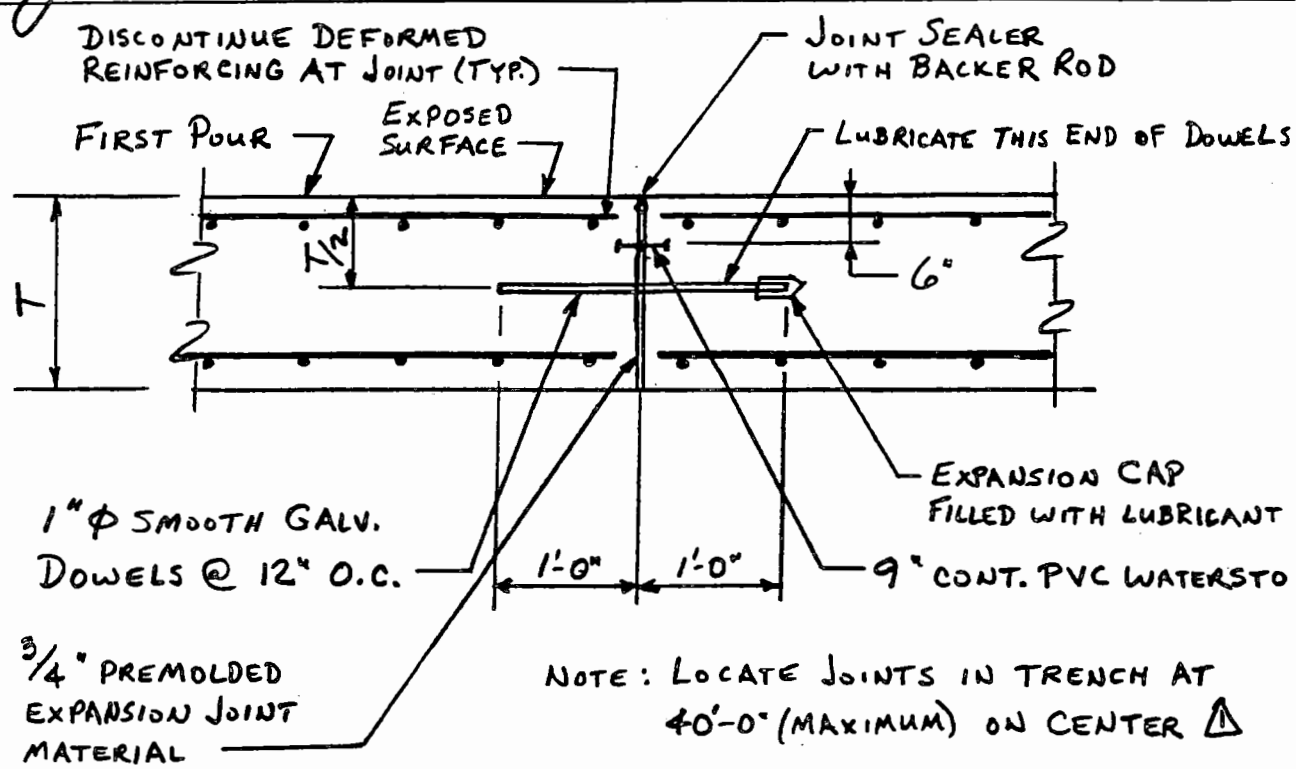

NOTE: LOCATE JOINTS IN TRENCH AT 40'-0" (MAXIMUM) ON CENTER ⚠

DETAIL - EXPANSION JOINT IN BOTTOM SLAB

(DETAIL AT TRENCH WALLS SIMILAR)

(NOTE: USE THIS DETAIL FOR TRENCH WALLS AND BOTTOM SLABS.)

NOTE: Install Backer Rod and Joint Sealer in accordance with Manufacturer's written Instructions.

CLIENT Sun Oil		JOB NUMBER RC-0086	
SUBJECT Expansion Joint Spacing			
BASED ON		DRAWING NUMBER	
BY J. Schmohl	CHECKED BY R DUNCAN	APPROVED BY	DATE 10/14/92

Revised Basis of Design - Discussion

At an informal meeting this afternoon with the same people in attendance as for our meeting on 10/8/92, the findings of our investigation outlined on page 1 were reviewed. Since the forces necessary to fail the concrete shear keys were so large, it was decided to make investigations based on the following combinati

A. Trench Walls:

Assume the expansion joint will be skewed slightly (up 4½"± across the trench) as necessary for the joints to hit the flat inside face of the sheetpile wall (ref. uppe part of the sketch on page 12). For this situation, calcul the following effects:

1. The force necessary to deform the sheetpile between th shear keys at the ends of adjacent slab sections.
2. The force necessary to shear the soil in successive corrugations similar to what was done for the concrete shear keys (ref. pages 7 & 8). Try calculating reinforcin requirements for a 60' exp. joint spacing.
3. Consider additional reinforcing requirements assuming the base slab has seen 50% of its curing shrinkage before the wall concrete is placed.

B. Trench Bottom Slab:

Analyze Same as 1 & 2 for walls (above), except consider several feet of sheet pile wall above and below the slab to move along with the slab.

3. Combine with reinforcing needed in accordance with the subgrade drag theory (ref. previous pages 2 & 3).

CLIENT Sun Oil		JOB NUMBER RC-0086	
SUBJECT Expansion Joint Spacing			
BASED ON		DRAWING NUMBER	
BY J. Schmohl	CHECKED BY R DUNCAN	APPROVED BY	DATE 10/14/92

Assume 60' Spacing Between Expansion Joints:

Maximum movement (opening) of expansion joint (ref. page 5 & 6

$\Delta_{joint} = 0.00047\,(60')(12''/') = 0.338''$

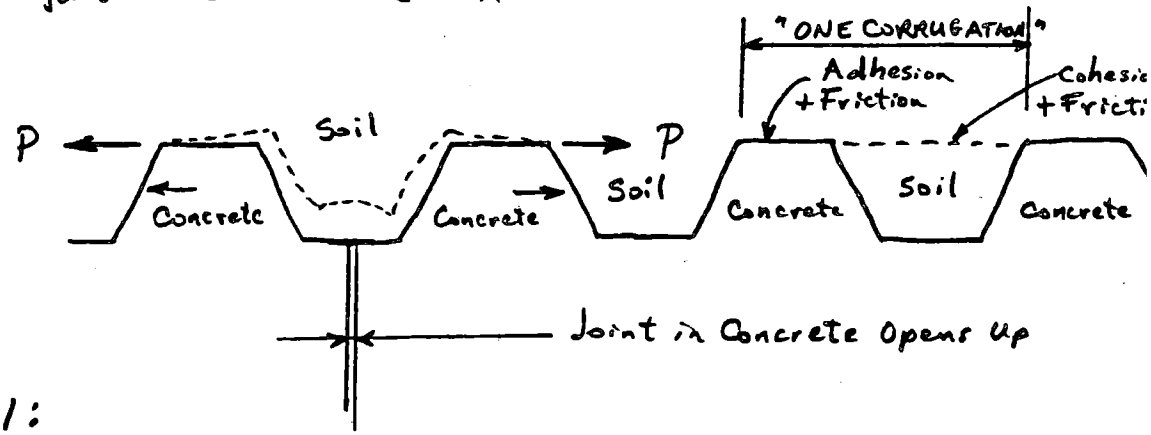

Step 1:

Neglecting the possibility of rotation of the sheet pile interlock. (hinges), the sheet pile will tend to deform as indicated in the above sketch.

As a quick and conservative approach to finding the force "P", assume the following:

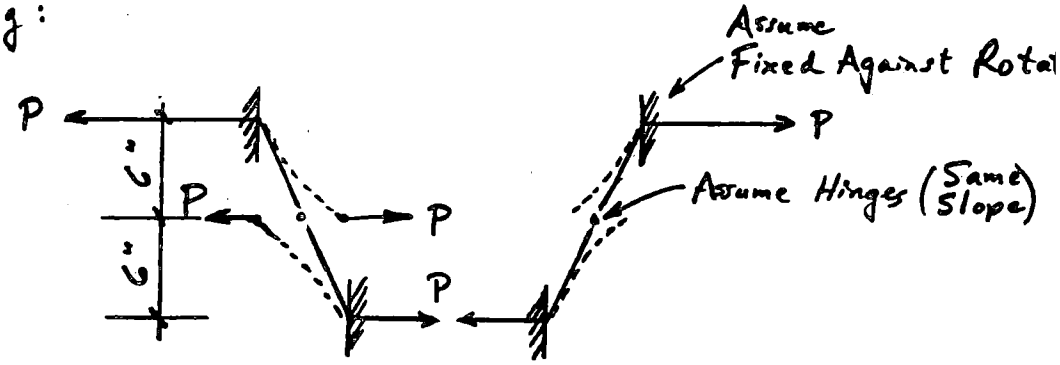

Fixed End Moment = 6P

Moment at Yield Stress $M_y = f_y S = \frac{f_y b h^2}{6} = 10.125$ i

where $f_y = 36^{ksi}$ & $b = 12''$ & $h = 3/8''$

So $P_{yield} = \frac{10.125 \text{ in-k}}{6 \text{ in}} = 1.69^k$ per foot of wall height

Say 1.7^k " " " "

CLIENT Sun Oil		JOB NUMBER RC-0086	
SUBJECT Expansion Joint Spacing			
BASED ON		DRAWING NUMBER	
BY J. Schmohl	CHECKED BY TR DUNCAN	APPROVED BY	DATE 10/15/92

Step 2:

Force Necessary to Shear Soil in One Corrugation:

(Refer to right side of sketch shown on page 15)

Cohesion: As shown on page 16A, cohesion for type "F LOOSE" fill is 100 to 300 psf, and for type "F DENSE" fill it is 200-500 psf. For this analysis, assume an average value of 300 psf for the full height of the trench wall.

So Cohesion Force developed per corrugation per ft. of wall height

$$F_c = 300\,psf\left(\frac{22\tfrac{1}{2}''}{12''/_{1}}\right)(1\,ft) = 563\,Lb = 0.56^{K}$$

Adhesion of soil to steel: From page 16A, adhesion of soil against rough concrete is 50 psf for type "F LOOSE" and 150 psf for type "F DENSE." Assuming lower values for soil adhesion to the outside flange of the sheet piles, use 75 psf for full wall height

$$F_A = 75\,psf\left(\frac{13\tfrac{1}{2}''}{12''/_{1}}\right)(1\,ft) = 84\,Lb = 0.08^{K}$$

Friction of Soil Against Soil in Corrugation: Since the concrete will be cast against the sheet pile before these forces will begin to develop, assume at-rest soil pressure for buoyed type "F DENSE" (42 pcf equivalent fluid pressure).

Assume the friction force in the soil

$$F_{FS} = \gamma_{fluid} \cdot h \cdot \tan\phi \cdot (\text{Contact Area})$$

For height of fill, $h = 11'$ at base of wall & $\phi = 20°$

$$F_{FS} = 42\,pcf(11')\overset{(0.364)}{\tan 20°}\left(\frac{22\tfrac{1}{2}''}{12''/_{1}}\right)(1\,ft) = 315\,Lb = 0.32^{K}$$

DESIGN SOIL PROPERTIES
SUN OIL-MCAP
ML3626-20
JD 4/8/92
REVISED 4/23/92

SOIL DESCRIPTION	SYMBOL	STRATUM E "LOOSE" FILL SPT < 10	STRATUM F "DENSE" FILL SPT ≥ 10	STRATUM 1A SILT/CLAY	STRATUM 1B RECENT ORGANIC SILT/CLAY	STRATUM 1C OLD ORGANIC SILT/CLAY	STRATUM 2 SAND AND GRAVEL	STRATUM 3 DECOMPOSED ROCK
UNIT WEIGHT (pcf)	γ	105	125	130	90	100	130	130
BUOY. UNIT WEIGHT (pcf)	γb	43	63	68	28	38	68	68
ANGLE OF INTERNAL FRICTION(°)	ϕ	5-10	20	15	10	15	38	25
COHESION (psf)	c	100-300	200-500	1200	600	800	0	2500
ADHESION (psf)	ca	50	150	700	400	500	0	1500
POISSON'S RATIO	ν	0.2-0.4	0.2-0.4	0.3	0.4	0.4	0.2	0.3
ACTIVE EARTH PRESSURE COEFF.	Ka	0.83	0.50	0.59	0.70	0.59	0.24	0.41
AT-REST EARTH PRESSURE COEFF.	Ko	0.91	0.66	0.74	0.83	0.74	0.38	0.58
PASSIVE EARTH PRESSURE COEFF.	Kp	1.19	2.03	1.70	1.42	1.70	4.00	2.40
FRICTION FACTOR	tan δ	0.3	0.3	0.4	0.3	0.3	0.4	0.4
COEFFICIENT OF PERMEABILITY (cm/sec)	K	5.0E-04 5.0E-05	5.0E-04 5.0E-05	1.0E-06 1.0E-07	1.0E-04 5.0E-06	1.0E-04 5.0E-06	1.0E-03 1.0E-05	1.0E-05 1.0E-06
	δ	17	17	22	17	17	22	22

← RANKINE; $K_a = \tan^2(4$

← RANKINE; $K_p = \frac{1}{K_a} = \tan^2($

NOTES:
- ADHESION AND FRICTION FACTORS ARE FOR SOILS AGAINST ROUGH CONCRETE ← ASSUME MAT CONCRETE
- FILL SOIL PARAMETERS VARY APPRECIABLY FROM LOCATION TO LOCATION, VALUES STATED ARE AVERAGE

SHEET 1 OF 2

TABLE 6.0

FRICTION FACTOR (STEEL) BASED ON NAVDIC TABLE	tan δ	0.2	0.2	0.25	0.2	0.2	0.25	0.25	← BASED ON COMPARISON

SITE

CLIENT Sun Oil		JOB NUMBER RC-0086	
SUBJECT Expansion Joint Spacing			
BASED ON		DRAWING NUMBER	
BY J. Schmohl	CHECKED BY R DUNCAN	APPROVED BY	DATE 10/15/92

Friction of Soil Against Flange of Sheet Pile: Using a friction factor of 0.2 for soil against steel (ref. bottom of page 16A)

$$F_{FP} = \gamma_{fluid}\, h\, (0.20)(\text{Contact Area})$$

For height of fill, $h = 11'$ at base of wall

$$F_{FP} = 42\,pcf\,(11')(0.20)\left(\frac{13\tfrac{1}{2}''}{12''/'}\right)(1\,ft) = 104\,Lb = 0.10^{k}$$

The Total Force necessary to shear the soil at one corrugation at the base of an 11' wall is

$$F_{Total} = F_c + F_A + F_{Fs} + F_{FP}$$

$$= 0.56^{k} + 0.08^{k} + 0.32^{k} + 0.10^{k} = 1.06^{k} \text{ per corrugation per foot of wall h}$$

Note that the distribution of soil forces along the wall will not be assumed directly proportional to shrinkage strain as was assumed for the concrete shear keys. This is explained by the assumption that when a concrete shear key failed, it no longer carried any load. In the case of earth cohesion, adhesion and friction forces, we will assume that the soil has time to restabilize after movement, so it will continue to carry load as the sheet pile moves longitudinally thru the soil. The relationship between longitudinal movement (soil strain) and cohesion/adhesion/friction forces from the soil is not readily apparent, so the forces will be assumed to act all along the wall.

CLIENT Sun Oil		JOB NUMBER RC-0086	
SUBJECT Expansion Joint Spacing			
BASED ON		DRAWING NUMBER	
BY J. Schmohl	CHECKED BY TR DUNCAN	APPROVED BY	DATE 10/15/92

Assuming a 60' expansion joint spacing, we will assum 30' acts in each direction, so the total soil force per foot of height at the base of an 11' high wall will be

$$F_{\substack{60' \\ \text{Spacing}}} = \frac{1.06^{k}/\text{corrugation}\,(30'\text{ wall acting each way})}{3\,^{ft}/\text{corrugation}} = 10.6^{k}/ft.$$

wall hei

Step 3: Consider Base Slab Placed and Partially Cured before Walls are Placed:

Assume the trench bottom slab is placed and cures for up to 28 days prior to the walls being placed. From ACI 350-1 Section 2.8, Fig. 2.8.1, up to 50% of the concrete curing shrinkage could take place in the slab before the walls are placed. When the walls are placed, they will eventually shrink up t twice as much as the remaining shrinkage the slab will undergo, due to the initial slab shrinkage.

This will cause the concrete near the base of the wall to want to crack, due to the resistance of the base slab to compress to match the movement of the wall.

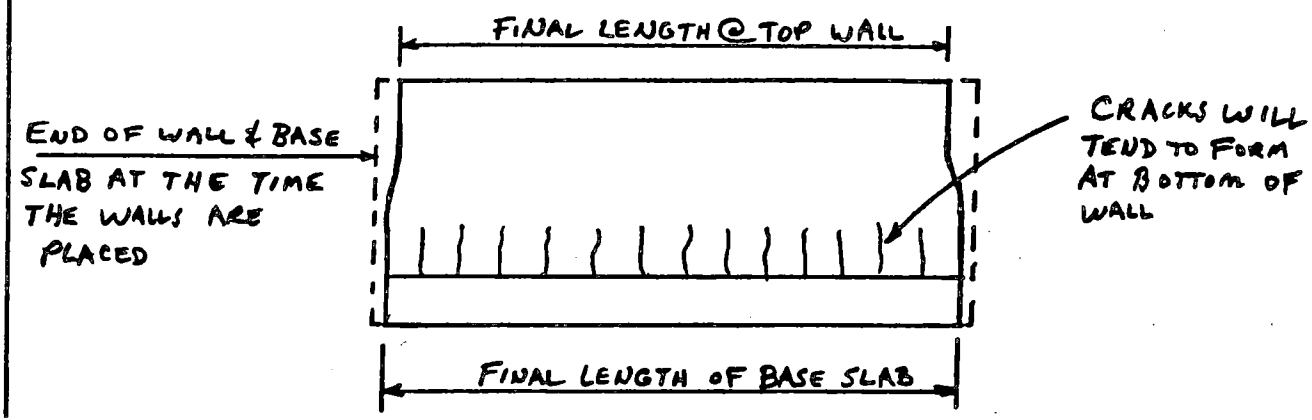

CLIENT Sun Oil		JOB NUMBER RC-0086	
SUBJECT Expansion Joint Spacing			
BASED ON		DRAWING NUMBER	
BY J. Schmohl	CHECKED BY R DUNCAN	APPROVED BY	DATE 10/15/92

The differential shrinkage of the walls relative to the bottom slab is similar to the requirements for proportioning of walls for "Circular Concrete Tanks Without Prestressing" as published by the Portland Cement Association.

Following the derivation in the PCA publication, their model may be described as follows:

Consider a block of concrete reinforced with a bar but otherwise unrestrained. The height of the block is chosen as 1 ft. The dimension "t" is the wall thickness, and A_s is the steel area.

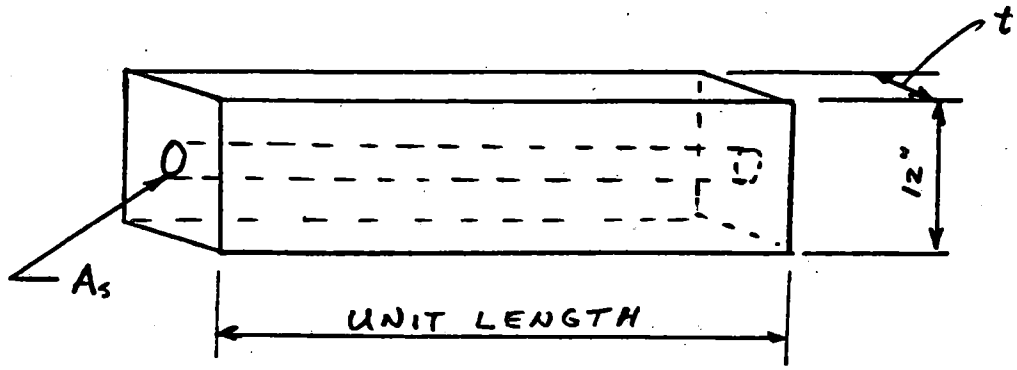

If the bar is left out, shrinkage will shorten the unit long block a distance "C". The presence of the steel bar prevents some of the shortening of the concrete, so the increase i length compared to the unstressed block is a distance xC, where x is an unknown quantity. Compared with the unrestrained block, the concrete is elongated a distance xC from its unstressed condition, so the concrete stress is $f_{cs} = xCE_c$. Compared with the original condition, the steel is shortened a distance $(1-x)C$, so the steel stress is $f_{ss} = (1-x)CE_s$. The total tension in the concrete equals the total compression in the steel, so for a steel percentage "p", the equation may be written $pf_{ss} = f_{cs}$. Considering the total effective area for concrete & steel equal to $A_c(1+np)$, the

CLIENT Sun Oil		JOB NUMBER RC-0086	
SUBJECT Expansion Joint Spacing			
BASED ON		DRAWING NUMBER	
BY J. Schmohl	CHECKED BY R DUNCAN	APPROVED BY	DATE 10/15/92

Stress equations for the concrete block with reinforcing bar may be written:

$$f_{ss} = CE_s\left(\frac{1}{1+np}\right)$$ compression in steel

$$f_{cs} = CE_s\left(\frac{p}{1+np}\right)$$ tension in concrete

Superimposing a net tension force "T" on the section adds a stress equal to $T/A_c(1+np)$, resulting in a combined concrete stress of

$$f_c = \frac{CE_sA_s + T}{A_c + nA_s}$$

To prevent cracking of the concrete, the concrete tensile stress should be kept below $0.10f'_c$, or 400 psi for 4,000 psi concrete.

CLIENT Sun Oil		JOB NUMBER RC-0086	
SUBJECT Expansion Joint Spacing			
BASED ON		DRAWING NUMBER	
BY J. Schmohl	CHECKED BY R DUNCAN	APPROVED BY	DATE 10/15/92

Now Consider our model. Refer to the sketch at the bottom of page 18. Looking at a cross section of the wall and ½ width of the base slab

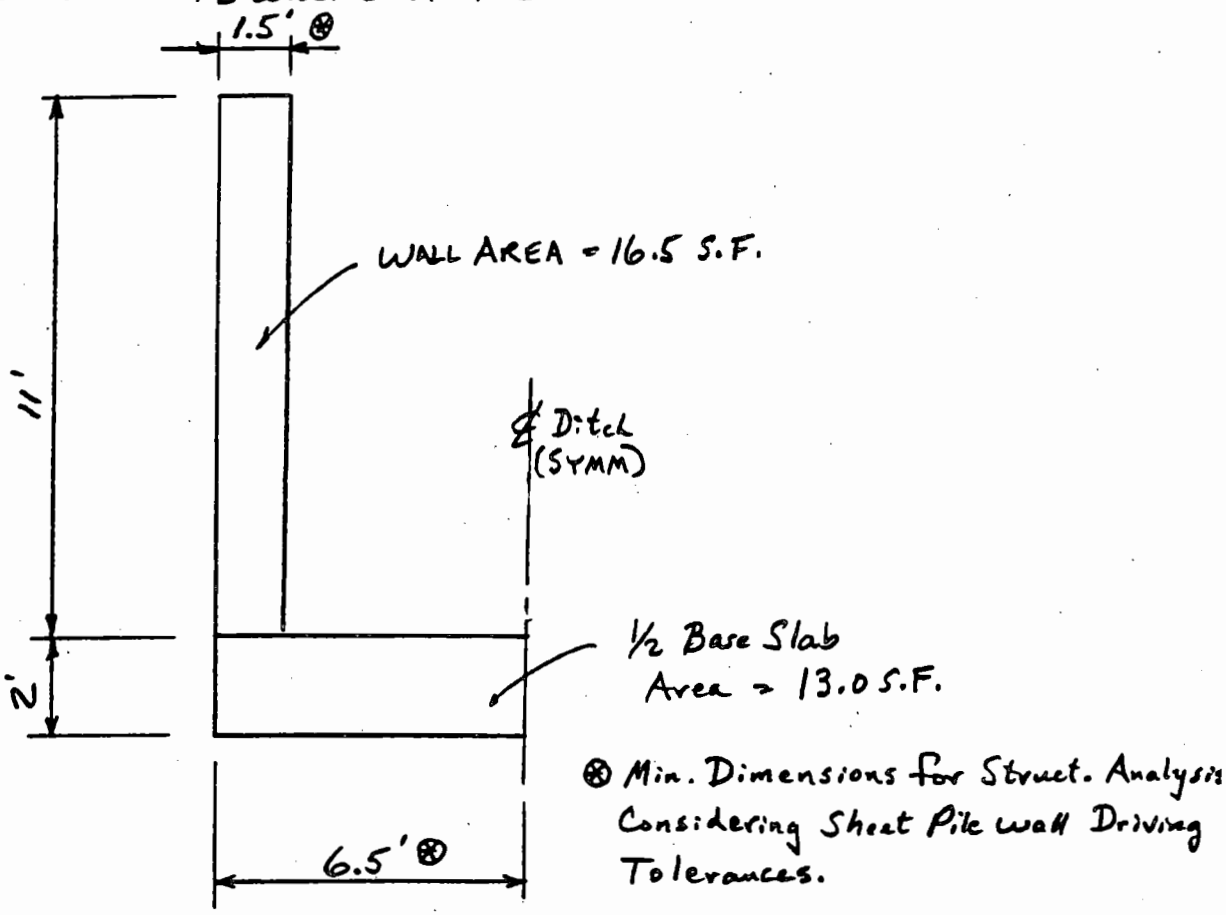

Temporarily disregarding the reinf. steel in the wall & slab (both will increase the tension in the wall concrete) and neglecting eccentricities of forces and resulting moments, our model can be reduced to a block of concrete (wall) which wants to shorten a distance "C", and another block of concrete which wants to shorten a distance = C/2 (assuming 50% of slab shrinkage took place before the wall was cast). Curing shrinkage alone will be considered here, since the concrete for slab and walls will be cast at about the same temperature.

CLIENT Sun Oil		JOB NUMBER RC-0086	
SUBJECT Expansion Joint Spacing			
BASED ON		DRAWING NUMBER	
BY J. Schmohl	CHECKED BY R DUNCAN	APPROVED BY	DATE 10/15/92

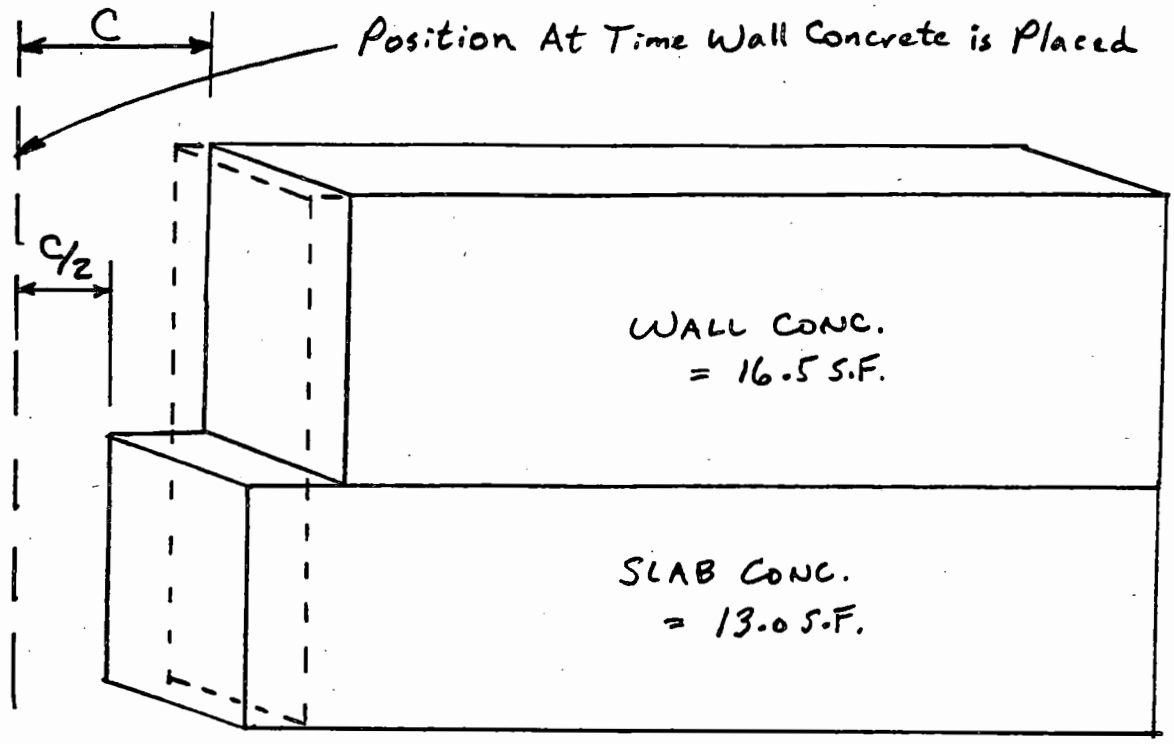

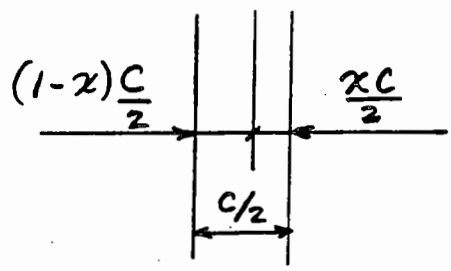

Since both blocks are concrete (without rebar for now)

$$F_{wall} = \frac{xC}{2} E_c A_{c\,wall}$$

$$F_{SLAB} = (1-x)\frac{C}{2} E_c A_{c\,SLAB}$$

Set $F_{wall} = F_{SLAB} \Rightarrow \frac{1-x}{x} = \frac{A_{c\,wall}}{A_{c\,SLAB}} = \frac{16.5}{13.0}$

or $1 - x = 1.269x$

$x = 1/2.269 = 0.44$

CLIENT Sun Oil		JOB NUMBER RC-0086	
SUBJECT Expansion Joint Spacing			
BASED ON		DRAWING NUMBER	
BY J. Schmohl	CHECKED BY R DUNCAN	APPROVED BY	DATE 10/15/92

The Conc. wall is elongated

$$\frac{\alpha C}{2} = \frac{0.44\,C}{2} = 0.22\,C \text{ per unit length}$$

So the concrete stress is

$$f_{cs} = 0.22\,C\,E_c$$

$$= 0.22(0.0002)(3.60 \times 10^{3\,ksi}) = 0.159\,ksi$$

$$= 159\,psi$$

$$< 400\,psi \quad \text{OK}$$

Note:

Check Again with Steel Rebar included after reinf. requirements have been established.

Reinforcing for Trench walls:

Force needed to deform sheetpile at expansion/contraction joint = 1.7^k (page 15)

Force needed to overcome cohesion, adhesion and friction along the outside face of the sheet piles as the sheet pile is moved thru the soil by concrete shrinkage = 10.6^k (page 18)

So the total force per foot of wall height

$$= 1.7^k + 10.6^k = 12.3^k/ft \text{ of wall height}$$

Try #5 @ 12" E.F. of wall $\Rightarrow 0.62\,in^2$

$$f_s = \frac{12.3^k}{0.62\,in^2} = 19.8\,ksi < 26.8\,ksi \text{ Allowable} \quad \text{OK}$$

CLIENT Sun Oil		JOB NUMBER RC-0086	
SUBJECT Expansion Joint Spacing			
BASED ON		DRAWING NUMBER	
BY J. Schmohl	CHECKED BY R DUNCAN	APPROVED BY	DATE 10/15/92

Reinforcing for Bottom Slab of Trench:

Wall forces from sheet pile were calculated for 1' depth @ ba of wall, 11' from top of adjacent ground line. Since the bottom slab will be placed and partially cured (shrinkage) prior to placement of wall concrete, assume the base slab acts on a band of sheet pile as shown below.

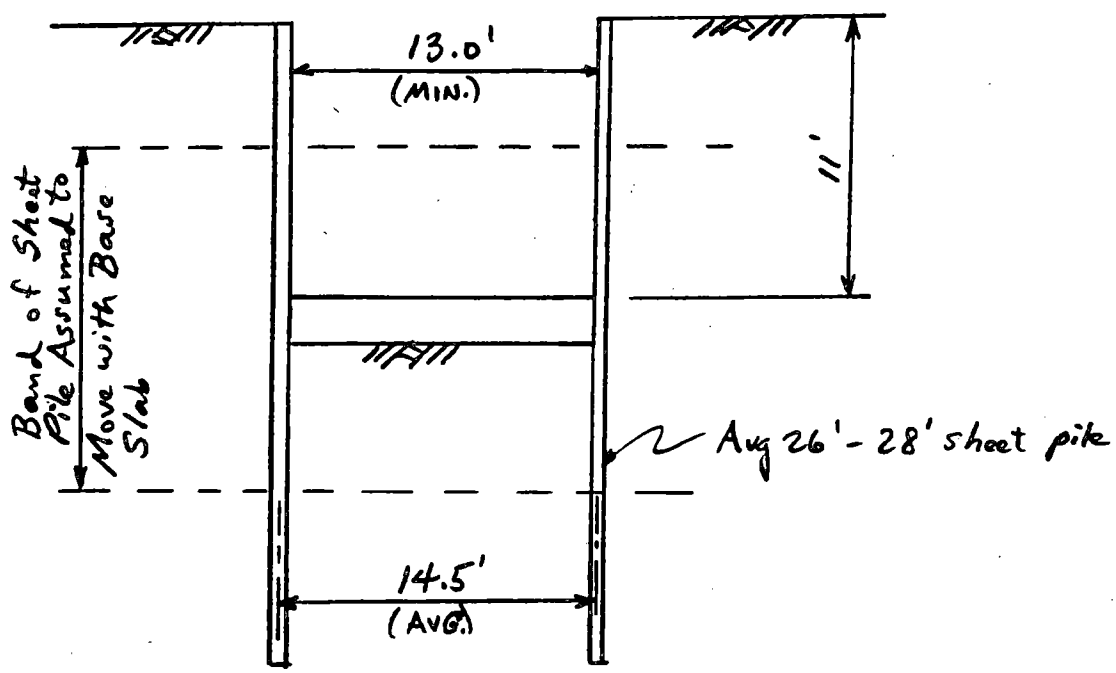

Assuming a 13' band of sheet pile, the following forces will need to be resisted by the bottom slab

Deform Sheet Pile at Expansion Joint = $2(1.7^{k}/_{ft})(13') \overset{p.15}{=}$ 44.2'

Cohesion, Adhesion & Friction @ Corrugations = $2(10.6^{k}/_{ft})(13') \overset{p.18}{=}$ 275.6'

Subgrade Drag Force = $\frac{FLW}{2}$ (~~Effective Gross~~ Average Slab width) = $8.32^{k}/_{ft}(14.5') =$ 120.6'

See p. 2

440.4'

Say Rebar @ 12" O.C. Top & Bottom ⇒ 26 bars

Force/Bar = $\frac{440.4^{k}}{26 \text{ bars}} = 16.94^{k}/\text{bar}$

#8 bars @ 12" O.C. Top & Bot

⇒ $f_s = 21.4^{ksi} < 21.6$

Say (

CLIENT Sun Oil		JOB NUMBER RC-0086	
SUBJECT Expansion Joint Spacing			
BASED ON		DRAWING NUMBER	
BY J. Schmohl	CHECKED BY TR DUNCAN	APPROVED BY	DATE 10/15/92

Provide Add'l Longitudinal Bars at Base of Wall to account for wt. of walls as it affects Subgrade Drag on Base Slab. (Ref. p. 9)

Subgrade Drag including Weight of Walls (Ref. p. 9)

$$\text{Force} = f_s A_s = \frac{\left(0.585\sqrt{\frac{60}{66}}\right)(60')(825)}{2} = 13{,}805 \text{ lb/ft}$$

Deduct Subgrade Drag Carried by bottom slab as calc. on p. 24 = (-)8,320 lb/ft

5,485 lb/ft

Half of slab width × 7.25'

39,770 lb/wall

Add'l Tension

Say $\frac{39.77^k/\text{wall}}{21.6^{ksi}} = 1.84 \text{ in}^2$ Add'l Steel Req'd / wall

Had #5 @ 12" E.F. - Say use #6 @ 12" for some height of wall

#6 = 0.44 in²/bar
#5 = 0.31
0.13 in²/bar difference

$\frac{1.84 \text{ in}^2}{0.13 \text{ in}^2/\text{bar}} = 14.2$ bars ⇒ 7' of wall w/ #6@12" X

Try #7@ 12" #7 = 0.60 in²/bar
#5 = 0.31
0.29 in²/bar diff.

$\frac{1.84 \text{ in}^2}{0.29 \text{ in}^2/\text{bar}} = 6.34$ bars Say Bottom 4' of wall w/ #7@12"

CLIENT Sun Oil		JOB NUMBER RC-0086	
SUBJECT Expansion Joint Spacing			
BASED ON		DRAWING NUMBER	
BY J. Schmohl	CHECKED BY R DUNCAN	APPROVED BY	DATE 10/15/92

Take another look at the Possibility of Vertical Cracks at the Base of the wall (as shown on page 18) now that the longitudinal steel has been determined.

With Reference to the Sketch on p. 22,

$$A_{s\,wall} = 2(4')(0.60\,in^2/ft) + 2(7')(0.31\,in^2/ft) = 4.80 + 4.34 = 9.14\,in^2$$

$$\rho_{wall} = \frac{9.14\,in^2}{11'(12''/')(18'')} = 0.0038$$

$$A_{s\,slab} = \frac{26(0.79)}{2} = \frac{20.54\,in^2}{2} = 10.27\,in^2$$

$$\rho_{slab} = \frac{10.27\,in^2}{13'(12''/')(24'')} = 0.0027$$

Try combining the reinf. steel as a third component of the model shown on page 22. That is, since the stress/strain in reinf. steel is considered linear, replace the steel in the base slab (subjected to $C/2^{\pm}$ shrinkage) with half as much steel in the wall (subjected to $C^{\pm}$ shrinkage).

As a further simplification, replace the concrete in compression in the base slab with its equivalent amount of steel.

$$A_{s\,slab(equivalent)} = 10.27\,in^2 + \frac{13.05\,F(144)}{8} = 244.27\,in^2$$

Now, converting slab steel to equivalent wall steel

$$A_{s\,wall\,(equivalent)} = 9.14\,in^2 + \frac{244.27\,in^2}{2} = 131.3\,in^2$$

This will allow direct application of PCA eq. 1) similar to page 11 calcs. except using "C" = 0.0002 (curing shrinkage only).

CLIENT Sun Oil		JOB NUMBER RC-0086	
SUBJECT Expansion Joint Spacing			
BASED ON		DRAWING NUMBER	
BY J. Schmohl	CHECKED BY R. DUNCAN	APPROVED BY	DATE 10/15/92

Without External Tension Forces (Longitudinal) on the structure,

$$f_{c_{curing}} = \frac{C E_s A_s}{A_c + n A_s} = \frac{0.0002(29\times10^3)(131.3)}{16.5\,s.f.(144) + 8(131.3)} = 0.222^k$$

$$= 222\,psi < 400\,psi \text{ (OK)}$$

Combining External Tension Forces on 11' of Wall + Base Slab (½ width)

$$T = 11'(1.7^{k/'} + 10.6^{k/'}) + 440.4^k/2$$

$$= 135.3^k + 220.2^k = 355.5^k$$

$$f_{c_{external}} = \frac{355.5^k}{16.5(144) + 8(136.4)} = 0.103\,psi = 103\,psi$$

Combined f_c = 228 psi + 103 psi = 331 psi < 400 psi (OK)

LONGITUDINAL REINFORCING:

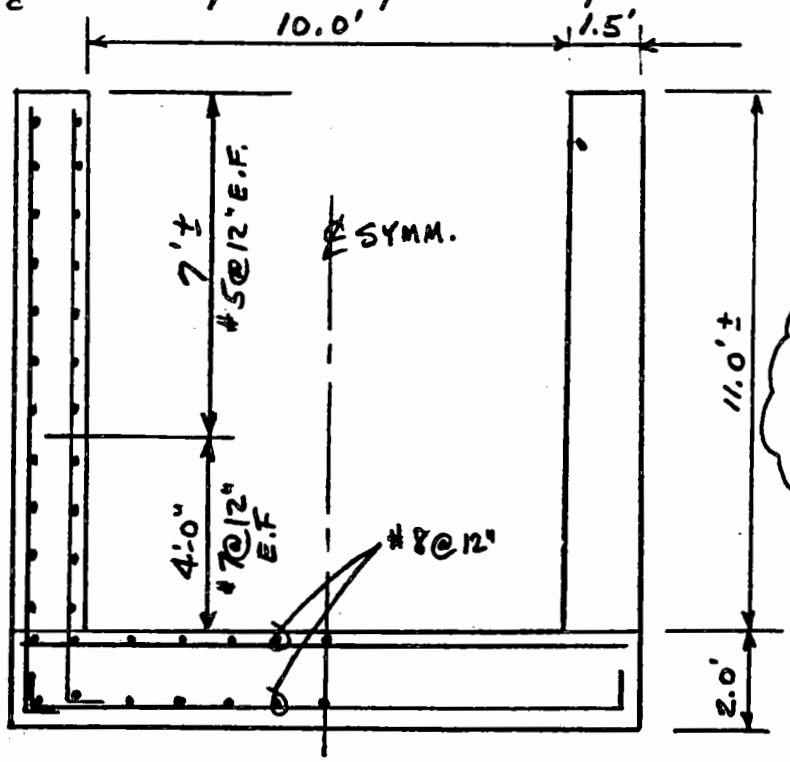

NOT FINAL - SEE p. 31d

CLIENT Sun Oil		JOB NUMBER RC-0086	
SUBJECT Expansion Joint Spacing			
BASED ON		DRAWING NUMBER	
BY J. Schmohl	CHECKED BY R DUNCAN	APPROVED BY	DATE 12/1/92

Final Calcs. for Longitudinal Reinforcing in Bottom Slab of Trench

The calcs. on pages 14 thru 27 were based on a trench wa 11' deep with a 24" thick bottom slab. Slab thicknesses have subsequently been changed, and the calcs. need to be extended to cover all design wall heights and slab thicknesses.

We will consider the various force components summarized on page 24 in order to write more generalized equations to cover the various wall height/slab thickness combinations.

Force Necessary to Deform Sheet Pile at Expansion Joint

From page 15 & 24, this force is calculated assuming PZ 27 sheet piles, a 60' joint spacing and a 13' band of sheet pile on each side of the trench assumed to move with the bottom slab. It is therefore independent of wall height, slab thickness and slab width.

Force to Deform Sheet Pile at Expansion Joint = $2(1.7\ ^{K}/_{ft})(13') = 44.$

Sheet Pile/Soil Adhesion & Cohesion due to sheet pile Corrugations

From pages 16, 17, 18 & 24, these forces are calculated assuming PZ 27 sheet piles, 300 psf soil cohesion, 75 psf adhesion of soil to steel sheet piles, a 60' joint spacing and a 13' band of sheet pile on each side of the trench assumed to move with the bottom slab They are therefore independent of wall height, slab thickness and slab width.

$$\text{Force from Cohesion \& Adhesion} = \frac{(0.56^{K/LF} + 0.08^{K/LF})(60'\text{ spacing}/2)(2\text{ walls})(13')}{3\text{ ft/corrugation}}$$

$$= 166.4^{K}$$

CLIENT Sun Oil		JOB NUMBER RC-0086	
SUBJECT Expansion Joint Spacing			
BASED ON		DRAWING NUMBER	
BY J. Schmohl	CHECKED BY R DUNCAN	APPROVED BY	DATE 12/1/92

Force from Friction of the Soil Against Soil in the Sheet Pile Corrugations and Against the Steel Flange of the Sheet Pile

These forces were calculated assuming the at-rest soil pressure for buoyed type "F Dense" fill with an equivalent fluid pressure of 42 pcf and assuming $\phi = 20°$ (Soil Report, Table 6). Forces are assumed dependent on the geometry of the PZ 27 sheet piles, a 60' joint spacing, a 13' band of sheet pile on each side of the trench assumed to move with the bottom slab, and the design wall height, "h".

Friction Force on the Soil in one corrugation per foot of wall hei

$$F_{FS} = \gamma_{fluid} \cdot h \cdot \tan\phi \cdot \text{Contact Area/Corrugation}$$

$$= 42\,pcf\,(h)(\tan 20°)\left(\frac{22\tfrac{1}{2}''}{12''/'}\right)(1\,ft)/1000 = 0.0287\,h$$

Friction Force on the Pile Flange in one corrugation/ft of wall he

$$F_{FP} = \gamma_{fluid} \cdot h \cdot \text{Friction Factor} \cdot \text{Contact Area/Corrugation}$$

bottom of p.16A

$$= 42\,pcf\,(h)(0.20)\left(\frac{13\tfrac{1}{2}''}{12''/'}\right)(1\,ft)/1000 = 0.0095\,h$$

Combining F_{FS} & F_{FP} for 60' joint spacing & 13' band each wall

$$\Sigma F_{FS} + \Sigma F_{FP} = \frac{(0.0287h + 0.0095h)(60'\text{spacing}/2)(2\text{ walls})(13')}{3\text{ ft/corrugation}}$$

So Soil Friction Forces $= 9.93\,h$

CLIENT Sun Oil		JOB NUMBER RC-0086	
SUBJECT Expansion Joint Spacing			
BASED ON		DRAWING NUMBER	
BY J. Schmohl	CHECKED BY R DUNCAN	APPROVED BY	DATE 12/1/92

Subgrade Drag Force on Bottom Slab (Ref. page 2)

Assuming 60' Joint Spacing, $L = 60'$

Friction Coefficient, $F = 0.585\sqrt{\frac{L}{T}} = 0.585\sqrt{\frac{60}{T}}$

Slab Weight, $W = 0.150\ \text{kcf}\left(\frac{T}{12''}\right) = 0.0125T\ (\text{ksf})$

Subgrade Drag Force $= \frac{FLW}{2} \cdot$ Avg. Slab Width "B"

$$= 0.585\sqrt{\frac{60}{T}} \cdot \frac{(60')(0.0125\,T)}{2} \cdot B = 1.699\sqrt{T} \cdot B$$

Set Up a Table with design wall height, trench width, slab thickness, etc. as needed to calculate longitudinal forces on bottom slabs for the various trench cross-sections. See next page.

Summarize the slab forces that are independent of design wall height, slab thickness and average slab width:

Force to Deform Sheet Pile @ Expansion Joint	= 44.2^k
Forces from Sheet Pile/Soil Adhesion & Cohesion	= 166.4
	210.6^k

Design Wall Height, "h"	Average Wall Thickness	Trench Width	Slab Thickness "T"	Average Slab Width "B"	Soil Friction Forces 9.93h	Drag Force $1.699\sqrt{T} \times B$	Other Forces on Slab	Total Slab Forces	Min. No. Slab Bars	Force Per Bar	Trial Bar Size	Computed Steel Stress
8'	2.25'	10'	24"	14.5'	79.4^k	120.7^k	210.6^k	410.7^k	28	14.67^k	#8	18.6 ksi
10'	↓	10'	27"	14.5	99.3	128.0	↓	437.9	28	15.64	#8	19.8
10'	↓	12'	36"	16.5	99.3	168.2	↓	478.1	32	14.94	#8	18.9
11.2'	↓	10'	30"	14.5	111.2	134.9	↓	456.7	28	16.31	#8	20.6
11.2'	↓	12'	39"	16.5	111.2	175.1	↓	496.9	32	15.53	#8	19.7
13.2'	2.75'	10'	27"	15.5	131.1	136.8	↓	478.5	30	15.95	#8	20.2
13.2'	2.75'	12'	33"	17.5	131.1	170.8	↓	512.5	34	15.07	#8	19.1
16.4'	3.0'	10'	30"	16.0	162.9	148.9	↓	522.4	32	16.33	#8	20.7

ACI 350R-89 Figure 2.6.7(b): Allowable Steel Stress for #8@12" is 21.6 ksi

CONCLUSION: USE #8 @ 12" LONGITUDINAL BARS TOP & BOTTOM OF ALL TRENCH SLABS

CLIENT	Sun Oil
SUBJECT	Expansion Joint Spacing
BY	J. Schmoll
CHECKED BY	R. Duncan
APPROVED BY	
DATE	12/1/92
BASED ON	
DRAWING NUMBER	
JOB NUMBER	RC-0086

CLIENT Sun Oil		JOB NUMBER RC-0086	
SUBJECT Expansion Joint Spacing			
BASED ON		DRAWING NUMBER	
BY J. Schmohl	CHECKED BY R DUNCAN	APPROVED BY	DATE 12/1/92

Long'l Reinforcement in Walls:

The basic shrinkage & temperature reinforcing calculated for walls on page 23 (#5 @12" E.F.) is (on the average) conservativ since components of force which are dependent on soil depth were figured at the base of an 11' design wall height. For the deepest trench, the design wall height is 16.4', which averages 8.2' in depth for long'l force calcs. (Use #6@12" E.F. for walls > 29"

However, add'l long'l bars should be provided at the base of walls as indicated on p. 25 to account for the weight of walls as it affects subgrade drag on the base slab.

With reference to the calcs. on pages 25 & 31:

Design Wall Height	Avg. Wall Thickness	Area (Two) Walls	Avg Slab Width "B"	Add To Slab Thickness	Actual Slab Thickness	Equivalent Slab Thickness "T"	Total Drag Force $1.699\sqrt{T} \times B$	Bottom Slab Drag Force	WALL ADDED Drag Force	ADD' WALL STEE REQ'
8'	2.25'	36.0	14.5'	29.8"	24"	53.8"	180.7^k	120.7^k	60.0^k	2.7
10'	↓	45.0	14.5'	37.2	27	64.2	197.4	128.0	69.4	3.2
10'		45.0	16.5'	32.7	36	68.7	232.3	168.2	64.1	2.9
11.2'		50.4	14.5'	41.7	30	71.7	208.6	134.9	73.7	3.4
11.2'		50.4	16.5'	36.7	39	75.7	243.9	175.1	68.8	3.1
13.2'	2.75'	72.6	15.5'	56.2	27	83.2	240.2	136.8	103.4	4.7
13.2'	2.75'	72.6	17.5'	49.8	33	82.8	270.5	170.8	99.7	4.6
16.4'	3.0'	98.4	16.0'	73.8	30	103.8	277.0	148.9	128.1	5.9

2.25' thick walls - Try #7@12" ⇒ 0.29 in²/bar over #5 bars

Worst Case $\frac{3.41\ in^2}{2\ walls\ (0.29\ in^2)}$ = 5.88 bars per wall - Say bottom 4' of wall w/#

2.75' & 3.0' walls - Try #8@12" ⇒ 0.35 in²/bar over #6 bars

Worst Case $\frac{5.93\ in^2}{2\ walls\ (0.35\ in^2)}$ = 8.47 bars per wall - Say bottom ~~5'~~ 4'-8" of wall w/#