ridgewoodenvironmental

December 7, 2015

Mr. Ray Pilapil
Manager, Permit Section
Illinois Environmental Protection Agency
Division of Air Pollution Control
1021 N. Grand Avenue East
Springfield, Illinois 62702

Re: Lifetime Operating Permit Request
General Iron Industries, Inc.
Chicago, Illinois
ID No. 031600BTB

Dear Mr. Pilapil:

On behalf of General Iron Industries, Inc. (General Iron), please allow the following correspondence and enclosed documents to serve as General Iron's formal request for a Lifetime Operating Permit. Please note that General Iron submitted a FESOP application in July 2005 and since that time the facility has been operating under a Lifetime Operating Permit. However, since submittal of the FESOP application, additional emission information has become available which demonstrates that General Iron is eligible to continue operating under a Lifetime Operating Permit based on the facility's potential-to-emit (PTE) for PM-10. Enclosed is an overview, emission test data, calculations and manufacturer documentation demonstrating that the PTE at the facility is less than major source thresholds.

Thank you for your courtesies and cooperation with this filing. Should you have any questions or require any additional information, please feel free to contact me at 847-508-9170.

Respectfully submitted,

Ridgewood Environmental

Jim Kallas

Enclosures

delivery: p.o. box 802 Highland Park Illinois 60035 phone: 847.508.9170 email: mwenv@aol.com

OVERVIEW

General Iron Industries, Inc. (General Iron) requests that a Lifetime Operating Permit be issued for its Chicago, IL facility. The enclosed documentation addresses potential emissions of PM-10 from the entire facility including the metal shredder, z-box metal separator, shredder byproduct/wire processing equipment, storage piles and vehicle traffic along with emissions from numerous conveyors and transfer points. An Emissions Summary of potential PM-10 calculations is included in Exhibit A.

Potential PM-10 emissions from the metal shredder were calculated based on particulate matter (PM) emissions testing performed at the shredder outlet prior to the cyclone and filter system for the shredder along with particle size analysis performed on the filterable particulate collected during emission testing. The average PM emission rate during testing was 13.44 pounds per hour while the shredder operated at an average process rate of 314 tons per hour. In order to obtain a PM-10 emission rate, particle size analysis was performed on the filterable PM collected during emission testing to determine the percentage of filterable PM less than 10 microns in size. The weight of filterable PM-10 was then combined with the condensable PM to obtain a PM-10 emission rate from the shredder. Results of the shredder emission testing and particle size analysis are included in Appendix A.

Potential PM-10 emissions from the shredder byproduct/wire processing equipment were calculated based on available emission test data and AP-42 emission factors utilized for similar processes. As referenced during discussions with Illinois EPA permit engineers, the subject material separation system is utilized to process a portion of nonferrous byproduct material which includes small pieces of insulated copper wire. The system includes a primary mill/shredder which reduces the size of the feedstock material thereby allowing nonferrous metal to be more easily separated from nonmetallic material. Also included as part of the system are a smaller secondary mill and numerous small conveyors, screens, magnets and density tables which all serve to assist in further separating metallic and nonmetallic materials thereby creating a more marketable finished product. The PM-10 emission rate from the metal shredder was utilized to calculate the PTE for the two (2) mills. AP-42 emission factors for Crushed Stone Processing were utilized to calculate potential PM-10 emissions from screening and transfer points. And a negligible emission rate was assigned to each of eight (8) separation devices including five (5) density tables, two (2) zigzags and one (1) process cyclone since air is the sole means of separation at each unit and all units are fully enclosed. Emission calculations for the equipment included within this system are included in Appendix B. Manufacturer documentation for the mills and density tables are included in Appendix C.

Potential emissions from the z-box metal separator were calculated based on the emission factor contained in Table D-11.A of the ISRI Title V Applicability Workbook for a Z-box Separator with Cyclone & Bleed-Off. Potential emissions from facility traffic areas, storage piles, miscellaneous conveyor transfer points were calculated based on AP-42 emission factors.

Based on anticipated system emissions, the process is not subject to regulatory requirements under New Source Review (NSR)/Prevention of Significant Deterioration (PSD) regulations, potential National Emissions Standards for Hazardous Air Pollutants (NESHAP)/Maximum Achievable Control Technology (MACT) standards, and/or Section 112(g) of the Clean Air Act (CAA). Additionally, the facility is not subject to the requirements of the Clean Air Act Permit Program (CAAPP) and/or the Emissions Reduction Market System (ERMS) Program. The proposed system also will operate in compliance with the State of Illinois regulatory requirements.

General Iron formally requests to review the draft Lifetime Operating Permit prepared by the Agency based on information provided herein and in the attached.

EXHIBIT A

EMISSIONS SUMMARY

PM-10 Emissions

Potential PM_{10} emissions were calculated for the referenced facility using actual emission test data along with published and historical emission factors considered to be the most applicable to operations at the facility.

1. Metal shredder

Potential PM_{10} emissions from the metal shredder were calculated based on Particulate Matter (PM) emission testing performed at the inlet to the cyclone and filter system associated with the shredder along with particle size analysis performed on the filterable PM collected during emission testing.

1 unit x 7.50 lbs PM_{10}/hour x 8,760 hrs/yr x 1 ton/2000 lbs = 32.85 tons/yr

2. Material Separation System

Potential PM_{10} emissions from the material separation system were calculated based on published AP-42 emission factors and assuming all PM is PM_{10}.

4.09 tons/yr (see Appendix B)

3. Shredder z-box

Potential PM_{10} emissions from the shredder z-box metal separator were calculated based on emission factors presented in the Title V Applicability Workbook prepared for the Institute of Scrap Recycling Industries.

Emissions were calculated based on the maximum process rate through the z-box, using the emission factor listed in Table D-11.A of the Title V Applicability Workbook and assuming all PM is PM_{10}.

300 tons/hr x 8,760 hrs/yr x 0.00571 lbs PM_{10}/ton x 1 ton/2000 lbs = 7.50 tons/yr

4. Fugitive Emissions from Paved Roads

Potential PM_{10} emissions from paved roads were calculated based on AP-42 emission factors contained in Chapter 13.2.1 Paved Roads.

Emissions were calculated using Equation 1 and were based on the silt loading value for Iron and Steel production facilities, the average weight per vehicle and the maximum vehicle miles traveled per year.

$E = 0.0022(9.7)^{0.91} \times (25)^{1.02}$

$E = 0.46$ lb PM_{10}/VMT

0.46 lb PM_{10}/VMT x 50,000 VMT/yr x 1 ton /2000 lbs = 11.50 tons/yr

5. Fugitive Emissions from Material Handling and Storage

Potential PM_{10} emissions from the handling and storage of materials were calculated based on AP-42 emission factors contained in Chapter 13.2.4 Aggregate Handling and Storage Piles.

Emissions were calculated using Equation 1 and were based on maximum production rates.

$E = 0.35\ (0.0032) \times (8.7/5)^{1.3}/(1.98/2)^{1.4}$

$E = 0.002$ lbs PM_{10}/ton

4,380,000 tons/yr x 0.002 lbs PM_{10}/ton x 1 ton /2000 lbs = 4.38 tons/yr

6. Conveyors

Potential PM_{10} emissions from system conveyors were calculated based on AP-42 emission factors contained in Chapter 11.19.2-2 Crushed Stone Processing and Pulverized Mineral Processing.

Emissions were calculated based on the maximum process rate at the conveyors and using the emission factor in Table 11.19-2 for Conveyor Transfer Point (controlled).

19 units x 400 tons/hr x 0.00014 lbs PM_{10}/ton x 8760 hrs/yr x 1 ton/2000 lbs = 4.66 tons/yr

62 units x 100 tons/hr x 0.00014 lbs PM_{10}/ton x 8760 hrs/yr x 1 ton/2000 lbs = 3.80 tons/yr

8.46 tons/yr

Total Potential PM_{10} Emissions

Metal Shredder	-	32.85 tons per year
Material Separation System	-	4.10 tons per year
Z-box separator	-	7.50 tons per year
Paved Roads	-	11.50 tons per year
Storage Piles	-	4.38 tons per year
Conveyors	-	8.46 tons per year
Total Potential PM_{10} Emissions	-	**68.79 tons per year**

Appendix A

STACK TEST GROUP, INC.
Air Quality Services

Particulate/PM-10 Sampling Train Calculations

Client:	General Iron
Project No:	15-2643
Date:	03/31/15
Source:	Shredder Inlet Duct

Test No:	T1	T2	T3	Avg.
Start Time:	10:05 AM	11:25 AM	12:40 PM	
Finish Time:	11:08 AM	12:30 PM	01:45 PM	
Pitot Cal. Factor:	0.84	0.84	0.84	
Meter Calibration Factor:	1.003	1.003	1.003	
Stack Length, inches:	0	0	0	
Stack Width, inches:	0	0	0	
Stack Diameter, inches:	42	42	42	
Nozzle Diameter, inches:	0.202	0.202	0.202	
Barometric Pressure, inches Hg:	29.310	29.310	29.310	
Static Pressure in Stack, Inches H2O:	-2.1	-2.4	-2.2	
Duration of Sample, minutes:	60	60	60	
Meter Start Volume:	803.75	841.84	877.00	
Meter Final Volume:	841.65	876.75	915.48	
Average Meter Pressure, Inches H2O:	1.30	1.32	1.30	1.3067
Average Meter Temperature, degrees F:	58.58	71.63	79.25	69.8
Average Sqrt. Velocity Pressure:	0.8476	0.8501	0.8462	0.8480
Stack Gas Temperature, degrees F:	82.5	86.3	86.0	84.9
% Carbon Dioxide:	0.0	0.0	0.0	0.0
% Oxygen:	20.5	20.5	20.5	20.5
% Carbon Monoxide:	0.0	0.0	0.0	0.0
Liquid Volume Collected, milliliters:	14.5	12	13.5	13.3
Total Weight of PM, (Front 1/2) Mg:	107.6	83.8	72.1	87.8
Total Weight of PM-10, (Organics) Mg:	39.1	51.6	33.9	41.5
Total Weight of PM-10, (Aqueous) Mg:	17.4	7.3	8.0	10.9

Sample Train Calculations

Meter Volume, Actual:	37.900	34.910	38.480	37.097
Meter Volume, STP:	38.022	34.168	37.122	36.437
Volume of Water Vapor Condensed:	0.683	0.565	0.635	0.628
Total Gas Sampled:	38.705	34.733	37.758	37.065
% Moisture:	1.76	1.63	1.68	1.69
Area of Stack, Square Feet:	9.62	9.62	9.62	9.62
% Excess Air at Test Location:	4200.8	4200.8	4200.8	4200.8
Molecular Weight dry, lb/lb-Mole:	28.82	28.82	28.82	28.82
Molecular Weight wet, lb/lb-Mole:	28.63	28.64	28.64	28.64
Absolute Stack Gas Pressure, in Hg:	29.16	29.13	29.15	29.15
Isokinetic, %:	103.9	93.3	101.9	99.7

Velocity and Flow Calculations

Average Stack Gas Velocity FPS:	49.07	49.40	49.14	49.20
Stack Gas Flow Rate, ACFM:	28,323	28,514	28,364	28,400
Stack Gas Flow Rate, SCFM:	26,866	26,833	26,721	26,807
Stack Gas Flow Rate, DSCF/HR:	1,583,588	1,583,757	1,576,308	1,581,217
Stack Gas Flow Rate, DSCFM:	26,393	26,396	26,272	26,354

Front 1/2 Particulate Calculations (Filterable):

Grains Per DSCF:	0.0437	0.0378	0.0300	0.0372
LBS/DSCF:	6.24E-06	5.41E-06	4.28E-06	5.31E-06
LBS/HR:	9.88	8.56	6.75	8.40

Organics (Condensable):

Grains Per DSCF:	0.0159	0.0233	0.0141	0.0178
LBS/DSCF:	2.27E-06	3.33E-06	2.01E-06	2.54E-06
LBS/HR:	3.59	5.27	3.17	4.01

Aqueos (Condensable):

Grains Per DSCF:	0.0071	0.0033	0.0033	0.0046

LBS/DSCF:	1.01E-06	4.71E-07	4.75E-07	6.52E-07
LBS/HR:	1.60	0.75	0.75	1.03

Total Particulate (Filterable & Condensable):

Grains Per DSCF:	0.0666	0.0644	0.0474	0.0595
LBS/DSCF:	9.52E-06	9.21E-06	6.77E-06	8.50E-06
LBS/HR:	15.07	14.58	10.67	13.44

Particle Technology Labs

555 Rogers Street, Downers Grove, IL 60515
630-969-2703 ph 630-969-2745 fx
www.particletechlabs.com

THE PARTICLE EXPERTS

INTERPRETING YOUR MALVERN FINE PARTICLE ANALYSIS

INTRODUCTION

The particle size analysis of your sample(s) has been conducted on a Malvern® MasterSizer LASER diffractor. This instrument is considered an ensemble analyzer that calculates a volume distribution from the LASER (**L**ight **A**mplification by **S**timulated **E**mission of **R**adiation) diffraction pattern of a suspension of particles. This raw scatter data are then processed using a complex algorithm and presented on the basis of **EQUIVALENT SPHERICAL DIAMETER**. The Malvern equipment currently in use at Particle Technology Labs (PTL) are the *MasterSizer S*, the *MasterSizer 2000, and the MasterSizer 3000.*

THE DATA

The header section contains various user-entered information including client name, sample identification, and analysis notes. Each project submitted to PTL is given a unique seven digit code (PTL Project #) which can be found on these data pages, although its location is dependent on the instrumentation used. On the MasterSizer S data, the PTL Project # is identified as Sample File. On the MasterSizer 2000 and 3000 data, the PTL Project # appears at the bottom of the page and is identified as File Name or within the File. Please refer to this PTL Project # when contacting us with any questions regarding the analysis.

The data output also provides the parameters specific to the instrument being used, as well as the parameters specific to the analysis. The optical model (composed of the sample's refractive index as well as the imaginary absorption value) is required if determining the particle size using Mie theory. This theory can be used on any size particles, but is specifically recommended over the use of the Fraunhofer approximation according to ISO 13320:2009 for material in the size region less than approximately 5 µm. Please note that, unless otherwise requested or provided by the client, the analysis of an unknown material is generally conducted using the standard instrument default optical values as detailed below.

SYSTEM DEFAULT VALUES

Settings	MASTERSIZER S	MASTERSIZER 2000 / MASTERSIZER 3000	
	Wet	Wet	Dry
Analysis Model	Polydisperse	General Purpose	General Purpose
Presentation	30HD	Default	Default
Sample RI Value	1.5295	1.520	1.520

The Fraunhofer approximation, which does not require specific knowledge of the optical properties of the sample, can be applied for large particles if a known refractive index of the material is not available or the sample is composed of multiple components. If the actual RI of the sample material is provided at a later date, the raw data can be recalculated to adjust for the refractive index.

Please note the following commonly reported values when reviewing your data:

- **TABULATED DATA:** ALWAYS appears as a Cumulative % less than (*Volume Under %*) unless otherwise requested.
- **SPAN:** Value related to the width of the curve, expressed as $\frac{[D(v,0.90) - D(v,0.10)]}{D(v,0.50)}$
- **D[3,2]:** Surface-weighted mean diameter (Sauter diameter)
- **D[4,3]:** Volume-weighted MEAN
- **10%, 50%, 90% size values:** Indicates the size median which 10%, 50%, or 90% of the particles within the distribution is smaller than (example: D(0.9): 140 µm, this means that 90% of the particulate is smaller than 140 µm on a volume basis).
- **Specific Surface Area:** If a calculated Specific Surface Area value is reported, consider this value only as an approximate surface area since calculations are based upon **non-porous spheres**. It is not a replacement for a result produced from an actual gas adsorption instrument due to the above assumption.

Also included is the Particle Size Distribution DIFFERENTIAL HISTOGRAM. This histogram shows the Tabulated Data as a **Differential Volume Percent Less Than Indicated Size.** Please note that the histograms for the *MasterSizer S* and *MasterSizer 3000* also generally include a CUMULATIVE Curve representative of the Tabulated Data.

For additional questions specific to your sample results, please contact us directly.

GI000012

Malvern 3000 Liquid Analysis (v.1)

Particle Technology Labs

Created by: pdenight
Last edited: 3/30/2015 3:11:39 PM

Information

Client	STACK TEST GROUP, INC.	**Sample Name**	General Iron
Test Method		**Sample ID**	Particulate Filter T1 and Probe Rinse T1
Chemist	EF	**PTL ID**	207161-26, 207162-26
SOP File Name	HydroMV.cfg	**Measurement Date Time**	4/28/2015 11:39:39 AM
Carrier	Aqueous	**Instrument Type**	Mastersizer3000
Notes			

Measurement Details

Particle Name	Default Malvern (1)	**Dispersant Name**	Water
Particle Refractive Index	1.520	**Dispersant Refractive Index**	1.330
Particle Absorption Index	1.000	**Analysis Model**	General Purpose
Laser Power	78.47 %	**Analysis Sensitivity**	Normal
Accessory Name	Hydro MV	**Accessory Serial No.**	MAL1090246
Laser Obscuration	11.21 %	**Instrument Serial No.**	MAL1087829
Virtual Lens Range		**Software Version**	3.0.1402.140
Is Particle Fraunhofer?	No	**Are particles non-spherical?**	Yes

Analysis Results

Dv (10)	3.74 µm	**Span**	14.825
Dv (50)	32.4 µm	**D [4,3]**	135 µm
Dv (90)	484 µm	**Weighted Residual**	0.17 %

Frequency (compatible) and Undersize

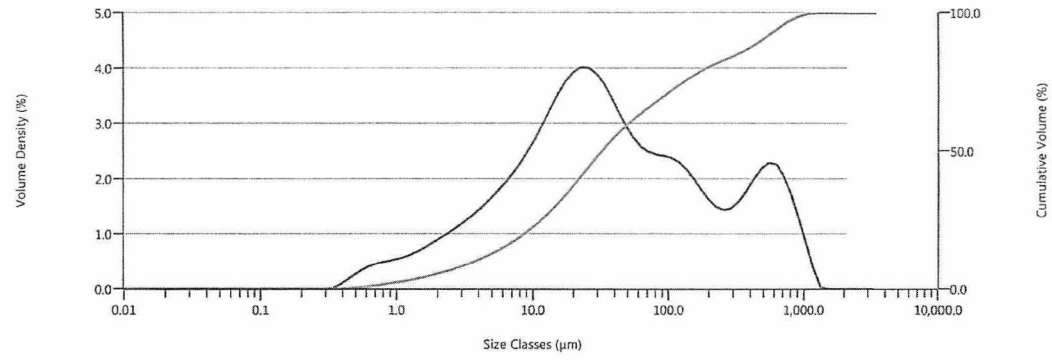

Measurement Details

File Path	R:\Malvern 3000\Measurement Data\32784-26.mmes		
Record Number	1	**Average Result Records**	
Operator Name	efitzgerald	**Original Record Number**	1

Measurement Details

Chemist Signature	EF 2015-04-28	**Reviewer Signature**	HZ 2015-04-29

Malvern

GI0000013

Measurement Details

Client	STACK TEST GROUP, INC.	**Sample Name**	General Iron
Test Method		**Sample ID**	Particulate Filter T1 and Probe Rinse T1
Chemist	EF	**PTL ID**	207161-26, 207162-26
SOP File Name	HydroMV.cfg	**Measurement Date Time**	4/28/2015 11:39:39 AM
Carrier	Aqueous		
Notes			

Measurement Details

Particle Name	Default Malvern (1)	**Dispersant Name**	Water
Particle Refractive Index	1.520	**Dispersant Refractive Index**	1.330
Particle Absorption Index	1.000	**Analysis Model**	General Purpose
Laser Power	78.47 %	**Analysis Sensitivity**	Normal
Accessory Name	Hydro MV	**Accessory Serial No.**	MAL1090246
Instrument Type	Mastersizer3000	**Instrument Serial No.**	MAL1087829
Virtual Lens Range		**Software Version**	3.0.1402.140
Weighted Residual	0.17 %	**Are particles non-spherical?**	Yes
Is Particle Fraunhofer?	No	**Original Record Number**	1

Size (µm)	% Volume Under	Size (µm)	% Volume Under	Size (µm)	% Volume Under	Size (µm)	% Volume Under	Size (µm)	% Volume Under	Size (µm)	% Volume Under
0.0100	0.00	0.0876	0.00	0.767	1.43	6.72	16.40	58.9	62.43	516	90.90
0.0114	0.00	0.0995	0.00	0.872	1.85	7.64	18.16	66.9	64.58	586	92.82
0.0129	0.00	0.113	0.00	0.991	2.28	8.68	20.07	76.0	66.64	666	94.72
0.0147	0.00	0.128	0.00	1.13	2.74	9.86	22.15	86.4	68.68	756	96.45
0.0167	0.00	0.146	0.00	1.28	3.24	11.2	24.44	98.1	70.69	859	97.90
0.0189	0.00	0.166	0.00	1.45	3.78	12.7	26.94	111	72.67	976	98.99
0.0215	0.00	0.188	0.00	1.65	4.39	14.5	29.67	127	74.60	1110	99.69
0.0244	0.00	0.214	0.00	1.88	5.07	16.4	32.61	144	76.42	1260	100.00
0.0278	0.00	0.243	0.00	2.13	5.81	18.7	35.75	163	78.09	1430	100.00
0.0315	0.00	0.276	0.00	2.42	6.63	21.2	39.03	186	79.60	1630	100.00
0.0358	0.00	0.314	0.00	2.75	7.52	24.1	42.38	211	80.96	1850	100.00
0.0407	0.00	0.357	0.00	3.12	8.48	27.4	45.73	240	82.20	2100	100.00
0.0463	0.00	0.405	0.07	3.55	9.54	31.1	49.00	272	83.39	2390	100.00
0.0526	0.00	0.460	0.20	4.03	10.68	35.3	52.11	310	84.61	2710	100.00
0.0597	0.00	0.523	0.42	4.58	11.94	40.1	55.01	352	85.94	3080	100.00
0.0679	0.00	0.594	0.70	5.21	13.30	45.6	57.69	400	87.41	3500	100.00
0.0771	0.00	0.675	1.05	5.92	14.79	51.8	60.15	454	89.08		

Measurement Details

File Path	R:\Malvern 3000\Measurement Data\32784-26.mmes	
Record Number	1	**Average Result Records**
Operator Name	efitzgerald	

Measurement Details

Chemist Signature EF 2015-04-28 **Reviewer Signature** HA 2015-04-29

Annotation

Particle Technology Labs 555 Rogers Street Downers Grove, IL 60515

Record Number	Sample Name	Signature State	Signatory	Signature Date
1	General Iron	Unsigned		

Malvern

GI0000014

Malvern 3000 Liquid Analysis (v.1)

Particle Technology Labs

Created by: pdenight
Last edited: 3/30/2015 3:11:39 PM

Information

Client	STACK TEST GROUP, INC.	**Sample Name**	General Iron
Test Method		**Sample ID**	Particulate Filter T1 and Probe Rinse T1
Chemist	EF	**PTL ID**	207161-26, 207162-26
SOP File Name	HydroMV.cfg	**Measurement Date Time**	4/28/2015 11:40:41 AM
Carrier	Aqueous	**Instrument Type**	Mastersizer3000
Notes			

Measurement Details

Particle Name	Default Malvern (1)	**Dispersant Name**	Water
Particle Refractive Index	1.520	**Dispersant Refractive Index**	1.330
Particle Absorption Index	1.000	**Analysis Model**	General Purpose
Laser Power	78.47 %	**Analysis Sensitivity**	Normal
Accessory Name	Hydro MV	**Accessory Serial No.**	MAL1090246
Laser Obscuration	11.31 %	**Instrument Serial No.**	MAL1087829
Virtual Lens Range		**Software Version**	3.0.1402.140
Is Particle Fraunhofer?	No	**Are particles non-spherical?**	Yes

Analysis Results

Dv (10)	3.22 µm	**Span**	13.903
Dv (50)	27.9 µm	**D [4,3]**	113 µm
Dv (90)	391 µm	**Weighted Residual**	0.21 %

Frequency (compatible) and Undersize

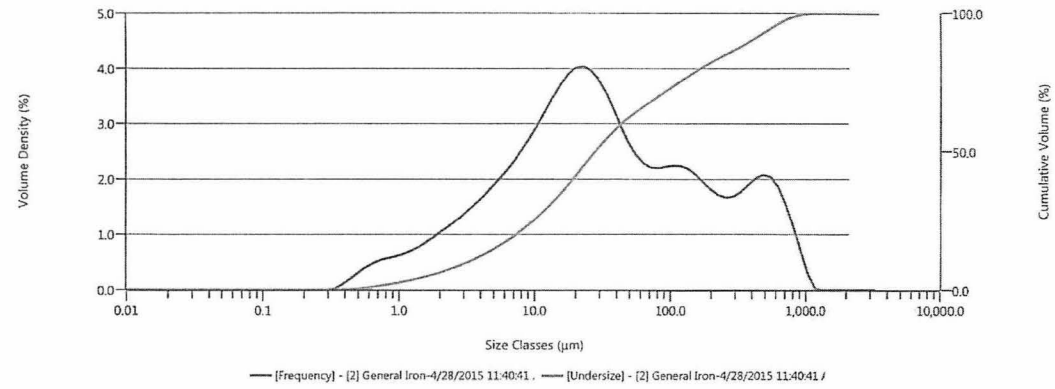

Measurement Details

File Path	R:\Malvern 3000\Measurement Data\32784-26.mmes		
Record Number	2	**Average Result Records**	
Operator Name	efitzgerald	**Original Record Number**	2

Measurement Details

Chemist Signature	EF 2015-04-28	**Reviewer Signature**	[illegible] 2015-04-29

Malvern

GI0000015

Measurement Details

Client	STACK TEST GROUP, INC.	**Sample Name**	General Iron
Test Method		**Sample ID**	Particulate Filter T1 and Probe Rinse T1
Chemist	EF	**PTL ID**	207161-26, 207162-26
SOP File Name	HydroMV.cfg	**Measurement Date Time**	4/28/2015 11:40:41 AM
Carrier	Aqueous		
Notes			

Measurement Details

Particle Name	Default Malvern (1)	**Dispersant Name**	Water
Particle Refractive Index	1.520	**Dispersant Refractive Index**	1.330
Particle Absorption Index	1.000	**Analysis Model**	General Purpose
Laser Power	78.47 %	**Analysis Sensitivity**	Normal
Accessory Name	Hydro MV	**Accessory Serial No.**	MAL1090246
Instrument Type	Mastersizer3000	**Instrument Serial No.**	MAL1087829
Virtual Lens Range		**Software Version**	3.0.1402.140
Weighted Residual	0.21 %	**Are particles non-spherical?**	Yes
Is Particle Fraunhofer?	No	**Original Record Number**	2

Size (µm)	% Volume Under	Size (µm)	% Volume Under	Size (µm)	% Volume Under	Size (µm)	% Volume Under	Size (µm)	% Volume Under	Size (µm)	% Volume Under
0.0100	0.00	0.0876	0.00	0.767	1.62	6.72	18.72	58.9	65.13	516	93.69
0.0114	0.00	0.0995	0.00	0.872	2.09	7.64	20.68	66.9	67.03	586	95.40
0.0129	0.00	0.113	0.00	0.991	2.58	8.68	22.79	76.0	68.87	666	96.96
0.0147	0.00	0.128	0.00	1.13	3.11	9.86	25.08	86.4	70.70	756	98.25
0.0167	0.00	0.146	0.00	1.28	3.68	11.2	27.56	98.1	72.55	859	99.20
0.0189	0.00	0.166	0.00	1.45	4.30	12.7	30.24	111	74.42	976	99.78
0.0215	0.00	0.188	0.00	1.65	5.00	14.5	33.14	127	76.29	1110	100.00
0.0244	0.00	0.214	0.00	1.88	5.77	16.4	36.23	144	78.11	1260	100.00
0.0278	0.00	0.243	0.00	2.13	6.63	18.7	39.47	163	79.85	1430	100.00
0.0315	0.00	0.276	0.00	2.42	7.57	21.2	42.82	186	81.48	1630	100.00
0.0358	0.00	0.314	0.00	2.75	8.60	24.1	46.20	211	82.99	1850	100.00
0.0407	0.00	0.357	0.00	3.12	9.71	27.4	49.52	240	84.42	2100	100.00
0.0463	0.00	0.405	0.07	3.55	10.92	31.1	52.70	272	85.80	2390	100.00
0.0526	0.00	0.460	0.23	4.03	12.24	35.3	55.68	310	87.20	2710	100.00
0.0597	0.00	0.523	0.47	4.58	13.67	40.1	58.40	352	88.68	3080	100.00
0.0679	0.00	0.594	0.80	5.21	15.22	45.6	60.87	400	90.26	3500	100.00
0.0771	0.00	0.675	1.19	5.92	16.90	51.8	63.09	454	91.94		

Measurement Details

File Path	R:\Malvern 3000\Measurement Data\32784-26.mmes	
Record Number	2	**Average Result Records**
Operator Name	efitzgerald	

Measurement Details

Chemist Signature EF 2015-04-28 **Reviewer Signature** HG 2015-04-29

Annotation

Particle Technology Labs 555 Rogers Street Downers Grove, IL 60515

Record Number	Sample Name	Signature State	Signatory	Signature Date
2	General Iron	Unsigned		

Malvern

GI000016

Malvern 3000 Liquid Analysis (v.1)

Particle Technology Labs

Created by: pdenight
Last edited: 3/30/2015 3:11:39 PM

Information

Client	STACK TEST GROUP, INC.	**Sample Name**	General Iron
Test Method		**Sample ID**	Particulate Filter T1 and Probe Rinse T1
Chemist	EF	**PTL ID**	207161-26, 207162-26
SOP File Name	HydroMV.cfg	**Measurement Date Time**	4/28/2015 11:41:43 AM
Carrier	Aqueous	**Instrument Type**	Mastersizer3000
Notes			

Measurement Details

Particle Name	Default Malvern (1)	**Dispersant Name**	Water
Particle Refractive Index	1.520	**Dispersant Refractive Index**	1.330
Particle Absorption Index	1.000	**Analysis Model**	General Purpose
Laser Power	78.47 %	**Analysis Sensitivity**	Normal
Accessory Name	Hydro MV	**Accessory Serial No.**	MAL1090246
Laser Obscuration	11.31 %	**Instrument Serial No.**	MAL1087829
Virtual Lens Range		**Software Version**	3.0.1402.140
Is Particle Fraunhofer?	No	**Are particles non-spherical?**	Yes

Analysis Results

Dv (10)	2.93 µm	**Span**	14.086
Dv (50)	25.2 µm	**D [4,3]**	102 µm
Dv (90)	357 µm	**Weighted Residual**	0.23 %

Frequency (compatible) and Undersize

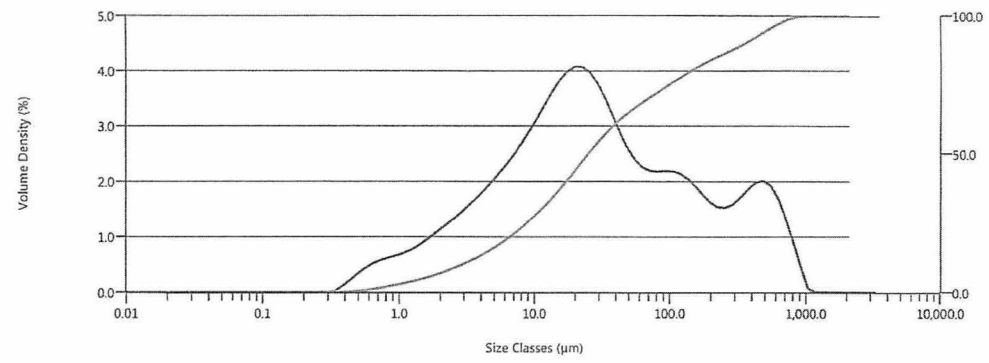

Measurement Details

File Path	R:\Malvern 3000\Measurement Data\32784-26.mmes		
Record Number	3	**Average Result Records**	
Operator Name	efitzgerald	**Original Record Number**	3

Measurement Details

Chemist Signature EF 2015-04-28 **Reviewer Signature** MR 2015-04-29

Malvern

GI0000017

GI0000018

Measurement Details

Client	STACK TEST GROUP, INC.	**Sample Name**	General Iron
Test Method		**Sample ID**	Particulate Filter T1 and Probe Rinse T1
Chemist	EF	**PTL ID**	207161-26, 207162-26
SOP File Name	HydroMV.cfg	**Measurement Date Time**	4/28/2015 11:41:43 AM
Carrier	Aqueous		
Notes			

Measurement Details

Particle Name	Default Malvern (1)	**Dispersant Name**	Water
Particle Refractive Index	1.520	**Dispersant Refractive Index**	1.330
Particle Absorption Index	1.000	**Analysis Model**	General Purpose
Laser Power	78.47 %	**Analysis Sensitivity**	Normal
Accessory Name	Hydro MV	**Accessory Serial No.**	MAL1090246
Instrument Type	Mastersizer3000	**Instrument Serial No.**	MAL1087829
Virtual Lens Range		**Software Version**	3.0.1402.140
Weighted Residual	0.23 %	**Are particles non-spherical?**	Yes
Is Particle Fraunhofer?	No	**Original Record Number**	3

Size (µm)	% Volume Under	Size (µm)	% Volume Under	Size (µm)	% Volume Under	Size (µm)	% Volume Under	Size (µm)	% Volume Under	Size (µm)	% Volume Under
0.0100	0.00	0.0876	0.00	0.767	1.77	6.72	20.32	58.9	67.47	516	94.68
0.0114	0.00	0.0995	0.00	0.872	2.27	7.64	22.41	66.9	69.35	586	96.30
0.0129	0.00	0.113	0.00	0.991	2.81	8.68	24.66	76.0	71.17	666	97.72
0.0147	0.00	0.128	0.00	1.13	3.38	9.86	27.08	86.4	72.98	756	98.84
0.0167	0.00	0.146	0.00	1.28	4.00	11.2	29.69	98.1	74.81	859	99.59
0.0189	0.00	0.166	0.00	1.45	4.69	12.7	32.51	111	76.63	976	99.98
0.0215	0.00	0.188	0.00	1.65	5.45	14.5	35.52	127	78.42	1110	100.00
0.0244	0.00	0.214	0.00	1.88	6.30	16.4	38.72	144	80.12	1260	100.00
0.0278	0.00	0.243	0.00	2.13	7.24	18.7	42.05	163	81.72	1430	100.00
0.0315	0.00	0.276	0.00	2.42	8.27	21.2	45.46	186	83.18	1630	100.00
0.0358	0.00	0.314	0.00	2.75	9.39	24.1	48.86	211	84.53	1850	100.00
0.0407	0.00	0.357	0.00	3.12	10.60	27.4	52.18	240	85.80	2100	100.00
0.0463	0.00	0.405	0.08	3.55	11.92	31.1	55.33	272	87.07	2390	100.00
0.0526	0.00	0.460	0.25	4.03	13.35	35.3	58.26	310	88.38	2710	100.00
0.0597	0.00	0.523	0.51	4.58	14.89	40.1	60.92	352	89.80	3080	100.00
0.0679	0.00	0.594	0.87	5.21	16.57	45.6	63.32	400	91.35	3500	100.00
0.0771	0.00	0.675	1.29	5.92	18.37	51.8	65.49	454	93.00		

Measurement Details

File Path	R:\Malvern 3000\Measurement Data\32784-26.mmes		
Record Number	3	**Average Result Records**	
Operator Name	efitzgerald		

Measurement Details

Chemist Signature	EF 2015-04-28	**Reviewer Signature**	HG 2015-04-29

Annotation

Particle Technology Labs 555 Rogers Street Downers Grove, IL 60515

Record Number	Sample Name	Signature State	Signatory	Signature Date
3	General Iron	Unsigned		

Malvern

Malvern 3000 Liquid Analysis (v.1)

Particle Technology Labs

Created by: pdenight
Last edited: 3/30/2015 3:11:39 PM

Information

Client	STACK TEST GROUP, INC.	**Sample Name**	General Iron
Test Method		**Sample ID**	Particulate Filter T1 and Probe Rinse T1
Chemist	EF	**PTL ID**	207161-26, 207162-26
SOP File Name	HydroMV.cfg	**Measurement Date Time**	4/28/2015 11:42:46 AM
Carrier	Aqueous	**Instrument Type**	Mastersizer3000
Notes			

Measurement Details

Particle Name	Default Malvern (1)	**Dispersant Name**	Water
Particle Refractive Index	1.520	**Dispersant Refractive Index**	1.330
Particle Absorption Index	1.000	**Analysis Model**	General Purpose
Laser Power	78.47 %	**Analysis Sensitivity**	Normal
Accessory Name	Hydro MV	**Accessory Serial No.**	MAL1090246
Laser Obscuration	11.30 %	**Instrument Serial No.**	MAL1087829
Virtual Lens Range		**Software Version**	3.0.1402.140
Is Particle Fraunhofer?	No	**Are particles non-spherical?**	Yes

Analysis Results

Dv (10)	2.78 µm	**Span**	13.500
Dv (50)	23.8 µm	**D [4,3]**	95.4 µm
Dv (90)	325 µm	**Weighted Residual**	0.23 %

Frequency (compatible) and Undersize

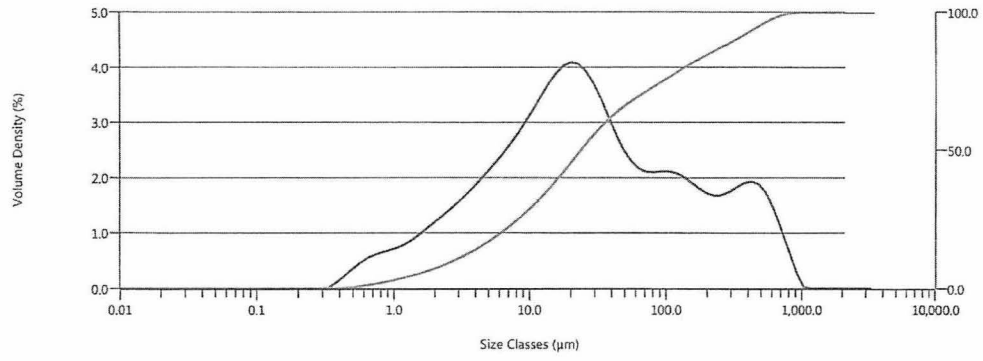

[Frequency] - [4] General Iron-4/28/2015 11:42:46 , [Undersize] - [4] General Iron-4/28/2015 11:42:46 /

Measurement Details

File Path	R:\Malvern 3000\Measurement Data\32784-26.mmes		
Record Number	4	**Average Result Records**	
Operator Name	efitzgerald	**Original Record Number**	4

Measurement Details

Chemist Signature EF 2015-04-28 **Reviewer Signature** HG 2015-04-29

Malvern

GI0000019

Measurement Details

Client	STACK TEST GROUP, INC.	**Sample Name**	General Iron
Test Method		**Sample ID**	Particulate Filter T1 and Probe Rinse T1
Chemist	EF	**PTL ID**	207161-26, 207162-26
SOP File Name	HydroMV.cfg	**Measurement Date Time**	4/28/2015 11:42:46 AM
Carrier	Aqueous		
Notes			

Measurement Details

Particle Name	Default Malvern (1)	**Dispersant Name**	Water
Particle Refractive Index	1.520	**Dispersant Refractive Index**	1.330
Particle Absorption Index	1.000	**Analysis Model**	General Purpose
Laser Power	78.47 %	**Analysis Sensitivity**	Normal
Accessory Name	Hydro MV	**Accessory Serial No.**	MAL1090246
Instrument Type	Mastersizer3000	**Instrument Serial No.**	MAL1087829
Virtual Lens Range		**Software Version**	3.0.1402.140
Weighted Residual	0.23 %	**Are particles non-spherical?**	Yes
Is Particle Fraunhofer?	No	**Original Record Number**	4

Size (µm)	% Volume Under	Size (µm)	% Volume Under	Size (µm)	% Volume Under	Size (µm)	% Volume Under	Size (µm)	% Volume Under	Size (µm)	% Volume Under
0.0100	0.00	0.0876	0.00	0.767	1.86	6.72	21.31	58.9	68.45	516	95.72
0.0114	0.00	0.0995	0.00	0.872	2.39	7.64	23.47	66.9	70.25	586	97.15
0.0129	0.00	0.113	0.00	0.991	2.96	8.68	25.79	76.0	71.99	666	98.34
0.0147	0.00	0.128	0.00	1.13	3.56	9.86	28.28	86.4	73.74	756	99.22
0.0167	0.00	0.146	0.00	1.28	4.21	11.2	30.95	98.1	75.50	859	99.78
0.0189	0.00	0.166	0.00	1.45	4.93	12.7	33.82	111	77.26	976	100.00
0.0215	0.00	0.188	0.00	1.65	5.74	14.5	36.89	127	79.00	1110	100.00
0.0244	0.00	0.214	0.00	1.88	6.63	16.4	40.12	144	80.67	1260	100.00
0.0278	0.00	0.243	0.00	2.13	7.62	18.7	43.47	163	82.27	1430	100.00
0.0315	0.00	0.276	0.00	2.42	8.71	21.2	46.89	186	83.77	1630	100.00
0.0358	0.00	0.314	0.00	2.75	9.89	24.1	50.28	211	85.20	1850	100.00
0.0407	0.00	0.357	0.00	3.12	11.17	27.4	53.57	240	86.59	2100	100.00
0.0463	0.00	0.405	0.09	3.55	12.55	31.1	56.67	272	87.99	2390	100.00
0.0526	0.00	0.460	0.26	4.03	14.05	35.3	59.53	310	89.43	2710	100.00
0.0597	0.00	0.523	0.54	4.58	15.67	40.1	62.13	352	90.95	3080	100.00
0.0679	0.00	0.594	0.91	5.21	17.42	45.6	64.45	400	92.54	3500	100.00
0.0771	0.00	0.675	1.36	5.92	19.30	51.8	66.54	454	94.15		

Measurement Details

File Path	R:\Malvern 3000\Measurement Data\32784-26.mmes	
Record Number	4	**Average Result Records**
Operator Name	efitzgerald	

Measurement Details

Chemist Signature EF 2015-04-28 **Reviewer Signature** [illegible] 2015-04-29

Annotation

Particle Technology Labs 555 Rogers Street Downers Grove, IL 60515

Record Number	Sample Name	Signature State	Signatory	Signature Date
4	General Iron	Unsigned		

Malvern

GI0000020

Malvern 3000 Liquid Analysis (v.1)

Particle Technology Labs

Created by: pdenight
Last edited: 3/30/2015 3:11:39 PM

Information

Client	STACK TEST GROUP, INC.	**Sample Name**	Average of 'General Iron'
Test Method		**Sample ID**	Particulate Filter T1 and Probe Rinse T1
Chemist	EF	**PTL ID**	207161-26, 207162-26
SOP File Name	HydroMV.cfg	**Measurement Date Time**	4/28/2015 11:39:39 AM
Carrier	Aqueous	**Instrument Type**	Mastersizer3000
Notes			

Measurement Details

Particle Name	Default Malvern (1)	**Dispersant Name**	Water
Particle Refractive Index	1.520	**Dispersant Refractive Index**	1.330
Particle Absorption Index	1.000	**Analysis Model**	General Purpose
Laser Power	78.47 %	**Analysis Sensitivity**	Normal
Accessory Name	Hydro MV	**Accessory Serial No.**	MAL1090246
Laser Obscuration	11.28 %	**Instrument Serial No.**	MAL1087829
Virtual Lens Range		**Software Version**	3.0.1402.140
Is Particle Fraunhofer?	No	**Are particles non-spherical?**	Yes

Analysis Results

Dv (10)	3.13 µm	**Span**	14.155
Dv (50)	27.1 µm	**D [4,3]**	112 µm
Dv (90)	387 µm	**Weighted Residual**	0.21 %

Frequency (compatible) and Undersize

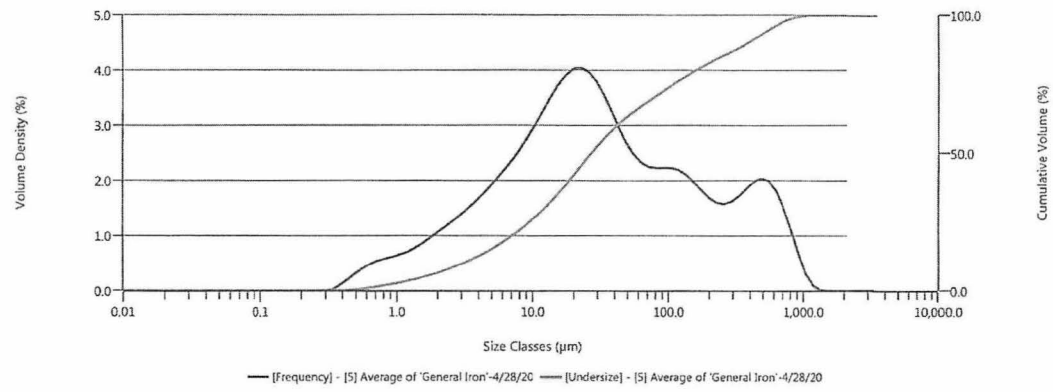

Measurement Details

File Path	R:\Malvern 3000\Measurement Data\32784-26.mmes		
Record Number	5	**Average Result Records**	1, 2, 3, 4
Operator Name	efitzgerald	**Original Record Number**	5

Measurement Details

Chemist Signature EF 2015-04-28 **Reviewer Signature** [illegible] 2015-04-29

Malvern

GI0000021

Measurement Details

Client STACK TEST GROUP, INC.
Test Method
Chemist EF
SOP File Name HydroMV.cfg
Carrier Aqueous
Notes

Sample Name Average of 'General Iron'
Sample ID Particulate Filter T1 and Probe Rinse T1
PTL ID 207161-26, 207162-26
Measurement Date Time 4/28/2015 11:39:39 AM

Measurement Details

Particle Name Default Malvern (1)
Particle Refractive Index 1.520
Particle Absorption Index 1.000
Laser Power 78.47 %
Accessory Name Hydro MV
Instrument Type Mastersizer3000
Virtual Lens Range
Weighted Residual 0.21 %
Is Particle Fraunhofer? No

Dispersant Name Water
Dispersant Refractive Index 1.330
Analysis Model General Purpose
Analysis Sensitivity Normal
Accessory Serial No. MAL1090246
Instrument Serial No. MAL1087829
Software Version 3.0.1402.140
Are particles non-spherical? Yes
Original Record Number 5

Size (µm)	% Volume Under	Size (µm)	% Volume Under	Size (µm)	% Volume Under	Size (µm)	% Volume Under	Size (µm)	% Volume Under	Size (µm)	% Volume Under
0.0100	0.00	0.0876	0.00	0.767	1.67	6.72	19.19	58.9	65.87	516	93.75
0.0114	0.00	0.0995	0.00	0.872	2.15	7.64	21.18	66.9	67.80	586	95.42
0.0129	0.00	0.113	0.00	0.991	2.66	8.68	23.32	76.0	69.67	666	96.94
0.0147	0.00	0.128	0.00	1.13	3.20	9.86	25.65	86.4	71.52	756	98.19
0.0167	0.00	0.146	0.00	1.28	3.78	11.2	28.16	98.1	73.39	859	99.12
0.0189	0.00	0.166	0.00	1.45	4.43	12.7	30.88	111	75.25	976	99.69
0.0215	0.00	0.188	0.00	1.65	5.15	14.5	33.80	127	77.07	1110	99.92
0.0244	0.00	0.214	0.00	1.88	5.94	16.4	36.92	144	78.83	1260	100.00
0.0278	0.00	0.243	0.00	2.13	6.83	18.7	40.19	163	80.48	1430	100.00
0.0315	0.00	0.276	0.00	2.42	7.79	21.2	43.55	186	82.01	1630	100.00
0.0358	0.00	0.314	0.00	2.75	8.85	24.1	46.93	211	83.42	1850	100.00
0.0407	0.00	0.357	0.00	3.12	9.99	27.4	50.25	240	84.75	2100	100.00
0.0463	0.00	0.405	0.08	3.55	11.23	31.1	53.42	272	86.06	2390	100.00
0.0526	0.00	0.460	0.24	4.03	12.58	35.3	56.39	310	87.41	2710	100.00
0.0597	0.00	0.523	0.49	4.58	14.04	40.1	59.12	352	88.84	3080	100.00
0.0679	0.00	0.594	0.82	5.21	15.63	45.6	61.58	400	90.39	3500	100.00
0.0771	0.00	0.675	1.22	5.92	17.34	51.8	63.82	454	92.04		

Measurement Details

File Path R:\Malvern 3000\Measurement Data\32784-26.mmes
Record Number 5
Operator Name efitzgerald
Average Result Records 1, 2, 3, 4

Measurement Details

Chemist Signature EF 2015-04-28
Reviewer Signature HY 2015-04-29

Annotation

Particle Technology Labs 555 Rogers Street Downers Grove, IL 60515

Record Number	Sample Name	Signature State	Signatory	Signature Date
5	Average of 'General Iron'	Unsigned		

Malvern

GI0000022

Malvern 3000 Liquid Analysis (v.1)

Particle Technology Labs

Created by: pdenight
Last edited: 3/30/2015 3:11:39 PM

Information

Client	STACK TEST GROUP, INC.	**Sample Name**	General Iron
Test Method		**Sample ID**	Particulate Filter T2 and Probe Rinse T2
Chemist	EF	**PTL ID**	207163-26, 207164-26
SOP File Name	HydroMV.cfg	**Measurement Date Time**	4/28/2015 1:11:24 PM
Carrier	Aqueous	**Instrument Type**	Mastersizer3000
Notes			

Measurement Details

Particle Name	Default Malvern (1)	**Dispersant Name**	Water
Particle Refractive Index	1.520	**Dispersant Refractive Index**	1.330
Particle Absorption Index	1.000	**Analysis Model**	General Purpose
Laser Power	78.48 %	**Analysis Sensitivity**	Normal
Accessory Name	Hydro MV	**Accessory Serial No.**	MAL1090246
Laser Obscuration	10.87 %	**Instrument Serial No.**	MAL1087829
Virtual Lens Range		**Software Version**	3.0.1402.140
Is Particle Fraunhofer?	No	**Are particles non-spherical?**	Yes

Analysis Results

Dv (10)	2.72 µm	**Span**	15.360
Dv (50)	41.4 µm	**D [4,3]**	219 µm
Dv (90)	638 µm	**Weighted Residual**	0.17 %

Frequency (compatible) and Undersize

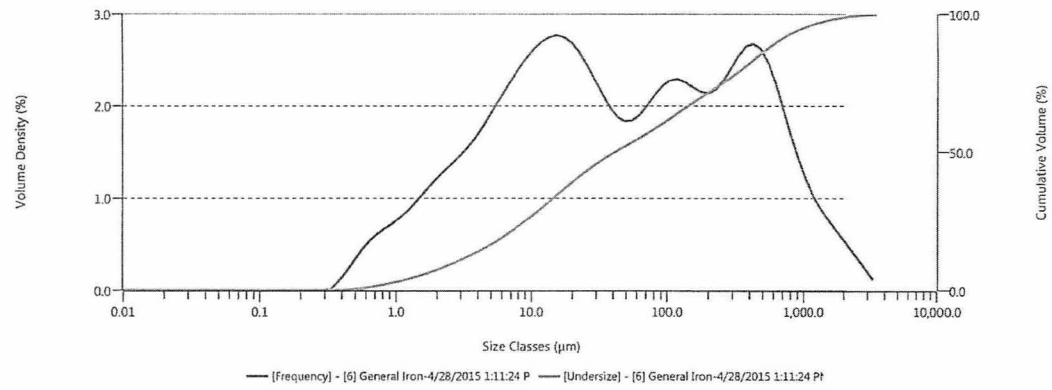

Measurement Details

File Path	R:\Malvern 3000\Measurement Data\32784-26.mmes		
Record Number	6	**Average Result Records**	
Operator Name	efitzgerald	**Original Record Number**	6

Measurement Details

Chemist Signature EF 2015-04-28 **Reviewer Signature** KK 2015-04-29

Malvern

GI0000023

Measurement Details

Client	STACK TEST GROUP, INC.	**Sample Name**	General Iron
Test Method		**Sample ID**	Particulate Filter T2 and Probe Rinse T2
Chemist	EF	**PTL ID**	207163-26, 207164-26
SOP File Name	HydroMV.cfg	**Measurement Date Time**	4/28/2015 1:11:24 PM
Carrier	Aqueous		
Notes			

Measurement Details

Particle Name	Default Malvern (1)	**Dispersant Name**	Water
Particle Refractive Index	1.520	**Dispersant Refractive Index**	1.330
Particle Absorption Index	1.000	**Analysis Model**	General Purpose
Laser Power	78.48 %	**Analysis Sensitivity**	Normal
Accessory Name	Hydro MV	**Accessory Serial No.**	MAL1090246
Instrument Type	Mastersizer3000	**Instrument Serial No.**	MAL1087829
Virtual Lens Range		**Software Version**	3.0.1402.140
Weighted Residual	0.17 %	**Are particles non-spherical?**	Yes
Is Particle Fraunhofer?	No	**Original Record Number**	6

Size (µm)	% Volume Under	Size (µm)	% Volume Under	Size (µm)	% Volume Under	Size (µm)	% Volume Under	Size (µm)	% Volume Under	Size (µm)	% Volume Under
0.0100	0.00	0.0876	0.00	0.767	1.80	6.72	20.48	58.9	54.24	516	86.68
0.0114	0.00	0.0995	0.00	0.872	2.35	7.64	22.40	66.9	55.83	586	88.75
0.0129	0.00	0.113	0.00	0.991	2.94	8.68	24.41	76.0	57.49	666	90.62
0.0147	0.00	0.128	0.00	1.13	3.58	9.86	26.52	86.4	59.26	756	92.25
0.0167	0.00	0.146	0.00	1.28	4.29	11.2	28.71	98.1	61.11	859	93.65
0.0189	0.00	0.166	0.00	1.45	5.07	12.7	30.96	111	63.01	976	94.84
0.0215	0.00	0.188	0.00	1.65	5.93	14.5	33.25	127	64.93	1110	95.84
0.0244	0.00	0.214	0.00	1.88	6.87	16.4	35.57	144	66.81	1260	96.69
0.0278	0.00	0.243	0.00	2.13	7.88	18.7	37.86	163	68.65	1430	97.42
0.0315	0.00	0.276	0.00	2.42	8.96	21.2	40.10	186	70.44	1630	98.06
0.0358	0.00	0.314	0.00	2.75	10.10	24.1	42.26	211	72.22	1850	98.61
0.0407	0.00	0.357	0.00	3.12	11.30	27.4	44.30	240	74.03	2100	99.07
0.0463	0.00	0.405	0.08	3.55	12.58	31.1	46.20	272	75.92	2390	99.44
0.0526	0.00	0.460	0.24	4.03	13.95	35.3	47.97	310	77.92	2710	99.72
0.0597	0.00	0.523	0.51	4.58	15.41	40.1	49.63	352	80.04	3080	99.91
0.0679	0.00	0.594	0.86	5.21	16.99	45.6	51.19	400	82.25	3500	100.00
0.0771	0.00	0.675	1.30	5.92	18.68	51.8	52.72	454	84.49		

Measurement Details

File Path	R:\Malvern 3000\Measurement Data\32784-26.mmes	
Record Number	6	**Average Result Records**
Operator Name	efitzgerald	

Measurement Details

Chemist Signature EF 2015-04-28 **Reviewer Signature** KE 2015-04-29

Annotation

Particle Technology Labs 555 Rogers Street Downers Grove, IL 60515

Record Number	Sample Name	Signature State	Signatory	Signature Date
6	General Iron	Unsigned		

Malvern

GI0000024

Malvern 3000 Liquid Analysis (v.1)

Particle Technology Labs

Created by: pdenight
Last edited: 3/30/2015 3:11:39 PM

Information

Client	STACK TEST GROUP, INC.	**Sample Name**	General Iron
Test Method		**Sample ID**	Particulate Filter T2 and Probe Rinse T2
Chemist	EF	**PTL ID**	207163-26, 207164-26
SOP File Name	HydroMV.cfg	**Measurement Date Time**	4/28/2015 1:12:27 PM
Carrier	Aqueous	**Instrument Type**	Mastersizer3000
Notes			

Measurement Details

Particle Name	Default Malvern (1)	**Dispersant Name**	Water
Particle Refractive Index	1.520	**Dispersant Refractive Index**	1.330
Particle Absorption Index	1.000	**Analysis Model**	General Purpose
Laser Power	78.48 %	**Analysis Sensitivity**	Normal
Accessory Name	Hydro MV	**Accessory Serial No.**	MAL1090246
Laser Obscuration	10.84 %	**Instrument Serial No.**	MAL1087829
Virtual Lens Range		**Software Version**	3.0.1402.140
Is Particle Fraunhofer?	No	**Are particles non-spherical?**	Yes

Analysis Results

Dv (10)	2.31 µm	**Span**	16.202
Dv (50)	29.9 µm	**D [4,3]**	161 µm
Dv (90)	487 µm	**Weighted Residual**	0.19 %

Frequency (compatible) and Undersize

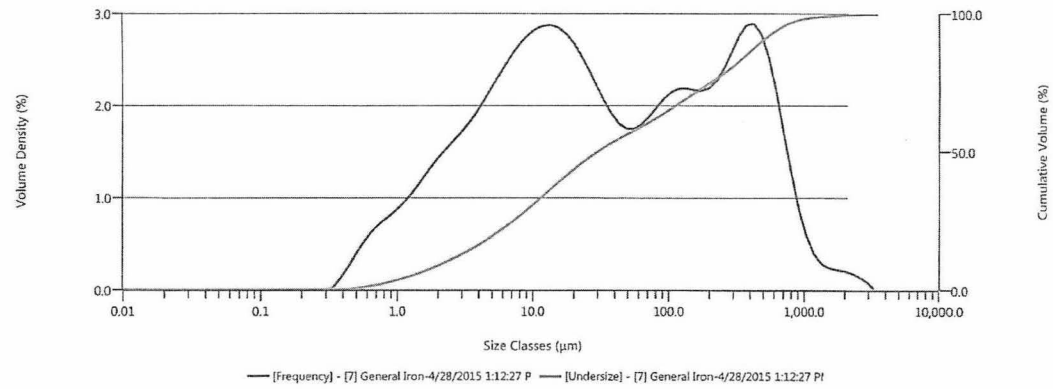

Measurement Details

File Path	R:\Malvern 3000\Measurement Data\32784-26.mmes		
Record Number	7	**Average Result Records**	
Operator Name	efitzgerald	**Original Record Number**	7

Measurement Details

Chemist Signature EF 2015-04-28 **Reviewer Signature** KE 2015-04-29

Malvern

GI0000025

Measurement Details

Client	STACK TEST GROUP, INC.	**Sample Name**	General Iron
Test Method		**Sample ID**	Particulate Filter T2 and Probe Rinse T2
Chemist	EF	**PTL ID**	207163-26, 207164-26
SOP File Name	HydroMV.cfg	**Measurement Date Time**	4/28/2015 1:12:27 PM
Carrier	Aqueous		
Notes			

Measurement Details

Particle Name	Default Malvern (1)	**Dispersant Name**	Water
Particle Refractive Index	1.520	**Dispersant Refractive Index**	1.330
Particle Absorption Index	1.000	**Analysis Model**	General Purpose
Laser Power	78.48 %	**Analysis Sensitivity**	Normal
Accessory Name	Hydro MV	**Accessory Serial No.**	MAL1090246
Instrument Type	Mastersizer3000	**Instrument Serial No.**	MAL1087829
Virtual Lens Range		**Software Version**	3.0.1402.140
Weighted Residual	0.19 %	**Are particles non-spherical?**	Yes
Is Particle Fraunhofer?	No	**Original Record Number**	7

Size (µm)	% Volume Under	Size (µm)	% Volume Under	Size (µm)	% Volume Under	Size (µm)	% Volume Under	Size (µm)	% Volume Under	Size (µm)	% Volume Under
0.0100	0.00	0.0876	0.00	0.767	2.09	6.72	23.80	58.9	58.26	516	91.03
0.0114	0.00	0.0995	0.00	0.872	2.72	7.64	25.95	66.9	59.75	586	93.14
0.0129	0.00	0.113	0.00	0.991	3.41	8.68	28.19	76.0	61.31	666	94.92
0.0147	0.00	0.128	0.00	1.13	4.17	9.86	30.50	86.4	62.95	756	96.32
0.0167	0.00	0.146	0.00	1.28	4.99	11.2	32.86	98.1	64.68	859	97.36
0.0189	0.00	0.166	0.00	1.45	5.91	12.7	35.25	111	66.47	976	98.08
0.0215	0.00	0.188	0.00	1.65	6.92	14.5	37.65	127	68.29	1110	98.55
0.0244	0.00	0.214	0.00	1.88	8.02	16.4	40.03	144	70.11	1260	98.87
0.0278	0.00	0.243	0.00	2.13	9.21	18.7	42.35	163	71.92	1430	99.10
0.0315	0.00	0.276	0.00	2.42	10.47	21.2	44.59	186	73.72	1630	99.30
0.0358	0.00	0.314	0.00	2.75	11.81	24.1	46.71	211	75.54	1850	99.48
0.0407	0.00	0.357	0.00	3.12	13.23	27.4	48.70	240	77.42	2100	99.65
0.0463	0.00	0.405	0.09	3.55	14.72	31.1	50.55	272	79.42	2390	99.80
0.0526	0.00	0.460	0.28	4.03	16.31	35.3	52.26	310	81.58	2710	99.92
0.0597	0.00	0.523	0.59	4.58	18.01	40.1	53.85	352	83.88	3080	100.00
0.0679	0.00	0.594	1.00	5.21	19.82	45.6	55.35	400	86.29	3500	100.00
0.0771	0.00	0.675	1.51	5.92	21.76	51.8	56.80	454	88.71		

Measurement Details

File Path	R:\Malvern 3000\Measurement Data\32784-26.mmes	
Record Number	7	**Average Result Records**
Operator Name	efitzgerald	

Measurement Details

Chemist Signature EF 2015-04-28 **Reviewer Signature** KG 2015-04-29

Annotation

Particle Technology Labs 555 Rogers Street Downers Grove, IL 60515

Record Number	Sample Name	Signature State	Signatory	Signature Date
7	General Iron	Unsigned		

Malvern

Malvern 3000 Liquid Analysis (v.1)

Particle Technology Labs

Created by: pdenight
Last edited: 3/30/2015 3:11:39 PM

Information

Client	STACK TEST GROUP, INC.	**Sample Name**	General Iron
Test Method		**Sample ID**	Particulate Filter T2 and Probe Rinse T2
Chemist	EF	**PTL ID**	207163-26, 207164-26
SOP File Name	HydroMV.cfg	**Measurement Date Time**	4/28/2015 1:13:29 PM
Carrier	Aqueous	**Instrument Type**	Mastersizer3000
Notes			

Measurement Details

Particle Name	Default Malvern (1)	**Dispersant Name**	Water
Particle Refractive Index	1.520	**Dispersant Refractive Index**	1.330
Particle Absorption Index	1.000	**Analysis Model**	General Purpose
Laser Power	78.48 %	**Analysis Sensitivity**	Normal
Accessory Name	Hydro MV	**Accessory Serial No.**	MAL1090246
Laser Obscuration	10.73 %	**Instrument Serial No.**	MAL1087829
Virtual Lens Range		**Software Version**	3.0.1402.140
Is Particle Fraunhofer?	No	**Are particles non-spherical?**	Yes

Analysis Results

Dv (10)	2.07 µm	**Span**	18.692
Dv (50)	23.7 µm	**D [4,3]**	131 µm
Dv (90)	445 µm	**Weighted Residual**	0.20 %

Frequency (compatible) and Undersize

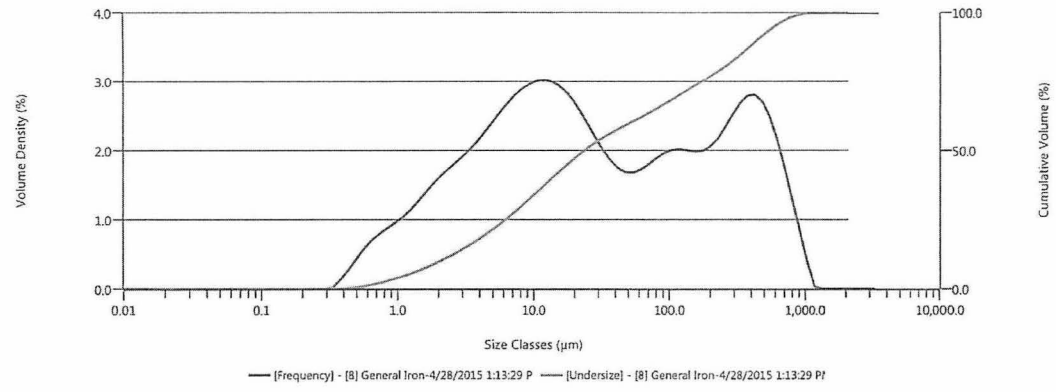

Measurement Details

File Path	R:\Malvern 3000\Measurement Data\32784-26.mmes		
Record Number	8	**Average Result Records**	
Operator Name	efitzgerald	**Original Record Number**	8

Measurement Details

Chemist Signature EF 2015-04-28 **Reviewer Signature** MS 2015.04.29

Malvern

GI0000027

Measurement Details

Client	STACK TEST GROUP, INC.	**Sample Name**	General Iron
Test Method		**Sample ID**	Particulate Filter T2 and Probe Rinse T2
Chemist	EF	**PTL ID**	207163-26, 207164-26
SOP File Name	HydroMV.cfg	**Measurement Date Time**	4/28/2015 1:13:29 PM
Carrier	Aqueous		
Notes			

Measurement Details

Particle Name	Default Malvern (1)	**Dispersant Name**	Water
Particle Refractive Index	1.520	**Dispersant Refractive Index**	1.330
Particle Absorption Index	1.000	**Analysis Model**	General Purpose
Laser Power	78.48 %	**Analysis Sensitivity**	Normal
Accessory Name	Hydro MV	**Accessory Serial No.**	MAL1090246
Instrument Type	Mastersizer3000	**Instrument Serial No.**	MAL1087829
Virtual Lens Range		**Software Version**	3.0.1402.140
Weighted Residual	0.20 %	**Are particles non-spherical?**	Yes
Is Particle Fraunhofer?	No	**Original Record Number**	8

Size (µm)	% Volume Under	Size (µm)	% Volume Under	Size (µm)	% Volume Under	Size (µm)	% Volume Under	Size (µm)	% Volume Under	Size (µm)	% Volume Under
0.0100	0.00	0.0876	0.00	0.767	2.34	6.72	26.38	58.9	61.45	516	92.65
0.0114	0.00	0.0995	0.00	0.872	3.05	7.64	28.70	66.9	62.89	586	94.73
0.0129	0.00	0.113	0.00	0.991	3.82	8.68	31.11	76.0	64.39	666	96.52
0.0147	0.00	0.128	0.00	1.13	4.66	9.86	33.58	86.4	65.97	756	97.96
0.0167	0.00	0.146	0.00	1.28	5.58	11.2	36.08	98.1	67.61	859	99.02
0.0189	0.00	0.166	0.00	1.45	6.60	12.7	38.60	111	69.28	976	99.70
0.0215	0.00	0.188	0.00	1.65	7.72	14.5	41.10	127	70.96	1110	100.00
0.0244	0.00	0.214	0.00	1.88	8.95	16.4	43.55	144	72.63	1260	100.00
0.0278	0.00	0.243	0.00	2.13	10.28	18.7	45.92	163	74.28	1430	100.00
0.0315	0.00	0.276	0.00	2.42	11.70	21.2	48.18	186	75.94	1630	100.00
0.0358	0.00	0.314	0.00	2.75	13.19	24.1	50.29	211	77.64	1850	100.00
0.0407	0.00	0.357	0.00	3.12	14.77	27.4	52.25	240	79.44	2100	100.00
0.0463	0.00	0.405	0.11	3.55	16.43	31.1	54.05	272	81.38	2390	100.00
0.0526	0.00	0.460	0.32	4.03	18.18	35.3	55.69	310	83.47	2710	100.00
0.0597	0.00	0.523	0.66	4.58	20.05	40.1	57.22	352	85.71	3080	100.00
0.0679	0.00	0.594	1.13	5.21	22.04	45.6	58.65	400	88.04	3500	100.00
0.0771	0.00	0.675	1.69	5.92	24.15	51.8	60.05	454	90.39		

Measurement Details

File Path	R:\Malvern 3000\Measurement Data\32784-26.mmes	
Record Number	8	**Average Result Records**
Operator Name	efitzgerald	

Measurement Details

Chemist Signature	EF 2015-04-28	**Reviewer Signature**	KA 2015-04-29

Annotation

Particle Technology Labs 555 Rogers Street Downers Grove, IL 60515

Record Number	Sample Name	Signature State	Signatory	Signature Date
8	General Iron	Unsigned		

Malvern

GI0000028

Malvern 3000 Liquid Analysis (v.1)

Particle Technology Labs

Created by: pdenight
Last edited: 3/30/2015 3:11:39 PM

Information

Client	STACK TEST GROUP, INC.	**Sample Name**	General Iron
Test Method		**Sample ID**	Particulate Filter T2 and Probe Rinse T2
Chemist	EF	**PTL ID**	207163-26, 207164-26
SOP File Name	HydroMV.cfg	**Measurement Date Time**	4/28/2015 1:14:31 PM
Carrier	Aqueous	**Instrument Type**	Mastersizer3000
Notes			

Measurement Details

Particle Name	Default Malvern (1)	**Dispersant Name**	Water
Particle Refractive Index	1.520	**Dispersant Refractive Index**	1.330
Particle Absorption Index	1.000	**Analysis Model**	General Purpose
Laser Power	78.48 %	**Analysis Sensitivity**	Normal
Accessory Name	Hydro MV	**Accessory Serial No.**	MAL1090246
Laser Obscuration	10.66 %	**Instrument Serial No.**	MAL1087829
Virtual Lens Range		**Software Version**	3.0.1402.140
Is Particle Fraunhofer?	No	**Are particles non-spherical?**	Yes

Analysis Results

Dv (10)	2.00 µm	**Span**	19.973
Dv (50)	23.0 µm	**D [4,3]**	136 µm
Dv (90)	461 µm	**Weighted Residual**	0.22 %

Frequency (compatible) and Undersize

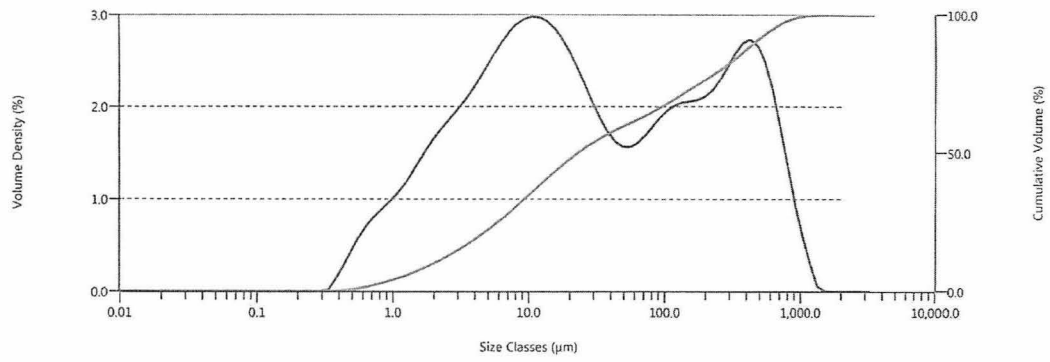

Measurement Details

File Path	R:\Malvern 3000\Measurement Data\32784-26.mmes		
Record Number	9	**Average Result Records**	
Operator Name	efitzgerald	**Original Record Number**	9

Measurement Details

Chemist Signature	EF 2015-04-28	**Reviewer Signature**	KS 2015-04-29

Malvern

GI0000029

Measurement Details

Client	STACK TEST GROUP, INC.	**Sample Name**	General Iron
Test Method		**Sample ID**	Particulate Filter T2 and Probe Rinse T2
Chemist	EF	**PTL ID**	207163-26, 207164-26
SOP File Name	HydroMV.cfg	**Measurement Date Time**	4/28/2015 1:14:31 PM
Carrier	Aqueous		
Notes			

Measurement Details

Particle Name	Default Malvern (1)	**Dispersant Name**	Water
Particle Refractive Index	1.520	**Dispersant Refractive Index**	1.330
Particle Absorption Index	1.000	**Analysis Model**	General Purpose
Laser Power	78.48 %	**Analysis Sensitivity**	Normal
Accessory Name	Hydro MV	**Accessory Serial No.**	MAL1090246
Instrument Type	Mastersizer3000	**Instrument Serial No.**	MAL1087829
Virtual Lens Range		**Software Version**	3.0.1402.140
Weighted Residual	0.22 %	**Are particles non-spherical?**	Yes
Is Particle Fraunhofer?	No	**Original Record Number**	9

Size (µm)	% Volume Under	Size (µm)	% Volume Under	Size (µm)	% Volume Under	Size (µm)	% Volume Under	Size (µm)	% Volume Under	Size (µm)	% Volume Under
0.0100	0.00	0.0876	0.00	0.767	2.43	6.72	27.21	58.9	61.28	516	91.95
0.0114	0.00	0.0995	0.00	0.872	3.16	7.64	29.55	66.9	62.61	586	94.02
0.0129	0.00	0.113	0.00	0.991	3.96	8.68	31.97	76.0	64.01	666	95.84
0.0147	0.00	0.128	0.00	1.13	4.83	9.86	34.44	86.4	65.49	756	97.32
0.0167	0.00	0.146	0.00	1.28	5.78	11.2	36.92	98.1	67.06	859	98.45
0.0189	0.00	0.166	0.00	1.45	6.84	12.7	39.41	111	68.69	976	99.23
0.0215	0.00	0.188	0.00	1.65	8.01	14.5	41.86	127	70.38	1110	99.71
0.0244	0.00	0.214	0.00	1.88	9.29	16.4	44.24	144	72.08	1260	99.97
0.0278	0.00	0.243	0.00	2.13	10.67	18.7	46.54	163	73.80	1430	100.00
0.0315	0.00	0.276	0.00	2.42	12.14	21.2	48.71	186	75.52	1630	100.00
0.0358	0.00	0.314	0.00	2.75	13.69	24.1	50.74	211	77.28	1850	100.00
0.0407	0.00	0.357	0.00	3.12	15.32	27.4	52.61	240	79.09	2100	100.00
0.0463	0.00	0.405	0.11	3.55	17.03	31.1	54.32	272	81.00	2390	100.00
0.0526	0.00	0.460	0.34	4.03	18.84	35.3	55.88	310	83.03	2710	100.00
0.0597	0.00	0.523	0.69	4.58	20.76	40.1	57.32	352	85.18	3080	100.00
0.0679	0.00	0.594	1.17	5.21	22.80	45.6	58.68	400	87.43	3500	100.00
0.0771	0.00	0.675	1.76	5.92	24.95	51.8	59.98	454	89.72		

Measurement Details

File Path	R:\Malvern 3000\Measurement Data\32784-26.mmes	
Record Number	9	**Average Result Records**
Operator Name	efitzgerald	

Measurement Details

Chemist Signature EF 2015-04-28 **Reviewer Signature** AZ 2015-04-29

Annotation

Particle Technology Labs 555 Rogers Street Downers Grove, IL 60515

Record Number	Sample Name	Signature State	Signatory	Signature Date
9	General Iron	Unsigned		

Malvern

GI0000030

Malvern 3000 Liquid Analysis (v.1)

Particle Technology Labs

Created by: pdenight
Last edited: 3/30/2015 3:11:39 PM

Information

Client	STACK TEST GROUP, INC.	**Sample Name**	Average of 'General Iron'
Test Method		**Sample ID**	Particulate Filter T2 and Probe Rinse T2
Chemist	EF	**PTL ID**	207163-26, 207164-26
SOP File Name	HydroMV.cfg	**Measurement Date Time**	4/28/2015 1:11:24 PM
Carrier	Aqueous	**Instrument Type**	Mastersizer3000
Notes			

Measurement Details

Particle Name	Default Malvern (1)	**Dispersant Name**	Water
Particle Refractive Index	1.520	**Dispersant Refractive Index**	1.330
Particle Absorption Index	1.000	**Analysis Model**	General Purpose
Laser Power	78.48 %	**Analysis Sensitivity**	Normal
Accessory Name	Hydro MV	**Accessory Serial No.**	MAL1090246
Laser Obscuration	10.77 %	**Instrument Serial No.**	MAL1087829
Virtual Lens Range		**Software Version**	3.0.1402.140
Is Particle Fraunhofer?	No	**Are particles non-spherical?**	Yes

Analysis Results

Dv (10)	2.24 µm	**Span**	17.482
Dv (50)	28.4 µm	**D [4,3]**	162 µm
Dv (90)	499 µm	**Weighted Residual**	0.19 %

Frequency (compatible) and Undersize

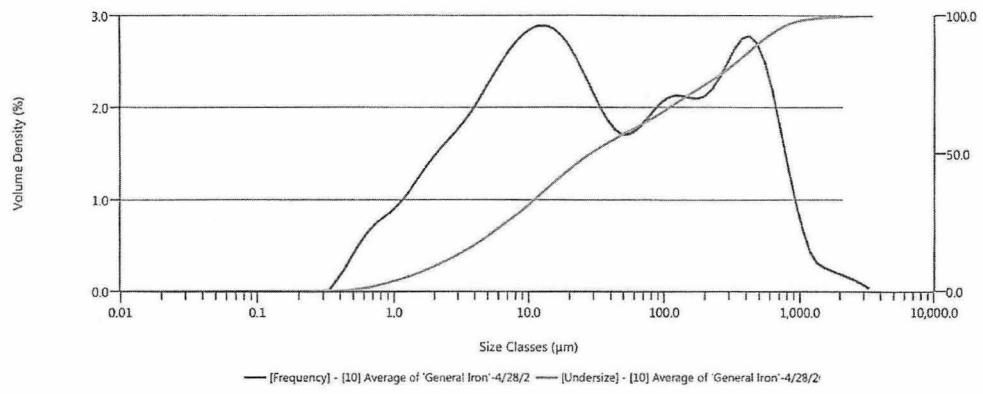

Measurement Details

File Path	R:\Malvern 3000\Measurement Data\32784-26.mmes		
Record Number	10	**Average Result Records**	6, 7, 8, 9
Operator Name	efitzgerald	**Original Record Number**	10

Measurement Details

Chemist Signature EF 2015-04-28 **Reviewer Signature** KL 2015-04-29

Malvern

GI0000031

Measurement Details

Client	STACK TEST GROUP, INC.	**Sample Name**	Average of 'General Iron'
Test Method		**Sample ID**	Particulate Filter T2 and Probe Rinse T2
Chemist	EF	**PTL ID**	207163-26, 207164-26
SOP File Name	HydroMV.cfg	**Measurement Date Time**	4/28/2015 1:11:24 PM
Carrier	Aqueous		
Notes			

Measurement Details

Particle Name	Default Malvern (1)	**Dispersant Name**	Water
Particle Refractive Index	1.520	**Dispersant Refractive Index**	1.330
Particle Absorption Index	1.000	**Analysis Model**	General Purpose
Laser Power	78.48 %	**Analysis Sensitivity**	Normal
Accessory Name	Hydro MV	**Accessory Serial No.**	MAL1090246
Instrument Type	Mastersizer3000	**Instrument Serial No.**	MAL1087829
Virtual Lens Range		**Software Version**	3.0.1402.140
Weighted Residual	0.19 %	**Are particles non-spherical?**	Yes
Is Particle Fraunhofer?	No	**Original Record Number**	10

Size (µm)	% Volume Under	Size (µm)	% Volume Under	Size (µm)	% Volume Under	Size (µm)	% Volume Under	Size (µm)	% Volume Under	Size (µm)	% Volume Under
0.0100	0.00	0.0876	0.00	0.767	2.16	6.72	24.47	58.9	58.81	516	90.58
0.0114	0.00	0.0995	0.00	0.872	2.82	7.64	26.65	66.9	60.27	586	92.66
0.0129	0.00	0.113	0.00	0.991	3.53	8.68	28.92	76.0	61.80	666	94.47
0.0147	0.00	0.128	0.00	1.13	4.31	9.86	31.26	86.4	63.42	756	95.97
0.0167	0.00	0.146	0.00	1.28	5.16	11.2	33.64	98.1	65.12	859	97.12
0.0189	0.00	0.166	0.00	1.45	6.10	12.7	36.05	111	66.87	976	97.96
0.0215	0.00	0.188	0.00	1.65	7.14	14.5	38.47	127	68.64	1110	98.52
0.0244	0.00	0.214	0.00	1.88	8.28	16.4	40.85	144	70.41	1260	98.88
0.0278	0.00	0.243	0.00	2.13	9.51	18.7	43.17	163	72.16	1430	99.13
0.0315	0.00	0.276	0.00	2.42	10.82	21.2	45.39	186	73.91	1630	99.34
0.0358	0.00	0.314	0.00	2.75	12.20	24.1	47.50	211	75.67	1850	99.52
0.0407	0.00	0.357	0.00	3.12	13.65	27.4	49.46	240	77.49	2100	99.68
0.0463	0.00	0.405	0.10	3.55	15.19	31.1	51.28	272	79.43	2390	99.81
0.0526	0.00	0.460	0.30	4.03	16.82	35.3	52.95	310	81.50	2710	99.91
0.0597	0.00	0.523	0.61	4.58	18.56	40.1	54.50	352	83.70	3080	99.98
0.0679	0.00	0.594	1.04	5.21	20.41	45.6	55.97	400	86.00	3500	100.00
0.0771	0.00	0.675	1.56	5.92	22.38	51.8	57.39	454	88.33		

Measurement Details

File Path	R:\Malvern 3000\Measurement Data\32784-26.mmes		
Record Number	10	**Average Result Records**	6, 7, 8, 9
Operator Name	efitzgerald		

Measurement Details

Chemist Signature EF 2015-04-28 **Reviewer Signature** [illegible] 2015-04-29

Annotation

Particle Technology Labs 555 Rogers Street Downers Grove, IL 60515

Record Number	Sample Name	Signature State	Signatory	Signature Date
10	Average of 'General Iron'	Unsigned		

Malvern

GI0000032

Malvern 3000 Liquid Analysis (v.1)

Particle Technology Labs

Created by: pdenight
Last edited: 3/30/2015 3:11:39 PM

Information

Client	STACK TEST GROUP, INC.	**Sample Name**	General Iron
Test Method		**Sample ID**	Particulate Filter T3 and Probe Rinse T3
Chemist	EF	**PTL ID**	207165-26, 207166-26
SOP File Name	HydroMV.cfg	**Measurement Date Time**	4/28/2015 1:38:59 PM
Carrier	Aqueous	**Instrument Type**	Mastersizer3000
Notes			

Measurement Details

Particle Name	Default Malvern (1)	**Dispersant Name**	Water
Particle Refractive Index	1.520	**Dispersant Refractive Index**	1.330
Particle Absorption Index	1.000	**Analysis Model**	General Purpose
Laser Power	78.47 %	**Analysis Sensitivity**	Normal
Accessory Name	Hydro MV	**Accessory Serial No.**	MAL1090246
Laser Obscuration	10.88 %	**Instrument Serial No.**	MAL1087829
Virtual Lens Range		**Software Version**	3.0.1402.140
Is Particle Fraunhofer?	No	**Are particles non-spherical?**	Yes

Analysis Results

Dv (10)	2.42 µm	**Span**	14.581
Dv (50)	26.9 µm	**D [4,3]**	119 µm
Dv (90)	394 µm	**Weighted Residual**	0.26 %

Frequency (compatible) and Undersize

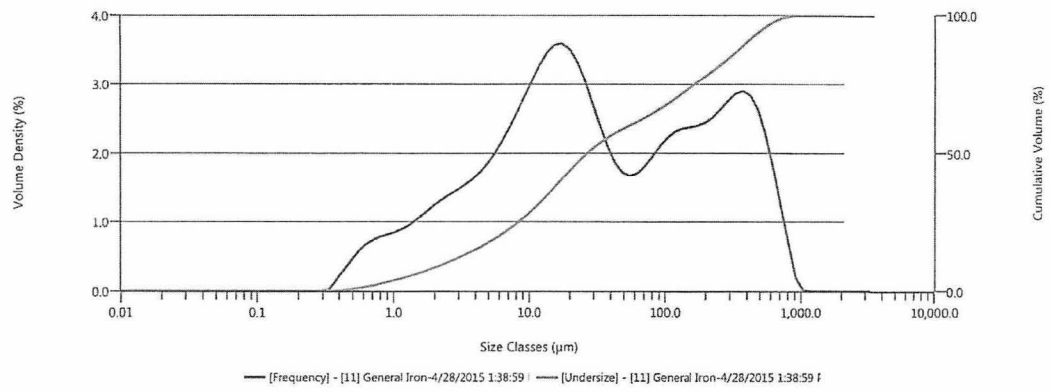

Measurement Details

File Path	R:\Malvern 3000\Measurement Data\32784-26.mmes		
Record Number	11	**Average Result Records**	
Operator Name	efitzgerald	**Original Record Number**	11

Measurement Details

Chemist Signature EF 2015-04-28 **Reviewer Signature** [illegible] 2015-04-29

Malvern

GI0000033

Measurement Details

Client	STACK TEST GROUP, INC.	**Sample Name**	General Iron
Test Method		**Sample ID**	Particulate Filter T3 and Probe Rinse T3
Chemist	EF	**PTL ID**	207165-26, 207166-26
SOP File Name	HydroMV.cfg	**Measurement Date Time**	4/28/2015 1:38:59 PM
Carrier	Aqueous		
Notes			

Measurement Details

Particle Name	Default Malvern (1)	**Dispersant Name**	Water
Particle Refractive Index	1.520	**Dispersant Refractive Index**	1.330
Particle Absorption Index	1.000	**Analysis Model**	General Purpose
Laser Power	78.47 %	**Analysis Sensitivity**	Normal
Accessory Name	Hydro MV	**Accessory Serial No.**	MAL1090246
Instrument Type	Mastersizer3000	**Instrument Serial No.**	MAL1087829
Virtual Lens Range		**Software Version**	3.0.1402.140
Weighted Residual	0.26 %	**Are particles non-spherical?**	Yes
Is Particle Fraunhofer?	No	**Original Record Number**	11

Size (µm)	% Volume Under	Size (µm)	% Volume Under	Size (µm)	% Volume Under	Size (µm)	% Volume Under	Size (µm)	% Volume Under	Size (µm)	% Volume Under
0.0100	0.00	0.0876	0.00	0.767	2.40	6.72	21.42	58.9	60.77	516	94.83
0.0114	0.00	0.0995	0.00	0.872	3.06	7.64	23.40	66.9	62.19	586	96.73
0.0129	0.00	0.113	0.00	0.991	3.73	8.68	25.56	76.0	63.70	666	98.23
0.0147	0.00	0.128	0.00	1.13	4.44	9.86	27.92	86.4	65.33	756	99.27
0.0167	0.00	0.146	0.00	1.28	5.19	11.2	30.48	98.1	67.09	859	99.86
0.0189	0.00	0.166	0.00	1.45	6.00	12.7	33.23	111	68.95	976	100.00
0.0215	0.00	0.188	0.00	1.65	6.89	14.5	36.12	127	70.87	1110	100.00
0.0244	0.00	0.214	0.00	1.88	7.85	16.4	39.11	144	72.84	1260	100.00
0.0278	0.00	0.243	0.00	2.13	8.88	18.7	42.11	163	74.82	1430	100.00
0.0315	0.00	0.276	0.00	2.42	9.98	21.2	45.04	186	76.82	1630	100.00
0.0358	0.00	0.314	0.00	2.75	11.15	24.1	47.82	211	78.85	1850	100.00
0.0407	0.00	0.357	0.00	3.12	12.37	27.4	50.37	240	80.94	2100	100.00
0.0463	0.00	0.405	0.13	3.55	13.64	31.1	52.65	272	83.14	2390	100.00
0.0526	0.00	0.460	0.37	4.03	14.99	35.3	54.66	310	85.44	2710	100.00
0.0597	0.00	0.523	0.74	4.58	16.42	40.1	56.41	352	87.83	3080	100.00
0.0679	0.00	0.594	1.22	5.21	17.95	45.6	57.96	400	90.26	3500	100.00
0.0771	0.00	0.675	1.78	5.92	19.61	51.8	59.38	454	92.63		

Measurement Details

File Path	R:\Malvern 3000\Measurement Data\32784-26.mmes	
Record Number	11	**Average Result Records**
Operator Name	efitzgerald	

Measurement Details

Chemist Signature EF 2015-04-28 **Reviewer Signature** HZ 2015-04-29

Annotation

Particle Technology Labs 555 Rogers Street Downers Grove, IL 60515

Record Number	Sample Name	Signature State	Signatory	Signature Date
11	General Iron	Unsigned		

Malvern

GI0000034

Malvern 3000 Liquid Analysis (v.1)

Particle Technology Labs

Created by: pdenight
Last edited: 3/30/2015 3:11:39 PM

Information

Client	STACK TEST GROUP, INC.	**Sample Name**	General Iron
Test Method		**Sample ID**	Particulate Filter T3 and Probe Rinse T3
Chemist	EF	**PTL ID**	207165-26, 207166-26
SOP File Name	HydroMV.cfg	**Measurement Date Time**	4/28/2015 1:40:01 PM
Carrier	Aqueous	**Instrument Type**	Mastersizer3000
Notes			

Measurement Details

Particle Name	Default Malvern (1)	**Dispersant Name**	Water
Particle Refractive Index	1.520	**Dispersant Refractive Index**	1.330
Particle Absorption Index	1.000	**Analysis Model**	General Purpose
Laser Power	78.47 %	**Analysis Sensitivity**	Normal
Accessory Name	Hydro MV	**Accessory Serial No.**	MAL1090246
Laser Obscuration	10.89 %	**Instrument Serial No.**	MAL1087829
Virtual Lens Range		**Software Version**	3.0.1402.140
Is Particle Fraunhofer?	No	**Are particles non-spherical?**	Yes

Analysis Results

Dv (10)	2.05 µm	**Span**	16.646
Dv (50)	21.3 µm	**D [4,3]**	105 µm
Dv (90)	356 µm	**Weighted Residual**	0.30 %

Frequency (compatible) and Undersize

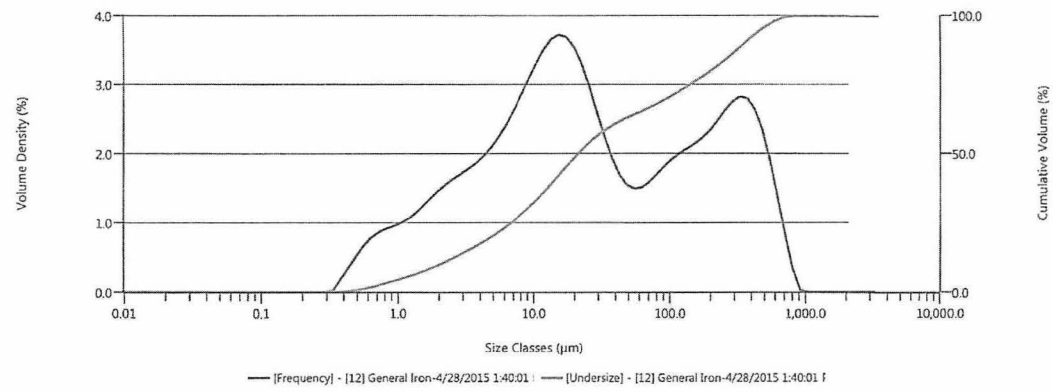

Measurement Details

File Path	R:\Malvern 3000\Measurement Data\32784-26.mmes		
Record Number	12	**Average Result Records**	
Operator Name	efitzgerald	**Original Record Number**	12

Measurement Details

Chemist Signature EF 2015-04-28 **Reviewer Signature** KG 2015-04-29

Malvern

GI0000035

Measurement Details

Client	STACK TEST GROUP, INC.	**Sample Name**	General Iron
Test Method		**Sample ID**	Particulate Filter T3 and Probe Rinse T3
Chemist	EF	**PTL ID**	207165-26, 207166-26
SOP File Name	HydroMV.cfg	**Measurement Date Time**	4/28/2015 1:40:01 PM
Carrier	Aqueous		
Notes			

Measurement Details

Particle Name	Default Malvern (1)	**Dispersant Name**	Water
Particle Refractive Index	1.520	**Dispersant Refractive Index**	1.330
Particle Absorption Index	1.000	**Analysis Model**	General Purpose
Laser Power	78.47 %	**Analysis Sensitivity**	Normal
Accessory Name	Hydro MV	**Accessory Serial No.**	MAL1090246
Instrument Type	Mastersizer3000	**Instrument Serial No.**	MAL1087829
Virtual Lens Range		**Software Version**	3.0.1402.140
Weighted Residual	0.30 %	**Are particles non-spherical?**	Yes
Is Particle Fraunhofer?	No	**Original Record Number**	12

Size (µm)	% Volume Under	Size (µm)	% Volume Under	Size (µm)	% Volume Under	Size (µm)	% Volume Under	Size (µm)	% Volume Under	Size (µm)	% Volume Under
0.0100	0.00	0.0876	0.00	0.767	2.79	6.72	24.83	58.9	64.73	516	96.27
0.0114	0.00	0.0995	0.00	0.872	3.55	7.64	27.03	66.9	65.99	586	97.87
0.0129	0.00	0.113	0.00	0.991	4.33	8.68	29.41	76.0	67.31	666	99.03
0.0147	0.00	0.128	0.00	1.13	5.16	9.86	31.99	86.4	68.73	756	99.74
0.0167	0.00	0.146	0.00	1.28	6.04	11.2	34.77	98.1	70.25	859	100.00
0.0189	0.00	0.166	0.00	1.45	6.99	12.7	37.70	111	71.86	976	100.00
0.0215	0.00	0.188	0.00	1.65	8.04	14.5	40.76	127	73.53	1110	100.00
0.0244	0.00	0.214	0.00	1.88	9.17	16.4	43.88	144	75.26	1260	100.00
0.0278	0.00	0.243	0.00	2.13	10.39	18.7	46.96	163	77.05	1430	100.00
0.0315	0.00	0.276	0.00	2.42	11.69	21.2	49.92	186	78.90	1630	100.00
0.0358	0.00	0.314	0.00	2.75	13.06	24.1	52.67	211	80.85	1850	100.00
0.0407	0.00	0.357	0.00	3.12	14.49	27.4	55.15	240	82.91	2100	100.00
0.0463	0.00	0.405	0.15	3.55	15.98	31.1	57.32	272	85.10	2390	100.00
0.0526	0.00	0.460	0.44	4.03	17.53	35.3	59.20	310	87.39	2710	100.00
0.0597	0.00	0.523	0.86	4.58	19.17	40.1	60.81	352	89.75	3080	100.00
0.0679	0.00	0.594	1.42	5.21	20.92	45.6	62.21	400	92.10	3500	100.00
0.0771	0.00	0.675	2.07	5.92	22.80	51.8	63.50	454	94.31		

Measurement Details

File Path	R:\Malvern 3000\Measurement Data\32784-26.mmes	
Record Number	12	**Average Result Records**
Operator Name	efitzgerald	

Measurement Details

Chemist Signature EF 2015-04-28 **Reviewer Signature** [illegible] 2015-04-27

Annotation

Particle Technology Labs 555 Rogers Street Downers Grove, IL 60515

Record Number	Sample Name	Signature State	Signatory	Signature Date
12	General Iron	Unsigned		

Malvern

GI000036

Malvern 3000 Liquid Analysis (v.1)

Particle Technology Labs

Created by: pdenight
Last edited: 3/30/2015 3:11:39 PM

Information

Client	STACK TEST GROUP, INC.	**Sample Name**	General Iron
Test Method		**Sample ID**	Particulate Filter T3 and Probe Rinse T3
Chemist	EF	**PTL ID**	207165-26, 207166-26
SOP File Name	HydroMV.cfg	**Measurement Date Time**	4/28/2015 1:41:04 PM
Carrier	Aqueous	**Instrument Type**	Mastersizer3000
Notes			

Measurement Details

Particle Name	Default Malvern (1)	**Dispersant Name**	Water
Particle Refractive Index	1.520	**Dispersant Refractive Index**	1.330
Particle Absorption Index	1.000	**Analysis Model**	General Purpose
Laser Power	78.47 %	**Analysis Sensitivity**	Normal
Accessory Name	Hydro MV	**Accessory Serial No.**	MAL1090246
Laser Obscuration	10.87 %	**Instrument Serial No.**	MAL1087829
Virtual Lens Range		**Software Version**	3.0.1402.140
Is Particle Fraunhofer?	No	**Are particles non-spherical?**	Yes

Analysis Results

Dv (10)	1.93 µm	**Span**	19.526
Dv (50)	20.0 µm	**D [4,3]**	112 µm
Dv (90)	393 µm	**Weighted Residual**	0.29 %

Frequency (compatible) and Undersize

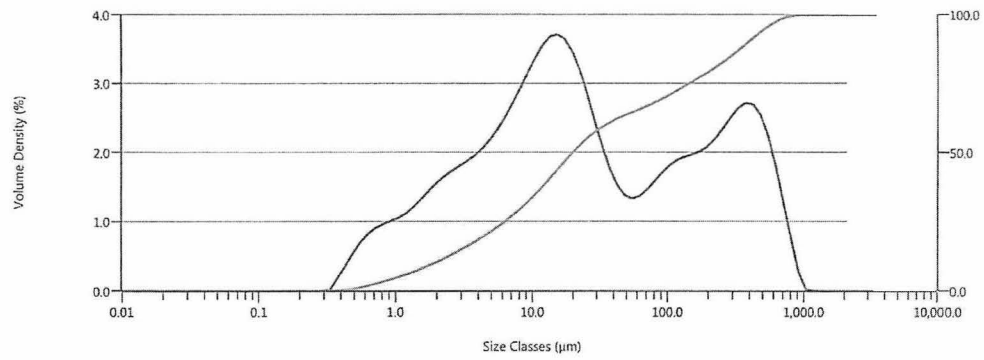

Measurement Details

File Path	R:\Malvern 3000\Measurement Data\32784-26.mmes		
Record Number	13	**Average Result Records**	
Operator Name	efitzgerald	**Original Record Number**	13

Measurement Details

Chemist Signature EF 2015-04-28 **Reviewer Signature** HE 2015-04-29

Malvern

GI0000037

Measurement Details

Client	STACK TEST GROUP, INC.	**Sample Name**	General Iron
Test Method		**Sample ID**	Particulate Filter T3 and Probe Rinse T3
Chemist	EF	**PTL ID**	207165-26, 207166-26
SOP File Name	HydroMV.cfg	**Measurement Date Time**	4/28/2015 1:41:04 PM
Carrier	Aqueous		
Notes			

Measurement Details

Particle Name	Default Malvern (1)	**Dispersant Name**	Water
Particle Refractive Index	1.520	**Dispersant Refractive Index**	1.330
Particle Absorption Index	1.000	**Analysis Model**	General Purpose
Laser Power	78.47 %	**Analysis Sensitivity**	Normal
Accessory Name	Hydro MV	**Accessory Serial No.**	MAL1090246
Instrument Type	Mastersizer3000	**Instrument Serial No.**	MAL1087829
Virtual Lens Range		**Software Version**	3.0.1402.140
Weighted Residual	0.29 %	**Are particles non-spherical?**	Yes
Is Particle Fraunhofer?	No	**Original Record Number**	13

Size (µm)	% Volume Under	Size (µm)	% Volume Under	Size (µm)	% Volume Under	Size (µm)	% Volume Under	Size (µm)	% Volume Under	Size (µm)	% Volume Under
0.0100	0.00	0.0876	0.00	0.767	2.95	6.72	26.09	58.9	65.07	516	94.69
0.0114	0.00	0.0995	0.00	0.872	3.75	7.64	28.35	66.9	66.21	586	96.56
0.0129	0.00	0.113	0.00	0.991	4.58	8.68	30.79	76.0	67.43	666	98.08
0.0147	0.00	0.128	0.00	1.13	5.45	9.86	33.42	86.4	68.76	756	99.15
0.0167	0.00	0.146	0.00	1.28	6.39	11.2	36.23	98.1	70.19	859	99.79
0.0189	0.00	0.166	0.00	1.45	7.40	12.7	39.20	111	71.71	976	100.00
0.0215	0.00	0.188	0.00	1.65	8.51	14.5	42.27	127	73.29	1110	100.00
0.0244	0.00	0.214	0.00	1.88	9.71	16.4	45.37	144	74.90	1260	100.00
0.0278	0.00	0.243	0.00	2.13	11.01	18.7	48.41	163	76.55	1430	100.00
0.0315	0.00	0.276	0.00	2.42	12.39	21.2	51.31	186	78.23	1630	100.00
0.0358	0.00	0.314	0.00	2.75	13.84	24.1	53.96	211	79.96	1850	100.00
0.0407	0.00	0.357	0.00	3.12	15.34	27.4	56.33	240	81.79	2100	100.00
0.0463	0.00	0.405	0.16	3.55	16.91	31.1	58.37	272	83.74	2390	100.00
0.0526	0.00	0.460	0.46	4.03	18.53	35.3	60.10	310	85.83	2710	100.00
0.0597	0.00	0.523	0.91	4.58	20.25	40.1	61.56	352	88.03	3080	100.00
0.0679	0.00	0.594	1.50	5.21	22.06	45.6	62.82	400	90.30	3500	100.00
0.0771	0.00	0.675	2.19	5.92	24.00	51.8	63.96	454	92.56		

Measurement Details

File Path	R:\Malvern 3000\Measurement Data\32784-26.mmes	
Record Number	13	**Average Result Records**
Operator Name	efitzgerald	

Measurement Details

Chemist Signature EF 2015-04-28 **Reviewer Signature** KE 2015-04-29

Annotation

Particle Technology Labs 555 Rogers Street Downers Grove, IL 60515

Record Number	Sample Name	Signature State	Signatory	Signature Date
13	General Iron	Unsigned		

Malvern

GI0000038

Malvern 3000 Liquid Analysis (v.1)

Particle Technology Labs

Created by: pdenight
Last edited: 3/30/2015 3:11:39 PM

Information

Client	STACK TEST GROUP, INC.	**Sample Name**	General Iron
Test Method		**Sample ID**	Particulate Filter T3 and Probe Rinse T3
Chemist	EF	**PTL ID**	207165-26, 207166-26
SOP File Name	HydroMV.cfg	**Measurement Date Time**	4/28/2015 1:42:06 PM
Carrier	Aqueous	**Instrument Type**	Mastersizer3000
Notes			

Measurement Details

Particle Name	Default Malvern (1)	**Dispersant Name**	Water
Particle Refractive Index	1.520	**Dispersant Refractive Index**	1.330
Particle Absorption Index	1.000	**Analysis Model**	General Purpose
Laser Power	78.47 %	**Analysis Sensitivity**	Normal
Accessory Name	Hydro MV	**Accessory Serial No.**	MAL1090246
Laser Obscuration	10.86 %	**Instrument Serial No.**	MAL1087829
Virtual Lens Range		**Software Version**	3.0.1402.140
Is Particle Fraunhofer?	No	**Are particles non-spherical?**	Yes

Analysis Results

Dv (10)	1.87 µm	**Span**	18.966
Dv (50)	19.4 µm	**D [4,3]**	107 µm
Dv (90)	369 µm	**Weighted Residual**	0.31 %

Frequency (compatible) and Undersize

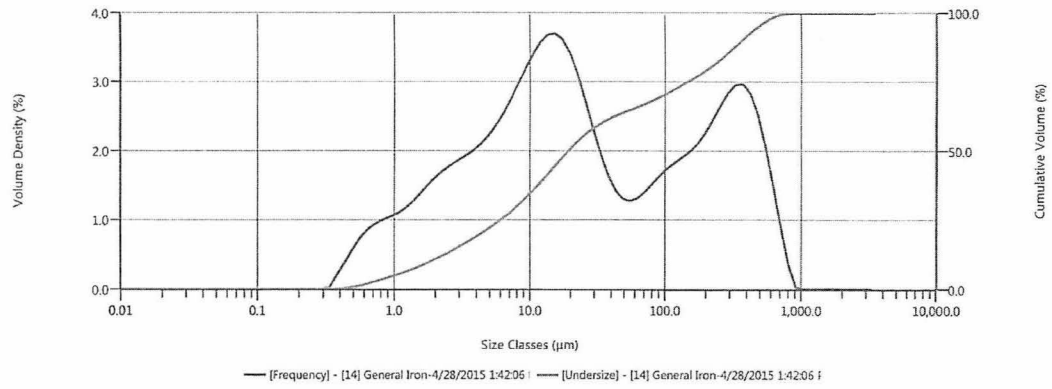

Measurement Details

File Path	R:\Malvern 3000\Measurement Data\32784-26.mmes		
Record Number	14	**Average Result Records**	
Operator Name	efitzgerald	**Original Record Number**	14

Measurement Details

Chemist Signature	EF 2015-04-28	**Reviewer Signature**	KA 2015-04-29

Malvern

GI0000039

Measurement Details

Client	STACK TEST GROUP, INC.	**Sample Name**	General Iron
Test Method		**Sample ID**	Particulate Filter T3 and Probe Rinse T3
Chemist	EF	**PTL ID**	207165-26, 207165-26
SOP File Name	HydroMV.cfg	**Measurement Date Time**	4/28/2015 1:42:06 PM
Carrier	Aqueous		
Notes			

Measurement Details

Particle Name	Default Malvern (1)	**Dispersant Name**	Water
Particle Refractive Index	1.520	**Dispersant Refractive Index**	1.330
Particle Absorption Index	1.000	**Analysis Model**	General Purpose
Laser Power	78.47 %	**Analysis Sensitivity**	Normal
Accessory Name	Hydro MV	**Accessory Serial No.**	MAL1090246
Instrument Type	Mastersizer3000	**Instrument Serial No.**	MAL1087829
Virtual Lens Range		**Software Version**	3.0.1402.140
Weighted Residual	0.31 %	**Are particles non-spherical?**	Yes
Is Particle Fraunhofer?	No	**Original Record Number**	14

Size (µm)	% Volume Under	Size (µm)	% Volume Under	Size (µm)	% Volume Under	Size (µm)	% Volume Under	Size (µm)	% Volume Under	Size (µm)	% Volume Under
0.0100	0.00	0.0876	0.00	0.767	3.04	6.72	26.77	58.9	65.21	516	96.01
0.0114	0.00	0.0995	0.00	0.872	3.87	7.64	29.05	66.9	66.30	586	97.73
0.0129	0.00	0.113	0.00	0.991	4.73	8.68	31.52	76.0	67.48	666	98.97
0.0147	0.00	0.128	0.00	1.13	5.63	9.86	34.17	86.4	68.75	756	99.73
0.0167	0.00	0.146	0.00	1.28	6.59	11.2	37.01	98.1	70.12	859	100.00
0.0189	0.00	0.166	0.00	1.45	7.64	12.7	39.99	111	71.58	976	100.00
0.0215	0.00	0.188	0.00	1.65	8.78	14.5	43.07	127	73.11	1110	100.00
0.0244	0.00	0.214	0.00	1.88	10.03	16.4	46.16	144	74.69	1260	100.00
0.0278	0.00	0.243	0.00	2.13	11.37	18.7	49.17	163	76.35	1430	100.00
0.0315	0.00	0.276	0.00	2.42	12.79	21.2	52.02	186	78.10	1630	100.00
0.0358	0.00	0.314	0.00	2.75	14.29	24.1	54.61	211	79.98	1850	100.00
0.0407	0.00	0.357	0.00	3.12	15.84	27.4	56.90	240	82.01	2100	100.00
0.0463	0.00	0.405	0.17	3.55	17.44	31.1	58.86	272	84.22	2390	100.00
0.0526	0.00	0.460	0.48	4.03	19.10	35.3	60.50	310	86.58	2710	100.00
0.0597	0.00	0.523	0.95	4.58	20.85	40.1	61.88	352	89.05	3080	100.00
0.0679	0.00	0.594	1.55	5.21	22.69	45.6	63.08	400	91.53	3500	100.00
0.0771	0.00	0.675	2.26	5.92	24.66	51.8	64.16	454	93.90		

Measurement Details

File Path	R:\Malvern 3000\Measurement Data\32784-26.mmes	
Record Number	14	**Average Result Records**
Operator Name	efitzgerald	

Measurement Details

Chemist Signature EF 2015-04-28 **Reviewer Signature** HG 2015-04-29

Annotation

Particle Technology Labs 555 Rogers Street Downers Grove, IL 60515

Record Number	Sample Name	Signature State	Signatory	Signature Date
14	General Iron	Unsigned		

Malvern

GI0000040

Malvern 3000 Liquid Analysis (v.1)

Particle Technology Labs

Created by: pdenight
Last edited: 3/30/2015 3:11:39 PM

Information

Client	STACK TEST GROUP, INC.	**Sample Name**	Average of 'General Iron'
Test Method		**Sample ID**	Particulate Filter T3 and Probe Rinse T3
Chemist	EF	**PTL ID**	207165-26, 207166-26
SOP File Name	HydroMV.cfg	**Measurement Date Time**	4/28/2015 1:38:59 PM
Carrier	Aqueous	**Instrument Type**	Mastersizer3000
Notes			

Measurement Details

Particle Name	Default Malvern (1)	**Dispersant Name**	Water
Particle Refractive Index	1.520	**Dispersant Refractive Index**	1.330
Particle Absorption Index	1.000	**Analysis Model**	General Purpose
Laser Power	78.47 %	**Analysis Sensitivity**	Normal
Accessory Name	Hydro MV	**Accessory Serial No.**	MAL1090246
Laser Obscuration	10.87 %	**Instrument Serial No.**	MAL1087829
Virtual Lens Range		**Software Version**	3.0.1402.140
Is Particle Fraunhofer?	No	**Are particles non-spherical?**	Yes

Analysis Results

Dv (10)	2.04 µm	**Span**	17.361
Dv (50)	21.6 µm	**D [4,3]**	111 µm
Dv (90)	378 µm	**Weighted Residual**	0.29 %

Frequency (compatible) and Undersize

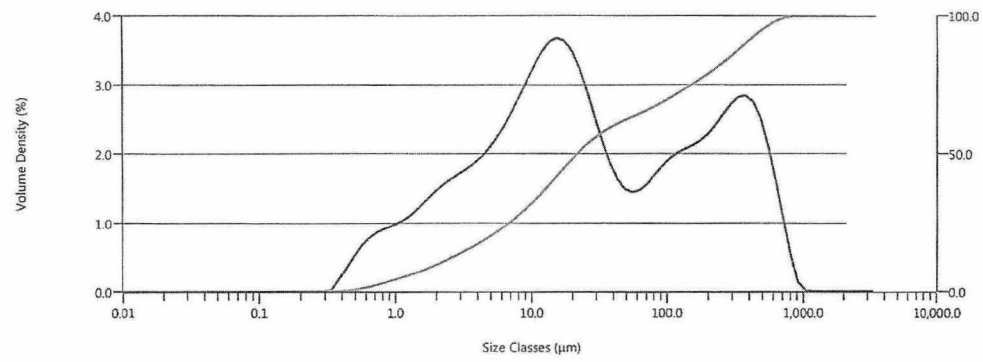

Measurement Details

File Path	R:\Malvern 3000\Measurement Data\32784-26.mmes		
Record Number	15	**Average Result Records**	11, 12, 13, 14
Operator Name	efitzgerald	**Original Record Number**	15

Measurement Details

Chemist Signature EF 2015-04-28 **Reviewer Signature** KS 2015-04-27

Malvern

GI0000041

Measurement Details

Client	STACK TEST GROUP, INC.	**Sample Name**	Average of 'General Iron'
Test Method		**Sample ID**	Particulate Filter T3 and Probe Rinse T3
Chemist	EF	**PTL ID**	207165-26, 207166-26
SOP File Name	HydroMV.cfg	**Measurement Date Time**	4/28/2015 1:38:59 PM
Carrier	Aqueous		
Notes			

Measurement Details

Particle Name	Default Malvern (1)	**Dispersant Name**	Water
Particle Refractive Index	1.520	**Dispersant Refractive Index**	1.330
Particle Absorption Index	1.000	**Analysis Model**	General Purpose
Laser Power	78.47 %	**Analysis Sensitivity**	Normal
Accessory Name	Hydro MV	**Accessory Serial No.**	MAL1090246
Instrument Type	Mastersizer3000	**Instrument Serial No.**	MAL1087829
Virtual Lens Range		**Software Version**	3.0.1402.140
Weighted Residual	0.29 %	**Are particles non-spherical?**	Yes
Is Particle Fraunhofer?	No	**Original Record Number**	15

Size (µm)	% Volume Under	Size (µm)	% Volume Under	Size (µm)	% Volume Under	Size (µm)	% Volume Under	Size (µm)	% Volume Under	Size (µm)	% Volume Under
0.0100	0.00	0.0876	0.00	0.767	2.79	6.72	24.78	58.9	63.95	516	95.45
0.0114	0.00	0.0995	0.00	0.872	3.55	7.64	26.96	66.9	65.17	586	97.22
0.0129	0.00	0.113	0.00	0.991	4.34	8.68	29.32	76.0	66.48	666	98.57
0.0147	0.00	0.128	0.00	1.13	5.17	9.86	31.88	86.4	67.89	756	99.47
0.0167	0.00	0.146	0.00	1.28	6.05	11.2	34.62	98.1	69.41	859	99.91
0.0189	0.00	0.166	0.00	1.45	7.01	12.7	37.53	111	71.02	976	100.00
0.0215	0.00	0.188	0.00	1.65	8.05	14.5	40.55	127	72.70	1110	100.00
0.0244	0.00	0.214	0.00	1.88	9.19	16.4	43.63	144	74.42	1260	100.00
0.0278	0.00	0.243	0.00	2.13	10.41	18.7	46.66	163	76.19	1430	100.00
0.0315	0.00	0.276	0.00	2.42	11.72	21.2	49.57	186	78.01	1630	100.00
0.0358	0.00	0.314	0.00	2.75	13.08	24.1	52.27	211	79.91	1850	100.00
0.0407	0.00	0.357	0.00	3.12	14.51	27.4	54.69	240	81.91	2100	100.00
0.0463	0.00	0.405	0.15	3.55	15.99	31.1	56.80	272	84.05	2390	100.00
0.0526	0.00	0.460	0.44	4.03	17.54	35.3	58.61	310	86.31	2710	100.00
0.0597	0.00	0.523	0.87	4.58	19.17	40.1	60.16	352	88.67	3080	100.00
0.0679	0.00	0.594	1.42	5.21	20.91	45.6	61.52	400	91.05	3500	100.00
0.0771	0.00	0.675	2.08	5.92	22.77	51.8	62.75	454	93.35		

Measurement Details

File Path	R:\Malvern 3000\Measurement Data\32784-26.mmes		
Record Number	15	**Average Result Records**	11, 12, 13, 14
Operator Name	efitzgerald		

Measurement Details

Chemist Signature EF 2015-04-28 **Reviewer Signature** KZ 2015-04-29

Annotation

Particle Technology Labs 555 Rogers Street Downers Grove, IL 60515

Record Number	Sample Name	Signature State	Signatory	Signature Date
15	Average of 'General Iron'	Unsigned		

Malvern

GI0000042

Appendix B

General Iron Industries, Inc.
Proposed Material Separation System
Criteria Pollutants Uncontrolled Emission Summary

Criteria Pollutants

Source	PM/PM10 * ton/yr	NOx ton/yr	CO ton/yr	SO_2 ton/yr	VOC ton/yr
Transfer Operations	0.26	---	---	---	---
Grinding Operations **	0.23	---	---	---	---
Material Separating Operations ***	3.50	---	---	---	---
Screening Operations	0.10	---	---	---	---
Total	**4.10**	**0.00**	**0.00**	**0.00**	**0.00**

* In order to represent worst-case emissions, all PM was assumed to be PM10.

** Grinding Operations involve 2 wire grinding/shredding units, each with potential PM emissions of less than 0.1 lb/hr and 0.44 tons/yr.

*** Material Separation Operations involve 8 separation devices, each with potential PM emissions of less than 0.1 lb/hr and 0.44 tons/yr (8 units x 0.1 lbs/hr x 8760 hrs/yr x 1 tons/2000 lbs = 3.50 tons/yr PM).

General Iron Industries, Inc.
Proposed Material Separation System
Particulate Matter Emissions from Transfer Operations

Potential to Emit Calculations

Transfer No.	Transfer Description		Estimated Throughput	Particulate Emission Factor	PM-10 Emission Factor	Uncontrolled Particulate Emissions		Uncontrolled PM10 Emissions	
-	From	To	lb/hr	lb/ton	lb/ton	lb/hr	ton/yr	lb/hr	ton/yr
1	Loading	Feed Hopper	3000	0.0030	0.0010	0.0045	0.0197	0.0015	0.0066
2	Feed Hopper	Infeed Conveyor	3000	0.0030	0.0010	0.0045	0.0197	0.0015	0.0066
3	Infeed Conveyor	Belt Magnet	3000	0.0030	0.0010	0.0045	0.0197	0.0015	0.0066
4	Belt Magnet	Ferrous Material	15	0.0030	0.0010	0.0000	0.0001	0.0000	0.0000
5	Ferrous Material Load-out	—	15	0.0030	0.0010	0.0000	0.0001	0.0000	0.0000
6	Belt Magnet	MCL Mill	2985	0.0030	0.0010	0.0045	0.0196	0.0015	0.0065
7	MCL Mill	Waste	478	0.0030	0.0010	0.0007	0.0031	0.0002	0.0010
8	Waste Load-out	—	478	0.0030	0.0010	0.0007	0.0031	0.0002	0.0010
9	MCL Mill	Vibratory Feeder	2507	0.0030	0.0010	0.0038	0.0165	0.0013	0.0055
10	Vibratory Feeder	Zig Zag	2507	0.0030	0.0010	0.0038	0.0165	0.0013	0.0055
11	Zig Zag	Heavies Conveyor	627	0.0030	0.0010	0.0009	0.0041	0.0003	0.0014
12	Heavies Conveyor	Vibratory Feeder	627	0.0030	0.0010	0.0009	0.0041	0.0003	0.0014
13	Vibratory Feeder	Drum Magnet	627	0.0030	0.0010	0.0009	0.0041	0.0003	0.0014
14	Drum Magnet	Ferrous Conveyor	13	0.0030	0.0010	0.0000	0.0001	0.0000	0.0000
15	Ferrous Conveyor	Ferrous Material	13	0.0030	0.0010	0.0000	0.0001	0.0000	0.0000
16	Ferrous Material Load-out	—	13	0.0030	0.0010	0.0000	0.0001	0.0000	0.0000
17	Drum Magnet	Vibratory Feeder	614	0.0030	0.0010	0.0009	0.0040	0.0003	0.0013
18	Vibratory Feeder	Rare Earth Magnet	614	0.0030	0.0010	0.0009	0.0040	0.0003	0.0013
19	Rare Earth Magnet	Stainless Conveyor	18	0.0030	0.0010	0.0000	0.0001	0.0000	0.0000
20	Stainless Conveyor	Stainless Product	18	0.0030	0.0010	0.0000	0.0001	0.0000	0.0000
21	Stainless Product Load-out	—	18	0.0030	0.0010	0.0000	0.0001	0.0000	0.0000
22	Rare Earth Magnet	Screen 1	596	0.0030	0.0010	0.0009	0.0039	0.0003	0.0013
23	Screen 1	Density Table	298	0.0030	0.0010	0.0004	0.0020	0.0001	0.0007
24	Density Table	Heavies Product Conveyor	271	0.0030	0.0010	0.0004	0.0018	0.0001	0.0006
25	Heavies Product Conveyor	Heavies Product	271	0.0030	0.0010	0.0004	0.0018	0.0001	0.0006
26	Heavies Product Load-out	—	271	0.0030	0.0010	0.0004	0.0018	0.0001	0.0006
27	Density Table	Aluminum Product Conveyor	27	0.0030	0.0010	0.0000	0.0002	0.0000	0.0001
28	Aluminum Product Conveyor	Aluminum Product	27	0.0030	0.0010	0.0000	0.0002	0.0000	0.0001
29	Aluminum Product Load-out	—	27	0.0030	0.0010	0.0000	0.0002	0.0000	0.0001
30	Screen 1	Bucket Conveyor	298	0.0030	0.0010	0.0004	0.0020	0.0001	0.0007
31	Bucket Conveyor	Large Heavies Conveyor	298	0.0030	0.0010	0.0004	0.0020	0.0001	0.0007
32	Large Heavies Conveyor	Density Table	298	0.0030	0.0010	0.0004	0.0020	0.0001	0.0007
33	Density Table	Heavies Product	30	0.0030	0.0010	0.0000	0.0002	0.0000	0.0001
34	Heavies Product Load-out	—	30	0.0030	0.0010	0.0000	0.0002	0.0000	0.0001
35	Density Table	Aluminum Product	268	0.0030	0.0010	0.0004	0.0018	0.0001	0.0006
36	Aluminum Product Load-out	—	268	0.0030	0.0010	0.0004	0.0018	0.0001	0.0006
37	Zig Zag	Lights Vibratory Feeder	1880	0.0030	0.0010	0.0028	0.0124	0.0009	0.0041
38	Vibratory Feeder	Rare Earth Magnet	1880	0.0030	0.0010	0.0028	0.0124	0.0009	0.0041
39	Rare Earth Magnet	Zig Zag	470	0.0030	0.0010	0.0007	0.0031	0.0002	0.0010
40	Zig Zag	Waste	423	0.0030	0.0010	0.0006	0.0028	0.0002	0.0009
41	Waste Load-out	—	423	0.0030	0.0010	0.0006	0.0028	0.0002	0.0009
42	Zig Zag	Vibratory Feeder	47	0.0030	0.0010	0.0001	0.0003	0.0000	0.0001
43	Vibratory Feeder	Drum Magnet	47	0.0030	0.0010	0.0001	0.0003	0.0000	0.0001
44	Drum Magnet	Nonferrous Conveyor	28	0.0030	0.0010	0.0000	0.0002	0.0000	0.0001
45	Nonferrous Conveyor	Nonferrous Product	28	0.0030	0.0010	0.0000	0.0002	0.0000	0.0001
46	Nonferrous Product Load-out	—	28	0.0030	0.0010	0.0000	0.0002	0.0000	0.0001
47	Drum Magnet	Ferrous Conveyor	19	0.0030	0.0010	0.0000	0.0001	0.0000	0.0000
48	Ferrous Conveyor	Ferrous Product	19	0.0030	0.0010	0.0000	0.0001	0.0000	0.0000

Continued on Next Page

General Iron
Proposed Metal Wire Recycling Facility
Particulate Matter Emissions from Transfer Operations - Continued

Potential to Emit Calculations

Transfer No.	Transfer Description		Estimated Throughput	Particulate Emission Factor	PM10 Emission Factor	Uncontrolled Particulate Emissions		Uncontrolled PM10 Emissions	
-	From	To	lb/hr	lb/ton	lb/ton	lb/hr	ton/yr	lb/hr	ton/yr
49	Ferrous Product Load-out	—	19	0.0030	0.0010	0.000	0.000	0.000	0.000
50	Rare Earth Magnet	Dosing Hopper	1410	0.0030	0.0010	0.002	0.009	0.001	0.003
51	Dosing Hopper	Turbo Mill	1410	0.0030	0.0010	0.002	0.009	0.001	0.003
52	Turbo Mill	Density Table	1410	0.0030	0.0010	0.002	0.009	0.001	0.003
53	Density Table	Copper Product	141	0.0030	0.0010	0.000	0.001	0.000	0.000
54	Copper Product Load-out	—	141	0.0030	0.0010	0.000	0.001	0.000	0.000
55	Density Table	Tailings Conveyor	635	0.0030	0.0010	0.001	0.004	0.000	0.001
56	Tailings Conveyor	Screen 2	635	0.0030	0.0010	0.001	0.004	0.000	0.001
57	Screen 2	Copper Fines	51	0.0030	0.0010	0.000	0.000	0.000	0.000
58	Copper Fines Load-out	—	51	0.0030	0.0010	0.000	0.000	0.000	0.000
59	Screen 2	Waste	584	0.0030	0.0010	0.001	0.004	0.000	0.001
60	Waste Load-out	—	584	0.0030	0.0010	0.001	0.004	0.000	0.001
61	Density Table	Metals Screen	635	0.0030	0.0010	0.001	0.004	0.000	0.001
62	Metals Screen	Density Table	318	0.0030	0.0010	0.000	0.002	0.000	0.001
63	Density Table	Copper Conveyor	302	0.0030	0.0010	0.000	0.002	0.000	0.001
64	Copper Conveyor	Copper Product	302	0.0030	0.0010	0.000	0.002	0.000	0.001
65	Copper Product Load-out	—	302	0.0030	0.0010	0.000	0.002	0.000	0.001
66	Density Table	Aluminum Conveyor	16	0.0030	0.0010	0.000	0.000	0.000	0.000
67	Aluminum Conveyor	Aluminum Product	16	0.0030	0.0010	0.000	0.000	0.000	0.000
68	Aluminum Product Load-out	—	16	0.0030	0.0010	0.000	0.000	0.000	0.000
69	Metals Screen	Density Table	318	0.0030	0.0010	0.000	0.002	0.000	0.001
70	Density Table	Copper Conveyor	302	0.0030	0.0010	0.000	0.002	0.000	0.001
71	Copper Conveyor	Copper Product	302	0.0030	0.0010	0.000	0.002	0.000	0.001
72	Copper Product Load-out	—	302	0.0030	0.0010	0.000	0.002	0.000	0.001
73	Density Table	Aluminum Conveyor	16	0.0030	0.0010	0.000	0.000	0.000	0.000
74	Aluminum Conveyor	Aluminum Product	16	0.0030	0.0010	0.000	0.000	0.000	0.000
75	Aluminum Product Load-out	—	16	0.0030	0.0010	0.000	0.000	0.000	0.000
					Total	0.060	0.263	0.020	0.088

GI0000046

General Iron Industries, Inc.
Proposed Material Separation System
Particulate Matter Emissions from Wire Cutting Operations

Potential to Emit Calculations

Unit	Material Throughput lb/hr	Particulate Emission Factor lb/ton	Uncontrolled Particulate Emissions	
			lb/hr	ton/yr
MCL Mill	2,985	0.0240	0.04	0.16
Turbo Mill	1,410	0.0240	0.02	0.07
			0.05	0.23

General Iron Industries, Inc.
Proposed Material Separation System
Particulate Matter Emissions from Screening Operations

Potential to Emit Calculations

Unit	Material Throughput lb/hr	Particulate Emission Factor lb/ton	PM10 Emission Factor lb/ton	Uncontrolled Particulate Emissions		Uncontrolled PM10 Emissions	
				lb/hr	ton/yr	lb/hr	ton/hr
Screen 1	596	0.0250	0.0087	0.01	0.03	0.00	0.01
Screen 2	635	0.0250	0.0087	0.01	0.03	0.00	0.01
Metals Screen	635	0.0250	0.0087	0.01	0.03	0.00	0.01
			Total	0.023	0.102	0.008	0.036

Appendix C

Separators series ROBI and series F

Separators series ROBI and series F have been designed to separate granulated materials, ground stuff, and grains having the same particle size but different specific weight. The continuous running and the wide range of adjustment make the separators particularly suitable for their insertion in recycling plants.

Some example of use:

- Recovery of metals from electric cables (separation of copper and aluminium; separation of copper or aluminium from PVC or rubber).
- Appliance in plastic industries (separation of plastics from metals, sand, stones, fibers, etc.).
- Appliance in woodworking industries (separation of wood from metals, sand, stones, glass, etc.).

Technical data

SEPARATORS

	Length	Width	Height	Weight	Power	Production
F15 EKO NEW	1.060 mm	810 mm	855 mm	192 kg	0,76 kW	(*)
F30 EKO NEW	1.350 mm	1.350 mm	1.160 mm	535 kg	1,8 kW	(*)
F50	1.900 mm	1.800 mm	3.000 mm	950 kg	5 kW	(*)
ROBI 71	1.730 mm	1.415 mm	1.858 mm	910 kg	3 kW	(*)
ROBI 151	2.050 mm	1.815 mm	2.553 mm	1.360 kg	5,5 kW	(*)

(*) Changeable according to the kind of processed material.

Request quote

SINCRO EKO

Construction Division

GI0000050

SINCRO C
SINCRO MILL
WIRE PRO
PLANTS
WEEE (E-WASTE)
PRE-SHREDDERS
PULVERIZER
SEPARATORS
AUXILIARY EQUIPMENT

PRODUCTS

News Privacy Legal notice Site Map Contact us
Copyright © 2015 Guidetti S.r.l - P.IVA 01460390386. All rights reserved.

To provide the best possible service, we use cookies on this site.
Continuing the navigation you consent to use them.
About cookie CLOSE X

Description: MC Crusher

Combines impact crushing with systematic material shaping by granulation applications

02.2010

GI0000052

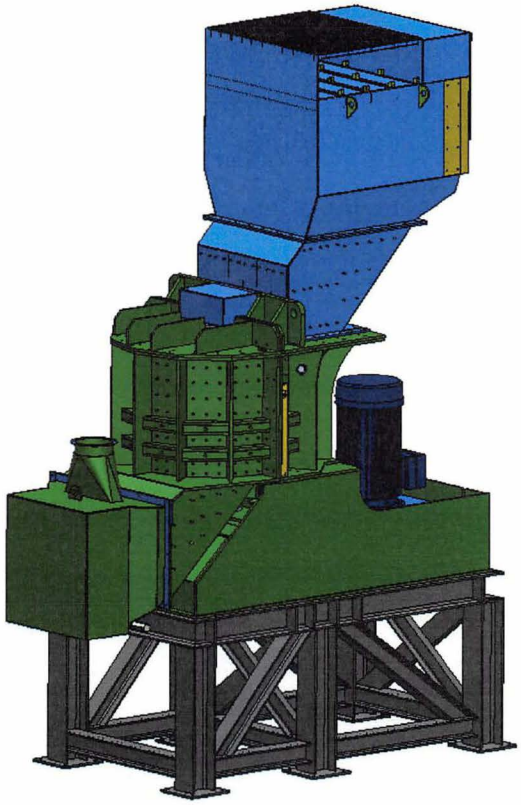

Fig. 1: Grinder Mill series MC - Machine

This machine is used for material processing in the form of:

- **Shredding,**
- **Down-Sizing,**
- **Cleaning,**
- **Ball-Shaping,**
- **Disagglomeration, and**
- **Selective Crushing**

for various materials in **Recycling,** in the **Production of Building Materials,** and in **Mineral Processing.**

Machine:

The MC Grinder Mill is used for downsizing of various materials in the fields of recycling, building materials as well as mineral processing industry.

Principle:

The working principle is a combination of impact crushing and an optionally forced passage through grids. Doing so, the machine can be applied as a classical rotor impact mill or in the form of a combined granulator mill. This machine has a vertical rotor shaft holding flexibly mounted impact tools which are arranged in various levels.

Purpose of the machine:

Material down-sizing, material cleaning, particle ball shaping, disagglomeration, selective crushing

Input material types:

Material being generally able to be crushed, e.g. WEEE scrap, Automotive Shredder Residue (ASR), various materials coming from screening drums, minerals and other brittle fracturing materials, maximum input particle size is limited by the inlet geometrics of the machine.

Output material:

Down-sized, deformed and cleaned material as well as fines (dust) generated by the crushing process

Process:

The material is fed into the machine through the input chute which is realized by commercially available feeding systems for bulky material; such as box feeders, belt or chain conveyors. There is a limitation given by the geometry of the free cross-sectional feeding area. The grinding chamber is divided in two sections which are in each case bounded below by an exchangeable grid (see fig. 2).

The upper grinding chamber is used for the impact crushing process. Therefore, various levels of flexible impact tools are mounted on the vertical rotor shaft.

Fig. 2: Processing chamber, rotor, tools, grids

The material accelerates to wear-resistant plates being fixed on the body. Doing so, it crushes by the absorbed impact energy. The material running through different tool levels must pass a grid at the bottom of the first process region.

Entering the second grinding area the particles interact with a further level of flexibly mounted rotating impact tools. In addition to the impact to the outside there is a granulation effect caused by a second grid at the bottom of the granulation area.

The result is a material with an exactly defined output particle size due to the grid opening geometry.

The grinder mill can be used as a pure rotor impact mill by taking away both grids.

The machine is adaptable to the material to be treated by changing the shape and number of tools, the number and geometry of grids as well as the rotor speed and the intensity of feeding flow.

The material outlet of the grinder mill is made by conveyors which are normally used for bulky material.

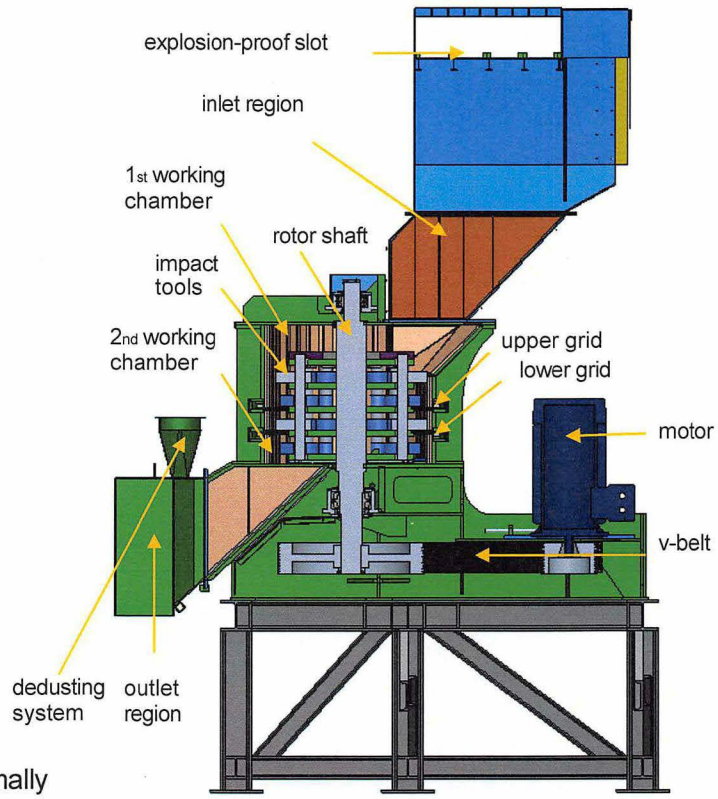

Fig. 3: Cross-sectional view

Drive System:

The drive is built by a v-belt system. The rotor speed can be easily modified by changing diameters of the v-belt pulleys. During operation the flexibility in speed is given by using a frequency converter for the electric motor.

Maintenance:

The machine is built on a fixed supporting steel frame. The front half shell of the machine body is fixed on hinges and can be opened by hand (see fig. 4). Based on such a design the access to the interior of the machine for maintenance is very easy, e. g. the exchange of the grids which are also built as two half-rings.

Optionally a crane can be installed to facilitate maintenance. Therefore it is very easy to change to tools, the grids and if it is necessary to change the rotor.

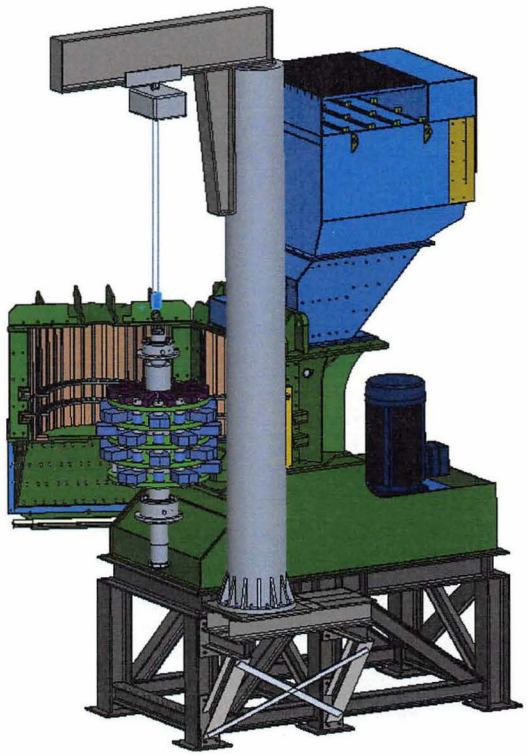

Fig. 4: Maintenance access

Operational safety:

Various measures have been integrated in machine control to protect operators and maintenance people against accidents and bodily injuries, e. g. emergency-stop, observation of machine vibrations, rotor speed observation to avoid an opening when the machine is running and a safety switch system which blocks the machine for maintenance purpose.

Fire protection:
Optionally and depending on the processing material

In order to protect people, machine and environment against fire caused by flying sparks, there is a fire detection and extinction system mounted at the outlet of the grinder mill. Spark detectors via infrared sensors detect glowing parts in the outlet material flow.
In the case of positive detection of sparks, a water spray is generated to extinguish the hot particles. At the same time, the production continues without interruption.

Additional characteristics (specifying the type series, not a single machine):

- Dimensions: length, width and height according to size type
- Rotor: vertical
- Grids: exchangeable respectively operation without grid(s) possible
- Maximum input particle size: depends on geometry of the inlet chute
- Weight of the machine: approx. 8 – 25 t depending on size type
- Drive: electric motor with optional frequency converter / multiple v-belt drive
- Installed motor power: approx. 90 – 400 KW
- Rotor speed/peripheral speed tool outside diameter: up to 70 m/s
- Rotation direction of the rotor: reversible
- Dedusting system: required 6000 – 10000 m³/h

Machine characteristics are subject to change without notice.

Contact:

KM Key Machinery GmbH
Gewerbepark See 10 e
87477 Sulzberg Germany
Fon: +49 8376-921828-0
Fax: +49 8376-921828-99
Email: info@km-recycling.de
Web: www.km-recycling.de

Pulverizer series TURBO

Pulverizer series TURBO mills introduces a new concept of dry-milling, which consists in the self-grinding of the materials through the collision and the friction among the particles, thanks to vortex, changes in pressure and fluid vibrations which allow a progressive dimensional reduction with no need of grinding elements.

Wide range of applications:

Minerals: clay, coal, graphite, gypsum, marble, lime, limestone, ceramic materials.

Plastics: thermoplastics, caoutchouc, rubber, resin, foils, cellulose.

Chemicals: gelatin, pigments, lamp-black, metallic salts, carbonates, sulphates, chlorides.

Metals: aluminium, magnesium, copper, wolfram, carbide, chrome oxide, nickel.

Foods: proteins, starch, cereals, seed, bran, husks, vegetables, spices, legumes.

Miscellaneous: woods, bark, peat, straw, yeast, husks, fibres, bones, paper, wax, fats.

The advantages of the "TURBO" mills are as follows:

1. A reduction of energy consumption and lower in maintaining costs compared to any other type of mill.
2. Concentration of the wear on small surfaces which can be easily replaced.
3. A very simple operating system and small overall dimensions.

Technical data

TURBO SERIES

	Length	Width	Height	Weight	Power	Production
TURBO 625/2	1.850 mm	1.126 mm	1.206 mm	1.500 kg	37 kW	(*)
TURBO 625/3	1.850 mm	1.126 mm	1.206 mm	1.500 kg	37 kW	(*)
TURBO 625/4	2.290 mm	1.125 mm	1.233 mm	1.700 kg	75 kW	(*)
TURBO 900/5	2.197 mm	1.360 mm	1.722 mm	4.640 kg	110 kW	(*)

GI0000058

(*) Changeable according to the kind of processed material.

Request quote

SINCRO EKO

SINCRO C

SINCRO MILL

WIRE PRO

PLANTS

WEEE (E-WASTE)

PRE-SHREDDERS

PULVERIZER

SEPARATORS

AUXILIARY EQUIPMENT

Construction Division

PRODUCTS

Copyright © 2015 Guidetti S.r.l - P.IVA 01460390386. All rights reserved.

To provide the best possible service, we use cookies on this site.
Continuing the navigation you consent to use them. About cookie CLOSE X