ANNUAL RELATIVE ACCURACY TEST REPORT #13022R

Text and Appendices

PERFORMED FOR:

COVANTA ENERGY GROUP, INC.

Morristown, New Jersey

at the

Huntington Resource Recovery Facility

Huntington, New York

Units 1, 2, and 3 SDA Inlets and FF Outlets

August 2013

by

TESTAR Engineering, P.C.

7424-108 ACC Boulevard

Raleigh, North Carolina 27617

License Number C-3896

919/957-9500

PE CERTIFICATION
REPORT #13022R

I hereby certify that I have personally examined and am familiar with the information submitted herein. Based upon my own knowledge and my inquiry of those individuals responsible for obtaining the information presented, the foregoing information is true, accurate and complete. I am aware that this information is being requested for the purpose of determining compliance with local, state, and federal laws and may be submitted to appropriate governmental regulatory agencies for those purposes. I am aware that there are significant penalties for submitting false information to such agencies, including the possibility of fine and imprisonment.

Signature: _____ Date: 10/8/13

Gary L. Williams, PE, QSTI
Director

Professional Engineer, State of New York

Seal Number 080333

TABLE OF CONTENTS

1 Introduction 1-1
1.1 General 1-1
1.2 Test Personnel 1-1
2 Summary of Results 2-1
2.1 Report Organization 2-1
2.2 Presentation of Results 2-1
3 Process Description and Operation 3-1
4 Sampling and Analytical Methods 4-1
4.1 Relative Accuracy Test Equipment 4-1
4.2 RATA Test Procedures 4-2
5 QA/QC Results 5-1
5.1 QA/QC Policy Procedures 5-1

Appendices:
A. Relative Accuracy Test Results 1
B. Reference Method Field Data, (O_2, CO_2, SO_2, NO_x, CO) 50
C. Source CEMS Data Printouts, (O_2, CO_2, SO_2, NO_x, CO) 122
D. Reference Method Field Data, (Flow Rate, Moisture) 185
E. Reference Method Calibration Data 222

LIST OF TABLES

Table 1-1 Test Personnel 1-1
Table 2-1 Relative Accuracy Test Audit Summary 2-2
Table 3-1 Source CEMS Analyzers 3-2
Table 4-1 Reference Method Analyzers 4-2
Table 5-1 Summary of QA/QC Procedures 5-1
Table 5-2 Reference Method Calibration Gas Values 5-1

LIST OF FIGURES

Figure 4-1 FF Outlet Sample Location Diagram 4-4
Figure 4-2 SDA Inlet Sample Location Diagram 4-5

1 INTRODUCTION

1.1 General

Covanta Energy Group, Inc. contracted TESTAR Engineering, P. C. to conduct an Annual Relative Accuracy Test Audit on the CEM systems serving the SDA Inlet and FF Outlet of Units 1, 2, and 3. The testing was performed at the Huntington Resource Recovery Facility in Huntington, New York. The relative accuracy test results satisfied the requirements of 40 CFR Part 60, Appendix B and F. The test program was conducted between August 27 and 29, 2013 by TESTAR Engineering, P. C. under the supervision of Mr. Mark Ritchie of Covanta Energy Group, Inc.

1.2 Test Personnel

Table 1-1 presents the personnel that were involved in the testing program.

Table 1-1
Test Personnel

Affiliation	Personnel Responsibility
Covanta Energy Group, Inc.	Mark Ritchie Test Coordinator
TESTAR Engineering, P. C.	David Brintle Project Director
	Phil Juneau CEM Operator
	Blake Cone Field Lab Engineer
	Eddie King Field Engineer

2 SUMMARY OF RESULTS

2.1 Report Organization

The results of the testing project are summarized in Section 2. The process tested is discussed in Section 3. The sampling and analytical methods utilized are discussed in Section 4 while the Quality Assurance/Quality Control results are presented in Section 5. Appendix A contains detailed results of the testing program. Appendix B contains Reference Method Field Data for O_2, CO_2, SO_2, NO_x and CO. Appendix C contains the Source Data CEMS Printouts for O_2, CO_2, SO_2, NO_x and CO. Appendix D contains the reference method field data used for calculating flow rates and Appendix E contains all reference method calibration data. Refer to the Table of Contents and the List of Tables for a complete reference with appropriate page numbers.

2.2 Presentation of Results

Table 2-1 presents the results of the Relative Accuracy Tests. A more detailed summary of sampling gas parameters is presented in Appendix A.

Table 2-1
Relative Accuracy Test Audit Summary

Parameter	Serial Number	Location	Units	Result	Specification
Oxygen	3335	Unit 1 Inlet	Dry Volume %	0.1 %	≤ 1.0% Absolute Mean Difference [1]
	WO4036 O2	Unit 1 Outlet	Dry Volume %	0.4 %	≤ 1.0% Absolute Mean Difference [1]
Carbon Dioxide	A08-362	Unit 1 Inlet	Dry Volume %	0.4 %	≤ 1.0% Absolute Mean Difference [1]
	A08-361	Unit 1 Outlet	Dry Volume %	0.1 %	≤ 1.0% Absolute Mean Difference [1]
Sulfur Dioxide	AX-921-9646-2	Unit 1 Inlet	ppm @ 7% O_2	7.6 %	≤ 20% Relative Accuracy [2]
	AX-921-9646-1	Unit 1 Outlet	ppm @ 7% O_2	1.4 %	≤ 20% of applicable Standard [2]
Nitrogen Oxides	WO4036 NOx	Unit 1 Outlet	ppm @ 7% O_2	2.3 %	≤ 20% Relative Accuracy [2]
			lb NO_x/hr	6.3 %	≤ 20% Relative Accuracy [4]
Carbon Monoxide	0636119863L	Unit 1 Outlet Low	ppm @ 7% O_2	2.1 %	≤ 5% of Standard [3]
	0636119863H	Unit 1 Outlet High	ppm @ 7% O_2	2.1 %	≤ 5% of Standard [3]
Oxygen	3337	Unit 2 Inlet	Dry Volume %	0.2 %	≤ 1.0% Absolute Mean Difference [1]
	WO4037 O2	Unit 2 Outlet	Dry Volume %	0.2 %	≤ 1.0% Absolute Mean Difference [1]
Carbon Dioxide	A08-363	Unit 2 Inlet	Dry Volume %	0.1 %	≤ 1.0% Absolute Mean Difference [1]
	A08-369	Unit 2 Outlet	Dry Volume %	0.1 %	≤ 1.0% Absolute Mean Difference [1]
Sulfur Dioxide	AX-921-9646-4	Unit 2 Inlet	ppm @ 7% O_2	6.8 %	≤ 20% Relative Accuracy [2]
	AX-921-9646-3	Unit 2 Outlet	ppm @ 7% O_2	1.4 %	≤ 20% of applicable Standard [2]
Nitrogen Oxides	WO4037 NOx	Unit 2 Outlet	ppm @ 7% O_2	1.0 %	≤ 20% Relative Accuracy [2]
			lb NO_x/hr	11.1 %	≤ 20% Relative Accuracy [4]
Carbon Monoxide	0636119864L	Unit 2 Outlet Low	ppm @ 7% O_2	2.0 %	≤ 5% of Standard [3]
	0636119864H	Unit 2 Outlet High	ppm @ 7% O_2	2.1 %	≤ 5% of Standard [3]
Oxygen	3343	Unit 3 Inlet	Dry Volume %	0.2 %	≤ 1.0% Absolute Mean Difference [1]
	WO4038 O2	Unit 3 Outlet	Dry Volume %	0.0 %	≤ 1.0% Absolute Mean Difference [1]
Carbon Dioxide	A08-368	Unit 3 Inlet	Dry Volume %	0.3 %	≤ 1.0% Absolute Mean Difference [1]
	A08-367	Unit 3 Outlet	Dry Volume %	0.0 %	≤ 1.0% Absolute Mean Difference [1]
Sulfur Dioxide	AX-921-9646-6	Unit 3 Inlet	ppm @ 7% O_2	3.6 %	≤ 20% Relative Accuracy [2]
	AX-921-9646-5	Unit 3 Outlet	ppm @ 7% O_2	3.7 %	≤ 20% of applicable Standard [2]
Nitrogen Oxides	WO 4038 NOx	Unit 3 Outlet	ppm @ 7% O_2	1.0 %	≤ 20% Relative Accuracy [2]
			lb NO_x/hr	5.8 %	≤ 20% Relative Accuracy [4]
Carbon Monoxide	0636119865L	Unit 3 Outlet Low	ppm @ 7% O_2	9.7 %	≤ 10% Relative Accuracy [3]
	0636119865H	Unit 3 Outlet High	ppm @ 7% O_2	9.7 %	≤ 10% Relative Accuracy [3]

1 40CFR60, Appendix B, Performance Specification 3 for O_2 and CO_2, Section 13.2.
2 40CFR60, Appendix B, Performance Specification 2 for NO_x and SO_2, Section 13.2.
3 40CFR60, Appendix B, Performance Specification 4A for CO, Section 13.2
4 40CFR60, Appendix B, Performance Specification 6 for Continuous Emission Rate Monitoring Systems, Section 13.2.

3 PROCESS DESCRIPTION AND OPERATION

The Huntington Resource Recovery Facility processes up to 350,000 tons of solid waste each year, generating up to 27.5 megawatts of electricity. The facility was designed and built and is owned and operated by Covanta Projects, of Huntington, Inc. Each of the three (3) Martin GmbH waterwall furnaces has a nominal design capacity of 250 tons of waste per day. Waste is combusted at furnace temperatures exceeding 1,800 degrees Fahrenheit and reduced to an inert ash residue. Before leaving the facility, combustion air is directed through technologically advanced air pollution control equipment consisting of spray dryer absorbers (SDA), selective non-catalytic reduction (SCNR), carbon injection system, and fabric filter (FF) baghouses.

The CEMS serving Units 1, 2, and 3 consist of SO_2, NO_x, CO, O_2, and CO_2 analyzers, a dry extractive sampling system, opacity monitors, and a microcomputer based DAS. Descriptions of the analyzers are listed in Table 3-1.

Table 3-1
Source CEMS Analyzers

Pollutant Monitor	Unit	Location	Range	Analyzer	Serial Number
O_2	1	Inlet	0-25%	Servomex 1440	3335
CO_2	1	Inlet	0-20%	Siemens Ultramat	A08-362
SO_2	1	Inlet	0-500 ppm	Western Research 921	AX-921-9646-2
O_2	1	Stack	0-25 %	CAI 650	WO4036 O2
CO_2	1	Stack	0-20 %	Siemens Ultramat	A08-361
SO_2	1	Stack	0-200 ppm	Western Research 921	AX-921-9646-1
NO_x	1	Stack	0-500 ppm	CAI 650	WO4036 NOx
CO	1	Stack	0-200 ppm 0-2000 ppm	TECO 48i	0636119863
O_2	2	Inlet	0-25%	Servomex 1440	3337
CO_2	2	Inlet	0-20%	Siemens Ultramat	A08-363
SO_2	2	Inlet	0-500 ppm	Western Research 921	AX-921-9646-4
O_2	2	Stack	0-25 %	CAI 650	WO4037 O2
CO_2	2	Stack	0-20 %	Siemens Ultramat	A08-369
SO_2	2	Stack	0-200 ppm	Western Research 921	AX-921-9646-3
NO_x	2	Stack	0-500 ppm	CAI 650	WO4037 NOx
CO	2	Stack	0-200 ppm 0-2000 ppm	TECO 48i	0636119864
O_2	3	Inlet	0-25%	Servomex 1440	3343
CO_2	3	Inlet	0-20%	Siemens Ultramat	A08-368
SO_2	3	Inlet	0-500 ppm	Western Research 921	AX-921-9646-6
O_2	3	Stack	0-25 %	CAI 650	WO4038 O2
CO_2	3	Stack	0-20 %	Siemens Ultramat	A08-367
SO_2	3	Stack	0-200 ppm	Western Research 921	AX-921-9646-5
NO_x	3	Stack	0-500 ppm	CAI 650	WO4038 NOx
CO	3	Stack	0-200 ppm 0-2000 ppm	TECO 48i	0636119865

4 SAMPLING AND ANALYTICAL METHODS

TESTAR Engineering, P.C. was contracted to conduct a Relative Accuracy Test Audit (RATA) of oxygen (O_2), carbon monoxide (CO), sulfur dioxide (SO_2), nitrogen oxides (NOx) and carbon dioxide (CO_2) on the inlets and outlets of Units 1, 2, and 3.

4.1 Relative Accuracy Test Equipment

TESTAR Engineering's extractive measurement system and all sampling and data reduction procedures conform with the requirements of Performance Specifications 2, 3, 4A, and EPA Methods 3A, 6C, 7E, and 10 of 40 CFR 60, and the Quality Assurance Procedures of Appendix F.

The effluent gas sample was conditioned to eliminate interference from water vapor and particulate matter before being introduced into each analyzer. All components of the sampling system that contact the sample were either glass, stainless steel, or Teflon. A heated probe and particulate filter, heated sample lines, primary moisture removal trap, sample pump, secondary moisture removal system, and distribution manifold board were used to deliver a sample of flue gas to the analyzers. The sampling probe and filter housing was constructed of Type 316 stainless steel and was heated to maintain the sample temperature above the dew point.

The condenser was an ice bath, Teflon coil condenser that provided excellent condensate separation and optimum drying of the sample gas. A peristaltic pump continuously removed condensate from a knockout at the base of the coil.

The dry sample exited the condenser and was then transported through unheated 3/8-inch O.D. Teflon tubing by way of a Teflon-lined sample pump to the flow distribution manifold board, where the flow to the analyzers was monitored and controlled.

A three-way valve located on the manifold board delivered calibration gas to two locations: (1) immediately upstream of the analyzers for calibration error checks, and (2) at the outlet of the probe for the sampling system bias and calibration drift checks.

Table 4-1 lists the gas analyzers that were used during this test program.

Table 4-1
Reference Method Analyzers

Parameter	Analyzer	Model	Serial Number	Range	Operational Principle
O_2 Inlet	Servomex	1420	01420/B175	0 – 25 %	Paramagnetic
CO2 Inlet	California Analytical	ZRH	ZRH1BEY2-6BAYY	0 – 20 %	Paramagnetic
SO_2 Inlet	Western Research	721	89-721AT2-7587-2	0 – 500 ppm	Ultraviolet Differential Absorption
O_2 Outlet	Servomex	1420	01420/B180	0 – 25 %	Paramagnetic
SO_2 Outlet	Western Research	721	89-721AT2-7587-3	0 – 100 ppm	Ultraviolet Differential Absorption
NO_x Outlet	TECO	10S	10S-45502-274	0 – 500 ppm	Chemiluminescence
CO/CO_2 Outlet	Teledyne API	300EM	224	0 – 100 ppm 0 – 20 %	Gas Filter Correlation

4.2 RATA Test Procedures

The reference test method procedures used for the RATA test program were instrumental test methods. They were conducted in accordance with 40 CFR 60, Appendix B, Performance Specifications 2, 3, and 4A and Appendix F. Relative accuracies were calculated according to the appropriate emission standards. To satisfy the RATA requirements of 40 CFR 60, Appendix B and F, the relative accuracy must not exceed 20.0 percent of the mean of the reference method or 10.0 percent of the applicable standard for NO_x, and must not exceed 10.0 percent of the mean of the reference method, 5% of the applicable standard, or a mean difference of $\pm$5ppm plus the confidence coefficient for CO. To satisfy the RATA requirements of 40 CFR 60, Appendix B, the relative accuracy must not exceed 20.0 percent of the mean of the reference method or 20.0 percent of the applicable standard for SO_2 since the source qualifies as a low emitter with an applicable emission standard of ~0.1 Lb/MMBtu. The relative accuracy for O_2 and CO_2 must not exceed an absolute mean difference of $\pm$1.0%.

The RATA was conducted while the unit operated at greater than 50% of capacity. The traverse sampling points were located so as to establish a "measurement line" through the centroidal area of the duct. The test points for the RATAs were located at 16.7%, 50.0%, and 83.3% of the internal diameter of the duct. Figure 4-1 presents a schematic of the sampling point locations for the Unit 1, 2, and 3 SDA Inlets. Figure 4-2 presents a schematic of the sampling point locations for the Unit 1, 2, and 3 FF Outlets.

EPA Test Methods 3A, 6C, 7E, and 10 were used as the reference methods for measuring O_2, CO_2, SO_2, NO_x, and CO. These methods are instrumental procedures. A sample was continuously extracted from the effluent stack gas stream. A portion of the sample stream was conveyed to each analyzer for the determination of O_2, CO_2, SO_2, NO_x, and CO.

For each EPA Reference Method determination, the flue gas was sampled at three traverse points. The difference between the reference method sample and the monitor's reading was evaluated from a minimum of nine test runs.

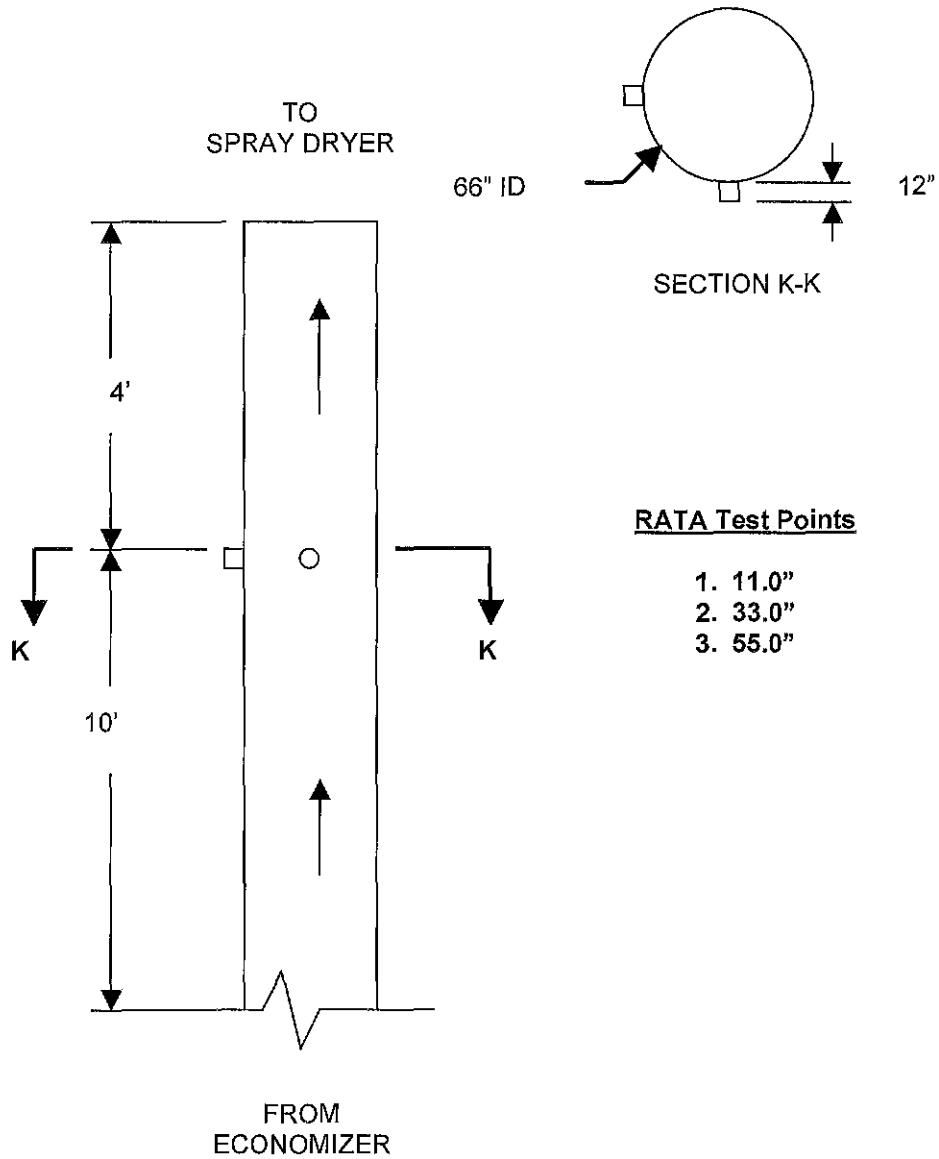

Figure 4-1. SDA Inlet Sampling Location
(Units 1, 2, & 3 are identical)

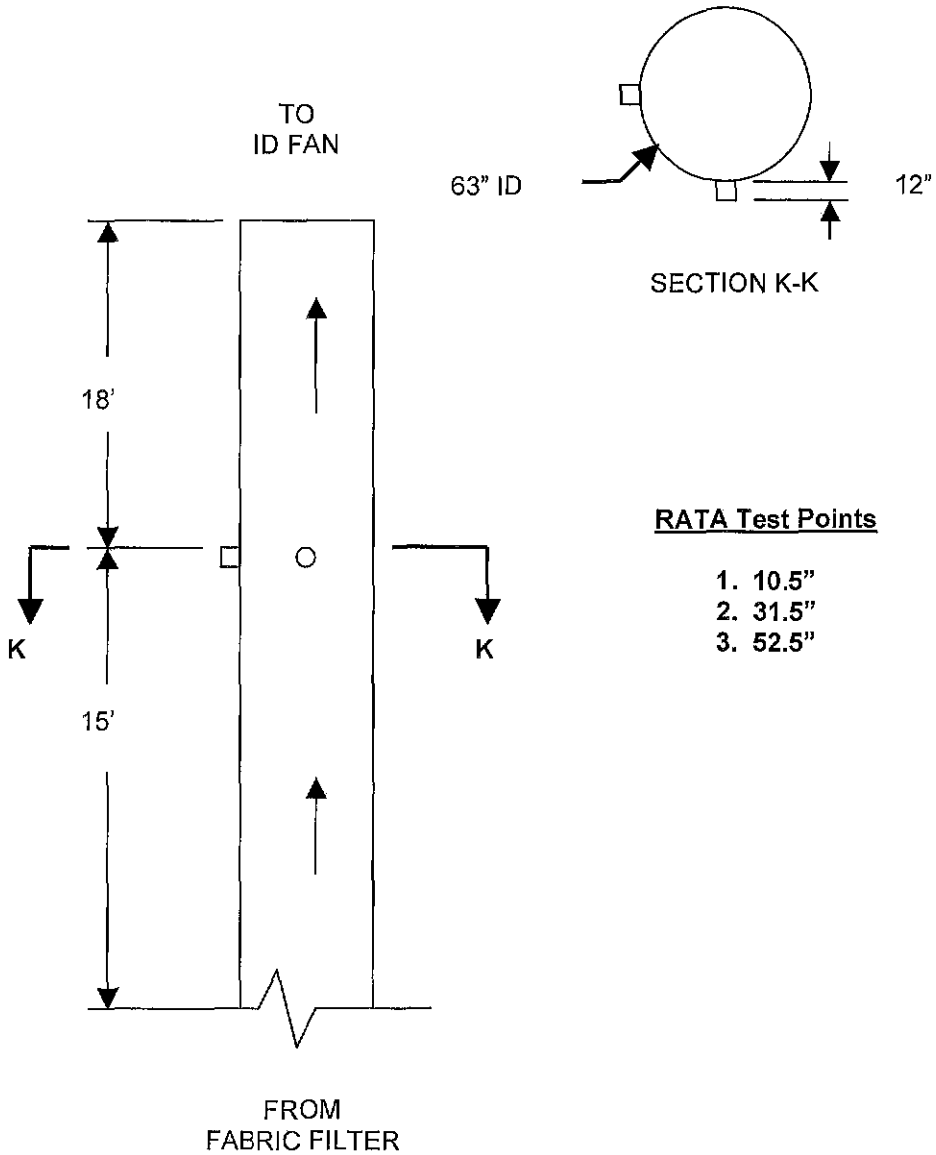

Figure 4-2. Fabric Filter Outlet Sampling Location
(Units 1, 2, & 3 are identical)

5 QA/QC RESULTS

5.1 QA/QC Policy Procedures

The calibration and quality assurance procedures of EPA Methods 3A, 6C, 7E, and 10 were followed throughout the test program and are summarized in Table 5-1. The results of sampling system bias and calibration drift tests for each test run are calculated and presented in Appendix B. The cylinder gas manufacturer's analyses of the O_2, SO_2, NO_x, and CO calibration gases were conducted according to EPA Protocol 1 requirements. The certificates of analysis are included in the test report. A summary of the calibration gases used during the test program is presented in Table 5-2.

Table 5-1
Summary of QA/QC Procedures

Test Method	QA/QC Procedure	QA/QC Objective	QA/QC Results	Status of QA/QC
EPA M3A, 6C, 7E and 10	Initial Calibration Error Test	< ±2%	< ±2%	Acceptable
	System Bias Test	< ±5%	< ±5%	Acceptable
	Drift Test	< ±3%	< ±3%	Acceptable
Pre-test	NOx Converter Checks	>90% Conversion Eff	92.7 %	Acceptable
Post-test	NOx Converter Checks	>90% Conversion Eff	94.3 %	Acceptable

Table 5-2
Reference Method Calibration Gas Values

Parameter	Span Level	Calibration Gas Value	Calibration Gas Serial Number
Oxygen	Mid	10.07 %	CC421867
	Mid	9.982 %	CC366298
	High	21.91 %	CC175833
Carbon Dioxide	Mid	9.094 %	CC421867
	Mid	8.945 %	CC366298
	High	18.04 %	CC175833
Sulfur Dioxide Outlet	Mid	47.16 ppm	CC326338
	High	91.83 ppm	FF4708
Sulfur Dioxide Inlet	Mid	244.7 ppm	CC33466
	High	491.6 ppm	CC220121
Nitrogen Dioxide	Converter Gas	50.60 ppm	CC323813
Nitrogen Oxides	Mid	234.7 ppm	SG9152406BAL
	High	484.8 ppm	CC120144
Carbon Monoxide	Mid	45.07 ppm	CC177291
	High	91.38 ppm	FF35824

APPENDIX A

Relative Accuracy Results

Relative Accuracy - 40CFR60, Appendix B, Performance Specification 3

Oxygen - Inlet

Client:	Covanta Energy Group, Inc.	Project #:	13022
Facility:	Huntington Resource Recovery Facility	Operator:	PJJ
Test Location:	Unit 1 SDA Inlet		

Analyzer:	Servomex 1440	valid = valid result used in RATA
Serial Number:	3335	void = valid result not used in RATA
App. Standard:	NA	invalid = invalid result NOT TO BE used in RATA
Parameter Units:	percent, %	

Test Run #	Test Date	Test Start Time	Test Stop Time	Reference Method Result	Facility CEM Result	Test Status	Difference (Ref-Fac)	Difference Squared
1	08/27/13	904	928	10.234	10.0	void		
2	08/27/13	946	1010	10.487	10.3	void		
3	08/27/13	1026	1050	9.732	9.6	valid	0.132	0.017
4	08/27/13	1104	1128	10.573	10.4	valid	0.173	0.030
5	08/27/13	1143	1207	9.559	9.5	valid	0.059	0.003
6	08/27/13	1221	1245	9.277	9.1	valid	0.177	0.031
7	08/27/13	1302	1326	10.072	10.0	valid	0.072	0.005
8	08/27/13	1348	1412	9.776	9.7	valid	0.076	0.006
9	08/27/13	1427	1451	9.611	9.5	valid	0.111	0.012
10	08/27/13	1518	1542	9.950	9.8	valid	0.150	0.022
11	08/27/13	1557	1621	9.803	9.8	valid	0.003	0.000
12								
13								
14								
15								
16								
			Averages:	9.817	9.711		0.106	

Standard Deviation	0.0581
Number of Tests	9
t-value	2.306
Confidence Coefficient	0.0447

Absolute Difference = 0.1

Relative Accuracy - 40CFR60, Appendix B, Performance Specification 3

Carbon Dioxide - Inlet

Client:	Covanta Energy Group, Inc.	Project #:	13022
Facility:	Huntington Resource Recovery Facility	Operator:	PJJ
Test Location:	Unit 1 SDA Inlet		

Analyzer:	Siemens Ultramat 21P	valid = valid result used in RATA
Serial Number:	A08-362	void = valid result not used in RATA
App. Standard:	NA	invalid = invalid result NOT TO BE used in RATA
Parameter Units:	percent, %	

Test Run #	Test Date	Test Start Time	Test Stop Time	Reference Method Result	Facility CEM Result	Test Status	Difference (Ref-Fac)	Difference Squared
1	08/27/13	904	928	9.266	9.0	valid	0.266	0.071
2	08/27/13	946	1010	8.843	8.5	valid	0.343	0.118
3	08/27/13	1026	1050	9.709	9.4	valid	0.309	0.095
4	08/27/13	1104	1128	9.009	8.7	valid	0.309	0.095
5	08/27/13	1143	1207	9.906	9.3	valid	0.606	0.367
6	08/27/13	1221	1245	10.166	9.7	valid	0.466	0.217
7	08/27/13	1302	1326	9.494	9.0	valid	0.494	0.244
8	08/27/13	1348	1412	9.807	9.2	void		
9	08/27/13	1427	1451	9.841	9.3	valid	0.541	0.293
10	08/27/13	1518	1542	9.673	9.1	valid	0.573	0.328
11	08/27/13	1557	1621	9.738	8.9	void		
12								
13								
14								
15								
16								
			Averages:	9.545	9.111		0.434	

Standard Deviation	0.1288
Number of Tests	9
t-value	2.306
Confidence Coefficient	0.0990

Absolute Difference = 0.4

Relative Accuracy - 40CFR60, Appendix B, Performance Specification 2

Sulfur Dioxide - Inlet

Client:	Covanta Energy Group, Inc.	Project #:	13022
Facility:	Huntington Resource Recovery Facility	Operator:	PJJ
Test Location:	Unit 1 SDA Inlet		

Analyzer:	Western Research 921	valid = valid result used in RATA
Serial Number:	AX-921-9646-2	void = valid result not used in RATA
App. Standard:	NA	invalid = invalid result NOT TO BE used in RATA
Parameter Units:	ppm@7%O2	

Test Run #	Test Date	Test Start Time	Test Stop Time	Reference Method Result	Facility CEM Result	Test Status	Difference (Ref-Fac)	Difference Squared
1	08/27/13	904	928	103.618	97	void		
2	08/27/13	946	1010	127.427	124	valid	3.427	11.742
3	08/27/13	1026	1050	64.285	60	valid	4.285	18.361
4	08/27/13	1104	1128	70.301	66	valid	4.301	18.497
5	08/27/13	1143	1207	53.646	49	valid	4.646	21.588
6	08/27/13	1221	1245	56.255	51	valid	5.255	27.619
7	08/27/13	1302	1326	58.280	53	valid	5.280	27.882
8	08/27/13	1348	1412	54.555	50	valid	4.555	20.751
9	08/27/13	1427	1451	72.708	67	valid	5.708	32.576
10	08/27/13	1518	1542	84.771	79	valid	5.771	33.304
11	08/27/13	1557	1621	52.859	46	void		
12								
13								
14								
15								
16								
			Averages:	71.359	66.556		4.803	

Standard Deviation	0.7655
Number of Tests	9
t-value	2.306
Confidence Coefficient	0.5884

Relative Accuracy % of Reference Method: 7.6

CONCENTRATION AND EMISSION RATE DATA SUMMARY

Client Name	Covanta Energy Group, Inc.	**Operator**	PJJ
Plant Name	Huntington Resource Recovery Facility	**Project #**	13022
Sampling Location	Unit 1 SDA Inlet		

Run Number		1	2	3	4
Run Date		08/27/13	08/27/13	08/27/13	08/27/13
Run Start Time	hh:mm	904	946	1026	1104
Run Stop Time	hh:mm	928	1010	1050	1128
Oxygen Percentage	% O_2	10.234	10.487	9.732	10.573
Carbon Dioxide Percentage	% CO_2	9.266	8.843	9.709	9.009

Sulfur Dioxide					
Formula Weight	Fwt	64.06	64.06	64.06	64.06
Concentration, ppm (dry)	ppmvd	79.51	95.46	51.65	52.23
Concentration, ppm@7%O2	ppm@7%O2	103.618	127.427	64.285	70.301

CONCENTRATION AND EMISSION RATE DATA SUMMARY

Client Name	Covanta Energy Group, Inc.	**Operator**	PJJ
Plant Name	Huntington Resource Recovery Facility	**Project #**	13022
Sampling Location	Unit 1 SDA Inlet		

Run Number		5	6	7	8
Run Date		08/27/13	08/27/13	08/27/13	08/27/13
Run Start Time	hh:mm	1143	1221	1302	1348
Run Stop Time	hh:mm	1207	1245	1326	1412
Oxygen Percentage	% O_2	9.559	9.277	10.072	9.776
Carbon Dioxide Percentage	% CO_2	9.906	10.166	9.494	9.807

Sulfur Dioxide					
Formula Weight	Fwt	64.06	64.06	64.06	64.06
Concentration, ppm (dry)	ppmvd	43.77	47.04	45.40	43.66
Concentration, ppm@7%O2	ppm@7%O2	53.646	56.255	58.280	54.555

CONCENTRATION AND EMISSION RATE DATA SUMMARY

Client Name	Covanta Energy Group, Inc.	**Operator**	PJJ
Plant Name	Huntington Resource Recovery Facility	**Project #**	13022
Sampling Location	Unit 1 SDA Inlet		

Run Number		9	10	11	
Run Date		08/27/13	08/27/13	08/27/13	
Run Start Time	hh:mm	1427	1518	1557	
Run Stop Time	hh:mm	1451	1542	1621	
Oxygen Percentage	% O_2	9.611	9.950	9.803	
Carbon Dioxide Percentage	% CO_2	9.841	9.673	9.738	

Sulfur Dioxide					
Formula Weight	Fwt	64.06	64.06	64.06	
Concentration, ppm (dry)	ppmvd	59.05	66.78	42.20	
Concentration, ppm@7%O2	ppm@7%O2	72.708	84.771	52.859	

Relative Accuracy - 40CFR60, Appendix B, Performance Specification 3

Oxygen - Outlet

Client:	Covanta Energy Group, Inc.	Project #:	13022
Facility:	Huntington Resource Recovery Facility	Operator:	PJJ
Test Location:	Unit 1 FF Outlet		

Analyzer:	CAI 650	valid = valid result used in RATA
Serial Number:	WO4036 O2	void = valid result not used in RATA
App. Standard:	NA	invalid = invalid result NOT TO BE used in RATA
Parameter Units:	percent, %	

Test Run #	Test Date	Test Start Time	Test Stop Time	Reference Method Result	Facility CEM Result	Test Status	Difference (Ref-Fac)	Difference Squared
1	08/27/13	904	928	11.454	11.1	valid	0.354	0.125
2	08/27/13	946	1010	11.839	11.3	valid	0.539	0.291
3	08/27/13	1026	1050	11.331	10.8	valid	0.531	0.282
4	08/27/13	1104	1128	12.372	11.8	void		
5	08/27/13	1143	1207	10.886	10.7	valid	0.186	0.035
6	08/27/13	1221	1245	11.803	10.3	void		
7	08/27/13	1302	1326	11.671	11.1	valid	0.571	0.326
8	08/27/13	1348	1412	10.944	10.7	valid	0.244	0.060
9	08/27/13	1427	1451	10.958	10.6	valid	0.358	0.128
10	08/27/13	1518	1542	11.148	10.9	valid	0.248	0.062
11	08/27/13	1557	1621	11.019	10.8	valid	0.219	0.048
12								
13								
14								
15								
16								
			Averages:	11.250	10.889		0.361	

Standard Deviation	0.1508
Number of Tests	9
t-value	2.306
Confidence Coefficient	0.1159
Absolute Difference =	0.4

Relative Accuracy - 40CFR60, Appendix B, Performance Specification 3

Carbon Dioxide - Outlet

Client:	Covanta Energy Group, Inc.	Project #:	13022
Facility:	Huntington Resource Recovery Facility	Operator:	PJJ
Test Location:	Unit 1 FF Outlet		

Analyzer:	Siemens Ultramat 21P	valid = valid result used in RATA
Serial Number:	A08-361	void = valid result not used in RATA
App. Standard:	NA	invalid = invalid result NOT TO BE used in RATA
Parameter Units:	percent, %	

Test Run #	Test Date	Test Start Time	Test Stop Time	Reference Method Result	Facility CEM Result	Test Status	Difference (Ref-Fac)	Difference Squared
1	08/27/13	904	928	8.656	8.4	valid	0.256	0.066
2	08/27/13	946	1010	8.429	8.0	void		
3	08/27/13	1026	1050	8.704	8.7	valid	0.004	0.000
4	08/27/13	1104	1128	8.217	7.8	void		
5	08/27/13	1143	1207	8.901	8.7	valid	0.201	0.040
6	08/27/13	1221	1245	8.532	9.0	valid	-0.468	0.219
7	08/27/13	1302	1326	8.619	8.5	valid	0.119	0.014
8	08/27/13	1348	1412	8.926	8.7	valid	0.226	0.051
9	08/27/13	1427	1451	8.875	8.8	valid	0.075	0.006
10	08/27/13	1518	1542	8.904	8.6	valid	0.304	0.092
11	08/27/13	1557	1621	8.857	8.6	valid	0.257	0.066
12								
13								
14								
15								
16								
			Averages:	8.775	8.667		0.108	

Standard Deviation	0.2369
Number of Tests	9
t-value	2.306
Confidence Coefficient	0.1821

Absolute Difference = 0.1

Relative Accuracy - 40CFR60, Appendix B, Performance Specification 2

Sulfur Dioxide - Outlet

Client:	Covanta Energy Group, Inc.	Project #:	13022
Facility:	Huntington Resource Recovery Facility	Operator:	PJJ
Test Location:	Unit 1 FF Outlet		

Analyzer:	Western Research 921	valid = valid result used in RATA
Serial Number:	AX-921-9646-1	void = valid result not used in RATA
App. Standard:	29	invalid = invalid result NOT TO BE used in RATA
Parameter Units:	ppm@7%O2	

Test Run #	Test Date	Test Start Time	Test Stop Time	Reference Method Result	Facility CEM Result	Test Status	Difference (Ref-Fac)	Difference Squared
1	08/27/13	904	928	0.547	0	void		
2	08/27/13	946	1010	5.288	2	void		
3	08/27/13	1026	1050	0.333	0	valid	0.333	0.111
4	08/27/13	1104	1128	0.350	0	valid	0.350	0.123
5	08/27/13	1143	1207	0.237	0	valid	0.237	0.056
6	08/27/13	1221	1245	0.396	0	valid	0.396	0.157
7	08/27/13	1302	1326	0.401	0	valid	0.401	0.161
8	08/27/13	1348	1412	0.282	0	valid	0.282	0.080
9	08/27/13	1427	1451	0.380	0	valid	0.380	0.145
10	08/27/13	1518	1542	0.000	0	valid	0.000	0.000
11	08/27/13	1557	1621	0.442	0	valid	0.442	0.195
12								
13								
14								
15								
16								
			Averages:	0.313	0.000		0.313	

Standard Deviation	0.1333
Number of Tests	9
t-value	2.306
Confidence Coefficient	0.1024

Relative Accuracy Percent of Standard: 1.4

Relative Accuracy - 40CFR60, Appendix B, Performance Specification 2

Nitrogen Oxides - Outlet

Client:	Covanta Energy Group, Inc.	Project #:	13022
Facility:	Huntington Resource Recovery Facility	Operator:	PJJ
Test Location:	Unit 1 FF Outlet		

Analyzer:	CAI 650	valid = valid result used in RATA
Serial Number:	WO4036 NOx	void = valid result not used in RATA
App. Standard:	185	invalid = invalid result NOT TO BE used in RATA
Parameter Units:	ppm@7%O2	

Test Run #	Test Date	Test Start Time	Test Stop Time	Reference Method Result	Facility CEM Result	Test Status	Difference (Ref-Fac)	Difference Squared
1	08/27/13	904	928	118.605	117	valid	1.605	2.575
2	08/27/13	946	1010	110.313	112	valid	-1.687	2.845
3	08/27/13	1026	1050	114.625	114	valid	0.625	0.391
4	08/27/13	1104	1128	109.009	108	valid	1.009	1.019
5	08/27/13	1143	1207	114.265	111	valid	3.265	10.659
6	08/27/13	1221	1245	117.761	116	valid	1.761	3.102
7	08/27/13	1302	1326	116.212	114	valid	2.212	4.895
8	08/27/13	1348	1412	120.459	117	void		
9	08/27/13	1427	1451	118.825	116	valid	2.825	7.982
10	08/27/13	1518	1542	119.173	117	valid	2.173	4.724
11	08/27/13	1557	1621	119.320	116	void		
12								
13								
14								
15								
16								
			Averages:	115.421	113.889		1.532	

Standard Deviation	1.4604
Number of Tests	9
t-value	2.306
Confidence Coefficient	1.1226

Relative Accuracy % of Reference Method: 2.3

Relative Accuracy - 40CFR60, Appendix B, Performance Specification 6

Nitrogen Oxides - Outlet

Client:	Covanta Energy Group, Inc.	Project #:	13022
Facility:	Huntington Resource Recovery Facility	Operator:	PJJ
Test Location:	Unit 1 FF Outlet		

Analyzer:	CAI 650	valid = valid result used in RATA
Serial Number:	WO4036 NOx	void = valid result not used in RATA
App. Standard:	NA	invalid = invalid result NOT TO BE used in RATA
Parameter Units:	lb/hr	

Test Run #	Test Date	Test Start Time	Test Stop Time	Reference Method Result	Facility CEM Result	Test Status	Difference (Ref-Fac)	Difference Squared
1	08/27/13	904	928	30.01	28.62	valid	1.390	1.932
2	08/27/13	946	1010	26.77	29.13	valid	-2.355	5.548
3	08/27/13	1026	1050	30.02	28.48	valid	1.536	2.359
4	08/27/13	1104	1128	25.44	26.45	valid	-1.010	1.021
5	08/27/13	1143	1207	31.31	28.79	valid	2.523	6.365
6	08/27/13	1221	1245	29.34	29.53	valid	-0.194	0.038
7	08/27/13	1302	1326	29.37	28.37	valid	1.001	1.001
8	08/27/13	1348	1412	32.77	30.08	void		
9	08/27/13	1427	1451	32.28	29.42	void		
10	08/27/13	1518	1542	29.69	28.23	valid	1.456	2.121
11	08/27/13	1557	1621	30.12	28.62	valid	1.496	2.238
12								
13								
14								
15								
16								
			Averages:	29.118	28.469		0.649	

Standard Deviation	1.5342
Number of Tests	9
t-value	2.306
Confidence Coefficient	1.1793

Relative Accuracy % of Reference Method: 6.3

Relative Accuracy - 40CFR60, Appendix B, Performance Specification 4A

Carbon Monoxide - Low - Outlet

Client:	Covanta Energy Group, Inc.	Project #:	13022
Facility:	Huntington Resource Recovery Facility	Operator:	PJJ
Test Location:	Unit 1 FF Outlet		

Analyzer:	TECO 48i	valid = valid result used in RATA
Serial Number:	0636119863L	void = valid result not used in RATA
App. Standard:	100	invalid = invalid result NOT TO BE used in RATA
Parameter Units:	ppm@7%O2	

Test Run #	Test Date	Test Start Time	Test Stop Time	Reference Method Result	Facility CEM Result	Test Status	Difference (Ref-Fac)	Difference Squared
1	08/27/13	904	928	30.591	28	void		
2	08/27/13	946	1010	13.339	13	valid	0.339	0.115
3	08/27/13	1026	1050	18.695	17	valid	1.695	2.873
4	08/27/13	1104	1128	22.242	21	valid	1.242	1.542
5	08/27/13	1143	1207	14.304	13	valid	1.304	1.700
6	08/27/13	1221	1245	19.139	17	valid	2.139	4.577
7	08/27/13	1302	1326	21.306	19	void		
8	08/27/13	1348	1412	31.268	29	valid	2.268	5.144
9	08/27/13	1427	1451	15.829	14	valid	1.829	3.347
10	08/27/13	1518	1542	26.177	24	valid	2.177	4.737
11	08/27/13	1557	1621	23.995	22	valid	1.995	3.979
12								
13								
14								
15								
16								
			Averages:	20.554	18.889		1.665	

Standard Deviation	0.6181
Number of Tests	9
t-value	2.306
Confidence Coefficient	0.4751

Relative Accuracy Percent of Standard: 2.1

Relative Accuracy - 40CFR60, Appendix B, Performance Specification 4A

Carbon Monoxide - High - Outlet

Client:	Covanta Energy Group, Inc.	Project #:	13022
Facility:	Huntington Resource Recovery Facility	Operator:	PJJ
Test Location:	Unit 1 FF Outlet		

Analyzer:	TECO 48i	valid = valid result used in RATA
Serial Number:	0636119863H	void = valid result not used in RATA
App. Standard:	100	invalid = invalid result NOT TO BE used in RATA
Parameter Units:	ppm@7%O2	

Test Run #	Test Date	Test Start Time	Test Stop Time	Reference Method Result	Facility CEM Result	Test Status	Difference (Ref-Fac)	Difference Squared
1	08/27/13	904	928	30.591	28	void		
2	08/27/13	946	1010	13.339	13	valid	0.339	0.115
3	08/27/13	1026	1050	18.695	17	valid	1.695	2.873
4	08/27/13	1104	1128	22.242	21	valid	1.242	1.542
5	08/27/13	1143	1207	14.304	13	valid	1.304	1.700
6	08/27/13	1221	1245	19.139	17	valid	2.139	4.577
7	08/27/13	1302	1326	21.306	19	void		
8	08/27/13	1348	1412	31.268	29	valid	2.268	5.144
9	08/27/13	1427	1451	15.829	14	valid	1.829	3.347
10	08/27/13	1518	1542	26.177	24	valid	2.177	4.737
11	08/27/13	1557	1621	23.995	22	valid	1.995	3.979
12								
13								
14								
15								
16								
			Averages:	20.554	18.889		1.665	

Standard Deviation	0.6181
Number of Tests	9
t-value	2.306
Confidence Coefficient	0.4751

Relative Accuracy Percent of Standard: 2.1

CONCENTRATION AND EMISSION RATE DATA SUMMARY

Client Name	Covanta Energy Group, Inc.	**Operator**	PJJ
Plant Name	Huntington Resource Recovery Facility	**Project #**	13022
Sampling Location	Unit 1 FF Outlet		

Run Number		1	2	3	4
Run Date		08/27/13	08/27/13	08/27/13	08/27/13
Run Start Time	hh:mm	904	946	1026	1104
Run Stop Time	hh:mm	928	1010	1050	1128
Moisture Content	% H_2O	17.8	17.8	19.0	19.0
Dry Mole Fraction	Mfd	0.822	0.822	0.810	0.810
Oxygen Percentage	% O_2	11.454	11.839	11.331	12.372
Carbon Dioxide Percentage	% CO_2	8.656	8.429	8.704	8.217
Dry Standard Stack Flow Rate	DSCFM	51,967	51,967	53,090	53,090
Air Flow and Moisture Taken From Test Run =>		1-O-M316-1	1-O-M316-1	1-O-M8-1	1-O-M8-1

Sulfur Dioxide					
Formula Weight	Fwt	64.06	64.06	64.06	64.06
Concentration, ppm (dry)	ppmvd	0.372	3.447	0.229	0.215
Concentration, ppm@7%O2	ppm@7%O2	0.547	5.288	0.333	0.350

Nitrogen Oxides as NO2					
Formula Weight	Fwt	46.01	46.01	46.01	46.01
Concentration, ppm (dry)	ppmvd	80.60	71.91	78.91	66.88
Concentration, ppm@7%O2	ppm@7%O2	118.605	110.313	114.625	109.009
Emission Rate, lb/hr	lb/hr	30.01	26.77	30.02	25.44

Carbon Monoxide					
Formula Weight	Fwt	28.01	28.01	28.01	28.01
Concentration, ppm (dry)	ppmvd	20.780	8.695	12.870	13.646
Concentration, ppm@7%O2	ppm@7%O2	30.591	13.339	18.695	22.242

Total Hydrocarbons (as Ethane)					
Formula Weight of Ethane	Fwt	30.06	30.06	30.06	30.06
Concentration, ppm (wet)	ppmvw	0.201	0.193	0.138	0.212
Concentration, ppm (dry)	ppmvd	0.245	0.235	0.170	0.262
Concentration, ppm@7%O2	ppm@7%O2	0.360	0.360	0.247	0.427
Concentration, ppm@12%CO2	ppm@12%CO2	0.339	0.334	0.235	0.382
Emission Rate, lb/hr	lb/hr	0.059	0.057	0.042	0.065

CONCENTRATION AND EMISSION RATE DATA SUMMARY

Client Name	Covanta Energy Group, Inc.	**Operator**	PJJ
Plant Name	Huntington Resource Recovery Facility	**Project #**	13022
Sampling Location	Unit 1 FF Outlet		

Run Number		5	6	7	8
Run Date		08/27/13	08/27/13	08/27/13	08/27/13
Run Start Time	hh:mm	1143	1221	1302	1348
Run Stop Time	hh:mm	1207	1245	1326	1412
Moisture Content	% H_20	19.0	19.8	19.8	19.1
Dry Mole Fraction	Mfd	0.810	0.802	0.802	0.809
Oxygen Percentage	% O_2	10.886	11.803	11.671	10.944
Carbon Dioxide Percentage	% CO_2	8.901	8.532	8.619	8.926
Dry Standard Stack Flow Rate	DSCFM	53,090	53,127	53,127	53,007
Air Flow and Moisture Taken From Test Run =>		1-O-M8-1	1-O-316-2	1-O-316-2	1-O-M8-2

Sulfur Dioxide					
Formula Weight	Fwt	64.06	64.06	64.06	64.06
Concentration, ppm (dry)	ppmvd	0.171	0.259	0.266	0.202
Concentration, ppm@7%O2	ppm@7%O2	0.237	0.396	0.401	0.282

Nitrogen Oxides as NO2					
Formula Weight	Fwt	46.01	46.01	46.01	46.01
Concentration, ppm (dry)	ppmvd	82.32	77.07	77.16	86.28
Concentration, ppm@7%O2	ppm@7%O2	114.265	117.761	116.212	120.459
Emission Rate, lb/hr	lb/hr	31.31	29.34	29.37	32.77

Carbon Monoxide					
Formula Weight	Fwt	28.01	28.01	28.01	28.01
Concentration, ppm (dry)	ppmvd	10.305	12.526	14.146	22.396
Concentration, ppm@7%O2	ppm@7%O2	14.304	19.139	21.306	31.268

Total Hydrocarbons (as Ethane)					
Formula Weight of Ethane	Fwt	30.06	30.06	30.06	30.06
Concentration, ppm (wet)	ppmvw	0.503	0.207	0.214	0.211
Concentration, ppm (dry)	ppmvd	0.621	0.258	0.267	0.261
Concentration, ppm@7%O2	ppm@7%O2	0.862	0.394	0.402	0.364
Concentration, ppm@12%CO2	ppm@12%CO2	0.837	0.363	0.372	0.351
Emission Rate, lb/hr	lb/hr	0.154	0.064	0.066	0.065

CONCENTRATION AND EMISSION RATE DATA SUMMARY

Client Name	Covanta Energy Group, Inc.	**Operator**	PJJ
Plant Name	Huntington Resource Recovery Facility	**Project #**	13022
Sampling Location	Unit 1 FF Outlet		

Run Number		9	10	11	
Run Date		08/27/13	08/27/13	08/27/13	
Run Start Time	hh:mm	1427	1518	1557	
Run Stop Time	hh:mm	1451	1542	1621	
Moisture Content	% H_20	19.1	20.5	20.5	
Dry Mole Fraction	Mfd	0.809	0.795	0.795	
Oxygen Percentage	% O_2	10.958	11.148	11.019	
Carbon Dioxide Percentage	% CO_2	8.875	8.904	8.857	
Dry Standard Stack Flow Rate	DSCFM	53,007	49,556	49,556	
Air Flow and Moisture Taken From Test Run =>		1-O-M8-2	1-O-M316-3	1-O-M316-3	

Sulfur Dioxide					
Formula Weight	Fwt	64.06	64.06	64.06	
Concentration, ppm (dry)	ppmvd	0.272	-0.015	0.314	
Concentration, ppm@7%O2	ppm@7%O2	0.380	-0.021	0.442	

Nitrogen Oxides as NO2					
Formula Weight	Fwt	46.01	46.01	46.01	
Concentration, ppm (dry)	ppmvd	84.99	83.61	84.82	
Concentration, ppm@7%O2	ppm@7%O2	118.825	119.173	119.320	
Emission Rate, lb/hr	lb/hr	32.28	29.69	30.12	

Carbon Monoxide					
Formula Weight	Fwt	28.01	28.01	28.01	
Concentration, ppm (dry)	ppmvd	11.322	18.365	17.057	
Concentration, ppm@7%O2	ppm@7%O2	15.829	26.177	23.995	

Total Hydrocarbons (as Ethane)					
Formula Weight of Ethane	Fwt	30.06	30.06	30.06	
Concentration, ppm (wet)	ppmvw	0.090	2.363	1.190	
Concentration, ppm (dry)	ppmvd	0.111	2.972	1.497	
Concentration, ppm@7%O2	ppm@7%O2	0.156	4.237	2.106	
Concentration, ppm@12%CO2	ppm@12%CO2	0.150	4.006	2.028	
Emission Rate, lb/hr	lb/hr	0.028	0.689	0.347	

Relative Accuracy - 40CFR60, Appendix B, Performance Specification 3

Oxygen - Inlet

Client:	Covanta Energy Group, Inc.	Project #:	13022
Facility:	Huntington Resource Recovery Facility	Operator:	PJJ
Test Location:	Unit 2 SDA Inlet		

Analyzer:	Servomex 1440	valid = valid result used in RATA
Serial Number:	3337	void = valid result not used in RATA
App. Standard:	NA	invalid = invalid result NOT TO BE used in RATA
Parameter Units:	percent, %	

Test Run #	Test Date	Test Start Time	Test Stop Time	Reference Method Result	Facility CEM Result	Test Status	Difference (Ref-Fac)	Difference Squared
1	08/28/13	947	1011	9.631	9.4	valid	0.231	0.053
2	08/28/13	1025	1049	9.621	9.4	valid	0.221	0.049
3	08/28/13	1110	1134	9.610	9.5	valid	0.110	0.012
4	08/28/13	1150	1214	9.624	9.4	valid	0.224	0.050
5	08/28/13	1233	1257	9.947	9.7	valid	0.247	0.061
6	08/28/13	1312	1336	9.904	9.8	valid	0.104	0.011
7	08/28/13	1406	1430	10.332	9.9	void		
8	08/28/13	1446	1510	9.504	9.3	valid	0.204	0.042
9	08/28/13	1527	1551	9.802	9.6	valid	0.202	0.041
10	08/28/13	1608	1632	9.525	9.4	valid	0.125	0.016
11								
12								
13								
14								
15								
16								
			Averages:	9.685	9.500		0.185	

Standard Deviation	0.0561
Number of Tests	9
t-value	2.306
Confidence Coefficient	0.0432
Absolute Difference =	0.2

Relative Accuracy - 40CFR60, Appendix B, Performance Specification 3

Carbon Dioxide - Inlet

Client:	Covanta Energy Group, Inc.	Project #:	13022
Facility:	Huntington Resource Recovery Facility	Operator:	PJJ
Test Location:	Unit 2 SDA Inlet		

Analyzer:	Siemens Ultramat 21P	valid = valid result used in RATA
Serial Number:	A08-363	void = valid result not used in RATA
App. Standard:	NA	invalid = invalid result NOT TO BE used in RATA
Parameter Units:	percent, %	

Test Run #	Test Date	Test Start Time	Test Stop Time	Reference Method Result	Facility CEM Result	Test Status	Difference (Ref-Fac)	Difference Squared
1	08/28/13	947	1011	9.880	9.9	valid	-0.020	0.000
2	08/28/13	1025	1049	9.829	9.8	valid	0.029	0.001
3	08/28/13	1110	1134	9.906	9.6	void		
4	08/28/13	1150	1214	9.859	9.7	valid	0.159	0.025
5	08/28/13	1233	1257	9.670	9.6	valid	0.070	0.005
6	08/28/13	1312	1336	9.632	9.4	valid	0.232	0.054
7	08/28/13	1406	1430	9.220	9.2	valid	0.020	0.000
8	08/28/13	1446	1510	10.174	10.1	valid	0.074	0.005
9	08/28/13	1527	1551	9.850	9.8	valid	0.050	0.002
10	08/28/13	1608	1632	10.065	9.9	valid	0.165	0.027
11								
12								
13								
14								
15								
16								
			Averages:	9.798	9.711		0.087	

Standard Deviation	0.0817
Number of Tests	9
t-value	2.306
Confidence Coefficient	0.0628

Absolute Difference = 0.1

Relative Accuracy - 40CFR60, Appendix B, Performance Specification 2

Sulfur Dioxide - Inlet

Client:	Covanta Energy Group, Inc.	Project #:	13022
Facility:	Huntington Resource Recovery Facility	Operator:	PJJ
Test Location:	Unit 2 SDA Inlet		

Analyzer:	Western Research 921	valid = valid result used in RATA
Serial Number:	AX-921-9646-4	void = valid result not used in RATA
App. Standard:	NA	invalid = invalid result NOT TO BE used in RATA
Parameter Units:	ppm@7%O2	

Test Run #	Test Date	Test Start Time	Test Stop Time	Reference Method Result	Facility CEM Result	Test Status	Difference (Ref-Fac)	Difference Squared
1	08/28/13	947	1011	63.425	58	void		
2	08/28/13	1025	1049	55.753	52	valid	3.753	14.084
3	08/28/13	1110	1134	56.967	52	valid	4.967	24.667
4	08/28/13	1150	1214	51.342	50	valid	1.342	1.802
5	08/28/13	1233	1257	55.889	52	valid	3.889	15.127
6	08/28/13	1312	1336	102.720	100	valid	2.720	7.401
7	08/28/13	1406	1430	42.997	42	valid	0.997	0.994
8	08/28/13	1446	1510	37.775	34	valid	3.775	14.250
9	08/28/13	1527	1551	91.306	86	valid	5.306	28.150
10	08/28/13	1608	1632	82.655	82	valid	0.655	0.428
11								
12								
13								
14								
15								
16								
			Averages:	64.156	61.111		3.045	

Standard Deviation	1.7126
Number of Tests	9
t-value	2.306
Confidence Coefficient	1.3164

Relative Accuracy % of Reference Method: 6.8

CONCENTRATION AND EMISSION RATE DATA SUMMARY

Client Name	Covanta Energy Group, Inc.	**Operator**	PJJ
Plant Name	Huntington Resource Recovery Facility	**Project #**	13022
Sampling Location	Unit 2 SDA Inlet		

Run Number		1	2	3	4
Run Date		08/28/13	08/28/13	08/28/13	08/28/13
Run Start Time	hh:mm	947	1025	1110	1150
Run Stop Time	hh:mm	1011	1049	1134	1214
Oxygen Percentage	% O_2	9.631	9.621	9.610	9.624
Carbon Dioxide Percentage	% CO_2	9.880	9.829	9.906	9.859

Sulfur Dioxide					
Formula Weight	Fwt	64.06	64.06	64.06	64.06
Concentration, ppm (dry)	ppmvd	51.42	45.24	46.27	41.65
Concentration, ppm@7%O2	ppm@7%O2	63.425	55.753	56.967	51.342

CONCENTRATION AND EMISSION RATE DATA SUMMARY

Client Name	Covanta Energy Group, Inc.	**Operator**	PJJ
Plant Name	Huntington Resource Recovery Facility	**Project #**	13022
Sampling Location	Unit 2 SDA Inlet		

Run Number		5	6	7	8
Run Date		08/28/13	08/28/13	08/28/13	08/28/13
Run Start Time	hh:mm	1233	1312	1406	1446
Run Stop Time	hh:mm	1257	1336	1430	1510
Oxygen Percentage	% O_2	9.947	9.904	10.332	9.504
Carbon Dioxide Percentage	% CO_2	9.670	9.632	9.220	10.174

Sulfur Dioxide					
Formula Weight	Fwt	64.06	64.06	64.06	64.06
Concentration, ppm (dry)	ppmvd	44.04	81.26	32.69	30.97
Concentration, ppm@7%O2	ppm@7%O2	55.889	102.720	42.997	37.775

CONCENTRATION AND EMISSION RATE DATA SUMMARY

Client Name	Covanta Energy Group, Inc.	**Operator**	PJJ
Plant Name	Huntington Resource Recovery Facility	**Project #**	13022
Sampling Location	Unit 2 SDA Inlet		

Run Number		9	10		
Run Date		08/28/13	08/28/13		
Run Start Time	hh:mm	1527	1608		
Run Stop Time	hh:mm	1551	1632		
Oxygen Percentage	% O_2	9.802	9.525		
Carbon Dioxide Percentage	% CO_2	9.850	10.065		

Sulfur Dioxide					
Formula Weight	Fwt	64.06	64.06		
Concentration, ppm (dry)	ppmvd	72.90	67.64		
Concentration, ppm@7%O2	ppm@7%O2	91.306	82.655		

Relative Accuracy - 40CFR60, Appendix B, Performance Specification 3

Oxygen - Outlet

Client:	Covanta Energy Group, Inc.	Project #:	13022
Facility:	Huntington Resource Recovery Facility	Operator:	PJJ
Test Location:	Unit 2 FF Outlet		

Analyzer:	CAI 650	valid = valid result used in RATA
Serial Number:	WO4037 O2	void = valid result not used in RATA
App. Standard:	NA	invalid = invalid result NOT TO BE used in RATA
Parameter Units:	percent, %	

Test Run #	Test Date	Test Start Time	Test Stop Time	Reference Method Result	Facility CEM Result	Test Status	Difference (Ref-Fac)	Difference Squared
1	08/28/13	947	1011	9.947	9.7	valid	0.247	0.061
2	08/28/13	1025	1049	9.919	9.7	valid	0.219	0.048
3	08/28/13	1110	1134	9.888	9.7	valid	0.188	0.035
4	08/28/13	1150	1214	9.918	9.7	valid	0.218	0.048
5	08/28/13	1233	1257	10.199	10.1	valid	0.099	0.010
6	08/28/13	1312	1336	10.168	10.0	valid	0.168	0.028
7	08/28/13	1406	1430	10.607	10.3	void		
8	08/28/13	1446	1510	9.827	9.6	valid	0.227	0.052
9	08/28/13	1527	1551	10.104	9.9	valid	0.204	0.042
10	08/28/13	1608	1632	9.863	9.8	valid	0.063	0.004
11								
12								
13								
14								
15								
16								
			Averages:	9.981	9.800		0.181	

Standard Deviation	0.0619
Number of Tests	9
t-value	2.306
Confidence Coefficient	0.0476
Absolute Difference =	0.2

Relative Accuracy - 40CFR60, Appendix B, Performance Specification 3

Carbon Dioxide - Outlet

Client:	Covanta Energy Group, Inc.	Project #:	13022
Facility:	Huntington Resource Recovery Facility	Operator:	PJJ
Test Location:	Unit 2 FF Outlet		

Analyzer:	Siemens Ultramat 21P	valid = valid result used in RATA
Serial Number:	A08-369	void = valid result not used in RATA
App. Standard:	NA	invalid = invalid result NOT TO BE used in RATA
Parameter Units:	percent, %	

Test Run #	Test Date	Test Start Time	Test Stop Time	Reference Method Result	Facility CEM Result	Test Status	Difference (Ref-Fac)	Difference Squared
1	08/28/13	947	1011	9.574	9.6	valid	-0.026	0.001
2	08/28/13	1025	1049	9.432	9.4	valid	0.032	0.001
3	08/28/13	1110	1134	9.543	9.4	valid	0.143	0.020
4	08/28/13	1150	1214	9.500	9.4	valid	0.100	0.010
5	08/28/13	1233	1257	9.372	9.2	valid	0.172	0.030
6	08/28/13	1312	1336	9.366	9.1	valid	0.266	0.071
7	08/28/13	1406	1430	9.180	8.8	void		
8	08/28/13	1446	1510	9.645	9.7	valid	-0.055	0.003
9	08/28/13	1527	1551	9.382	9.4	valid	-0.018	0.000
10	08/28/13	1608	1632	9.560	9.4	valid	0.160	0.026
11								
12								
13								
14								
15								
16								
			Averages:	9.486	9.400		0.086	

Standard Deviation	0.1089
Number of Tests	9
t-value	2.306
Confidence Coefficient	0.0837

Absolute Difference = 0.1

Relative Accuracy - 40CFR60, Appendix B, Performance Specification 2

Sulfur Dioxide - Outlet

Client:	Covanta Energy Group, Inc.	Project #:	13022
Facility:	Huntington Resource Recovery Facility	Operator:	PJJ
Test Location:	Unit 2 FF Outlet		

Analyzer:	Western Research 921	valid = valid result used in RATA
Serial Number:	AX-921-9646-3	void = valid result not used in RATA
App. Standard:	29	invalid = invalid result NOT TO BE used in RATA
Parameter Units:	ppm@7%O2	

Test Run #	Test Date	Test Start Time	Test Stop Time	Reference Method Result	Facility CEM Result	Test Status	Difference (Ref-Fac)	Difference Squared
1	08/28/13	947	1011	0.462	0	valid	0.462	0.213
2	08/28/13	1025	1049	0.330	0	valid	0.330	0.109
3	08/28/13	1110	1134	0.149	0	valid	0.149	0.022
4	08/28/13	1150	1214	0.556	0	void		
5	08/28/13	1233	1257	0.303	0	valid	0.303	0.092
6	08/28/13	1312	1336	0.364	0	valid	0.364	0.132
7	08/28/13	1406	1430	0.001	0	valid	0.001	0.000
8	08/28/13	1446	1510	0.311	0	valid	0.311	0.097
9	08/28/13	1527	1551	0.391	0	valid	0.391	0.153
10	08/28/13	1608	1632	0.398	0	valid	0.398	0.158
11								
12								
13								
14								
15								
16								
			Averages:	0.301	0.000		0.301	

Standard Deviation	0.1420
Number of Tests	9
t-value	2.306
Confidence Coefficient	0.1092

Relative Accuracy Percent of Standard: 1.4

Relative Accuracy - 40CFR60, Appendix B, Performance Specification 2

Nitrogen Oxides - Outlet

Client:	Covanta Energy Group, Inc.	Project #:	13022
Facility:	Huntington Resource Recovery Facility	Operator:	PJJ
Test Location:	Unit 2 FF Outlet		

Analyzer:	CAI 650	valid = valid result used in RATA
Serial Number:	WO4037 NOx	void = valid result not used in RATA
App. Standard:	185	invalid = invalid result NOT TO BE used in RATA
Parameter Units:	ppm@7%O2	

Test Run #	Test Date	Test Start Time	Test Stop Time	Reference Method Result	Facility CEM Result	Test Status	Difference (Ref-Fac)	Difference Squared
1	08/28/13	947	1011	118.314	119	valid	-0.686	0.470
2	08/28/13	1025	1049	104.949	107	void		
3	08/28/13	1110	1134	116.166	116	valid	0.166	0.027
4	08/28/13	1150	1214	112.382	111	valid	1.382	1.910
5	08/28/13	1233	1257	112.618	112	valid	0.618	0.382
6	08/28/13	1312	1336	106.361	107	valid	-0.639	0.408
7	08/28/13	1406	1430	118.095	119	valid	-0.905	0.818
8	08/28/13	1446	1510	111.132	113	valid	-1.868	3.489
9	08/28/13	1527	1551	112.619	114	valid	-1.381	1.908
10	08/28/13	1608	1632	110.462	110	valid	0.462	0.213
11								
12								
13								
14								
15								
16								
			Averages:	113.128	113.444		-0.317	

Standard Deviation	1.0443
Number of Tests	9
t-value	2.306
Confidence Coefficient	0.8027

Relative Accuracy % of Reference Method: 1.0

Relative Accuracy - 40CFR60, Appendix B, Performance Specification 6

Nitrogen Oxides - Outlet

Client:	Covanta Energy Group, Inc.	Project #:	13022
Facility:	Huntington Resource Recovery Facility	Operator:	PJJ
Test Location:	Unit 2 FF Outlet		

Analyzer:	CAI 650	valid = valid result used in RATA
Serial Number:	WO4037 NOx	void = valid result not used in RATA
App. Standard:	NA	invalid = invalid result NOT TO BE used in RATA
Parameter Units:	lb/hr	

Test Run #	Test Date	Test Start Time	Test Stop Time	Reference Method Result	Facility CEM Result	Test Status	Difference (Ref-Fac)	Difference Squared
1	08/28/13	947	1011	34.75	29.89	void		
2	08/28/13	1025	1049	30.90	27.99	valid	2.913	8.488
3	08/28/13	1110	1134	32.58	30.28	valid	2.302	5.298
4	08/28/13	1150	1214	31.43	28.65	valid	2.785	7.755
5	08/28/13	1233	1257	32.59	27.85	valid	4.736	22.433
6	08/28/13	1312	1336	30.86	28.11	valid	2.755	7.590
7	08/28/13	1406	1430	30.21	31.03	valid	-0.822	0.676
8	08/28/13	1446	1510	30.58	29.02	valid	1.561	2.436
9	08/28/13	1527	1551	30.21	29.61	valid	0.605	0.366
10	08/28/13	1608	1632	31.19	28.09	valid	3.097	9.594
11								
12								
13								
14								
15								
16								
			Averages:	31.174	28.959		2.215	

Standard Deviation	1.6005
Number of Tests	9
t-value	2.306
Confidence Coefficient	1.2302

Relative Accuracy % of Reference Method: 11.1

Relative Accuracy - 40CFR60, Appendix B, Performance Specification 4A

Carbon Monoxide - Low - Outlet

Client:	Covanta Energy Group, Inc.	Project #:	13022
Facility:	Huntington Resource Recovery Facility	Operator:	PJJ
Test Location:	Unit 2 FF Outlet		

Analyzer:	TECO 48i	valid = valid result used in RATA
Serial Number:	0636119864L	void = valid result not used in RATA
App. Standard:	100	invalid = invalid result NOT TO BE used in RATA
Parameter Units:	ppm@7%O2	

Test Run #	Test Date	Test Start Time	Test Stop Time	Reference Method Result	Facility CEM Result	Test Status	Difference (Ref-Fac)	Difference Squared
1	08/28/13	947	1011	12.933	10	void		
2	08/28/13	1025	1049	8.306	7	valid	1.306	1.706
3	08/28/13	1110	1134	7.187	5	valid	2.187	4.784
4	08/28/13	1150	1214	8.761	7	valid	1.761	3.102
5	08/28/13	1233	1257	9.984	9	valid	0.984	0.968
6	08/28/13	1312	1336	13.742	13	valid	0.742	0.551
7	08/28/13	1406	1430	14.223	12	valid	2.223	4.941
8	08/28/13	1446	1510	10.621	9	valid	1.621	2.628
9	08/28/13	1527	1551	10.331	8	valid	2.331	5.434
10	08/28/13	1608	1632	15.132	14	valid	1.132	1.281
11								
12								
13								
14								
15								
16								
			Averages:	10.921	9.333		1.587	

Standard Deviation	0.5824
Number of Tests	9
t-value	2.306
Confidence Coefficient	0.4477

Relative Accuracy Percent of Standard: 2.0

Relative Accuracy - 40CFR60, Appendix B, Performance Specification 4A

Carbon Monoxide - High - Outlet

Client:	Covanta Energy Group, Inc.	Project #:	13022
Facility:	Huntington Resource Recovery Facility	Operator:	PJJ
Test Location:	Unit 2 FF Outlet		

Analyzer:	TECO 48i	valid = valid result used in RATA
Serial Number:	0636119864H	void = valid result not used in RATA
App. Standard:	100	invalid = invalid result NOT TO BE used in RATA
Parameter Units:	ppm@7%O2	

Test Run #	Test Date	Test Start Time	Test Stop Time	Reference Method Result	Facility CEM Result	Test Status	Difference (Ref-Fac)	Difference Squared
1	08/28/13	947	1011	12.933	10	void		
2	08/28/13	1025	1049	8.306	7	valid	1.306	1.706
3	08/28/13	1110	1134	7.187	5	valid	2.187	4.784
4	08/28/13	1150	1214	8.761	7	valid	1.761	3.102
5	08/28/13	1233	1257	9.984	9	valid	0.984	0.968
6	08/28/13	1312	1336	13.742	13	valid	0.742	0.551
7	08/28/13	1406	1430	14.223	12	valid	2.223	4.941
8	08/28/13	1446	1510	10.621	9	valid	1.621	2.628
9	08/28/13	1527	1551	10.331	8	valid	2.331	5.434
10	08/28/13	1608	1632	15.132	13	valid	2.132	4.544
11								
12								
13								
14								
15								
16								
			Averages:	10.921	9.222		1.699	

Standard Deviation	0.5800
Number of Tests	9
t-value	2.306
Confidence Coefficient	0.4458

Relative Accuracy Percent of Standard: 2.1

CONCENTRATION AND EMISSION RATE DATA SUMMARY

Client Name	Covanta Energy Group, Inc.	**Operator**	PJJ
Plant Name	Huntington Resource Recovery Facility	**Project #**	13022
Sampling Location	Unit 2 FF Outlet		

Run Number		1	2	3	4
Run Date		08/28/13	08/28/13	08/28/13	08/28/13
Run Start Time	hh:mm	947	1025	1110	1150
Run Stop Time	hh:mm	1011	1049	1134	1214
Moisture Content	% H_2O	18.8	18.8	18.6	18.6
Dry Mole Fraction	Mfd	0.812	0.812	0.814	0.814
Oxygen Percentage	% O_2	9.947	9.919	9.888	9.918
Carbon Dioxide Percentage	% CO_2	9.574	9.432	9.543	9.500
Dry Standard Stack Flow Rate	DSCFM	52,023	52,023	49,413	49,413
Air Flow and Moisture Taken From Test Run =>		2-O-M316-1	2-O-M316-1	2-O-M8-1	2-O-M8-1

Sulfur Dioxide					
Formula Weight	Fwt	64.06	64.06	64.06	64.06
Concentration, ppm (dry)	ppmvd	0.364	0.261	0.118	0.439
Concentration, ppm@7%O2	ppm@7%O2	0.462	0.330	0.149	0.556

Nitrogen Oxides as NO2					
Formula Weight	Fwt	46.01	46.01	46.01	46.01
Concentration, ppm (dry)	ppmvd	93.23	82.91	92.03	88.79
Concentration, ppm@7%O2	ppm@7%O2	118.314	104.949	116.166	112.382
Emission Rate, lb/hr	lb/hr	34.75	30.90	32.58	31.43

Carbon Monoxide					
Formula Weight	Fwt	28.01	28.01	28.01	28.01
Concentration, ppm (dry)	ppmvd	10.191	6.562	5.694	6.922
Concentration, ppm@7%O2	ppm@7%O2	12.933	8.306	7.187	8.761

Total Hydrocarbons (as Ethane)					
Formula Weight of Ethane	Fwt	30.06	30.06	30.06	30.06
Concentration, ppm (wet)	ppmvw	0.158	0.237	0.456	0.114
Concentration, ppm (dry)	ppmvd	0.195	0.292	0.560	0.140
Concentration, ppm@7%O2	ppm@7%O2	0.247	0.369	0.707	0.177
Concentration, ppm@12%CO2	ppm@12%CO2	0.244	0.371	0.704	0.177
Emission Rate, lb/hr	lb/hr	0.047	0.071	0.130	0.032

CONCENTRATION AND EMISSION RATE DATA SUMMARY

Client Name	Covanta Energy Group, Inc.	**Operator**	PJJ
Plant Name	Huntington Resource Recovery Facility	**Project #**	13022
Sampling Location	Unit 2 FF Outlet		

Run Number		5	6	7	8
Run Date		08/28/13	08/28/13	08/28/13	08/28/13
Run Start Time	hh:mm	1233	1312	1406	1446
Run Stop Time	hh:mm	1257	1336	1430	1510
Moisture Content	% H_20	18.3	18.3	16.9	16.9
Dry Mole Fraction	Mfd	0.817	0.817	0.831	0.831
Oxygen Percentage	% O_2	10.199	10.168	10.607	9.827
Carbon Dioxide Percentage	% CO_2	9.372	9.366	9.180	9.646
Dry Standard Stack Flow Rate	DSCFM	52,458	52,458	48,212	48,212
Air Flow and Moisture Taken From Test Run =>		2-O-M8-2	2-O-M8-2	2-O-M316-2	2-O-M316-2

Sulfur Dioxide					
Formula Weight	Fwt	64.06	64.06	64.06	64.06
Concentration, ppm (dry)	ppmvd	0.233	0.281	0.001	0.248
Concentration, ppm@7%O2	ppm@7%O2	0.303	0.364	0.001	0.311

Nitrogen Oxides as NO2					
Formula Weight	Fwt	46.01	46.01	46.01	46.01
Concentration, ppm (dry)	ppmvd	86.70	82.12	87.45	88.53
Concentration, ppm@7%O2	ppm@7%O2	112.618	106.361	118.095	111.132
Emission Rate, lb/hr	lb/hr	32.59	30.86	30.21	30.58

Carbon Monoxide					
Formula Weight	Fwt	28.01	28.01	28.01	28.01
Concentration, ppm (dry)	ppmvd	7.686	10.610	10.532	8.461
Concentration, ppm@7%O2	ppm@7%O2	9.984	13.742	14.223	10.621

Total Hydrocarbons (as Ethane)					
Formula Weight of Ethane	Fwt	30.06	30.06	30.06	30.06
Concentration, ppm (wet)	ppmvw	0.057	0.054	0.126	0.115
Concentration, ppm (dry)	ppmvd	0.070	0.066	0.152	0.138
Concentration, ppm@7%O2	ppm@7%O2	0.091	0.086	0.205	0.174
Concentration, ppm@12%CO2	ppm@12%CO2	0.089	0.085	0.198	0.172
Emission Rate, lb/hr	lb/hr	0.017	0.016	0.034	0.031

CONCENTRATION AND EMISSION RATE DATA SUMMARY

Client Name	Covanta Energy Group, Inc.	**Operator**	PJJ
Plant Name	Huntington Resource Recovery Facility	**Project #**	13022
Sampling Location	Unit 2 FF Outlet		

Run Number		9	10		
Run Date		08/28/13	08/28/13		
Run Start Time	hh:mm	1527	1608		
Run Stop Time	hh:mm	1551	1632		
Moisture Content	% H_2O	16.9	17.3		
Dry Mole Fraction	Mfd	0.831	0.827		
Oxygen Percentage	% O_2	10.104	9.863		
Carbon Dioxide Percentage	% CO_2	9.382	9.560		
Dry Standard Stack Flow Rate	DSCFM	48,212	49,628		
Air Flow and Moisture Taken From Test Run =>		2-O-M316-2	2-O-M8-3		

Sulfur Dioxide					
Formula Weight	Fwt	64.06	64.06		
Concentration, ppm (dry)	ppmvd	0.304	0.316		
Concentration, ppm@7%O2	ppm@7%O2	0.391	0.398		

Nitrogen Oxides as NO2					
Formula Weight	Fwt	46.01	46.01		
Concentration, ppm (dry)	ppmvd	87.47	87.71		
Concentration, ppm@7%O2	ppm@7%O2	112.619	110.462		
Emission Rate, lb/hr	lb/hr	30.21	31.19		

Carbon Monoxide					
Formula Weight	Fwt	28.01	28.01		
Concentration, ppm (dry)	ppmvd	8.024	12.015		
Concentration, ppm@7%O2	ppm@7%O2	10.331	15.132		

Total Hydrocarbons (as Ethane)					
Formula Weight of Ethane	Fwt	30.06	30.06		
Concentration, ppm (wet)	ppmvw	0.050	0.077		
Concentration, ppm (dry)	ppmvd	0.060	0.093		
Concentration, ppm@7%O2	ppm@7%O2	0.077	0.117		
Concentration, ppm@12%CO2	ppm@12%CO2	0.077	0.117		
Emission Rate, lb/hr	lb/hr	0.014	0.022		

Relative Accuracy - 40CFR60, Appendix B, Performance Specification 3

Oxygen - Inlet

Client:	Covanta Energy Group, Inc.	Project #:	13022
Facility:	Huntington Resource Recovery Facility	Operator:	PJJ
Test Location:	Unit 3 SDA Inlet		

Analyzer:	Servomex 1440	valid = valid result used in RATA
Serial Number:	3343	void = valid result not used in RATA
App. Standard:	NA	invalid = invalid result NOT TO BE used in RATA
Parameter Units:	percent, %	

Test Run #	Test Date	Test Start Time	Test Stop Time	Reference Method Result	Facility CEM Result	Test Status	Difference (Ref-Fac)	Difference Squared
1	08/29/13	803	827	10.517	10.2	void		
2	08/29/13	845	909	10.756	10.5	valid	0.256	0.066
3	08/29/13	928	952	10.550	10.4	valid	0.150	0.023
4	08/29/13	1007	1031	10.206	9.9	valid	0.306	0.094
5	08/29/13	1048	1112	9.938	9.7	valid	0.238	0.057
6	08/29/13	1127	1151	9.931	9.8	valid	0.131	0.017
7	08/29/13	1205	1229	10.400	10.1	valid	0.300	0.090
8	08/29/13	1246	1310	10.542	10.3	valid	0.242	0.059
9	08/29/13	1326	1350	10.083	9.9	valid	0.183	0.033
10	08/29/13	1405	1429	9.922	9.6	valid	0.322	0.104
11								
12								
13								
14								
15								
16								
			Averages:	10.259	10.022		0.236	

Standard Deviation	0.0690
Number of Tests	9
t-value	2.306
Confidence Coefficient	0.0530

Absolute Difference = 0.2

Relative Accuracy - 40CFR60, Appendix B, Performance Specification 3

Carbon Dioxide - Inlet

Client:	Covanta Energy Group, Inc.	Project #:	13022
Facility:	Huntington Resource Recovery Facility	Operator:	PJJ
Test Location:	Unit 3 SDA Inlet		

Analyzer:	Siemens Ultramat 21P	valid = valid result used in RATA
Serial Number:	A08-368	void = valid result not used in RATA
App. Standard:	NA	invalid = invalid result NOT TO BE used in RATA
Parameter Units:	percent, %	

Test Run #	Test Date	Test Start Time	Test Stop Time	Reference Method Result	Facility CEM Result	Test Status	Difference (Ref-Fac)	Difference Squared
1	08/29/13	803	827	9.110	9.5	valid	-0.390	0.152
2	08/29/13	845	909	8.783	9.2	void		
3	08/29/13	928	952	9.149	9.3	valid	-0.151	0.023
4	08/29/13	1007	1031	9.447	9.7	valid	-0.253	0.064
5	08/29/13	1048	1112	9.719	10.1	valid	-0.381	0.145
6	08/29/13	1127	1151	9.689	9.8	valid	-0.111	0.012
7	08/29/13	1205	1229	9.324	9.7	valid	-0.376	0.141
8	08/29/13	1246	1310	9.156	9.5	valid	-0.344	0.118
9	08/29/13	1326	1350	9.527	9.6	valid	-0.073	0.005
10	08/29/13	1405	1429	9.740	10.1	valid	-0.360	0.130
11								
12								
13								
14								
15								
16								
			Averages:	9.429	9.700		-0.271	

Standard Deviation	0.1275
Number of Tests	9
t-value	2.306
Confidence Coefficient	0.0980
Absolute Difference =	0.3

Relative Accuracy - 40CFR60, Appendix B, Performance Specification 2

Sulfur Dioxide - Inlet

Client:	Covanta Energy Group, Inc.	Project #:	13022
Facility:	Huntington Resource Recovery Facility	Operator:	PJJ
Test Location:	Unit 3 SDA Inlet		

Analyzer:	Western Research 921	valid = valid result used in RATA
Serial Number:	AX-921-9646-6	void = valid result not used in RATA
App. Standard:	NA	invalid = invalid result NOT TO BE used in RATA
Parameter Units:	ppm@7%O2	

Test Run #	Test Date	Test Start Time	Test Stop Time	Reference Method Result	Facility CEM Result	Test Status	Difference (Ref-Fac)	Difference Squared
1	08/29/13	803	827	70.953	68	valid	2.953	8.717
2	08/29/13	845	909	87.999	86	valid	1.999	3.994
3	08/29/13	928	952	66.411	63	valid	3.411	11.636
4	08/29/13	1007	1031	50.913	48	valid	2.913	8.485
5	08/29/13	1048	1112	132.051	136	valid	-3.949	15.592
6	08/29/13	1127	1151	165.725	161	void		
7	08/29/13	1205	1229	114.298	115	valid	-0.702	0.493
8	08/29/13	1246	1310	108.860	110	valid	-1.140	1.300
9	08/29/13	1326	1350	90.619	86	valid	4.619	21.337
10	08/29/13	1405	1429	82.073	82	valid	0.073	0.005
11								
12								
13								
14								
15								
16								
			Averages:	89.353	88.222		1.131	

Standard Deviation	2.7399
Number of Tests	9
t-value	2.306
Confidence Coefficient	2.1061

Relative Accuracy % of Reference Method: 3.6

CONCENTRATION AND EMISSION RATE DATA SUMMARY

Client Name	Covanta Energy Group, Inc.	**Operator**	PJJ
Plant Name	Huntington Resource Recovery Facility	**Project #**	13022
Sampling Location	Unit 3 SDA Inlet		

Run Number		1	2	3	4
Run Date		08/29/13	08/29/13	08/29/13	08/29/13
Run Start Time	hh:mm	803	845	928	1007
Run Stop Time	hh:mm	827	909	952	1031
Oxygen Percentage	% O_2	10.517	10.756	10.550	10.206
Carbon Dioxide Percentage	% CO_2	9.110	8.783	9.149	9.447

Sulfur Dioxide					
Formula Weight	Fwt	64.06	64.06	64.06	64.06
Concentration, ppm (dry)	ppmvd	63.00	64.22	49.45	39.17
Concentration, ppm@7%O2	ppm@7%O2	70.953	87.999	66.411	50.913

CONCENTRATION AND EMISSION RATE DATA SUMMARY

Client Name	Covanta Energy Group, Inc.	**Operator**	PJJ
Plant Name	Huntington Resource Recovery Facility	**Project #**	13022
Sampling Location	Unit 3 SDA Inlet		

Run Number		5	6	7	8
Run Date		08/29/13	08/29/13	08/29/13	08/29/13
Run Start Time	hh:mm	1048	1127	1205	1246
Run Stop Time	hh:mm	1112	1151	1229	1310
Oxygen Percentage	% O_2	9.938	9.931	10.400	10.542
Carbon Dioxide Percentage	% CO_2	9.719	9.689	9.324	9.156

Sulfur Dioxide					
Formula Weight	Fwt	64.06	64.06	64.06	64.06
Concentration, ppm (dry)	ppmvd	104.14	130.78	86.34	81.12
Concentration, ppm@7%O2	ppm@7%O2	132.051	165.725	114.298	108.860

CONCENTRATION AND EMISSION RATE DATA SUMMARY

Client Name	Covanta Energy Group, Inc.	**Operator**	PJJ
Plant Name	Huntington Resource Recovery Facility	**Project #**	13022
Sampling Location	Unit 3 SDA Inlet		

Run Number		9	10		
Run Date		08/29/13	08/29/13		
Run Start Time	hh:mm	1326	1405		
Run Stop Time	hh:mm	1350	1429		
Oxygen Percentage	% O_2	10.083	9.922		
Carbon Dioxide Percentage	% CO_2	9.527	9.740		

Sulfur Dioxide					
Formula Weight	Fwt	64.06	64.06		
Concentration, ppm (dry)	ppmvd	70.52	64.82		
Concentration, ppm@7%O2	ppm@7%O2	90.619	82.073		

Relative Accuracy - 40CFR60, Appendix B, Performance Specification 3

Oxygen - Outlet

Client:	Covanta Energy Group, Inc.	Project #:	13022
Facility:	Huntington Resource Recovery Facility	Operator:	PJJ
Test Location:	Unit 3 FF Outlet		

Analyzer:	CAI 650	valid = valid result used in RATA
Serial Number:	WO4038 O2	void = valid result not used in RATA
App. Standard:	NA	invalid = invalid result NOT TO BE used in RATA
Parameter Units:	percent, %	

Test Run #	Test Date	Test Start Time	Test Stop Time	Reference Method Result	Facility CEM Result	Test Status	Difference (Ref-Fac)	Difference Squared
1	08/29/13	803	827	10.998	10.9	valid	0.098	0.010
2	08/29/13	845	909	11.188	11.2	valid	-0.012	0.000
3	08/29/13	928	952	10.969	10.8	void		
4	08/29/13	1007	1031	10.633	10.5	valid	0.133	0.018
5	08/29/13	1048	1112	10.379	10.3	valid	0.079	0.006
6	08/29/13	1127	1151	10.400	10.4	valid	0.000	0.000
7	08/29/13	1205	1229	10.840	10.8	valid	0.040	0.002
8	08/29/13	1246	1310	10.965	11.0	valid	-0.035	0.001
9	08/29/13	1326	1350	10.579	10.6	valid	-0.021	0.000
10	08/29/13	1405	1429	10.369	10.3	valid	0.069	0.005
11								
12								
13								
14								
15								
16								
			Averages:	10.706	10.667		0.039	

Standard Deviation	0.0592
Number of Tests	9
t-value	2.306
Confidence Coefficient	0.0455

Absolute Difference = 0.0

Relative Accuracy - 40CFR60, Appendix B, Performance Specification 3

Carbon Dioxide - Outlet

Client:	Covanta Energy Group, Inc.	Project #:	13022
Facility:	Huntington Resource Recovery Facility	Operator:	PJJ
Test Location:	Unit 3 FF Outlet		

Analyzer:	Siemens Ultramat 21P	valid = valid result used in RATA
Serial Number:	A08-367	void = valid result not used in RATA
App. Standard:	NA	invalid = invalid result NOT TO BE used in RATA
Parameter Units:	percent, %	

Test Run #	Test Date	Test Start Time	Test Stop Time	Reference Method Result	Facility CEM Result	Test Status	Difference (Ref-Fac)	Difference Squared
1	08/29/13	803	827	8.803	8.8	valid	0.003	0.000
2	08/29/13	845	909	8.693	8.4	valid	0.293	0.086
3	08/29/13	928	952	8.848	8.8	valid	0.048	0.002
4	08/29/13	1007	1031	9.004	9.1	valid	-0.096	0.009
5	08/29/13	1048	1112	9.141	9.3	valid	-0.159	0.025
6	08/29/13	1127	1151	9.198	9.1	valid	0.098	0.010
7	08/29/13	1205	1229	8.926	8.8	valid	0.126	0.016
8	08/29/13	1246	1310	8.937	8.6	void		
9	08/29/13	1326	1350	8.961	8.9	valid	0.061	0.004
10	08/29/13	1405	1429	9.164	9.3	valid	-0.136	0.018
11								
12								
13								
14								
15								
16								
			Averages:	8.971	8.944		0.026	

Standard Deviation	0.1432
Number of Tests	9
t-value	2.306
Confidence Coefficient	0.1101

Absolute Difference = 0.0

Relative Accuracy - 40CFR60, Appendix B, Performance Specification 2

Sulfur Dioxide - Outlet

Client:	Covanta Energy Group, Inc.	Project #:	13022
Facility:	Huntington Resource Recovery Facility	Operator:	PJJ
Test Location:	Unit 3 FF Outlet		

Analyzer:	Western Research 921	valid = valid result used in RATA
Serial Number:	AX-921-9646-5	void = valid result not used in RATA
App. Standard:	29	invalid = invalid result NOT TO BE used in RATA
Parameter Units:	ppm@7%O2	

Test Run #	Test Date	Test Start Time	Test Stop Time	Reference Method Result	Facility CEM Result	Test Status	Difference (Ref-Fac)	Difference Squared
1	08/29/13	803	827	0.341	0	valid	0.341	0.116
2	08/29/13	845	909	0.957	0	valid	0.957	0.917
3	08/29/13	928	952	0.315	0	valid	0.315	0.099
4	08/29/13	1007	1031	0.356	0	valid	0.356	0.127
5	08/29/13	1048	1112	3.360	2	valid	1.360	1.849
6	08/29/13	1127	1151	16.566	14	void		
7	08/29/13	1205	1229	4.097	3	valid	1.097	1.203
8	08/29/13	1246	1310	1.969	1	valid	0.969	0.938
9	08/29/13	1326	1350	2.252	2	valid	0.252	0.063
10	08/29/13	1405	1429	1.093	0	valid	1.093	1.194
11								
12								
13								
14								
15								
16								
			Averages:	1.638	0.889		0.749	

Standard Deviation	0.4272
Number of Tests	9
t-value	2.306
Confidence Coefficient	0.3284

Relative Accuracy Percent of Standard: 3.7

Relative Accuracy - 40CFR60, Appendix B, Performance Specification 2

Nitrogen Oxides - Outlet

Client:	Covanta Energy Group, Inc.	Project #:	13022
Facility:	Huntington Resource Recovery Facility	Operator:	PJJ
Test Location:	Unit 3 FF Outlet		

Analyzer:	CAI 650	valid = valid result used in RATA
Serial Number:	WO4038 NOx	void = valid result not used in RATA
App. Standard:	185	invalid = invalid result NOT TO BE used in RATA
Parameter Units:	ppm@7%O2	

Test Run #	Test Date	Test Start Time	Test Stop Time	Reference Method Result	Facility CEM Result	Test Status	Difference (Ref-Fac)	Difference Squared
1	08/29/13	803	827	109.900	109	valid	0.900	0.810
2	08/29/13	845	909	111.764	112	valid	-0.236	0.056
3	08/29/13	928	952	109.117	110	valid	-0.883	0.779
4	08/29/13	1007	1031	111.815	113	valid	-1.185	1.405
5	08/29/13	1048	1112	109.564	111	valid	-1.436	2.061
6	08/29/13	1127	1151	117.303	118	valid	-0.697	0.486
7	08/29/13	1205	1229	106.392	108	void		
8	08/29/13	1246	1310	110.403	111	valid	-0.597	0.357
9	08/29/13	1326	1350	117.128	117	valid	0.128	0.017
10	08/29/13	1405	1429	111.783	113	valid	-1.217	1.480
11								
12								
13								
14								
15								
16								
			Averages:	112.086	112.667		-0.580	

Standard Deviation	0.7433
Number of Tests	9
t-value	2.306
Confidence Coefficient	0.5714

Relative Accuracy % of Reference Method: 1.0

Relative Accuracy - 40CFR60, Appendix B, Performance Specification 6

Nitrogen Oxides - Outlet

Client:	Covanta Energy Group, Inc.	Project #:	13022
Facility:	Huntington Resource Recovery Facility	Operator:	PJJ
Test Location:	Unit 3 FF Outlet		

Analyzer:	CAI 650	valid = valid result used in RATA
Serial Number:	WO4038 NOx	void = valid result not used in RATA
App. Standard:	NA	invalid = invalid result NOT TO BE used in RATA
Parameter Units:	lb/hr	

Test Run #	Test Date	Test Start Time	Test Stop Time	Reference Method Result	Facility CEM Result	Test Status	Difference (Ref-Fac)	Difference Squared
1	08/29/13	803	827	26.77	26.61	valid	0.162	0.026
2	08/29/13	845	909	26.70	27.41	valid	-0.707	0.500
3	08/29/13	928	952	27.72	26.88	valid	0.840	0.705
4	08/29/13	1007	1031	29.37	28.19	valid	1.176	1.382
5	08/29/13	1048	1112	29.87	27.23	void		
6	08/29/13	1127	1151	31.92	29.62	valid	2.296	5.270
7	08/29/13	1205	1229	27.44	26.52	valid	0.919	0.844
8	08/29/13	1246	1310	28.12	26.96	valid	1.159	1.344
9	08/29/13	1326	1350	30.22	29.00	valid	1.223	1.497
10	08/29/13	1405	1429	29.43	27.60	valid	1.831	3.353
11								
12								
13								
14								
15								
16								
			Averages:	28.632	27.643		0.989	

Standard Deviation	0.8748
Number of Tests	9
t-value	2.306
Confidence Coefficient	0.6725

Relative Accuracy % of Reference Method: 5.8

Relative Accuracy - 40CFR60, Appendix B, Performance Specification 4A

Carbon Monoxide - Low - Outlet

Client:	Covanta Energy Group, Inc.	Project #:	13022
Facility:	Huntington Resource Recovery Facility	Operator:	PJJ
Test Location:	Unit 3 FF Outlet		

Analyzer:	TECO 48i	valid = valid result used in RATA
Serial Number:	0636119865L	void = valid result not used in RATA
App. Standard:	100	invalid = invalid result NOT TO BE used in RATA
Parameter Units:	ppm@7%O2	

Test Run #	Test Date	Test Start Time	Test Stop Time	Reference Method Result	Facility CEM Result	Test Status	Difference (Ref-Fac)	Difference Squared
1	08/29/13	803	827	24.519	23	valid	1.519	2.309
2	08/29/13	845	909	37.107	34	void		
3	08/29/13	928	952	23.517	21	valid	2.517	6.336
4	08/29/13	1007	1031	16.906	15	valid	1.906	3.631
5	08/29/13	1048	1112	27.369	26	valid	1.369	1.875
6	08/29/13	1127	1151	24.287	23	valid	1.287	1.655
7	08/29/13	1205	1229	29.019	28	valid	1.019	1.038
8	08/29/13	1246	1310	25.200	23	valid	2.200	4.842
9	08/29/13	1326	1350	20.945	19	valid	1.945	3.783
10	08/29/13	1405	1429	14.497	12	valid	2.497	6.233
11								
12								
13								
14								
15								
16								
			Averages:	22.918	21.111		1.807	

Standard Deviation	0.5397
Number of Tests	9
t-value	2.306
Confidence Coefficient	0.4148

Relative Accuracy % of Reference Method: 9.7

Relative Accuracy - 40CFR60, Appendix B, Performance Specification 4A

Carbon Monoxide - High - Outlet

Client:	Covanta Energy Group, Inc.	Project #:	13022
Facility:	Huntington Resource Recovery Facility	Operator:	PJJ
Test Location:	Unit 3 FF Outlet		

Analyzer:	TECO 48i	valid = valid result used in RATA
Serial Number:	0636119865H	void = valid result not used in RATA
App. Standard:	100	invalid = invalid result NOT TO BE used in RATA
Parameter Units:	ppm@7%O2	

Test Run #	Test Date	Test Start Time	Test Stop Time	Reference Method Result	Facility CEM Result	Test Status	Difference (Ref-Fac)	Difference Squared
1	08/29/13	803	827	24.519	23	valid	1.519	2.309
2	08/29/13	845	909	37.107	34	void		
3	08/29/13	928	952	23.517	21	valid	2.517	6.336
4	08/29/13	1007	1031	16.906	15	valid	1.906	3.631
5	08/29/13	1048	1112	27.369	26	valid	1.369	1.875
6	08/29/13	1127	1151	24.287	23	valid	1.287	1.655
7	08/29/13	1205	1229	29.019	28	valid	1.019	1.038
8	08/29/13	1246	1310	25.200	23	valid	2.200	4.842
9	08/29/13	1326	1350	20.945	19	valid	1.945	3.783
10	08/29/13	1405	1429	14.497	12	valid	2.497	6.233
11								
12								
13								
14								
15								
16								
			Averages:	22.918	21.111		1.807	

Standard Deviation	0.5397
Number of Tests	9
t-value	2.306
Confidence Coefficient	0.4148

Relative Accuracy % of Reference Method: 9.7

CONCENTRATION AND EMISSION RATE DATA SUMMARY

Client Name	Covanta Energy Group, Inc.	**Operator**	PJJ
Plant Name	Huntington Resource Recovery Facility	**Project #**	13022
Sampling Location	Unit 3 FF Outlet		

Run Number		1	2	3	4
Run Date		08/29/13	08/29/13	08/29/13	08/29/13
Run Start Time	hh:mm	803	845	928	1007
Run Stop Time	hh:mm	827	909	952	1031
Moisture Content	% H_20	21.3	21.3	17.5	17.5
Dry Mole Fraction	Mfd	0.787	0.787	0.825	0.825
Oxygen Percentage	% O_2	10.998	11.188	10.969	10.633
Carbon Dioxide Percentage	% CO_2	8.803	8.693	8.848	9.004
Dry Standard Stack Flow Rate	DSCFM	47,727	47,727	49,626	49,626
Air Flow and Moisture Taken From Test Run =>		3-O-M8-1	3-O-M8-1	3-O-M316-1	3-O-M316-1

Sulfur Dioxide					
Formula Weight	Fwt	64.06	64.06	64.06	64.06
Concentration, ppm (dry)	ppmvd	0.248	0.669	0.225	0.263
Concentration, ppm@7%O2	ppm@7%O2	0.341	0.957	0.315	0.356

Nitrogen Oxides as NO2					
Formula Weight	Fwt	46.01	46.01	46.01	46.01
Concentration, ppm (dry)	ppmvd	78.29	78.09	77.96	82.59
Concentration, ppm@7%O2	ppm@7%O2	109.900	111.764	109.117	111.815
Emission Rate, lb/hr	lb/hr	26.77	26.70	27.72	29.37

Carbon Monoxide					
Formula Weight	Fwt	28.01	28.01	28.01	28.01
Concentration, ppm (dry)	ppmvd	17.467	25.927	16.802	12.487
Concentration, ppm@7%O2	ppm@7%O2	24.519	37.107	23.517	16.906

Total Hydrocarbons (as Ethane)					
Formula Weight of Ethane	Fwt	30.06	30.06	30.06	30.06
Concentration, ppm (wet)	ppmvw	0.099	0.100	0.054	0.005
Concentration, ppm (dry)	ppmvd	0.126	0.127	0.065	0.006
Concentration, ppm@7%O2	ppm@7%O2	0.177	0.182	0.092	0.008
Concentration, ppm@12%CO2	ppm@12%CO2	0.171	0.175	0.089	0.008
Emission Rate, lb/hr	lb/hr	0.028	0.028	0.015	0.001

CONCENTRATION AND EMISSION RATE DATA SUMMARY

Client Name	Covanta Energy Group, Inc.	**Operator**	PJJ
Plant Name	Huntington Resource Recovery Facility	**Project #**	13022
Sampling Location	Unit 3 FF Outlet		

Run Number		5	6	7	8
Run Date		08/29/13	08/29/13	08/29/13	08/29/13
Run Start Time	hh:mm	1048	1127	1205	1246
Run Stop Time	hh:mm	1112	1151	1229	1310
Moisture Content	% H_20	16.8	16.8	18.9	18.9
Dry Mole Fraction	Mfd	0.832	0.832	0.811	0.811
Oxygen Percentage	% O_2	10.379	10.400	10.840	10.965
Carbon Dioxide Percentage	% CO_2	9.141	9.198	8.926	8.937
Dry Standard Stack Flow Rate	DSCFM	50,271	50,271	49,736	49,736
Air Flow and Moisture Taken From Test Run =>		3-O-M8-2	3-O-M8-2	3-O-M316-2	3-O-M316-2

Sulfur Dioxide					
Formula Weight	Fwt	64.06	64.06	64.06	64.06
Concentration, ppm (dry)	ppmvd	2.543	12.514	2.965	1.407
Concentration, ppm@7%O2	ppm@7%O2	3.360	16.566	4.097	1.969

Nitrogen Oxides as NO2					
Formula Weight	Fwt	46.01	46.01	46.01	46.01
Concentration, ppm (dry)	ppmvd	82.93	88.61	77.00	78.91
Concentration, ppm@7%O2	ppm@7%O2	109.564	117.303	106.392	110.403
Emission Rate, lb/hr	lb/hr	29.87	31.92	27.44	28.12

Carbon Monoxide					
Formula Weight	Fwt	28.01	28.01	28.01	28.01
Concentration, ppm (dry)	ppmvd	20.716	18.346	21.002	18.012
Concentration, ppm@7%O2	ppm@7%O2	27.369	24.287	29.019	25.200

Total Hydrocarbons (as Ethane)					
Formula Weight of Ethane	Fwt	30.06	30.06	30.06	30.06
Concentration, ppm (wet)	ppmvw	0.094	0.193	0.090	0.116
Concentration, ppm (dry)	ppmvd	0.113	0.232	0.111	0.143
Concentration, ppm@7%O2	ppm@7%O2	0.149	0.307	0.153	0.200
Concentration, ppm@12%CO2	ppm@12%CO2	0.148	0.303	0.149	0.192
Emission Rate, lb/hr	lb/hr	0.027	0.055	0.026	0.033

CONCENTRATION AND EMISSION RATE DATA SUMMARY

Client Name	Covanta Energy Group, Inc.	**Operator**	PJJ
Plant Name	Huntington Resource Recovery Facility	**Project #**	13022
Sampling Location	Unit 3 FF Outlet		

Run Number		9	10		
Run Date		08/29/13	08/29/13		
Run Start Time	hh:mm	1326	1405		
Run Stop Time	hh:mm	1350	1429		
Moisture Content	% H_20	19.7	19.7		
Dry Mole Fraction	Mfd	0.803	0.803		
Oxygen Percentage	% O_2	10.679	10.369		
Carbon Dioxide Percentage	% CO_2	8.961	9.164		
Dry Standard Stack Flow Rate	DSCFM	48,503	48,503		
Air Flow and Moisture Taken From Test Run =>		3-O-M8-3	3-O-M8-3		

Sulfur Dioxide					
Formula Weight	Fwt	64.06	64.06		
Concentration, ppm (dry)	ppmvd	1.672	0.828		
Concentration, ppm@7%O2	ppm@7%O2	2.252	1.093		

Nitrogen Oxides as NO2					
Formula Weight	Fwt	46.01	46.01		
Concentration, ppm (dry)	ppmvd	86.97	84.69		
Concentration, ppm@7%O2	ppm@7%O2	117.128	111.783		
Emission Rate, lb/hr	lb/hr	30.22	29.43		

Carbon Monoxide					
Formula Weight	Fwt	28.01	28.01		
Concentration, ppm (dry)	ppmvd	15.552	10.983		
Concentration, ppm@7%O2	ppm@7%O2	20.945	14.497		

Total Hydrocarbons (as Ethane)					
Formula Weight of Ethane	Fwt	30.06	30.06		
Concentration, ppm (wet)	ppmvw	0.096	0.033		
Concentration, ppm (dry)	ppmvd	0.120	0.041		
Concentration, ppm@7%O2	ppm@7%O2	0.161	0.054		
Concentration, ppm@12%CO2	ppm@12%CO2	0.160	0.054		
Emission Rate, lb/hr	lb/hr	0.027	0.009		

APPENDIX B

Reference Method Field Data

O_2, CO_2, SO_2, NO_x, and CO

Calibration Error Test, Run 1 STRATA Version 3.2
Operator: Phil Juneau
Plant Name: Covanta Huntington RRF
Location: Unit 1

Reference Cylinder Numbers

	Zero	Low-range	Mid-range	High-range
O2-Out		CC427661	CC421867	CC175833
CO2-O		CC427661	CC421867	CC175833
SO2-O		CC39675	CC326338	FF4708
NOx-O		CC323813	SG9152406BAL	CC120144
CO-O		CC36020	CC177291	FF35824
O2-In		CC427661	CC421867	CC175833
CO2-In		CC427661	CC421867	CC175833
SO2-In		CC283725	CC33466	CC220121
THC-O		CC432372	FF27519	FF14840

Date/Time 08-27-2013 08:00:29 PASSED

Analyte	O2-Out	CO2-O	SO2-O	NOx-O	CO-O	O2-In	CO2-In	SO2-In	THC-O
Units	%	%	ppm	ppm	ppm	%	%	ppm	ppm
Zero Ref Cyl	0.000	0.000	0.000	0.00	0.000	0.000	0.000	0.00	0.000
Zero Avg	-0.012	-0.033	-0.056	-0.08	0.228	0.005	-0.006	0.38	0.023
Zero Error%	0.1%	0.2%	0.1%	0.0%	0.2%	0.0%	0.0%	0.1%	0.1%
Low Ref Cyl				50.60					9.944
Low Avg				46.90					9.997
Low Error%				0.8%					0.2%
Mid Ref Cyl	10.070	9.094	47.160	234.70	45.070	10.070	9.094	244.70	15.030
Mid Avg	10.087	8.951	48.131	240.41	45.015	10.095	9.056	246.53	15.160
Mid Error%	0.1%	0.8%	1.1%	1.2%	0.1%	0.1%	0.2%	0.4%	0.4%
High Ref Cyl	21.910	18.040	91.830	484.80	91.380	21.910	18.040	491.60	24.270
High Avg	21.956	18.371	91.698	485.87	91.543	21.957	18.103	493.63	24.257
High Error%	0.2%	1.8%	0.1%	0.2%	0.2%	0.2%	0.3%	0.4%	0.0%

Conv. Eff.

Calibration Error Test End

Initial System Bias Check, Run 1 STRATA Version 3.2
Operator: Phil Juneau
Plant Name: Covanta Huntington RRF
Location: Unit 1

Reference Cylinder Numbers

	Zero	Span
O2-Out		CC421867
CO2-O		CC421867
SO2-O		CC326338
NOx-O		SG9152406BAL
CO-O		CC177291
O2-In		CC421867
CO2-In		CC421867
SO2-In		CC33466
THC-O		CC432372

Date/Time 08-27-2013 08:32:49 PASSED

Analyte	O2-Out	CO2-O	SO2-O	NOx-O	CO-O	O2-In	CO2-In	SO2-In	THC-O
Units	%	%	ppm	ppm	ppm	%	%	ppm	ppm
Zero Ref Cyl	0.000	0.000	0.000	0.00	0.000	0.000	0.000	0.00	0.000
Zero Cal	-0.012	-0.033	-0.056	-0.08	0.228	0.005	-0.006	0.38	0.023
Zero Avg	-0.012	-0.035	0.077	0.99	0.237	0.017	-0.092	0.36	0.069
Zero Bias%	0.0%	0.0%	0.1%	0.2%	0.0%	0.1%	0.5%	0.0%	0.2%
Zero Drift%									
Span Ref Cyl	10.070	9.094	47.160	234.70	45.070	10.070	9.094	244.70	9.944
Span Cal	10.087	8.951	48.131	240.41	45.015	10.095	9.056	246.53	9.997
Span Avg	9.978	8.913	45.171	237.18	44.110	10.032	8.961	234.92	10.126
Span Bias%	0.5%	0.2%	3.2%	0.7%	1.0%	0.3%	0.5%	2.4%	0.4%
Span Drift%									

System Bias Check End

Test Run 1 STRATA Version 3.2

	O2-Out %	CO2-O %	SO2-O ppm	NOx-O ppm	CO-O ppm	O2-In %	CO2-In %	SO2-In ppm	THC-O ppm
Begin calculating run averages									
08-27-2013 09:05:01	12.076	8.195	0.845	62.63	22.389	10.911	8.548	52.91	0.231
08-27-2013 09:06:01	11.432	8.362	0.913	90.94	24.942	9.994	9.373	61.84	0.230
08-27-2013 09:07:02	11.357	8.538	0.835	94.51	22.982	10.251	9.015	67.79	0.226
08-27-2013 09:08:02	11.620	8.423	0.871	71.99	21.552	10.609	8.691	73.43	0.218
08-27-2013 09:09:02	11.663	8.339	0.836	64.86	23.094	10.339	8.921	79.15	0.220
08-27-2013 09:10:02	11.568	8.397	0.887	76.14	22.431	10.503	8.719	75.89	0.221
08-27-2013 09:11:02	12.075	8.251	0.911	70.30	19.716	10.910	8.393	72.36	0.229
08-27-2013 09:12:02	11.975	8.202	0.848	66.87	23.182	10.742	8.604	72.85	0.218
08-27-2013 09:13:02	11.202	8.390	0.902	86.94	28.625	9.659	9.682	85.92	0.209
08-27-2013 09:14:02	10.980	8.681	0.834	90.14	23.841	10.021	9.229	79.54	0.199
08-27-2013 09:15:02	11.779	8.464	0.963	75.84	19.540	10.905	8.516	66.71	0.211
08-27-2013 09:16:02	11.789	8.330	0.861	76.90	22.944	10.837	8.572	69.60	0.204
08-27-2013 09:17:02	12.085	8.270	0.940	70.75	20.451	11.182	8.229	70.29	0.212
08-27-2013 09:18:02	11.897	8.225	0.950	71.39	22.982	10.630	8.855	73.18	0.210
08-27-2013 09:19:02	11.108	8.514	0.909	83.97	26.653	9.837	9.479	89.13	0.198
08-27-2013 09:20:02	11.196	8.585	0.903	85.93	18.558	10.044	9.322	89.46	0.198
08-27-2013 09:21:02	10.954	8.610	0.863	84.74	17.829	9.543	9.791	98.43	0.188
08-27-2013 09:22:02	10.421	8.819	0.935	98.00	17.910	9.171	10.054	104.05	0.179
08-27-2013 09:23:02	10.621	8.832	0.993	115.47	14.767	9.582	9.603	90.75	0.192
08-27-2013 09:24:02	10.729	8.719	1.043	108.31	14.181	9.505	9.766	82.66	0.176
08-27-2013 09:25:02	10.702	8.785	1.081	95.07	15.376	9.678	9.502	81.43	0.172
08-27-2013 09:26:02	10.902	8.662	1.066	84.81	15.616	9.804	9.421	78.72	0.164
08-27-2013 09:27:02	11.005	8.634	1.072	79.36	16.652	9.984	9.229	75.91	0.160
08-27-2013 09:28:02	11.481	8.494	1.056	69.47	16.635	10.510	8.795	66.64	0.163
Run Averages	O2-Out %	CO2-O %	SO2-O ppm	NOx-O ppm	CO-O ppm	O2-In %	CO2-In %	SO2-In ppm	THC-O ppm
08-27-2013 09:28:02	11.359	8.488	0.930	82.31	20.535	10.215	9.096	77.44	0.201

Operator: Phil Juneau
Plant Name: Covanta Huntington RRF
Location: Unit 1
Test Run 1 End

Final System Bias Check, Run 1 STRATA Version 3.2
Operator: Phil Juneau
Plant Name: Covanta Huntington RRF
Location: Unit 1

Reference Cylinder Numbers

	Zero	Span
O2-Out		CC421867
CO2-O		CC421867
SO2-O		CC326338
NOx-O		SG9152406BAL
CO-O		CC177291
O2-In		CC421867
CO2-In		CC421867
SO2-In		CC33466
THC-O		CC432372

Date/Time 08-27-2013 09:40:41 PASSED

Analyte	O2-Out	CO2-O	SO2-O	NOx-O	CO-O	O2-In	CO2-In	SO2-In	THC-O
Units	%	%	ppm	ppm	ppm	%	%	ppm	ppm
Zero Ref Cyl	0.000	0.000	0.000	0.00	0.000	0.000	0.000	0.00	0.000
Zero Cal	-0.012	-0.033	-0.056	-0.08	0.228	0.005	-0.006	0.38	0.023
Zero Avg	-0.013	-0.034	1.077	1.28	0.273	0.024	-0.162	0.26	0.036
Zero Bias%	0.0%	0.0%	1.2%	0.3%	0.0%	0.1%	0.9%	0.0%	0.0%
Zero Drift%	0.0%	0.0%	1.1%	0.1%	0.0%	0.0%	-0.4%	0.0%	-0.1%
Span Ref Cyl	10.070	9.094	47.160	234.70	45.070	10.070	9.094	244.70	9.944
Span Cal	10.087	8.951	48.131	240.41	45.015	10.095	9.056	246.53	9.997
Span Avg	9.991	8.926	45.461	237.83	44.335	10.070	8.889	240.46	9.974
Span Bias%	0.4%	0.1%	2.9%	0.5%	0.7%	0.1%	0.9%	1.2%	0.1%
Span Drift%	0.1%	0.1%	0.3%	0.1%	0.2%	0.2%	-0.4%	1.1%	-0.5%
Ini Zero Avg	-0.012	-0.035	0.077	0.99	0.237	0.017	-0.092	0.36	0.069
Ini Span Avg	9.978	8.913	45.171	237.18	44.110	10.032	8.961	234.92	10.126
Run Avg	11.359	8.488	0.930	82.31	20.535	10.215	9.096	77.44	0.201
Co	-0.012	-0.034	0.577	1.13	0.255	0.021	-0.127	0.31	0.053
Cm	9.984	8.920	45.316	237.51	44.223	10.051	8.925	237.69	10.050
Correct Avg	11.454	8.656	0.372	80.60	20.789	10.234	9.266	79.51	0.148

System Bias Check End

Test Run 2 STRATA Version 3.2

	O2-Out %	CO2-O %	SO2-O ppm	NOx-O ppm	CO-O ppm	O2-In %	CO2-In %	SO2-In ppm	THC-O ppm
Begin calculating run averages									
08-27-2013 09:47:01	11.762	8.304	2.325	36.00	6.162	10.671	8.525	83.87	0.196
08-27-2013 09:48:01	10.450	8.514	2.039	110.46	8.916	8.755	10.221	117.78	0.201
08-27-2013 09:49:01	11.277	8.685	2.114	81.18	6.522	10.374	8.697	87.02	0.203
08-27-2013 09:50:01	12.230	8.222	2.251	30.94	4.514	11.163	8.027	84.36	0.195
08-27-2013 09:51:01	11.964	8.094	2.040	47.45	8.556	10.383	8.836	108.14	0.191
08-27-2013 09:52:01	11.356	8.376	1.960	88.56	8.929	9.983	9.154	112.12	0.195
08-27-2013 09:53:01	11.240	8.458	2.831	102.52	7.938	9.886	9.293	123.01	0.195
08-27-2013 09:54:01	11.197	8.518	4.649	87.69	9.085	9.954	9.159	129.82	0.186
08-27-2013 09:55:01	11.893	8.370	5.741	48.56	8.243	11.067	8.035	101.89	0.182
08-27-2013 09:56:01	12.174	8.040	4.603	46.11	9.430	10.661	8.584	109.86	0.182
08-27-2013 09:57:01	10.949	8.446	6.327	99.48	9.805	9.531	9.432	156.04	0.186
08-27-2013 09:58:01	11.624	8.437	14.787	86.29	7.366	10.628	8.412	120.84	0.197
08-27-2013 09:59:01	12.219	8.129	10.070	54.02	6.164	11.081	8.052	94.16	0.186
08-27-2013 10:00:01	11.615	8.166	6.470	75.90	8.598	10.102	8.957	96.05	0.186
08-27-2013 10:01:01	11.670	8.350	6.736	83.41	7.848	10.653	8.352	89.29	0.196
08-27-2013 10:02:01	12.219	8.104	5.718	63.87	6.988	11.059	8.064	77.00	0.192
08-27-2013 10:03:01	12.219	8.060	4.500	68.58	7.852	10.950	8.189	65.47	0.193
08-27-2013 10:04:01	11.691	8.141	4.016	88.79	8.394	10.094	9.024	66.64	0.188
08-27-2013 10:05:01	11.196	8.505	3.861	108.18	8.301	9.995	8.940	66.73	0.197
08-27-2013 10:06:01	12.283	8.193	3.729	70.58	6.257	11.275	7.888	52.86	0.200
08-27-2013 10:07:01	12.702	7.952	3.119	56.31	9.133	11.657	7.587	52.77	0.196
08-27-2013 10:08:01	12.702	7.886	2.519	69.46	12.714	11.370	7.993	64.32	0.199
08-27-2013 10:09:01	11.832	8.167	2.211	81.41	16.256	10.376	8.849	89.14	0.195
08-27-2013 10:10:01	11.524	8.319	2.095	80.83	16.519	9.919	9.325	109.98	0.188
Run Averages	O2-Out %	CO2-O %	SO2-O ppm	NOx-O ppm	CO-O ppm	O2-In %	CO2-In %	SO2-In ppm	THC-O ppm
08-27-2013 10:10:01	11.749	8.268	4.446	73.61	8.770	10.483	8.650	94.13	0.193

Operator: Phil Juneau
Plant Name: Covanta Huntington RRF
Location: Unit 1
Test Run 2 End

Final System Bias Check, Run 2 STRATA Version 3.2
Operator: Phil Juneau
Plant Name: Covanta Huntington RRF
Location: Unit 1

Reference Cylinder Numbers

	Zero	Span
O2-Out		CC421867
CO2-O		CC421867
SO2-O		CC326338
NOx-O		SG9152406BAL
CO-O		CC177291
O2-In		CC421867
CO2-In		CC421867
SO2-In		CC33466
THC-O		CC432372

Date/Time 08-27-2013 10:22:16 PASSED

Analyte	O2-Out	CO2-O	SO2-O	NOx-O	CO-O	O2-In	CO2-In	SO2-In	THC-O
Units	%	%	ppm	ppm	ppm	%	%	ppm	ppm
Zero Ref Cyl	0.000	0.000	0.000	0.00	0.000	0.000	0.000	0.00	0.000
Zero Cal	-0.012	-0.033	-0.056	-0.08	0.228	0.005	-0.006	0.38	0.023
Zero Avg	-0.016	-0.030	1.327	1.13	0.266	0.021	-0.143	0.94	-0.025
Zero Bias%	0.0%	0.0%	1.5%	0.3%	0.0%	0.1%	0.8%	0.1%	0.2%
Zero Drift%	0.0%	0.0%	0.3%	0.0%	0.0%	0.0%	0.1%	0.1%	-0.2%
Span Ref Cyl	10.070	9.094	47.160	234.70	45.070	10.070	9.094	244.70	9.944
Span Cal	10.087	8.951	48.131	240.41	45.015	10.095	9.056	246.53	9.997
Span Avg	9.991	8.920	45.717	237.22	44.335	10.063	8.910	240.25	9.977
Span Bias%	0.4%	0.2%	2.6%	0.7%	0.7%	0.1%	0.8%	1.3%	0.1%
Span Drift%	0.0%	0.0%	0.3%	-0.1%	0.0%	0.0%	0.1%	0.0%	0.0%
Ini Zero Avg	-0.013	-0.034	1.077	1.28	0.273	0.024	-0.162	0.26	0.036
Ini Span Avg	9.991	8.926	45.461	237.83	44.335	10.070	8.889	240.46	9.974
Run Avg	11.749	8.268	4.446	73.61	8.770	10.483	8.650	94.13	0.193
Co	-0.015	-0.032	1.202	1.20	0.269	0.023	-0.153	0.60	0.006
Cm	9.991	8.923	45.589	237.52	44.335	10.067	8.899	240.35	9.976
Correct Avg	11.839	8.429	3.447	71.91	8.695	10.487	8.843	95.46	0.187

System Bias Check End

Test Run 3 STRATA Version 3.2

	O2-Out %	CO2-O %	SO2-O ppm	NOx-O ppm	CO-O ppm	O2-In %	CO2-In %	SO2-In ppm	THC-O ppm
Begin calculating run averages									
08-27-2013 10:27:01	11.049	8.668	2.525	66.70	10.311	9.632	9.567	61.83	0.165
08-27-2013 10:28:01	11.118	8.517	2.160	74.23	12.168	9.392	9.839	50.67	0.156
08-27-2013 10:29:01	11.299	8.596	1.983	85.82	14.716	9.944	9.314	41.41	0.165
08-27-2013 10:30:01	11.500	8.449	1.812	88.16	13.068	9.958	9.358	39.67	0.165
08-27-2013 10:31:01	11.366	8.466	1.690	79.36	14.799	9.821	9.471	41.40	0.161
08-27-2013 10:32:01	11.020	8.560	1.602	75.03	18.629	9.358	9.906	55.20	0.122
08-27-2013 10:33:01	11.031	8.675	1.554	83.73	15.479	9.683	9.567	48.47	0.139
08-27-2013 10:34:01	11.305	8.510	1.483	94.70	13.406	9.865	9.413	47.97	0.149
08-27-2013 10:35:01	11.338	8.514	1.513	89.47	14.006	9.851	9.407	46.39	0.143
08-27-2013 10:36:01	11.381	8.462	1.378	75.18	13.778	9.978	9.286	43.71	0.131
08-27-2013 10:37:01	11.563	8.436	1.399	58.38	17.114	10.192	9.164	43.95	0.129
08-27-2013 10:38:01	11.076	8.514	1.397	72.11	17.902	9.478	9.734	47.87	0.113
08-27-2013 10:39:01	10.994	8.639	1.426	91.55	15.649	9.629	9.547	47.91	0.125
08-27-2013 10:40:01	11.395	8.489	1.358	80.73	15.267	9.922	9.323	42.97	0.127
08-27-2013 10:41:01	11.073	8.512	1.384	85.89	13.412	9.352	9.847	51.90	0.114
08-27-2013 10:42:01	10.816	8.650	1.279	114.73	12.216	9.240	9.931	49.68	0.126
08-27-2013 10:43:01	11.043	8.628	1.387	94.56	10.297	9.503	9.693	59.96	0.121
08-27-2013 10:44:01	11.104	8.584	1.348	81.66	9.533	9.697	9.514	64.16	0.117
08-27-2013 10:45:01	11.450	8.466	1.428	68.44	10.443	9.920	9.353	61.48	0.134
08-27-2013 10:46:01	11.336	8.445	1.393	72.61	10.887	9.587	9.632	62.87	0.130
08-27-2013 10:47:01	11.304	8.513	1.357	91.33	8.718	9.601	9.644	57.92	0.156
08-27-2013 10:48:01	11.188	8.539	1.345	78.36	8.094	9.803	9.450	55.12	0.136
08-27-2013 10:49:01	11.457	8.446	1.288	59.59	8.297	9.957	9.306	54.40	0.139
08-27-2013 10:50:01	11.655	8.398	1.346	69.22	10.318	10.141	9.184	52.31	0.142
Run Averages	O2-Out %	CO2-O %	SO2-O ppm	NOx-O ppm	CO-O ppm	O2-In %	CO2-In %	SO2-In ppm	THC-O ppm
08-27-2013 10:50:01	11.244	8.528	1.535	80.48	12.854	9.729	9.519	51.22	0.138

Operator: Phil Juneau
Plant Name: Covanta Huntington RRF
Location: Unit 1
Test Run 3 End

Final System Bias Check, Run 3 STRATA Version 3.2
Operator: Phil Juneau
Plant Name: Covanta Huntington RRF
Location: Unit 1

Reference Cylinder Numbers

	Zero	Span
O2-Out		CC421867
CO2-O		CC421867
SO2-O		CC326338
NOx-O		SG9152406BAL
CO-O		CC177291
O2-In		CC421867
CO2-In		CC421867
SO2-In		CC33466
THC-O		CC432372

Date/Time 08-27-2013 10:59:34 PASSED

Analyte	O2-Out	CO2-O	SO2-O	NOx-O	CO-O	O2-In	CO2-In	SO2-In	THC-O
Units	%	%	ppm	ppm	ppm	%	%	ppm	ppm
Zero Ref Cyl	0.000	0.000	0.000	0.00	0.000	0.000	0.000	0.00	0.000
Zero Cal	-0.012	-0.033	-0.056	-0.08	0.228	0.005	-0.006	0.38	0.023
Zero Avg	-0.014	-0.038	1.311	1.27	0.286	0.027	-0.143	0.36	0.031
Zero Bias%	0.0%	0.0%	1.5%	0.3%	0.1%	0.1%	0.8%	0.0%	0.0%
Zero Drift%	0.0%	0.0%	0.0%	0.0%	0.0%	0.0%	0.0%	-0.1%	0.2%
Span Ref Cyl	10.070	9.094	47.160	234.70	45.070	10.070	9.094	244.70	9.944
Span Cal	10.087	8.951	48.131	240.41	45.015	10.095	9.056	246.53	9.997
Span Avg	9.990	8.904	45.950	236.77	44.313	10.069	8.903	240.19	9.899
Span Bias%	0.4%	0.3%	2.4%	0.8%	0.8%	0.1%	0.8%	1.3%	0.3%
Span Drift%	0.0%	-0.1%	0.3%	-0.1%	0.0%	0.0%	0.0%	0.0%	-0.3%
Ini Zero Avg	-0.016	-0.030	1.327	1.13	0.266	0.021	-0.143	0.94	-0.025
Ini Span Avg	9.991	8.920	45.717	237.22	44.335	10.063	8.910	240.25	9.977
Run Avg	11.244	8.528	1.535	80.48	12.854	9.729	9.519	51.22	0.138
Co	-0.015	-0.034	1.319	1.20	0.276	0.024	-0.143	0.65	0.003
Cm	9.991	8.912	45.834	236.99	44.324	10.066	8.907	240.22	9.938
Correct Avg	11.331	8.704	0.229	78.91	12.870	9.732	9.709	51.65	0.135

System Bias Check End

Test Run 4 STRATA Version 3.2

	O2-Out	CO2-O	SO2-O	NOx-O	CO-O	O2-In	CO2-In	SO2-In	THC-O
	%	%	ppm	ppm	ppm	%	%	ppm	ppm
Begin calculating run averages									
08-27-2013 11:05:01	11.514	8.482	2.398	74.88	9.865	9.772	9.512	62.72	0.214
08-27-2013 11:06:01	11.638	8.418	2.056	55.91	9.394	10.026	9.322	68.70	0.207
08-27-2013 11:07:01	12.231	8.258	1.860	45.62	11.606	10.713	8.723	67.95	0.206
08-27-2013 11:08:01	11.869	8.207	1.710	57.56	13.822	9.998	9.433	76.32	0.203
08-27-2013 11:09:01	11.719	8.392	1.668	74.06	13.548	10.035	9.344	74.60	0.210
08-27-2013 11:10:01	11.892	8.335	1.613	68.05	9.730	10.317	9.056	75.27	0.200
08-27-2013 11:11:01	12.023	8.235	1.534	60.39	10.783	10.353	9.078	73.66	0.198
08-27-2013 11:12:01	11.694	8.339	1.442	73.44	14.785	10.223	9.178	75.97	0.190
08-27-2013 11:13:01	11.730	8.382	1.505	77.15	11.957	10.281	9.080	80.06	0.184
08-27-2013 11:14:01	11.771	8.334	1.501	64.91	10.633	10.340	8.992	69.55	0.179
08-27-2013 11:15:01	11.997	8.285	1.528	58.71	11.626	10.794	8.599	58.64	0.182
08-27-2013 11:16:01	11.286	8.269	1.523	86.23	13.799	9.131	10.271	62.25	0.175
08-27-2013 11:17:01	10.990	8.781	1.469	115.72	11.998	9.787	9.409	47.80	0.183
08-27-2013 11:18:01	11.898	8.356	1.576	81.98	8.292	10.638	8.637	38.65	0.178
08-27-2013 11:19:01	12.870	8.064	1.512	41.20	9.825	11.843	7.581	33.49	0.196
08-27-2013 11:20:01	12.906	7.808	1.512	43.42	14.626	11.349	8.173	32.32	0.188
08-27-2013 11:21:01	12.091	8.094	1.458	75.28	15.908	10.552	8.863	35.44	0.183
08-27-2013 11:22:01	12.891	8.243	1.359	80.96	16.186	11.060	8.288	32.04	0.283
08-27-2013 11:23:01	14.456	6.719	1.389	48.50	11.651	10.833	8.700	31.66	0.346
08-27-2013 11:24:01	14.092	7.102	1.421	45.34	14.434	11.314	8.025	32.37	0.343
08-27-2013 11:25:01	14.668	6.502	1.407	49.35	14.721	12.622	6.944	22.99	0.324
08-27-2013 11:26:01	13.561	6.788	1.419	69.71	20.549	11.764	7.865	22.69	0.214
08-27-2013 11:27:01	11.871	8.096	1.409	87.96	26.224	10.280	9.169	28.99	0.169
08-27-2013 11:28:01	11.030	8.530	1.372	100.37	20.068	9.710	9.566	35.82	0.135
Run Averages	O2-Out	CO2-O	SO2-O	NOx-O	CO-O	O2-In	CO2-In	SO2-In	THC-O
	%	%	ppm	ppm	ppm	%	%	ppm	ppm
08-27-2013 11:28:02	12.279	8.042	1.568	68.20	13.585	10.572	8.825	51.67	0.212

Operator: Phil Juneau
Plant Name: Covanta Huntington RRF
Location: Unit 1
Test Run 4 End

Final System Bias Check, Run 4 STRATA Version 3.2
Operator: Phil Juneau
Plant Name: Covanta Huntington RRF
Location: Unit 1

Reference Cylinder Numbers

	Zero	Span
O2-Out		CC421867
CO2-O		CC421867
SO2-O		CC326338
NOx-O		SG9152406BAL
CO-O		CC177291
O2-In		CC421867
CO2-In		CC421867
SO2-In		CC33466
THC-O		CC432372

Date/Time 08-27-2013 11:38:07 PASSED

Analyte	O2-Out	CO2-O	SO2-O	NOx-O	CO-O	O2-In	CO2-In	SO2-In	THC-O
Units	%	%	ppm	ppm	ppm	%	%	ppm	ppm
Zero Ref Cyl	0.000	0.000	0.000	0.00	0.000	0.000	0.000	0.00	0.000
Zero Cal	-0.012	-0.033	-0.056	-0.08	0.228	0.005	-0.006	0.38	0.023
Zero Avg	-0.016	-0.036	1.420	1.26	0.217	0.024	-0.143	0.48	-0.004
Zero Bias%	0.0%	0.0%	1.6%	0.3%	0.0%	0.1%	0.8%	0.0%	0.1%
Zero Drift%	0.0%	0.0%	0.1%	0.0%	-0.1%	0.0%	0.0%	0.0%	-0.1%
Span Ref Cyl	10.070	9.094	47.160	234.70	45.070	10.070	9.094	244.70	9.944
Span Cal	10.087	8.951	48.131	240.41	45.015	10.095	9.056	246.53	9.997
Span Avg	9.992	8.905	45.891	235.52	44.264	10.073	8.917	240.86	9.923
Span Bias%	0.4%	0.3%	2.4%	1.0%	0.8%	0.1%	0.8%	1.2%	0.2%
Span Drift%	0.0%	0.0%	-0.1%	-0.3%	-0.1%	0.0%	0.1%	0.1%	0.1%
Ini Zero Avg	-0.014	-0.038	1.311	1.27	0.286	0.027	-0,143	0.36	0.031
Ini Span Avg	9.990	8.904	45.950	236.77	44.313	10.069	8.903	240.19	9.899
Run Avg	12.279	8.042	1.568	68.20	13.585	10.572	8.825	51.67	0.212
Co	-0.015	-0.037	1.365	1.26	0.251	0.025	-0.143	0.42	0.013
Cm	9.991	8.904	45.920	236.14	44.289	10.071	8.910	240.52	9.911
Correct Avg	12.372	8.217	0.215	66.88	13.646	10.573	9.009	52.23	0.200

System Bias Check End

Test Run 5 STRATA Version 3.2

	O2-Out	CO2-O	SO2-O	NOx-O	CO-O	O2-In	CO2-In	SO2-In	THC-O
	%	%	ppm	ppm	ppm	%	%	ppm	ppm
Begin calculating run averages									
08-27-2013 11:44:01	10.314	8.811	2.284	102.34	10.100	8.989	10.221	44.26	0.329
08-27-2013 11:45:01	10.199	8.923	1.964	122.70	8.951	8.870	10.333	44.62	0.444
08-27-2013 11:46:01	10.577	8.892	1.784	95.90	8.450	9.397	9.899	42.08	0.497
08-27-2013 11:47:01	10.375	8.860	1.748	93.24	8.576	9.190	10.022	43.03	0.486
08-27-2013 11:48:01	10.856	8.762	1.685	80.37	7.742	9.677	9.645	37.82	0.601
08-27-2013 11:49:01	10.244	8.815	1.621	108.69	8.258	8.874	10.291	41.20	1.168
08-27-2013 11:50:01	10.929	8.832	1.595	75.27	7.002	10.057	9.240	33.46	0.243
08-27-2013 11:51:01	11.035	8.554	1.518	50.63	7.915	9.772	9.543	39.20	0.194
08-27-2013 11:52:01	10.568	8.724	1.529	84.26	10.944	9.254	10.022	42.75	0.229
08-27-2013 11:53:01	10.524	8.887	1.509	99.39	9.282	9.479	9.769	40.36	0.216
08-27-2013 11:54:01	11.149	8.635	1.406	58.15	6.913	10.085	9.245	38.37	0.171
08-27-2013 11:55:01	10.767	8.619	1.481	76.48	8.069	9.483	9.766	40.17	0.145
08-27-2013 11:56:01	11.318	8.661	1.499	72.43	7.058	10.323	8.982	35.52	0.156
08-27-2013 11:57:01	11.520	8.382	1.444	50.77	7.825	10.190	9.207	35.89	0.131
08-27-2013 11:58:01	11.013	8.569	1.414	81.35	13.050	9.715	9.636	37.70	0.386
08-27-2013 11:59:01	10.782	8.693	1.415	107.21	12.131	9.556	9.766	37.10	0.748
08-27-2013 12:00:01	11.542	8.638	1.436	81.73	11.743	9.767	9.607	38.60	0.894
08-27-2013 12:01:01	11.692	8.248	1.441	75.93	10.200	9.719	9.605	41.29	1.010
08-27-2013 12:02:01	10.461	8.717	1.465	90.71	10.691	9.254	10.021	49.58	0.999
08-27-2013 12:03:01	10.788	8.795	1.455	86.29	10.671	9.783	9.528	53.75	0.892
08-27-2013 12:04:01	11.019	8.652	1.397	62.03	14.549	9.994	9.357	52.14	0.744
08-27-2013 12:05:01	10.605	8.684	1.388	66.37	18.862	9.355	9.906	55.01	0.574
08-27-2013 12:06:01	10.402	8.846	1.378	95.91	15.518	9.211	10.029	57.14	0.455
08-27-2013 12:07:01	10.500	8.879	1.412	85.84	11.783	9.475	9.781	62.34	0.349
Run Averages	O2-Out	CO2-O	SO2-O	NOx-O	CO-O	O2-In	CO2-In	SO2-In	THC-O
	%	%	ppm	ppm	ppm	%	%	ppm	ppm
08-27-2013 12:07:01	10.799	8.712	1.553	83.50	10.262	9.561	9.726	43.47	0.503

Operator: Phil Juneau
Plant Name: Covanta Huntington RRF
Location: Unit 1
Test Run 5 End

Final System Bias Check, Run 5 STRATA Version 3.2
Operator: Phil Juneau
Plant Name: Covanta Huntington RRF
Location: Unit 1

Reference Cylinder Numbers

	Zero	Span
O2-Out		CC421867
CO2-O		CC421867
SO2-O		CC326338
NOx-O		SG9152406BAL
CO-O		CC177291
O2-In		CC421867
CO2-In		CC421867
SO2-In		CC33466
THC-O		CC432372

Date/Time 08-27-2013 12:16:44 PASSED

Analyte	O2-Out	CO2-O	SO2-O	NOx-O	CO-O	O2-In	CO2-In	SO2-In	THC-O
Units	%	%	ppm	ppm	ppm	%	%	ppm	ppm
Zero Ref Cyl	0.000	0.000	0.000	0.00	0.000	0.000	0.000	0.00	0.000
Zero Cal	-0.012	-0.033	-0.056	-0.08	0.228	0.005	-0.006	0.38	0.023
Zero Avg	-0.023	-0.038	1.362	1.23	0.160	0.025	-0.143	0.37	0.052
Zero Bias%	0.1%	0.0%	1.5%	0.3%	0.1%	0.1%	0.8%	0.0%	0.1%
Zero Drift%	0.0%	0.0%	-0.1%	0.0%	-0.1%	0.0%	0.0%	0.0%	0.2%
Span Ref Cyl	10.070	9.094	47.160	234.70	45.070	10.070	9.094	244.70	9.944
Span Cal	10.087	8.951	48.131	240.41	45.015	10.095	9.056	246.53	9.997
Span Avg	9.984	8.896	46.053	236.02	44.226	10.070	8.916	241.35	9.860
Span Bias%	0.5%	0.3%	2.3%	0.9%	0.9%	0.1%	0.8%	1.1%	0.5%
Span Drift%	0.0%	0.0%	0.2%	0.1%	0.0%	0.0%	0.0%	0.1%	-0.2%
Ini Zero Avg	-0.016	-0.036	1.420	1.26	0.217	0.024	-0.143	0.48	-0.004
Ini Span Avg	9.992	8.905	45.891	235.52	44.264	10.073	8.917	240.86	9.923
Run Avg	10.799	8.712	1.553	83.50	10.262	9.561	9.726	43.47	0.503
Co	-0.020	-0.037	1.391	1.24	0.189	0.025	-0.143	0.42	0.024
Cm	9.988	8.901	45.972	235.77	44.245	10.071	8.917	241.11	9.891
Correct Avg	10.886	8.901	0.171	82.32	10.305	9.559	9.906	43.77	0.483

System Bias Check End

Test Run 6 STRATA Version 3.2

	O2-Out %	CO2-O %	SO2-O ppm	NOx-O ppm	CO-O ppm	O2-In %	CO2-In %	SO2-In ppm	THC-O ppm
Begin calculating run averages									
08-27-2013 12:22:03	12.237	8.163	2.870	68.44	12.163	9.738	9.672	55.66	0.297
08-27-2013 12:23:03	11.916	8.282	2.390	67.81	17.289	9.253	10.044	53.09	0.281
08-27-2013 12:24:03	12.070	8.245	2.116	72.35	17.605	9.447	9.881	45.02	0.279
08-27-2013 12:25:03	11.959	8.249	1.912	69.31	17.186	9.453	9.855	43.65	0.264
08-27-2013 12:26:03	12.273	8.195	1.840	65.65	17.167	9.683	9.661	42.98	0.274
08-27-2013 12:27:03	12.323	8.112	1.727	66.00	16.847	9.610	9.725	40.71	0.285
08-27-2013 12:28:03	11.662	8.245	1.653	72.08	18.110	8.958	10.283	43.51	0.230
08-27-2013 12:29:03	11.570	8.425	1.642	76.68	15.859	9.104	10.180	39.40	0.222
08-27-2013 12:30:03	11.447	8.469	1.508	82.26	14.958	9.021	10.226	39.72	0.217
08-27-2013 12:31:03	11.374	8.451	1.581	84.80	14.201	9.066	10.173	38.58	0.195
08-27-2013 12:32:03	11.288	8.509	1.467	91.62	11.704	8.941	10.237	41.17	0.195
08-27-2013 12:33:03	11.480	8.425	1.543	86.66	8.845	9.068	10.116	42.78	0.415
08-27-2013 12:34:03	11.556	8.442	1.476	80.49	9.233	9.282	9.957	43.93	0.053
08-27-2013 12:35:03	11.737	8.346	1.552	75.83	10.807	9.566	9.711	42.28	0.057
08-27-2013 12:36:03	11.464	8.383	1.501	76.39	12.890	9.159	10.097	43.07	0.146
08-27-2013 12:37:03	11.564	8.429	1.470	93.22	11.007	9.104	10.118	43.42	0.183
08-27-2013 12:38:03	11.344	8.494	1.434	94.26	8.272	9.083	10.052	47.78	0.176
08-27-2013 12:39:03	11.794	8.328	1.390	72.19	8.140	9.628	9.612	45.81	0.165
08-27-2013 12:40:03	11.603	8.342	1.500	77.83	8.924	9.179	10.025	54.64	0.170
08-27-2013 12:41:03	11.729	8.375	1.483	71.95	7.981	9.426	9.809	54.43	0.165
08-27-2013 12:42:03	11.776	8.347	1.436	72.27	8.669	9.533	9.714	51.48	0.167
08-27-2013 12:43:03	11.681	8.320	1.424	83.96	10.373	9.211	10.074	54.46	0.166
08-27-2013 12:44:03	11.461	8.432	1.424	89.48	10.158	8.922	10.343	56.03	0.175
08-27-2013 12:45:03	11.819	8.357	1.511	86.25	9.795	9.327	9.959	52.07	0.186
Run Averages	O2-Out %	CO2-O %	SO2-O ppm	NOx-O ppm	CO-O ppm	O2-In %	CO2-In %	SO2-In ppm	THC-O ppm
08-27-2013 12:45:03	11.714	8.349	1.660	78.24	12.424	9.282	9.980	46.49	0.207

Operator: Phil Juneau
Plant Name: Covanta Huntington RRF
Location: Unit 1
Test Run 6 End

Final System Bias Check, Run 6 STRATA Version 3.2
Operator: Phil Juneau
Plant Name: Covanta Huntington RRF
Location: Unit 1

Reference Cylinder Numbers

	Zero	Span
O2-Out		CC421867
CO2-O		CC421867
SO2-O		CC326338
NOx-O		SG9152406BAL
CO-O		CC177291
O2-In		CC421867
CO2-In		CC421867
SO2-In		CC33466
THC-O		CC432372

Date/Time 08-27-2013 12:57:18 PASSED

Analyte	O2-Out	CO2-O	SO2-O	NOx-O	CO-O	O2-In	CO2-In	SO2-In	THC-O
Units	%	%	ppm	ppm	ppm	%	%	ppm	ppm
Zero Ref Cyl	0.000	0.000	0.000	0.00	0.000	0.000	0.000	0.00	0.000
Zero Cal	-0.012	-0.033	-0.056	-0.08	0.228	0.005	-0.006	0.38	0.023
Zero Avg	-0.020	-0.034	1.469	0.94	0.160	0.024	-0.137	0.10	0.070
Zero Bias%	0.0%	0.0%	1.7%	0.2%	0.1%	0.1%	0.7%	0.1%	0.2%
Zero Drift%	0.0%	0.0%	0.1%	-0.1%	0.0%	0.0%	0.0%	-0.1%	0.1%
Span Ref Cyl	10.070	9.094	47.160	234.70	45.070	10.070	9.094	244.70	9.944
Span Cal	10.087	8.951	48.131	240.41	45.015	10.095	9.056	246.53	9.997
Span Avg	9.997	8.905	46.154	236.04	44.348	10.075	8.910	240.35	10.004
Span Bias%	0.4%	0.3%	2.2%	0.9%	0.7%	0.1%	0.8%	1.3%	0.0%
Span Drift%	0.1%	0.0%	0.1%	0.0%	0.1%	0.0%	0.0%	-0.2%	0.5%
Ini Zero Avg	-0.023	-0.038	1.362	1.23	0.160	0.025	-0.143	0.37	0.052
Ini Span Avg	9.984	8.896	46.053	236.02	44.226	10.070	8.916	241.35	9.860
Run Avg	11.714	8.349	1.660	78.24	12.424	9.282	9.980	46.49	0.207
Co	-0.021	-0.036	1.415	1.09	0.160	0.025	-0.140	0.24	0.061
Cm	9.991	8.901	46.103	236.03	44.287	10.073	8.913	240.85	9.932
Correct Avg	11.803	8.532	0.259	77.07	12.526	9.277	10.166	47.04	0.147

System Bias Check End

Test Run 7 STRATA Version 3.2

	O2-Out %	CO2-O %	SO2-O ppm	NOx-O ppm	CO-O ppm	O2-In %	CO2-In %	SO2-In ppm	THC-O ppm
Begin calculating run averages									
08-27-2013 13:03:01	11.380	8.555	2.334	94.89	13.970	9.852	9.487	51.55	0.251
08-27-2013 13:04:01	11.658	8.404	2.066	111.61	12.004	9.794	9.599	58.42	0.267
08-27-2013 13:05:01	11.305	8.460	1.909	97.28	12.210	9.372	9.960	64.33	0.239
08-27-2013 13:06:01	11.501	8.544	1.728	69.13	12.472	9.921	9.448	57.37	0.232
08-27-2013 13:07:01	11.785	8.329	1.659	56.94	13.388	9.914	9.581	55.28	0.222
08-27-2013 13:08:01	11.262	8.545	1.637	92.32	16.597	9.530	9.772	52.64	0.234
08-27-2013 13:09:01	11.730	8.408	1.577	75.48	10.501	10.033	9.382	48.93	0.220
08-27-2013 13:10:01	11.568	8.427	1.542	68.11	10.919	9.809	9.586	48.05	0.219
08-27-2013 13:11:01	11.847	8.393	1.508	62.03	11.791	10.260	9.132	45.13	0.225
08-27-2013 13:12:01	12.010	8.285	1.525	61.95	12.051	10.386	9.048	44.13	0.227
08-27-2013 13:13:01	12.044	8.251	1.479	71.22	14.342	10.348	9.113	42.69	0.229
08-27-2013 13:14:01	12.057	8.292	1.417	92.53	15.920	10.103	9.322	43.92	0.253
08-27-2013 13:15:01	11.570	8.317	1.499	96.49	12.870	10.104	9.281	42.62	0.204
08-27-2013 13:16:01	11.748	8.432	1.357	58.38	14.215	10.615	8.832	40.47	0.191
08-27-2013 13:17:01	11.934	8.316	1.400	50.46	20.718	10.709	8.760	38.88	0.193
08-27-2013 13:18:01	11.735	8.311	1.392	69.52	19.252	10.340	9.156	39.85	0.187
08-27-2013 13:19:01	11.336	8.509	1.351	89.26	16.924	10.149	9.201	38.44	0.188
08-27-2013 13:20:01	11.750	8.366	1.410	77.64	14.139	10.441	8.957	33.19	0.197
08-27-2013 13:21:01	11.916	8.334	1.394	59.33	13.400	10.785	8.630	33.71	0.187
08-27-2013 13:22:01	11.892	8.249	1.342	60.86	16.029	10.487	8.979	34.89	0.176
08-27-2013 13:23:01	11.220	8.447	1.369	89.39	17.942	9.665	9.686	38.17	0.169
08-27-2013 13:24:01	10.814	8.653	1.420	102.77	13.205	9.379	9.925	41.13	0.151
08-27-2013 13:25:01	10.567	8.800	1.402	92.98	10.729	9.329	9.922	45.47	0.144
08-27-2013 13:26:01	11.309	8.671	1.358	75.51	10.311	10.452	8.867	40.78	0.337
Run Averages	O2-Out %	CO2-O %	SO2-O ppm	NOx-O ppm	CO-O ppm	O2-In %	CO2-In %	SO2-In ppm	THC-O ppm
08-27-2013 13:26:02	11.581	8.429	1.545	78.17	13.996	10.074	9.318	45.00	0.214

Operator: Phil Juneau
Plant Name: Covanta Huntington RRF
Location: Unit 1
Test Run 7 End

Final System Bias Check, Run 7 STRATA Version 3.2
Operator: Phil Juneau
Plant Name: Covanta Huntington RRF
Location: Unit 1

Reference Cylinder Numbers

	Zero	Span
O2-Out		CC421867
CO2-O		CC421867
SO2-O		CC326338
NOx-O		SG9152406BAL
CO-O		CC177291
O2-In		CC421867
CO2-In		CC421867
SO2-In		CC33466
THC-O		CC432372

Date/Time 08-27-2013 13:37:48 PASSED

Analyte	O2-Out	CO2-O	SO2-O	NOx-O	CO-O	O2-In	CO2-In	SO2-In	THC-O
Units	%	%	ppm	ppm	ppm	%	%	ppm	ppm
Zero Ref Cyl	0.000	0.000	0.000	0.00	0.000	0.000	0.000	0.00	0.000
Zero Cal	-0.012	-0.033	-0.056	-0.08	0.228	0.005	-0.006	0.38	0.023
Zero Avg	-0.020	-0.034	1.116	1.03	0.120	0.025	-0.130	0.84	0.019
Zero Bias%	0.0%	0.0%	1.3%	0.2%	0.1%	0.1%	0.7%	0.1%	0.0%
Zero Drift%	0.0%	0.0%	-0.4%	0.0%	0.0%	0.0%	0.0%	0.2%	-0.2%
Span Ref Cyl	10.070	9.094	47.160	234.70	45.070	10.070	9.094	244.70	9.944
Span Cal	10.087	8.951	48.131	240.41	45.015	10.095	9.056	246.53	9.997
Span Avg	9.982	8.886	45.833	235.49	44.219	10.070	8.929	240.63	9.977
Span Bias%	0.5%	0.4%	2.5%	1.0%	0.9%	0.1%	0.7%	1.2%	0.1%
Span Drift%	-0.1%	-0.1%	-0.3%	-0.1%	-0.1%	0.0%	0.1%	0.1%	-0.1%
Ini Zero Avg	-0.020	-0.034	1.469	0.94	0.160	0.024	-0.137	0.10	0.070
Ini Span Avg	9.997	8.905	46.154	236.04	44.348	10.075	8.910	240.35	10.004
Run Avg	11.581	8.429	1.545	78.17	13.996	10.074	9.318	45.00	0.214
Co	-0.020	-0.034	1.292	0.99	0.140	0.025	-0.134	0.47	0.044
Cm	9.990	8.896	45.994	235.76	44.283	10.073	8.919	240.49	9.991
Correct Avg	11.671	8.619	0.266	77.16	14.146	10.072	9.494	45.40	0.170

System Bias Check End

Test Run 8 STRATA Version 3.2

	O2-Out %	CO2-O %	SO2-O ppm	NOx-O ppm	CO-O ppm	O2-In %	CO2-In %	SO2-In ppm	THC-O ppm
Begin calculating run averages									
08-27-2013 13:49:04	10.653	8.768	1.466	88.65	14.118	9.664	9.556	54.09	0.095
08-27-2013 13:50:04	11.154	8.612	1.447	69.88	15.392	10.315	8.949	53.82	0.092
08-27-2013 13:51:04	11.645	8.387	1.326	56.34	19.756	10.690	8.690	47.64	0.098
08-27-2013 13:52:04	11.643	8.386	1.327	75.25	24.751	10.713	8.740	40.32	0.108
08-27-2013 13:53:04	11.203	8.436	1.279	105.47	26.514	9.862	9.610	42.62	0.107
08-27-2013 13:54:04	10.391	8.815	1.231	114.64	22.338	9.239	10.073	54.99	0.269
08-27-2013 13:55:04	10.399	8.882	1.283	96.54	19.004	9.326	10.002	58.25	2.952
08-27-2013 13:56:05	10.302	8.918	1.282	101.96	21.337	9.240	10.046	51.48	-0.053
08-27-2013 13:57:05	10.831	8.784	1.201	86.89	17.928	9.752	9.647	41.68	0.069
08-27-2013 13:58:05	10.642	8.734	1.200	77.35	19.740	9.382	10.018	41.47	0.067
08-27-2013 13:59:05	10.585	8.887	1.146	64.20	21.746	9.715	9.611	42.15	0.068
08-27-2013 14:00:05	10.993	8.658	1.202	58.92	19.592	9.883	9.542	40.08	0.078
08-27-2013 14:01:05	10.880	8.695	1.183	87.35	24.458	9.773	9.682	38.24	0.096
08-27-2013 14:02:05	11.086	8.677	1.104	92.39	20.279	10.085	9.390	35.00	0.102
08-27-2013 14:03:05	11.085	8.638	1.135	89.51	21.008	10.013	9.484	34.04	0.099
08-27-2013 14:04:05	10.967	8.677	1.164	98.87	24.536	9.854	9.640	34.85	0.104
08-27-2013 14:05:05	10.712	8.752	1.202	101.43	25.857	9.595	9.855	39.88	0.093
08-27-2013 14:06:05	10.928	8.762	1.057	87.26	25.552	9.932	9.514	38.51	0.097
08-27-2013 14:07:05	11.257	8.612	1.149	69.69	26.805	10.199	9.343	38.09	0.098
08-27-2013 14:08:05	10.865	8.688	1.128	80.59	32.410	9.679	9.848	37.51	0.092
08-27-2013 14:09:05	10.744	8.813	1.104	95.64	25.361	9.730	9.714	37.91	0.095
08-27-2013 14:10:05	10.406	8.821	1.073	104.98	21.985	9.103	10.337	44.04	0.090
08-27-2013 14:11:05	10.403	8.969	1.080	104.68	20.536	9.419	9.946	47.25	0.085
08-27-2013 14:12:05	10.548	8.852	1.154	89.43	17.733	9.422	9.931	45.93	0.074
Run Averages	O2-Out %	CO2-O %	SO2-O ppm	NOx-O ppm	CO-O ppm	O2-In %	CO2-In %	SO2-In ppm	THC-O ppm
08-27-2013 14:12:05	10.847	8.718	1.205	87.41	22.031	9.774	9.632	43.33	0.211

Operator: Phil Juneau
Plant Name: Covanta Huntington RRF
Location: Unit 1
Test Run 8 End

Final System Bias Check, Run 8 STRATA Version 3.2
Operator: Phil Juneau
Plant Name: Covanta Huntington RRF
Location: Unit 1

Reference Cylinder Numbers

	Zero	Span
O2-Out		CC421867
CO2-O		CC421867
SO2-O		CC326338
NOx-O		SG9152406BAL
CO-O		CC177291
O2-In		CC421867
CO2-In		CC421867
SO2-In		CC33466
THC-O		CC432372

Date/Time 08-27-2013 14:22:42 PASSED

Analyte	O2-Out	CO2-O	SO2-O	NOx-O	CO-O	O2-In	CO2-In	SO2-In	THC-O
Units	%	%	ppm	ppm	ppm	%	%	ppm	ppm
Zero Ref Cyl	0.000	0.000	0.000	0.00	0.000	0.000	0.000	0.00	0.000
Zero Cal	-0.012	-0.033	-0.056	-0.08	0.228	0.005	-0.006	0.38	0.023
Zero Avg	-0.020	-0.038	0.914	1.14	0.113	0.025	-0.130	0.06	-0.025
Zero Bias%	0.0%	0.0%	1.1%	0.3%	0.1%	0.1%	0.7%	0.1%	0.2%
Zero Drift%	0.0%	0.0%	-0.2%	0.0%	0.0%	0.0%	0.0%	-0.2%	-0.1%
Span Ref Cyl	10.070	9.094	47.160	234.70	45.070	10.070	9.094	244.70	9.944
Span Cal	10.087	8.951	48.131	240.41	45.015	10.095	9.056	246.53	9.997
Span Avg	9.977	8.879	45.212	236.34	44.215	10.066	8.916	240.84	9.838
Span Bias%	0.5%	0.4%	3.2%	0.8%	0.9%	0.1%	0.8%	1.2%	0.5%
Span Drift%	0.0%	0.0%	-0.7%	0.2%	0.0%	0.0%	-0.1%	0.0%	-0.5%
Ini Zero Avg	-0.020	-0.034	1.116	1.03	0.120	0.025	-0.130	0.84	0.019
Ini Span Avg	9.982	8.886	45.833	235.49	44.219	10.070	8.929	240.63	9.977
Run Avg	10.847	8.718	1.205	87.41	22.031	9.774	9.632	43.33	0.211
Co	-0.020	-0.036	1.015	1.09	0.117	0.025	-0.130	0.45	-0.003
Cm	9.979	8.883	45.523	235.92	44.217	10.068	8.922	240.74	9.907
Correct Avg	10.944	8.926	0.202	86.28	22.396	9.776	9.807	43.66	0.215

System Bias Check End

Test Run 9 STRATA Version 3.2

	O2-Out %	CO2-O %	SO2-O ppm	NOx-O ppm	CO-O ppm	O2-In %	CO2-In %	SO2-In ppm	THC-O ppm
Begin calculating run averages									
08-27-2013 14:28:03	11.110	8.773	2.234	87.02	15.308	10.221	9.232	59.10	0.118
08-27-2013 14:29:03	10.868	8.623	1.858	82.09	19.038	9.560	9.886	64.59	0.107
08-27-2013 14:30:03	10.698	8.826	1.564	95.92	16.470	9.564	9.838	66.61	0.105
08-27-2013 14:31:03	10.807	8.778	1.408	89.08	14.633	9.735	9.631	67.92	0.103
08-27-2013 14:32:03	10.886	8.696	1.332	84.46	16.967	9.509	9.803	72.66	0.115
08-27-2013 14:33:03	11.017	8.716	1.272	82.44	17.262	9.958	9.400	69.75	0.111
08-27-2013 14:34:03	10.987	8.619	1.237	78.45	20.500	9.673	9.688	70.68	0.101
08-27-2013 14:35:03	10.703	8.719	1.111	85.44	16.066	9.361	9.939	71.00	0.092
08-27-2013 14:36:03	10.703	8.779	1.133	95.46	13.688	9.317	9.952	68.55	0.093
08-27-2013 14:37:03	10.889	8.737	1.076	90.94	11.602	9.602	9.636	64.11	0.098
08-27-2013 14:38:03	10.792	8.646	1.086	76.16	10.960	9.318	9.876	59.89	0.085
08-27-2013 14:39:03	10.854	8.716	1.122	80.59	9.301	9.615	9.583	56.43	0.094
08-27-2013 14:40:03	11.316	8.516	0.949	76.25	10.024	9.959	9.328	49.80	0.097
08-27-2013 14:41:03	10.849	8.597	1.067	88.73	11.484	9.449	9.702	51.13	0.094
08-27-2013 14:42:03	11.002	8.612	1.018	92.00	7.516	9.587	9.613	51.74	0.093
08-27-2013 14:43:03	10.761	8.672	1.068	84.98	6.445	9.491	9.657	53.32	0.083
08-27-2013 14:44:03	10.957	8.615	1.059	77.19	6.703	9.618	9.585	51.80	0.081
08-27-2013 14:45:03	10.864	8.639	1.014	89.90	6.894	9.507	9.700	52.31	0.084
08-27-2013 14:46:03	10.658	8.713	1.014	95.85	6.444	9.494	9.632	55.57	0.080
08-27-2013 14:47:03	10.876	8.684	0.944	83.68	5.474	9.841	9.305	50.19	0.071
08-27-2013 14:48:03	11.035	8.539	1.032	71.11	6.929	9.816	9.417	48.24	0.060
08-27-2013 14:49:03	10.752	8.688	1.095	88.56	6.979	9.664	9.509	46.62	0.066
08-27-2013 14:50:03	10.753	8.674	0.993	96.57	5.400	9.661	9.486	45.69	0.073
08-27-2013 14:51:03	10.446	8.738	1.026	96.65	6.172	9.138	9.952	49.61	0.063
Run Averages	O2-Out %	CO2-O %	SO2-O ppm	NOx-O ppm	CO-O ppm	O2-In %	CO2-In %	SO2-In ppm	THC-O ppm
08-27-2013 14:51:03	10.858	8.680	1.196	86.23	11.177	9.611	9.640	58.22	0.090

Operator: Phil Juneau
Plant Name: Covanta Huntington RRF
Location: Unit 1
Test Run 9 End

Final System Bias Check, Run 9 STRATA Version 3.2
Operator: Phil Juneau
Plant Name: Covanta Huntington RRF
Location: Unit 1

Reference Cylinder Numbers

	Zero	Span
O2-Out		CC421867
CO2-O		CC421867
SO2-O		CC326338
NOx-O		SG9152406BAL
CO-O		CC177291
O2-In		CC421867
CO2-In		CC421867
SO2-In		CC33466
THC-O		CC432372

Date/Time 08-27-2013 14:59:59 PASSED

Analyte	O2-Out	CO2-O	SO2-O	NOx-O	CO-O	O2-In	CO2-In	SO2-In	THC-O
Units	%	%	ppm	ppm	ppm	%	%	ppm	ppm
Zero Ref Cyl	0.000	0.000	0.000	0.00	0.000	0.000	0.000	0.00	0.000
Zero Cal	-0.012	-0.033	-0.056	-0.08	0.228	0.005	-0.006	0.38	0.023
Zero Avg	-0.020	-0.035	0.969	1.13	0.115	0.027	-0.150	0.30	0.022
Zero Bias%	0.0%	0.0%	1.1%	0.2%	0.1%	0.1%	0.8%	0.0%	0.0%
Zero Drift%	0.0%	0.0%	0.1%	0.0%	0.0%	0.0%	-0.1%	0.0%	0.2%
Span Ref Cyl	10.070	9.094	47.160	234.70	45.070	10.070	9.094	244.70	9.944
Span Cal	10.087	8.951	48.131	240.41	45.015	10.095	9.056	246.53	9.997
Span Avg	9.977	8.911	45.093	235.91	44.090	10.071	8.878	240.60	9.858
Span Bias%	0.5%	0.2%	3.3%	0.9%	1.0%	0.1%	1.0%	1.2%	0.5%
Span Drift%	0.0%	0.2%	-0.1%	-0.1%	-0.1%	0.0%	-0.2%	0.0%	0.1%
Ini Zero Avg	-0.020	-0.038	0.914	1.14	0.113	0.025	-0.130	0.06	-0.025
Ini Span Avg	9.977	8.879	45.212	236.34	44.215	10.066	8.916	240.84	9.838
Run Avg	10.858	8.680	1.196	86.23	11.177	9.611	9.640	58.22	0.090
Co	-0.020	-0.036	0.942	1.13	0.114	0.026	-0.140	0.18	-0.001
Cm	9.977	8.895	45.153	236.13	44.153	10.069	8.897	240.72	9.848
Correct Avg	10.958	8.875	0.272	84.99	11.322	9.611	9.841	59.05	0.092

System Bias Check End

Test Run 10 STRATA Version 3.2

	O2-Out %	CO2-O %	SO2-O ppm	NOx-O ppm	CO-O ppm	O2-In %	CO2-In %	SO2-In ppm	THC-O ppm
Begin calculating run averages									
08-27-2013 15:19:02	11.461	8.561	0.950	75.78	13.422	10.581	8.864	38.56	0.207
08-27-2013 15:20:02	11.849	8.396	0.910	60.25	14.106	10.846	8.670	39.57	0.208
08-27-2013 15:21:02	11.638	8.415	0.938	62.73	17.604	10.682	8.815	44.23	18.137*
08-27-2013 15:22:02	10.679	8.474	0.913	78.12	19.858	8.464	11.149	52.51	4.228*
08-27-2013 15:23:02	7.997	10.651	0.875	139.28	20.518	6.681	12.073	92.58	1.102
08-27-2013 15:24:03	9.959	9.976	0.918	139.44	7.739	9.272	9.957	54.44	0.786
08-27-2013 15:25:03	11.167	8.714	0.877	78.77	6.873	10.240	9.157	54.12	0.037
08-27-2013 15:26:03	11.637	8.474	0.794	46.88	11.904	10.723	8.738	57.28	0.089
08-27-2013 15:27:03	12.022	8.339	0.895	53.07	15.581	11.162	8.298	59.07	0.103
08-27-2013 15:28:03	11.969	8.238	0.920	68.96	16.483	10.831	8.670	63.66	0.112
08-27-2013 15:29:03	11.842	8.373	0.876	69.63	19.573	11.095	8.339	63.93	3.230*
08-27-2013 15:30:03	11.995	8.234	0.843	65.71	24.649	10.762	8.823	60.26	0.086
08-27-2013 15:31:03	11.171	8.542	0.847	85.61	25.793	10.128	9.319	69.69	0.132
08-27-2013 15:32:03	11.279	8.580	0.864	99.55	24.734	10.143	9.334	70.64	0.158
08-27-2013 15:33:03	11.252	8.595	0.801	94.99	21.760	10.187	9.235	71.16	0.160
08-27-2013 15:34:03	11.440	8.548	0.890	72.25	21.824	10.392	9.107	69.87	0.154
08-27-2013 15:35:03	10.693	8.661	0.843	92.33	20.087	9.377	9.971	80.14	11.549*
08-27-2013 15:36:03	10.335	8.894	0.843	103.79	17.397	9.126	10.164	85.62	0.225
08-27-2013 15:37:03	10.690	8.871	0.836	87.74	18.609	9.601	9.804	79.79	0.104
08-27-2013 15:38:03	10.632	8.809	0.827	86.42	22.335	9.423	9.965	78.79	0.143
08-27-2013 15:39:03	10.801	8.827	0.788	96.93	17.116	9.818	9.550	73.00	0.182
08-27-2013 15:40:03	10.887	8.659	0.846	88.26	17.143	9.612	9.833	74.36	0.184
08-27-2013 15:41:03	10.605	8.857	0.762	92.06	20.361	9.610	9.726	76.15	0.185
08-27-2013 15:42:03	11.123	8.663	0.804	95.80	19.275	10.039	9.373	71.31	15.206*
Run Averages	O2-Out %	CO2-O %	SO2-O ppm	NOx-O ppm	CO-O ppm	O2-In %	CO2-In %	SO2-In ppm	THC-O ppm
08-27-2013 15:42:03	11.047	8.723	0.861	84.76	18.114	9.950	9.456	65.86	2.363*

Operator: Phil Juneau
Plant Name: Covanta Huntington RRF
Location: Unit 1
Test Run 10 End

Final System Bias Check, Run 10 STRATA Version 3.2
Operator: Phil Juneau
Plant Name: Covanta Huntington RRF
Location: Unit 1

Reference Cylinder Numbers

	Zero	Span
O2-Out		CC421867
CO2-O		CC421867
SO2-O		CC326338
NOx-O		SG9152406BAL
CO-O		CC177291
O2-In		CC421867
CO2-In		CC421867
SO2-In		CC33466
THC-O		CC432372

Date/Time 08-27-2013 15:51:44 PASSED

Analyte	O2-Out	CO2-O	SO2-O	NOx-O	CO-O	O2-In	CO2-In	SO2-In	THC-O
Units	%	%	ppm	ppm	ppm	%	%	ppm	ppm
Zero Ref Cyl	0.000	0.000	0.000	0.00	0.000	0.000	0.000	0.00	0.000
Zero Cal	-0.012	-0.033	-0.056	-0.08	0.228	0.005	-0.006	0.38	0.023
Zero Avg	-0.020	-0.035	0.781	1.12	0.197	0.024	-0.143	0.06	0.097
Zero Bias%	0.0%	0.0%	0.9%	0.2%	0.0%	0.1%	0.8%	0.1%	0.2%
Zero Drift%	0.0%	0.0%	-0.2%	0.0%	0.1%	0.0%	0.0%	0.0%	0.2%
Span Ref Cyl	10.070	9.094	47.160	234.70	45.070	10.070	9.094	244.70	9.944
Span Cal	10.087	8.951	48.131	240.41	45.015	10.095	9.056	246.53	9.997
Span Avg	9.977	8.907	45.071	235.90	44.364	10.068	8.884	241.10	9.903
Span Bias%	0.5%	0.2%	3.3%	0.9%	0.7%	0.1%	1.0%	1.1%	0.3%
Span Drift%	0.0%	0.0%	0.0%	0.0%	0.3%	0.0%	0.0%	0.1%	0.1%
Ini Zero Avg	-0.020	-0.035	0.969	1.13	0.115	0.027	-0.150	0.30	0.022
Ini Span Avg	9.977	8.911	45.093	235.91	44.090	10.071	8.878	240.60	9.858
Run Avg	11.047	8.723	0.861	84.76	18.114	9.950	9.456	65.86	2.363
Co	-0.020	-0.035	0.875	1.12	0.156	0.025	-0.146	0.18	0.060
Cm	9.977	8.909	45.082	235.90	44.227	10.070	8.881	240.85	9.881
Correct Avg	11.148	8.904	-0.015	83.61	18.365	9.950	9.673	66.78	2.332

System Bias Check End

Test Run 11 STRATA Version 3.2

	O2-Out %	CO2-O %	SO2-O ppm	NOx-O ppm	CO-O ppm	O2-In %	CO2-In %	SO2-In ppm	THC-O ppm
Begin calculating run averages									
08-27-2013 15:58:06	11.411	8.384	2.686	64.44	22.491	9.870	9.562	41.97	3.125*
08-27-2013 15:59:06	10.796	8.698	1.949	81.12	22.531	9.454	9.894	47.25	7.286*
08-27-2013 16:00:06	10.236	8.828	1.531	101.43	17.622	8.649	10.571	50.78	0.100
08-27-2013 16:01:06	10.265	9.042	1.281	103.29	13.986	9.031	10.191	50.15	0.195
08-27-2013 16:02:06	10.417	8.870	1.096	99.15	11.889	9.040	10.205	48.44	0.188
08-27-2013 16:03:06	10.422	8.885	1.031	89.65	15.318	9.297	9.999	44.49	0.186
08-27-2013 16:04:06	10.337	8.900	1.011	91.67	15.228	9.268	10.024	45.69	0.178
08-27-2013 16:05:06	10.493	8.853	0.929	86.32	14.183	9.256	10.059	40.06	0.169
08-27-2013 16:06:06	10.348	8.938	0.892	93.96	11.764	9.324	9.927	40.69	1.918*
08-27-2013 16:07:06	10.523	8.821	0.883	98.69	10.719	9.389	9.880	40.05	6.193*
08-27-2013 16:08:06	10.860	8.789	0.849	81.98	10.791	9.959	9.339	38.88	0.081
08-27-2013 16:09:06	11.526	8.537	0.789	54.01	12.573	10.686	8.679	37.09	0.164
08-27-2013 16:10:06	11.966	8.305	0.742	50.03	15.873	11.056	8.345	36.31	0.210
08-27-2013 16:11:06	12.287	8.199	0.754	51.13	17.757	11.424	7.919	26.57	0.208
08-27-2013 16:12:06	12.485	8.080	0.759	55.13	19.713	11.620	7.744	29.94	0.221
08-27-2013 16:13:06	12.814	7.984	0.839	57.48	22.837	11.892	7.704	30.86	0.238
08-27-2013 16:14:06	11.633	8.171	0.766	89.29	32.811	10.175	9.278	37.16	0.209
08-27-2013 16:15:06	10.566	8.697	0.757	113.67	29.490	9.219	10.091	43.67	0.192
08-27-2013 16:16:06	10.243	8.943	0.717	116.50	19.079	9.092	10.152	43.98	0.178
08-27-2013 16:17:06	10.411	8.886	0.774	96.11	13.141	9.240	10.048	44.11	0.179
08-27-2013 16:18:06	10.410	8.875	0.807	81.91	14.441	9.174	10.122	46.26	0.152
08-27-2013 16:19:06	10.440	8.905	0.792	89.29	12.998	9.333	9.986	44.39	0.153
08-27-2013 16:20:06	10.540	8.840	0.789	109.54	13.835	9.429	9.901	40.97	0.160
08-27-2013 16:21:06	10.640	8.800	0.747	106.57	14.332	9.556	9.771	38.12	6.685*
Run Averages	O2-Out %	CO2-O %	SO2-O ppm	NOx-O ppm	CO-O ppm	O2-In %	CO2-In %	SO2-In ppm	THC-O ppm
08-27-2013 16:21:06	10.920	8.676	1.007	85.93	16.892	9.768	9.558	41.16	1.190*

Operator: Phil Juneau
Plant Name: Covanta Huntington RRF
Location: Unit 1
Test Run 11 End

Final System Bias Check, Run 11 STRATA Version 3.2
Operator: Phil Juneau
Plant Name: Covanta Huntington RRF
Location: Unit 1

Reference Cylinder Numbers

	Zero	Span
O2-Out		CC421867
CO2-O		CC421867
SO2-O		CC326338
NOx-O		SG9152406BAL
CO-O		CC177291
O2-In		CC421867
CO2-In		CC421867
SO2-In		CC33466
THC-O		CC432372

Date/Time 08-27-2013 16:31:23 PASSED

Analyte	O2-Out	CO2-O	SO2-O	NOx-O	CO-O	O2-In	CO2-In	SO2-In	THC-O
Units	%	%	ppm	ppm	ppm	%	%	ppm	ppm
Zero Ref Cyl	0.000	0.000	0.000	0.00	0.000	0.000	0.000	0.00	0.000
Zero Cal	-0.012	-0.033	-0.056	-0.08	0.228	0.005	-0.006	0.38	0.023
Zero Avg	-0.020	-0.035	0.644	1.05	0.193	0.019	-0.060	0.89	-0.069
Zero Bias%	0.0%	0.0%	0.8%	0.2%	0.0%	0.1%	0.3%	0.1%	0.3%
Zero Drift%	0.0%	0.0%	-0.1%	0.0%	0.0%	0.0%	0.5%	0.2%	-0.6%
Span Ref Cyl	10.070	9.094	47.160	234.70	45.070	10.070	9.094	244.70	9.944
Span Cal	10.087	8.951	48.131	240.41	45.015	10.095	9.056	246.53	9.997
Span Avg	9.979	8.911	44.991	235.83	44.263	9.999	8.954	231.72	9.656
Span Bias%	0.5%	0.2%	3.4%	0.9%	0.8%	0.4%	0.6%	3.0%	1.1%
Span Drift%	0.0%	0.0%	-0.1%	0.0%	-0.1%	-0.3%	0.4%	-1.9%	-0.8%
Ini Zero Avg	-0.020	-0.035	0.781	1.12	0.197	0.024	-0.143	0.06	0.097
Ini Span Avg	9.977	8.907	45.071	235.90	44.364	10.068	8.884	241.10	9.903
Run Avg	10.920	8.676	1.007	85.93	16.892	9.768	9.558	41.16	1.190
Co	-0.020	-0.035	0.712	1.09	0.195	0.021	-0.102	0.48	0.014
Cm	9.978	8.909	45.031	235.86	44.313	10.034	8.919	236.41	9.779
Correct Avg	11.019	8.857	0.314	84.82	17.057	9.803	9.738	42.20	1.198

System Bias Check End

Calibration Error Test, Run 1 STRATA Version 3.2
Operator: Phil Juneau
Plant Name: Covanta Huntington RRF
Location: Unit 2

Reference Cylinder Numbers

	Zero	Low-range	Mid-range	High-range
O2-Out		CC427661	CC421867	CC175833
CO2-O		CC427661	CC421867	CC175833
SO2-O		CC39675	CC326338	FF4708
NOx-O		CC323813	SG9152406BAL	CC120144
CO-O		CC36020	CC177291	FF35824
O2-In		CC427661	CC421867	CC175833
CO2-In		CC427661	CC421867	CC175833
SO2-In		CC283725	CC33466	CC220121
THC-O		CC432372	FF27519	FF14840

Date/Time 08-28-2013 07:52:52 PASSED

Analyte	O2-Out	CO2-O	SO2-O	NOx-O	CO-O	O2-In	CO2-In	SO2-In	THC-O
Units	%	%	ppm	ppm	ppm	%	%	ppm	ppm
Zero Ref Cyl	0.000	0.000	0.000	0.00	0.000	0.000	0.000	0.00	0.000
Zero Avg	-0.028	-0.035	-0.110	-0.21	0.211	0.016	0.003	0.45	-0.002
Zero Error%	0.1%	0.2%	0.1%	0.0%	0.2%	0.1%	0.0%	0.1%	0.0%
Low Ref Cyl									9.944
Low Avg									10.144
Low Error%									0.7%
Mid Ref Cyl	10.070	9.094	47.160	234.70	45.070	10.070	9.094	244.70	15.030
Mid Avg	10.079	8.959	48.344	232.92	45.119	10.166	9.075	247.72	15.221
Mid Error%	0.0%	0.7%	1.3%	0.4%	0.1%	0.4%	0.1%	0.6%	0.6%
High Ref Cyl	21.910	18.040	91.830	484.80	91.380	21.910	18.040	491.60	24.270
High Avg	21.964	18.208	92.231	482.43	91.623	22.075	18.079	493.98	24.259
High Error%	0.2%	0.9%	0.4%	0.5%	0.3%	0.8%	0.2%	0.5%	0.0%

Calibration Error Test End

Initial System Bias Check, Run 1 STRATA Version 3.2
Operator: Phil Juneau
Plant Name: Covanta Huntington RRF
Location: Unit 2

Reference Cylinder Numbers

	Zero	Span
O2-Out		CC421867
CO2-O		CC421867
SO2-O		CC326338
NOx-O		SG9152406BAL
CO-O		CC177291
O2-In		CC421867
CO2-In		CC421867
SO2-In		CC33466
THC-O		CC432372

Date/Time 08-28-2013 08:05:31 PASSED

Analyte	O2-Out	CO2-O	SO2-O	NOx-O	CO-O	O2-In	CO2-In	SO2-In	THC-O
Units	%	%	ppm	ppm	ppm	%	%	ppm	ppm
Zero Ref Cyl	0.000	0.000	0.000	0.00	0.000	0.000	0.000	0.00	0.000
Zero Cal	-0.028	-0.035	-0.110	-0.21	0.211	0.016	0.003	0.45	-0.002
Zero Avg	-0.005	-0.036	0.304	1.04	0.044	0.022	0.022	0.38	0.726
Zero Bias%	0.1%	0.0%	0.4%	0.3%	0.2%	0.0%	0.1%	0.0%	2.4%
Zero Drift%									
Span Ref Cyl	10.070	9.094	47.160	234.70	45.070	10.070	9.094	244.70	9.944
Span Cal	10.079	8.959	48.344	232.92	45.119	10.166	9.075	247.72	10.144
Span Avg	9.990	8.898	45.288	233.98	44.088	10.074	9.031	237.65	10.047
Span Bias%	0.4%	0.3%	3.3%	0.2%	1.1%	0.4%	0.2%	2.0%	0.3%
Span Drift%									

System Bias Check End

Test Run 1 STRATA Version 3.2

	O2-Out	CO2-O	SO2-O	NOx-O	CO-O	O2-In	CO2-In	SO2-In	THC-O
	%	%	ppm	ppm	ppm	%	%	ppm	ppm
Begin calculating run averages									
08-28-2013 09:48:03	10.843	8.775	1.040	82.81	16.882	10.672	8.805	50.37	0.195
08-28-2013 09:49:03	10.520	8.784	0.999	90.16	18.497	10.021	9.515	50.91	0.187
08-28-2013 09:50:03	9.454	9.448	0.893	107.06	20.217	9.006	10.362	63.96	0.181
08-28-2013 09:51:03	9.108	10.087	1.007	127.78	14.385	8.980	10.297	66.62	0.178
08-28-2013 09:52:03	9.410	9.751	1.076	107.69	10.127	9.068	10.250	59.14	0.152
08-28-2013 09:53:04	9.485	9.686	1.058	89.62	10.782	9.212	10.096	59.34	0.134
08-28-2013 09:54:04	9.920	9.496	1.079	83.44	10.382	10.019	9.353	52.59	0.146
08-28-2013 09:55:04	10.683	8.885	1.040	83.20	9.464	10.580	8.867	43.21	0.167
08-28-2013 09:56:04	10.882	8.731	1.006	73.13	10.524	10.580	8.953	40.32	0.165
08-28-2013 09:57:04	10.328	8.865	1.060	82.73	10.656	9.879	9.547	46.15	0.143
08-28-2013 09:58:04	9.953	9.176	1.082	95.18	8.618	9.745	9.676	47.07	0.140
08-28-2013 09:59:04	10.025	9.182	0.962	92.01	8.942	9.641	9.784	46.02	0.147
08-28-2013 10:00:04	9.503	9.538	0.946	87.57	7.785	9.125	10.241	48.86	0.175
08-28-2013 10:01:04	9.624	9.705	0.989	84.07	8.737	9.438	9.955	47.72	0.154
08-28-2013 10:02:04	9.463	9.578	1.027	105.04	8.570	8.952	10.370	53.73	0.139
08-28-2013 10:03:04	9.473	9.885	1.037	106.27	6.642	9.660	9.631	53.65	0.151
08-28-2013 10:04:04	10.380	9.059	1.072	90.65	5.426	10.155	9.280	47.25	0.145
08-28-2013 10:05:04	10.289	8.944	1.031	75.63	6.075	9.853	9.630	47.45	0.133
08-28-2013 10:06:04	9.476	9.433	0.980	87.25	8.712	8.934	10.367	49.52	0.127
08-28-2013 10:07:04	9.418	9.900	1.008	127.26	5.862	9.429	9.863	47.68	0.143
08-28-2013 10:08:04	10.072	9.314	1.034	108.42	5.251	9.935	9.462	43.66	0.162
08-28-2013 10:09:03	9.916	9.151	1.073	80.68	7.432	9.507	9.893	46.98	0.220
08-28-2013 10:10:03	9.210	9.686	1.030	94.16	9.272	8.756	10.430	52.67	0.117
08-28-2013 10:11:03	9.990	9.619	1.075	100.87	10.871	10.038	9.301	42.98	0.190
Run Averages	O2-Out	CO2-O	SO2-O	NOx-O	CO-O	O2-In	CO2-In	SO2-In	THC-O
	%	%	ppm	ppm	ppm	%	%	ppm	ppm
08-28-2013 10:11:03	9.893	9.362	1.025	94.29	10.006	9.633	9.747	50.33	0.158

Operator: Phil Juneau
Plant Name: Covanta Huntington RRF
Location: Unit 2
Test Run 1 End

Final System Bias Check, Run 1 STRATA Version 3.2
Operator: Phil Juneau
Plant Name: Covanta Huntington RRF
Location: Unit 2

Reference Cylinder Numbers

	Zero	Span
O2-Out		CC421867
CO2-O		CC421867
SO2-O		CC326338
NOx-O		SG9152406BAL
CO-O		CC177291
O2-In		CC421867
CO2-In		CC421867
SO2-In		CC33466
THC-O		CC432372

Date/Time 08-28-2013 10:20:21 PASSED

Analyte	O2-Out	CO2-O	SO2-O	NOx-O	CO-O	O2-In	CO2-In	SO2-In	THC-O
Units	%	%	ppm	ppm	ppm	%	%	ppm	ppm
Zero Ref Cyl	0.000	0.000	0.000	0.00	0.000	0.000	0.000	0.00	0.000
Zero Cal	-0.028	-0.035	-0.110	-0.21	0.211	0.016	0.003	0.45	-0.002
Zero Avg	0.019	-0.041	1.057	1.19	0.042	0.019	-0.049	0.44	0.080
Zero Bias%	0.2%	0.0%	1.3%	0.3%	0.2%	0.0%	0.3%	0.0%	0.3%
Zero Drift%	0.1%	0.0%	0.8%	0.0%	0.0%	0.0%	-0.4%	0.0%	-2.2%
Span Ref Cyl	10.070	9.094	47.160	234.70	45.070	10.070	9.094	244.70	9.944
Span Cal	10.079	8.959	48.344	232.92	45.119	10.166	9.075	247.72	10.144
Span Avg	10.040	8.882	45.386	237.36	44.124	10.068	8.910	238.31	10.012
Span Bias%	0.2%	0.4%	3.2%	0.9%	1.1%	0.4%	0.9%	1.9%	0.4%
Span Drift%	0.2%	-0.1%	0.1%	0.7%	0.0%	0.0%	-0.7%	0.1%	-0.1%
Ini Zero Avg	-0.005	-0.036	0.304	1.04	0.044	0.022	0.022	0.38	0.726
Ini Span Avg	9.990	8.898	45.288	233.98	44.088	10.074	9.031	237.65	10.047
Run Avg	9.893	9.362	1.025	94.29	10.006	9.633	9.747	50.33	0.158
Co	0.007	-0.039	0.680	1.11	0.043	0.020	-0.013	0.41	0.403
Cm	10.015	8.890	45.337	235.67	44.106	10.071	8.970	237.98	10.029
Correct Avg	9.947	9.574	0.364	93.23	10.191	9.631	9.880	51.42	-0.253

System Bias Check End

Test Run 2 STRATA Version 3.2

	O2-Out %	CO2-O %	SO2-O ppm	NOx-O ppm	CO-O ppm	O2-In %	CO2-In %	SO2-In ppm	THC-O ppm
Begin calculating run averages									
08-28-2013 10:26:05	10.311	8.815	2.264	68.62	6.719	9.894	9.385	37.72	0.204
08-28-2013 10:27:05	10.379	8.950	1.964	65.36	7.643	10.316	8.999	33.85	0.254
08-28-2013 10:28:05	10.234	8.833	1.701	65.57	7.019	9.516	9.811	37.39	0.209
08-28-2013 10:29:05	9.258	9.628	1.601	86.73	7.608	9.046	10.063	40.93	0.237
08-28-2013 10:30:05	9.753	9.425	1.481	90.10	6.523	9.556	9.661	34.74	0.225
08-28-2013 10:31:05	9.581	9.353	1.436	99.74	5.160	9.164	9.999	38.80	0.204
08-28-2013 10:32:05	9.572	9.558	1.427	97.34	5.438	9.459	9.713	38.19	0.231
08-28-2013 10:33:05	9.448	9.436	1.359	101.91	5.456	9.080	10.079	39.87	0.221
08-28-2013 10:34:05	9.376	9.642	1.297	99.83	6.172	9.088	10.067	40.54	0.200
08-28-2013 10:35:05	9.354	9.724	1.258	100.48	5.490	9.204	9.934	42.54	0.209
08-28-2013 10:36:05	9.735	9.451	1.276	84.35	5.364	9.676	9.487	42.37	0.212
08-28-2013 10:37:05	10.483	8.949	1.171	58.10	5.650	10.344	8.973	38.59	0.227
08-28-2013 10:38:06	10.093	8.912	1.190	68.25	6.084	9.714	9.512	44.17	0.218
08-28-2013 10:39:06	9.959	9.153	1.189	92.74	5.512	9.723	9.535	44.79	0.237
08-28-2013 10:40:06	9.674	9.264	1.229	97.70	6.057	9.262	9.965	50.00	0.224
08-28-2013 10:41:06	9.899	9.373	1.168	92.82	5.653	9.794	9.497	48.42	0.234
08-28-2013 10:42:06	9.672	9.215	1.115	88.66	5.854	9.220	9.982	54.45	0.252
08-28-2013 10:43:06	9.633	9.545	1.188	94.49	7.025	9.450	9.793	50.81	0.297
08-28-2013 10:44:06	10.092	9.268	1.140	73.53	5.220	10.089	9.196	45.92	0.240
08-28-2013 10:45:06	10.531	8.843	1.185	59.65	5.315	10.222	9.098	48.38	0.261
08-28-2013 10:46:06	10.261	8.918	1.111	69.93	7.629	9.976	9.359	53.77	0.224
08-28-2013 10:47:06	10.163	8.988	1.201	73.19	8.925	9.829	9.543	54.71	0.248
08-28-2013 10:48:06	10.145	9.101	1.226	90.07	11.203	9.906	9.454	51.31	0.317
08-28-2013 10:49:06	9.723	8.960	1.404	112.79	8.046	9.371	9.868	56.16	0.305
Run Averages	O2-Out %	CO2-O %	SO2-O ppm	NOx-O ppm	CO-O ppm	O2-In %	CO2-In %	SO2-In ppm	THC-O ppm
08-28-2013 10:49:06	9.889	9.221	1.358	84.66	6.532	9.621	9.624	44.52	0.237

Operator: Phil Juneau
Plant Name: Covanta Huntington RRF
Location: Unit 2
Test Run 2 End

Final System Bias Check, Run 2 STRATA Version 3.2
Operator: Phil Juneau
Plant Name: Covanta Huntington RRF
Location: Unit 2

Reference Cylinder Numbers

	Zero	Span
O2-Out		CC421867
CO2-O		CC421867
SO2-O		CC326338
NOx-O		SG9152406BAL
CO-O		CC177291
O2-In		CC421867
CO2-In		CC421867
SO2-In		CC33466
THC-O		CC432372

Date/Time 08-28-2013 10:59:10 PASSED

Analyte	O2-Out	CO2-O	SO2-O	NOx-O	CO-O	O2-In	CO2-In	SO2-In	THC-O
Units	%	%	ppm	ppm	ppm	%	%	ppm	ppm
Zero Ref Cyl	0.000	0.000	0.000	0.00	0.000	0.000	0.000	0.00	0.000
Zero Cal	-0.028	-0.035	-0.110	-0.21	0.211	0.016	0.003	0.45	-0.002
Zero Avg	0.014	-0.037	1.169	1.11	0.186	0.019	-0.067	0.59	-0.024
Zero Bias%	0.2%	0.0%	1.4%	0.3%	0.0%	0.0%	0.4%	0.0%	0.1%
Zero Drift%	0.0%	0.0%	0.1%	0.0%	0.2%	0.0%	-0.1%	0.0%	-0.3%
Span Ref Cyl	10.070	9.094	47.160	234.70	45.070	10.070	9.094	244.70	9.944
Span Cal	10.079	8.959	48.344	232.92	45.119	10.166	9.075	247.72	10.144
Span Avg	10.039	8.896	45.050	237.74	44.268	10.069	8.891	238.76	10.010
Span Bias%	0.2%	0.4%	3.6%	1.0%	0.9%	0.4%	1.0%	1.8%	0.4%
Span Drift%	0.0%	0.1%	-0.4%	0.1%	0.2%	0.0%	-0.1%	0.1%	0.0%
Ini Zero Avg	0.019	-0.041	1.057	1.19	0.042	0.019	-0.049	0.44	0.080
Ini Span Avg	10.040	8.882	45.386	237.36	44.124	10.068	8.910	238.31	10.012
Run Avg	9.889	9.221	1.358	84.66	6.532	9.621	9.624	44.52	0.237
Co	0.016	-0.039	1.113	1.15	0.114	0.019	-0.058	0.51	0.028
Cm	10.039	8.889	45.218	237.55	44.196	10.069	8.900	238.53	10.011
Correct Avg	9.919	9.432	0.261	82.91	6.562	9.621	9.829	45.24	0.208

System Bias Check End

Test Run 3 STRATA Version 3.2

	O2-Out %	CO2-O %	SO2-O ppm	NOx-O ppm	CO-O ppm	O2-In %	CO2-In %	SO2-In ppm	THC-O ppm
Begin calculating run averages									
08-28-2013 11:11:03	9.217	9.382	1.428	110.01	6.743	8.468	10.680	50.07	0.059
08-28-2013 11:12:03	9.506	10.045	1.409	122.54	6.939	9.865	9.308	42.15	0.093
08-28-2013 11:13:03	10.686	8.869	1.382	86.06	4.767	10.453	8.921	38.72	0.090
08-28-2013 11:14:02	10.205	8.873	1.321	90.26	7.086	9.646	9.761	41.52	0.068
08-28-2013 11:15:02	9.403	9.587	1.339	119.93	8.769	9.018	10.231	45.43	0.061
08-28-2013 11:16:02	9.554	9.743	1.287	95.74	7.045	9.446	9.888	44.95	0.056
08-28-2013 11:17:02	9.651	9.507	1.264	79.25	6.843	9.544	9.748	46.72	0.043
08-28-2013 11:18:02	10.157	9.205	1.278	57.78	6.863	9.995	9.358	45.69	2.077*
08-28-2013 11:19:02	10.194	9.008	1.312	41.07	7.494	9.845	9.522	48.13	4.860
08-28-2013 11:20:02	9.959	9.184	1.312	67.86	7.661	9.591	9.758	50.46	0.473
08-28-2013 11:21:02	9.485	9.510	1.287	103.06	7.489	9.094	10.199	50.95	0.233
08-28-2013 11:22:02	9.615	9.751	1.283	107.01	6.828	9.627	9.650	43.39	0.258
08-28-2013 11:23:02	10.179	9.102	1.224	95.11	4.946	9.868	9.454	40.78	0.439
08-28-2013 11:24:02	9.673	9.274	1.282	99.97	4.791	9.180	10.064	48.80	0.150
08-28-2013 11:25:02	9.706	9.570	1.219	102.12	4.319	9.556	9.710	47.01	0.164
08-28-2013 11:26:02	9.659	9.379	1.268	107.26	3.840	9.318	9.957	46.16	0.151
08-28-2013 11:27:02	9.306	9.669	1.217	111.29	3.892	8.932	10.240	49.01	0.139
08-28-2013 11:28:02	9.307	9.818	1.218	110.21	3.449	9.058	10.145	48.58	0.138
08-28-2013 11:29:02	9.667	9.641	1.237	104.50	3.353	9.710	9.493	46.75	0.284
08-28-2013 11:30:02	10.605	8.931	1.224	68.10	3.325	10.612	8.681	36.29	0.151
08-28-2013 11:31:02	10.848	8.670	1.173	62.01	3.304	10.349	9.049	39.81	0.245
08-28-2013 11:32:02	10.228	8.943	1.261	84.29	4.461	10.064	9.213	46.40	0.146
08-28-2013 11:33:02	9.985	9.016	1.186	112.85	5.490	9.391	9.969	46.18	0.155
08-28-2013 11:34:02	9.731	9.475	1.529	117.07	7.146	9.689	9.605	42.64	0.417
Run Averages	O2-Out %	CO2-O %	SO2-O ppm	NOx-O ppm	CO-O ppm	O2-In %	CO2-In %	SO2-In ppm	THC-O ppm
08-28-2013 11:34:02	9.855	9.340	1.289	93.99	5.702	9.596	9.692	45.28	0.456*

Operator: Phil Juneau
Plant Name: Covanta Huntington RRF
Location: Unit 2
Test Run 3 End

Final System Bias Check, Run 3 STRATA Version 3.2
Operator: Phil Juneau
Plant Name: Covanta Huntington RRF
Location: Unit 2

Reference Cylinder Numbers

	Zero	Span
O2-Out		CC421867
CO2-O		CC421867
SO2-O		CC326338
NOx-O		SG9152406BAL
CO-O		CC177291
O2-In		CC421867
CO2-In		CC421867
SO2-In		CC33466
THC-O		CC432372

Date/Time 08-28-2013 11:43:54 PASSED

Analyte	O2-Out	CO2-O	SO2-O	NOx-O	CO-O	O2-In	CO2-In	SO2-In	THC-O
Units	%	%	ppm	ppm	ppm	%	%	ppm	ppm
Zero Ref Cyl	0.000	0.000	0.000	0.00	0.000	0.000	0.000	0.00	0.000
Zero Cal	-0.028	-0.035	-0.110	-0.21	0.211	0.016	0.003	0.45	-0.002
Zero Avg	0.012	-0.036	1.190	1.19	0.084	0.016	-0.041	0.71	0.063
Zero Bias%	0.2%	0.0%	1.4%	0.3%	0.1%	0.0%	0.2%	0.1%	0.2%
Zero Drift%	0.0%	0.0%	0.0%	0.0%	-0.1%	0.0%	0.1%	0.0%	0.3%
Span Ref Cyl	10.070	9.094	47.160	234.70	45.070	10.070	9.094	244.70	9.944
Span Cal	10.079	8.959	48.344	232.92	45.119	10.166	9.075	247.72	10.144
Span Avg	10.033	8.902	45.142	238.09	44.121	10.040	8.897	234.56	10.161
Span Bias%	0.2%	0.3%	3.5%	1.1%	1.1%	0.6%	1.0%	2.7%	0.1%
Span Drift%	0.0%	0.0%	0.1%	0.1%	-0.2%	-0.1%	0.0%	-0.9%	0.5%
Ini Zero Avg	0.014	-0.037	1.169	1.11	0.186	0.019	-0.067	0.59	-0.024
Ini Span Avg	10.039	8.896	45.050	237.74	44.268	10.069	8.891	238.76	10.010
Run Avg	9.855	9.340	1.289	93.99	5.702	9.596	9.692	45.28	0.456
Co	0.013	-0.037	1.179	1.15	0.135	0.017	-0.054	0.65	0.020
Cm	10.036	8.899	45.096	237.92	44.194	10.054	8.894	236.66	10.085
Correct Avg	9.888	9.543	0.118	92.03	5.694	9.610	9.906	46.27	0.431

System Bias Check End

Test Run 4 STRATA Version 3.2

	O2-Out	CO2-O	SO2-O	NOx-O	CO-O	O2-In	CO2-In	SO2-In	THC-O
	%	%	ppm	ppm	ppm	%	%	ppm	ppm
Begin calculating run averages									
08-28-2013 11:51:03	9.999	9.411	2.800	92.09	6.955	10.044	9.203	35.04	0.147
08-28-2013 11:52:03	10.286	8.906	2.525	85.79	5.556	9.793	9.487	35.86	0.128
08-28-2013 11:53:03	9.940	9.133	2.116	90.28	6.077	9.660	9.572	37.72	0.124
08-28-2013 11:54:03	9.875	9.157	1.850	79.74	6.112	9.532	9.662	40.26	0.111
08-28-2013 11:55:03	10.046	9.177	1.615	78.95	6.346	9.929	9.272	40.71	0.115
08-28-2013 11:56:03	10.319	8.881	1.586	73.98	6.216	9.767	9.538	42.63	0.122
08-28-2013 11:57:03	9.730	9.302	1.551	93.37	6.271	9.528	9.674	52.15	0.110
08-28-2013 11:58:03	9.738	9.353	1.508	101.06	6.225	9.368	9.835	48.65	0.107
08-28-2013 11:59:03	9.558	9.533	1.464	93.74	6.152	9.361	9.763	48.08	0.092
08-28-2013 12:00:03	10.322	9.129	1.405	78.06	5.357	10.250	8.976	44.58	0.107
08-28-2013 12:01:03	10.846	8.728	1.363	61.58	7.201	10.496	8.881	42.72	0.095
08-28-2013 12:02:03	10.216	8.894	1.406	69.55	8.685	9.845	9.447	48.14	0.086
08-28-2013 12:03:03	10.165	9.009	1.372	90.65	8.745	9.788	9.498	45.10	0.112
08-28-2013 12:04:03	9.741	9.256	1.386	102.74	7.986	9.324	9.910	48.53	0.105
08-28-2013 12:05:03	9.982	9.334	1.364	85.69	7.904	9.867	9.400	40.91	0.375
08-28-2013 12:06:03	10.100	8.996	1.334	84.26	7.566	9.636	9.666	37.75	0.095
08-28-2013 12:07:03	10.081	9.263	1.328	84.51	7.638	9.986	9.303	34.43	0.102
08-28-2013 12:08:03	10.057	9.002	1.343	85.92	7.836	9.527	9.787	33.81	0.101
08-28-2013 12:09:03	9.348	9.589	1.292	111.04	9.754	8.921	10.259	39.92	0.092
08-28-2013 12:10:03	9.375	9.810	1.334	133.78	7.275	9.006	10.226	39.04	0.097
08-28-2013 12:11:03	9.282	9.858	1.312	110.28	6.723	8.960	10.290	38.79	0.080
08-28-2013 12:12:03	8.754	10.088	1.356	110.32	7.883	8.312	10.687	37.49	0.078
08-28-2013 12:13:03	9.202	10.057	1.344	109.89	4.126	9.090	9.986	35.04	0.075
08-28-2013 12:14:03	10.181	9.230	1.752	72.46	3.673	10.126	9.054	34.20	0.085
Run Averages	O2-Out	CO2-O	SO2-O	NOx-O	CO-O	O2-In	CO2-In	SO2-In	THC-O
	%	%	ppm	ppm	ppm	%	%	ppm	ppm
08-28-2013 12:14:03	9.881	9.296	1.571	90.82	6.844	9.588	9.641	40.90	0.114

Operator: Phil Juneau
Plant Name: Covanta Huntington RRF
Location: Unit 2
Test Run 4 End

Final System Bias Check, Run 4 STRATA Version 3.2
Operator: Phil Juneau
Plant Name: Covanta Huntington RRF
Location: Unit 2

Reference Cylinder Numbers

	Zero	Span
O2-Out		CC421867
CO2-O		CC421867
SO2-O		CC326338
NOx-O		SG9152406BAL
CO-O		CC177291
O2-In		CC421867
CO2-In		CC421867
SO2-In		CC33466
THC-O		CC432372

Date/Time 08-28-2013 12:24:10 PASSED

Analyte	O2-Out	CO2-O	SO2-O	NOx-O	CO-O	O2-In	CO2-In	SO2-In	THC-O
Units	%	%	ppm	ppm	ppm	%	%	ppm	ppm
Zero Ref Cyl	0.000	0.000	0.000	0.00	0.000	0.000	0.000	0.00	0.000
Zero Cal	-0.028	-0.035	-0.110	-0.21	0.211	0.016	0.003	0.45	-0.002
Zero Avg	0.012	-0.037	1.134	1.14	0.084	0.017	-0.048	2.12	0.050
Zero Bias%	0.2%	0.0%	1.4%	0.3%	0.1%	0.0%	0.3%	0.3%	0.2%
Zero Drift%	0.0%	0.0%	-0.1%	0.0%	0.0%	0.0%	0.0%	0.3%	0.0%
Span Ref Cyl	10.070	9.094	47.160	234.70	45.070	10.070	9.094	244.70	9.944
Span Cal	10.079	8.959	48.344	232.92	45.119	10.166	9.075	247.72	10.144
Span Avg	10.032	8.891	45.089	238.22	44.086	10.024	8.882	232.16	10.173
Span Bias%	0.2%	0.4%	3.5%	1.1%	1.1%	0.6%	1.1%	3.2%	0.1%
Span Drift%	0.0%	-0.1%	-0.1%	0.0%	0.0%	-0.1%	-0.1%	-0.5%	0.0%
Ini Zero Avg	0.012	-0.036	1.190	1.19	0.084	0.016	-0.041	0.71	0.063
Ini Span Avg	10.033	8.902	45.142	238.09	44.121	10.040	8.897	234.56	10.161
Run Avg	9.881	9.296	1.571	90.82	6.844	9.588	9.641	40.90	0.114
Co	0.012	-0.037	1.162	1.16	0.084	0.017	-0.045	1.41	0.057
Cm	10.032	8.896	45.116	238.16	44.104	10.032	8.889	233.36	10.167
Correct Avg	9.918	9.500	0.439	88.79	6.922	9.624	9.859	41.65	0.057

System Bias Check End

Test Run 5 STRATA Version 3.2

	O2-Out	CO2-O	SO2-O	NOx-O	CO-O	O2-In	CO2-In	SO2-In	THC-O
	%	%	ppm	ppm	ppm	%	%	ppm	ppm
Begin calculating run averages									
08-28-2013 12:34:01	9.681	9.590	1.752	98.98	5.150	9.509	9.715	47.26	0.062
08-28-2013 12:35:01	10.020	9.235	1.610	96.45	4.260	9.775	9.475	44.52	0.067
08-28-2013 12:36:01	9.877	9.247	1.527	78.76	3.979	9.584	9.657	47.52	0.050
08-28-2013 12:37:01	9.841	9.297	1.614	72.69	4.699	9.535	9.716	49.22	0.099
08-28-2013 12:38:01	9.883	9.350	1.454	86.82	5.508	9.667	9.615	47.80	0.121
08-28-2013 12:39:01	9.762	9.369	1.625	80.27	6.484	9.412	9.863	49.48	0.053
08-28-2013 12:40:01	9.704	9.474	1.465	79.50	6.883	9.477	9.785	49.42	0.045
08-28-2013 12:41:01	9.693	9.402	1.472	96.23	5.735	9.347	9.925	51.46	0.049
08-28-2013 12:42:01	9.575	9.629	1.478	101.06	5.763	9.443	9.796	51.62	0.059
08-28-2013 12:43:01	9.831	9.383	1.399	99.01	5.145	9.509	9.805	48.26	0.058
08-28-2013 12:44:01	9.512	9.541	1.456	113.00	5.452	9.147	10.187	50.04	0.056
08-28-2013 12:45:01	10.000	9.602	1.425	92.88	6.873	10.042	9.329	43.43	0.053
08-28-2013 12:46:01	10.422	8.938	1.452	73.00	6.792	10.059	9.380	42.31	0.054
08-28-2013 12:47:01	10.298	9.065	1.424	81.93	8.546	10.149	9.296	42.47	0.051
08-28-2013 12:48:01	10.531	8.934	1.332	82.14	8.589	10.333	9.115	38.29	0.050
08-28-2013 12:49:01	10.424	8.905	1.406	86.56	9.064	10.076	9.338	40.05	0.054
08-28-2013 12:50:01	10.239	9.080	1.391	97.49	9.505	10.057	9.355	41.62	0.045
08-28-2013 12:51:01	10.510	8.924	1.343	91.53	9.517	10.198	9.265	38.52	0.037
08-28-2013 12:52:01	10.296	9.001	1.407	76.34	9.089	10.157	9.238	41.27	0.031
08-28-2013 12:53:01	10.903	8.811	1.395	66.28	8.350	10.755	8.715	37.59	0.066
08-28-2013 12:54:01	10.885	8.740	1.341	80.94	9.573	10.631	8.821	34.60	0.056
08-28-2013 12:55:01	10.902	8.763	1.441	101.41	12.878	10.680	8.819	33.79	0.073
08-28-2013 12:56:01	10.472	8.833	1.361	100.69	12.934	10.089	9.340	36.11	0.042
08-28-2013 12:57:01	10.483	8.953	1.561	91.70	10.845	10.473	8.907	33.63	0.044
Run Averages	O2-Out	CO2-O	SO2-O	NOx-O	CO-O	O2-In	CO2-In	SO2-In	THC-O
	%	%	ppm	ppm	ppm	%	%	ppm	ppm
08-28-2013 12:57:02	10.156	9.169	1.464	88.57	7.567	9.921	9.436	43.34	0.057

Operator: Phil Juneau
Plant Name: Covanta Huntington RRF
Location: Unit 2
Test Run 5 End

Final System Bias Check, Run 5 STRATA Version 3.2

Operator: Phil Juneau
Plant Name: Covanta Huntington RRF
Location: Unit 2

Reference Cylinder Numbers

	Zero	Span
O2-Out		CC421867
CO2-O		CC421867
SO2-O		CC326338
NOx-O		SG9152406BAL
CO-O		CC177291
O2-In		CC421867
CO2-In		CC421867
SO2-In		CC33466
THC-O		CC432372

Date/Time 08-28-2013 13:06:21 PASSED

Analyte	O2-Out	CO2-O	SO2-O	NOx-O	CO-O	O2-In	CO2-In	SO2-In	THC-O
Units	%	%	ppm	ppm	ppm	%	%	ppm	ppm
Zero Ref Cyl	0.000	0.000	0.000	0.00	0.000	0.000	0.000	0.00	0.000
Zero Cal	-0.028	-0.035	-0.110	-0.21	0.211	0.016	0.003	0.45	-0.002
Zero Avg	0.016	-0.037	1.362	1.30	0.033	0.024	-0.080	1.05	0.018
Zero Bias%	0.2%	0.0%	1.6%	0.3%	0.2%	0.0%	0.5%	0.1%	0.1%
Zero Drift%	0.0%	0.0%	0.2%	0.0%	-0.1%	0.0%	-0.2%	-0.2%	-0.1%
Span Ref Cyl	10.070	9.094	47.160	234.70	45.070	10.070	9.094	244.70	9.944
Span Cal	10.079	8.959	48.344	232.92	45.119	10.166	9.075	247.72	10.144
Span Avg	10.024	8.901	44.547	237.12	44.088	10.063	8.859	235.10	10.065
Span Bias%	0.3%	0.3%	4.1%	0.9%	1.1%	0.5%	1.2%	2.6%	0.3%
Span Drift%	0.0%	0.1%	-0.6%	-0.2%	0.0%	0.2%	-0.1%	0.6%	-0.4%
Ini Zero Avg	0.012	-0.037	1.134	1.14	0.084	0.017	-0.048	2.12	0.050
Ini Span Avg	10.032	8.891	45.089	238.22	44.086	10.024	8.882	232.16	10.173
Run Avg	10.156	9.169	1.464	88.57	7.567	9.921	9.436	43.34	0.057
Co	0.014	-0.037	1.248	1.22	0.059	0.021	-0.064	1.59	0.034
Cm	10.028	8.896	44.818	237.67	44.087	10.044	8.870	233.63	10.119
Correct Avg	10.199	9.372	0.233	86.70	7.686	9.947	9.670	44.04	0.023

System Bias Check End

Test Run 6 STRATA Version 3.2

	O2-Out	CO2-O	SO2-O	NOx-O	CO-O	O2-In	CO2-In	SO2-In	THC-O
	%	%	ppm	ppm	ppm	%	%	ppm	ppm
Begin calculating run averages									
08-28-2013 13:13:02	9.623	9.379	2.283	94.04	10.129	9.321	9.917	49.03	0.050
08-28-2013 13:14:01	9.717	9.401	2.109	79.59	8.531	9.494	9.776	55.62	0.037
08-28-2013 13:15:02	10.053	9.205	1.843	81.93	7.747	9.939	9.370	59.79	0.032
08-28-2013 13:16:02	10.503	8.881	1.702	84.63	6.863	10.327	9.031	63.81	0.053
08-28-2013 13:17:02	9.897	8.939	1.593	79.76	7.559	9.233	10.085	84.65	0.026
08-28-2013 13:18:02	9.077	9.902	1.643	93.04	8.329	8.843	10.332	88.97	0.018
08-28-2013 13:19:02	9.164	9.881	1.492	94.13	8.563	9.006	10.101	89.89	0.023
08-28-2013 13:20:02	10.140	9.312	1.461	80.73	7.780	10.260	8.950	75.70	0.034
08-28-2013 13:21:02	11.229	8.657	1.406	65.84	7.060	11.223	8.126	66.54	0.157
08-28-2013 13:22:02	11.182	8.478	1.381	74.34	9.736	10.676	8.728	75.22	0.042
08-28-2013 13:23:02	10.149	8.830	1.356	100.09	10.173	9.661	9.654	89.79	0.040
08-28-2013 13:24:02	9.576	9.391	1.316	92.92	10.643	9.238	10.039	92.71	0.019
08-28-2013 13:25:02	9.397	9.704	1.297	89.54	8.790	9.264	9.979	85.76	0.012
08-28-2013 13:26:02	9.797	9.400	1.393	84.49	6.471	9.615	9.705	86.19	0.031
08-28-2013 13:27:02	9.924	9.322	1.378	82.86	7.443	9.810	9.495	82.38	0.062
08-28-2013 13:28:02	10.559	8.932	1.373	61.78	8.266	10.408	9.010	78.71	0.078
08-28-2013 13:29:02	10.744	8.783	1.397	64.53	12.952	10.447	9.061	85.42	0.066
08-28-2013 13:30:02	10.287	8.911	1.392	90.44	15.880	9.831	9.701	93.32	0.055
08-28-2013 13:31:02	9.704	9.422	1.341	112.48	19.617	9.503	9.813	94.59	0.057
08-28-2013 13:32:02	9.830	9.266	1.391	87.60	15.723	9.447	9.866	89.39	0.026
08-28-2013 13:33:02	9.547	9.531	1.389	79.89	14.618	9.328	9.882	93.43	0.039
08-28-2013 13:34:02	9.946	9.347	1.435	90.15	13.525	10.010	9.173	85.13	0.174
08-28-2013 13:35:02	11.145	8.716	1.361	80.02	11.274	11.168	8.211	65.98	0.077
08-28-2013 13:36:02	11.718	8.415	1.343	65.46	13.522	11.491	8.000	62.87	0.085
Run Averages	O2-Out	CO2-O	SO2-O	NOx-O	CO-O	O2-In	CO2-In	SO2-In	THC-O
	%	%	ppm	ppm	ppm	%	%	ppm	ppm
08-28-2013 13:36:02	10.121	9.167	1.503	83.77	10.467	9.897	9.417	78.95	0.054

Operator: Phil Juneau
Plant Name: Covanta Huntington RRF
Location: Unit 2
Test Run 6 End

Final System Bias Check, Run 6 STRATA Version 3.2
Operator: Phil Juneau
Plant Name: Covanta Huntington RRF
Location: Unit 2

Reference Cylinder Numbers

	Zero	Span
O2-Out		CC421867
CO2-O		CC421867
SO2-O		CC326338
NOx-O		SG9152406BAL
CO-O		CC177291
O2-In		CC421867
CO2-In		CC421867
SO2-In		CC33466
THC-O		CC432372

Date/Time 08-28-2013 13:47:10 PASSED

Analyte	O2-Out	CO2-O	SO2-O	NOx-O	CO-O	O2-In	CO2-In	SO2-In	THC-O
Units	%	%	ppm	ppm	ppm	%	%	ppm	ppm
Zero Ref Cyl	0.000	0.000	0.000	0.00	0.000	0.000	0.000	0.00	0.000
Zero Cal	-0.028	-0.035	-0.110	-0.21	0.211	0.016	0.003	0.45	-0.002
Zero Avg	0.012	-0.039	1.129	1.25	0.137	0.017	-0.041	0.89	0.011
Zero Bias%	0.2%	0.0%	1.3%	0.3%	0.1%	0.0%	0.2%	0.1%	0.0%
Zero Drift%	0.0%	0.0%	-0.3%	0.0%	0.1%	0.0%	0.2%	0.0%	0.0%
Span Ref Cyl	10.070	9.094	47.160	234.70	45.070	10.070	9.094	244.70	9.944
Span Cal	10.079	8.959	48.344	232.92	45.119	10.166	9.075	247.72	10.144
Span Avg	10.024	8.899	44.324	236.99	44.290	10.063	8.916	236.49	10.123
Span Bias%	0.3%	0.3%	4.4%	0.8%	0.9%	0.5%	0.9%	2.3%	0.1%
Span Drift%	0.0%	0.0%	-0.2%	0.0%	0.2%	0.0%	0.3%	0.3%	0.2%
Ini Zero Avg	0.016	-0.037	1.362	1.30	0.033	0.024	-0.080	1.05	0.018
Ini Span Avg	10.024	8.901	44.547	237.12	44.088	10.063	8.859	235.10	10.065
Run Avg	10.121	9.167	1.503	83.77	10.467	9.897	9.417	78.95	0.054
Co	0.014	-0.038	1.246	1.28	0.085	0.021	-0.060	0.97	0.014
Cm	10.024	8.900	44.436	237.06	44.189	10.063	8.888	235.79	10.094
Correct Avg	10.168	9.366	0.281	82.12	10.610	9.904	9.632	81.26	0.039

System Bias Check End

Calibration Error Test, Run 7 STRATA Version 3.2
Operator: Phil Juneau
Plant Name: Covanta Huntington RRF
Location: Unit 2

Reference Cylinder Numbers

	Zero	Low-range	Mid-range	High-range
O2-Out		CC427661	CC366298	CC175833
CO2-O		CC427661	CC366298	CC175833
O2-In		CC427661	CC366298	CC175833
CO2-In		CC427661	CC366298	CC175833

Date/Time 08-28-2013 13:58:18 PASSED

Analyte	O2-Out	CO2-O	O2-In	CO2-In
Units	%	%	%	%
Zero Ref Cyl	0.000	0.000	0.000	0.000
Zero Avg	-0.012	-0.036	0.004	-0.007
Zero Error%	0.1%	0.2%	0.0%	0.0%
Low Ref Cyl				
Low Avg				
Low Error%				
Mid Ref Cyl	9.982	8.945	9.982	8.945
Mid Avg	10.005	8.876	10.070	8.910
Mid Error%	0.1%	0.4%	0.4%	0.2%
High Ref Cyl	21.910	18.040	21.910	18.040
High Avg	21.980	18.311	22.055	18.115
High Error%	0.3%	1.5%	0.7%	0.4%

Calibration Error Test End

Initial System Bias Check, Run 7 STRATA Version 3.2
Operator: Phil Juneau
Plant Name: Covanta Huntington RRF
Location: Unit 2

Reference Cylinder Numbers

	Zero	Span
O2-Out		CC366298
CO2-O		CC366298
O2-In		CC366298
CO2-In		CC366298

Date/Time 08-28-2013 14:03:31 PASSED

Analyte	O2-Out	CO2-O	O2-In	CO2-In
Units	%	%	%	%
Zero Ref Cyl	0.000	0.000	0.000	0.000
Zero Cal	-0.012	-0.036	0.004	-0.007
Zero Avg	0.020	-0.037	0.033	0.073
Zero Bias%	0.1%	0.0%	0.1%	0.4%
Zero Drift%				
Span Ref Cyl	9.982	8.945	9.982	8.945
Span Cal	10.005	8.876	10.070	8.910
Span Avg	9.946	8.831	9.972	8.872
Span Bias%	0.3%	0.2%	0.4%	0.2%
Span Drift%				

System Bias Check End

Test Run 7 STRATA Version 3.2

	O2-Out	CO2-O	SO2-O	NOx-O	CO-O	O2-In	CO2-In	SO2-In	THC-O
	%	%	ppm	ppm	ppm	%	%	ppm	ppm
Begin calculating run averages									
08-28-2013 14:07:03	10.484	9.205	1.205	102.27	9.541	10.382	8.958	24.38	0.131
08-28-2013 14:08:03	11.063	8.648	1.236	69.59	8.075	10.825	8.787	28.59	0.102
08-28-2013 14:09:03	10.690	8.709	1.210	81.14	11.743	10.387	9.174	30.60	0.091
08-28-2013 14:10:03	10.366	8.888	1.099	80.37	9.533	10.101	9.276	27.87	0.085
08-28-2013 14:11:03	9.347	9.109	1.095	99.16	10.236	8.778	11.006	33.00	0.055
08-28-2013 14:12:03	8.210	10.860	1.103	132.86	9.192	7.902	10.751	39.93	0.057
08-28-2013 14:13:03	10.478	9.468	1.135	95.51	4.805	10.515	8.463	23.44	0.090
08-28-2013 14:14:03	11.809	8.373	0.997	51.60	3.939	11.651	7.854	20.33	0.096
08-28-2013 14:15:03	11.360	8.392	1.050	60.33	7.039	11.061	8.484	23.72	0.107
08-28-2013 14:16:03	11.098	8.573	1.093	82.55	9.137	10.821	8.603	24.19	0.126
08-28-2013 14:17:03	11.243	8.553	1.064	86.08	11.065	11.025	8.651	24.31	0.112
08-28-2013 14:18:03	8.806	9.324	1.119	123.77	15.465	8.216	11.815	77.48	0.071
08-28-2013 14:19:03	7.748	11.475	1.110	155.01	18.540	7.467	10.975	112.37	0.088
08-28-2013 14:20:03	9.959	9.724	1.037	126.61	8.543	9.878	9.193	37.40	0.139
08-28-2013 14:21:03	11.591	8.628	1.036	62.43	6.001	11.555	7.745	26.21	0.168
08-28-2013 14:22:03	12.418	8.145	0.996	45.46	9.129	12.244	7.435	23.04	0.180
08-28-2013 14:23:03	12.341	8.121	0.977	63.26	12.254	12.111	7.625	22.23	0.183
08-28-2013 14:24:03	11.745	8.256	1.019	90.02	12.820	11.509	8.725	23.15	0.166
08-28-2013 14:25:03	8.225	9.747	1.000	121.81	15.213	7.477	11.974	44.48	0.099
08-28-2013 14:26:03	9.230	10.917	0.937	98.49	12.417	9.272	9.560	32.16	0.143
08-28-2013 14:27:03	11.221	8.776	0.960	61.85	9.629	11.087	8.450	21.24	0.172
08-28-2013 14:28:03	11.650	8.466	0.931	61.94	10.153	11.507	8.123	18.11	0.182
08-28-2013 14:29:03	11.503	8.449	0.977	85.58	11.270	11.246	8.269	17.32	0.192
08-28-2013 14:30:03	10.983	8.536	0.928	102.19	12.701	10.621	9.359	19.54	0.187
Run Averages	O2-Out	CO2-O	SO2-O	NOx-O	CO-O	O2-In	CO2-In	SO2-In	THC-O
	%	%	ppm	ppm	ppm	%	%	ppm	ppm
08-28-2013 14:30:03	10.565	9.056	1.055	89.16	10.352	10.318	9.136	32.30	0.126

Operator: Phil Juneau
Plant Name: Covanta Huntington RRF
Location: Unit 2
Test Run 7 End

Final System Bias Check, Run 7 STRATA Version 3.2
Operator: Phil Juneau
Plant Name: Covanta Huntington RRF
Location: Unit 2

Reference Cylinder Numbers

	Zero	Span
O2-Out		CC366298
CO2-O		CC366298
SO2-O		CC326338
NOx-O		SG9152406BAL
CO-O		CC177291
O2-In		CC366298
CO2-In		CC366298
SO2-In		CC33466
THC-O		CC432372

Date/Time 08-28-2013 14:40:16 PASSED

Analyte	O2-Out	CO2-O	SO2-O	NOx-O	CO-O	O2-In	CO2-In	SO2-In	THC-O
Units	%	%	ppm	ppm	ppm	%	%	ppm	ppm
Zero Ref Cyl	0.000	0.000	0.000	0.00	0.000	0.000	0.000	0.00	0.000
Zero Cal	-0.012	-0.036	-0.110	-0.21	0.211	0.004	-0.007	0.45	-0.002
Zero Avg	0.012	-0.040	0.979	1.20	-0.132	0.017	0.048	0.75	0.043
Zero Bias%	0.1%	0.0%	1.2%	0.3%	0.4%	0.1%	0.3%	0.1%	0.2%
Zero Drift%	0.0%	0.0%	-0.2%	0.0%	-0.3%	-0.1%	-0.1%	0.0%	0.1%
Span Ref Cyl	9.982	8.945	47.160	234.70	45.070	9.982	8.945	244.70	9.944
Span Cal	10.005	8.876	48.344	232.92	45.119	10.070	8.910	247.72	10.144
Span Avg	9.942	8.816	44.659	237.44	44.295	9.966	8.859	236.45	9.970
Span Bias%	0.3%	0.3%	4.0%	0.9%	0.9%	0.5%	0.3%	2.3%	0.6%
Span Drift%	0.0%	-0.1%	0.4%	0.1%	0.0%	0.0%	-0.1%	0.0%	-0.5%
Ini Zero Avg	0.020	-0.037	1.129	1.25	0.137	0.033	0.073	0.89	0.011
Ini Span Avg	9.946	8.831	44.324	236.99	44.290	9.972	8.872	236.49	10.123
Run Avg	10.565	9.056	1.055	89.16	10.352	10.318	9.136	32.30	0.126
Co	0.016	-0.039	1.054	1.23	0.002	0.025	0.060	0.82	0.027
Cm	9.944	8.823	44.492	237.22	44.293	9.969	8.865	236.47	10.047
Correct Avg	10.607	9.180	0.001	87.45	10.532	10.332	9.220	32.69	0.098

System Bias Check End

Test Run 8 STRATA Version 3.2

	O2-Out %	CO2-O %	SO2-O ppm	NOx-O ppm	CO-O ppm	O2-In %	CO2-In %	SO2-In ppm	THC-O ppm
Begin calculating run averages									
08-28-2013 14:47:01	9.488	9.748	1.974	89.74	9.508	9.226	10.180	32.56	0.099
08-28-2013 14:48:01	9.634	9.553	1.714	108.07	9.448	9.352	10.265	25.86	0.176
08-28-2013 14:49:01	9.341	9.849	1.568	117.48	7.599	9.036	10.405	28.58	0.088
08-28-2013 14:50:02	9.362	9.868	1.357	105.24	6.550	9.059	10.445	25.97	0.091
08-28-2013 14:51:02	9.909	9.663	1.287	93.59	7.048	9.747	9.788	23.19	0.094
08-28-2013 14:52:02	10.091	9.262	1.154	89.88	6.508	9.793	9.881	23.41	0.118
08-28-2013 14:53:02	9.864	9.352	1.159	88.32	7.544	9.526	10.224	25.91	0.114
08-28-2013 14:54:02	9.656	9.755	1.041	96.74	8.957	9.398	10.138	28.88	0.103
08-28-2013 14:55:02	9.628	9.511	1.033	91.00	11.314	9.256	10.635	29.48	0.073
08-28-2013 14:56:02	8.960	10.380	1.045	108.20	11.963	8.651	10.690	35.11	0.060
08-28-2013 14:57:02	9.629	9.824	1.015	123.62	6.307	9.369	10.198	29.50	0.087
08-28-2013 14:58:02	10.345	9.310	0.979	83.67	5.477	10.181	9.538	26.83	0.079
08-28-2013 14:59:02	9.866	9.202	0.947	72.44	7.508	9.483	10.393	30.85	0.047
08-28-2013 15:00:02	9.480	9.943	0.908	81.69	10.089	9.224	10.147	32.39	0.099
08-28-2013 15:01:02	9.966	9.368	0.875	86.52	6.522	9.669	10.055	29.18	0.191
08-28-2013 15:02:02	9.934	9.456	0.909	83.38	6.607	9.669	10.003	32.93	0.120
08-28-2013 15:03:02	10.034	9.380	0.857	74.71	7.455	9.791	9.855	31.56	0.110
08-28-2013 15:04:02	9.829	9.329	0.837	75.34	7.377	9.487	10.171	33.73	0.101
08-28-2013 15:05:02	9.951	9.499	0.856	85.82	8.141	9.732	9.863	35.45	0.129
08-28-2013 15:06:02	9.980	9.251	0.887	77.58	7.693	9.609	10.220	34.84	0.298
08-28-2013 15:07:02	9.951	9.304	0.853	83.70	9.155	9.287	10.208	37.54	0.111
08-28-2013 15:08:02	10.443	9.242	0.772	76.79	8.596	10.278	9.246	33.14	0.127
08-28-2013 15:09:02	10.426	8.843	0.772	70.21	9.622	10.067	9.924	32.68	0.125
08-28-2013 15:10:02	9.176	9.817	0.736	98.74	11.809	8.766	10.762	40.72	0.128
Run Averages	O2-Out %	CO2-O %	SO2-O ppm	NOx-O ppm	CO-O ppm	O2-In %	CO2-In %	SO2-In ppm	THC-O ppm
08-28-2013 15:10:02	9.789	9.530	1.064	90.10	8.283	9.486	10.135	30.85	0.115

Operator: Phil Juneau
Plant Name: Covanta Huntington RRF
Location: Unit 2
Test Run 8 End

Final System Bias Check, Run 8 STRATA Version 3.2
Operator: Phil Juneau
Plant Name: Covanta Huntington RRF
Location: Unit 2

Reference Cylinder Numbers

	Zero	Span
O2-Out		CC366298
CO2-O		CC366298
SO2-O		CC326338
NOx-O		SG9152406BAL
CO-O		CC177291
O2-In		CC366298
CO2-In		CC366298
SO2-In		CC33466
THC-O		CC432372

Date/Time 08-28-2013 15:21:44 PASSED

Analyte	O2-Out	CO2-O	SO2-O	NOx-O	CO-O	O2-In	CO2-In	SO2-In	THC-O
Units	%	%	ppm	ppm	ppm	%	%	ppm	ppm
Zero Ref Cyl	0.000	0.000	0.000	0.00	0.000	0.000	0.000	0.00	0.000
Zero Cal	-0.012	-0.036	-0.110	-0.21	0.211	0.004	-0.007	0.45	-0.002
Zero Avg	0.012	-0.036	0.687	1.04	0.033	0.014	0.092	1.32	0.066
Zero Bias%	0.1%	0.0%	0.9%	0.3%	0.2%	0.0%	0.5%	0.2%	0.2%
Zero Drift%	0.0%	0.0%	-0.3%	0.0%	0.2%	0.0%	0.2%	0.1%	0.1%
Span Ref Cyl	9.982	8.945	47.160	234.70	45.070	9.982	8.945	244.70	9.944
Span Cal	10.005	8.876	48.344	232.92	45.119	10.070	8.910	247.72	10.144
Span Avg	9.945	8.854	44.796	236.56	44.379	9.957	8.980	236.70	9.975
Span Bias%	0.3%	0.1%	3.9%	0.8%	0.8%	0.5%	0.4%	2.2%	0.6%
Span Drift%	0.0%	0.2%	0.1%	-0.2%	0.1%	0.0%	0.7%	0.1%	0.0%
Ini Zero Avg	0.012	-0.040	0.979	1.20	-0.132	0.017	0.048	0.75	0.043
Ini Span Avg	9.942	8.816	44.659	237.44	44.295	9.966	8.859	236.45	9.970
Run Avg	9.789	9.530	1.064	90.10	8.283	9.486	10.135	30.85	0.115
Co	0.012	-0.038	0.833	1.12	-0.049	0.016	0.070	1.03	0.055
Cm	9.943	8.835	44.728	237.00	44.337	9.962	8.919	236.57	9.972
Correct Avg	9.827	9.645	0.248	88.53	8.461	9.504	10.174	30.97	0.061

System Bias Check End

Test Run 9 STRATA Version 3.2

	O2-Out	CO2-O	SO2-O	NOx-O	CO-O	O2-In	CO2-In	SO2-In	THC-O
	%	%	ppm	ppm	ppm	%	%	ppm	ppm
Begin calculating run averages									
08-28-2013 15:28:02	10.229	9.004	2.024	77.41	7.586	9.984	9.828	43.78	0.087
08-28-2013 15:29:02	9.704	9.415	1.612	96.12	9.704	9.391	10.172	49.92	0.091
08-28-2013 15:30:02	9.751	9.542	1.259	100.43	9.053	9.473	10.113	50.86	0.069
08-28-2013 15:31:02	9.971	9.229	1.165	98.29	8.392	9.672	10.122	48.40	0.069
08-28-2013 15:32:02	9.557	9.613	0.919	98.73	7.950	9.247	10.319	56.63	0.058
08-28-2013 15:33:02	9.563	9.603	0.923	99.06	8.151	9.281	10.346	55.94	0.037
08-28-2013 15:34:02	9.817	9.600	0.800	105.16	7.155	9.691	9.945	53.82	0.043
08-28-2013 15:35:02	9.871	9.264	0.741	102.48	6.565	9.491	10.145	63.79	0.031
08-28-2013 15:36:02	9.804	9.407	0.647	85.75	6.007	9.570	9.964	72.59	0.046
08-28-2013 15:37:02	10.443	9.109	0.691	63.41	5.566	10.420	9.193	70.65	0.022
08-28-2013 15:38:02	10.697	8.758	0.609	57.22	6.343	10.292	9.493	76.87	0.042
08-28-2013 15:39:02	10.077	9.081	0.556	76.72	8.155	9.804	9.861	86.92	0.024
08-28-2013 15:40:02	9.210	9.532	0.631	140.51	8.945	8.428	11.258	96.71	0.028
08-28-2013 15:41:02	9.955	10.218	0.600	140.47	5.857	9.425	9.879	86.09	0.122
08-28-2013 15:42:02	11.333	8.578	0.558	69.43	3.464	11.201	8.573	65.11	0.059
08-28-2013 15:43:02	10.963	8.592	0.540	53.47	6.404	10.359	9.586	90.23	0.038
08-28-2013 15:44:03	9.527	9.392	0.502	88.50	9.725	9.075	10.508	96.43	0.032
08-28-2013 15:45:03	9.681	9.663	0.535	93.70	7.823	9.455	10.188	88.75	0.035
08-28-2013 15:46:03	9.924	9.479	0.568	77.35	7.530	9.795	9.821	88.51	0.033
08-28-2013 15:47:03	10.686	8.971	0.578	63.88	8.506	10.529	9.264	76.16	0.040
08-28-2013 15:48:03	10.089	9.016	0.502	80.91	10.740	9.664	10.013	81.65	0.048
08-28-2013 15:49:03	10.505	9.148	0.462	90.61	10.111	10.431	9.308	67.73	0.066
08-28-2013 15:50:03	10.037	9.015	0.428	82.48	10.478	9.535	10.204	73.35	0.051
08-28-2013 15:51:03	10.208	9.336	0.420	90.81	10.139	10.209	9.410	62.08	0.032
Run Averages	O2-Out	CO2-O	SO2-O	NOx-O	CO-O	O2-In	CO2-In	SO2-In	THC-O
	%	%	ppm	ppm	ppm	%	%	ppm	ppm
08-28-2013 15:51:03	10.067	9.273	0.761	88.87	7.931	9.768	9.896	70.96	0.050

Operator: Phil Juneau
Plant Name: Covanta Huntington RRF
Location: Unit 2
Test Run 9 End

Final System Bias Check, Run 9 STRATA Version 3.2
Operator: Phil Juneau
Plant Name: Covanta Huntington RRF
Location: Unit 2

Reference Cylinder Numbers

	Zero	Span
O2-Out		CC366298
CO2-O		CC366298
SO2-O		CC326338
NOx-O		SG9152406BAL
CO-O		CC177291
O2-In		CC366298
CO2-In		CC366298
SO2-In		CC33466
THC-O		CC432372

Date/Time 08-28-2013 16:02:09 PASSED

Analyte	O2-Out	CO2-O	SO2-O	NOx-O	CO-O	O2-In	CO2-In	SO2-In	THC-O
Units	%	%	ppm	ppm	ppm	%	%	ppm	ppm
Zero Ref Cyl	0.000	0.000	0.000	0.00	0.000	0.000	0.000	0.00	0.000
Zero Cal	-0.012	-0.036	-0.110	-0.21	0.211	0.004	-0.007	0.45	-0.002
Zero Avg	0.011	-0.036	0.269	1.13	0.033	0.006	0.167	0.38	0.104
Zero Bias%	0.1%	0.0%	0.4%	0.3%	0.2%	0.0%	1.0%	0.0%	0.4%
Zero Drift%	0.0%	0.0%	-0.5%	0.0%	0.0%	0.0%	0.4%	-0.2%	0.1%
Span Ref Cyl	9.982	8.945	47.160	234.70	45.070	9.982	8.945	244.70	9.944
Span Cal	10.005	8.876	48.344	232.92	45.119	10.070	8.910	247.72	10.144
Span Avg	9.945	8.825	44.047	236.68	44.408	9.937	9.018	235.66	9.943
Span Bias%	0.3%	0.3%	4.7%	0.8%	0.8%	0.6%	0.6%	2.5%	0.7%
Span Drift%	0.0%	-0.2%	-0.8%	0.0%	0.0%	-0.1%	0.2%	-0.2%	-0.1%
Ini Zero Avg	0.012	-0.036	0.687	1.04	0.033	0.014	0.092	1.32	0.066
Ini Span Avg	9.945	8.854	44.796	236.56	44.379	9.957	8.980	236.70	9.975
Run Avg	10.067	9.273	0.761	88.87	7.931	9.768	9.896	70.96	0.050
Co	0.011	-0.036	0.478	1.09	0.033	0.010	0.130	0.85	0.085
Cm	9.945	8.840	44.421	236.62	44.393	9.947	8.999	236.18	9.959
Correct Avg	10.104	9.382	0.304	87.47	8.024	9.802	9.850	72.90	-0.035

System Bias Check End

Test Run 10 STRATA Version 3.2

	O2-Out	CO2-O	SO2-O	NOx-O	CO-O	O2-In	CO2-In	SO2-In	THC-O
	%	%	ppm	ppm	ppm	%	%	ppm	ppm
Begin calculating run averages									
08-28-2013 16:09:03	9.626	9.544	1.653	91.64	6.649	9.247	10.345	35.07	0.055
08-28-2013 16:10:03	9.423	9.781	1.317	80.09	8.316	9.289	10.197	34.76	0.092
08-28-2013 16:11:03	10.203	9.261	0.960	66.18	10.662	10.062	9.546	31.16	0.054
08-28-2013 16:12:03	9.736	9.191	0.727	78.43	10.636	9.371	10.113	35.58	0.063
08-28-2013 16:13:03	9.993	9.252	0.660	82.82	9.759	9.664	9.939	34.28	0.045
08-28-2013 16:14:03	9.287	9.512	0.568	93.57	8.295	8.805	10.603	41.27	0.052
08-28-2013 16:15:03	9.498	9.783	0.492	100.90	7.709	9.301	10.196	41.45	0.079
08-28-2013 16:16:03	9.691	9.534	0.365	96.61	8.796	9.506	10.035	43.17	0.086
08-28-2013 16:17:03	10.025	9.209	0.354	88.07	9.812	9.651	10.064	41.18	0.075
08-28-2013 16:18:03	9.294	9.634	0.364	100.12	9.104	9.008	10.366	46.35	0.056
08-28-2013 16:19:03	9.904	9.471	0.324	73.32	7.753	9.726	9.791	47.38	0.034
08-28-2013 16:20:03	10.601	8.997	0.322	64.53	9.912	10.537	9.119	49.28	0.065
08-28-2013 16:21:03	10.726	8.750	0.269	71.65	12.730	10.219	9.598	59.80	0.067
08-28-2013 16:22:03	9.809	9.226	0.209	100.65	16.845	9.397	10.252	66.65	0.065
08-28-2013 16:23:03	8.875	9.898	0.294	120.61	15.985	8.258	11.258	105.26	0.073
08-28-2013 16:24:03	9.307	10.385	0.232	100.00	14.282	9.536	9.861	89.84	0.060
08-28-2013 16:25:03	10.663	8.997	0.141	80.41	10.207	10.505	9.205	80.77	0.075
08-28-2013 16:26:03	10.545	8.837	0.256	85.58	14.015	10.152	9.607	90.49	0.077
08-28-2013 16:27:03	10.258	9.011	0.142	80.53	17.089	9.894	9.865	97.71	0.061
08-28-2013 16:28:03	9.717	9.450	0.188	85.79	20.064	9.365	10.345	99.66	0.053
08-28-2013 16:29:03	9.338	9.783	0.203	103.52	17.061	8.923	10.716	106.71	0.085
08-28-2013 16:30:03	9.303	9.986	0.178	109.63	14.626	9.040	10.589	97.74	0.107
08-28-2013 16:31:03	9.560	9.863	0.177	105.08	11.684	9.367	10.311	92.93	0.163
08-28-2013 16:32:03	10.369	9.205	0.265	76.96	11.424	9.126	10.610	101.25	0.207
Run Averages	O2-Out	CO2-O	SO2-O	NOx-O	CO-O	O2-In	CO2-In	SO2-In	THC-O
	%	%	ppm	ppm	ppm	%	%	ppm	ppm
08-28-2013 16:32:03	9.823	9.440	0.444	89.03	11.809	9.498	10.105	65.41	0.077

Operator: Phil Juneau
Plant Name: Covanta Huntington RRF
Location: Unit 2
Test Run 10 End

Final System Bias Check, Run 10 STRATA Version 3.2
Operator: Phil Juneau
Plant Name: Covanta Huntington RRF
Location: Unit 2

Reference Cylinder Numbers

	Zero	Span
O2-Out		CC366298
CO2-O		CC366298
SO2-O		CC326338
NOx-O		SG9152406BAL
CO-O		CC177291
O2-In		CC366298
CO2-In		CC366298
SO2-In		CC33466
THC-O		CC432372

Date/Time 08-28-2013 16:47:10 PASSED

Analyte	O2-Out	CO2-O	SO2-O	NOx-O	CO-O	O2-In	CO2-In	SO2-In	THC-O
Units	%	%	ppm	ppm	ppm	%	%	ppm	ppm
Zero Ref Cyl	0.000	0.000	0.000	0.00	0.000	0.000	0.000	0.00	0.000
Zero Cal	-0.012	-0.036	-0.110	-0.21	0.211	0.004	-0.007	0.45	-0.002
Zero Avg	0.012	-0.037	0.029	1.09	-0.094	0.016	0.133	0.24	0.047
Zero Bias%	0.1%	0.0%	0.2%	0.3%	0.3%	0.1%	0.8%	0.0%	0.2%
Zero Drift%	0.0%	0.0%	-0.3%	0.0%	-0.1%	0.0%	-0.2%	0.0%	-0.2%
Span Ref Cyl	9.982	8.945	47.160	234.70	45.070	9.982	8.945	244.70	9.944
Span Cal	10.005	8.876	48.344	232.92	45.119	10.070	8.910	247.72	10.144
Span Avg	9.938	8.835	44.203	236.03	44.350	9.970	8.977	235.98	10.020
Span Bias%	0.3%	0.2%	4.5%	0.6%	0.8%	0.5%	0.4%	2.4%	0.4%
Span Drift%	0.0%	0.1%	0.2%	-0.1%	-0.1%	0.1%	-0.2%	0.1%	0.3%
Ini Zero Avg	0.011	-0.036	0.269	1.13	0.033	0.006	0.167	0.38	0.104
Ini Span Avg	9.945	8.825	44.047	236.68	44.408	9.937	9.018	235.66	9.943
Run Avg	9.823	9.440	0.444	89.03	11.809	9.498	10.105	65.41	0.077
Co	0.011	-0.037	0.149	1.11	-0.030	0.011	0.150	0.31	0.075
Cm	9.942	8.830	44.125	236.36	44.379	9.953	8.998	235.82	9.981
Correct Avg	9.863	9.560	0.316	87.71	12.015	9.525	10.065	67.64	0.002

System Bias Check End

Calibration Error Test, Run 1 STRATA Version 3.2
Operator: Phil Juneau
Plant Name: Covanta Huntington RRF
Location: Unit 3

Reference Cylinder Numbers

	Zero	Low-range	Mid-range	High-range
O2-Out		CC427661	CC366298	CC175833
CO2-O		CC427661	CC366298	CC175833
SO2-O		CC39675	CC326338	FF4708
NOx-O		CC323813	SG9152406BAL	CC120144
CO-O		CC36020	CC177291	FF35824
O2-In		CC427661	CC366298	CC175833
CO2-In		CC427661	CC366298	CC175833
SO2-In		CC283725	CC33466	CC220121
THC-O		CC432372	FF27519	FF14840

Date/Time 08-29-2013 07:44:45 PASSED

Analyte	O2-Out	CO2-O	SO2-O	NOx-O	CO-O	O2-In	CO2-In	SO2-In	THC-O
Units	%	%	ppm	ppm	ppm	%	%	ppm	ppm
Zero Ref Cyl	0.000	0.000	0.000	0.00	0.000	0.000	0.000	0.00	0.000
Zero Avg	-0.023	-0.035	-0.227	-0.27	0.095	0.002	0.003	0.00	0.042
Zero Error%	0.1%	0.2%	0.2%	0.1%	0.1%	0.0%	0.0%	0.0%	0.1%
Low Ref Cyl									9.944
Low Avg									10.391
Low Error%									1.5%
Mid Ref Cyl	9.982	8.945	47.160	234.70	45.070	9.982	8.945	244.70	15.030
Mid Avg	10.032	8.852	48.027	232.17	45.099	10.077	8.922	246.60	15.398
Mid Error%	0.2%	0.5%	0.9%	0.5%	0.0%	0.4%	0.1%	0.4%	1.2%
High Ref Cyl	21.910	18.040	91.830	484.80	91.380	21.910	18.040	491.60	24.270
High Avg	22.060	18.381	92.125	484.39	91.338	22.084	18.129	490.97	24.238
High Error%	0.7%	1.9%	0.3%	0.1%	0.0%	0.8%	0.5%	0.1%	0.1%

Calibration Error Test End

Initial System Bias Check, Run 1 STRATA Version 3.2
Operator: Phil Juneau
Plant Name: Covanta Huntington RRF
Location: Unit 3

Reference Cylinder Numbers

	Zero	Span
O2-Out		CC366298
CO2-O		CC366298
SO2-O		CC326338
NOx-O		SG9152406BAL
CO-O		CC177291
O2-In		CC366298
CO2-In		CC366298
SO2-In		CC33466
THC-O		CC432372

Date/Time 08-29-2013 07:56:10 PASSED

Analyte	O2-Out	CO2-O	SO2-O	NOx-O	CO-O	O2-In	CO2-In	SO2-In	THC-O
Units	%	%	ppm	ppm	ppm	%	%	ppm	ppm
Zero Ref Cyl	0.000	0.000	0.000	0.00	0.000	0.000	0.000	0.00	0.000
Zero Cal	-0.023	-0.035	-0.227	-0.27	0.095	0.002	0.003	0.00	0.042
Zero Avg	-0.014	-0.035	0.643	0.87	-0.270	0.015	-0.014	-0.38	0.067
Zero Bias%	0.0%	0.0%	0.9%	0.2%	0.4%	0.1%	0.1%	0.1%	0.1%
Zero Drift%									
Span Ref Cyl	9.982	8.945	47.160	234.70	45.070	9.982	8.945	244.70	9.944
Span Cal	10.032	8.852	48.027	232.17	45.099	10.077	8.922	246.60	10.391
Span Avg	9.953	8.839	43.974	231.74	44.270	10.000	8.814	236.93	10.222
Span Bias%	0.4%	0.1%	4.4%	0.1%	0.9%	0.4%	0.6%	2.0%	0.6%
Span Drift%									

System Bias Check End

Test Run 1 STRATA Version 3.2

	O2-Out	CO2-O	SO2-O	NOx-O	CO-O	O2-In	CO2-In	SO2-In	THC-O
	%	%	ppm	ppm	ppm	%	%	ppm	ppm
Begin calculating run averages									
08-29-2013 08:04:02	11.040	8.792	1.612	86.80	16.363	10.813	8.681	41.50	0.153
08-29-2013 08:05:02	11.402	8.533	1.302	73.61	14.428	11.065	8.456	41.82	0.133
08-29-2013 08:06:02	11.090	8.571	1.296	61.96	15.598	10.689	8.793	48.75	0.108
08-29-2013 08:07:02	11.117	8.648	1.199	58.92	17.883	10.789	8.681	48.87	0.091
08-29-2013 08:08:02	10.811	8.700	1.168	70.81	17.732	10.389	9.026	53.49	0.098
08-29-2013 08:09:02	11.057	8.683	1.154	96.51	16.623	10.658	8.862	49.48	0.104
08-29-2013 08:10:02	10.895	8.741	1.157	82.97	11.252	10.688	8.690	51.34	0.088
08-29-2013 08:11:02	11.464	8.535	1.115	57.83	12.630	11.127	8.370	48.78	0.090
08-29-2013 08:12:02	11.319	8.541	1.103	71.58	15.631	10.961	8.487	48.74	0.129
08-29-2013 08:13:02	12.555	8.185	1.121	77.15	13.534	10.575	8.934	50.17	0.171
08-29-2013 08:14:02	10.652	8.606	1.117	79.50	19.351	10.252	9.188	53.22	0.093
08-29-2013 08:15:02	10.848	8.834	1.108	86.67	20.441	10.609	8.797	45.67	0.106
08-29-2013 08:16:02	11.305	8.584	1.182	70.23	17.185	10.949	8.537	45.60	0.097
08-29-2013 08:17:02	11.258	8.564	1.101	68.86	17.057	10.812	8.640	45.81	0.108
08-29-2013 08:18:02	10.967	8.658	1.156	84.33	15.211	10.548	8.903	49.72	0.106
08-29-2013 08:19:02	10.733	8.760	1.141	89.51	13.971	10.289	9.057	51.63	0.100
08-29-2013 08:20:02	11.079	8.703	1.191	86.26	15.970	10.756	8.731	49.31	0.103
08-29-2013 08:21:02	10.651	8.723	1.208	94.63	19.914	10.167	9.235	52.12	0.101
08-29-2013 08:22:02	10.094	9.080	1.165	99.96	21.401	9.646	9.629	59.27	0.092
08-29-2013 08:23:02	10.428	8.946	1.161	93.27	16.916	10.034	9.293	57.29	0.091
08-29-2013 08:24:02	10.681	8.856	1.231	76.95	15.807	10.378	8.931	56.66	0.069
08-29-2013 08:25:02	11.017	8.703	1.141	72.41	18.960	10.699	8.662	53.96	0.057
08-29-2013 08:26:02	10.724	8.687	1.188	71.39	19.756	10.164	9.220	62.58	0.049
08-29-2013 08:27:02	10.339	8.966	1.279	79.04	22.281	10.008	9.265	63.19	0.046
Run Averages	O2-Out	CO2-O	SO2-O	NOx-O	CO-O	O2-In	CO2-In	SO2-In	THC-O
	%	%	ppm	ppm	ppm	%	%	ppm	ppm
08-29-2013 08:27:02	10.980	8.692	1.192	78.80	16.912	10.544	8.878	51.21	0.099

Operator: Phil Juneau
Plant Name: Covanta Huntington RRF
Location: Unit 3
Test Run 1 End

Final System Bias Check, Run 1 STRATA Version 3.2
Operator: Phil Juneau
Plant Name: Covanta Huntington RRF
Location: Unit 3

Reference Cylinder Numbers

	Zero	Span
O2-Out		CC366298
CO2-O		CC366298
SO2-O		CC326338
NOx-O		SG9152406BAL
CO-O		CC177291
O2-In		CC366298
CO2-In		CC366298
SO2-In		CC33466
THC-O		CC432372

Date/Time 08-29-2013 08:36:45 PASSED

Analyte	O2-Out	CO2-O	SO2-O	NOx-O	CO-O	O2-In	CO2-In	SO2-In	THC-O
Units	%	%	ppm	ppm	ppm	%	%	ppm	ppm
Zero Ref Cyl	0.000	0.000	0.000	0.00	0.000	0.000	0.000	0.00	0.000
Zero Cal	-0.023	-0.035	-0.227	-0.27	0.095	0.002	0.003	0.00	0.042
Zero Avg	0.004	-0.039	1.297	1.22	-0.412	0.019	-0.151	-0.02	0.078
Zero Bias%	0.1%	0.0%	1.7%	0.3%	0.6%	0.1%	0.9%	0.0%	0.1%
Zero Drift%	0.1%	0.0%	0.7%	0.1%	-0.2%	0.0%	-0.8%	0.1%	0.0%
Span Ref Cyl	9.982	8.945	47.160	234.70	45.070	9.982	8.945	244.70	9.944
Span Cal	10.032	8.852	48.027	232.17	45.099	10.077	8.922	246.60	10.391
Span Avg	9.979	8.825	43.889	236.51	44.086	10.017	8.617	237.40	9.902
Span Bias%	0.2%	0.1%	4.5%	0.9%	1.1%	0.3%	1.7%	1.9%	1.6%
Span Drift%	0.1%	-0.1%	-0.1%	1.0%	-0.2%	0.1%	-1.1%	0.1%	-1.1%
Ini Zero Avg	-0.014	-0.035	0.643	0.87	-0.270	0.015	-0.014	-0.38	0.067
Ini Span Avg	9.953	8.839	43.974	231.74	44.270	10.000	8.814	236.93	10.222
Run Avg	10.980	8.692	1.192	78.80	16.912	10.544	8.878	51.21	0.099
Co	-0.005	-0.037	0.970	1.04	-0.341	0.017	-0.083	-0.20	0.072
Cm	9.966	8.832	43.932	234.12	44.178	10.009	8.716	237.16	10.062
Correct Avg	10.998	8.803	0.243	78.29	17.467	10.517	9.110	53.00	0.027

System Bias Check End

Test Run 2 STRATA Version 3.2

	O2-Out	CO2-O	SO2-O	NOx-O	CO-O	O2-In	CO2-In	SO2-In	THC-O
	%	%	ppm	ppm	ppm	%	%	ppm	ppm
Begin calculating run averages									
08-29-2013 08:46:23	11.491	8.509	2.971	75.91	32.694	11.222	8.052	59.91	0.189
08-29-2013 08:47:23	11.821	8.301	2.616	74.26	35.248	10.904	8.431	59.54	0.195
08-29-2013 08:48:23	11.361	8.519	2.435	76.96	39.168	11.023	8.241	61.70	0.157
08-29-2013 08:49:23	11.190	8.484	2.262	80.79	40.795	10.680	8.626	65.03	0.136
08-29-2013 08:50:23	10.871	8.677	2.154	77.27	33.663	10.445	8.781	70.51	0.119
08-29-2013 08:51:23	11.084	8.645	2.102	90.35	25.616	10.757	8.466	60.63	0.133
08-29-2013 08:52:23	11.305	8.521	2.133	96.24	23.662	10.958	8.261	57.17	0.123
08-29-2013 08:53:23	11.032	8.522	1.996	77.83	26.442	10.531	8.707	59.77	0.099
08-29-2013 08:54:22	10.939	8.668	1.982	78.03	26.088	10.639	8.506	58.85	0.094
08-29-2013 08:55:22	11.214	8.545	2.022	77.06	21.933	10.868	8.349	56.59	0.090
08-29-2013 08:56:22	11.150	8.542	1.949	76.17	22.392	10.721	8.520	62.34	0.079
08-29-2013 08:57:22	11.263	8.581	2.023	78.37	21.175	11.018	8.210	61.27	0.080
08-29-2013 08:58:22	11.585	8.401	2.034	77.59	21.972	11.182	8.138	58.55	0.080
08-29-2013 08:59:22	10.945	8.550	2.038	86.99	24.720	10.416	8.879	63.57	0.073
08-29-2013 09:00:22	10.770	8.743	1.959	87.51	25.041	10.391	8.824	64.65	0.081
08-29-2013 09:01:22	10.716	8.718	1.979	90.99	18.798	10.336	8.836	66.98	0.082
08-29-2013 09:02:22	11.049	8.646	2.099	79.30	17.173	10.726	8.505	66.31	0.071
08-29-2013 09:03:22	11.317	8.552	2.013	73.30	22.049	11.030	8.223	63.65	0.079
08-29-2013 09:04:22	11.596	8.418	2.091	66.77	25.174	11.226	8.039	59.17	0.086
08-29-2013 09:05:22	11.444	8.422	2.112	70.49	19.886	11.043	8.215	64.94	0.082
08-29-2013 09:06:22	10.885	8.570	2.092	75.18	19.264	10.387	8.841	72.44	0.066
08-29-2013 09:07:22	10.831	8.722	2.254	77.39	19.388	10.497	8.704	68.01	0.063
08-29-2013 09:08:22	11.162	8.631	2.284	82.67	22.381	10.891	8.333	58.90	0.073
08-29-2013 09:09:22	11.448	8.462	2.314	81.33	19.868	11.101	8.156	56.30	0.075
Run Averages	O2-Out	CO2-O	SO2-O	NOx-O	CO-O	O2-In	CO2-In	SO2-In	THC-O
	%	%	ppm	ppm	ppm	%	%	ppm	ppm
08-29-2013 09:09:22	11.187	8.556	2.164	79.53	25.196	10.792	8.451	62.37	0.100

Operator: Phil Juneau
Plant Name: Covanta Huntington RRF
Location: Unit 3
Test Run 2 End

Final System Bias Check, Run 2 STRATA Version 3.2
Operator: Phil Juneau
Plant Name: Covanta Huntington RRF
Location: Unit 3

Reference Cylinder Numbers

	Zero	Span
O2-Out		CC366298
CO2-O		CC366298
SO2-O		CC326338
NOx-O		SG9152406BAL
CO-O		CC177291
O2-In		CC366298
CO2-In		CC366298
SO2-In		CC33466
THC-O		CC432372

Date/Time 08-29-2013 09:18:27 PASSED

Analyte	O2-Out	CO2-O	SO2-O	NOx-O	CO-O	O2-In	CO2-In	SO2-In	THC-O
Units	%	%	ppm	ppm	ppm	%	%	ppm	ppm
Zero Ref Cyl	0.000	0.000	0.000	0.00	0.000	0.000	0.000	0.00	0.000
Zero Cal	-0.023	-0.035	-0.227	-0.27	0.095	0.002	0.003	0.00	0.042
Zero Avg	-0.003	-0.036	1.827	1.31	-0.378	0.015	-0.181	-0.23	0.059
Zero Bias%	0.1%	0.0%	2.2%	0.3%	0.5%	0.1%	1.0%	0.0%	0.1%
Zero Drift%	0.0%	0.0%	0.6%	0.0%	0.0%	0.0%	-0.2%	0.0%	-0.1%
Span Ref Cyl	9.982	8.945	47.160	234.70	45.070	9.982	8.945	244.70	9.944
Span Cal	10.032	8.852	48.027	232.17	45.099	10.077	8.922	246.60	10.391
Span Avg	9.982	8.786	44.063	236.46	44.094	10.016	8.604	238.57	9.904
Span Bias%	0.2%	0.4%	4.3%	0.9%	1.1%	0.3%	1.8%	1.6%	1.6%
Span Drift%	0.0%	-0.2%	0.2%	0.0%	0.0%	0.0%	-0.1%	0.2%	0.0%
Ini Zero Avg	0.004	-0.039	1.297	1.22	-0.412	0.019	-0.151	-0.02	0.078
Ini Span Avg	9.979	8.825	43.889	236.51	44.086	10.017	8.617	237.40	9.902
Run Avg	11.187	8.556	2.164	79.53	25.196	10.792	8.451	62.37	0.100
Co	0.001	-0.037	1.562	1.26	-0.395	0.017	-0.166	-0.12	0.068
Cm	9.981	8.806	43.976	236.49	44.090	10.017	8.611	237.98	9.903
Correct Avg	11.188	8.693	0.669	78.09	25.927	10.756	8.783	64.22	0.032

System Bias Check End

Test Run 3 STRATA Version 3.2

	O2-Out	CO2-O	SO2-O	NOx-O	CO-O	O2-In	CO2-In	SO2-In	THC-O
	%	%	ppm	ppm	ppm	%	%	ppm	ppm
Begin calculating run averages									
08-29-2013 09:29:11	10.951	8.686	2.395	86.82	17.590	10.585	8.799	49.05	0.056
08-29-2013 09:30:11	11.092	8.663	2.348	88.00	18.784	10.742	8.630	42.02	0.060
08-29-2013 09:31:11	11.294	8.592	2.320	74.32	16.314	10.941	8.482	45.88	0.047
08-29-2013 09:32:11	10.807	8.669	2.261	67.39	17.685	10.293	9.099	55.88	0.027
08-29-2013 09:33:11	10.966	8.750	2.216	55.94	17.385	10.646	8.713	49.81	0.029
08-29-2013 09:34:11	11.147	8.648	2.222	53.39	19.115	10.753	8.667	47.28	0.029
08-29-2013 09:35:11	11.114	8.664	2.164	72.27	17.355	10.859	8.484	45.35	0.041
08-29-2013 09:36:11	11.552	8.490	2.150	79.07	14.836	11.172	8.271	43.97	0.055
08-29-2013 09:37:10	11.275	8.534	2.187	90.91	16.856	10.874	8.516	45.12	0.059
08-29-2013 09:38:10	11.018	8.620	2.141	89.71	16.786	10.471	8.995	50.05	0.048
08-29-2013 09:39:10	10.576	8.834	2.157	85.33	17.635	10.199	9.199	51.46	0.037
08-29-2013 09:40:10	10.795	8.822	2.107	76.18	14.841	10.484	8.904	47.49	0.037
08-29-2013 09:41:10	11.174	8.684	2.164	72.78	15.833	10.872	8.527	46.06	0.064
08-29-2013 09:42:10	11.214	8.574	2.164	78.88	15.645	10.764	8.672	46.59	0.064
08-29-2013 09:43:10	10.757	8.720	2.165	89.54	18.384	10.284	9.067	48.99	0.059
08-29-2013 09:44:10	10.826	8.820	2.226	85.18	17.195	10.542	8.875	49.82	0.058
08-29-2013 09:45:10	10.917	8.724	2.182	80.66	16.685	10.474	8.938	51.13	0.056
08-29-2013 09:46:10	10.757	8.784	2.129	79.28	16.489	10.390	8.948	54.19	0.058
08-29-2013 09:47:10	10.866	8.739	2.159	75.69	15.820	10.379	9.005	54.29	0.061
08-29-2013 09:48:10	10.847	8.788	2.153	81.62	15.502	10.590	8.704	52.59	0.069
08-29-2013 09:49:10	10.755	8.670	2.264	95.63	13.333	10.102	9.292	47.08	0.067
08-29-2013 09:50:10	10.424	8.956	2.227	96.03	14.534	10.129	9.109	45.43	0.064
08-29-2013 09:51:10	10.841	8.789	2.197	78.30	12.492	10.571	8.742	45.05	0.068
08-29-2013 09:52:10	11.233	8.610	2.120	72.23	12.453	10.875	8.541	40.20	0.074
Run Averages	O2-Out	CO2-O	SO2-O	NOx-O	CO-O	O2-In	CO2-In	SO2-In	THC-O
	%	%	ppm	ppm	ppm	%	%	ppm	ppm
08-29-2013 09:52:10	10.966	8.701	2.201	79.38	16.232	10.583	8.799	48.12	0.054

Operator: Phil Juneau
Plant Name: Covanta Huntington RRF
Location: Unit 3
Test Run 3 End

Final System Bias Check, Run 3 STRATA Version 3.2
Operator: Phil Juneau
Plant Name: Covanta Huntington RRF
Location: Unit 3

Reference Cylinder Numbers

	Zero	Span
O2-Out		CC366298
CO2-O		CC366298
SO2-O		CC326338
NOx-O		SG9152406BAL
CO-O		CC177291
O2-In		CC366298
CO2-In		CC366298
SO2-In		CC33466
THC-O		CC432372

Date/Time 08-29-2013 10:00:57 PASSED

Analyte	O2-Out	CO2-O	SO2-O	NOx-O	CO-O	O2-In	CO2-In	SO2-In	THC-O
Units	%	%	ppm	ppm	ppm	%	%	ppm	ppm
Zero Ref Cyl	0.000	0.000	0.000	0.00	0.000	0.000	0.000	0.00	0.000
Zero Cal	-0.023	-0.035	-0.227	-0.27	0.095	0.002	0.003	0.00	0.042
Zero Avg	0.002	-0.039	2.171	1.30	-0.325	0.015	-0.188	-0.23	0.012
Zero Bias%	0.1%	0.0%	2.6%	0.3%	0.5%	0.1%	1.1%	0.0%	0.1%
Zero Drift%	0.0%	0.0%	0.4%	0.0%	0.1%	0.0%	0.0%	0.0%	-0.2%
Span Ref Cyl	9.982	8.945	47.160	234.70	45.070	9.982	8.945	244.70	9.944
Span Cal	10.032	8.852	48.027	232.17	45.099	10.077	8.922	246.60	10.391
Span Avg	9.977	8.808	44.506	236.21	44.168	10.012	8.594	239.49	9.912
Span Bias%	0.3%	0.2%	3.8%	0.8%	1.0%	0.3%	1.8%	1.4%	1.6%
Span Drift%	0.0%	0.1%	0.5%	-0.1%	0.1%	0.0%	-0.1%	0.2%	0.0%
Ini Zero Avg	-0.003	-0.036	1.827	1.31	-0.378	0.015	-0.181	-0.23	0.059
Ini Span Avg	9.982	8.786	44.063	236.46	44.094	10.016	8.604	238.57	9.904
Run Avg	10.966	8.701	2.201	79.38	16.232	10.583	8.799	48.12	0.054
Co	-0.001	-0.037	1.999	1.31	-0.351	0.015	-0.184	-0.23	0.035
Cm	9.979	8.797	44.284	236.34	44.131	10.014	8.599	239.03	9.908
Correct Avg	10.969	8.848	0.225	77.96	16.802	10.550	9.149	49.45	0.018

System Bias Check End

Test Run 4 STRATA Version 3.2

	O2-Out	CO2-O	SO2-O	NOx-O	CO-O	O2-In	CO2-In	SO2-In	THC-O
	%	%	ppm	ppm	ppm	%	%	ppm	ppm
Begin calculating run averages									
08-29-2013 10:08:02	10.704	8.765	3.225	83.88	11.930	10.191	9.211	35.89	0.019
08-29-2013 10:09:02	10.914	8.834	2.990	83.20	13.554	10.664	8.839	32.06	0.024
08-29-2013 10:10:02	10.651	8.793	2.795	88.67	14.704	10.126	9.345	34.94	0.013
08-29-2013 10:11:02	10.367	9.026	2.683	83.85	13.541	10.021	9.330	40.22	0.006
08-29-2013 10:12:02	10.753	8.850	2.519	80.38	14.495	10.414	8.988	39.06	0.016
08-29-2013 10:13:02	10.828	8.786	2.527	87.15	15.459	10.476	8.923	41.41	0.021
08-29-2013 10:14:02	10.898	8.745	2.479	87.08	16.206	10.507	8.922	39.48	0.022
08-29-2013 10:15:02	10.721	8.767	2.393	89.54	15.608	10.267	9.115	38.46	0.019
08-29-2013 10:16:02	10.711	8.839	2.490	92.99	13.853	10.326	9.031	38.05	0.024
08-29-2013 10:17:02	10.590	8.824	2.402	107.44	14.462	10.102	9.293	40.25	0.023
08-29-2013 10:18:02	10.456	8.934	2.375	102.99	13.223	10.116	9.220	40.49	0.016
08-29-2013 10:19:02	10.164	8.980	2.406	94.70	11.959	9.649	9.619	39.85	-0.006
08-29-2013 10:20:02	10.016	9.211	2.368	93.51	11.316	9.569	9.674	39.96	-0.013
08-29-2013 10:21:02	10.080	9.208	2.385	88.57	9.046	9.695	9.562	38.78	-0.016
08-29-2013 10:22:02	10.208	9.059	2.330	81.30	7.113	9.827	9.468	39.72	-0.016
08-29-2013 10:23:02	9.896	9.199	2.384	94.38	7.839	9.400	9.822	39.87	-0.013
08-29-2013 10:24:02	10.132	9.300	2.345	98.08	7.809	9.885	9.318	39.41	-0.002
08-29-2013 10:25:02	11.228	8.745	2.330	55.97	7.634	11.067	8.249	31.53	0.003
08-29-2013 10:26:02	11.515	8.463	2.340	51.64	8.563	11.096	8.263	31.41	0.008
08-29-2013 10:27:02	10.903	8.585	2.322	92.38	10.752	10.352	8.967	38.01	0.014
08-29-2013 10:28:02	10.569	8.820	2.384	94.42	10.334	10.220	9.025	38.79	0.005
08-29-2013 10:29:02	10.774	8.779	2.324	67.53	11.088	10.486	8.746	43.22	-0.010
08-29-2013 10:30:02	11.147	8.621	2.423	51.32	12.535	10.789	8.572	38.87	-0.015
08-29-2013 10:31:02	10.931	8.676	2.335	65.00	14.240	10.549	8.780	38.58	-0.014
Run Averages	O2-Out	CO2-O	SO2-O	NOx-O	CO-O	O2-In	CO2-In	SO2-In	THC-O
	%	%	ppm	ppm	ppm	%	%	ppm	ppm
08-29-2013 10:31:02	10.632	8.867	2.482	84.00	11.969	10.241	9.095	38.26	0.005

Operator: Phil Juneau
Plant Name: Covanta Huntington RRF
Location: Unit 3
Test Run 4 End

Final System Bias Check, Run 4 STRATA Version 3.2
Operator: Phil Juneau
Plant Name: Covanta Huntington RRF
Location: Unit 3

Reference Cylinder Numbers

	Zero	Span
O2-Out		CC366298
CO2-O		CC366298
SO2-O		CC326338
NOx-O		SG9152406BAL
CO-O		CC177291
O2-In		CC366298
CO2-In		CC366298
SO2-In		CC33466
THC-O		CC432372

Date/Time 08-29-2013 10:42:49 PASSED

Analyte	O2-Out	CO2-O	SO2-O	NOx-O	CO-O	O2-In	CO2-In	SO2-In	THC-O
Units	%	%	ppm	ppm	ppm	%	%	ppm	ppm
Zero Ref Cyl	0.000	0.000	0.000	0.00	0.000	0.000	0.000	0.00	0.000
Zero Cal	-0.023	-0.035	-0.227	-0.27	0.095	0.002	0.003	0.00	0.042
Zero Avg	0.002	-0.038	2.319	1.24	-0.408	0.013	-0.197	-0.06	0.866
Zero Bias%	0.1%	0.0%	2.8%	0.3%	0.6%	0.1%	1.1%	0.0%	2.7%
Zero Drift%	0.0%	0.0%	0.2%	0.0%	-0.1%	0.0%	-0.1%	0.0%	2.8%
Span Ref Cyl	9.982	8.945	47.160	234.70	45.070	9.982	8.945	244.70	9.944
Span Cal	10.032	8.852	48.027	232.17	45.099	10.077	8.922	246.60	10.391
Span Avg	9.986	8.809	44.950	236.48	44.144	10.022	8.611	240.02	9.864
Span Bias%	0.2%	0.2%	3.4%	0.9%	1.0%	0.3%	1.7%	1.3%	1.8%
Span Drift%	0.0%	0.0%	0.5%	0.1%	0.0%	0.0%	0.1%	0.1%	-0.2%
Ini Zero Avg	0.002	-0.039	2.171	1.30	-0.325	0.015	-0.188	-0.23	0.012
Ini Span Avg	9.977	8.808	44.506	236.21	44.168	10.012	8.594	239.49	9.912
Run Avg	10.632	8.867	2.482	84.00	11.969	10.241	9.095	38.26	0.005
Co	0.002	-0.038	2.245	1.27	-0.367	0.014	-0.192	-0.14	0.439
Cm	9.981	8.809	44.728	236.34	44.156	10.017	8.602	239.76	9.888
Correct Avg	10.633	9.004	0.263	82.59	12.487	10.206	9.447	39.17	-0.456

System Bias Check End

Test Run 5 STRATA Version 3.2

	O2-Out %	CO2-O %	SO2-O ppm	NOx-O ppm	CO-O ppm	O2-In %	CO2-In %	SO2-In ppm	THC-O ppm
Begin calculating run averages									
08-29-2013 10:49:02	9.822	9.386	3.681	99.94	17.066	9.327	9.910	73.50	0.083
08-29-2013 10:50:02	9.801	9.453	3.397	119.16	14.873	9.457	9.734	59.27	0.084
08-29-2013 10:51:02	9.894	9.258	3.202	105.63	13.453	9.447	9.743	57.36	0.072
08-29-2013 10:52:02	10.480	9.091	3.051	68.61	13.447	10.247	9.006	59.90	0.064
08-29-2013 10:53:02	10.668	8.763	2.924	68.16	14.824	10.187	9.130	68.96	0.064
08-29-2013 10:54:02	10.603	8.856	2.894	83.03	17.755	10.240	9.086	72.10	0.067
08-29-2013 10:55:02	10.390	8.872	2.712	83.95	18.129	9.939	9.350	72.23	0.065
08-29-2013 10:56:02	10.463	8.906	2.814	80.72	17.135	10.078	9.219	70.93	0.087
08-29-2013 10:57:02	10.778	8.801	2.912	66.90	17.261	10.395	8.940	71.55	0.092
08-29-2013 10:58:02	10.857	8.746	2.947	55.11	18.232	10.419	8.984	72.82	0.088
08-29-2013 10:59:02	10.293	8.880	2.933	79.63	21.277	9.712	9.692	88.59	0.080
08-29-2013 11:00:02	9.915	9.372	3.021	107.31	20.243	9.567	9.653	105.97	0.090
08-29-2013 11:01:02	10.237	9.132	3.418	96.23	16.473	9.836	9.509	102.12	0.086
08-29-2013 11:02:02	10.347	9.033	3.688	75.40	18.974	10.045	9.286	110.69	0.090
08-29-2013 11:03:02	10.497	8.888	4.077	86.50	19.141	10.057	9.332	112.21	0.097
08-29-2013 11:04:02	10.259	9.047	4.762	89.06	18.492	9.874	9.441	136.67	0.095
08-29-2013 11:05:02	10.261	9.035	6.182	91.59	20.746	9.764	9.635	135.92	0.098
08-29-2013 11:06:02	10.603	9.042	6.748	83.34	22.161	10.339	9.069	128.03	0.108
08-29-2013 11:07:02	10.624	8.801	6.838	79.13	22.525	10.080	9.384	128.10	0.120
08-29-2013 11:08:02	10.374	9.043	7.316	78.85	26.450	10.017	9.382	139.92	0.125
08-29-2013 11:09:02	10.526	8.915	8.047	67.80	27.620	10.109	9.311	148.62	0.118
08-29-2013 11:10:02	10.687	8.873	8.657	74.07	29.935	10.306	9.134	152.32	0.129
08-29-2013 11:11:02	10.531	8.880	10.420	83.83	31.149	10.109	9.302	146.28	0.124
08-29-2013 11:12:02	10.219	8.977	10.196	101.14	24.982	9.667	9.694	136.75	0.120
Run Averages	O2-Out %	CO2-O %	SO2-O ppm	NOx-O ppm	CO-O ppm	O2-In %	CO2-In %	SO2-In ppm	THC-O ppm
08-29-2013 11:12:02	10.380	9.002	4.867	84.39	20.095	9.967	9.372	102.10	0.094

Operator: Phil Juneau
Plant Name: Covanta Huntington RRF
Location: Unit 3
Test Run 5 End

Final System Bias Check, Run 5 STRATA Version 3.2
Operator: Phil Juneau
Plant Name: Covanta Huntington RRF
Location: Unit 3

Reference Cylinder Numbers

	Zero	Span
O2-Out		CC366298
CO2-O		CC366298
SO2-O		CC326338
NOx-O		SG9152406BAL
CO-O		CC177291
O2-In		CC366298
CO2-In		CC366298
SO2-In		CC33466
THC-O		CC432372

Date/Time 08-29-2013 11:21:29 PASSED

Analyte	O2-Out	CO2-O	SO2-O	NOx-O	CO-O	O2-In	CO2-In	SO2-In	THC-O
Units	%	%	ppm	ppm	ppm	%	%	ppm	ppm
Zero Ref Cyl	0.000	0.000	0.000	0.00	0.000	0.000	0.000	0.00	0.000
Zero Cal	-0.023	-0.035	-0.227	-0.27	0.095	0.002	0.003	0.00	0.042
Zero Avg	0.004	-0.036	2.815	1.28	-0.301	0.014	-0.181	-0.07	0.050
Zero Bias%	0.1%	0.0%	3.3%	0.3%	0.4%	0.1%	1.0%	0.0%	0.0%
Zero Drift%	0.0%	0.0%	0.5%	0.0%	0.1%	0.0%	0.1%	0.0%	-2.7%
Span Ref Cyl	9.982	8.945	47.160	234.70	45.070	9.982	8.945	244.70	9.944
Span Cal	10.032	8.852	48.027	232.17	45.099	10.077	8.922	246.60	10.391
Span Avg	9.980	8.807	45.508	236.56	44.128	10.000	8.611	239.95	9.885
Span Bias%	0.2%	0.2%	2.7%	0.9%	1.1%	0.4%	1.7%	1.4%	1.7%
Span Drift%	0.0%	0.0%	0.6%	0.0%	0.0%	-0.1%	0.0%	0.0%	0.1%
Ini Zero Avg	0.002	-0.038	2.319	1.24	-0.408	0.013	-0.197	-0.06	0.866
Ini Span Avg	9.986	8.809	44.950	236.48	44.144	10.022	8.611	240.02	9.864
Run Avg	10.380	9.002	4.867	84.39	20.095	9.967	9.372	102.10	0.094
Co	0.003	-0.037	2.567	1.26	-0.355	0.014	-0.189	-0.06	0.458
Cm	9.983	8.808	45.229	236.52	44.136	10.011	8.611	239.98	9.875
Correct Avg	10.379	9.141	2.543	82.93	20.716	9.938	9.719	104.14	-0.385

System Bias Check End

Test Run 6 STRATA Version 3.2

	O2-Out	CO2-O	SO2-O	NOx-O	CO-O	O2-In	CO2-In	SO2-In	THC-O
	%	%	ppm	ppm	ppm	%	%	ppm	ppm
Begin calculating run averages									
08-29-2013 11:28:05	9.785	9.078	41.994	132.59	29.842	9.133	10.124	224.44	0.240
08-29-2013 11:29:05	9.141	9.849	37.832	119.36	23.631	8.628	10.482	212.62	0.205
08-29-2013 11:30:05	9.477	9.841	20.793	95.25	16.533	9.106	10.094	169.19	0.190
08-29-2013 11:31:05	9.320	9.774	13.509	99.44	14.940	8.903	10.173	170.28	0.179
08-29-2013 11:32:05	10.216	9.357	10.992	77.36	11.705	10.076	9.041	132.57	0.187
08-29-2013 11:33:05	11.451	8.629	8.737	50.92	10.568	11.424	7.809	109.13	0.203
08-29-2013 11:34:05	12.360	8.180	6.991	44.74	13.142	12.050	7.460	105.55	0.269
08-29-2013 11:35:05	11.218	8.330	5.959	75.37	18.677	10.457	9.004	143.25	0.212
08-29-2013 11:36:05	10.162	8.982	13.811	122.62	19.734	9.686	9.570	162.98	0.211
08-29-2013 11:37:05	9.998	9.155	29.470	120.75	16.470	9.504	9.793	151.16	0.199
08-29-2013 11:38:05	10.185	9.245	31.165	100.93	16.937	9.892	9.382	141.39	0.192
08-29-2013 11:39:05	10.587	8.917	22.324	76.72	17.439	10.266	9.016	152.28	0.189
08-29-2013 11:40:05	10.959	8.775	16.953	69.84	20.127	10.669	8.719	132.33	0.196
08-29-2013 11:41:05	10.449	8.794	12.221	92.27	19.168	9.893	9.448	118.70	0.190
08-29-2013 11:42:05	10.829	8.890	10.078	88.87	17.736	10.552	8.826	101.51	0.198
08-29-2013 11:43:05	10.514	8.805	8.611	84.04	20.275	9.945	9.499	101.40	0.185
08-29-2013 11:44:05	10.079	9.182	7.493	93.38	20.973	9.608	9.743	103.46	0.181
08-29-2013 11:45:05	9.386	9.521	6.558	117.47	17.092	8.760	10.448	109.78	0.166
08-29-2013 11:46:05	9.258	10.061	6.781	121.00	14.784	8.944	10.133	101.49	0.159
08-29-2013 11:47:05	10.764	9.189	6.416	77.21	12.918	10.670	8.613	77.51	0.164
08-29-2013 11:48:05	11.327	8.575	5.581	53.97	14.194	10.965	8.386	75.26	0.166
08-29-2013 11:49:05	11.243	8.543	5.200	69.46	18.723	10.701	8.779	82.00	0.174
08-29-2013 11:50:05	11.306	8.620	5.087	84.38	20.793	9.734	9.614	98.89	0.234
08-29-2013 11:51:05	9.593	8.984	5.123	95.71	20.409	9.430	9.931	95.81	0.135
Run Averages	O2-Out	CO2-O	SO2-O	NOx-O	CO-O	O2-In	CO2-In	SO2-In	THC-O
	%	%	ppm	ppm	ppm	%	%	ppm	ppm
08-29-2013 11:51:05	10.400	9.053	14.173	90.18	17.792	9.958	9.338	128.11	0.193

Operator: Phil Juneau
Plant Name: Covanta Huntington RRF
Location: Unit 3
Test Run 6 End

Final System Bias Check, Run 6 STRATA Version 3.2
Operator: Phil Juneau
Plant Name: Covanta Huntington RRF
Location: Unit 3

Reference Cylinder Numbers

	Zero	Span
O2-Out		CC366298
CO2-O		CC366298
SO2-O		CC326338
NOx-O		SG9152406BAL
CO-O		CC177291
O2-In		CC366298
CO2-In		CC366298
SO2-In		CC33466
THC-O		CC432372

Date/Time 08-29-2013 12:00:42 PASSED

Analyte	O2-Out	CO2-O	SO2-O	NOx-O	CO-O	O2-In	CO2-In	SO2-In	THC-O
Units	%	%	ppm	ppm	ppm	%	%	ppm	ppm
Zero Ref Cyl	0.000	0.000	0.000	0.00	0.000	0.000	0.000	0.00	0.000
Zero Cal	-0.023	-0.035	-0.227	-0.27	0.095	0.002	0.003	0.00	0.042
Zero Avg	0.005	-0.041	2.719	1.38	-0.356	0.013	-0.200	-0.88	0.076
Zero Bias%	0.1%	0.0%	3.2%	0.3%	0.5%	0.1%	1.1%	0.2%	0.1%
Zero Drift%	0.0%	0.0%	-0.1%	0.0%	-0.1%	0.0%	-0.1%	-0.2%	0.1%
Span Ref Cyl	9.982	8.945	47.160	234.70	45.070	9.982	8.945	244.70	9.944
Span Cal	10.032	8.852	48.027	232.17	45.099	10.077	8.922	246.60	10.391
Span Avg	9.984	8.799	45.992	236.78	44.246	10.016	8.602	240.26	9.964
Span Bias%	0.2%	0.3%	2.2%	1.0%	0.9%	0.3%	1.8%	1.3%	1.4%
Span Drift%	0.0%	0.0%	0.5%	0.0%	0.1%	0.1%	-0.1%	0.1%	0.3%
Ini Zero Avg	0.004	-0.036	2.815	1.28	-0.301	0.014	-0.181	-0.07	0.050
Ini Span Avg	9.980	8.807	45.508	236.56	44.128	10.000	8.611	239.95	9.885
Run Avg	10.400	9.053	14.173	90.18	17.792	9.958	9.338	128.11	0.193
Co	0.005	-0.038	2.767	1.33	-0.328	0.014	-0.191	-0.47	0.063
Cm	9.982	8.803	45.750	236.67	44.187	10.008	8.606	240.10	9.924
Correct Avg	10.400	9.198	12.514	88.61	18.346	9.931	9.689	130.78	0.131

System Bias Check End

Test Run 7 STRATA Version 3.2

	O2-Out %	CO2-O %	SO2-O ppm	NOx-O ppm	CO-O ppm	O2-In %	CO2-In %	SO2-In ppm	THC-O ppm
Begin calculating run averages									
08-29-2013 12:06:03	10.556	9.108	6.952	75.40	11.102	10.400	8.902	75.77	0.007
08-29-2013 12:07:03	11.139	8.662	6.214	49.03	12.267	10.752	8.708	73.91	0.006
08-29-2013 12:08:03	10.995	8.712	5.787	67.64	17.769	10.656	8.782	82.79	0.029
08-29-2013 12:09:03	10.754	8.743	5.451	86.57	17.088	10.252	9.160	92.50	0.038
08-29-2013 12:10:03	10.078	9.012	5.635	105.31	17.248	9.477	9.961	96.85	0.077
08-29-2013 12:11:03	10.259	9.303	6.146	85.99	16.998	10.005	9.341	89.50	0.087
08-29-2013 12:12:03	10.686	8.884	5.891	74.33	16.340	10.400	8.960	90.38	0.093
08-29-2013 12:13:03	11.136	8.673	6.171	69.90	17.244	10.689	8.831	91.20	0.101
08-29-2013 12:14:03	10.720	8.799	6.404	69.55	19.664	10.284	9.153	97.85	0.086
08-29-2013 12:15:03	10.589	8.865	6.402	79.84	18.787	10.206	9.170	100.98	0.090
08-29-2013 12:16:03	10.655	8.864	6.570	75.19	18.012	10.308	9.058	94.56	0.089
08-29-2013 12:17:03	11.201	8.735	6.086	59.30	19.126	10.952	8.440	85.54	0.095
08-29-2013 12:18:03	11.297	8.543	5.512	80.68	23.446	10.846	8.614	83.48	0.111
08-29-2013 12:19:03	10.895	8.678	5.313	101.02	25.345	10.411	9.073	91.94	0.112
08-29-2013 12:20:03	10.655	8.861	5.228	92.06	24.900	10.331	9.033	95.66	0.102
08-29-2013 12:21:03	11.232	8.699	5.183	67.91	21.861	10.993	8.430	81.01	0.110
08-29-2013 12:22:03	11.162	8.587	4.692	69.28	28.575	10.712	8.706	73.69	0.120
08-29-2013 12:23:03	10.805	8.734	4.425	86.85	29.246	10.360	9.030	79.64	0.109
08-29-2013 12:24:03	10.680	8.795	4.438	84.29	24.812	10.198	9.261	84.56	0.098
08-29-2013 12:25:03	10.374	8.966	4.432	86.71	21.165	9.992	9.369	85.92	0.089
08-29-2013 12:26:03	10.628	8.903	4.402	86.98	18.374	10.201	9.169	76.58	0.101
08-29-2013 12:27:03	11.043	8.777	4.286	71.60	24.507	10.803	8.571	69.14	0.111
08-29-2013 12:28:03	12.019	8.496	4.177	68.17	24.031	10.892	8.551	63.65	0.169
08-29-2013 12:29:03	10.852	8.517	3.949	91.78	21.186	10.410	9.000	63.55	0.119
Run Averages	O2-Out %	CO2-O %	SO2-O ppm	NOx-O ppm	CO-O ppm	O2-In %	CO2-In %	SO2-In ppm	THC-O ppm
08-29-2013 12:29:03	10.850	8.788	5.407	78.56	20.372	10.439	8.970	84.19	0.090

Operator: Phil Juneau
Plant Name: Covanta Huntington RRF
Location: Unit 3
Test Run 7 End

Final System Bias Check, Run 7 STRATA Version 3.2
Operator: Phil Juneau
Plant Name: Covanta Huntington RRF
Location: Unit 3

	Reference Cylinder Numbers Zero	Span
O2-Out		CC366298
CO2-O		CC366298
SO2-O		CC326338
NOx-O		SG9152406BAL
CO-O		CC177291
O2-In		CC366298
CO2-In		CC366298
SO2-In		CC33466
THC-O		CC432372

Date/Time 08-29-2013 12:42:26 PASSED

Analyte	O2-Out	CO2-O	SO2-O	NOx-O	CO-O	O2-In	CO2-In	SO2-In	THC-O
Units	%	%	ppm	ppm	ppm	%	%	ppm	ppm
Zero Ref Cyl	0.000	0.000	0.000	0.00	0.000	0.000	0.000	0.00	0.000
Zero Cal	-0.023	-0.035	-0.227	-0.27	0.095	0.002	0.003	0.00	0.042
Zero Avg	0.012	-0.036	2.650	1.16	-0.457	0.019	-0.200	-0.69	0.040
Zero Bias%	0.2%	0.0%	3.1%	0.3%	0.6%	0.1%	1.1%	0.1%	0.0%
Zero Drift%	0.0%	0.0%	-0.1%	0.0%	-0.1%	0.0%	0.0%	0.0%	-0.1%
Span Ref Cyl	9.982	8.945	47.160	234.70	45.070	9.982	8.945	244.70	9.944
Span Cal	10.032	8.852	48.027	232.17	45.099	10.077	8.922	246.60	10.391
Span Avg	9.999	8.815	45.983	236.90	44.123	10.024	8.592	239.80	9.969
Span Bias%	0.1%	0.2%	2.2%	1.0%	1.1%	0.2%	1.8%	1.4%	1.4%
Span Drift%	0.1%	0.1%	0.0%	0.0%	-0.1%	0.0%	-0.1%	-0.1%	0.0%
Ini Zero Avg	0.005	-0.041	2.719	1.38	-0.356	0.013	-0.200	-0.88	0.076
Ini Span Avg	9.984	8.799	45.992	236.78	44.246	10.016	8.602	240.26	9.964
Run Avg	10.850	8.788	5.407	78.56	20.372	10.439	8.970	84.19	0.090
Co	0.008	-0.038	2.684	1.27	-0.407	0.016	-0.200	-0.78	0.058
Cm	9.992	8.807	45.988	236.84	44.184	10.020	8.597	240.03	9.966
Correct Avg	10.840	8.926	2.965	77.00	21.002	10.400	9.324	86.34	0.032

System Bias Check End

Test Run 8 STRATA Version 3.2

	O2-Out	CO2-O	SO2-O	NOx-O	CO-O	O2-In	CO2-In	SO2-In	THC-O
	%	%	ppm	ppm	ppm	%	%	ppm	ppm
Begin calculating run averages									
08-29-2013 12:47:13	9.633	9.592	4.976	97.18	16.714	9.142	10.132	66.18	0.032
08-29-2013 12:48:13	9.585	9.651	4.337	88.81	14.477	9.119	10.141	71.47	0.012
08-29-2013 12:49:13	9.500	9.733	3.835	90.44	11.945	9.117	10.044	73.10	0.077
08-29-2013 12:50:13	10.490	9.276	3.594	92.58	11.670	10.267	9.088	60.37	0.098
08-29-2013 12:51:13	10.831	8.790	3.459	81.03	19.994	10.460	8.939	59.60	0.111
08-29-2013 12:52:13	10.863	8.744	3.248	73.04	20.678	10.420	8.980	67.86	0.118
08-29-2013 12:53:13	11.004	8.737	3.281	72.24	22.913	10.662	8.748	70.97	0.130
08-29-2013 12:54:13	10.817	8.719	3.284	80.92	18.559	10.389	8.945	72.39	0.127
08-29-2013 12:55:13	11.367	8.663	3.174	81.31	17.825	11.147	8.272	69.72	0.150
08-29-2013 12:56:13	11.762	8.426	3.150	78.12	18.566	11.438	8.036	69.05	0.153
08-29-2013 12:57:13	11.852	8.354	3.127	74.17	17.062	11.483	8.006	73.20	0.137
08-29-2013 12:58:13	11.703	8.392	3.280	67.20	18.079	11.320	8.123	84.29	0.118
08-29-2013 12:59:13	11.957	8.372	3.630	65.39	18.227	11.723	7.755	73.75	0.127
08-29-2013 13:00:13	12.429	8.179	3.941	69.68	19.829	12.140	7.438	67.10	0.141
08-29-2013 13:01:13	11.936	8.185	4.034	75.72	23.113	11.376	8.262	76.30	0.135
08-29-2013 13:02:12	11.195	8.572	4.205	87.29	23.040	10.786	8.742	95.16	0.130
08-29-2013 13:03:12	10.997	8.649	4.868	96.38	20.643	10.178	9.243	104.93	0.141
08-29-2013 13:04:12	10.435	8.849	5.622	94.66	18.728	9.893	9.569	108.53	0.107
08-29-2013 13:05:12	9.597	9.353	5.924	100.41	18.087	8.984	10.309	113.21	0.086
08-29-2013 13:06:12	9.786	9.688	5.858	86.92	16.120	9.474	9.844	104.35	0.117
08-29-2013 13:07:12	10.545	9.150	5.536	80.37	14.398	10.328	9.069	84.89	0.132
08-29-2013 13:08:12	11.310	8.705	5.123	65.25	11.539	11.158	8.256	78.70	0.136
08-29-2013 13:09:12	12.228	8.323	4.485	55.45	10.432	11.990	7.682	71.87	0.149
08-29-2013 13:10:12	11.585	8.339	3.942	68.25	15.556	11.089	8.460	91.33	0.129
Run Averages	O2-Out	CO2-O	SO2-O	NOx-O	CO-O	O2-In	CO2-In	SO2-In	THC-O
	%	%	ppm	ppm	ppm	%	%	ppm	ppm
08-29-2013 13:10:12	10.974	8.811	4.164	80.12	17.420	10.586	8.838	79.49	0.116

Operator: Phil Juneau
Plant Name: Covanta Huntington RRF
Location: Unit 3
Test Run 8 End

Final System Bias Check, Run 8 STRATA Version 3.2
Operator: Phil Juneau
Plant Name: Covanta Huntington RRF
Location: Unit 3

Reference Cylinder Numbers

	Zero	Span
O2-Out		CC366298
CO2-O		CC366298
SO2-O		CC326338
NOx-O		SG9152406BAL
CO-O		CC177291
O2-In		CC366298
CO2-In		CC366298
SO2-In		CC33466
THC-O		CC432372

Date/Time 08-29-2013 13:22:25 PASSED

Analyte	O2-Out	CO2-O	SO2-O	NOx-O	CO-O	O2-In	CO2-In	SO2-In	THC-O
Units	%	%	ppm	ppm	ppm	%	%	ppm	ppm
Zero Ref Cyl	0.000	0.000	0.000	0.00	0.000	0.000	0.000	0.00	0.000
Zero Cal	-0.023	-0.035	-0.227	-0.27	0.095	0.002	0.003	0.00	0.042
Zero Avg	0.004	-0.044	3.098	1.07	-0.272	0.016	-0.157	-0.06	0.102
Zero Bias%	0.1%	0.0%	3.6%	0.3%	0.4%	0.1%	0.9%	0.0%	0.2%
Zero Drift%	0.0%	0.0%	0.5%	0.0%	0.2%	0.0%	0.2%	0.1%	0.2%
Span Ref Cyl	9.982	8.945	47.160	234.70	45.070	9.982	8.945	244.70	9.944
Span Cal	10.032	8.852	48.027	232.17	45.099	10.077	8.922	246.60	10.391
Span Avg	9.982	8.822	46.175	235.31	44.154	10.024	8.668	241.28	10.088
Span Bias%	0.2%	0.2%	2.0%	0.6%	1.0%	0.2%	1.4%	1.1%	1.0%
Span Drift%	-0.1%	0.0%	0.2%	-0.3%	0.0%	0.0%	0.4%	0.3%	0.4%
Ini Zero Avg	0.012	-0.036	2.650	1.16	-0.457	0.019	-0.200	-0.69	0.040
Ini Span Avg	9.999	8.815	45.983	236.90	44.123	10.024	8.592	239.80	9.969
Run Avg	10.974	8.811	4.164	80.12	17.420	10.586	8.838	79.49	0.116
Co	0.008	-0.040	2.874	1.12	-0.365	0.017	-0.179	-0.37	0.071
Cm	9.991	8.818	46.079	236.10	44.138	10.024	8.630	240.54	10.029
Correct Avg	10.965	8.937	1.407	78.91	18.012	10.542	9.156	81.12	0.045

System Bias Check End

Test Run 9 STRATA Version 3.2

	O2-Out %	CO2-O %	SO2-O ppm	NOx-O ppm	CO-O ppm	O2-In %	CO2-In %	SO2-In ppm	THC-O ppm
Begin calculating run averages									
08-29-2013 13:27:02	10.316	8.866	9.006	90.11	12.849	9.827	9.473	96.34	0.100
08-29-2013 13:28:02	10.743	8.886	7.939	93.60	12.405	10.506	8.898	79.31	0.140
08-29-2013 13:29:02	10.904	8.708	6.395	98.08	15.734	10.503	8.905	76.19	0.130
08-29-2013 13:30:02	10.605	8.743	5.634	79.79	14.222	10.097	9.315	84.28	0.105
08-29-2013 13:31:02	10.535	8.902	5.300	86.68	14.084	10.209	9.194	86.66	0.106
08-29-2013 13:32:02	10.479	8.867	5.108	97.51	14.537	10.106	9.243	78.29	0.103
08-29-2013 13:33:02	10.938	8.737	4.596	92.61	15.526	10.577	8.904	75.35	0.102
08-29-2013 13:34:02	10.888	8.738	4.351	101.69	19.257	10.541	8.880	71.45	0.104
08-29-2013 13:35:02	10.663	8.711	4.232	90.98	17.404	10.091	9.444	72.74	0.074
08-29-2013 13:36:02	10.312	9.047	4.105	81.36	16.391	10.017	9.304	70.33	0.066
08-29-2013 13:37:02	10.554	8.826	4.063	71.80	15.475	10.117	9.266	65.04	0.062
08-29-2013 13:38:02	10.444	8.863	3.799	87.54	17.732	9.993	9.434	70.38	0.066
08-29-2013 13:39:02	10.064	9.092	3.685	99.33	17.441	9.664	9.607	63.64	0.062
08-29-2013 13:40:02	10.403	8.985	3.764	92.22	14.658	10.003	9.338	57.30	0.073
08-29-2013 13:41:02	11.429	8.738	3.568	78.64	14.775	10.245	9.119	53.53	0.164
08-29-2013 13:42:02	10.836	8.471	3.235	79.99	12.200	9.958	9.452	56.18	0.078
08-29-2013 13:43:02	10.292	8.965	3.075	91.39	12.566	9.967	9.383	59.68	0.081
08-29-2013 13:44:02	10.510	8.870	3.090	83.37	12.792	10.104	9.248	57.66	0.085
08-29-2013 13:45:02	10.602	8.824	3.011	74.13	13.028	10.203	9.216	60.67	0.079
08-29-2013 13:46:02	10.527	8.837	2.993	80.74	12.909	10.121	9.282	60.08	0.074
08-29-2013 13:47:02	10.682	8.819	2.941	86.31	13.074	10.342	9.089	58.13	0.094
08-29-2013 13:48:02	10.730	8.759	2.792	86.82	16.625	10.278	9.184	58.44	0.123
08-29-2013 13:49:02	10.461	8.848	2.788	90.64	19.473	10.036	9.397	66.60	0.120
08-29-2013 13:50:02	9.943	9.142	2.747	95.11	15.859	9.500	9.793	80.06	0.111
Run Averages	O2-Out %	CO2-O %	SO2-O ppm	NOx-O ppm	CO-O ppm	O2-In %	CO2-In %	SO2-In ppm	THC-O ppm
08-29-2013 13:50:02	10.577	8.843	4.262	87.94	15.041	10.125	9.266	69.10	0.096

Operator: Phil Juneau
Plant Name: Covanta Huntington RRF
Location: Unit 3
Test Run 9 End

Final System Bias Check, Run 9 STRATA Version 3.2
Operator: Phil Juneau
Plant Name: Covanta Huntington RRF
Location: Unit 3

Reference Cylinder Numbers

	Zero	Span
O2-Out		CC366298
CO2-O		CC366298
SO2-O		CC326338
NOx-O		SG9152406BAL
CO-O		CC177291
O2-In		CC366298
CO2-In		CC366298
SO2-In		CC33466
THC-O		CC432372

Date/Time 08-29-2013 13:59:38 PASSED

Analyte	O2-Out	CO2-O	SO2-O	NOx-O	CO-O	O2-In	CO2-In	SO2-In	THC-O
Units	%	%	ppm	ppm	ppm	%	%	ppm	ppm
Zero Ref Cyl	0.000	0.000	0.000	0.00	0.000	0.000	0.000	0.00	0.000
Zero Cal	-0.023	-0.035	-0.227	-0.27	0.095	0.002	0.003	0.00	0.042
Zero Avg	0.004	-0.040	2.353	1.30	-0.327	0.024	-0.120	-0.70	0.174
Zero Bias%	0.1%	0.0%	2.8%	0.3%	0.5%	0.1%	0.7%	0.1%	0.4%
Zero Drift%	0.0%	0.0%	-0.8%	0.0%	-0.1%	0.0%	0.2%	-0.1%	0.2%
Span Ref Cyl	9.982	8.945	47.160	234.70	45.070	9.982	8.945	244.70	9.944
Span Cal	10.032	8.852	48.027	232.17	45.099	10.077	8.922	246.60	10.391
Span Avg	9.980	8.834	45.890	235.29	44.161	10.024	8.714	240.13	9.906
Span Bias%	0.2%	0.1%	2.3%	0.6%	1.0%	0.2%	1.2%	1.3%	1.6%
Span Drift%	0.0%	0.1%	-0.3%	0.0%	0.0%	0.0%	0.3%	-0.2%	-0.6%
Ini Zero Avg	0.004	-0.044	3.098	1.07	-0.272	0.016	-0.157	-0.06	0.102
Ini Span Avg	9.982	8.822	46.175	235.31	44.154	10.024	8.668	241.28	10.088
Run Avg	10.577	8.843	4.262	87.94	15.041	10.125	9.266	69.10	0.096
Co	0.004	-0.042	2.726	1.19	-0.299	0.020	-0.138	-0.38	0.138
Cm	9.981	8.828	46.032	235.30	44.157	10.024	8.691	240.71	9.997
Correct Avg	10.579	8.961	1.672	86.97	15.552	10.083	9.527	70.52	-0.043

System Bias Check End

Test Run 10 STRATA Version 3.2

	O2-Out	CO2-O	SO2-O	NOx-O	CO-O	O2-In	CO2-In	SO2-In	THC-O
	%	%	ppm	ppm	ppm	%	%	ppm	ppm
Begin calculating run averages									
08-29-2013 14:06:03	11.712	8.471	3.922	48.41	11.292	11.425	8.131	52.19	0.085
08-29-2013 14:07:03	10.875	8.535	3.489	84.17	15.107	10.159	9.421	63.71	0.077
08-29-2013 14:08:03	10.047	9.116	3.464	120.18	16.409	9.638	9.752	70.84	0.078
08-29-2013 14:09:03	9.920	9.225	3.613	93.69	13.945	9.257	10.139	70.18	0.052
08-29-2013 14:10:03	9.813	9.551	3.520	81.13	12.210	9.500	9.918	64.54	0.038
08-29-2013 14:11:03	10.188	9.276	3.348	76.83	10.245	9.911	9.515	58.10	0.038
08-29-2013 14:12:03	10.270	8.984	3.219	71.61	9.148	9.788	9.681	59.39	0.020
08-29-2013 14:13:03	10.397	9.117	3.068	79.80	8.329	10.195	9.254	57.73	0.027
08-29-2013 14:14:03	11.023	8.764	2.900	74.73	7.772	10.772	8.798	49.68	0.035
08-29-2013 14:15:03	10.678	8.694	2.783	84.37	8.843	10.001	9.508	59.56	0.031
08-29-2013 14:16:03	10.454	8.948	2.702	95.65	10.206	10.101	9.420	62.99	0.029
08-29-2013 14:17:03	10.109	9.082	2.701	86.63	11.082	9.641	9.814	66.46	0.010
08-29-2013 14:18:03	9.925	9.338	2.794	89.05	10.754	9.497	9.928	66.24	0.005
08-29-2013 14:19:03	9.772	9.410	2.864	110.25	9.903	9.239	10.187	69.81	0.016
08-29-2013 14:20:03	9.856	9.619	2.959	107.74	10.589	9.640	9.714	67.38	0.023
08-29-2013 14:21:03	10.433	8.994	2.925	82.46	8.600	10.039	9.428	62.98	0.016
08-29-2013 14:22:03	10.383	8.937	2.827	94.36	8.840	9.992	9.478	63.52	0.019
08-29-2013 14:23:03	10.450	8.917	2.780	99.91	10.187	10.033	9.473	58.07	0.023
08-29-2013 14:24:03	10.090	9.092	2.714	87.75	10.046	9.629	9.795	65.26	0.016
08-29-2013 14:25:03	10.339	9.080	2.521	75.04	8.897	10.030	9.425	67.77	0.020
08-29-2013 14:26:03	10.319	8.962	2.602	80.15	9.818	9.923	9.560	69.14	0.022
08-29-2013 14:27:03	10.303	9.054	2.626	80.72	11.211	9.998	9.446	62.51	0.028
08-29-2013 14:28:03	10.613	8.868	2.710	79.31	10.525	10.255	9.251	58.05	0.038
08-29-2013 14:29:03	10.774	8.801	2.668	73.99	8.844	10.388	9.105	65.57	0.050
Run Averages	O2-Out	CO2-O	SO2-O	NOx-O	CO-O	O2-In	CO2-In	SO2-In	THC-O
	%	%	ppm	ppm	ppm	%	%	ppm	ppm
08-29-2013 14:29:03	10.365	9.034	2.989	85.72	10.534	9.961	9.505	62.98	0.033

Operator: Phil Juneau
Plant Name: Covanta Huntington RRF
Location: Unit 3
Test Run 10 End

Final System Bias Check, Run 10 STRATA Version 3.2
Operator: Phil Juneau
Plant Name: Covanta Huntington RRF
Location: Unit 3

Reference Cylinder Numbers

	Zero	Span
O2-Out		CC366298
CO2-O		CC366298
SO2-O		CC326338
NOx-O		SG9152406BAL
CO-O		CC177291
O2-In		CC366298
CO2-In		CC366298
SO2-In		CC33466
THC-O		CC432372

Date/Time 08-29-2013 14:38:30 PASSED

Analyte	O2-Out	CO2-O	SO2-O	NOx-O	CO-O	O2-In	CO2-In	SO2-In	THC-O
Units	%	%	ppm	ppm	ppm	%	%	ppm	ppm
Zero Ref Cyl	0.000	0.000	0.000	0.00	0.000	0.000	0.000	0.00	0.000
Zero Cal	-0.023	-0.035	-0.227	-0.27	0.095	0.002	0.003	0.00	0.042
Zero Avg	0.013	-0.042	2.100	1.30	-0.274	0.016	-0.100	-0.97	0.060
Zero Bias%	0.2%	0.0%	2.5%	0.3%	0.4%	0.1%	0.6%	0.2%	0.1%
Zero Drift%	0.0%	0.0%	-0.3%	0.0%	0.1%	0.0%	0.1%	-0.1%	-0.4%
Span Ref Cyl	9.982	8.945	47.160	234.70	45.070	9.982	8.945	244.70	9.944
Span Cal	10.032	8.852	48.027	232.17	45.099	10.077	8.922	246.60	10.391
Span Avg	9.977	8.801	45.374	235.21	44.155	10.018	8.726	239.96	9.951
Span Bias%	0.3%	0.3%	2.9%	0.6%	1.0%	0.3%	1.1%	1.4%	1.5%
Span Drift%	0.0%	-0.2%	-0.6%	0.0%	0.0%	0.0%	0.1%	0.0%	0.1%
Ini Zero Avg	0.004	-0.040	2.353	1.30	-0.327	0.024	-0.120	-0.70	0.174
Ini Span Avg	9.980	8.834	45.890	235.29	44.161	10.024	8.714	240.13	9.906
Run Avg	10.365	9.034	2.989	85.72	10.534	9.961	9.505	62.98	0.033
Co	0.008	-0.041	2.227	1.30	-0.300	0.020	-0.110	-0.83	0.117
Cm	9.978	8.817	45.632	235.25	44.158	10.021	8.720	240.04	9.929
Correct Avg	10.369	9.164	0.828	84.69	10.983	9.922	9.740	64.82	-0.085

System Bias Check End

Calibration Error Test, Run 11 STRATA Version 3.2
Operator: Phil Juneau
Plant Name: Covanta Huntington RRF
Location: Unit 3

Reference Cylinder Numbers

	Zero	Low-range	Mid-range	High-range
NOx-O		CC323813	SG9152406BAL	CC120144

Date/Time 08-29-2013 15:12:28 PASSED

Analyte	NOx-O
Units	ppm
Zero Ref Cyl	0.00
Zero Avg	0.22
Zero Error%	0.0%
Low Ref Cyl	~~50.60~~
Low Avg	47.70 Conv. eff.
Low Error%	0.6%
Mid Ref Cyl	234.70
Mid Avg	235.85
Mid Error%	0.2%
High Ref Cyl	484.80
High Avg	484.15
High Error%	0.1%

Calibration Error Test End

APPENDIX C

Source CEMS Data Printouts

O_2, CO_2, SO_2, NO_x, and CO

Economizer Rata Report

✓

R#1

COVANTA ENERGY

Company: Covanta Huntington, Inc.
Report Name: UNIT #1 ECON RATA

Start of Report: 08/27/2013 09:05
End of Report: 08/27/2013 09:28

Validation: Valid Data Only

	SO2e	CO2e	O2e
Group#-Channel#	G8-C6	G8-C2	G8-C1
Long Descrip.	U-1 SO2 E	U-1 CO2 E	U-1 O2 Ec
Short Descrip.	SO2e	CO2e	O2e
Units	ppm	%	%
Range	0-500	0-20	0-25
08/27/2013 09:05	53	9.1	10.2
08/27/2013 09:06	61	9.1	10.1
08/27/2013 09:07	67	8.7	10.3
08/27/2013 09:08	72	8.8	10.3
08/27/2013 09:09	77	8.8	10.3
08/27/2013 09:10	72	8.4	10.8
08/27/2013 09:11	72	8.5	10.7
08/27/2013 09:12	78	9.2	9.9
08/27/2013 09:13	82	9.3	9.7
08/27/2013 09:14	73	8.5	10.6
08/27/2013 09:15	67	8.6	10.6
08/27/2013 09:16	69	8.3	11.0
08/27/2013 09:17	70	8.5	10.7
08/27/2013 09:18	78	9.3	9.8
08/27/2013 09:19	88	9.2	9.9
08/27/2013 09:20	88	9.5	9.7
08/27/2013 09:21	101	9.9	9.1
08/27/2013 09:22	97	9.6	9.4
08/27/2013 09:23	85	9.5	9.5
08/27/2013 09:24	83	9.6	9.4
08/27/2013 09:25	81	9.4	9.7
08/27/2013 09:26	77	9.3	9.8
08/27/2013 09:27	71	8.8	10.3
08/27/2013 09:28	66	9.0	10.2
Raw Average =	76	9.0	10.0
O2 Corrected Avg. =	97		
Period % Recovery =	100.0	100.0	100.0

Date/Time Printed: 08/27/2013 09:31

R#1

Stack Rata Report

COVANTA ENERGY

Company: Covanta Huntington, Inc.
Report Name: UNIT #1 STACK RATA

Start of Report: 08/27/2013 09:05
End of Report: 08/27/2013 09:28

Validation: Valid Data Only

	NOxs	SO2S	COlow	COhigh	CO2	O2	Steam Flow
Group#-Channel#	G8-C10	G8-C9	G8-C3	G8-C5	G8-C8	G8-C7	G8-C19
Long Descrip.	U-1 NOx S	U-1 SO2 S	U-1 CO St	U-1 CO Se	U-1 CO2 S	U-1 O2 St	U-1 Steam
Short Descrip.	NOxs	SO2s	COs LoRng	COs	CO2s	O2s	Steam
Units	ppm	ppm	ppm	ppm	%	%	K#/Hr
Range	0-500	0-200	0-200	0-2000	0-20	0-25	0-100
08/27/2013 09:05	86.0	0	25	25	8.4	11.2	80.0
08/27/2013 09:06	97.0	0	23	23	8.5	11.1	80.0
08/27/2013 09:07	79.0	0	21	21	8.2	11.4	80.0
08/27/2013 09:08	63.0	0	23	23	8.2	11.4	79.0
08/27/2013 09:09	75.0	0	22	22	8.3	11.3	79.0
08/27/2013 09:10	72.0	0	19	19	7.8	11.8	78.0
08/27/2013 09:11	67.0	0	23	23	7.9	11.7	78.0
08/27/2013 09:12	83.0	0	29	29	8.5	11.0	79.0
08/27/2013 09:13	91.0	0	23	23	8.8	10.8	79.0
08/27/2013 09:14	78.0	0	19	19	8.1	11.6	78.0
08/27/2013 09:15	77.0	0	22	22	8.0	11.7	78.0
08/27/2013 09:16	72.0	0	20	20	7.8	12.0	77.0
08/27/2013 09:17	69.0	0	23	23	7.9	11.7	77.0
08/27/2013 09:18	82.0	0	26	26	8.6	10.9	77.0
08/27/2013 09:19	86.0	0	18	18	8.6	11.0	78.0
08/27/2013 09:20	85.0	0	17	17	8.8	10.7	79.0
08/27/2013 09:21	93.0	0	17	17	9.2	10.3	80.0
08/27/2013 09:22	112.0	0	14	14	9.0	10.5	81.0
08/27/2013 09:23	110.0	0	14	14	8.9	10.6	82.0
08/27/2013 09:24	98.0	0	15	15	9.0	10.5	82.0
08/27/2013 09:25	86.0	0	15	15	8.8	10.7	82.0
08/27/2013 09:26	80.0	0	16	16	8.7	10.9	81.0
08/27/2013 09:27	70.0	0	16	16	8.3	11.3	81.0
08/27/2013 09:28	69.0	0	18	18	8.4	11.2	80.0
Raw Average =	82	0	19.9	19.9	8.4	11.1	79.3
O2 Corrected Avg. =	117	0	28	28			
Lbs./Hour Avg. =	28.62	0.00	4.20				
Period % Recovery =	100.0	100.0	100.0	100.0	100.0	100.0	100.0

Date/Time Printed: 08/27/2013 09:30

Economizer Rata Report

R #2

COVANTA ENERGY

Company: Covanta Huntington, Inc.
Report Name: UNIT #1 ECON RATA

Start of Report: 08/27/2013 09:47
End of Report: 08/27/2013 10:10 **Validation:** Valid Data Only

	SO2e		CO2e	O2e	
Group#-Channel#	G8-C6		G8-C2	G8-C1	
Long Descrip.	U-1 SO2 E		U-1 CO2 E	U-1 O2 Ec	
Short Descrip.	SO2e		CO2e	O2e	
Units	ppm		%	%	
Range	0-500		0-20	0-25	
08/27/2013 09:47	101		9.9	9.0	
08/27/2013 09:48	103		9.0	9.9	
08/27/2013 09:49	84		8.2	10.9	
08/27/2013 09:50	96		8.5	10.6	
08/27/2013 09:51	109		9.0	9.9	
08/27/2013 09:52	114		9.2	9.8	
08/27/2013 09:53	125		9.2	9.8	
08/27/2013 09:54	119		8.3	10.6	
08/27/2013 09:55	101		8.1	10.9	
08/27/2013 09:56	135		9.3	9.5	
08/27/2013 09:57	141		8.6	10.3	
08/27/2013 09:58	109		8.0	10.9	
08/27/2013 09:59	99		8.7	10.2	
08/27/2013 10:00					
08/27/2013 10:01			6.1		
08/27/2013 10:02	62	<	7.8	10.8	<
08/27/2013 10:03	64		8.5	10.4	
08/27/2013 10:04	69		9.1	9.7	
08/27/2013 10:05	60		8.1	11.0	
08/27/2013 10:06	55		7.7	11.4	
08/27/2013 10:07	57		7.7	11.5	
08/27/2013 10:08	73		8.7	10.4	
08/27/2013 10:09	91		9.1	10.1	
08/27/2013 10:10	109		9.0	10.1	
08/27/2013 10:10					
Raw Average =	94		8.5	10.3	
O2 Corrected Avg. =	124				
Period % Recovery =	95.7		100.0	95.7	

Date/Time Printed: 08/27/2013 10:34

R42

Stack Rata Report

COVANTA ENERGY

Company: Covanta Huntington, Inc.
Report Name: UNIT #1 STACK RATA

Start of Report: 08/27/2013 09:47
End of Report: 08/27/2013 10:10 **Validation:** Valid Data Only

	NOxs	SO2S	COlow	COhigh	CO2	O2	Steam Flow
Group#-Channel#	G8-C10	G8-C9	G8-C3	G8-C5	G8-C8	G8-C7	G8-C19
Long Descrip.	U-1 NOx S	U-1 SO2 S	U-1 CO St	U-1 CO Se	U-1 CO2 S	U-1 O2 St	U-1 Steam
Short Descrip.	NOxs	SO2s	COs LoRng	COs	CO2s	O2s	Steam
Units	ppm	ppm	ppm	ppm	%	%	K#/Hr
Range	0-500	0-200	0-200	0-2000	0-20	0-25	0-100
08/27/2013 09:47	99.0	0	9	9	9.0	10.2	85.0
08/27/2013 09:48	96.0	0	6	6	8.6	10.9	84.0
08/27/2013 09:49	36.0	0	4	4	7.7	11.9	83.0
08/27/2013 09:50	40.0	0	9	9	7.9	11.6	83.0
08/27/2013 09:51	86.0	0	8	8	8.5	11.0	83.0
08/27/2013 09:52	103.0	0	8	8	8.5	10.9	84.0
08/27/2013 09:53	95.0	0	9	9	8.6	10.9	84.0
08/27/2013 09:54	57.0	0	8	8	7.9	11.6	83.0
08/27/2013 09:55	39.0	0	9	9	7.4	11.9	84.0
08/27/2013 09:56	95.0	0	10	10	8.6	10.6	84.0
08/27/2013 09:57	95.0	4	7	7	8.1	11.3	84.0
08/27/2013 09:58	58.0	6	6	6	7.4	11.9	83.0
08/27/2013 09:59	71.0	5	8	8	8.1	11.3	83.0
08/27/2013 10:00							
08/27/2013 10:01							
08/27/2013 10:02	73.0	< 3	< 9	< 9	< 7.5	11.8	< 82.0
08/27/2013 10:03	83.0	3	8	8	8.0	11.4	82.0
08/27/2013 10:04	115.0	2	8	8	8.6	10.8	82.0
08/27/2013 10:05	80.0	2	6	6	7.7	11.9	81.0
08/27/2013 10:06	57.0	2	9	9	7.2	12.3	79.0
08/27/2013 10:07	67.0	1	13	13	7.2	12.3	78.0
08/27/2013 10:08	83.0	1	16	16	8.1	11.4	78.0
08/27/2013 10:09	84.0	1	17	17	8.4	11.1	78.0
08/27/2013 10:10	85.0	1	17	17	8.5	11.1	78.0
Raw Average =	77	1	9.2	9.2	8.0	11.3	82.0
O2 Corrected Avg. =	112	2	13	13			
Lbs./Hour Avg. =	29.13	0.74	2.13				
Period % Recovery =	95.7	95.7	95.7	95.7	100.0	95.7	100.0

Date/Time Printed: 08/27/2013 10:34

R#3

Economizer Rata Report

COVANTA ENERGY

Company: Covanta Huntington, Inc.
Report Name: UNIT #1 ECON RATA

Start of Report: 08/27/2013 10:27
End of Report: 08/27/2013 10:50 **Validation:** Valid Data Only

	SO2e	CO2e	O2e
Group#-Channel#	G8-C6	G8-C2	G8-C1
Long Descrip.	U-1 SO2 E	U-1 CO2 E	U-1 O2 Ec
Short Descrip.	SO2e	CO2e	O2e
Units	ppm	%	%
Range	0-500	0-20	0-25
08/27/2013 10:27	56	9.6	9.5
08/27/2013 10:28	47	9.4	9.7
08/27/2013 10:29	41	9.3	9.9
08/27/2013 10:30	40	9.4	9.7
08/27/2013 10:31	45	9.7	9.4
08/27/2013 10:32	49	9.5	9.6
08/27/2013 10:33	45	9.3	9.8
08/27/2013 10:34	45	9.3	9.8
08/27/2013 10:35	43	9.2	9.9
08/27/2013 10:36	42	9.1	10.1
08/27/2013 10:37	43	9.6	9.5
08/27/2013 10:38	45	9.6	9.5
08/27/2013 10:39	43	9.2	9.8
08/27/2013 10:40	45	9.6	9.4
08/27/2013 10:41	47	9.9	9.2
08/27/2013 10:42	50	9.6	9.4
08/27/2013 10:43	59	9.5	9.5
08/27/2013 10:44	59	9.3	9.8
08/27/2013 10:45	60	9.4	9.6
08/27/2013 10:46	59	9.5	9.6
08/27/2013 10:47	55	9.5	9.6
08/27/2013 10:48	53	9.2	9.8
08/27/2013 10:49	51	9.1	10.1
08/27/2013 10:50	50	9.0	10.2
Raw Average =	48	9.4	9.6
O2 Corrected Avg. =	60		
Period % Recovery =	100.0	100.0	100.0

Date/Time Printed: 08/27/2013 10:54

R #3

Stack Rata Report

COVANTA ENERGY

Company: Covanta Huntington, Inc.
Report Name: UNIT #1 STACK RATA

Start of Report: 08/27/2013 10:27
End of Report: 08/27/2013 10:50 **Validation:** Valid Data Only

	NOxs	SO2S	COlow	COhigh	CO2	O2	Steam Flow
Group#-Channel#	G8-C10	G8-C9	G8-C3	G8-C5	G8-C8	G8-C7	G8-C19
Long Descrip.	U-1 NOx S	U-1 SO2 S	U-1 CO St	U-1 CO Se	U-1 CO2 S	U-1 O2 St	U-1 Steam
Short Descrip.	NOxs	SO2s	COs LoRng	COs	CO2s	O2s	Steam
Units	ppm	ppm	ppm	ppm	%	%	K#/Hr
Range	0-500	0-200	0-200	0-2000	0-20	0-25	0-100
08/27/2013 10:27	73.0	0	12	12	8.9	10.6	82.0
08/27/2013 10:28	88.0	0	15	15	8.8	10.8	82.0
08/27/2013 10:29	93.0	0	13	13	8.6	11.0	81.0
08/27/2013 10:30	83.0	0	15	15	8.7	10.8	80.0
08/27/2013 10:31	76.0	0	19	19	9.0	10.5	80.0
08/27/2013 10:32	84.0	0	15	15	9.0	10.6	80.0
08/27/2013 10:33	95.0	0	13	13	8.7	10.9	80.0
08/27/2013 10:34	94.0	0	14	14	8.7	10.8	80.0
08/27/2013 10:35	80.0	0	14	14	8.6	10.9	80.0
08/27/2013 10:36	63.0	0	17	17	8.5	11.1	80.0
08/27/2013 10:37	70.0	0	18	18	8.9	10.6	80.0
08/27/2013 10:38	91.0	0	15	15	9.0	10.5	80.0
08/27/2013 10:39	87.0	0	15	15	8.6	10.9	80.0
08/27/2013 10:40	85.0	0	13	13	8.9	10.5	81.0
08/27/2013 10:41	116.0	0	12	12	9.2	10.3	81.0
08/27/2013 10:42	104.0	0	10	10	9.0	10.5	82.0
08/27/2013 10:43	86.0	0	9	9	8.9	10.6	82.0
08/27/2013 10:44	73.0	0	10	10	8.7	10.9	82.0
08/27/2013 10:45	72.0	0	11	11	8.8	10.7	82.0
08/27/2013 10:46	94.0	0	8	8	8.9	10.6	82.0
08/27/2013 10:47	76.0	0	7	7	7.5	12.2	82.0
08/27/2013 10:48	63.0	0	8	8	8.5	10.9	82.0
08/27/2013 10:49	67.0	0	10	10	8.5	11.1	82.0
08/27/2013 10:50	81.0	0	12	12	8.4	11.2	81.0
Raw Average =	83	0	12.7	12.7	8.7	10.8	81.0
O2 Corrected Avg. =	114	0	17	17			
Lbs./Hour Avg. =	28.48	0.00	2.65				
Period % Recovery =	100.0	100.0	100.0	100.0	100.0	100.0	100.0

Date/Time Printed: 08/27/2013 10:53

R#4

Economizer Rata Report

COVANTA ENERGY

Company: Covanta Huntington, Inc.
Report Name: UNIT #1 ECON RATA

Start of Report: 08/27/2013 11:05
End of Report: 08/27/2013 11:28 **Validation:** Valid Data Only

	SO2e	CO2e	O2e
Group#-Channel#	G8-C6	G8-C2	G8-C1
Long Descrip.	U-1 SO2 E	U-1 CO2 E	U-1 O2 Ec
Short Descrip.	SO2e	CO2e	O2e
Units	ppm	%	%
Range	0-500	0-20	0-25
08/27/2013 11:05	63	9.4	9.8
08/27/2013 11:06	66	8.8	10.5
08/27/2013 11:07	69	9.2	10.1
08/27/2013 11:08	72	9.3	9.9
08/27/2013 11:09	73	9.1	10.1
08/27/2013 11:10	72	8.9	10.3
08/27/2013 11:11	73	9.1	10.1
08/27/2013 11:12	76	9.0	10.1
08/27/2013 11:13	75	8.9	10.2
08/27/2013 11:14	65	8.6	10.5
08/27/2013 11:15	59	9.5	9.7
08/27/2013 11:16	58	9.7	9.3
08/27/2013 11:17	43	8.8	10.3
08/27/2013 11:18	38	7.8	11.4
08/27/2013 11:19	33	7.8	11.5
08/27/2013 11:20	33	8.6	10.6
08/27/2013 11:21	33	8.4	10.7
08/27/2013 11:22	29	8.3	11.0
08/27/2013 11:23	32	8.4	10.8
08/27/2013 11:24	27	7.0	12.2
08/27/2013 11:25	23	7.2	12.1
08/27/2013 11:26	22	8.6	10.6
08/27/2013 11:27	29	9.4	9.7
08/27/2013 11:28	31	9.4	9.6
Raw Average =	49	8.7	10.4
O2 Corrected Avg. =	66		
Period % Recovery =	100.0	100.0	100.0

Date/Time Printed: 08/27/2013 11:32

R#4

Stack Rata Report

COVANTA ENERGY

Company: Covanta Huntington, Inc.
Report Name: UNIT #1 STACK RATA

Start of Report: 08/27/2013 11:05
End of Report: 08/27/2013 11:28

Validation: Valid Data Only

	NOxs	SO2S	COlow	COhigh	CO2	O2	Steam Flow
Group#-Channel#	G8-C10	G8-C9	G8-C3	G8-C5	G8-C8	G8-C7	G8-C19
Long Descrip.	U-1 NOx S	U-1 SO2 S	U-1 CO St	U-1 CO Se	U-1 CO2 S	U-1 O2 St	U-1 Steam
Short Descrip.	NOxs	SO2s	COs LoRng	COs	CO2s	O2s	Steam
Units	ppm	ppm	ppm	ppm	%	%	K#/Hr
Range	0-500	0-200	0-200	0-2000	0-20	0-25	0-100
08/27/2013 11:05	61.0	0	10	10	8.7	10.9	82.0
08/27/2013 11:06	49.0	0	12	12	8.2	11.5	82.0
08/27/2013 11:07	56.0	0	14	14	8.4	11.2	82.0
08/27/2013 11:08	77.0	0	13	13	8.7	11.0	82.0
08/27/2013 11:09	76.0	0	10	10	8.5	11.2	81.0
08/27/2013 11:10	62.0	0	11	11	8.3	11.4	81.0
08/27/2013 11:11	75.0	0	15	15	8.5	11.2	80.0
08/27/2013 11:12	82.0	0	12	12	8.4	11.2	80.0
08/27/2013 11:13	69.0	0	11	11	8.3	11.3	80.0
08/27/2013 11:14	61.0	0	12	12	8.1	11.6	80.0
08/27/2013 11:15	77.0	0	14	14	8.7	10.8	82.0
08/27/2013 11:16	122.0	0	12	12	9.2	10.4	82.0
08/27/2013 11:17	95.0	0	8	8	8.3	11.4	82.0
08/27/2013 11:18	48.0	0	10	10	7.4	12.3	80.0
08/27/2013 11:19	41.0	0	15	15	7.2	12.4	79.0
08/27/2013 11:20	64.0	0	16	16	7.3	12.4	79.0
08/27/2013 11:21	80.0	0	14	14	6.5	13.3	78.0
08/27/2013 11:22	55.0	0	11	11	5.9	13.9	78.0
08/27/2013 11:23	46.0	0	15	15	6.0	13.9	77.0
08/27/2013 11:24	48.0	0	14	14	5.5	14.5	75.0
08/27/2013 11:25	65.0	0	21	21	6.3	13.3	74.0
08/27/2013 11:26	85.0	0	26	26	7.9	11.6	74.0
08/27/2013 11:27	101.0	0	20	20	8.7	10.8	75.0
08/27/2013 11:28	105.0	0	16	16	8.8	10.7	75.0
Raw Average =	70	0	13.8	13.8	7.8	11.8	79.1
O2 Corrected Avg. =	108	0	21	21			
Lbs./Hour Avg. =	26.45	0.00	3.14				
Period % Recovery =	100.0	100.0	100.0	100.0	100.0	100.0	100.0

Date/Time Printed: 08/27/2013 11:32

Economizer Rata Report

R#5

COVANTA ENERGY

Company: Covanta Huntington, Inc.
Report Name: UNIT #1 ECON RATA

Start of Report: 08/27/2013 11:44
End of Report: 08/27/2013 12:07

Validation: Valid Data Only

	SO2e		CO2e	O2e	
Group#-Channel#	G8-C6		G8-C2	G8-C1	
Long Descrip.	U-1 SO2 E		U-1 CO2 E	U-1 O2 Ec	
Short Descrip.	SO2e		CO2e	O2e	
Units	ppm		%	%	
Range	0-500		0-20	0-25	
08/27/2013 11:44	41		10.1	8.9	
08/27/2013 11:45	40		9.8	9.3	
08/27/2013 11:46	40		9.9	9.0	
08/27/2013 11:47	37		9.5	9.6	
08/27/2013 11:48	37		10.1	8.9	
08/27/2013 11:49	35		9.3	9.7	
08/27/2013 11:50	33		9.2	9.8	
08/27/2013 11:51	38		9.7	9.4	
08/27/2013 11:52	39		9.7	9.3	
08/27/2013 11:53	37		9.0	10.0	
08/27/2013 11:54	37		9.5	9.5	
08/27/2013 11:55	36		9.0	10.0	
08/27/2013 11:56	33		8.9	10.2	
08/27/2013 11:57	35		9.3	9.7	
08/27/2013 11:58	34		9.6	9.5	
08/27/2013 11:59	34		9.4	9.7	
08/27/2013 12:00					
08/27/2013 12:01	----		6.9		
08/27/2013 12:02	40	<	8.9	9.9	<
08/27/2013 12:03	46		9.1	9.9	
08/27/2013 12:04	48		9.5	9.4	
08/27/2013 12:05	53		9.7	9.2	
08/27/2013 12:06	57		9.6	9.3	
08/27/2013 12:07	60		9.4	9.5	
08/27/2013 12:07					
Raw Average =	40		9.3	9.5	
O2 Corrected Avg. =	49				
Period % Recovery =	95.7		100.0	95.7	

Date/Time Printed: 08/27/2013 12:22

Stack Rata Report

R#5

COVANTA ENERGY

Company: Covanta Huntington, Inc.
Report Name: UNIT #1 STACK RATA

Start of Report: 08/27/2013 11:44
End of Report: 08/27/2013 12:07 **Validation:** Valid Data Only

	NOxs	SO2S	COlow	COhigh	CO2	O2	Steam Flow
Group#-Channel#	G8-C10	G8-C9	G8-C3	G8-C5	G8-C8	G8-C7	G8-C19
Long Descrip.	U-1 NOx S	U-1 SO2 S	U-1 CO St	U-1 CO Se	U-1 CO2 S	U-1 O2 St	U-1 Steam
Short Descrip.	NOxs	SO2s	COs LoRng	COs	CO2s	O2s	Steam
Units	ppm	ppm	ppm	ppm	%	%	K#/Hr
Range	0-500	0-200	0-200	0-2000	0-20	0-25	0-100
08/27/2013 11:44	120.0	0	9	9	9.4	10.1	84.0
08/27/2013 11:45	101.0	0	8	8	9.1	10.4	84.0
08/27/2013 11:46	93.0	0	8	8	9.2	10.2	84.0
08/27/2013 11:47	82.0	0	7	7	8.8	10.7	84.0
08/27/2013 11:48	100.0	0	8	8	9.3	10.1	85.0
08/27/2013 11:49	88.0	0	6	6	8.8	10.8	84.0
08/27/2013 11:50	49.0	0	8	8	8.6	10.9	84.0
08/27/2013 11:51	74.0	0	11	11	9.0	10.5	84.0
08/27/2013 11:52	103.0	0	9	9	9.1	10.4	84.0
08/27/2013 11:53	63.0	0	6	6	8.5	11.0	84.0
08/27/2013 11:54	68.0	0	8	8	8.8	10.7	84.0
08/27/2013 11:55	81.0	0	7	7	8.5	11.0	84.0
08/27/2013 11:56	50.0	0	8	8	8.3	11.3	83.0
08/27/2013 11:57	73.0	0	13	13	8.6	10.8	83.0
08/27/2013 11:58	105.0	0	12	12	8.9	10.6	83.0
08/27/2013 11:59	83.0	0	11	11	7.8	12.1	83.0
08/27/2013 12:00							
08/27/2013 12:01							
08/27/2013 12:02	83.0 <	0 <	11 <	11 <	8.7	10.9 <	83.0
08/27/2013 12:03	65.0	0	14	14	8.5	11.0	83.0
08/27/2013 12:04	60.0	0	18	18	8.8	10.6	83.0
08/27/2013 12:05	90.0	0	15	15	9.0	10.4	83.0
08/27/2013 12:06	91.0	0	11	11	9.0	10.5	82.0
08/27/2013 12:07	68.0	0	11	11	8.8	10.7	82.0
Raw Average =	81	0	9.9	9.9	8.7	10.7	83.4
O2 Corrected Avg. =	111	0	13	13			
Lbs./Hour Avg. =	28.79	0.00	2.14				
Period % Recovery =	95.7	95.7	95.7	95.7	100.0	95.7	100.0

Date/Time Printed: 08/27/2013 12:22

Economizer Rata Report

✓ R#6

COVANTA ENERGY

Company: Covanta Huntington, Inc.
Report Name: UNIT #1 ECON RATA

Start of Report: 08/27/2013 12:22
End of Report: 08/27/2013 12:45 **Validation:** Valid Data Only

	SO2e	CO2e	O2e
Group#-Channel#	G8-C6	G8-C2	G8-C1
Long Descrip.	U-1 SO2 E	U-1 CO2 E	U-1 O2 Ec
Short Descrip.	SO2e	CO2e	O2e
Units	ppm	%	%
Range	0-500	0-20	0-25
08/27/2013 12:22	56	9.7	9.2
08/27/2013 12:23	49	9.6	9.4
08/27/2013 12:24	43	9.7	9.3
08/27/2013 12:25	42	9.4	9.5
08/27/2013 12:26	41	9.4	9.6
08/27/2013 12:27	40	9.9	9.1
08/27/2013 12:28	39	9.9	9.0
08/27/2013 12:29	37	10.0	8.9
08/27/2013 12:30	37	9.8	9.1
08/27/2013 12:31	38	10.0	8.8
08/27/2013 12:32	38	9.9	9.0
08/27/2013 12:33	40	9.7	9.2
08/27/2013 12:34	41	9.5	9.4
08/27/2013 12:35	39	9.7	9.2
08/27/2013 12:36	40	9.8	9.0
08/27/2013 12:37	41	10.0	8.9
08/27/2013 12:38	42	9.4	9.5
08/27/2013 12:39	44	9.7	9.2
08/27/2013 12:40	49	9.6	9.2
08/27/2013 12:41	50	9.5	9.4
08/27/2013 12:42	48	9.6	9.3
08/27/2013 12:43	53	9.9	9.0
08/27/2013 12:44	51	9.8	9.1
08/27/2013 12:45	49	9.8	9.1
Raw Average =	43	9.7	9.1
O2 Corrected Avg. =	51		
Period % Recovery =	100.0	100.0	100.0

Date/Time Printed: 08/27/2013 12:58

R#6

Stack Rata Report

COVANTA ENERGY

Company: Covanta Huntington, Inc.
Report Name: UNIT #1 STACK RATA

Start of Report: 08/27/2013 12:22
End of Report: 08/27/2013 12:45

Validation: Valid Data Only

	NOxs	SO2S	COlow	COhigh	CO2	O2	Steam Flow
Group#-Channel#	G8-C10	G8-C9	G8-C3	G8-C5	G8-C8	G8-C7	G8-C19
Long Descrip.	U-1 NOx S	U-1 SO2 S	U-1 CO St	U-1 CO Se	U-1 CO2 S	U-1 O2 St	U-1 Steam
Short Descrip.	NOxs	SO2s	COs LoRng	COs	CO2s	O2s	Steam
Units	ppm	ppm	ppm	ppm	%	%	K#/Hr
Range	0-500	0-200	0-200	0-2000	0-20	0-25	0-100
08/27/2013 12:22	76.0	0	19	19	9.1	10.4	81.0
08/27/2013 12:23	84.0	0	20	20	9.0	10.5	81.0
08/27/2013 12:24	81.0	0	19	19	9.0	10.5	81.0
08/27/2013 12:25	76.0	0	19	19	8.8	10.7	80.0
08/27/2013 12:26	77.0	0	19	19	8.7	10.8	80.0
08/27/2013 12:27	79.0	0	20	20	9.1	10.3	80.0
08/27/2013 12:28	86.0	0	17	17	9.2	10.2	81.0
08/27/2013 12:29	92.0	0	16	16	9.4	10.1	81.0
08/27/2013 12:30	92.0	0	15	15	9.2	10.2	81.0
08/27/2013 12:31	100.0	0	13	13	9.4	10.0	82.0
08/27/2013 12:32	100.0	0	9	9	9.2	10.1	82.0
08/27/2013 12:33	90.0	0	10	10	9.1	10.3	82.0
08/27/2013 12:34	88.0	0	12	12	9.0	10.5	82.0
08/27/2013 12:35	80.0	0	14	14	9.0	10.3	82.0
08/27/2013 12:36	101.0	0	12	12	9.2	10.2	83.0
08/27/2013 12:37	110.0	0	9	9	9.3	10.1	83.0
08/27/2013 12:38	82.0	0	9	9	8.9	10.6	83.0
08/27/2013 12:39	84.0	0	9	9	9.0	10.4	84.0
08/27/2013 12:40	84.0	0	8	8	9.0	10.4	83.0
08/27/2013 12:41	78.0	0	9	9	8.9	10.5	83.0
08/27/2013 12:42	92.0	0	11	11	9.0	10.4	83.0
08/27/2013 12:43	98.0	0	11	11	9.3	10.1	84.0
08/27/2013 12:44	102.0	0	11	11	9.2	10.3	84.0
08/27/2013 12:45	95.0	0	9	9	9.2	10.3	84.0
Raw Average =	88	0	13.3	13.3	9.0	10.3	82.0
O2 Corrected Avg. =	116	0	17	17			
Lbs./Hour Avg. =	29.53	0.00	2.70				
Period % Recovery =	100.0	100.0	100.0	100.0	100.0	100.0	100.0

Date/Time Printed: 08/27/2013 12:58

Economizer Rata Report

R+7

COVANTA ENERGY

Company: Covanta Huntington, Inc.
Report Name: UNIT #1 ECON RATA

Start of Report: 08/27/2013 13:03
End of Report: 08/27/2013 13:26

Validation: Valid Data Only

	SO2e	CO2e	O2e
Group#-Channel#	G8-C6	G8-C2	G8-C1
Long Descrip.	U-1 SO2 E	U-1 CO2 E	U-1 O2 Ec
Short Descrip.	SO2e	CO2e	O2e
Units	ppm	%	%
Range	0-500	0-20	0-25
08/27/2013 13:03	48	9.2	9.8
08/27/2013 13:04	57	9.7	9.4
08/27/2013 13:05	58	9.4	9.6
08/27/2013 13:06	54	9.1	10.1
08/27/2013 13:07	54	9.7	9.3
08/27/2013 13:08	47	9.2	10.0
08/27/2013 13:09	47	9.3	9.7
08/27/2013 13:10	45	9.1	10.0
08/27/2013 13:11	43	8.9	10.2
08/27/2013 13:12	41	8.9	10.3
08/27/2013 13:13	41	9.0	10.1
08/27/2013 13:14	40	9.1	10.0
08/27/2013 13:15	41	8.7	10.4
08/27/2013 13:16	38	8.6	10.6
08/27/2013 13:17	37	8.8	10.4
08/27/2013 13:18	37	9.2	9.9
08/27/2013 13:19	34	8.7	10.4
08/27/2013 13:20	32	8.6	10.5
08/27/2013 13:21	32	8.5	10.6
08/27/2013 13:22	34	9.3	9.8
08/27/2013 13:23	35	9.6	9.4
08/27/2013 13:24	40	9.7	9.2
08/27/2013 13:25	41	8.9	10.0
08/27/2013 13:26	37	8.5	10.6
Raw Average =	42	9.0	10.0
O2 Corrected Avg. =	53		
Period % Recovery =	100.0	100.0	100.0

Date/Time Printed: 08/27/2013 13:29

R #7

Stack Rata Report

COVANTA ENERGY

Company: Covanta Huntington, Inc.
Report Name: UNIT #1 STACK RATA

Start of Report: 08/27/2013 13:03
End of Report: 08/27/2013 13:26 **Validation:** Valid Data Only

	NOxs	SO2S	COlow	COhigh	CO2	O2	Steam Flow
Group#-Channel#	G8-C10	G8-C9	G8-C3	G8-C5	G8-C8	G8-C7	G8-C19
Long Descrip.	U-1 NOx S	U-1 SO2 S	U-1 CO St	U-1 CO Se	U-1 CO2 S	U-1 O2 St	U-1 Steam
Short Descrip.	NOxs	SO2s	COs LoRng	COs	CO2s	O2s	Steam
Units	ppm	ppm	ppm	ppm	%	%	K#/Hr
Range	0-500	0-200	0-200	0-2000	0-20	0-25	0-100
08/27/2013 13:03	116.0	0	12	12	8.6	11.0	83.0
08/27/2013 13:04	108.0	0	13	13	9.0	10.6	84.0
08/27/2013 13:05	80.0	0	13	13	8.8	10.8	84.0
08/27/2013 13:06	56.0	0	14	14	8.5	11.1	84.0
08/27/2013 13:07	96.0	0	17	17	9.0	10.5	84.0
08/27/2013 13:08	84.0	0	11	11	8.6	11.1	84.0
08/27/2013 13:09	72.0	0	11	11	8.7	10.9	84.0
08/27/2013 13:10	68.0	0	12	12	8.6	11.1	83.0
08/27/2013 13:11	65.0	0	12	12	8.4	11.3	83.0
08/27/2013 13:12	72.0	0	15	15	8.3	11.4	82.0
08/27/2013 13:13	94.0	0	16	16	8.4	11.2	82.0
08/27/2013 13:14	105.0	0	13	13	8.5	11.1	82.0
08/27/2013 13:15	66.0	0	14	14	8.3	11.5	81.0
08/27/2013 13:16	49.0	0	21	21	8.0	11.6	80.0
08/27/2013 13:17	66.0	0	19	19	8.2	11.5	80.0
08/27/2013 13:18	90.0	0	17	17	8.6	11.1	80.0
08/27/2013 13:19	82.0	0	14	14	8.2	11.5	79.0
08/27/2013 13:20	64.0	0	13	13	8.1	11.6	79.0
08/27/2013 13:21	59.0	0	16	16	8.0	11.6	78.0
08/27/2013 13:22	84.0	0	18	18	8.6	10.9	79.0
08/27/2013 13:23	104.0	0	13	13	8.9	10.6	80.0
08/27/2013 13:24	96.0	0	10	10	9.1	10.4	80.0
08/27/2013 13:25	80.0	0	10	10	8.5	11.1	80.0
08/27/2013 13:26	69.0	0	12	12	8.0	11.6	79.0
Raw Average =	80	0	14.0	14.0	8.5	11.1	81.4
O2 Corrected Avg. =	114	0	19	19			
Lbs./Hour Avg. =	28.37	0.00	3.01				
Period % Recovery =	100.0	100.0	100.0	100.0	100.0	100.0	100.0

Date/Time Printed: 08/27/2013 13:29

Economizer Rata Report

Rob

COVANTA ENERGY

Company: Covanta Huntington, Inc.
Report Name: UNIT #1 ECON RATA

Start of Report: 08/27/2013 13:49
End of Report: 08/27/2013 14:12 **Validation:** Valid Data Only

	SO2e		CO2e	O2e	
Group#-Channel#	G8-C6		G8-C2	G8-C1	
Long Descrip.	U-1 SO2 E		U-1 CO2 E	U-1 O2 Ec	
Short Descrip.	SO2e		CO2e	O2e	
Units	ppm		%	%	
Range	0-500		0-20	0-25	
08/27/2013 13:49	49		8.8	10.0	
08/27/2013 13:50	48		8.4	10.6	
08/27/2013 13:51	43		8.5	10.6	
08/27/2013 13:52	39		8.9	10.2	
08/27/2013 13:53	42		9.7	9.2	
08/27/2013 13:54	53		9.7	9.2	
08/27/2013 13:55	51		9.8	9.1	
08/27/2013 13:56	45		9.4	9.6	
08/27/2013 13:57	41		9.5	9.5	
08/27/2013 13:58	41		9.6	9.3	
08/27/2013 13:59	38		9.2	9.8	
08/27/2013 14:00					
08/27/2013 14:01			6.9		
08/27/2013 14:02	28	<	8.7	10.1	<
08/27/2013 14:03	30		9.2	9.9	
08/27/2013 14:04	33		9.5	9.6	
08/27/2013 14:05	36		9.3	9.7	
08/27/2013 14:06	35		9.0	10.1	
08/27/2013 14:07	36		9.4	9.7	
08/27/2013 14:08	35		9.5	9.6	
08/27/2013 14:09	36		9.8	9.3	
08/27/2013 14:10	42		9.8	9.2	
08/27/2013 14:11	43		9.6	9.4	
08/27/2013 14:12	44		9.4	9.6	
Raw Average =	40		9.2	9.7	
O2 Corrected Avg. =	50				
Period % Recovery =	95.7		100.0	95.7	

Date/Time Printed: 08/27/2013 14:20

Stack Rata Report

✓ R#8

COVANTA ENERGY

Company: Covanta Huntington, Inc.
Report Name: UNIT #1 STACK RATA

Start of Report: 08/27/2013 13:49
End of Report: 08/27/2013 14:12 **Validation:** Valid Data Only

	NOxs	SO2S	COlow	COhigh	CO2	O2	Steam Flow
Group#-Channel#	G8-C10	G8-C9	G8-C3	G8-C5	G8-C8	G8-C7	G8-C19
Long Descrip.	U-1 NOx S	U-1 SO2 S	U-1 CO St	U-1 CO Se	U-1 CO2 S	U-1 O2 St	U-1 Steam
Short Descrip.	NOxs	SO2s	COs LoRng	COs	CO2s	O2s	Steam
Units	ppm	ppm	ppm	ppm	%	%	K#/Hr
Range	0-500	0-200	0-200	0-2000	0-20	0-25	0-100
08/27/2013 13:49	74.0	0	15	15	8.4	11.1	84.0
08/27/2013 13:50	54.0	0	19	19	8.0	11.6	83.0
08/27/2013 13:51	69.0	0	24	24	8.0	11.6	82.0
08/27/2013 13:52	97.0	0	26	26	8.4	11.2	82.0
08/27/2013 13:53	115.0	0	22	22	9.1	10.4	82.0
08/27/2013 13:54	101.0	0	18	18	9.1	10.3	83.0
08/27/2013 13:55	98.0	0	21	21	9.2	10.2	83.0
08/27/2013 13:56	90.0	0	17	17	8.8	10.7	84.0
08/27/2013 13:57	77.0	0	19	19	8.9	10.6	84.0
08/27/2013 13:58	69.0	0	22	22	9.1	10.5	84.0
08/27/2013 13:59	56.0	0	19	19	8.6	10.9	84.0
08/27/2013 14:00							
08/27/2013 14:01							
08/27/2013 14:02	87.0 <	0 <	23 <	23 <	8.5	11.1 <	83.0
08/27/2013 14:03	94.0	0	24	24	8.7	10.9	83.0
08/27/2013 14:04	100.0	0	26	26	8.9	10.7	83.0
08/27/2013 14:05	89.0	0	25	25	8.8	10.9	83.0
08/27/2013 14:06	71.0	0	26	26	8.5	11.2	82.0
08/27/2013 14:07	75.0	0	32	32	8.7	10.8	82.0
08/27/2013 14:08	91.0	0	25	25	8.9	10.7	82.0
08/27/2013 14:09	101.0	0	21	21	9.1	10.4	83.0
08/27/2013 14:10	106.0	0	20	20	9.2	10.3	83.0
08/27/2013 14:11	90.0	0	17	17	9.0	10.5	83.0
08/27/2013 14:12	77.0	0	17	17	8.9	10.7	83.0
Raw Average =	85	0	21.7	21.7	8.7	10.7	83.0
O2 Corrected Avg. =	117	0	29	29			
Lbs./Hour Avg. =	30.08	0.00	4.65				
Period % Recovery =	95.7	95.7	95.7	95.7	100.0	95.7	100.0

Date/Time Printed: 08/27/2013 14:21

Economizer Rata Report

✓ RH9

COVANTA ENERGY

Company: Covanta Huntington, Inc.
Report Name: UNIT #1 ECON RATA

Start of Report: 08/27/2013 14:28
End of Report: 08/27/2013 14:51 **Validation:** Valid Data Only

	SO2e	CO2e	O2e
Group#-Channel#	G8-C6	G8-C2	G8-C1
Long Descrip.	U-1 SO2 E	U-1 CO2 E	U-1 O2 Ec
Short Descrip.	SO2e	CO2e	O2e
Units	ppm	%	%
Range	0-500	0-20	0-25
08/27/2013 14:28	58	9.3	9.7
08/27/2013 14:29	64	9.5	9.5
08/27/2013 14:30	65	9.4	9.6
08/27/2013 14:31	68	9.5	9.5
08/27/2013 14:32	69	9.3	9.7
08/27/2013 14:33	67	9.3	9.7
08/27/2013 14:34	68	9.5	9.4
08/27/2013 14:35	68	9.6	9.3
08/27/2013 14:36	66	9.5	9.4
08/27/2013 14:37	60	9.5	9.3
08/27/2013 14:38	58	9.5	9.3
08/27/2013 14:39	51	9.0	9.9
08/27/2013 14:40	49	9.4	9.4
08/27/2013 14:41	49	9.2	9.6
08/27/2013 14:42	50	9.5	9.3
08/27/2013 14:43	49	9.3	9.6
08/27/2013 14:44	50	9.4	9.5
08/27/2013 14:45	51	9.5	9.3
08/27/2013 14:46	49	9.2	9.7
08/27/2013 14:47	48	9.0	9.9
08/27/2013 14:48	46	9.2	9.6
08/27/2013 14:49	43	9.2	9.6
08/27/2013 14:50	44	9.6	9.2
08/27/2013 14:51	46	9.2	9.5
Raw Average =	55	9.3	9.5
O2 Corrected Avg. =	67		
Period % Recovery =	100.0	100.0	100.0

Date/Time Printed: 08/27/2013 14:54

R#9

Stack Rata Report

COVANTA ENERGY

Company: Covanta Huntington, Inc.
Report Name: UNIT #1 STACK RATA

Start of Report: 08/27/2013 14:28
End of Report: 08/27/2013 14:51 **Validation:** Valid Data Only

	NOxs	SO2S	COlow	COhigh	CO2	O2	Steam Flow
Group#-Channel#	G8-C10	G8-C9	G8-C3	G8-C5	G8-C8	G8-C7	G8-C19
Long Descrip.	U-1 NOx S	U-1 SO2 S	U-1 CO St	U-1 CO Se	U-1 CO2 S	U-1 O2 St	U-1 Steam
Short Descrip.	NOxs	SO2s	COs LoRng	COs	CO2s	O2s	Steam
Units	ppm	ppm	ppm	ppm	%	%	K#/Hr
Range	0-500	0-200	0-200	0-2000	0-20	0-25	0-100
08/27/2013 14:28	79.0	0	18	18	8.7	10.8	80.0
08/27/2013 14:29	92.0	0	16	16	9.0	10.7	80.0
08/27/2013 14:30	91.0	0	14	14	8.9	10.8	80.0
08/27/2013 14:31	84.0	0	17	17	8.9	10.6	81.0
08/27/2013 14:32	85.0	0	17	17	8.8	10.9	81.0
08/27/2013 14:33	78.0	0	20	20	8.7	10.8	81.0
08/27/2013 14:34	82.0	0	16	16	9.0	10.5	81.0
08/27/2013 14:35	93.0	0	13	13	9.0	10.5	81.0
08/27/2013 14:36	98.0	0	11	11	9.0	10.6	82.0
08/27/2013 14:37	77.0	0	11	11	8.9	10.5	82.0
08/27/2013 14:38	81.0	0	9	9	9.0	10.5	82.0
08/27/2013 14:39	77.0	0	10	10	8.4	11.1	82.0
08/27/2013 14:40	87.0	0	11	11	8.8	10.6	82.0
08/27/2013 14:41	92.0	0	7	7	8.6	10.7	82.0
08/27/2013 14:42	89.0	0	6	6	8.9	10.5	82.0
08/27/2013 14:43	76.0	0	6	6	8.7	10.7	82.0
08/27/2013 14:44	87.0	0	7	7	8.8	10.6	82.0
08/27/2013 14:45	98.0	0	6	6	8.9	10.5	83.0
08/27/2013 14:46	86.0	0	5	5	8.7	10.8	82.0
08/27/2013 14:47	68.0	0	6	6	8.4	11.0	82.0
08/27/2013 14:48	84.0	0	7	7	8.7	10.7	82.0
08/27/2013 14:49	97.0	0	5	5	8.7	10.7	83.0
08/27/2013 14:50	92.0	0	6	6	8.9	10.4	83.0
08/27/2013 14:51	86.0	0	5	5	8.7	10.7	83.0
Raw Average =	85	0	10.3	10.3	8.8	10.6	81.7
O2 Corrected Avg. =	116	0	14	14			
Lbs./Hour Avg. =	29.42	0.00	2.16				
Period % Recovery =	100.0	100.0	100.0	100.0	100.0	100.0	100.0

Date/Time Printed: 08/27/2013 14:53

RH10

Economizer Rata Report

COVANTA ENERGY

Company: Covanta Huntington, Inc.
Report Name: UNIT #1 ECON RATA

Start of Report: 08/27/2013 15:19
End of Report: 08/27/2013 15:42 **Validation:** Valid Data Only

	SO2e	CO2e	O2e
Group#-Channel#	G8-C6	G8-C2	G8-C1
Long Descrip.	U-1 SO2 E	U-1 CO2 E	U-1 O2 Ec
Short Descrip.	SO2e	CO2e	O2e
Units	ppm	%	%
Range	0-500	0-20	0-25
08/27/2013 15:19	36	8.4	10.8
08/27/2013 15:20	40	8.6	10.5
08/27/2013 15:21	41	9.6	9.6
08/27/2013 15:22	75	12.2	6.5
08/27/2013 15:23	64	10.2	8.7
08/27/2013 15:24	50	9.1	9.9
08/27/2013 15:25	55	8.6	10.5
08/27/2013 15:26	56	8.1	10.9
08/27/2013 15:27	59	8.2	10.9
08/27/2013 15:28	62	8.2	10.8
08/27/2013 15:29	58	8.2	10.9
08/27/2013 15:30	62	8.9	10.0
08/27/2013 15:31	66	8.9	10.2
08/27/2013 15:32	67	8.9	10.1
08/27/2013 15:33	68	8.7	10.3
08/27/2013 15:34	71	9.4	9.5
08/27/2013 15:35	80	9.7	9.1
08/27/2013 15:36	77	9.3	9.5
08/27/2013 15:37	76	9.4	9.4
08/27/2013 15:38	74	9.2	9.6
08/27/2013 15:39	69	9.2	9.7
08/27/2013 15:40	74	9.4	9.4
08/27/2013 15:41	69	8.9	10.0
08/27/2013 15:42	71	9.3	9.6
Raw Average =	63	9.1	9.8
O2 Corrected Avg. =	79		
Period % Recovery =	100.0	100.0	100.0

Date/Time Printed: 08/27/2013 15:45

Stack Rata Report

✓ R #10

COVANTA ENERGY

Company: Covanta Huntington, Inc.
Report Name: UNIT #1 STACK RATA

Start of Report: 08/27/2013 15:19
End of Report: 08/27/2013 15:42

Validation: Valid Data Only

	NOxs	SO2S	COlow	COhigh	CO2	O2	Steam Flow
Group#-Channel#	G8-C10	G8-C9	G8-C3	G8-C5	G8-C8	G8-C7	G8-C19
Long Descrip.	U-1 NOx S	U-1 SO2 S	U-1 CO St	U-1 CO Se	U-1 CO2 S	U-1 O2 St	U-1 Steam
Short Descrip.	NOxs	SO2s	COs LoRng	COs	CO2s	O2s	Steam
Units	ppm	ppm	ppm	ppm	%	%	K#/Hr
Range	0-500	0-200	0-200	0-2000	0-20	0-25	0-100
08/27/2013 15:19	62.0	0	13	13	8.0	11.8	79.0
08/27/2013 15:20	62.0	0	17	17	8.2	11.6	79.0
08/27/2013 15:21	70.0	0	19	19	8.8	10.6	80.0
08/27/2013 15:22	126.0	0	20	20	11.2	8.0	83.0
08/27/2013 15:23	144.0	0	7	7	9.8	9.9	83.0
08/27/2013 15:24	89.0	0	7	7	8.5	11.1	82.0
08/27/2013 15:25	47.0	0	11	11	8.1	11.6	81.0
08/27/2013 15:26	50.0	0	15	15	7.8	11.9	80.0
08/27/2013 15:27	64.0	0	16	16	7.8	11.9	79.0
08/27/2013 15:28	72.0	0	19	19	8.0	11.8	77.0
08/27/2013 15:29	63.0	0	24	24	7.8	11.9	76.0
08/27/2013 15:30	81.0	0	25	25	8.5	11.1	76.0
08/27/2013 15:31	95.0	0	24	24	8.4	11.2	76.0
08/27/2013 15:32	97.0	0	21	21	8.4	11.2	76.0
08/27/2013 15:33	74.0	0	21	21	8.3	11.4	76.0
08/27/2013 15:34	85.0	0	19	19	8.8	10.6	77.0
08/27/2013 15:35	103.0	0	17	17	9.2	10.3	78.0
08/27/2013 15:36	90.0	0	18	18	8.9	10.6	79.0
08/27/2013 15:37	82.0	0	22	22	9.0	10.6	79.0
08/27/2013 15:38	95.0	0	16	16	8.8	10.8	79.0
08/27/2013 15:39	89.0	0	16	16	8.7	10.8	79.0
08/27/2013 15:40	89.0	0	20	20	9.0	10.6	79.0
08/27/2013 15:41	95.0	0	19	19	8.5	11.1	79.0
08/27/2013 15:42	88.0	0	18	18	8.8	10.7	79.0
Raw Average =	83	0	17.6	17.6	8.6	10.9	78.7
O2 Corrected Avg. =	117	0	24	24			
Lbs./Hour Avg. =	28.23	0.00	3.62				
Period % Recovery =	100.0	100.0	100.0	100.0	100.0	100.0	100.0

Date/Time Printed: 08/27/2013 15:44

Economizer Rata Report

✓

COVANTA ENERGY

Company: Covanta Huntington, Inc.
Report Name: UNIT #1 ECON RATA

Start of Report: 08/27/2013 15:58
End of Report: 08/27/2013 16:21

Validation: Valid Data Only

	SO2e		CO2e	O2e	
Group#-Channel#	G8-C6		G8-C2	G8-C1	
Long Descrip.	U-1 SO2 E		U-1 CO2 E	U-1 O2 Ec	
Short Descrip.	SO2e		CO2e	O2e	
Units	ppm		%	%	
Range	0-500		0-20	0-25	
08/27/2013 15:58	43		9.4	9.5	
08/27/2013 15:59	45		9.9	8.9	
08/27/2013 16:00					
08/27/2013 16:01			7.2		
08/27/2013 16:02	36	<	9.1	9.4	<
08/27/2013 16:03	40		9.6	9.2	
08/27/2013 16:04	39		9.5	9.4	
08/27/2013 16:05	38		9.6	9.2	
08/27/2013 16:06	37		9.4	9.4	
08/27/2013 16:07	37		9.1	9.7	
08/27/2013 16:08	35		8.5	10.4	
08/27/2013 16:09	35		8.1	10.9	
08/27/2013 16:10	34		7.8	11.2	
08/27/2013 16:11	32		7.5	11.4	
08/27/2013 16:12	31		7.2	11.8	
08/27/2013 16:13	32		8.3	10.7	
08/27/2013 16:14	36		9.4	9.4	
08/27/2013 16:15	39		9.7	9.0	
08/27/2013 16:16	40		9.6	9.2	
08/27/2013 16:17	41		9.6	9.2	
08/27/2013 16:18	43		9.5	9.2	
08/27/2013 16:19	40		9.5	9.3	
08/27/2013 16:20	37		9.3	9.5	
08/27/2013 16:21	36		9.2	9.6	
Raw Average =	37		8.9	9.8	
O2 Corrected Avg. =	46				
Period % Recovery =	95.7		100.0	95.7	

Date/Time Printed: 08/27/2013 16:23

Stack Rata Report

✓

COVANTA ENERGY

Company: Covanta Huntington, Inc.
Report Name: UNIT #1 STACK RATA

Start of Report: 08/27/2013 15:58
End of Report: 08/27/2013 16:21

Validation: Valid Data Only

	NOxs	SO2S	COlow	COhigh	CO2	O2	Steam Flow
Group#-Channel#	G8-C10	G8-C9	G8-C3	G8-C5	G8-C8	G8-C7	G8-C19
Long Descrip.	U-1 NOx S	U-1 SO2 S	U-1 CO St	U-1 CO Se	U-1 CO2 S	U-1 O2 St	U-1 Steam
Short Descrip.	NOxs	SO2s	COs LoRng	COs	CO2s	O2s	Steam
Units	ppm	ppm	ppm	ppm	%	%	K#/Hr
Range	0-500	0-200	0-200	0-2000	0-20	0-25	0-100
08/27/2013 15:58	79.0	0	23	23	8.9	10.6	79.0
08/27/2013 15:59	96.0	0	18	18	9.3	10.1	80.0
08/27/2013 16:00							
08/27/2013 16:01							
08/27/2013 16:02	85.0 <	0 <	17 <	17 <	9.0	10.5 <	80.0
08/27/2013 16:03	91.0	0	15	15	9.2	10.3	80.0
08/27/2013 16:04	83.0	0	14	14	9.0	10.5	81.0
08/27/2013 16:05	91.0	0	11	11	9.1	10.3	81.0
08/27/2013 16:06	96.0	0	10	10	8.9	10.5	81.0
08/27/2013 16:07	88.0	0	10	10	8.8	10.8	81.0
08/27/2013 16:08	58.0	0	12	12	8.2	11.4	80.0
08/27/2013 16:09	48.0	0	15	15	7.8	11.9	79.0
08/27/2013 16:10	50.0	0	17	17	7.4	12.2	78.0
08/27/2013 16:11	54.0	0	19	19	7.2	12.4	76.0
08/27/2013 16:12	56.0	0	22	22	6.9	12.7	75.0
08/27/2013 16:13	78.0	0	32	32	7.8	11.6	75.0
08/27/2013 16:14	109.0	0	29	29	8.9	10.6	76.0
08/27/2013 16:15	118.0	0	19	19	9.2	10.2	78.0
08/27/2013 16:16	99.0	0	13	13	9.1	10.4	79.0
08/27/2013 16:17	82.0	0	14	14	9.1	10.4	80.0
08/27/2013 16:18	85.0	0	13	13	9.1	10.4	81.0
08/27/2013 16:19	104.0	0	13	13	9.0	10.5	82.0
08/27/2013 16:20	107.0	0	14	14	8.9	10.6	82.0
08/27/2013 16:21	91.0	0	13	13	8.8	10.7	81.0
Raw Average =	84	0	16.5	16.5	8.6	10.8	79.3
O2 Corrected Avg. =	116	0	22	22			
Lbs./Hour Avg. =	28.62	0.00	3.42				
Period % Recovery =	95.7	95.7	95.7	95.7	100.0	95.7	100.0

Date/Time Printed: 08/27/2013 16:23

Economizer Rata Report

V

R#1

COVANTA ENERGY

Company: Covanta Huntington, Inc.
Report Name: UNIT #2 ECON RATA

Start of Report: 08/28/2013 09:48
End of Report: 08/28/2013 10:11

Validation: Valid Data Only

	SO2e	CO2e	O2e
Group#-Channel#	G25-C6	G25-C2	G25-C1
Long Descrip.	U-2 SO2 E	U-2 CO2 E	U-2 O2 Ec
Short Descrip.	SO2e	CO2e	O2e
Units	ppm	%	%
Range	0-500	0-20	0-25
08/28/2013 09:48	47	9.5	10.1
08/28/2013 09:49	55	10.4	9.0
08/28/2013 09:50	64	10.7	8.7
08/28/2013 09:51	59	10.4	9.0
08/28/2013 09:52	59	10.4	9.0
08/28/2013 09:53	57	9.8	9.7
08/28/2013 09:54	47	9.2	10.4
08/28/2013 09:55	40	9.1	10.5
08/28/2013 09:56	41	9.6	9.8
08/28/2013 09:57	44	9.9	9.5
08/28/2013 09:58	44	9.9	9.6
08/28/2013 09:59	46	10.4	9.0
08/28/2013 10:00	47	10.1	9.3
08/28/2013 10:01	47	10.4	9.0
08/28/2013 10:02	53	10.2	9.2
08/28/2013 10:03	48	9.4	10.0
08/28/2013 10:04	46	9.6	9.8
08/28/2013 10:05	46	10.4	8.9
08/28/2013 10:06	48	10.3	9.1
08/28/2013 10:07	43	9.7	9.7
08/28/2013 10:08	43	9.9	9.5
08/28/2013 10:09	48	10.7	8.6
08/28/2013 10:10	46	9.7	9.7
08/28/2013 10:11	44	9.6	9.7
Raw Average =	48	9.9	9.4
O2 Corrected Avg. =	58		
Period % Recovery =	100.0	100.0	100.0

Date/Time Printed: 08/28/2013 10:15

Stack Rata Report

R#1

COVANTA ENERGY

Company: Covanta Huntington, Inc.
Report Name: UNIT #2 STACK RATA

Start of Report: 08/28/2013 09:48
End of Report: 08/28/2013 10:11

Validation: Valid Data Only

	NOxs	SO2S	COlow	COhigh	CO2	O2	Steam Flow
Group#-Channel#	G25-C10	G25-C9	G25-C3	G25-C5	G25-C8	G25-C7	G25-C19
Long Descrip.	U-2 NOx S	U-2 SO2 S	U-2 CO St	U-2 CO Se	U-2 CO2 S	U-2 O2 St	U-2 Steam
Short Descrip.	NOxs	SO2s	COs LoRng	COs	CO2s	O2s	Steam
Units	ppm	ppm	ppm	ppm	%	%	K#/Hr
Range	0-500	0-200	0-200	0-2000	0-20	0-25	0-100
08/28/2013 09:48	92.0	0	19	19	9.2	10.2	78.8
08/28/2013 09:49	109.0	0	18	18	10.1	9.2	80.3
08/28/2013 09:50	129.0	0	12	12	10.3	9.1	81.3
08/28/2013 09:51	108.0	0	9	9	10.0	9.3	82.7
08/28/2013 09:52	90.0	0	10	10	10.0	9.3	83.2
08/28/2013 09:53	84.0	0	9	9	9.5	10.0	82.9
08/28/2013 09:54	84.0	0	9	9	8.9	10.6	82.0
08/28/2013 09:55	74.0	0	10	10	8.8	10.7	81.1
08/28/2013 09:56	84.0	0	9	9	9.3	10.1	80.9
08/28/2013 09:57	96.0	0	8	8	9.6	9.8	80.8
08/28/2013 09:58	93.0	0	7	7	9.6	9.8	81.1
08/28/2013 09:59	88.0	0	7	7	10.0	9.3	81.6
08/28/2013 10:00	85.0	0	8	8	9.8	9.5	82.0
08/28/2013 10:01	106.0	0	7	7	10.0	9.2	82.8
08/28/2013 10:02	107.0	0	6	6	9.9	9.6	82.4
08/28/2013 10:03	91.0	0	5	5	9.2	10.3	81.6
08/28/2013 10:04	76.0	0	6	6	9.3	10.1	81.2
08/28/2013 10:05	88.0	0	8	8	10.0	9.2	81.3
08/28/2013 10:06	128.0	0	5	5	9.9	9.4	81.0
08/28/2013 10:07	109.0	0	5	5	9.4	10.0	80.6
08/28/2013 10:08	81.0	0	7	7	9.6	9.7	81.0
08/28/2013 10:09	95.0	0	9	9	10.2	9.0	81.5
08/28/2013 10:10	101.0	0	10	10	9.4	10.0	81.3
08/28/2013 10:11	102.0	0	8	8	9.3	10.0	81.3
Raw Average =	95	0	8.7	8.7	9.6	9.7	81.4
O2 Corrected Avg. =	119	0	10	10			
Lbs./Hour Avg. =	29.89	0.00	1.66				
Period % Recovery =	100.0	100.0	100.0	100.0	100.0	100.0	100.0

Date/Time Printed: 08/28/2013 10:15

Economizer Rata Report

R#2

COVANTA ENERGY

Company: Covanta Huntington, Inc.
Report Name: UNIT #2 ECON RATA

Start of Report: 08/28/2013 10:26
End of Report: 08/28/2013 10:49 **Validation:** Valid Data Only

	SO2e	CO2e	O2e
Group#-Channel#	G25-C6	G25-C2	G25-C1
Long Descrip.	U-2 SO2 E	U-2 CO2 E	U-2 O2 Ec
Short Descrip.	SO2e	CO2e	O2e
Units	ppm	%	%
Range	0-500	0-20	0-25
08/28/2013 10:26	35	9.3	10.0
08/28/2013 10:27	33	9.6	9.7
08/28/2013 10:28	39	10.4	8.8
08/28/2013 10:29	35	9.9	9.4
08/28/2013 10:30	35	10.1	9.1
08/28/2013 10:31	37	10.0	9.2
08/28/2013 10:32	37	10.2	9.0
08/28/2013 10:33	38	10.2	9.0
08/28/2013 10:34	41	10.2	9.0
08/28/2013 10:35	40	9.9	9.4
08/28/2013 10:36	39	9.2	10.1
08/28/2013 10:37	41	9.6	9.6
08/28/2013 10:38	43	9.8	9.5
08/28/2013 10:39	46	10.1	9.2
08/28/2013 10:40	48	9.8	9.5
08/28/2013 10:41	50	10.1	9.1
08/28/2013 10:42	52	10.0	9.2
08/28/2013 10:43	48	9.6	9.7
08/28/2013 10:44	45	9.2	10.1
08/28/2013 10:45	50	9.6	9.8
08/28/2013 10:46	52	9.6	9.7
08/28/2013 10:47	52	9.6	9.7
08/28/2013 10:48	52	10.0	9.2
08/28/2013 10:49	52	9.6	9.7
Raw Average =	43	9.8	9.4
O2 Corrected Avg. =	52		
Period % Recovery =	100.0	100.0	100.0

Date/Time Printed: 08/28/2013 10:51

Stack Rata Report

R#2

COVANTA ENERGY

Company: Covanta Huntington, Inc.
Report Name: UNIT #2 STACK RATA

Start of Report: 08/28/2013 10:26
End of Report: 08/28/2013 10:49

Validation: Valid Data Only

	NOxs	SO2S	COlow	COhigh	CO2	O2	Steam Flow
Group#-Channel#	G25-C10	G25-C9	G25-C3	G25-C5	G25-C8	G25-C7	G25-C19
Long Descrip.	U-2 NOx S	U-2 SO2 S	U-2 CO St	U-2 CO Se	U-2 CO2 S	U-2 O2 St	U-2 Steam
Short Descrip.	NOxs	SO2s	COs LoRng	COs	CO2s	O2s	Steam
Units	ppm	ppm	ppm	ppm	%	%	K#/Hr
Range	0-500	0-200	0-200	0-2000	0-20	0-25	0-100
08/28/2013 10:26	66.0	0	7	7	9.0	10.3	81.6
08/28/2013 10:27	66.0	0	6	6	9.3	9.9	82.2
08/28/2013 10:28	87.0	0	7	7	10.0	9.2	82.6
08/28/2013 10:29	91.0	0	5	5	9.6	9.6	82.6
08/28/2013 10:30	100.0	0	4	4	9.7	9.4	83.0
08/28/2013 10:31	98.0	0	5	5	9.7	9.5	83.1
08/28/2013 10:32	102.0	0	5	5	9.8	9.3	83.6
08/28/2013 10:33	100.0	0	5	5	9.9	9.2	84.1
08/28/2013 10:34	101.0	0	5	5	9.9	9.3	84.5
08/28/2013 10:35	85.0	0	5	5	9.5	9.7	84.0
08/28/2013 10:36	58.0	0	5	5	8.9	10.4	83.5
08/28/2013 10:37	68.0	0	5	5	9.3	9.9	83.3
08/28/2013 10:38	93.0	0	5	5	9.4	9.8	83.2
08/28/2013 10:39	98.0	0	5	5	9.7	9.5	83.5
08/28/2013 10:40	93.0	0	5	5	9.4	9.8	83.7
08/28/2013 10:41	89.0	0	6	6	9.7	9.5	84.2
08/28/2013 10:42	95.0	0	6	6	9.7	9.5	84.3
08/28/2013 10:43	74.0	0	4	4	9.2	10.1	83.8
08/28/2013 10:44	60.0	0	5	5	8.9	10.4	83.5
08/28/2013 10:45	70.0	0	7	7	9.2	10.1	83.2
08/28/2013 10:46	73.0	0	8	8	9.3	10.0	83.0
08/28/2013 10:47	90.0	0	10	10	9.3	10.0	82.9
08/28/2013 10:48	113.0	0	6	6	9.6	9.6	83.0
08/28/2013 10:49	99.0	0	5	5	9.3	10.0	82.9
Raw Average =	86	0	5.6	5.6	9.4	9.7	83.3
O2 Corrected Avg. =	107	0	7	7			
Lbs./Hour Avg. =	27.99	0.00	1.11				
Period % Recovery =	100.0	100.0	100.0	100.0	100.0	100.0	100.0

Date/Time Printed: 08/28/2013 10:51

RU3

Economizer Rata Report

COVANTA ENERGY

Company: Covanta Huntington, Inc.
Report Name: UNIT #2 ECON RATA

Start of Report: 08/28/2013 11:11
End of Report: 08/28/2013 11:34

Validation: Valid Data Only

	SO2e		CO2e	O2e	
Group#-Channel#	G25-C6		G25-C2	G25-C1	
Long Descrip.	U-2 SO2 E		U-2 CO2 E	U-2 O2 Ec	
Short Descrip.	SO2e		CO2e	O2e	
Units	ppm		%	%	
Range	0-500		0-20	0-25	
08/28/2013 11:11	46		9.9	9.4	
08/28/2013 11:12	38		9.1	10.3	
08/28/2013 11:13	39		9.7	9.6	
08/28/2013 11:14	41		10.4	8.9	
08/28/2013 11:15					
08/28/2013 11:16			8.3		
08/28/2013 11:17	38	<	8.8	10.2	<
08/28/2013 11:18	43		9.4	10.0	
08/28/2013 11:19	47		9.7	9.7	
08/28/2013 11:20	48		10.2	9.1	
08/28/2013 11:21	45		9.9	9.4	
08/28/2013 11:22	39		9.5	9.8	
08/28/2013 11:23	43		10.1	9.2	
08/28/2013 11:24	47		9.9	9.4	
08/28/2013 11:25	44		10.1	9.2	
08/28/2013 11:26	45		10.4	8.9	
08/28/2013 11:27	48		10.3	8.9	
08/28/2013 11:28	47		9.8	9.4	
08/28/2013 11:29	39		9.0	10.3	
08/28/2013 11:30	36		9.0	10.3	
08/28/2013 11:31	43		9.5	9.8	
08/28/2013 11:32	44		9.9	9.4	
08/28/2013 11:33	43		9.9	9.4	
08/28/2013 11:34	39		9.7	9.6	
Raw Average =	42		9.6	9.5	
O2 Corrected Avg. =	52				
Period % Recovery =	95.7		100.0	95.7	

Date/Time Printed: 08/28/2013 11:36

RH3

Stack Rata Report

COVANTA ENERGY

Company: Covanta Huntington, Inc.
Report Name: UNIT #2 STACK RATA

Start of Report: 08/28/2013 11:11
End of Report: 08/28/2013 11:34 **Validation:** Valid Data Only

	NOxs	SO2S	COlow	COhigh	CO2	O2	Steam Flow
Group#-Channel#	G25-C10	G25-C9	G25-C3	G25-C5	G25-C8	G25-C7	G25-C19
Long Descrip.	U-2 NOx S	U-2 SO2 S	U-2 CO St	U-2 CO Se	U-2 CO2 S	U-2 O2 St	U-2 Steam
Short Descrip.	NOxs	SO2s	COs LoRng	COs	CO2s	O2s	Steam
Units	ppm	ppm	ppm	ppm	%	%	K#/Hr
Range	0-500	0-200	0-200	0-2000	0-20	0-25	0-100
08/28/2013 11:11	122.0	0	5	5	9.6	9.7	82.7
08/28/2013 11:12	85.0	0	4	4	8.8	10.5	82.1
08/28/2013 11:13	92.0	0	7	7	9.3	9.9	82.3
08/28/2013 11:14	120.0	0	7	7	10.0	9.2	82.7
08/28/2013 11:15							
08/28/2013 11:16							
08/28/2013 11:17	53.0 <	0 <	6 <	6 <	9.2	10.1 <	82.1
08/28/2013 11:18	41.0	0	7	7	9.3	10.0	81.9
08/28/2013 11:19	70.0	0	7	7	9.5	9.7	82.0
08/28/2013 11:20	104.0	0	7	7	9.9	9.3	82.4
08/28/2013 11:21	107.0	0	6	6	9.6	9.7	82.0
08/28/2013 11:22	95.0	0	4	4	9.3	10.0	82.2
08/28/2013 11:23	100.0	0	4	4	9.7	9.4	82.5
08/28/2013 11:24	102.0	0	3	3	9.6	9.6	82.7
08/28/2013 11:25	108.0	0	3	3	9.7	9.5	83.2
08/28/2013 11:26	111.0	0	3	3	10.0	9.1	84.1
08/28/2013 11:27	110.0	0	3	3	9.9	9.2	84.7
08/28/2013 11:28	103.0	0	3	3	9.5	9.7	84.3
08/28/2013 11:29	67.0	0	2	2	8.7	10.6	83.3
08/28/2013 11:30	63.0	0	3	3	8.7	10.5	83.0
08/28/2013 11:31	85.0	0	4	4	9.1	10.1	82.9
08/28/2013 11:32	115.0	0	6	6	9.5	9.7	83.0
08/28/2013 11:33	116.0	0	6	6	9.6	9.7	83.0
08/28/2013 11:34	85.0	0	5	5	9.4	9.8	83.1
Raw Average =	93	0	4.7	4.7	9.4	9.7	82.8
O2 Corrected Avg. =	116	0	5	5			
Lbs./Hour Avg. =	30.28	0.00	0.94				
Period % Recovery =	95.7	95.7	95.7	95.7	100.0	95.7	100.0

Date/Time Printed: 08/28/2013 11:36

R4/d

Economizer Rata Report

COVANTA ENERGY

Company: Covanta Huntington, Inc.
Report Name: UNIT #2 ECON RATA

Start of Report: 08/28/2013 11:51
End of Report: 08/28/2013 12:14

Validation: Valid Data Only

	SO2e	CO2e	O2e
Group#-Channel#	G25-C6	G25-C2	G25-C1
Long Descrip.	U-2 SO2 E	U-2 CO2 E	U-2 O2 Ec
Short Descrip.	SO2e	CO2e	O2e
Units	ppm	%	%
Range	0-500	0-20	0-25
08/28/2013 11:51	35	9.5	9.8
08/28/2013 11:52	38	9.8	9.5
08/28/2013 11:53	39	9.8	9.4
08/28/2013 11:54	40	9.5	9.7
08/28/2013 11:55	40	9.4	9.8
08/28/2013 11:56	50	9.9	9.3
08/28/2013 11:57	50	9.9	9.3
08/28/2013 11:58	50	10.0	9.1
08/28/2013 11:59	47	9.3	9.9
08/28/2013 12:00	44	8.9	10.4
08/28/2013 12:01	47	9.6	9.7
08/28/2013 12:02	48	9.6	9.7
08/28/2013 12:03	48	10.0	9.2
08/28/2013 12:04	46	9.7	9.7
08/28/2013 12:05	39	9.7	9.6
08/28/2013 12:06	37	9.6	9.8
08/28/2013 12:07	34	9.8	9.5
08/28/2013 12:08	37	10.4	8.8
08/28/2013 12:09	40	10.4	8.9
08/28/2013 12:10	40	10.4	8.8
08/28/2013 12:11	39	10.9	8.2
08/28/2013 12:12	36	10.3	8.9
08/28/2013 12:13	35	9.4	9.9
08/28/2013 12:14	32	8.9	10.4
Raw Average =	41	9.7	9.4
O2 Corrected Avg. =	50		
Period % Recovery =	100.0	100.0	100.0

Date/Time Printed: 08/28/2013 12:35

Stack Rata Report

RHK

COVANTA ENERGY

Company: Covanta Huntington, Inc.
Report Name: UNIT #2 STACK RATA

Start of Report: 08/28/2013 11:51
End of Report: 08/28/2013 12:14

Validation: Valid Data Only

	NOxs	SO2S	COlow	COhigh	CO2	O2	Steam Flow
Group#-Channel#	G25-C10	G25-C9	G25-C3	G25-C5	G25-C8	G25-C7	G25-C19
Long Descrip.	U-2 NOx S	U-2 SO2 S	U-2 CO St	U-2 CO Se	U-2 CO2 S	U-2 O2 St	U-2 Steam
Short Descrip.	NOxs	SO2s	COs LoRng	COs	CO2s	O2s	Steam
Units	ppm	ppm	ppm	ppm	%	%	K#/Hr
Range	0-500	0-200	0-200	0-2000	0-20	0-25	0-100
08/28/2013 11:51	87.0	0	5	5	9.2	10.0	81.9
08/28/2013 11:52	90.0	0	5	5	9.4	9.8	82.1
08/28/2013 11:53	80.0	0	6	6	9.5	9.7	82.0
08/28/2013 11:54	79.0	0	5	5	9.2	10.0	81.6
08/28/2013 11:55	75.0	0	5	5	9.2	10.0	81.8
08/28/2013 11:56	94.0	0	6	6	9.5	9.6	81.9
08/28/2013 11:57	102.0	0	6	6	9.6	9.5	82.2
08/28/2013 11:58	94.0	0	5	5	9.7	9.5	82.3
08/28/2013 11:59	77.0	0	5	5	8.9	10.4	81.3
08/28/2013 12:00	62.0	0	7	7	8.7	10.6	80.9
08/28/2013 12:01	70.0	0	8	8	9.2	10.1	80.6
08/28/2013 12:02	92.0	0	8	8	9.3	10.0	80.8
08/28/2013 12:03	103.0	0	7	7	9.6	9.6	81.0
08/28/2013 12:04	86.0	0	7	7	9.3	10.0	81.0
08/28/2013 12:05	84.0	0	7	7	9.3	9.9	81.1
08/28/2013 12:06	85.0	0	7	7	9.3	10.1	80.9
08/28/2013 12:07	86.0	0	8	8	9.4	9.8	81.1
08/28/2013 12:08	112.0	0	9	9	10.0	9.2	81.8
08/28/2013 12:09	134.0	0	6	6	10.0	9.2	82.6
08/28/2013 12:10	109.0	0	6	6	10.0	9.1	83.6
08/28/2013 12:11	110.0	0	7	7	10.5	8.6	84.6
08/28/2013 12:12	109.0	0	3	3	9.9	9.2	84.6
08/28/2013 12:13	71.0	0	4	4	9.1	10.2	83.3
08/28/2013 12:14	53.0	0	6	6	8.6	10.7	82.4
Raw Average =	89	0	6.1	6.1	9.4	9.7	81.9
O2 Corrected Avg. =	111	0	7	7			
Lbs./Hour Avg. =	28.65	0.00	1.20				
Period % Recovery =	100.0	100.0	100.0	100.0	100.0	100.0	100.0

Date/Time Printed: 08/28/2013 12:35

R 115

Economizer Rata Report

COVANTA ENERGY

Company: Covanta Huntington, Inc. ✓
Report Name: UNIT #2 ECON RATA

Start of Report: 08/28/2013 12:34
End of Report: 08/28/2013 12:57 **Validation:** Valid Data Only

	SO2e	CO2e	O2e
Group#-Channel#	G25-C6	G25-C2	G25-C1
Long Descrip.	U-2 SO2 E	U-2 CO2 E	U-2 O2 Ec
Short Descrip.	SO2e	CO2e	O2e
Units	ppm	%	%
Range	0-500	0-20	0-25
08/28/2013 12:34	45	9.7	9.6
08/28/2013 12:35	46	9.9	9.4
08/28/2013 12:36	48	9.9	9.4
08/28/2013 12:37	48	9.8	9.5
08/28/2013 12:38	48	10.0	9.3
08/28/2013 12:39	48	10.0	9.3
08/28/2013 12:40	49	10.1	9.2
08/28/2013 12:41	52	10.1	9.2
08/28/2013 12:42	48	10.0	9.4
08/28/2013 12:43	48	10.3	9.0
08/28/2013 12:44	45	9.7	9.8
08/28/2013 12:45	41	9.5	9.9
08/28/2013 12:46	43	9.5	9.9
08/28/2013 12:47	39	9.3	10.1
08/28/2013 12:48	38	9.6	9.9
08/28/2013 12:49	41	9.6	9.8
08/28/2013 12:50	38	9.5	10.0
08/28/2013 12:51	39	9.6	9.9
08/28/2013 12:52	38	9.0	10.5
08/28/2013 12:53	36	9.1	10.4
08/28/2013 12:54	32	9.0	10.4
08/28/2013 12:55	34	9.5	9.9
08/28/2013 12:56	34	9.3	10.2
08/28/2013 12:57	28	8.7	10.8
Raw Average =	41	9.6	9.7
O2 Corrected Avg. =	52		
Period % Recovery =	100.0	100.0	100.0

Date/Time Printed: 08/28/2013 12:59

Stack Rata Report

R#5

COVANTA ENERGY

Company: Covanta Huntington, Inc. ✓
Report Name: UNIT #2 STACK RATA

Start of Report: 08/28/2013 12:34
End of Report: 08/28/2013 12:57

Validation: Valid Data Only

	NOxs	SO2S	COlow	COhigh	CO2	O2	Steam Flow
Group#-Channel#	G25-C10	G25-C9	G25-C3	G25-C5	G25-C8	G25-C7	G25-C19
Long Descrip.	U-2 NOx S	U-2 SO2 S	U-2 CO St	U-2 CO Se	U-2 CO2 S	U-2 O2 St	U-2 Steam
Short Descrip.	NOxs	SO2s	COs LoRng	COs	CO2s	O2s	Steam
Units	ppm	ppm	ppm	ppm	%	%	K#/Hr
Range	0-500	0-200	0-200	0-2000	0-20	0-25	0-100
08/28/2013 12:34	96.0	0	3	3	9.4	9.9	81.4
08/28/2013 12:35	78.0	0	3	3	9.5	9.7	81.2
08/28/2013 12:36	74.0	0	4	4	9.5	9.7	81.0
08/28/2013 12:37	87.0	0	5	5	9.5	9.8	80.8
08/28/2013 12:38	80.0	0	7	7	9.6	9.6	80.8
08/28/2013 12:39	81.0	0	6	6	9.7	9.6	80.7
08/28/2013 12:40	98.0	0	5	5	9.7	9.5	80.8
08/28/2013 12:41	100.0	0	5	5	9.7	9.6	80.8
08/28/2013 12:42	100.0	0	4	4	9.6	9.7	81.1
08/28/2013 12:43	114.0	0	5	5	9.9	9.3	81.2
08/28/2013 12:44	91.0	0	6	6	9.4	10.1	80.5
08/28/2013 12:45	73.0	0	6	6	9.2	10.2	80.1
08/28/2013 12:46	82.0	0	8	8	9.2	10.2	79.7
08/28/2013 12:47	82.0	0	8	8	9.0	10.4	79.1
08/28/2013 12:48	88.0	0	8	8	9.1	10.2	79.1
08/28/2013 12:49	98.0	0	9	9	9.2	10.2	78.6
08/28/2013 12:50	91.0	0	8	8	9.1	10.3	78.4
08/28/2013 12:51	75.0	0	8	8	9.2	10.3	77.9
08/28/2013 12:52	67.0	0	7	7	8.6	10.8	77.4
08/28/2013 12:53	83.0	0	10	10	8.7	10.7	77.1
08/28/2013 12:54	103.0	0	13	13	8.7	10.7	77.2
08/28/2013 12:55	101.0	0	11	11	9.1	10.3	77.8
08/28/2013 12:56	91.0	0	10	10	8.9	10.6	77.6
08/28/2013 12:57	73.0	0	12	12	8.4	11.0	77.6
Raw Average =	87	0	7.1	7.1	9.2	10.1	79.5
O2 Corrected Avg. =	112	0	9	9			
Lbs./Hour Avg. =	27.85	0.00	1.37				
Period % Recovery =	100.0	100.0	100.0	100.0	100.0	100.0	100.0

Date/Time Printed: 08/28/2013 12:59

Economizer Rata Report

R #6

COVANTA ENERGY

Company: Covanta Huntington, Inc.
Report Name: UNIT #2 ECON RATA

Start of Report: 08/28/2013 13:13
End of Report: 08/28/2013 13:36 **Validation:** Valid Data Only

	SO2e		CO2e	O2e	
Group#-Channel#	G25-C6		G25-C2	G25-C1	
Long Descrip.	U-2 SO2 E		U-2 CO2 E	U-2 O2 Ec	
Short Descrip.	SO2e		CO2e	O2e	
Units	ppm		%	%	
Range	0-500		0-20	0-25	
08/28/2013 13:13	50		10.0	9.3	
08/28/2013 13:14	56		9.6	9.7	
08/28/2013 13:15					
08/28/2013 13:16			7.9		
08/28/2013 13:17	71	<	9.7	9.2	<
08/28/2013 13:18	82		10.1	9.1	
08/28/2013 13:19	78		9.2	10.1	
08/28/2013 13:20	69		8.3	11.1	
08/28/2013 13:21	70		8.7	10.7	
08/28/2013 13:22	83		9.6	9.6	
08/28/2013 13:23	93		10.1	9.1	
08/28/2013 13:24	90		10.2	9.1	
08/28/2013 13:25	88		9.9	9.4	
08/28/2013 13:26	85		9.7	9.6	
08/28/2013 13:27	79		9.2	10.2	
08/28/2013 13:28	83		9.1	10.3	
08/28/2013 13:29	91		9.7	9.7	
08/28/2013 13:30	97		10.0	9.3	
08/28/2013 13:31	91		9.9	9.3	
08/28/2013 13:32	95		10.0	9.1	
08/28/2013 13:33	94		9.6	9.7	
08/28/2013 13:34	74		8.5	10.9	
08/28/2013 13:35	66		8.1	11.3	
08/28/2013 13:36	68		9.0	10.4	
Raw Average =	79		9.4	9.8	
O2 Corrected Avg. =	100				
Period % Recovery =	95.7		100.0	95.7	

Date/Time Printed: 08/28/2013 13:48

R46

Stack Rata Report

COVANTA ENERGY

Company: Covanta Huntington, Inc.
Report Name: UNIT #2 STACK RATA

Start of Report: 08/28/2013 13:13
End of Report: 08/28/2013 13:36

Validation: Valid Data Only

	NOxs	SO2S	COlow	COhigh	CO2	O2	Steam Flow
Group#-Channel#	G25-C10	G25-C9	G25-C3	G25-C5	G25-C8	G25-C7	G25-C19
Long Descrip.	U-2 NOx S	U-2 SO2 S	U-2 CO St	U-2 CO Se	U-2 CO2 S	U-2 O2 St	U-2 Steam
Short Descrip.	NOxs	SO2s	COs LoRng	COs	CO2s	O2s	Steam
Units	ppm	ppm	ppm	ppm	%	%	K#/Hr
Range	0-500	0-200	0-200	0-2000	0-20	0-25	0-100
08/28/2013 13:13	80.0	0	8	8	9.6	9.6	78.9
08/28/2013 13:14	83.0	0	7	7	9.2	10.1	79.8
08/28/2013 13:15							
08/28/2013 13:16							
08/28/2013 13:17	94.0 <	0 <	7 <	7 <	10.1	9.0 <	85.3
08/28/2013 13:18	95.0	0	8	8	9.9	9.2	85.9
08/28/2013 13:19	80.0	0	6	6	9.0	10.3	84.8
08/28/2013 13:20	66.0	0	7	7	8.1	11.2	83.1
08/28/2013 13:21	77.0	0	9	9	8.4	10.8	82.6
08/28/2013 13:22	102.0	0	9	9	9.3	9.8	82.9
08/28/2013 13:23	93.0	0	10	10	9.8	9.3	83.6
08/28/2013 13:24	90.0	0	7	7	9.8	9.4	84.1
08/28/2013 13:25	85.0	0	6	6	9.5	9.7	84.2
08/28/2013 13:26	82.0	0	6	6	9.4	10.0	83.7
08/28/2013 13:27	61.0	0	8	8	8.9	10.5	82.8
08/28/2013 13:28	66.0	0	13	13	8.8	10.5	82.3
08/28/2013 13:29	95.0	0	16	16	9.3	10.0	82.7
08/28/2013 13:30	113.0	0	18	18	9.6	9.6	83.1
08/28/2013 13:31	87.0	0	14	14	9.6	9.6	84.1
08/28/2013 13:32	81.0	0	13	13	9.7	9.5	84.9
08/28/2013 13:33	91.0	0	12	12	9.2	10.1	84.2
08/28/2013 13:34	80.0	0	10	10	8.2	11.2	82.6
08/28/2013 13:35	66.0	0	15	15	7.8	11.5	81.4
08/28/2013 13:36	80.0	0	20	20	8.7	10.5	82.4
Raw Average =	83	0	10.4	10.4	9.1	10.0	83.0
O2 Corrected Avg. =	107	0	13	13			
Lbs./Hour Avg. =	28.11	0.00	2.12				
Period % Recovery =	95.7	95.7	95.7	95.7	100.0	95.7	100.0

Date/Time Printed: 08/28/2013 13:47

R#7

Economizer Rata Report

COVANTA ENERGY

Company: Covanta Huntington, Inc. ✓
Report Name: UNIT #2 ECON RATA

Start of Report: 08/28/2013 14:07
End of Report: 08/28/2013 14:30 **Validation:** Valid Data Only

	SO2e		CO2e	O2e	
Group#-Channel#	G25-C6		G25-C2	G25-C1	
Long Descrip.	U-2 SO2 E		U-2 CO2 E	U-2 O2 Ec	
Short Descrip.	SO2e		CO2e	O2e	
Units	ppm		%	%	
Range	0-500		0-20	0-25	
08/28/2013 14:07	25		8.8	10.6	
08/28/2013 14:08	29		9.1	10.2	
08/28/2013 14:09	27		9.3	10.0	
08/28/2013 14:10	28		10.7	8.5	
08/28/2013 14:11	38		11.1	7.9	
08/28/2013 14:12	27		8.9	10.5	
08/28/2013 14:13	20		7.9	11.4	
08/28/2013 14:14	22		8.5	10.8	
08/28/2013 14:15					
08/28/2013 14:16			7.5		
08/28/2013 14:17	77	<	10.7	7.2	<
08/28/2013 14:18	112		11.2	7.9	
08/28/2013 14:19	50		9.3	10.0	
08/28/2013 14:20	31		7.9	11.5	
08/28/2013 14:21	24		7.5	12.1	
08/28/2013 14:22	23		7.6	11.9	
08/28/2013 14:23	22		8.3	11.2	
08/28/2013 14:24	33		11.7	7.4	
08/28/2013 14:25	38		10.1	9.3	
08/28/2013 14:26	24		8.6	10.9	
08/28/2013 14:27	19		8.2	11.3	
08/28/2013 14:28	16		8.4	11.1	
08/28/2013 14:29	15		9.1	10.3	
08/28/2013 14:30	32		11.5	7.5	
Raw Average =	33		9.2	9.9	
O2 Corrected Avg. =	42				
Period % Recovery =	95.7		100.0	95.7	

Date/Time Printed: 08/28/2013 14:32

Stack Rata Report

R#7

COVANTA ENERGY

Company: Covanta Huntington, Inc.
Report Name: UNIT #2 STACK RATA

Start of Report: 08/28/2013 14:07
End of Report: 08/28/2013 14:30

Validation: Valid Data Only

	NOxs	SO2S	COlow	COhigh	CO2	O2	Steam Flow
Group#-Channel#	G25-C10	G25-C9	G25-C3	G25-C5	G25-C8	G25-C7	G25-C19
Long Descrip.	U-2 NOx S	U-2 SO2 S	U-2 CO St	U-2 CO Se	U-2 CO2 S	U-2 O2 St	U-2 Steam
Short Descrip.	NOxs	SO2s	COs LoRng	COs	CO2s	O2s	Steam
Units	ppm	ppm	ppm	ppm	%	%	K#/Hr
Range	0-500	0-200	0-200	0-2000	0-20	0-25	0-100
08/28/2013 14:07	70.0	0	8	8	8.5	10.9	82.7
08/28/2013 14:08	83.0	0	11	11	8.8	10.5	82.4
08/28/2013 14:09	81.0	0	9	9	9.0	10.3	82.4
08/28/2013 14:10	103.0	0	10	10	10.2	8.7	84.4
08/28/2013 14:11	134.0	0	7	7	10.7	8.5	84.7
08/28/2013 14:12	93.0	0	3	3	8.6	10.8	82.9
08/28/2013 14:13	51.0	0	4	4	7.7	11.7	81.3
08/28/2013 14:14	62.0	0	7	7	8.1	11.1	80.1
08/28/2013 14:15							
08/28/2013 14:16							
08/28/2013 14:17	145.0 <	0 <	21 <	21 <	10.9	7.0 <	84.0
08/28/2013 14:18	155.0	0	14	14	11.0	8.1	85.7
08/28/2013 14:19	124.0	0	6	6	9.1	10.2	84.8
08/28/2013 14:20	60.0	0	5	5	7.8	11.7	82.5
08/28/2013 14:21	45.0	0	9	9	7.1	12.3	79.9
08/28/2013 14:22	65.0	0	11	11	7.3	12.1	77.9
08/28/2013 14:23	93.0	0	12	12	8.2	11.1	79.5
08/28/2013 14:24	123.0	0	14	14	11.3	7.7	82.6
08/28/2013 14:25	96.0	0	10	10	9.8	9.8	83.0
08/28/2013 14:26	61.0	0	9	9	8.3	11.2	82.3
08/28/2013 14:27	63.0	0	9	9	7.9	11.5	81.2
08/28/2013 14:28	87.0	0	11	11	8.1	11.4	80.2
08/28/2013 14:29	99.0	0	12	12	8.4	11.2	81.6
08/28/2013 14:30	106.0	0	11	11	9.3	9.6	83.5
Raw Average =	90	0	9.6	9.6	8.8	10.3	82.0
O2 Corrected Avg. =	119	0	12	12			
Lbs./Hour Avg. =	31.03	0.00	2.01				
Period % Recovery =	95.7	95.7	95.7	95.7	100.0	95.7	100.0

Date/Time Printed: 08/28/2013 14:32

R 12 0

Economizer Rata Report

COVANTA ENERGY

Company: Covanta Huntington, Inc. ✓
Report Name: UNIT #2 ECON RATA

Start of Report: 08/28/2013 14:47
End of Report: 08/28/2013 15:10 **Validation:** Valid Data Only

	SO2e	CO2e	O2e
Group#-Channel#	G25-C6	G25-C2	G25-C1
Long Descrip.	U-2 SO2 E	U-2 CO2 E	U-2 O2 Ec
Short Descrip.	SO2e	CO2e	O2e
Units	ppm	%	%
Range	0-500	0-20	0-25
08/28/2013 14:47	26	10.2	9.2
08/28/2013 14:48	26	10.5	8.9
08/28/2013 14:49	24	10.5	8.9
08/28/2013 14:50	23	9.9	9.6
08/28/2013 14:51	22	9.9	9.6
08/28/2013 14:52	23	10.2	9.3
08/28/2013 14:53	26	10.2	9.3
08/28/2013 14:54	26	10.6	9.0
08/28/2013 14:55	32	10.9	8.6
08/28/2013 14:56	28	10.3	9.3
08/28/2013 14:57	26	9.6	10.0
08/28/2013 14:58	27	10.3	9.2
08/28/2013 14:59	31	10.3	9.2
08/28/2013 15:00	27	10.0	9.5
08/28/2013 15:01	30	10.0	9.5
08/28/2013 15:02	30	9.8	9.6
08/28/2013 15:03	30	10.1	9.3
08/28/2013 15:04	34	9.9	9.6
08/28/2013 15:05	33	10.1	9.3
08/28/2013 15:06	35	10.2	9.2
08/28/2013 15:07	33	9.3	10.2
08/28/2013 15:08	31	9.7	9.7
08/28/2013 15:09	36	10.7	8.7
08/28/2013 15:10	36	10.3	9.1
Raw Average =	28	10.1	9.3
O2 Corrected Avg. =	34		
Period % Recovery =	100.0	100.0	100.0

Date/Time Printed: 08/28/2013 15:12

Stack Rata Report

R28

COVANTA ENERGY

Company: Covanta Huntington, Inc.
Report Name: UNIT #2 STACK RATA

Start of Report: 08/28/2013 14:47
End of Report: 08/28/2013 15:10

Validation: Valid Data Only

	NOxs	SO2S	COlow	COhigh	CO2	O2	Steam Flow
Group#-Channel#	G25-C10	G25-C9	G25-C3	G25-C5	G25-C8	G25-C7	G25-C19
Long Descrip.	U-2 NOx S	U-2 SO2 S	U-2 CO St	U-2 CO Se	U-2 CO2 S	U-2 O2 St	U-2 Steam
Short Descrip.	NOxs	SO2s	COs LoRng	COs	CO2s	O2s	Steam
Units	ppm	ppm	ppm	ppm	%	%	K#/Hr
Range	0-500	0-200	0-200	0-2000	0-20	0-25	0-100
08/28/2013 14:47	110.0	0	8	8	9.9	9.4	83.7
08/28/2013 14:48	118.0	0	6	6	10.1	9.2	84.2
08/28/2013 14:49	105.0	0	6	6	10.1	9.3	84.1
08/28/2013 14:50	93.0	0	6	6	9.5	9.9	83.7
08/28/2013 14:51	90.0	0	6	6	9.5	9.9	83.3
08/28/2013 14:52	89.0	0	7	7	9.8	9.6	83.3
08/28/2013 14:53	98.0	0	8	8	9.8	9.7	83.2
08/28/2013 14:54	91.0	0	12	12	10.1	9.2	84.0
08/28/2013 14:55	112.0	0	9	9	10.4	9.0	84.3
08/28/2013 14:56	123.0	0	5	5	9.9	9.6	83.9
08/28/2013 14:57	82.0	0	5	5	9.2	10.2	83.7
08/28/2013 14:58	73.0	0	8	8	9.9	9.5	84.1
08/28/2013 14:59	83.0	0	8	8	9.9	9.6	83.9
08/28/2013 15:00	87.0	0	5	5	9.6	9.8	83.8
08/28/2013 15:01	84.0	0	6	6	9.6	9.8	83.6
08/28/2013 15:02	74.0	0	6	6	9.5	9.9	83.7
08/28/2013 15:03	77.0	0	7	7	9.7	9.7	83.8
08/28/2013 15:04	86.0	0	7	7	9.5	9.9	83.5
08/28/2013 15:05	78.0	0	7	7	9.6	9.8	83.7
08/28/2013 15:06	86.0	0	8	8	9.7	9.6	83.1
08/28/2013 15:07	75.0	0	8	8	9.0	10.5	82.1
08/28/2013 15:08	73.0	0	10	10	9.3	9.9	82.2
08/28/2013 15:09	102.0	0	10	10	10.2	9.0	82.3
08/28/2013 15:10	113.0	0	9	9	10.0	9.4	82.6
Raw Average =	91	0	7.3	7.3	9.7	9.6	83.4
O2 Corrected Avg. =	113	0	9	9			
Lbs./Hour Avg. =	29.02	0.00	1.42				
Period % Recovery =	100.0	100.0	100.0	100.0	100.0	100.0	100.0

Date/Time Printed: 08/28/2013 15:12

Economizer Rata Report

R#9

COVANTA ENERGY

Company: Covanta Huntington, Inc.
Report Name: UNIT #2 ECON RATA

Start of Report: 08/28/2013 15:28
End of Report: 08/28/2013 15:51

Validation: Valid Data Only

	SO2e	CO2e	O2e
Group#-Channel#	G25-C6	G25-C2	G25-C1
Long Descrip.	U-2 SO2 E	U-2 CO2 E	U-2 O2 Ec
Short Descrip.	SO2e	CO2e	O2e
Units	ppm	%	%
Range	0-500	0-20	0-25
08/28/2013 15:28	47	10.1	9.3
08/28/2013 15:29	49	10.1	9.4
08/28/2013 15:30	47	10.0	9.5
08/28/2013 15:31	53	10.3	9.2
08/28/2013 15:32	53	10.3	9.1
08/28/2013 15:33	52	9.9	9.5
08/28/2013 15:34	57	10.0	9.3
08/28/2013 15:35	66	9.9	9.4
08/28/2013 15:36	70	9.2	10.2
08/28/2013 15:37	71	9.3	10.2
08/28/2013 15:38	81	9.8	9.7
08/28/2013 15:39	88	10.9	8.4
08/28/2013 15:40	92	10.3	9.2
08/28/2013 15:41	69	8.6	11.0
08/28/2013 15:42	79	9.2	10.3
08/28/2013 15:43	95	10.4	9.0
08/28/2013 15:44	91	10.1	9.3
08/28/2013 15:45	90	9.8	9.6
08/28/2013 15:46	81	9.2	10.3
08/28/2013 15:47	80	9.9	9.5
08/28/2013 15:48	72	9.3	10.2
08/28/2013 15:49	70	10.0	9.4
08/28/2013 15:50	67	9.5	10.0
08/28/2013 15:51	60	9.2	10.3
Raw Average =	70	9.8	9.6
O2 Corrected Avg. =	86		
Period % Recovery =	100.0	100.0	100.0

Date/Time Printed: 08/28/2013 15:53

Stack Rata Report

RH 9

COVANTA ENERGY

Company: Covanta Huntington, Inc.
Report Name: UNIT #2 STACK RATA

Start of Report: 08/28/2013 15:28
End of Report: 08/28/2013 15:51

Validation: Valid Data Only

	NOxs	SO2S	COlow	COhigh	CO2	O2	Steam Flow
Group#-Channel#	G25-C10	G25-C9	G25-C3	G25-C5	G25-C8	G25-C7	G25-C19
Long Descrip.	U-2 NOx S	U-2 SO2 S	U-2 CO St	U-2 CO Se	U-2 CO2 S	U-2 O2 St	U-2 Steam
Short Descrip.	NOxs	SO2s	COs LoRng	COs	CO2s	O2s	Steam
Units	ppm	ppm	ppm	ppm	%	%	K#/Hr
Range	0-500	0-200	0-200	0-2000	0-20	0-25	0-100
08/28/2013 15:28	98.0	0	9	9	9.7	9.6	83.9
08/28/2013 15:29	101.0	0	8	8	9.6	9.7	83.5
08/28/2013 15:30	99.0	0	7	7	9.6	9.7	83.9
08/28/2013 15:31	100.0	0	7	7	9.9	9.5	84.1
08/28/2013 15:32	100.0	0	7	7	9.9	9.4	84.2
08/28/2013 15:33	107.0	0	6	6	9.5	9.8	84.1
08/28/2013 15:34	103.0	0	5	5	9.6	9.7	84.3
08/28/2013 15:35	85.0	0	5	5	9.5	9.7	84.0
08/28/2013 15:36	62.0	0	5	5	8.9	10.5	83.1
08/28/2013 15:37	59.0	0	6	6	8.9	10.4	82.9
08/28/2013 15:38	80.0	0	7	7	9.4	10.0	83.4
08/28/2013 15:39	148.0	0	8	8	10.4	8.7	84.8
08/28/2013 15:40	142.0	0	4	4	9.5	10.1	83.8
08/28/2013 15:41	65.0	0	3	3	8.3	11.2	82.5
08/28/2013 15:42	55.0	0	7	7	8.8	10.5	83.0
08/28/2013 15:43	91.0	0	9	9	9.9	9.3	83.5
08/28/2013 15:44	94.0	0	6	6	9.7	9.6	83.7
08/28/2013 15:45	76.0	0	7	7	9.4	9.9	83.4
08/28/2013 15:46	64.0	0	8	8	8.9	10.6	83.3
08/28/2013 15:47	84.0	0	10	10	9.5	9.9	83.0
08/28/2013 15:48	91.0	0	8	8	9.0	10.5	82.8
08/28/2013 15:49	83.0	0	10	10	9.5	9.7	82.8
08/28/2013 15:50	92.0	0	8	8	9.2	10.3	82.0
08/28/2013 15:51	91.0	0	7	7	8.9	10.6	81.1
Raw Average =	90	0	6.9	6.9	9.4	9.9	83.3
O2 Corrected Avg. =	114	0	8	8			
Lbs./Hour Avg. =	29.61	0.00	1.38				
Period % Recovery =	100.0	100.0	100.0	100.0	100.0	100.0	100.0

Date/Time Printed: 08/28/2013 15:53

R#10

Economizer Rata Report

COVANTA ENERGY

Company: Covanta Huntington, Inc.
Report Name: UNIT #2 ECON RATA

Start of Report: 08/28/2013 16:09
End of Report: 08/28/2013 16:32

Validation: Valid Data Only

	SO2e	CO2e	O2e
Group#-Channel#	G25-C6	G25-C2	G25-C1
Long Descrip.	U-2 SO2 E	U-2 CO2 E	U-2 O2 Ec
Short Descrip.	SO2e	CO2e	O2e
Units	ppm	%	%
Range	0-500	0-20	0-25
08/28/2013 16:09	34	10.2	9.1
08/28/2013 16:10	32	9.5	9.9
08/28/2013 16:11	32	10.1	9.2
08/28/2013 16:12	33	9.8	9.6
08/28/2013 16:13	37	10.5	8.7
08/28/2013 16:14	39	10.1	9.2
08/28/2013 16:15			
08/28/2013 16:16		8.4	
08/28/2013 16:17	38 <	9.6	9.6 <
08/28/2013 16:18	43	9.5	9.8
08/28/2013 16:19	45	9.0	10.5
08/28/2013 16:20	53	9.2	10.3
08/28/2013 16:21	60	10.0	9.4
08/28/2013 16:22	86	11.0	8.3
08/28/2013 16:23	98	10.2	9.3
08/28/2013 16:24	82	9.1	10.4
08/28/2013 16:25	88	9.4	10.1
08/28/2013 16:26	94	9.7	9.8
08/28/2013 16:27	100	10.2	9.3
08/28/2013 16:28	102	10.6	8.9
08/28/2013 16:29	103	10.6	8.9
08/28/2013 16:30	96	10.3	9.2
08/28/2013 16:31	100	10.5	9.0
08/28/2013 16:32	98	10.5	9.0
Raw Average =	67	9.9	9.4
O2 Corrected Avg. =	82		
Period % Recovery =	95.7	100.0	95.7

Date/Time Printed: 08/28/2013 16:33

R #10

Stack Rata Report

COVANTA ENERGY

Company: Covanta Huntington, Inc.
Report Name: UNIT #2 STACK RATA

Start of Report: 08/28/2013 16:09
End of Report: 08/28/2013 16:32

Validation: Valid Data Only

	NOxs	SO2S	COlow	COhigh	CO2	O2	Steam Flow
Group#-Channel#	G25-C10	G25-C9	G25-C3	G25-C5	G25-C8	G25-C7	G25-C19
Long Descrip.	U-2 NOx S	U-2 SO2 S	U-2 CO St	U-2 CO Se	U-2 CO2 S	U-2 O2 St	U-2 Steam
Short Descrip.	NOxs	SO2s	COs LoRng	COs	CO2s	O2s	Steam
Units	ppm	ppm	ppm	ppm	%	%	K#/Hr
Range	0-500	0-200	0-200	0-2000	0-20	0-25	0-100
08/28/2013 16:09	80.0	0	8	8	9.9	9.4	82.4
08/28/2013 16:10	67.0	0	10	10	9.2	10.1	82.0
08/28/2013 16:11	80.0	0	9	9	9.6	9.6	81.4
08/28/2013 16:12	85.0	0	8	8	9.5	9.8	81.5
08/28/2013 16:13	96.0	0	7	7	10.0	9.1	81.8
08/28/2013 16:14	102.0	0	7	7	9.8	9.4	82.1
08/28/2013 16:15							
08/28/2013 16:16							
08/28/2013 16:17	94.0 <	0 <	7 <	7 <	9.9	9.5 <	82.5
08/28/2013 16:18	72.0	0	7	7	9.4	9.9	81.9
08/28/2013 16:19	65.0	0	10	10	8.8	10.6	80.8
08/28/2013 16:20	74.0	0	13	13	8.9	10.4	80.4
08/28/2013 16:21	104.0	0	16	16	9.7	9.6	81.0
08/28/2013 16:22	122.0	0	15	15	10.6	8.5	82.2
08/28/2013 16:23	98.0	0	11	11	9.8	9.6	81.8
08/28/2013 16:24	81.0	0	10	10	8.8	10.6	80.9
08/28/2013 16:25	87.0	0	14	14	9.1	10.3	80.4
08/28/2013 16:26	81.0	0	17	17	9.3	10.0	80.4
08/28/2013 16:27	87.0	0	20	20	9.8	9.5	80.8
08/28/2013 16:28	105.0	0	14	14	10.2	9.1	81.8
08/28/2013 16:29	110.0	0	13	13	10.1	9.2	82.3
08/28/2013 16:30	104.0	0	10	10	9.8	9.7	82.6
08/28/2013 16:31	59.0	0	10	10	7.2	12.8	83.0
08/28/2013 16:32							
Raw Average =	88	0	11.2	10.7	9.4	9.8	81.6
O2 Corrected Avg. =	110	0	14	13			
Lbs./Hour Avg. =	28.09	0.00	2.17				
Period % Recovery =	91.3	91.3	91.3	91.3	95.7	91.3	100.0

Date/Time Printed: 08/28/2013 16:33

R#1

Economizer Rata Report

COVANTA ENERGY

Company: Covanta Huntington, Inc.
Report Name: UNIT #3 ECON RATA

Start of Report: 08/29/2013 08:04
End of Report: 08/29/2013 08:27 **Validation:** Valid Data Only

	SO2e	CO2e	O2e
Group#-Channel#	G38-C6	G38-C2	G38-C1
Long Descrip.	U-3 SO2 E	U-3 CO2 E	U-3 O2 Ec
Short Descrip.	SO2e	CO2e	O2e
Units	ppm	%	%
Range	0-500	0-20	0-25
08/29/2013 08:04	43	9.1	10.8
08/29/2013 08:05	48	9.4	10.5
08/29/2013 08:06	51	9.4	10.5
08/29/2013 08:07	54	9.7	10.2
08/29/2013 08:08	51	9.5	10.5
08/29/2013 08:09	53	9.5	10.3
08/29/2013 08:10	50	9.0	10.9
08/29/2013 08:11	50	9.2	10.7
08/29/2013 08:12	51	9.5	10.5
08/29/2013 08:13	54	9.8	10.0
08/29/2013 08:14	49	9.6	10.2
08/29/2013 08:15	46	9.3	10.7
08/29/2013 08:16	45	9.3	10.6
08/29/2013 08:17	49	9.6	10.3
08/29/2013 08:18	51	9.8	10.0
08/29/2013 08:19	50	9.4	10.5
08/29/2013 08:20	51	9.9	9.9
08/29/2013 08:21	58	10.4	9.4
08/29/2013 08:22	58	10.1	9.7
08/29/2013 08:23	58	9.7	10.1
08/29/2013 08:24	56	9.4	10.4
08/29/2013 08:25	60	9.8	10.0
08/29/2013 08:26	67	10.1	9.7
08/29/2013 08:27	61	9.7	10.1
Raw Average =	52	9.5	10.2
O2 Corrected Avg. =	68		
Period % Recovery =	100.0	100.0	100.0

Date/Time Printed: 08/29/2013 08:31

Stack Rata Report

R#1

COVANTA ENERGY

Company: Covanta Huntington, Inc.
Report Name: UNIT #3 STACK RATA

Start of Report: 08/29/2013 08:04
End of Report: 08/29/2013 08:27

Validation: Valid Data Only

	NOxs	SO2S	COlow	COhigh	CO2	O2	Steam Flow
Group#-Channel#	G38-C10	G38-C9	G38-C3	G38-C5	G38-C8	G38-C7	G38-C19
Long Descrip.	U-3 NOx S	U-3 SO2 S	U-3 CO St	U-3 CO Se	U-3 CO2 S	U-3 O2 St	U-3 Steam
Short Descrip.	NOxs	SO2s	COs LoRng	COs	CO2s	O2s	Steam
Units	ppm	ppm	ppm	ppm	%	%	K#/Hr
Range	0-500	0-200	0-200	0-2000	0-20	0-25	0-100
08/29/2013 08:04	76	0	14	14	8.4	11.3	82.0
08/29/2013 08:05	64	0	17	17	8.7	11.0	82.0
08/29/2013 08:06	59	0	17	17	8.7	11.1	82.0
08/29/2013 08:07	67	0	18	18	9.0	10.8	82.0
08/29/2013 08:08	94	0	14	14	8.7	11.0	82.0
08/29/2013 08:09	89	0	10	10	8.9	10.9	82.0
08/29/2013 08:10	59	0	14	14	8.4	11.4	81.0
08/29/2013 08:11	68	0	15	15	8.5	11.3	81.0
08/29/2013 08:12	72	0	12	12	7.1	12.8	81.0
08/29/2013 08:13	80	0	21	21	9.1	10.6	81.0
08/29/2013 08:14	87	0	20	20	8.9	10.8	81.0
08/29/2013 08:15	74	0	17	17	8.5	11.2	80.0
08/29/2013 08:16	67	0	16	16	8.6	11.2	79.0
08/29/2013 08:17	82	0	15	15	8.8	10.9	79.0
08/29/2013 08:18	89	0	14	14	9.0	10.7	80.0
08/29/2013 08:19	87	0	17	17	8.7	11.0	79.0
08/29/2013 08:20	92	0	21	21	9.1	10.6	79.0
08/29/2013 08:21	100	0	21	21	9.6	10.1	80.0
08/29/2013 08:22	94	0	16	16	9.3	10.4	81.0
08/29/2013 08:23	79	0	16	16	9.1	10.6	80.0
08/29/2013 08:24	72	0	20	20	8.7	10.9	81.0
08/29/2013 08:25	71	0	20	20	9.0	10.6	82.0
08/29/2013 08:26	77	0	22	22	9.4	10.3	82.0
08/29/2013 08:27	84	0	17	17	9.0	10.7	82.0
Raw Average =	78	0	16.8	16.8	8.8	10.9	80.8
O2 Corrected Avg. =	109	0	23	23			
Lbs./Hour Avg. =	26.61	0.00	3.47				
Period % Recovery =	100.0	100.0	100.0	100.0	100.0	100.0	100.0

Date/Time Printed: 08/29/2013 08:32

Economizer Rata Report

R#2

COVANTA ENERGY

Company: Covanta Huntington, Inc.
Report Name: UNIT #3 ECON RATA

Start of Report: 08/29/2013 08:46
End of Report: 08/29/2013 09:09

Validation: Valid Data Only

	SO2e	CO2e	O2e
Group#-Channel#	G38-C6	G38-C2	G38-C1
Long Descrip.	U-3 SO2 E	U-3 CO2 E	U-3 O2 Ec
Short Descrip.	SO2e	CO2e	O2e
Units	ppm	%	%
Range	0-500	0-20	0-25
08/29/2013 08:46	63	9.0	10.9
08/29/2013 08:47	64	9.2	10.6
08/29/2013 08:48	64	9.1	10.7
08/29/2013 08:49	72	9.6	10.2
08/29/2013 08:50	70	9.4	10.3
08/29/2013 08:51	62	9.2	10.6
08/29/2013 08:52	60	9.2	10.6
08/29/2013 08:53	62	9.5	10.2
08/29/2013 08:54	59	9.2	10.6
08/29/2013 08:55	60	9.2	10.6
08/29/2013 08:56	66	9.2	10.5
08/29/2013 08:57	61	8.8	11.0
08/29/2013 08:58	62	9.3	10.6
08/29/2013 08:59	67	9.7	10.0
08/29/2013 09:00	68	9.7	10.0
08/29/2013 09:01	69	9.4	10.3
08/29/2013 09:02	68	9.2	10.6
08/29/2013 09:03	62	8.9	11.0
08/29/2013 09:04	64	8.9	10.9
08/29/2013 09:05	69	9.3	10.5
08/29/2013 09:06	74	9.6	10.1
08/29/2013 09:07	66	9.3	10.4
08/29/2013 09:08	60	9.0	10.8
08/29/2013 09:09	58	9.1	10.7
Raw Average =	64	9.2	10.5
O2 Corrected Avg. =	86		
Period % Recovery =	100.0	100.0	100.0

Date/Time Printed: 08/29/2013 09:12

Stack Rata Report

✓ R#2

COVANTA ENERGY

Company: Covanta Huntington, Inc.
Report Name: UNIT #3 STACK RATA

Start of Report: 08/29/2013 08:46
End of Report: 08/29/2013 09:09

Validation: Valid Data Only

	NOxs	SO2S	COlow	COhigh	CO2	O2	Steam Flow
Group#-Channel#	G38-C10	G38-C9	G38-C3	G38-C5	G38-C8	G38-C7	G38-C19
Long Descrip.	U-3 NOx S	U-3 SO2 S	U-3 CO St	U-3 CO Se	U-3 CO2 S	U-3 O2 St	U-3 Steam
Short Descrip.	NOxs	SO2s	COs LoRng	COs	CO2s	O2s	Steam
Units	ppm	ppm	ppm	ppm	%	%	K#/Hr
Range	0-500	0-200	0-200	0-2000	0-20	0-25	0-100
08/29/2013 08:46	71	0	34	34	7.8	12.0	78.0
08/29/2013 08:47	78	0	38	38	8.2	11.6	78.0
08/29/2013 08:48	69	0	35	35	7.5	12.2	78.0
08/29/2013 08:49	78	0	34	34	8.7	10.8	78.0
08/29/2013 08:50	81	0	25	25	8.7	10.9	78.0
08/29/2013 08:51	87	0	21	21	7.5	12.3	78.0
08/29/2013 08:52	86	0	26	26	8.4	11.1	79.0
08/29/2013 08:53	77	0	26	26	8.8	10.8	79.0
08/29/2013 08:54	79	0	21	21	8.5	11.1	79.0
08/29/2013 08:55	75	0	22	22	8.5	11.1	79.0
08/29/2013 08:56	78	0	21	21	8.6	11.0	79.0
08/29/2013 08:57	77	0	22	22	8.2	11.5	79.0
08/29/2013 08:58	82	0	24	24	8.5	11.1	79.0
08/29/2013 08:59	88	0	25	25	8.9	10.7	80.0
08/29/2013 09:00	90	0	19	19	8.9	10.6	81.0
08/29/2013 09:01	87	0	17	17	8.7	10.9	81.0
08/29/2013 09:02	75	0	22	22	8.5	11.1	81.0
08/29/2013 09:03	70	0	25	25	8.2	11.5	80.0
08/29/2013 09:04	67	0	19	19	8.2	11.4	80.0
08/29/2013 09:05	74	0	19	19	8.6	11.0	81.0
08/29/2013 09:06	76	1	19	19	8.9	10.7	81.0
08/29/2013 09:07	80	1	23	23	8.7	11.0	81.0
08/29/2013 09:08	83	1	19	19	8.3	11.3	80.0
08/29/2013 09:09	82	1	23	23	8.4	11.3	80.0
Raw Average =	78	0	24.1	24.1	8.4	11.2	79.4
O2 Corrected Avg. =	112	0	34	34			
Lbs./Hour Avg. =	27.41	0.08	5.11				
Period % Recovery =	100.0	100.0	100.0	100.0	100.0	100.0	100.0

Date/Time Printed: 08/29/2013 09:12

R 03

Economizer Rata Report

COVANTA ENERGY

Company: Covanta Huntington, Inc.
Report Name: UNIT #3 ECON RATA

Start of Report: 08/29/2013 09:29
End of Report: 08/29/2013 09:52 **Validation:** Valid Data Only

	SO2e		CO2e	O2e	
Group#-Channel#	G38-C6		G38-C2	G38-C1	
Long Descrip.	U-3 SO2 E		U-3 CO2 E	U-3 O2 Ec	
Short Descrip.	SO2e		CO2e	O2e	
Units	ppm		%	%	
Range	0-500		0-20	0-25	
08/29/2013 09:29	43		9.5	10.4	
08/29/2013 09:30					
08/29/2013 09:31			6.7		
08/29/2013 09:32	31	<	6.0	12.7	<
08/29/2013 09:33	42		9.2	10.8	
08/29/2013 09:34	46		9.4	10.4	
08/29/2013 09:35	44		9.0	10.9	
08/29/2013 09:36	45		9.3	10.7	
08/29/2013 09:37	48		9.5	10.4	
08/29/2013 09:38	53		10.0	9.9	
08/29/2013 09:39	50		9.8	10.1	
08/29/2013 09:40	48		9.4	10.5	
08/29/2013 09:41	47		9.3	10.6	
08/29/2013 09:42	50		9.8	10.1	
08/29/2013 09:43	51		9.7	10.2	
08/29/2013 09:44	51		9.7	10.3	
08/29/2013 09:45	56		9.8	10.1	
08/29/2013 09:46	55		9.7	10.2	
08/29/2013 09:47	57		9.7	10.1	
08/29/2013 09:48	49		9.7	10.2	
08/29/2013 09:49	49		10.0	9.7	
08/29/2013 09:50	47		9.6	10.2	
08/29/2013 09:51	43		9.3	10.6	
08/29/2013 09:52	43		9.7	10.2	
Raw Average =	47		9.3	10.4	
O2 Corrected Avg. =	63				
Period % Recovery =	95.7		100.0	95.7	

Date/Time Printed: 08/29/2013 09:55

R#3

Stack Rata Report

COVANTA ENERGY

Company: Covanta Huntington, Inc.
Report Name: UNIT #3 STACK RATA

Start of Report: 08/29/2013 09:29
End of Report: 08/29/2013 09:52 **Validation:** Valid Data Only

	NOxs	SO2S	COlow	COhigh	CO2	O2	Steam Flow
Group#-Channel#	G38-C10	G38-C9	G38-C3	G38-C5	G38-C8	G38-C7	G38-C19
Long Descrip.	U-3 NOx S	U-3 SO2 S	U-3 CO St	U-3 CO Se	U-3 CO2 S	U-3 O2 St	U-3 Steam
Short Descrip.	NOxs	SO2s	COs LoRng	COs	CO2s	O2s	Steam
Units	ppm	ppm	ppm	ppm	%	%	K#/Hr
Range	0-500	0-200	0-200	0-2000	0-20	0-25	0-100
08/29/2013 09:29	89	0	18	18	8.8	11.0	82.0
08/29/2013 09:30							
08/29/2013 09:31							
08/29/2013 09:32	56 <	0 <	17 <	17 <	8.9	11.0 <	83.0
08/29/2013 09:33	49	0	19	19	8.6	11.1	83.0
08/29/2013 09:34	69	0	16	16	8.7	11.0	82.0
08/29/2013 09:35	76	0	14	14	8.3	11.5	81.0
08/29/2013 09:36	88	0	17	17	8.5	11.2	81.0
08/29/2013 09:37	90	0	17	17	8.7	11.0	81.0
08/29/2013 09:38	88	0	18	18	9.2	10.5	81.0
08/29/2013 09:39	80	0	14	14	9.1	10.7	81.0
08/29/2013 09:40	71	0	16	16	8.7	11.1	80.0
08/29/2013 09:41	76	0	15	15	8.6	11.1	80.0
08/29/2013 09:42	87	0	18	18	9.0	10.7	80.0
08/29/2013 09:43	89	0	17	17	9.1	10.7	79.0
08/29/2013 09:44	80	0	17	17	8.9	10.8	79.0
08/29/2013 09:45	81	0	16	16	9.0	10.7	79.0
08/29/2013 09:46	74	0	16	16	8.9	10.8	79.0
08/29/2013 09:47	80	0	15	15	9.0	10.7	79.0
08/29/2013 09:48	89	0	12	12	8.9	10.8	80.0
08/29/2013 09:49	99	0	15	15	9.3	10.3	80.0
08/29/2013 09:50	84	0	12	12	9.0	10.7	80.0
08/29/2013 09:51	71	0	11	11	8.6	11.1	80.0
08/29/2013 09:52	83	0	14	14	8.9	10.8	80.0
Raw Average =	79	0	15.6	15.6	8.8	10.8	80.6
O2 Corrected Avg. =	110	0	21	21			
Lbs./Hour Avg. =	26.88	0.00	3.21				
Period % Recovery =	95.7	95.7	95.7	95.7	100.0	95.7	100.0

Date/Time Printed: 08/29/2013 09:55

Economizer Rata Report

R#4

COVANTA ENERGY

Company: Covanta Huntington, Inc. ✓
Report Name: UNIT #3 ECON RATA

Start of Report: 08/29/2013 10:08
End of Report: 08/29/2013 10:31 **Validation:** Valid Data Only

	SO2e	CO2e	O2e
Group#-Channel#	G38-C6	G38-C2	G38-C1
Long Descrip.	U-3 SO2 E	U-3 CO2 E	U-3 O2 Ec
Short Descrip.	SO2e	CO2e	O2e
Units	ppm	%	%
Range	0-500	0-20	0-25
08/29/2013 10:08	34	9.7	10.3
08/29/2013 10:09	34	10.0	9.9
08/29/2013 10:10	39	10.1	9.7
08/29/2013 10:11	39	9.8	10.1
08/29/2013 10:12	41	9.7	10.2
08/29/2013 10:13	41	9.7	10.3
08/29/2013 10:14	39	9.9	10.0
08/29/2013 10:15	39	9.9	10.1
08/29/2013 10:16	40	10.0	9.9
08/29/2013 10:17	42	10.0	9.8
08/29/2013 10:18	40	10.4	9.4
08/29/2013 10:19	40	10.5	9.3
08/29/2013 10:20	40	10.3	9.4
08/29/2013 10:21	39	10.3	9.5
08/29/2013 10:22	40	10.6	9.1
08/29/2013 10:23	39	10.2	9.5
08/29/2013 10:24	33	9.2	10.7
08/29/2013 10:25	31	9.0	10.9
08/29/2013 10:26	36	9.7	10.2
08/29/2013 10:27	39	9.8	9.9
08/29/2013 10:28	43	9.6	10.2
08/29/2013 10:29	40	9.4	10.5
08/29/2013 10:30			
08/29/2013 10:31		6.9	
Raw Average =	38	9.7	9.9
O2 Corrected Avg. =	48		
Period % Recovery =	95.7	100.0	95.7

Date/Time Printed: 08/29/2013 10:34

RFH

Stack Rata Report

COVANTA ENERGY

Company: Covanta Huntington, Inc. ✓
Report Name: UNIT #3 STACK RATA

Start of Report: 08/29/2013 10:08
End of Report: 08/29/2013 10:31 **Validation:** Valid Data Only

	NOxs	SO2S	COlow	COhigh	CO2	O2	Steam Flow
Group#-Channel#	G38-C10	G38-C9	G38-C3	G38-C5	G38-C8	G38-C7	G38-C19
Long Descrip.	U-3 NOx S	U-3 SO2 S	U-3 CO St	U-3 CO Se	U-3 CO2 S	U-3 O2 St	U-3 Steam
Short Descrip.	NOxs	SO2s	COs LoRng	COs	CO2s	O2s	Steam
Units	ppm	ppm	ppm	ppm	%	%	K#/Hr
Range	0-500	0-200	0-200	0-2000	0-20	0-25	0-100
08/29/2013 10:08	82	0	14	14	9.0	10.9	79.0
08/29/2013 10:09	89	0	15	15	9.2	10.6	80.0
08/29/2013 10:10	84	0	12	12	9.4	10.3	80.0
08/29/2013 10:11	80	0	15	15	9.1	10.7	80.0
08/29/2013 10:12	87	0	15	15	9.0	10.8	80.0
08/29/2013 10:13	87	0	16	16	8.9	10.8	80.0
08/29/2013 10:14	89	0	15	15	9.1	10.6	80.0
08/29/2013 10:15	92	0	14	14	9.1	10.6	80.0
08/29/2013 10:16	105	0	14	14	9.3	10.5	81.0
08/29/2013 10:17	105	0	12	12	9.3	10.4	81.0
08/29/2013 10:18	95	0	11	11	9.6	10.1	82.0
08/29/2013 10:19	94	0	10	10	9.7	10.0	83.0
08/29/2013 10:20	90	0	8	8	9.6	10.0	83.0
08/29/2013 10:21	82	0	6	6	9.5	10.2	84.0
08/29/2013 10:22	91	0	7	7	9.8	9.8	85.0
08/29/2013 10:23	100	0	7	7	9.6	10.1	85.0
08/29/2013 10:24	61	0	7	7	8.6	11.2	84.0
08/29/2013 10:25	47	0	8	8	8.4	11.4	83.0
08/29/2013 10:26	86	0	10	10	8.8	10.8	83.0
08/29/2013 10:27	98	0	9	9	9.1	10.5	83.0
08/29/2013 10:28	72	0	11	11	8.9	10.7	83.0
08/29/2013 10:29	50	0	12	12	8.6	11.0	83.0
08/29/2013 10:30							
08/29/2013 10:31							
Raw Average =	84	0	11.2	11.2	9.1	10.5	81.9
O2 Corrected Avg. =	113	0	15	15			
Lbs./Hour Avg. =	28.19	0.00	2.28				
Period % Recovery =	95.7	95.7	95.7	95.7	100.0	95.7	100.0

Date/Time Printed: 08/29/2013 10:33

Economizer Rata Report

R#5

COVANTA ENERGY

Company: Covanta Huntington, Inc.
Report Name: UNIT #3 ECON RATA

Start of Report: 08/29/2013 10:49
End of Report: 08/29/2013 11:12 **Validation:** Valid Data Only

	SO2e	CO2e	O2e
Group#-Channel#	G38-C6	G38-C2	G38-C1
Long Descrip.	U-3 SO2 E	U-3 CO2 E	U-3 O2 Ec
Short Descrip.	SO2e	CO2e	O2e
Units	ppm	%	%
Range	0-500	0-20	0-25
08/29/2013 10:49	65	10.6	9.1
08/29/2013 10:50	60	10.5	9.2
08/29/2013 10:51	61	9.9	9.9
08/29/2013 10:52	69	9.9	10.0
08/29/2013 10:53	76	9.9	10.0
08/29/2013 10:54	75	10.1	9.7
08/29/2013 10:55	74	10.0	9.8
08/29/2013 10:56	74	9.7	10.1
08/29/2013 10:57	76	9.7	10.2
08/29/2013 10:58	89	10.4	9.5
08/29/2013 10:59	109	10.5	9.2
08/29/2013 11:00	106	10.3	9.6
08/29/2013 11:01	115	10.1	9.7
08/29/2013 11:02	117	10.1	9.8
08/29/2013 11:03	139	10.2	9.6
08/29/2013 11:04	142	10.3	9.5
08/29/2013 11:05	137	9.9	10.0
08/29/2013 11:06	135	10.1	9.9
08/29/2013 11:07	147	10.2	9.7
08/29/2013 11:08	154	10.1	9.8
08/29/2013 11:09	162	9.9	10.0
08/29/2013 11:10	158	10.0	9.9
08/29/2013 11:11	147	10.4	9.5
08/29/2013 11:12	143	10.3	9.5
Raw Average =	109	10.1	9.7
O2 Corrected Avg. =	136		
Period % Recovery =	100.0	100.0	100.0

Date/Time Printed: 08/29/2013 11:15

R#5

Stack Rata Report

COVANTA ENERGY

Company: Covanta Huntington, Inc. ✓
Report Name: UNIT #3 STACK RATA

Start of Report: 08/29/2013 10:49
End of Report: 08/29/2013 11:12 **Validation:** Valid Data Only

	NOxs	SO2S	COlow	COhigh	CO2	O2	Steam Flow
Group#-Channel#	G38-C10	G38-C9	G38-C3	G38-C5	G38-C8	G38-C7	G38-C19
Long Descrip.	U-3 NOx S	U-3 SO2 S	U-3 CO St	U-3 CO Se	U-3 CO2 S	U-3 O2 St	U-3 Steam
Short Descrip.	NOxs	SO2s	COs LoRng	COs	CO2s	O2s	Steam
Units	ppm	ppm	ppm	ppm	%	%	K#/Hr
Range	0-500	0-200	0-200	0-2000	0-20	0-25	0-100
08/29/2013 10:49	120	0	14	14	9.8	9.8	83.0
08/29/2013 10:50	109	0	12	12	9.7	9.8	84.0
08/29/2013 10:51	73	0	12	12	9.2	10.4	83.0
08/29/2013 10:52	65	0	15	15	9.1	10.6	83.0
08/29/2013 10:53	82	0	18	18	9.1	10.5	83.0
08/29/2013 10:54	85	0	18	18	9.3	10.3	82.0
08/29/2013 10:55	82	0	17	17	9.2	10.4	82.0
08/29/2013 10:56	69	0	17	17	9.0	10.7	81.0
08/29/2013 10:57	55	0	19	19	8.9	10.8	81.0
08/29/2013 10:58	74	0	21	21	9.5	10.2	81.0
08/29/2013 10:59	106	0	19	19	9.8	9.9	82.0
08/29/2013 11:00	100	0	16	16	9.5	10.2	82.0
08/29/2013 11:01	77	0	20	20	9.4	10.3	81.0
08/29/2013 11:02	84	0	18	18	9.3	10.4	82.0
08/29/2013 11:03	91	1	19	19	9.5	10.2	82.0
08/29/2013 11:04	89	2	21	21	9.5	10.2	82.0
08/29/2013 11:05	86	3	22	22	9.2	10.6	81.0
08/29/2013 11:06	77	4	23	23	9.2	10.5	81.0
08/29/2013 11:07	81	4	27	27	9.4	10.3	81.0
08/29/2013 11:08	68	5	28	28	9.3	10.5	81.0
08/29/2013 11:09	72	6	30	30	9.2	10.6	80.0
08/29/2013 11:10	83	7	31	31	9.3	10.5	80.0
08/29/2013 11:11	98	8	24	24	9.5	10.1	81.0
08/29/2013 11:12	101	8	21	21	9.5	10.2	81.0
Raw Average =	84	2	20.0	20.0	9.3	10.3	81.6
O2 Corrected Avg. =	111	2	26	26			
Lbs./Hour Avg. =	27.23	0.89	3.94				
Period % Recovery =	100.0	100.0	100.0	100.0	100.0	100.0	100.0

Date/Time Printed: 08/29/2013 11:15

R #6

Economizer Rata Report

COVANTA ENERGY

Company: Covanta Huntington, Inc.
Report Name: UNIT #3 ECON RATA

Start of Report: 08/29/2013 11:28
End of Report: 08/29/2013 11:51 **Validation:** Valid Data Only

	SO2e		CO2e	O2e	
Group#-Channel#	G38-C6		G38-C2	G38-C1	
Long Descrip.	U-3 SO2 E		U-3 CO2 E	U-3 O2 Ec	
Short Descrip.	SO2e		CO2e	O2e	
Units	ppm		%	%	
Range	0-500		0-20	0-25	
08/29/2013 11:28	235		11.3	8.3	
08/29/2013 11:29	191		10.9	8.8	
08/29/2013 11:30					
08/29/2013 11:31			7.9		
08/29/2013 11:32	80	<	5.5	13.5	<
08/29/2013 11:33	103		8.0	12.1	
08/29/2013 11:34	142		9.4	10.5	
08/29/2013 11:35	171		10.3	9.5	
08/29/2013 11:36	164		10.5	9.3	
08/29/2013 11:37	156		10.2	9.5	
08/29/2013 11:38	164		9.8	9.9	
08/29/2013 11:39	151		9.5	10.4	
08/29/2013 11:40	131		10.1	9.7	
08/29/2013 11:41	115		9.7	10.2	
08/29/2013 11:42	110		10.1	9.8	
08/29/2013 11:43	111		10.4	9.4	
08/29/2013 11:44	117		11.1	8.6	
08/29/2013 11:45	113		11.1	8.5	
08/29/2013 11:46	90		9.6	10.2	
08/29/2013 11:47	81		9.2	10.7	
08/29/2013 11:48	87		9.4	10.6	
08/29/2013 11:49	102		10.3	9.5	
08/29/2013 11:50	101		10.5	9.2	
08/29/2013 11:51	96		10.8	9.0	
Raw Average =	127		9.8	9.8	
O2 Corrected Avg. =	161				
Period % Recovery =	95.7		100.0	95.7	

Date/Time Printed: 08/29/2013 12:03

Stack Rata Report

R#6

COVANTA ENERGY

Company: Covanta Huntington, Inc.
Report Name: UNIT #3 STACK RATA

Start of Report: 08/29/2013 11:28
End of Report: 08/29/2013 11:51

Validation: Valid Data Only

	NOxs	SO2S	COlow	COhigh	CO2	O2	Steam Flow
Group#-Channel#	G38-C10	G38-C9	G38-C3	G38-C5	G38-C8	G38-C7	G38-C19
Long Descrip.	U-3 NOx S	U-3 SO2 S	U-3 CO St	U-3 CO Se	U-3 CO2 S	U-3 O2 St	U-3 Steam
Short Descrip.	NOxs	SO2s	COs LoRng	COs	CO2s	O2s	Steam
Units	ppm	ppm	ppm	ppm	%	%	K#/Hr
Range	0-500	0-200	0-200	0-2000	0-20	0-25	0-100
08/29/2013 11:28	126	37	23	23	10.4	9.1	82.0
08/29/2013 11:29	97	25	16	16	10.1	9.4	84.0
08/29/2013 11:30							
08/29/2013 11:31							
08/29/2013 11:32	48 <	8 <	10 <	10 <	8.2	11.7 <	83.0
08/29/2013 11:33	44	6	14	14	7.5	12.3	82.0
08/29/2013 11:34	65	5	19	19	8.5	11.1	82.0
08/29/2013 11:35	117	8	19	19	9.5	10.1	82.0
08/29/2013 11:36	123	21	16	16	9.7	10.0	83.0
08/29/2013 11:37	105	27	17	17	9.5	10.1	83.0
08/29/2013 11:38	80	24	17	17	9.1	10.5	83.0
08/29/2013 11:39	70	17	20	20	8.8	10.9	82.0
08/29/2013 11:40	86	12	19	19	9.3	10.4	82.0
08/29/2013 11:41	93	10	17	17	9.0	10.7	81.0
08/29/2013 11:42	83	8	20	20	9.2	10.4	81.0
08/29/2013 11:43	91	6	21	21	9.7	10.0	82.0
08/29/2013 11:44	111	5	16	16	10.2	9.3	84.0
08/29/2013 11:45	125	5	15	15	10.4	9.2	84.0
08/29/2013 11:46	86	4	11	11	9.0	10.7	84.0
08/29/2013 11:47	54	3	15	15	8.5	11.2	84.0
08/29/2013 11:48	52	3	17	17	7.0	12.8	82.0
08/29/2013 11:49	85	3	20	20	8.8	10.8	82.0
08/29/2013 11:50	100	3	20	20	9.7	9.9	83.0
08/29/2013 11:51	108	3	19	19	10.0	9.7	83.0
Raw Average =	88	11	17.3	17.3	9.1	10.4	82.8
O2 Corrected Avg. =	118	14	23	23			
Lbs./Hour Avg. =	29.62	5.13	3.52				
Period % Recovery =	95.7	95.7	95.7	95.7	100.0	95.7	100.0

Date/Time Printed: 08/29/2013 12:03

R#7

Economizer Rata Report

COVANTA ENERGY

Company: Covanta Huntington, Inc.
Report Name: UNIT #3 ECON RATA

Start of Report: 08/29/2013 12:06
End of Report: 08/29/2013 12:29

Validation: Valid Data Only

	SO2e	CO2e	O2e
Group#-Channel#	G38-C6	G38-C2	G38-C1
Long Descrip.	U-3 SO2 E	U-3 CO2 E	U-3 O2 Ec
Short Descrip.	SO2e	CO2e	O2e
Units	ppm	%	%
Range	0-500	0-20	0-25
08/29/2013 12:06	78	9.4	10.5
08/29/2013 12:07	87	9.6	10.4
08/29/2013 12:08	95	9.9	10.0
08/29/2013 12:09	101	10.5	9.3
08/29/2013 12:10	98	10.2	9.7
08/29/2013 12:11	97	9.8	10.0
08/29/2013 12:12	96	9.5	10.5
08/29/2013 12:13	103	9.8	10.0
08/29/2013 12:14	107	9.9	9.9
08/29/2013 12:15	103	9.8	10.0
08/29/2013 12:16	93	9.3	10.6
08/29/2013 12:17	89	9.3	10.6
08/29/2013 12:18	95	9.7	10.2
08/29/2013 12:19	101	9.8	10.0
08/29/2013 12:20	89	9.3	10.7
08/29/2013 12:21	80	9.4	10.5
08/29/2013 12:22	84	9.7	10.1
08/29/2013 12:23	87	9.9	10.0
08/29/2013 12:24	92	10.1	9.7
08/29/2013 12:25	84	9.9	9.9
08/29/2013 12:26	75	9.4	10.5
08/29/2013 12:27	68	9.3	10.6
08/29/2013 12:28	67	9.7	10.2
08/29/2013 12:29	68	9.8	10.1
Raw Average =	89	9.7	10.1
O2 Corrected Avg. =	115		
Period % Recovery =	100.0	100.0	100.0

Date/Time Printed: 08/29/2013 13:01

R#7

Stack Rata Report

COVANTA ENERGY

Company: Covanta Huntington, Inc. ✓
Report Name: UNIT #3 STACK RATA

Start of Report: 08/29/2013 12:06
End of Report: 08/29/2013 12:29 **Validation:** Valid Data Only

	NOxs	SO2S	COlow	COhigh	CO2	O2	Steam Flow
Group#-Channel#	G38-C10	G38-C9	G38-C3	G38-C5	G38-C8	G38-C7	G38-C19
Long Descrip.	U-3 NOx S	U-3 SO2 S	U-3 CO St	U-3 CO Se	U-3 CO2 S	U-3 O2 St	U-3 Steam
Short Descrip.	NOxs	SO2s	COs LoRng	COs	CO2s	O2s	Steam
Units	ppm	ppm	ppm	ppm	%	%	K#/Hr
Range	0-500	0-200	0-200	0-2000	0-20	0-25	0-100
08/29/2013 12:06	49	2	12	12	8.7	11.0	83.0
08/29/2013 12:07	65	2	18	18	8.8	10.9	83.0
08/29/2013 12:08	84	2	17	17	9.1	10.7	83.0
08/29/2013 12:09	103	2	17	17	9.6	10.0	84.0
08/29/2013 12:10	91	3	16	16	9.5	10.2	84.0
08/29/2013 12:11	75	3	17	17	9.1	10.7	83.0
08/29/2013 12:12	70	3	17	17	8.8	11.0	83.0
08/29/2013 12:13	69	3	20	20	9.1	10.6	83.0
08/29/2013 12:14	79	4	18	18	9.2	10.5	83.0
08/29/2013 12:15	77	4	18	18	9.1	10.6	82.0
08/29/2013 12:16	60	4	19	19	8.7	11.2	81.0
08/29/2013 12:17	76	3	24	24	8.6	11.2	81.0
08/29/2013 12:18	99	3	25	25	8.9	10.8	81.0
08/29/2013 12:19	95	3	24	24	9.1	10.6	80.0
08/29/2013 12:20	71	2	22	22	8.6	11.2	79.0
08/29/2013 12:21	67	2	30	30	8.7	11.1	79.0
08/29/2013 12:22	85	2	28	28	9.0	10.7	79.0
08/29/2013 12:23	85	2	24	24	9.1	10.6	79.0
08/29/2013 12:24	86	2	20	20	9.4	10.3	80.0
08/29/2013 12:25	82	2	18	18	8.3	11.7	80.0
08/29/2013 12:26	67	2	22	22	8.3	11.4	80.0
08/29/2013 12:27	64	2	23	23	7.8	12.1	80.0
08/29/2013 12:28	90	2	21	21	8.9	10.8	80.0
08/29/2013 12:29	98	1	18	18	9.0	10.7	80.0
Raw Average =	78	2	20.3	20.3	8.8	10.8	81.2
O2 Corrected Avg. =	108	3	28	28			
Lbs./Hour Avg. =	26.52	1.17	4.17				
Period % Recovery =	100.0	100.0	100.0	100.0	100.0	100.0	100.0

Date/Time Printed: 08/29/2013 13:02

R # 8

Economizer Rata Report

COVANTA ENERGY

Company: Covanta Huntington, Inc.
Report Name: UNIT #3 ECON RATA

Start of Report: 08/29/2013 12:47
End of Report: 08/29/2013 13:10 **Validation:** Valid Data Only

	SO2e	CO2e	O2e
Group#-Channel#	G38-C6	G38-C2	G38-C1
Long Descrip.	U-3 SO2 E	U-3 CO2 E	U-3 O2 Ec
Short Descrip.	SO2e	CO2e	O2e
Units	ppm	%	%
Range	0-500	0-20	0-25
08/29/2013 12:47	72	10.9	8.8
08/29/2013 12:48	76	11.0	8.7
08/29/2013 12:49	67	10.0	9.7
08/29/2013 12:50	62	9.8	10.1
08/29/2013 12:51	66	9.7	10.2
08/29/2013 12:52	73	9.6	10.3
08/29/2013 12:53	75	9.7	10.1
08/29/2013 12:54	73	9.2	10.7
08/29/2013 12:55	74	8.9	11.1
08/29/2013 12:56	73	8.7	11.2
08/29/2013 12:57	87	8.9	11.1
08/29/2013 12:58	81	8.7	11.3
08/29/2013 12:59	73	8.2	11.8
08/29/2013 13:00	74	8.6	11.5
08/29/2013 13:01	95	9.4	10.6
08/29/2013 13:02	105	9.8	10.0
08/29/2013 13:03	112	10.1	9.8
08/29/2013 13:04	118	10.9	8.8
08/29/2013 13:05	114	10.7	9.0
08/29/2013 13:06	97	10.0	9.8
08/29/2013 13:07	85	9.3	10.6
08/29/2013 13:08	77	8.4	11.7
08/29/2013 13:09	89	9.0	11.0
08/29/2013 13:10	101	9.6	10.3
Raw Average =	84	9.5	10.3
O2 Corrected Avg. =	110		
Period % Recovery =	100.0	100.0	100.0

Date/Time Printed: 08/29/2013 13:13

Stack Rata Report

R#8

COVANTA ENERGY

Company: Covanta Huntington, Inc. ✓
Report Name: UNIT #3 STACK RATA

Start of Report: 08/29/2013 12:47
End of Report: 08/29/2013 13:10 **Validation:** Valid Data Only

	NOxs	SO2S	COlow	COhigh	CO2	O2	Steam Flow
Group#-Channel#	G38-C10	G38-C9	G38-C3	G38-C5	G38-C8	G38-C7	G38-C19
Long Descrip.	U-3 NOx S	U-3 SO2 S	U-3 CO St	U-3 CO Se	U-3 CO2 S	U-3 O2 St	U-3 Steam
Short Descrip.	NOxs	SO2s	COs LoRng	COs	CO2s	O2s	Steam
Units	ppm	ppm	ppm	ppm	%	%	K#/Hr
Range	0-500	0-200	0-200	0-2000	0-20	0-25	0-100
08/29/2013 12:47	92	0	14	14	10.1	9.5	83.0
08/29/2013 12:48	89	0	11	11	10.2	9.4	83.0
08/29/2013 12:49	94	0	11	11	9.4	10.3	82.0
08/29/2013 12:50	86	0	20	20	9.0	10.7	82.0
08/29/2013 12:51	74	0	20	20	8.9	10.8	81.0
08/29/2013 12:52	72	0	23	23	8.8	10.9	80.0
08/29/2013 12:53	79	0	18	18	8.9	10.8	80.0
08/29/2013 12:54	82	0	18	18	8.6	11.2	79.0
08/29/2013 12:55	79	0	18	18	8.1	11.6	78.0
08/29/2013 12:56	76	0	17	17	8.1	11.7	77.0
08/29/2013 12:57	71	0	18	18	8.1	11.6	77.0
08/29/2013 12:58	65	1	18	18	8.0	11.8	76.0
08/29/2013 12:59	69	1	19	19	7.5	12.3	75.0
08/29/2013 13:00	73	1	23	23	7.8	12.0	76.0
08/29/2013 13:01	84	1	23	23	8.6	11.2	77.0
08/29/2013 13:02	94	1	20	20	8.6	11.1	78.0
08/29/2013 13:03	91	2	18	18	8.5	11.3	80.0
08/29/2013 13:04	82	3	14	14	8.3	11.3	83.0
08/29/2013 13:05	90	3	16	16	9.9	9.7	84.0
08/29/2013 13:06	83	3	14	14	9.3	10.4	84.0
08/29/2013 13:07	70	3	10	10	8.6	11.1	83.0
08/29/2013 13:08	55	2	9	9	7.8	12.1	82.0
08/29/2013 13:09	64	2	16	16	8.2	11.6	81.0
08/29/2013 13:10	84	2	17	17	8.8	10.9	81.0
Raw Average =	79	1	16.8	16.8	8.6	11.0	80.0
O2 Corrected Avg. =	111	1	23	23			
Lbs./Hour Avg. =	26.96	0.49	3.50				
Period % Recovery =	100.0	100.0	100.0	100.0	100.0	100.0	100.0

Date/Time Printed: 08/29/2013 13:13

RHG

Economizer Rata Report

COVANTA ENERGY

Company: Covanta Huntington, Inc.
Report Name: UNIT #3 ECON RATA

Start of Report: 08/29/2013 13:27
End of Report: 08/29/2013 13:50

Validation: Valid Data Only

	SO2e		CO2e	O2e	
Group#-Channel#	G38-C6		G38-C2	G38-C1	
Long Descrip.	U-3 SO2 E		U-3 CO2 E	U-3 O2 Ec	
Short Descrip.	SO2e		CO2e	O2e	
Units	ppm		%	%	
Range	0-500		0-20	0-25	
08/29/2013 13:27	87		9.6	10.2	
08/29/2013 13:28	82		9.6	10.2	
08/29/2013 13:29	87		9.9	9.9	
08/29/2013 13:30					
08/29/2013 13:31			7.2		
08/29/2013 13:32	54	<	6.1	12.6	<
08/29/2013 13:33	69		9.3	10.5	
08/29/2013 13:34	74		9.9	9.9	
08/29/2013 13:35	74		10.0	9.7	
08/29/2013 13:36	68		9.9	9.8	
08/29/2013 13:37	73		10.1	9.7	
08/29/2013 13:38	69		10.3	9.3	
08/29/2013 13:39	62		10.0	9.7	
08/29/2013 13:40	57		9.8	9.9	
08/29/2013 13:41	58		10.1	9.7	
08/29/2013 13:42	62		10.1	9.6	
08/29/2013 13:43	60		9.9	9.8	
08/29/2013 13:44	63		9.9	9.9	
08/29/2013 13:45	63		10.0	9.8	
08/29/2013 13:46	61		9.8	10.0	
08/29/2013 13:47	61		9.8	10.0	
08/29/2013 13:48	67		10.0	9.8	
08/29/2013 13:49	81		10.5	9.2	
08/29/2013 13:50	74		9.9	9.9	
Raw Average =	68		9.6	9.9	
O2 Corrected Avg. =	86				
Period % Recovery =	95.7		100.0	95.7	

Date/Time Printed: 08/29/2013 13:54

Stack Rata Report

✓ R #9

COVANTA ENERGY

Company: Covanta Huntington, Inc.
Report Name: UNIT #3 STACK RATA

Start of Report: 08/29/2013 13:27
End of Report: 08/29/2013 13:50 **Validation:** Valid Data Only

	NOxs	SO2S	COlow	COhigh	CO2	O2	Steam Flow
Group#-Channel#	G38-C10	G38-C9	G38-C3	G38-C5	G38-C8	G38-C7	G38-C19
Long Descrip.	U-3 NOx S	U-3 SO2 S	U-3 CO St	U-3 CO Se	U-3 CO2 S	U-3 O2 St	U-3 Steam
Short Descrip.	NOxs	SO2s	COs LoRng	COs	CO2s	O2s	Steam
Units	ppm	ppm	ppm	ppm	%	%	K#/Hr
Range	0-500	0-200	0-200	0-2000	0-20	0-25	0-100
08/29/2013 13:27	93	4	12	12	8.9	10.7	81.0
08/29/2013 13:28	100	4	15	15	8.8	10.8	81.0
08/29/2013 13:29	82	3	14	14	9.1	10.5	81.0
08/29/2013 13:30							
08/29/2013 13:31							
08/29/2013 13:32	93	< 2	< 17	< 17	< 8.7	10.9	< 80.0
08/29/2013 13:33	101	2	19	19	8.8	10.9	80.0
08/29/2013 13:34	92	2	16	16	9.0	10.6	80.0
08/29/2013 13:35	83	2	16	16	9.3	10.3	80.0
08/29/2013 13:36	72	2	15	15	9.1	10.5	80.0
08/29/2013 13:37	85	1	18	18	9.2	10.4	81.0
08/29/2013 13:38	99	1	17	17	9.5	10.1	81.0
08/29/2013 13:39	91	1	14	14	8.8	10.9	82.0
08/29/2013 13:40	76	1	12	12	7.8	12.0	82.0
08/29/2013 13:41	76	1	11	11	8.9	10.6	82.0
08/29/2013 13:42	91	1	11	11	9.3	10.3	82.0
08/29/2013 13:43	85	1	12	12	9.1	10.5	82.0
08/29/2013 13:44	75	1	12	12	9.1	10.5	82.0
08/29/2013 13:45	79	1	12	12	9.1	10.5	82.0
08/29/2013 13:46	86	1	12	12	9.0	10.7	81.0
08/29/2013 13:47	87	1	17	17	9.0	10.6	81.0
08/29/2013 13:48	89	1	19	19	9.2	10.4	81.0
08/29/2013 13:49	96	0	16	16	9.6	9.9	82.0
08/29/2013 13:50	79	1	16	16	9.1	10.5	81.0
Raw Average =	86	1	14.6	14.6	8.9	10.6	81.1
O2 Corrected Avg. =	117	2	19	19			
Lbs./Hour Avg. =	29.00	0.71	2.98				
Period % Recovery =	95.7	95.7	95.7	95.7	100.0	95.7	100.0

Date/Time Printed: 08/29/2013 13:54

R#10

Economizer Rata Report

COVANTA ENERGY

Company: Covanta Huntington, Inc.
Report Name: UNIT #3 ECON RATA

Start of Report: 08/29/2013 14:06
End of Report: 08/29/2013 14:29 **Validation:** Valid Data Only

	SO2e	CO2e	O2e
Group#-Channel#	G38-C6	G38-C2	G38-C1
Long Descrip.	U-3 SO2 E	U-3 CO2 E	U-3 O2 Ec
Short Descrip.	SO2e	CO2e	O2e
Units	ppm	%	%
Range	0-500	0-20	0-25
08/29/2013 14:06	64	9.8	10.0
08/29/2013 14:07	73	10.4	9.4
08/29/2013 14:08	73	10.7	9.0
08/29/2013 14:09	69	10.6	9.2
08/29/2013 14:10	63	10.2	9.6
08/29/2013 14:11	62	10.3	9.5
08/29/2013 14:12	62	9.9	9.8
08/29/2013 14:13	54	9.4	10.5
08/29/2013 14:14	60	10.1	9.8
08/29/2013 14:15	65	10.0	9.8
08/29/2013 14:16	69	10.4	9.4
08/29/2013 14:17	70	10.6	9.2
08/29/2013 14:18	71	10.8	9.0
08/29/2013 14:19	71	10.4	9.3
08/29/2013 14:20	66	10.1	9.8
08/29/2013 14:21	68	10.1	9.7
08/29/2013 14:22	61	10.0	9.8
08/29/2013 14:23	67	10.4	9.4
08/29/2013 14:24	71	10.1	9.7
08/29/2013 14:25	73	10.1	9.7
08/29/2013 14:26	68	10.1	9.7
08/29/2013 14:27	62	9.8	10.0
08/29/2013 14:28	68	9.7	10.1
08/29/2013 14:29	71	9.9	9.9
Raw Average =	66	10.1	9.6
O2 Corrected Avg. =	82		
Period % Recovery =	100.0	100.0	100.0

Date/Time Printed: 08/29/2013 14:34

Stack Rata Report

✓ R#10

COVANTA ENERGY

Company: Covanta Huntington, Inc.
Report Name: UNIT #3 STACK RATA

Start of Report: 08/29/2013 14:06
End of Report: 08/29/2013 14:29 **Validation:** Valid Data Only

	NOxs	SO2S	COlow	COhigh	CO2	O2	Steam Flow
Group#-Channel#	G38-C10	G38-C9	G38-C3	G38-C5	G38-C8	G38-C7	G38-C19
Long Descrip.	U-3 NOx S	U-3 SO2 S	U-3 CO St	U-3 CO Se	U-3 CO2 S	U-3 O2 St	U-3 Steam
Short Descrip.	NOxs	SO2s	COs LoRng	COs	CO2s	O2s	Steam
Units	ppm	ppm	ppm	ppm	%	%	K#/Hr
Range	0-500	0-200	0-200	0-2000	0-20	0-25	0-100
08/29/2013 14:06	76	0	17	17	8.9	10.7	80.0
08/29/2013 14:07	122	0	15	15	9.6	10.0	80.0
08/29/2013 14:08	83	1	11	11	8.3	11.4	82.0
08/29/2013 14:09	81	1	10	10	9.8	9.8	82.0
08/29/2013 14:10	79	1	9	9	9.5	10.2	82.0
08/29/2013 14:11	71	1	8	8	9.4	10.2	82.0
08/29/2013 14:12	80	1	7	7	9.3	10.4	81.0
08/29/2013 14:13	76	1	7	7	8.8	11.0	80.0
08/29/2013 14:14	80	1	9	9	8.9	10.7	79.0
08/29/2013 14:15	96	1	9	9	9.3	10.4	79.0
08/29/2013 14:16	89	0	10	10	9.6	10.0	80.0
08/29/2013 14:17	87	0	10	10	9.7	9.9	80.0
08/29/2013 14:18	107	1	9	9	9.9	9.7	81.0
08/29/2013 14:19	111	1	9	9	9.8	9.9	81.0
08/29/2013 14:20	84	1	7	7	9.2	10.4	81.0
08/29/2013 14:21	92	1	9	9	9.3	10.3	81.0
08/29/2013 14:22	101	1	9	9	9.2	10.4	81.0
08/29/2013 14:23	90	1	9	9	9.6	10.0	81.0
08/29/2013 14:24	75	1	8	8	9.3	10.3	81.0
08/29/2013 14:25	79	0	10	10	9.3	10.3	81.0
08/29/2013 14:26	81	0	10	10	9.4	10.3	81.0
08/29/2013 14:27	79	0	9	9	9.1	10.6	81.0
08/29/2013 14:28	75	0	8	8	9.0	10.7	81.0
08/29/2013 14:29	74	1	11	11	9.2	10.5	81.0
Raw Average =	86	0	9.5	9.5	9.3	10.3	80.7
O2 Corrected Avg. =	113	0	12	12			
Lbs./Hour Avg. =	27.60	0.29	1.86				
Period % Recovery =	100.0	100.0	100.0	100.0	100.0	100.0	100.0

Date/Time Printed: 08/29/2013 14:34

APPENDIX D

Reference Method Field Data

Flow Rate, Moisture

ISOKINETIC SAMPLING TRAIN RESULTS - METHOD M316

Client Name	Covanta Energy Group, Inc.	**Operator**	EMK
Plant Name	Huntington Resource Recovery Facility	**Project #**	13022
Sampling Location	Unit 1 FF Outlet	**Standard Temperature, °F**	68

USE IN AVERAGE OF RUN SET? 1 or 0 =>		1	1	1		SET AVERAGE
Run Number		1-O-M316-1	1-O-M316-2	1-O-M316-3		
Run Date		08/27/13	08/27/13	08/27/13		
Run Start Time	hh:mm	904	1220	1518		
Run Stop Time	hh:mm	1015	1329	1624		
Sampling Parameters						
Meter Calibration Factor	Y	0.9839	0.9955	0.9955		
Y_{QA} Calculated by Test Run	Y_{QA}	0.9676	1.0075	0.9990		
Y_{QA} PASS/FAIL by Test Run	Check	PASS	PASS	PASS		PASS
Pitot Tube Coefficient	C_p	0.84	0.84	0.84		
Stack/Duct Static Pressure	in H_2O	-16.00	-16.00	-16.00		-16.00
Stack Cross-Sectional Area	ft^2	21.648	21.648	21.648		21.648
Barometric Pressure	in Hg	29.7	29.7	29.7		29.7
Actual Nozzle Diameter	in	0.211	0.211	0.211		
Carbon Dioxide Percentage	% CO_2	8.3	8.8	8.2		8.4
Oxygen Percentage	% O_2	11.5	10.9	11.5		11.3
Carbon Monoxide Percentage	% CO	0.0	0.0	0.0		0.0
Nitrogen Percentage	% N_2	80.2	80.3	80.3		80.3
Total Water Volume Collected	mL	162.3	186.8	184.3		177.8
Sample Volume	ft^3	36.210	36.835	35.050		36.032
Average Meter Temperature	°F	70	82	86		79
Average Stack Temperature	°F	284	289	290		287
Average Delta H	in H_2O	1.08	1.17	1.03		1.09
Total Sampling Time	min	60	60	60		60
Air Flow Parameters						
Volume of Water vapor @ STP	SCF	7.639	8.793	8.675		8.369
Volume Metered @ STP	DSCF	35.286	35.521	33.590		34.799
Absolute Stack/Duct Pressure	in Hg	28.5	28.5	28.5		28.5
Absolute Meter Pressure	in Hg	29.8	29.8	29.8		29.8
Calculated Stack Moisture	% H_20	17.8	19.8	20.5		19.4
Dry Mole Fraction	decimal	0.822	0.802	0.795		0.806
Avg Square of Differential Pressure	in H_2O	1.032	1.082	1.016		1.043
Avg Square of Diff. Pres., Squared	in H_2O	1.065	1.170	1.032		1.089
Dry Gas Molecular Weight	lb/lb-mole	29.79	29.84	29.77		29.80
Wet Stack Gas Molecular Weight	lb/lb-mole	27.69	27.49	27.36		27.51
Average Stack Gas Velocity	ft/sec	71.91	75.91	71.52		73.11
Percent of Isokinetic Rate	% ISO	100.9	99.4	100.8		100.4
Air Flow Rate Results						
Actual Stack Flow/Minute	ACFM	93,399	98,595	92,892		94,962
Dry Standard Stack Flow/Minute	DSCFM	51,967	53,127	49,556		51,550
Dry Standard Flow/Minute @ 7% O2	DSCFM7	35,143	38,221	33,513		35,626

ISOKINETIC SAMPLING TRAIN RESULTS - METHOD M8

Client Name	Covanta Energy Group, Inc.	**Operator**	EMK
Plant Name	Huntington Resource Recovery Facility	**Project #**	13022
Sampling Location	Unit 1 FF Outlet	**Standard Temperature, °F**	68

USE IN AVERAGE OF RUN SET? 1 or 0 =>		1	1	1		SET AVERAGE
Run Number		1-O-M8-1	1-O-M8-2	1-O-M8-3		
Run Date		08/27/13	08/27/13	08/27/13		
Run Start Time	hh:mm	1048	1348	1704		
Run Stop Time	hh:mm	1156	1454	1809		
Sampling Parameters						
Meter Calibration Factor	Y	0.9955	0.9839	0.9839		
Y_{QA} Calculated by Test Run	Y_{QA}	0.9655	0.9524	0.9496		
Y_{QA} PASS/FAIL by Test Run	Check	PASS	PASS	PASS		PASS
Pitot Tube Coefficient	C_p	0.84	0.84	0.84		
Stack/Duct Static Pressure	in H_2O	-16.00	-16.00	-16.00		-16.00
Stack Cross-Sectional Area	ft^2	21.648	21.648	21.648		21.648
Barometric Pressure	in Hg	29.7	29.7	29.7		29.7
Actual Nozzle Diameter	in	0.211	0.211	0.211		
Carbon Dioxide Percentage	% CO_2	8.1	8.6	9.0		8.6
Oxygen Percentage	% O_2	11.6	11.2	10.8		11.2
Carbon Monoxide Percentage	% CO	0.0	0.0	0.0		0.0
Nitrogen Percentage	% N_2	80.3	80.2	80.2		80.2
Total Water Volume Collected	mL	184.0	183.9	191.2		186.4
Sample Volume	ft^3	37.825	38.620	38.770		38.405
Average Meter Temperature	°F	76	84	85		82
Average Stack Temperature	°F	287	288	289		288
Average Delta H	in H_2O	1.14	1.16	1.17		1.15
Total Sampling Time	min	60	60	60		60
Air Flow Parameters						
Volume of Water vapor @ STP	SCF	8.661	8.656	9.000		8.772
Volume Metered @ STP	DSCF	36.896	36.669	36.785		36.783
Absolute Stack/Duct Pressure	in Hg	28.5	28.5	28.5		28.5
Absolute Meter Pressure	in Hg	29.8	29.8	29.8		29.8
Calculated Stack Moisture	% H_20	19.0	19.1	19.7		19.3
Dry Mole Fraction	decimal	0.810	0.809	0.803		0.807
Avg Square of Differential Pressure	in H_2O	1.069	1.070	1.070		1.070
Avg Square of Diff. Pres., Squared	in H_2O	1.143	1.145	1.145		1.144
Dry Gas Molecular Weight	lb/lb-mole	29.76	29.82	29.87		29.82
Wet Stack Gas Molecular Weight	lb/lb-mole	27.52	27.57	27.54		27.54
Average Stack Gas Velocity	ft/sec	74.88	74.92	75.05		74.95
Percent of Isokinetic Rate	% ISO	103.3	102.8	103.9		103.4
Air Flow Rate Results						
Actual Stack Flow/Minute	ACFM	97,261	97,310	97,482		97,351
Dry Standard Stack Flow/Minute	DSCFM	53,090	53,007	52,623		52,907
Dry Standard Flow/Minute @ 7% O2	DSCFM7	35,521	36,991	38,237		36,916

ISOKINETIC SAMPLING TRAIN RESULTS - METHOD M316

Client Name	Covanta Energy Group, Inc.	**Operator**	EMK
Plant Name	Huntington Resource Recovery Facility	**Project #**	13022
Sampling Location	Unit 2 FF Outlet	**Standard Temperature, °F**	68

USE IN AVERAGE OF RUN SET? 1 or 0 =>		1	1	1		**SET AVERAGE**
Run Number		2-O-M316-1	2-O-M316-2	2-O-M316-3		
Run Date		08/28/13	08/28/13	08/28/13		
Run Start Time	hh:mm	947	1358	1718		
Run Stop Time	hh:mm	1052	1539	1822		
Sampling Parameters						
Meter Calibration Factor	Y	0.9754	0.9754	0.9754		
Y_{QA} Calculated by Test Run	Y_{QA}	0.9505	0.9343	0.9399		
Y_{QA} PASS/FAIL by Test Run	Check	PASS	PASS	PASS		PASS
Pitot Tube Coefficient	C_p	0.84	0.84	0.84		
Stack/Duct Static Pressure	in H_2O	-15.00	-15.00	-15.00		-15.00
Stack Cross-Sectional Area	ft^2	21.648	21.648	21.648		21.648
Barometric Pressure	in Hg	29.7	29.7	29.7		29.7
Actual Nozzle Diameter	in	0.211	0.211	0.211		
Carbon Dioxide Percentage	% CO_2	9.5	9.2	9.5		9.4
Oxygen Percentage	% O_2	10.1	10.4	10.1		10.2
Carbon Monoxide Percentage	% CO	0.0	0.0	0.0		0.0
Nitrogen Percentage	% N_2	80.4	80.4	80.4		80.4
Total Water Volume Collected	mL	173.0	141.6	157.0		157.2
Sample Volume	ft^3	37.855	35.060	35.810		36.242
Average Meter Temperature	°F	90	90	87		89
Average Stack Temperature	°F	278	278	277		278
Average Delta H	in H_2O	1.10	0.91	0.97		0.99
Total Sampling Time	min	60	60	60		60
Air Flow Parameters						
Volume of Water vapor @ STP	SCF	8.143	6.665	7.390		7.399
Volume Metered @ STP	DSCF	35.250	32.668	33.513		33.810
Absolute Stack/Duct Pressure	in Hg	28.6	28.6	28.6		28.6
Absolute Meter Pressure	in Hg	29.8	29.8	29.8		29.8
Calculated Stack Moisture	% H_20	18.8	16.9	18.1		17.9
Dry Mole Fraction	decimal	0.812	0.831	0.819		0.821
Avg Square of Differential Pressure	in H_2O	1.040	0.946	0.974		0.987
Avg Square of Diff. Pres., Squared	in H_2O	1.082	0.895	0.949		0.975
Dry Gas Molecular Weight	lb/lb-mole	29.92	29.89	29.92		29.91
Wet Stack Gas Molecular Weight	lb/lb-mole	27.69	27.87	27.77		27.78
Average Stack Gas Velocity	ft/sec	72.14	65.36	67.39		68.29
Percent of Isokinetic Rate	% ISO	100.7	100.7	101.4		101.0
Air Flow Rate Results						
Actual Stack Flow/Minute	ACFM	93,696	84,890	87,534		88,707
Dry Standard Stack Flow/Minute	DSCFM	52,023	48,212	49,109		49,782
Dry Standard Flow/Minute @ 7% O2	DSCFM7	40,421	36,419	38,157		38,332

ISOKINETIC SAMPLING TRAIN RESULTS - METHOD M8

Client Name	Covanta Energy Group, Inc.	**Operator**	EMK
Plant Name	Huntington Resource Recovery Facility	**Project #**	13022
Sampling Location	Unit 2 FF Outlet	**Standard Temperature, °F**	68

USE IN AVERAGE OF RUN SET? 1 or 0 =>		1	1	1		SET AVERAGE
Run Number		2-O-M8-1	2-O-M8-2	2-O-M8-3		
Run Date		08/28/13	08/28/13	08/28/13		
Run Start Time	hh:mm	1109	1232	1559		
Run Stop Time	hh:mm	1214	1336	1703		
Sampling Parameters						
Meter Calibration Factor	Y	0.9754	0.9754	0.9754		
Y_{QA} Calculated by Test Run	Y_{QA}	0.9503	0.9384	0.9370		
Y_{QA} PASS/FAIL by Test Run	Check	PASS	PASS	PASS		PASS
Pitot Tube Coefficient	C_p	0.84	0.84	0.84		
Stack/Duct Static Pressure	in H_2O	-15.00	-15.00	-15.00		-15.00
Stack Cross-Sectional Area	ft^2	21.648	21.648	21.648		21.648
Barometric Pressure	in Hg	29.7	29.7	29.7		29.7
Actual Nozzle Diameter	in	0.211	0.214	0.214		
Carbon Dioxide Percentage	% CO_2	9.6	9.1	9.5		9.4
Oxygen Percentage	% O_2	10.0	10.5	10.1		10.2
Carbon Monoxide Percentage	% CO	0.0	0.0	0.0		0.0
Nitrogen Percentage	% N_2	80.4	80.4	80.4		80.4
Total Water Volume Collected	mL	162.6	174.7	153.4		163.6
Sample Volume	ft^3	36.010	39.560	36.985		37.518
Average Meter Temperature	°F	92	91	87		90
Average Stack Temperature	°F	278	278	278		278
Average Delta H	in H_2O	0.99	1.17	1.02		1.06
Total Sampling Time	min	60	60	60		60
Air Flow Parameters						
Volume of Water vapor @ STP	SCF	7.654	8.223	7.221		7.699
Volume Metered @ STP	DSCF	33.394	36.808	34.621		34.941
Absolute Stack/Duct Pressure	in Hg	28.6	28.6	28.6		28.6
Absolute Meter Pressure	in Hg	29.8	29.8	29.8		29.8
Calculated Stack Moisture	% H_2O	18.6	18.3	17.3		18.1
Dry Mole Fraction	decimal	0.814	0.817	0.827		0.819
Avg Square of Differential Pressure	in H_2O	0.987	1.043	0.977		1.002
Avg Square of Diff. Pres., Squared	in H_2O	0.974	1.087	0.954		1.005
Dry Gas Molecular Weight	lb/lb-mole	29.94	29.88	29.92		29.91
Wet Stack Gas Molecular Weight	lb/lb-mole	27.71	27.71	27.87		27.76
Average Stack Gas Velocity	ft/sec	68.42	72.28	67.49		69.40
Percent of Isokinetic Rate	% ISO	100.5	101.4	100.8		100.9
Air Flow Rate Results						
Actual Stack Flow/Minute	ACFM	88,867	93,879	87,667		90,138
Dry Standard Stack Flow/Minute	DSCFM	49,413	52,458	49,628		50,500
Dry Standard Flow/Minute @ 7% O2	DSCFM7	38,748	39,249	38,560		38,852

ISOKINETIC SAMPLING TRAIN RESULTS - METHOD M316

Client Name	Covanta Energy Group, Inc.	**Operator**	EMK
Plant Name	Huntington Resource Recovery Facility	**Project #**	13022
Sampling Location	Unit 3 FF Outlet	**Standard Temperature, °F**	68

USE IN AVERAGE OF RUN SET? 1 or 0 =>		1	1	1		SET AVERAGE
Run Number		3-O-M316-1	3-O-M316-2	3-O-M316-3		
Run Date		08/29/13	08/29/13	08/29/13		
Run Start Time	hh:mm	928	1154	1416		
Run Stop Time	hh:mm	1032	1258	1519		
Sampling Parameters						
Meter Calibration Factor	Y	1.0150	1.0150	1.0150		
Y_{QA} Calculated by Test Run	Y_{QA}	1.0055	1.0104	1.0009		
Y_{QA} PASS/FAIL by Test Run	Check	PASS	PASS	PASS		PASS
Pitot Tube Coefficient	C_p	0.84	0.84	0.84		
Stack/Duct Static Pressure	in H_2O	-16.00	-16.00	-16.00		-16.00
Stack Cross-Sectional Area	ft^2	21.648	21.648	21.648		21.648
Barometric Pressure	in Hg	29.9	29.9	29.9		29.9
Actual Nozzle Diameter	in	0.211	0.211	0.211		
Carbon Dioxide Percentage	% CO_2	8.7	8.8	8.7		8.7
Oxygen Percentage	% O_2	11.0	10.9	11.1		11.0
Carbon Monoxide Percentage	% CO	0.0	0.0	0.0		0.0
Nitrogen Percentage	% N_2	80.3	80.3	80.2		80.3
Total Water Volume Collected	mL	150.7	166.7	157.3		158.2
Sample Volume	ft^3	33.300	33.780	33.175		33.418
Average Meter Temperature	°F	74	77	79		77
Average Stack Temperature	°F	294	294	294		294
Average Delta H	in H_2O	1.03	1.06	1.00		1.03
Total Sampling Time	min	60	60	60		60
Air Flow Parameters						
Volume of Water vapor @ STP	SCF	7.093	7.847	7.404		7.448
Volume Metered @ STP	DSCF	33.478	33.773	33.021		33.424
Absolute Stack/Duct Pressure	in Hg	28.7	28.7	28.7		28.7
Absolute Meter Pressure	in Hg	30.0	30.0	30.0		30.0
Calculated Stack Moisture	% H_20	17.5	18.9	18.3		18.2
Dry Mole Fraction	decimal	0.825	0.811	0.817		0.818
Avg Square of Differential Pressure	in H_2O	0.986	1.003	0.973		0.987
Avg Square of Diff. Pres., Squared	in H_2O	0.973	1.005	0.947		0.975
Dry Gas Molecular Weight	lb/lb-mole	29.83	29.84	29.84		29.84
Wet Stack Gas Molecular Weight	lb/lb-mole	27.76	27.61	27.67		27.68
Average Stack Gas Velocity	ft/sec	68.88	70.23	68.06		69.06
Percent of Isokinetic Rate	% ISO	100.3	100.9	101.1		100.8
Air Flow Rate Results						
Actual Stack Flow/Minute	ACFM	89,465	91,217	88,401		89,695
Dry Standard Stack Flow/Minute	DSCFM	49,626	49,736	48,555		49,306
Dry Standard Flow/Minute @ 7% O2	DSCFM7	35,345	35,781	34,233		35,120

ISOKINETIC SAMPLING TRAIN RESULTS - METHOD M8

Client Name	Covanta Energy Group, Inc.	**Operator**	EMK
Plant Name	Huntington Resource Recovery Facility	**Project #**	13022
Sampling Location	Unit 3 FF Outlet	**Standard Temperature, °F**	68

USE IN AVERAGE OF RUN SET? 1 or 0 =>		1	1	1		SET AVERAGE
Run Number		3-O-M8-1	3-O-M8-2	3-O-M8-3		
Run Date		08/29/13	08/29/13	08/29/13		
Run Start Time	hh:mm	815	1042	1307		
Run Stop Time	hh:mm	922	1147	1412		
Sampling Parameters						
Meter Calibration Factor	Y	1.0077	1.0077	1.0077		
Y_{QA} Calculated by Test Run	Y_{QA}	0.9874	0.9935	0.9879		
Y_{QA} PASS/FAIL by Test Run	Check	PASS	PASS	PASS		PASS
Pitot Tube Coefficient	C_p	0.84	0.84	0.84		
Stack/Duct Static Pressure	in H_2O	-16.00	-16.00	-16.00		-16.00
Stack Cross-Sectional Area	ft^2	21.648	21.648	21.648		21.648
Barometric Pressure	in Hg	29.9	29.9	29.9		29.9
Actual Nozzle Diameter	in	0.214	0.210	0.210		
Carbon Dioxide Percentage	% CO_2	8.6	8.7	8.9		8.7
Oxygen Percentage	% O_2	11.1	11.1	10.9		11.0
Carbon Monoxide Percentage	% CO	0.0	0.0	0.0		0.0
Nitrogen Percentage	% N_2	80.3	80.2	80.2		80.2
Total Water Volume Collected	mL	200.7	142.8	173.2		172.2
Sample Volume	ft^3	34.840	33.660	33.710		34.070
Average Meter Temperature	°F	73	77	79		76
Average Stack Temperature	°F	293	293	293		293
Average Delta H	in H_2O	0.98	0.92	0.91		0.93
Total Sampling Time	min	60	60	60		60
Air Flow Parameters						
Volume of Water vapor @ STP	SCF	9.447	6.722	8.153		8.107
Volume Metered @ STP	DSCF	34.854	33.386	33.307		33.849
Absolute Stack/Duct Pressure	in Hg	28.7	28.7	28.7		28.7
Absolute Meter Pressure	in Hg	30.0	30.0	30.0		30.0
Calculated Stack Moisture	% H_20	21.3	16.8	19.7		19.2
Dry Mole Fraction	decimal	0.787	0.832	0.803		0.808
Avg Square of Differential Pressure	in H_2O	0.986	0.991	0.986		0.988
Avg Square of Diff. Pres., Squared	in H_2O	0.972	0.983	0.971		0.975
Dry Gas Molecular Weight	lb/lb-mole	29.82	29.84	29.86		29.84
Wet Stack Gas Molecular Weight	lb/lb-mole	27.30	27.85	27.53		27.56
Average Stack Gas Velocity	ft/sec	69.38	69.06	69.08		69.17
Percent of Isokinetic Rate	% ISO	105.5	99.7	103.1		102.8
Air Flow Rate Results						
Actual Stack Flow/Minute	ACFM	90,118	89,694	89,724		89,845
Dry Standard Stack Flow/Minute	DSCFM	47,727	50,271	48,503		48,834
Dry Standard Flow/Minute @ 7% O2	DSCFM7	33,649	35,443	34,894		34,662

EPA Method 3 for Molecular Weight Determination

Client Name	Covanta Energy Group, Inc.	**Project #**	13022
Plant Name	Huntington Resource Recovery Facility	**Fuel Type**	MSW
Plant City, State	East Northport, NY	**Fo Min**	
Test Location	Unit 1 FF Outlet	**Fo Max**	

Date	8/27/13	**Run Number**	1-O-M316-1		**ORSAT ID**	2	**Leak Ck?**
Shared With			**Start Time**	0904	**Stop Time**	1015	Y
Sample Analysis Time	**Carbon Dioxide Concentra.**	**Oxygen Concentra.**	**Oxygen Concentra. by difference**	**CO & Nitrogen Concentra.**	**Carbon Dioxide Difference**	**Oxygen Difference**	**Operator** DGB **Bag #**
	($\%CO_2$)	reading	($\%O_2$)	($\%CO+N_2$)	(M_d)	(ΔM_d)	OB8
hh:mm	reading	reading	reading	percent	lb/lb-mole	lb/lb-mole	**Fyrite #s**
1103	8.3	19.8	11.5	80.2	0.1	0.0	
1107	8.2	19.7	11.5	80.3	0.1	0.0	**Fo**
1114	8.3	19.8	11.5	80.2	0.0	0.0	
Averages	8.3		11.5	80.2	OK	OK	

Date	8/27/13	**Run Number**	1-O-M316-2		**ORSAT ID**	2	**Leak Ck?**
Shared With			**Start Time**	1220	**Stop Time**	1329	Y
Sample Analysis Time	**Carbon Dioxide Concentra.**	**Oxygen Concentra.**	**Oxygen Concentra. by difference**	**CO & Nitrogen Concentra.**	**Carbon Dioxide Difference**	**Oxygen Difference**	**Operator** DGB **Bag #**
	($\%CO_2$)	reading	($\%O_2$)	($\%CO+N_2$)	(M_d)	(ΔM_d)	OB8
hh:mm	reading	reading	reading	percent	lb/lb-mole	lb/lb-mole	**Fyrite #s**
1355	8.8	19.8	11.0	80.2	0.0	0.1	
1402	8.8	19.7	10.9	80.3	0.1	0.0	**Fo**
1409	8.9	19.8	10.9	80.2	0.1	0.1	
Averages	8.8		10.9	80.3	OK	OK	

Date	8/27/13	**Run Number**	1-O-M316-3		**ORSAT ID**	2	**Leak Ck?**
Shared With			**Start Time**	1518	**Stop Time**	1624	Y
Sample Analysis Time	**Carbon Dioxide Concentra.**	**Oxygen Concentra.**	**Oxygen Concentra. by difference**	**CO & Nitrogen Concentra.**	**Carbon Dioxide Difference**	**Oxygen Difference**	**Operator** DGB **Bag #**
	($\%CO_2$)	reading	($\%O_2$)	($\%CO+N_2$)	(M_d)	(ΔM_d)	OB5
hh:mm	reading	reading	reading	percent	lb/lb-mole	lb/lb-mole	**Fyrite #s**
1643	8.2	19.7	11.5	80.3	0.1	0.0	
1650	8.3	19.8	11.5	80.2	0.1	0.0	**Fo**
1657	8.2	19.7	11.5	80.3	0.0	0.0	
Averages	8.2		11.5	80.3	OK	OK	

Date	8/27/13	**Run Number**			**ORSAT ID**	2	**Leak Ck?**
Shared With			**Start Time**		**Stop Time**		Y
Sample Analysis Time	**Carbon Dioxide Concentra.**	**Oxygen Concentra.**	**Oxygen Concentra. by difference**	**CO & Nitrogen Concentra.**	**Carbon Dioxide Difference**	**Oxygen Difference**	**Operator** DGB **Bag #**
	($\%CO_2$)	reading	($\%O_2$)	($\%CO+N_2$)	(M_d)	(ΔM_d)	
hh:mm	reading	reading	reading	percent	lb/lb-mole	lb/lb-mole	**Fyrite #s**
			0.0	100.0			
			0.0	100.0			**Fo**
			0.0	100.0			
Averages	#DIV/0!		0.0	#DIV/0!			

Signature:	David G. Bittle	**Checked by:**	

EPA Method 4 for Percent Moisture Determination

Client Name	Covanta Energy Group, Inc.	**Project #**	13022
Plant Name	Huntington Resource Rec Fac	**Balance Type**	Electronic
Plant City, State	East Northport, NY	**Balance ID**	EB1
Sampling Location	Unit 1 FF Outlet	**Operator Name**	Blake Cone

Run Number	1-O-M316-1	1-O-M316-2	1-O-M316-3	
Test Date	8/27/13	8/27/13	8/27/13	
Reagent Box ID				

Impinger Reagent	DI	mL	mL	mL	mL
Final Catch Weight	grams	425.3	448.9	446.9	
Initial Tare Weight	grams	269.0	268.3	267.7	
Net Moisture Caught	grams	156.3	180.6	179.2	0.0

Impinger Reagent		mL	mL	mL	mL
Final Catch Weight	grams				
Initial Tare Weight	grams				
Net Moisture Caught	grams	0.0	0.0	0.0	0.0

Impinger Reagent		mL	mL	mL	mL
Final Catch Weight	grams				
KMNo4 Weight	grams				
KMnO4 g/mL	1.1				
Initial Jar Tare Weight	grams				
Net Moisture Caught	grams	0.0	0.0	0.0	0.0

Silica Gel	SG	grams	grams	grams	grams
Final Catch Weight	grams	263.7	269.9	275.0	
Initial Tare Weight	grams	257.7	263.7	269.9	
Net Moisture Caught	grams	6.0	6.2	5.1	0.0

Total Catch	grams	162.3	186.8	184.3	0.0

Signature:			**Checked By:**	

ISOKINETIC SAMPLING TRAIN DATASHEET - METHOD M316

Client Name	Covanta Energy Group, Inc.	Run #	1-O-M316-1		
Plant Name	Huntington Resource Recovery Facility	Project #	13022	Run Start	904
Plant City, State	East Northport, NY	Personnel	EMK	Run End	1015
Test Location	Unit 1 FF Outlet	Tester Signature			
Date of Test	8/27/13	Checked By	David H. Brill		

Isokinetic Factor Setup		Pressures		Sampling Equipment			Filter ID & Tares		Actuals
ΔH @ 0.75 SCFM	1.733	Pbar	29.7	Meter Console #		T3			CO_2
Meter Calibration Factor	0.9839	Pstatic	-16.00	Ideal Nozzle Diameter		0.245			8.3
Pitot Tube Coefficient	0.84	Tstd, °F	68	Nozzle #		GN477			O_2
Estimated DGM Temp	75	Pstd	29.92	Actual Nozzle Diameter		0.211	XAD ID & Tares		11.5
Estimated Stack Temp or M2 Avg.	285	Diluent Estimates		Probe Lgth/ID #	6'	158			CO
Estimated Delta P or M2 Avg.	1.00			Liner Material		BG	Y_{qa}		0.0
Estimated Moisture Content	19.0	CO_2	8.5	Filter Box #		HB1	0.9676		N_2
Estimated Dry Molecular Weight	29.80	O_2	11.0	Cold Box ID #		CB17	1.66%		80.2
Estimated Velocity, ft/sec	69.9	CO	0.0	Umbilical ID #		U50-9	PASS		H_2O
K Factor (delta H/delta P)	1.00	N_2	80.5	TC ID #s		158			162.3

Equipment Checks		PRE	POST	Leak Checks	1	2	3	4	5	6	Status
Tambient		71	72	DGM initial							0.000
Thermocouples		Y	Y	Vacuum	15	10					15
Pitots		Y	Y	Leak Rate	0.000	0.000					OK
Tedlar Bag	OB8	Y	Y	DGM final							0.000

Point #	Clock Time	Test Time	Dry Gas Meter Reading	Velocity Head	Desired Orifice ΔH	Actual Orifice ΔH	Pump Vac.	DGM Inlet Temp	DGM Outlet Temp	Stack Temp	Filter Temp	Imp. Exit Temp	Cond. Exit Temp
	24 hr	min	ft^3	in H_2O	in H_2O	in H_2O	in Hg	°F	°F	°F	°F	°F	°F
B - 12	904	0.0	915.950	1.30	1.31	1.31	6	67	65	282	259	59	NA
B - 11		2.5	917.535	1.25	1.26	1.26	6	67	65	283	263	46	NA
B - 10		5.0	919.090	1.20	1.21	1.21	6	69	66	283	266	46	NA
B - 9		7.5	920.675	1.20	1.21	1.21	6	70	66	283	266	47	NA
B - 8		10.0	922.210	1.40	1.41	1.41	6	71	66	284	266	47	NA
B - 7		12.5	923.880	1.25	1.26	1.26	6	71	67	285	266	48	NA
B - 6		15.0	925.440	1.15	1.15	1.15	6	72	68	286	266	50	NA
B - 5		17.5	927.010	0.92	0.92	0.92	6	72	68	276	265	50	NA
B - 4		20.0	928.490	0.89	0.89	0.89	5	73	68	276	265	48	NA
B - 3		22.5	929.895	0.87	0.87	0.87	5	73	69	276	268	48	NA
B - 2		25.0	931.290	0.88	0.88	0.88	5	73	69	276	267	49	NA
B - 1		27.5	932.650	0.97	0.97	0.97	5	73	68	276	250	49	NA
A - 12	934/	30.0	934.080	1.20	1.21	1.21	5	70	68	288	264	62	NA
A - 11	945	32.5	935.640	1.15	1.15	1.15	5	72	68	286	264	48	NA
A - 10		35.0	937.210	1.20	1.21	1.21	5	73	69	287	259	47	NA
A - 9		37.5	938.790	1.05	1.05	1.05	6	73	70	288	257	48	NA
A - 8		40.0	940.300	1.30	1.31	1.31	6	74	70	287	256	49	NA
A - 7		42.5	942.020	0.99	0.99	0.99	6	74	70	286	262	50	NA
A - 6		45.0	943.510	1.05	1.05	1.05	6	74	70	288	261	50	NA
A - 5		47.5	944.995	0.91	0.91	0.91	6	75	70	287	260	51	NA
A - 4		50.0	946.400	0.92	0.92	0.92	6	75	71	287	262	52	NA
A - 3		52.5	947.830	0.86	0.86	0.86	5	75	70	285	266	53	NA
A - 2		55.0	949.280	0.88	0.88	0.88	5	75	70	286	267	55	NA
A - 1		57.5	950.745	0.92	0.92	0.92	5	75	71	287	257	57	NA
-	1015	60.0	952.160										
-													
-													
-													
-													
-													
						MAX =>	6						
Average Values		60.0	36.210	1.065	1.08	1.08		70		284			

ISOKINETIC SAMPLING TRAIN DATASHEET - METHOD M316

Client Name	Covanta Energy Group, Inc.	Run #	1-O-M316-2		
Plant Name	Huntington Resource Recovery Facility	Project #	13022	Run Start	1220
Plant City, State	East Northport, NY	Personnel	EMK	Run End	1329
Test Location	Unit 1 FF Outlet	Tester Signature			
Date of Test	8/27/13	Checked By			

Isokinetic Factor Setup		Pressures		Sampling Equipment		Filter ID & Tares		Actuals
ΔH @ 0.75 SCFM	1.705	Pbar	29.7	Meter Console #	T1			CO_2
Meter Calibration Factor	0.9955	Pstatic	-16.00	Ideal Nozzle Diameter	0.245			8.8
Pitot Tube Coefficient	0.84	Tstd, °F	68	Nozzle #	GN477			O_2
Estimated DGM Temp	75	Pstd	29.92	Actual Nozzle Diameter	0.211	XAD ID & Tares		10.9
Estimated Stack Temp or M2 Avg.	285	Diluent Estimates		Probe Lgth/ID #	6' 158			CO
Estimated Delta P or M2 Avg.	1.00			Liner Material	BG	Y_{qa}		0.0
Estimated Moisture Content	19.0	CO_2	8.5	Filter Box #	HB5	1.0075		N_2
Estimated Dry Molecular Weight	29.80	O_2	11.0	Cold Box ID #	CB17	-1.20%		80.3
Estimated Velocity, ft/sec	69.9	CO	0.0	Umbilical ID #	U50-9	PASS		H_2O
K Factor (delta H/delta P)	0.99	N_2	80.5	TC ID #s	158			186.8

Equipment Checks		PRE	POST	Leak Checks	1	2	3	4	5	6	Status
Tambient		78	79	DGM initial							0.000
Thermocouples		Y	Y	Vacuum	15	10					15
Pitots		Y	Y	Leak Rate	0.000	0.000					OK
Tedlar Bag	OB8	Y	Y	DGM final							0.000

Point #	Clock Time	Test Time	Dry Gas Meter Reading	Velocity Head	Desired Orifice ΔH	Actual Orifice ΔH	Pump Vac.	DGM Inlet Temp	DGM Outlet Temp	Stack Temp	Filter Temp	Imp. Exit Temp	Cond. Exit Temp
	24 hr	min	ft^3	in H_2O	in H_2O	in H_2O	in Hg	°F	°F	°F	°F	°F	°F
B - 12	1220	0.0	625.465	1.60	1.58	1.58	6	78	78	291	266	62	NA
B - 11		2.5	627.250	1.60	1.58	1.58	6	80	78	292	265	60	NA
B - 10		5.0	628.940	1.55	1.53	1.53	6	81	79	292	263	60	NA
B - 9		7.5	630.720	1.60	1.58	1.58	6	82	79	292	266	60	NA
B - 8		10.0	632.510	1.50	1.48	1.48	6	82	79	293	265	57	NA
B - 7		12.5	634.300	1.55	1.53	1.53	6	83	79	295	265	55	NA
B - 6		15.0	636.100	1.20	1.19	1.19	5	84	80	281	262	55	NA
B - 5		17.5	637.610	1.05	1.04	1.04	5	84	80	281	265	57	NA
B - 4		20.0	639.110	1.00	0.99	0.99	5	84	80	280	265	57	NA
B - 3		22.5	640.550	0.93	0.92	0.92	5	85	80	285	264	59	NA
B - 2		25.0	641.920	0.89	0.88	0.88	5	85	80	281	266	59	NA
B - 1		27.5	643.265	0.97	0.96	0.96	5	85	80	285	263	59	NA
A - 12	1250/	30.0	644.640	1.30	1.28	1.28	5	82	81	281	255	63	NA
A - 11	1259	32.5	646.170	1.40	1.38	1.38	5	85	82	291	266	58	NA
A - 10		35.0	647.860	1.35	1.33	1.33	6	85	81	292	263	57	NA
A - 9		37.5	649.510	1.25	1.23	1.23	6	85	82	292	264	56	NA
A - 8		40.0	651.130	1.30	1.28	1.28	6	85	82	291	266	57	NA
A - 7		42.5	652.760	1.20	1.19	1.19	6	85	82	292	266	57	NA
A - 6		45.0	654.350	0.89	0.88	0.88	5	86	82	291	265	58	NA
A - 5		47.5	655.640	0.92	0.91	0.91	5	86	82	290	264	59	NA
A - 4		50.0	657.020	0.85	0.84	0.84	5	86	82	291	266	59	NA
A - 3		52.5	658.340	0.89	0.88	0.88	5	87	83	291	265	59	NA
A - 2		55.0	659.725	0.85	0.84	0.83	5	87	83	291	263	59	NA
A - 1		57.5	661.020	0.83	0.82	0.82	5	87	83	290	264	59	NA
-	1329	60.0	662.300										
-													
-													
-													
-													
-													
						MAX =>	6						
Average Values		60.0	36.835	1.170	1.17	1.17		82		289			

ISOKINETIC SAMPLING TRAIN DATASHEET - METHOD M316

Client Name	Covanta Energy Group, Inc.	Run #	1-O-M316-3		
Plant Name	Huntington Resource Recovery Facility	Project #	13022	Run Start	1518
Plant City, State	East Northport, NY	Personnel	EMK	Run End	1624
Test Location	Unit 1 FF Outlet	Tester Signature			
Date of Test	8/27/13	Checked By	David O. Brinth		

Isokinetic Factor Setup		Pressures		Sampling Equipment			Filter ID & Tares		Actuals
ΔH @ 0.75 SCFM	1.705	Pbar	29.7	Meter Console #		T1			CO_2
Meter Calibration Factor	0.9955	Pstatic	-16.00	Ideal Nozzle Diameter		0.245			8.2
Pitot Tube Coefficient	0.84	Tstd, °F	68	Nozzle #		GN477			O_2
Estimated DGM Temp	75	Pstd	29.92	Actual Nozzle Diameter		0.211	XAD ID & Tares		11.5
Estimated Stack Temp or M2 Avg.	285	Diluent Estimates		Probe Lgth/ID #	6'	158			CO
Estimated Delta P or M2 Avg.	1.00			Liner Material		BG	Y_{qa}		0.0
Estimated Moisture Content	19.0	CO_2	8.5	Filter Box #		HB5	0.9990		N_2
Estimated Dry Molecular Weight	29.80	O_2	11.0	Cold Box ID #		CB17	-0.35%		80.3
Estimated Velocity, ft/sec	69.9	CO	0.0	Umbilical ID #		U50-9	PASS		H_2O
K Factor (delta H/delta P)	0.99	N_2	80.5	TC ID #s		158			184.3

Equipment Checks		PRE	POST	Leak Checks	1	2	3	4	5	6	Status
Tambient		83	83	DGM initial							0.000
Thermocouples		Y	Y	Vacuum	15	10					15
Pitots		Y	Y	Leak Rate	0.000	0.000					OK
Tedlar Bag	OB5	Y	Y	DGM final							0.000

Point #	Clock Time	Test Time	Dry Gas Meter Reading	Velocity Head	Desired Orifice ΔH	Actual Orifice ΔH	Pump Vac.	DGM Inlet Temp	DGM Outlet Temp	Stack Temp	Filter Temp	Imp. Exit Temp	Cond. Exit Temp
	24 hr	min	ft^3	in H_2O	in H_2O	in H_2O	in Hg	°F	°F	°F	°F	°F	°F
B - 12	1518	0.0	662.540	1.50	1.48	1.48	5	83	83	291	265	64	NA
B - 11		2.5	664.230	1.55	1.53	1.53	5	84	83	290	264	57	NA
B - 10		5.0	665.985	1.40	1.38	1.38	5	84	83	292	263	56	NA
B - 9		7.5	667.640	1.25	1.23	1.23	5	86	83	290	266	56	NA
B - 8		10.0	669.350	1.15	1.14	1.14	5	86	83	291	264	55	NA
B - 7		12.5	670.960	0.93	0.92	0.92	5	86	83	292	264	56	NA
B - 6		15.0	672.350	0.92	0.91	0.91	5	87	84	291	264	57	NA
B - 5		17.5	673.700	0.80	0.79	0.79	5	88	84	290	263	57	NA
B - 4		20.0	674.910	0.79	0.78	0.78	5	88	84	290	267	58	NA
B - 3		22.5	676.240	0.80	0.79	0.79	5	88	86	290	267	58	NA
B - 2		25.0	677.490	0.81	0.80	0.80	5	88	85	290	267	58	NA
B - 1		27.5	678.810	0.79	0.78	0.78	5	88	85	284	265	58	NA
A - 12	1548/	30.0	680.075	1.30	1.28	1.28	5	85	85	287	266	67	NA
A - 11	1554	32.5	681.660	1.30	1.28	1.28	5	87	84	290	267	57	NA
A - 10		35.0	683.290	1.20	1.19	1.19	6	87	84	291	265	55	NA
A - 9		37.5	684.940	1.10	1.09	1.09	6	88	85	290	266	55	NA
A - 8		40.0	686.590	1.15	1.14	1.14	5	88	85	291	266	56	NA
A - 7		42.5	688.130	0.93	0.92	0.92	5	88	85	290	265	57	NA
A - 6		45.0	689.470	0.92	0.91	0.91	5	88	85	290	265	57	NA
A - 5		47.5	690.760	0.88	0.87	0.87	5	88	85	289	265	58	NA
A - 4		50.0	692.145	0.90	0.89	0.89	5	88	85	290	266	58	NA
A - 3		52.5	693.525	0.88	0.87	0.87	5	87	85	287	265	59	NA
A - 2		55.0	694.940	0.89	0.88	0.88	5	87	85	290	265	60	NA
A - 1		57.5	696.220	0.92	0.91	0.91	5	88	85	291	266	60	NA
-	1624	60.0	697.590										
-													
-													
-													
-													
-													
						MAX =>	6						
Average Values		60.0	35.050	1.032	1.03	1.03		86		290			

EPA Method 3 for Molecular Weight Determination

Client Name	Covanta Energy Group, Inc.	**Project #**	13022
Plant Name	Huntington Resource Recovery Facility	**Fuel Type**	MSW
Plant City, State	East Northport, NY	**Fo Min**	
Test Location	Unit 1 FF Outlet	**Fo Max**	

Date	8/27/13	**Run Number**	1-O-M8-1		**ORSAT ID**	2	**Leak Ck?**
Shared With			**Start Time**	1048	**Stop Time**	1156	Y
Sample Analysis Time	**Carbon Dioxide Concentra.**	**Oxygen Concentra.**	**Oxygen Concentra. by difference**	**CO & Nitrogen Concentra.**	**Carbon Dioxide Difference**	**Oxygen Difference**	**Operator** DGB **Bag #**
	($\%CO_2$)	reading	($\%O_2$)	($\%CO+N_2$)	(M_d)	(ΔM_d)	OB5
hh:mm	reading	reading	reading	percent	lb/lb-mole	lb/lb-mole	**Fyrite #s**
1234	8.1	19.7	11.6	80.3	0.1	0.0	
1241	8.2	19.8	11.6	80.2	0.1	0.0	**Fo**
1248	8.1	19.7	11.6	80.3	0.0	0.0	
Averages	8.1		11.6	80.3	OK	OK	

Date	8/27/13	**Run Number**	1-O-M8-2		**ORSAT ID**	2	**Leak Ck?**
Shared With			**Start Time**	1348	**Stop Time**	1454	Y
Sample Analysis Time	**Carbon Dioxide Concentra.**	**Oxygen Concentra.**	**Oxygen Concentra. by difference**	**CO & Nitrogen Concentra.**	**Carbon Dioxide Difference**	**Oxygen Difference**	**Operator** DGB **Bag #**
	($\%CO_2$)	reading	($\%O_2$)	($\%CO+N_2$)	(M_d)	(ΔM_d)	OB6
hh:mm	reading	reading	reading	percent	lb/lb-mole	lb/lb-mole	**Fyrite #s**
1545	8.6	19.8	11.2	80.2	0.0	0.0	
1552	8.6	19.8	11.2	80.2	0.1	0.0	**Fo**
1559	8.5	19.7	11.2	80.3	0.1	0.0	
Averages	8.6		11.2	80.2	OK	OK	

Date	8/27/13	**Run Number**	1-O-M8-3		**ORSAT ID**	2	**Leak Ck?**
Shared With			**Start Time**	1704	**Stop Time**	1809	Y
Sample Analysis Time	**Carbon Dioxide Concentra.**	**Oxygen Concentra.**	**Oxygen Concentra. by difference**	**CO & Nitrogen Concentra.**	**Carbon Dioxide Difference**	**Oxygen Difference**	**Operator** DGB **Bag #**
	($\%CO_2$)	reading	($\%O_2$)	($\%CO+N_2$)	(M_d)	(ΔM_d)	OB9
hh:mm	reading	reading	reading	percent	lb/lb-mole	lb/lb-mole	**Fyrite #s**
1834	8.9	19.7	10.8	80.3	0.1	0.0	
1841	9.0	19.8	10.8	80.2	0.0	0.0	**Fo**
1848	9.0	19.8	10.8	80.2	0.1	0.0	
Averages	9.0		10.8	80.2	OK	OK	

Date	8/27/13	**Run Number**			**ORSAT ID**	2	**Leak Ck?**
Shared With			**Start Time**		**Stop Time**		Y
Sample Analysis Time	**Carbon Dioxide Concentra.**	**Oxygen Concentra.**	**Oxygen Concentra. by difference**	**CO & Nitrogen Concentra.**	**Carbon Dioxide Difference**	**Oxygen Difference**	**Operator** DGB **Bag #**
	($\%CO_2$)	reading	($\%O_2$)	($\%CO+N_2$)	(M_d)	(ΔM_d)	
hh:mm	reading	reading	reading	percent	lb/lb-mole	lb/lb-mole	**Fyrite #s**
			0.0	100.0			
			0.0	100.0			**Fo**
			0.0	100.0			
Averages	#DIV/0!		0.0	#DIV/0!			

Signature:	David H. Brith	**Checked by:**	

EPA Method 4 for Percent Moisture Determination

Client Name	Covanta Energy Group, Inc.	**Project #**	13022
Plant Name	Huntington Resource Rec Fac	**Balance Type**	Electronic
Plant City, State	East Northport, NY	**Balance ID**	EB1
Sampling Location	Unit 1 FF Outlet	**Operator Name**	Blake Cone

Run Number	1-O-M8-1	1-O-M8-2	1-O-M8-3	
Test Date	8/27/13	8/27/13	8/27/13	
Reagent Box ID				

Impinger Reagent	IPA	mL	mL	mL	mL
Final Catch Weight	grams	441.5	441.7	441.5	
Initial Tare Weight	grams	325.5	325.0	325.0	
Net Moisture Caught	grams	116.0	116.7	116.5	0.0

Impinger Reagent	H2O2	mL	mL	mL	mL
Final Catch Weight	grams	495.7	495.5	503.0	
Initial Tare Weight	grams	445.0	442.5	444.5	
Net Moisture Caught	grams	50.7	53.0	58.5	0.0

Impinger Reagent		mL	mL	mL	mL
Final Catch Weight	grams				
KMNo4 Weight	grams				
KMnO4 g/mL	1.1				
Initial Jar Tare Weight	grams				
Net Moisture Caught	grams	0.0	0.0	0.0	0.0

Silica Gel	SG	grams	grams	grams	grams
Final Catch Weight	grams	260.6	274.8	270.6	
Initial Tare Weight	grams	243.3	260.6	254.4	
Net Moisture Caught	grams	17.3	14.2	16.2	0.0

Total Catch	grams	184.0	183.9	191.2	0.0

Signature:			**Checked By:**	

ISOKINETIC SAMPLING TRAIN DATASHEET - METHOD M8

Client Name	Covanta Energy Group, Inc.	Run #	1-O-M8-1		
Plant Name	Huntington Resource Recovery Facility	Project #	13022	Run Start	1048
Plant City, State	East Northport, NY	Personnel	EMK	Run End	1156
Test Location	Unit 1 FF Outlet	Tester Signature			
Date of Test	8/27/13	Checked By			

Isokinetic Factor Setup		Pressures		Sampling Equipment		Filter ID & Tares		Actuals
ΔH @ 0.75 SCFM	1.705	Pbar	29.7	Meter Console #	T1			CO_2
Meter Calibration Factor	0.9955	Pstatic	-16.00	Ideal Nozzle Diameter	0.245			8.1
Pitot Tube Coefficient	0.84	Tstd, °F	68	Nozzle #	GN482			O_2
Estimated DGM Temp	75	Pstd	29.92	Actual Nozzle Diameter	0.211	XAD ID & Tares		11.6
Estimated Stack Temp or M2 Avg.	285	Diluent Estimates		Probe Lgth/ID # 6'	161			CO
Estimated Delta P or M2 Avg.	1.00			Liner Material	BG	Y_{qa}		0.0
Estimated Moisture Content	19.0	CO_2	8.5	Filter Box #	HB1	0.9655		N_2
Estimated Dry Molecular Weight	29.80	O_2	11.0	Cold Box ID #	CB9	3.01%		80.3
Estimated Velocity, ft/sec	69.9	CO	0.0	Umbilical ID #	U50-7	PASS		H_2O
K Factor (delta H/delta P)	0.99	N_2	80.5	TC ID #s	161			184.0

Equipment Checks		PRE	POST	Leak Checks	1	2	3	4	5	6	Status
Tambient		72	77	DGM initial							0.000
Thermocouples		Y	Y	Vacuum	15	10					15
Pitots		Y	Y	Leak Rate	0.000	0.000					OK
Tedlar Bag	OB5	Y	Y	DGM final							0.000

Point #	Clock Time	Test Time	Dry Gas Meter Reading	Velocity Head	Desired Orifice ΔH	Actual Orifice ΔH	Pump Vac.	DGM Inlet Temp	DGM Outlet Temp	Stack Temp	Filter Temp	Imp. Exit Temp	Cond. Exit Temp
	24 hr	min	ft^3	in H_2O	in H_2O	in H_2O	in Hg	°F	°F	°F	°F	°F	°F
B - 12	1048	0.0	952.410	1.40	1.38	1.38	7	74	72	284	256	62	NA
B - 11		2.5	954.050	1.35	1.33	1.33	7	74	72	288	256	55	NA
B - 10		5.0	955.700	1.40	1.38	1.38	8	75	73	289	255	54	NA
B - 9		7.5	957.330	1.30	1.28	1.28	8	75	73	288	256	54	NA
B - 8		10.0	959.010	1.30	1.28	1.28	8	76	72	288	262	55	NA
B - 7		12.5	960.660	1.20	1.19	1.19	8	77	73	288	267	56	NA
B - 6		15.0	962.310	1.15	1.14	1.14	8	77	73	288	263	55	NA
B - 5		17.5	963.950	1.15	1.14	1.14	8	77	73	288	265	55	NA
B - 4		20.0	965.560	0.92	0.91	0.91	8	78	74	284	265	55	NA
B - 3		22.5	966.960	0.89	0.88	0.88	7	78	74	283	266	55	NA
B - 2		25.0	968.420	0.88	0.87	0.87	7	78	74	286	266	56	NA
B - 1		27.5	969.780	0.96	0.95	0.95	7	79	74	284	258	57	NA
A - 12	1118/	30.0	971.220	1.60	1.58	1.58	8	76	74	286	266	65	NA
A - 11	1126	32.5	973.010	1.50	1.48	1.48	8	77	74	286	265	55	NA
A - 10		35.0	974.810	1.30	1.28	1.28	9	78	74	288	268	54	NA
A - 9		37.5	976.480	1.30	1.28	1.28	9	79	75	287	268	54	NA
A - 8		40.0	978.110	1.30	1.28	1.28	9	80	76	289	268	56	NA
A - 7		42.5	979.850	1.35	1.33	1.33	9	80	76	289	269	56	NA
A - 6		45.0	981.560	0.97	0.96	0.96	8	80	76	288	270	60	NA
A - 5		47.5	983.050	0.94	0.93	0.93	7	80	76	289	264	60	NA
A - 4		50.0	984.570	0.91	0.90	0.90	7	81	77	288	263	58	NA
A - 3		52.5	986.060	0.86	0.85	0.85	6	80	77	287	265	58	NA
A - 2		55.0	987.440	0.88	0.87	0.87	7	81	77	284	264	59	NA
A - 1		57.5	988.850	0.89	0.88	0.88	7	81	77	285	266	59	NA
-	1156	60.0	990.235										
-													
-													
-													
-													
-													
						MAX =>	9						
Average Values		60.0	37.825	1.143	1.14	1.14		76		287			

ISOKINETIC SAMPLING TRAIN DATASHEET - METHOD M8

Client Name	Covanta Energy Group, Inc.	Run #	1-O-M8-2		
Plant Name	Huntington Resource Recovery Facility	Project #	13022	Run Start	1348
Plant City, State	East Northport, NY	Personnel	EMK	Run End	1454
Test Location	Unit 1 FF Outlet	Tester Signature			
Date of Test	08/27/13	Checked By			

Isokinetic Factor Setup		Pressures		Sampling Equipment			Filter ID & Tares	Actuals
ΔH @ 0.75 SCFM	1.733	Pbar	29.7	Meter Console #		T3		CO_2
Meter Calibration Factor	0.9839	Pstatic	-16.00	Ideal Nozzle Diameter		0.245		8.6
Pitot Tube Coefficient	0.84	Tstd, °F	68	Nozzle #		GN482		O_2
Estimated DGM Temp	75	Pstd	29.92	Actual Nozzle Diameter		0.211	XAD ID & Tares	11.2
Estimated Stack Temp or M2 Avg.	285	Diluent		Probe Lgth/ID #	6'	161		CO
Estimated Delta P or M2 Avg.	1.00	Estimates		Liner Material		BG	Y_{qa}	0.0
Estimated Moisture Content	19.0	CO_2	8.5	Filter Box #		HB1	0.9524	N_2
Estimated Dry Molecular Weight	29.80	O_2	11.0	Cold Box ID #		CB9	3.20%	80.2
Estimated Velocity, ft/sec	69.9	CO	0.0	Umbilical ID #		U50-7	PASS	H_2O
K Factor (delta H/delta P)	1.00	N_2	80.5	TC ID #s		161		183.9

Equipment Checks		PRE	POST	Leak Checks	1	2	3	4	5	6	Status
Tambient		83	84	DGM initial							0.000
Thermocouples		Y	Y	Vacuum	15	10					15
Pitots		Y	Y	Leak Rate	0.000	0.000					OK
Tedlar Bag	OB6	Y	Y	DGM final							0.000

Point #	Clock Time	Test Time	Dry Gas Meter Reading	Velocity Head	Desired Orifice ΔH	Actual Orifice ΔH	Pump Vac.	DGM Inlet Temp	DGM Outlet Temp	Stack Temp	Filter Temp	Imp. Exit Temp	Cond. Exit Temp
	24 hr	min	ft^3	in H_2O	in H_2O	in H_2O	in Hg	°F	°F	°F	°F	°F	°F
A - 12	1348	0.0	0.450	1.60	1.61	1.61	7	80	79	288	262	64	NA
A - 11		2.5	2.330	1.45	1.46	1.46	7	82	79	288	262	65	NA
A - 10		5.0	4.000	1.55	1.56	1.56	7	82	79	283	263	64	NA
A - 9		7.5	5.840	1.50	1.51	1.51	8	84	80	284	263	63	NA
A - 8		10.0	7.620	1.20	1.21	1.21	8	85	80	288	260	64	NA
A - 7		12.5	9.350	1.20	1.21	1.21	7	85	80	288	264	64	NA
A - 6		15.0	10.960	1.10	1.10	1.10	7	85	81	288	261	64	NA
A - 5		17.5	12.570	1.00	1.00	1.00	7	86	81	288	266	61	NA
A - 4		20.0	14.060	0.98	0.98	0.98	7	86	81	282	265	62	NA
A - 3		22.5	15.610	0.96	0.96	0.96	7	86	81	288	266	61	NA
A - 2		25.0	17.040	0.97	0.97	0.97	7	87	81	288	267	63	NA
A - 1		27.5	18.510	0.96	0.96	0.96	7	88	81	288	267	59	NA
B - 12	1418/	30.0	20.000	1.40	1.41	1.40	7	86	82	287	261	66	NA
B - 11	1424	32.5	21.720	1.35	1.36	1.36	7	88	82	289	268	54	NA
B - 10		35.0	23.440	1.20	1.21	1.21	7	89	83	289	264	53	NA
B - 9		37.5	25.140	1.25	1.26	1.26	7	89	83	289	265	53	NA
B - 8		40.0	26.800	1.10	1.10	1.10	7	90	83	289	266	53	NA
B - 7		42.5	28.465	1.15	1.15	1.15	7	90	83	289	265	54	NA
B - 6		45.0	30.070	1.20	1.21	1.21	7	90	84	288	266	54	NA
B - 5		47.5	31.790	1.10	1.10	1.10	7	90	84	288	264	54	NA
B - 4		50.0	33.445	0.92	0.92	0.92	7	90	84	288	264	54	NA
B - 3		52.5	34.960	0.86	0.86	0.86	6	90	85	289	264	55	NA
B - 2		55.0	36.350	0.87	0.87	0.87	6	90	85	288	265	55	NA
B - 1		57.5	37.720	0.85	0.85	0.85	6	90	85	288	265	55	NA
-	1454	60.0	39.070										
-													
-													
-													
-													
-													
						MAX =>	8						
Average Values		60.0	38.620	1.145	1.16	1.16		84		288			

ISOKINETIC SAMPLING TRAIN DATASHEET - METHOD M8

Client Name	Covanta Energy Group, Inc.	Run #	1-O-M8-3		
Plant Name	Huntington Resource Recovery Facility	Project #	13022	Run Start	1704
Plant City, State	East Northport, NY	Personnel	EMK	Run End	1809
Test Location	Unit 1 FF Outlet	Tester Signature			
Date of Test	08/27/13	Checked By			

Isokinetic Factor Setup		Pressures		Sampling Equipment			Filter ID & Tares		Actuals
ΔH @ 0.75 SCFM	1.733	Pbar	29.7	Meter Console #		T3			CO_2
Meter Calibration Factor	0.9839	Pstatic	-16.00	Ideal Nozzle Diameter		0.245			9.0
Pitot Tube Coefficient	0.84	Tstd, °F	68	Nozzle #		GN482			O_2
Estimated DGM Temp	75	Pstd	29.92	Actual Nozzle Diameter		0.211	XAD ID & Tares		10.8
Estimated Stack Temp or M2 Avg.	285	Diluent		Probe Lgth/ID #	6'	161			CO
Estimated Delta P or M2 Avg.	1.00	Estimates		Liner Material		BG	Y_{qa}		0.0
Estimated Moisture Content	19.0	CO_2	8.5	Filter Box #		HB1	0.9496		N_2
Estimated Dry Molecular Weight	29.80	O_2	11.0	Cold Box ID #		CB9	3.48%		80.2
Estimated Velocity, ft/sec	69.9	CO	0.0	Umbilical ID #		U50-7	PASS		H_2O
K Factor (delta H/delta P)	1.00	N_2	80.5	TC ID #s		161			191.2

Equipment Checks		PRE	POST	Leak Checks	1	2	3	4	5	6	Status
Tambient		84	83	DGM initial							0.000
Thermocouples		Y	Y	Vacuum	15	10					15
Pitots		Y	Y	Leak Rate	0.000	0.002					OK
Tedlar Bag	OB9	Y	Y	DGM final							0.000

Point #	Clock Time	Test Time	Dry Gas Meter Reading	Velocity Head	Desired Orifice ΔH	Actual Orifice ΔH	Pump Vac.	DGM Inlet Temp	DGM Outlet Temp	Stack Temp	Filter Temp	Imp. Exit Temp	Cond. Exit Temp
	24 hr	min	ft^3	in H_2O	in H_2O	in H_2O	in Hg	°F	°F	°F	°F	°F	°F
A - 12	1704	0.0	52.040	1.45	1.46	1.46	8	83	82	289	266	65	NA
A - 11		2.5	53.810	1.50	1.51	1.51	8	84	82	290	264	63	NA
A - 10		5.0	55.590	1.50	1.51	1.51	8	85	82	290	263	61	NA
A - 9		7.5	57.320	1.40	1.41	1.41	8	85	82	290	262	61	NA
A - 8		10.0	59.070	1.35	1.36	1.36	8	85	82	289	262	61	NA
A - 7		12.5	60.830	1.40	1.41	1.41	8	87	82	290	266	60	NA
A - 6		15.0	62.620	1.20	1.21	1.21	8	87	83	289	263	59	NA
A - 5		17.5	64.330	1.10	1.10	1.10	8	87	83	291	265	60	NA
A - 4		20.0	66.010	1.15	1.15	1.15	8	87	83	289	265	60	NA
A - 3		22.5	67.700	0.94	0.94	0.94	7	87	83	290	263	59	NA
A - 2		25.0	69.220	0.87	0.87	0.87	7	87	83	289	262	59	NA
A - 1		27.5	70.710	0.87	0.87	0.87	7	88	83	289	263	60	NA
B - 12	1734/	30.0	72.075	1.40	1.41	1.40	7	85	83	285	265	66	NA
B - 11	1739	32.5	73.740	1.40	1.41	1.41	7	86	83	289	266	63	NA
B - 10		35.0	75.420	1.30	1.31	1.31	8	87	83	289	263	57	NA
B - 9		37.5	77.085	1.30	1.31	1.31	8	87	83	289	266	57	NA
B - 8		40.0	78.770	1.25	1.26	1.26	8	88	83	288	268	56	NA
B - 7		42.5	80.505	1.20	1.21	1.26	8	88	83	286	268	57	NA
B - 6		45.0	82.200	0.91	0.91	0.91	8	88	84	290	266	57	NA
B - 5		47.5	83.680	0.84	0.84	0.84	7	88	84	290	268	58	NA
B - 4		50.0	85.140	0.83	0.83	0.83	7	88	84	290	265	58	NA
B - 3		52.5	86.565	0.82	0.82	0.82	7	88	84	289	264	58	NA
B - 2		55.0	87.975	0.90	0.90	0.90	7	88	84	290	268	58	NA
B - 1		57.5	89.400	0.91	0.91	0.91	7	88	84	290	266	58	NA
-	1809	60.0	90.810										
-													
-													
-													
-													
-													
						MAX =>	8						
Average Values		60.0	38.770	1.145	1.16	1.17		85		289			

EPA Method 3 for Molecular Weight Determination

Client Name	Covanta Energy Group, Inc.	**Project #**	13022
Plant Name	Huntington Resource Recovery Facility	**Fuel Type**	MSW
Plant City, State	East Northport, NY	**Fo Min**	
Test Location	Unit 2 FF Outlet	**Fo Max**	

Date	8/28/13	**Run Number**	2-O-M316-1		**ORSAT ID**	2	**Leak Ck?**
Shared With			**Start Time**	0947	**Stop Time**	1052	Y
Sample Analysis Time	**Carbon Dioxide Concentra.**	**Oxygen Concentra.**	**Oxygen Concentra. by difference**	**CO & Nitrogen Concentra.**	**Carbon Dioxide Difference**	**Oxygen Difference**	**Operator** DGB **Bag #**
	(%CO_2)	reading	(%O_2)	(%CO+N_2)	(M_d)	(ΔM_d)	OB4
hh:mm	reading	reading	reading	percent	lb/lb-mole	lb/lb-mole	**Fyrite #s**
1128	9.5	19.6	10.1	80.4	0.1	0.0	
1135	9.4	19.5	10.1	80.5	0.1	0.0	**Fo**
1142	9.5	19.6	10.1	80.4	0.0	0.0	
Averages	9.5		10.1	80.4	OK	OK	

Date	8/28/13	**Run Number**	2-O-M316-2		**ORSAT ID**	2	**Leak Ck?**
Shared With			**Start Time**	1358	**Stop Time**	1539	Y
Sample Analysis Time	**Carbon Dioxide Concentra.**	**Oxygen Concentra.**	**Oxygen Concentra. by difference**	**CO & Nitrogen Concentra.**	**Carbon Dioxide Difference**	**Oxygen Difference**	**Operator** DGB **Bag #**
	(%CO_2)	reading	(%O_2)	(%CO+N_2)	(M_d)	(ΔM_d)	OB6
hh:mm	reading	reading	reading	percent	lb/lb-mole	lb/lb-mole	**Fyrite #s**
1619	9.1	19.6	10.5	80.4	0.1	0.1	
1626	9.2	19.6	10.4	80.4	0.0	0.0	**Fo**
1633	9.2	19.6	10.4	80.4	0.1	0.1	
Averages	9.2		10.4	80.4	OK	OK	

Date	8/28/13	**Run Number**	2-O-M316-3		**ORSAT ID**	2	**Leak Ck?**
Shared With			**Start Time**	1718	**Stop Time**	1822	Y
Sample Analysis Time	**Carbon Dioxide Concentra.**	**Oxygen Concentra.**	**Oxygen Concentra. by difference**	**CO & Nitrogen Concentra.**	**Carbon Dioxide Difference**	**Oxygen Difference**	**Operator** DGB **Bag #**
	(%CO_2)	reading	(%O_2)	(%CO+N_2)	(M_d)	(ΔM_d)	OB5
hh:mm	reading	reading	reading	percent	lb/lb-mole	lb/lb-mole	**Fyrite #s**
1837	9.4	19.6	10.2	80.4	0.1	0.1	
1844	9.5	19.6	10.1	80.4	0.0	0.0	**Fo**
1851	9.5	19.6	10.1	80.4	0.1	0.1	
Averages	9.5		10.1	80.4	OK	OK	

Date	8/28/13	**Run Number**			**ORSAT ID**	2	**Leak Ck?**
Shared With			**Start Time**		**Stop Time**		Y
Sample Analysis Time	**Carbon Dioxide Concentra.**	**Oxygen Concentra.**	**Oxygen Concentra. by difference**	**CO & Nitrogen Concentra.**	**Carbon Dioxide Difference**	**Oxygen Difference**	**Operator** DGB **Bag #**
	(%CO_2)	reading	(%O_2)	(%CO+N_2)	(M_d)	(ΔM_d)	
hh:mm	reading	reading	reading	percent	lb/lb-mole	lb/lb-mole	**Fyrite #s**
			0.0	100.0			
			0.0	100.0			**Fo**
			0.0	100.0			
Averages	#DIV/0!		0.0	#DIV/0!			

Signature:	[signature]	**Checked by:**	[signature]

EPA Method 4 for Percent Moisture Determination

Client Name	Covanta Energy Group, Inc.	**Project #**	13022
Plant Name	Huntington Resource Rec Fac	**Balance Type**	Electronic
Plant City, State	East Northport, NY	**Balance ID**	EB1
Sampling Location	Unit 2 FF Outlet	**Operator Name**	Blake Cone

Run Number	2-O-M316-1	2-O-M316-2	2-O-M316-3	
Test Date	8/28/13	8/28/13	8/28/13	
Reagent Box ID				

Impinger Reagent	DI	mL	mL	mL	mL
Final Catch Weight	grams	434.0	406.0	422.2	
Initial Tare Weight	grams	266.5	268.5	269.0	
Net Moisture Caught	grams	167.5	137.5	153.2	0.0

Impinger Reagent		mL	mL	mL	mL
Final Catch Weight	grams				
Initial Tare Weight	grams				
Net Moisture Caught	grams	0.0	0.0	0.0	0.0

Impinger Reagent		mL	mL	mL	mL
Final Catch Weight	grams				
KMNo4 Weight	grams				
KMnO4 g/mL	1.1				
Initial Jar Tare Weight	grams				
Net Moisture Caught	grams	0.0	0.0	0.0	0.0

Silica Gel	SG	grams	grams	grams	grams
Final Catch Weight	grams	280.5	284.6	288.4	
Initial Tare Weight	grams	275.0	280.5	284.6	
Net Moisture Caught	grams	5.5	4.1	3.8	0.0

Total Catch	grams	173.0	141.6	157.0	0.0

Signature:			**Checked By:**	David T. Bittle

ISOKINETIC SAMPLING TRAIN DATASHEET - METHOD M316

Client Name	Covanta Energy Group, Inc.	Run #	2-O-M316-1		
Plant Name	Huntington Resource Recovery Facility	Project #	13022	Run Start	947
Plant City, State	East Northport, NY	Personnel	EMK	Run End	1052
Test Location	Unit 2 FF Outlet	Tester Signature			
Date of Test	8/28/13	Checked By			

Isokinetic Factor Setup		Pressures		Sampling Equipment			Filter ID & Tares	Actuals
ΔH @ 0.75 SCFM	1.735	Pbar	29.7	Meter Console #		T6		CO_2
Meter Calibration Factor	0.9754	Pstatic	-15.00	Ideal Nozzle Diameter		0.245		9.5
Pitot Tube Coefficient	0.84	Tstd, °F	68	Nozzle #		GN477		O_2
Estimated DGM Temp	75	Pstd	29.92	Actual Nozzle Diameter		0.211	XAD ID & Tares	10.1
Estimated Stack Temp or M2 Avg.	285	Diluent Estimates		Probe Lgth/ID #	6'	158		CO
Estimated Delta P or M2 Avg.	1.00			Liner Material		BG	Y_{qa}	0.0
Estimated Moisture Content	19.0	CO_2	8.5	Filter Box #		HB7	0.9505	N_2
Estimated Dry Molecular Weight	29.80	O_2	11.0	Cold Box ID #		CB17	2.56%	80.4
Estimated Velocity, ft/sec	69.8	CO	0.0	Umbilical ID #		U50-9	PASS	H_2O
K Factor (delta H/delta P)	1.01	N_2	80.5	TC ID #s		158		173.0

Equipment Checks		PRE	POST	Leak Checks	1	2	3	4	5	6	Status
Tambient		85	87	DGM Initial							0.000
Thermocouples		Y	Y	Vacuum	15	5					15
Pitots		Y	Y	Leak Rate	0.000	0.000					OK
Tedlar Bag	OB4	Y	Y	DGM final							0.000

Point #	Clock Time	Test Time	Dry Gas Meter Reading	Velocity Head	Desired Orifice ΔH	Actual Orifice ΔH	Pump Vac.	DGM Inlet Temp	DGM Outlet Temp	Stack Temp	Filter Temp	Imp. Exit Temp	Cond. Exit Temp
	24 hr	min	ft^3	in H_2O	in H_2O	in H_2O	in Hg	°F	°F	°F	°F	°F	°F
B - 12	947	0.0	399.900	1.50	1.51	1.51	3	87	87	278	264	65	NA
B - 11		2.5	401.600	1.45	1.46	1.46	3	87	87	281	260	58	NA
B - 10		5.0	403.410	1.40	1.41	1.41	3	89	86	279	260	53	NA
B - 9		7.5	405.180	1.40	1.41	1.41	3	89	87	279	260	52	NA
B - 8		10.0	406.970	1.20	1.21	1.21	2	91	87	278	261	52	NA
B - 7		12.5	408.650	1.10	1.11	1.11	2	91	87	279	260	53	NA
B - 6		15.0	410.265	1.05	1.06	1.06	2	92	87	278	260	54	NA
B - 5		17.5	411.790	1.00	1.01	1.01	2	92	87	277	260	54	NA
B - 4		20.0	413.310	0.91	0.92	0.92	2	92	87	278	260	54	NA
B - 3		22.5	414.780	0.84	0.85	0.85	2	92	87	279	261	54	NA
B - 2		25.0	416.180	0.80	0.81	0.81	2	93	85	278	260	55	NA
B - 1		27.5	417.570	0.80	0.81	0.81	2	93	88	276	260	55	NA
A - 12	1017/	30.0	418.880	1.40	1.41	1.41	2	91	88	277	264	63	NA
A - 11	1022	32.5	420.770	1.40	1.41	1.41	2	93	89	278	260	56	NA
A - 10		35.0	422.500	1.30	1.31	1.31	2	94	89	278	260	55	NA
A - 9		37.5	424.240	1.25	1.26	1.26	2	94	89	279	260	56	NA
A - 8		40.0	425.925	1.10	1.11	1.11	2	95	89	279	260	56	NA
A - 7		42.5	427.565	1.05	1.06	1.06	2	95	89	279	260	57	NA
A - 6		45.0	429.140	0.94	0.95	0.95	2	95	89	278	260	57	NA
A - 5		47.5	430.620	0.92	0.93	0.93	2	95	90	279	260	58	NA
A - 4		50.0	432.070	0.88	0.89	0.89	2	95	90	279	260	59	NA
A - 3		52.5	433.510	0.87	0.88	0.88	2	95	90	278	260	59	NA
A - 2		55.0	434.915	0.86	0.87	0.87	2	95	90	278	260	60	NA
A - 1		57.5	436.320	0.84	0.85	0.85	2	95	90	278	260	60	NA
-	1052	60.0	437.755										
-													
-													
-													
-													
-													
						MAX =>	3						
Average Values		60.0	37.855	1.082	1.10	1.10		90		278			

ISOKINETIC SAMPLING TRAIN DATASHEET - METHOD M316

Client Name	Covanta Energy Group, Inc.	Run #	2-O-M316-2		
Plant Name	Huntington Resource Recovery Facility	Project #	13022	Run Start	1358
Plant City, State	East Northport, NY	Personnel	EMK	Run End	1539
Test Location	Unit 2 FF Outlet	Tester Signature			
Date of Test	8/28/13	Checked By			

Isokinetic Factor Setup		Pressures		Sampling Equipment			Filter ID & Tares		Actuals
ΔH @ 0.75 SCFM	1.735	Pbar	29.7	Meter Console #		T6			CO_2
Meter Calibration Factor	0.9754	Pstatic	-15.00	Ideal Nozzle Diameter		0.245			9.2
Pitot Tube Coefficient	0.84	Tstd, °F	68	Nozzle #		GN477			O_2
Estimated DGM Temp	75	Pstd	29.92	Actual Nozzle Diameter		0.211	XAD ID & Tares		10.4
Estimated Stack Temp or M2 Avg.	285	Diluent		Probe Lgth/ID #	6'	158			CO
Estimated Delta P or M2 Avg.	1.00	Estimates		Liner Material		BG	Y_{qa}		0.0
Estimated Moisture Content	19.0	CO_2	8.5	Filter Box #		HB7	0.9343		N_2
Estimated Dry Molecular Weight	29.80	O_2	11.0	Cold Box ID #		CB17	4.22%		80.4
Estimated Velocity, ft/sec	69.8	CO	0.0	Umbilical ID #		U50-9	PASS		H_2O
K Factor (delta H/delta P)	1.01	N_2	80.5	TC ID #s		158			141.6

Equipment Checks		PRE	POST	Leak Checks	1	2	3	4	5	6	Status
Tambient		88	85	DGM initial							0.000
Thermocouples		Y	Y	Vacuum	15	4					15
Pitots		Y	Y	Leak Rate	0.000	0.000					OK
Tedlar Bag	OB6	Y	Y	DGM final							0.000

Point #	Clock Time	Test Time	Dry Gas Meter Reading	Velocity Head	Desired Orifice ΔH	Actual Orifice ΔH	Pump Vac.	DGM Inlet Temp	DGM Outlet Temp	Stack Temp	Filter Temp	Imp. Exit Temp	Cond. Exit Temp
	24 hr	min	ft^3	in H_2O	in H_2O	in H_2O	in Hg	°F	°F	°F	°F	°F	°F
B - 12	1358	0.0	514.220	0.95	0.96	0.96	2	90	90	278	255	63	NA
B - 11		2.5	515.720	0.94	0.95	0.95	2	92	90	278	255	58	NA
B - 10		5.0	517.210	0.90	0.91	0.91	2	92	90	278	255	56	NA
B - 9		7.5	518.760	0.88	0.89	0.89	2	92	90	278	255	56	NA
B - 8		10.0	520.195	0.88	0.89	0.89	2	92	90	278	255	56	NA
B - 7		12.5	521.690	0.84	0.85	0.85	2	92	90	278	258	56	NA
B - 6		15.0	523.120	0.84	0.85	0.85	2	93	90	278	256	56	NA
B - 5		17.5	524.650	0.80	0.81	0.81	2	93	90	278	255	56	NA
B - 4		20.0	526.050	0.78	0.79	0.79	2	93	90	280	255	56	NA
B - 3		22.5	527.380	0.74	0.75	0.75	2	92	90	276	256	57	NA
B - 2		25.0	528.645	0.72	0.73	0.73	2	93	90	277	256	57	NA
B - 1		27.5	530.050	0.70	0.71	0.71	2	93	90	275	256	57	NA
A - 12	1428/	30.0	531.325	0.99	1.00	1.00	2	89	89	279	255	65	NA
A - 11	1509	32.5	532.900	1.05	1.06	1.06	2	89	89	279	254	59	NA
A - 10		35.0	534.450	1.15	1.16	1.16	2	88	88	279	255	57	NA
A - 9		37.5	536.110	1.15	1.16	1.16	2	88	88	278	254	56	NA
A - 8		40.0	537.790	1.20	1.21	1.21	2	88	88	279	254	56	NA
A - 7		42.5	539.450	0.98	0.99	0.99	2	88	87	278	254	57	NA
A - 6		45.0	540.915	0.98	0.99	0.99	2	88	88	278	254	59	NA
A - 5		47.5	542.410	0.92	0.93	0.93	2	89	87	278	254	59	NA
A - 4		50.0	543.890	0.86	0.87	0.87	2	89	87	278	254	60	NA
A - 3		52.5	545.270	0.82	0.83	0.83	2	89	87	278	254	60	NA
A - 2		55.0	546.680	0.78	0.79	0.79	2	90	87	278	254	60	NA
A - 1		57.5	548.020	0.74	0.75	0.75	2	90	87	278	254	61	NA
-	1539	60.0	549.280										
-													
-													
-													
-													
-													
						MAX =>	2						
Average Values		60.0	35.060	0.895	0.91	0.91		90		278			

ISOKINETIC SAMPLING TRAIN DATASHEET - METHOD M316

Client Name	Covanta Energy Group, Inc.	Run #	2-O-M316-3		
Plant Name	Huntington Resource Recovery Facility	Project #	13022	Run Start	1718
Plant City, State	East Northport, NY	Personnel	EMK	Run End	1822
Test Location	Unit 2 FF Outlet	Tester Signature			
Date of Test	8/28/13	Checked By			

Isokinetic Factor Setup		Pressures		Sampling Equipment			Filter ID & Tares		Actuals
ΔH @ 0.75 SCFM	1.735	Pbar	29.7	Meter Console #		T6			CO_2
Meter Calibration Factor	0.9754	Pstatic	-15.00	Ideal Nozzle Diameter		0.245			9.5
Pitot Tube Coefficient	0.84	Tstd, °F	68	Nozzle #		GN477			O_2
Estimated DGM Temp	75	Pstd	29.92	Actual Nozzle Diameter		0.211	XAD ID & Tares		10.1
Estimated Stack Temp or M2 Avg.	285	Diluent Estimates		Probe Lgth/ID #	6'	158			CO
Estimated Delta P or M2 Avg.	1.00			Liner Material		BG	Y_{qa}		0.0
Estimated Moisture Content	19.0	CO_2	8.5	Filter Box #		HB7	0.9399		N_2
Estimated Dry Molecular Weight	29.80	O_2	11.0	Cold Box ID #		CB17	3.64%		80.4
Estimated Velocity, ft/sec	69.8	CO	0.0	Umbilical ID #		U50-9	PASS		H_20
K Factor (delta H/delta P)	1.01	N_2	80.5	TC ID #s		158			157.0

Equipment Checks		PRE	POST	Leak Checks	1	2	3	4	5	6	Status
Tambient		84	83	DGM initial							0.000
Thermocouples		Y	Y	Vacuum	15	7					15
Pitots		Y	Y	Leak Rate	0.000	0.000					OK
Tedlar Bag	OB5	Y	Y	DGM final							0.000

Point #	Clock Time	Test Time	Dry Gas Meter Reading	Velocity Head	Desired Orifice ΔH	Actual Orifice ΔH	Pump Vac.	DGM Inlet Temp	DGM Outlet Temp	Stack Temp	Filter Temp	Imp. Exit Temp	Cond. Exit Temp
	24 hr	min	ft^3	in H_2O	in H_2O	in H_2O	in Hg	°F	°F	°F	°F	°F	°F
B - 12	1718	0.0	587.640	1.10	1.11	1.15	2	86	85	276	253	63	NA
B - 11		2.5	589.270	1.15	1.16	1.16	2	87	85	277	253	63	NA
B - 10		5.0	590.890	1.20	1.21	1.21	2	87	85	278	254	62	NA
B - 9		7.5	592.560	1.05	1.06	1.06	2	88	85	278	254	59	NA
B - 8		10.0	594.130	1.00	1.01	1.01	2	89	85	278	254	54	NA
B - 7		12.5	595.680	0.98	0.99	0.99	2	89	85	277	255	53	NA
B - 6		15.0	597.195	0.94	0.95	0.95	2	89	85	277	255	52	NA
B - 5		17.5	598.690	0.93	0.94	0.94	2	89	85	278	254	52	NA
B - 4		20.0	600.160	0.93	0.94	0.94	2	89	86	278	255	53	NA
B - 3		22.5	601.580	0.89	0.90	0.90	2	89	86	278	254	53	NA
B - 2		25.0	603.020	0.85	0.86	0.86	2	90	86	276	255	53	NA
B - 1		27.5	604.440	0.81	0.82	0.82	2	90	86	276	254	52	NA
A - 12	1748/	30.0	605.875	1.20	1.21	1.21	2	87	86	272	248	61	NA
A - 11	1752	32.5	607.430	1.20	1.21	1.21	2	89	86	278	255	54	NA
A - 10		35.0	609.050	1.05	1.06	1.06	2	89	86	278	255	53	NA
A - 9		37.5	610.620	1.00	1.01	1.01	2	89	86	277	256	53	NA
A - 8		40.0	612.210	0.95	0.96	0.96	2	90	86	277	255	53	NA
A - 7		42.5	613.720	0.92	0.93	0.93	2	90	86	277	255	54	NA
A - 6		45.0	615.200	0.88	0.89	0.89	2	90	86	278	255	55	NA
A - 5		47.5	616.600	0.84	0.85	0.85	2	91	86	277	255	54	NA
A - 4		50.0	618.060	0.80	0.81	0.81	2	90	86	276	258	55	NA
A - 3		52.5	619.410	0.77	0.78	0.78	2	90	86	277	255	56	NA
A - 2		55.0	620.790	0.74	0.75	0.75	2	90	86	277	255	57	NA
A - 1		57.5	622.160	0.72	0.73	0.73	2	90	86	277	255	57	NA
-	1822	60.0	623.450										
-													
-													
-													
-													
-													
						MAX =>	2						
Average Values		60.0	35.810	0.949	0.96	0.97		87		277			

EPA Method 3 for Molecular Weight Determination

Client Name	Covanta Energy Group, Inc.	**Project #**	13022
Plant Name	Huntington Resource Recovery Facility	**Fuel Type**	MSW
Plant City, State	East Northport, NY	**Fo Min**	
Test Location	Unit 2 FF Outlet	**Fo Max**	

Date	8/28/13	**Run Number**	2-O-M8-1		**ORSAT ID**	2	**Leak Ck?**
Shared With			**Start Time**	1109	**Stop Time**	1214	Y
Sample Analysis Time	**Carbon Dioxide Concentra.**	**Oxygen Concentra.**	**Oxygen Concentra. by difference**	**CO & Nitrogen Concentra.**	**Carbon Dioxide Difference**	**Oxygen Difference**	**Operator** DGB **Bag #**
	(%CO_2)	reading	(%O_2)	(%CO+N_2)	(M_d)	(ΔM_d)	OB2
hh:mm	reading	reading	reading	percent	lb/lb-mole	lb/lb-mole	**Fyrite #s**
1245	9.6	19.6	10.0	80.4	0.1	0.1	
1252	9.5	19.6	10.1	80.4	0.1	0.1	**Fo**
1259	9.6	19.6	10.0	80.4	0.0	0.0	
Averages	9.6		10.0	80.4	OK	OK	

Date	8/28/13	**Run Number**	2-O-M8-2		**ORSAT ID**	2	**Leak Ck?**
Shared With			**Start Time**	1232	**Stop Time**	1336	Y
Sample Analysis Time	**Carbon Dioxide Concentra.**	**Oxygen Concentra.**	**Oxygen Concentra. by difference**	**CO & Nitrogen Concentra.**	**Carbon Dioxide Difference**	**Oxygen Difference**	**Operator** DGB **Bag #**
	(%CO_2)	reading	(%O_2)	(%CO+N_2)	(M_d)	(ΔM_d)	OB5
hh:mm	reading	reading	reading	percent	lb/lb-mole	lb/lb-mole	**Fyrite #s**
1403	9.2	19.6	10.4	80.4	0.1	0.1	
1407	9.1	19.6	10.5	80.4	0.0	0.0	**Fo**
1414	9.1	19.6	10.5	80.4	0.1	0.1	
Averages	9.1		10.5	80.4	OK	OK	

Date	8/28/13	**Run Number**	2-O-M8-3		**ORSAT ID**	2	**Leak Ck?**
Shared With			**Start Time**	1559	**Stop Time**	1703	Y
Sample Analysis Time	**Carbon Dioxide Concentra.**	**Oxygen Concentra.**	**Oxygen Concentra. by difference**	**CO & Nitrogen Concentra.**	**Carbon Dioxide Difference**	**Oxygen Difference**	**Operator** DGB **Bag #**
	(%CO_2)	reading	(%O_2)	(%CO+N_2)	(M_d)	(ΔM_d)	OB1
hh:mm	reading	reading	reading	percent	lb/lb-mole	lb/lb-mole	**Fyrite #s**
1733	9.5	19.6	10.1	80.4	0.1	0.1	
1740	9.4	19.6	10.2	80.4	0.1	0.1	**Fo**
1747	9.5	19.6	10.1	80.4	0.0	0.0	
Averages	9.5		10.1	80.4	OK	OK	

Date	8/28/13	**Run Number**			**ORSAT ID**	2	**Leak Ck?**
Shared With			**Start Time**		**Stop Time**		Y
Sample Analysis Time	**Carbon Dioxide Concentra.**	**Oxygen Concentra.**	**Oxygen Concentra. by difference**	**CO & Nitrogen Concentra.**	**Carbon Dioxide Difference**	**Oxygen Difference**	**Operator** DGB **Bag #**
	(%CO_2)	reading	(%O_2)	(%CO+N_2)	(M_d)	(ΔM_d)	
hh:mm	reading	reading	reading	percent	lb/lb-mole	lb/lb-mole	**Fyrite #s**
			0.0	100.0			
			0.0	100.0			**Fo**
			0.0	100.0			
Averages	#DIV/0!		0.0	#DIV/0!			

Signature:	[signature]	**Checked by:**	[signature]

EPA Method 4 for Percent Moisture Determination

Client Name	Covanta Energy Group, Inc.	**Project #**	13022
Plant Name	Huntington Resource Rec Fac	**Balance Type**	Electronic
Plant City, State	East Northport, NY	**Balance ID**	EB1
Sampling Location	Unit 2 FF Outlet	**Operator Name**	Blake Cone

Run Number	2-O-M8-1	2-O-M8-2	2-O-M8-3	
Test Date	8/28/13	8/28/13	8/28/13	
Reagent Box ID				

Impinger Reagent	IPA	mL	mL	mL	mL
Final Catch Weight	grams	422.7	433.9	424.7	
Initial Tare Weight	grams	324.5	324.5	321.0	
Net Moisture Caught	grams	98.2	109.4	103.7	0.0

Impinger Reagent	H2O2	mL	mL	mL	mL
Final Catch Weight	grams	494.5	492.2	485.0	
Initial Tare Weight	grams	444.5	442.0	443.0	
Net Moisture Caught	grams	50.0	50.2	42.0	0.0

Impinger Reagent		mL	mL	mL	mL
Final Catch Weight	grams				
KMNo4 Weight	grams				
KMnO4 g/mL	1.1				
Initial Jar Tare Weight	grams				
Net Moisture Caught	grams	0.0	0.0	0.0	0.0

Silica Gel	SG	grams	grams	grams	grams
Final Catch Weight	grams	285.0	276.6	284.3	
Initial Tare Weight	grams	270.6	261.5	276.6	
Net Moisture Caught	grams	14.4	15.1	7.7	0.0

Total Catch	grams	162.6	174.7	153.4	0.0

Signature:			**Checked By:**	

ISOKINETIC SAMPLING TRAIN DATASHEET - METHOD M8

Client Name	Covanta Energy Group, Inc.	Run #	2-O-M8-1		
Plant Name	Huntington Resource Recovery Facility	Project #	13022	Run Start	1109
Plant City, State	East Northport, NY	Personnel	EMK	Run End	1214
Test Location	Unit 2 FF Outlet	Tester Signature			
Date of Test	8/28/13	Checked By			

Isokinetic Factor Setup		Pressures		Sampling Equipment			Filter ID & Tares		Actuals
ΔH @ 0.75 SCFM	1.735	Pbar	29.7	Meter Console #		T6			CO_2
Meter Calibration Factor	0.9754	Pstatic	-15.00	Ideal Nozzle Diameter		0.245			9.6
Pitot Tube Coefficient	0.84	Tstd, °F	68	Nozzle #		GN482			O_2
Estimated DGM Temp	75	Pstd	29.92	Actual Nozzle Diameter		0.211	XAD ID & Tares		10.0
Estimated Stack Temp or M2 Avg.	285	Diluent Estimates		Probe Lgth/ID #	6'	161			CO
Estimated Delta P or M2 Avg.	1.00			Liner Material		BG	Y_{qa}		0.0
Estimated Moisture Content	19.0	CO_2	8.5	Filter Box #		HB7	0.9503		N_2
Estimated Dry Molecular Weight	29.80	O_2	11.0	Cold Box ID #		CB9	2.58%		80.4
Estimated Velocity, ft/sec	69.8	CO	0.0	Umbilical ID #		U50-7	PASS		H_2O
K Factor (delta H/delta P)	1.01	N_2	80.5	TC ID #s		161			162.6

Equipment Checks		PRE	POST	Leak Checks	1	2	3	4	5	6	Status
Tambient		89	89	DGM initial							0.000
Thermocouples		Y	Y	Vacuum	15	7					15
Pitots		Y	Y	Leak Rate	0.000	0.000					OK
Tedlar Bag	OB2	Y	Y	DGM final							0.000

Point #	Clock Time	Test Time	Dry Gas Meter Reading	Velocity Head	Desired Orifice ΔH	Actual Orifice ΔH	Pump Vac.	DGM Inlet Temp	DGM Outlet Temp	Stack Temp	Filter Temp	Imp. Exit Temp	Cond. Exit Temp
	24 hr	min	ft^3	in H_2O	in H_2O	in H_2O	in Hg	°F	°F	°F	°F	°F	°F
A - 12	1109	0.0	437.920	1.30	1.31	1.31	5	91	90	278	258	63	NA
A - 11		2.5	439.660	1.20	1.21	1.21	5	93	91	277	257	64	NA
A - 10		5.0	441.340	1.25	1.26	1.26	5	93	91	277	257	61	NA
A - 9		7.5	442.950	1.15	1.16	1.16	4	94	91	278	258	58	NA
A - 8		10.0	444.610	1.10	1.11	1.11	4	94	91	278	258	57	NA
A - 7		12.5	446.170	1.05	1.06	1.06	4	94	92	278	258	57	NA
A - 6		15.0	447.715	0.95	0.96	0.96	4	95	91	279	254	56	NA
A - 5		17.5	449.185	0.92	0.93	0.93	4	94	91	280	259	57	NA
A - 4		20.0	450.660	0.90	0.91	0.91	4	94	91	279	259	57	NA
A - 3		22.5	452.090	0.87	0.88	0.88	4	95	91	278	259	57	NA
A - 2		25.0	453.510	0.85	0.86	0.86	4	95	91	278	259	57	NA
A - 1		27.5	454.940	0.80	0.81	0.81	4	95	91	278	261	57	NA
B - 12	1139/	30.0	456.370	1.20	1.21	1.21	4	91	91	278	260	67	NA
B - 11	1144	32.5	457.990	1.10	1.11	1.11	4	93	90	279	260	55	NA
B - 10		35.0	459.550	1.15	1.16	1.16	4	94	91	279	260	55	NA
B - 9		37.5	461.165	1.05	1.06	1.06	4	94	91	278	260	55	NA
B - 8		40.0	462.780	0.95	0.96	0.96	4	95	91	278	260	55	NA
B - 7		42.5	464.250	0.93	0.94	0.94	4	94	91	278	260	56	NA
B - 6		45.0	465.700	0.86	0.87	0.87	4	94	91	279	259	56	NA
B - 5		47.5	467.180	0.83	0.84	0.84	4	94	91	279	259	57	NA
B - 4		50.0	468.530	0.80	0.81	0.81	4	94	91	278	259	58	NA
B - 3		52.5	469.910	0.79	0.80	0.80	4	94	91	279	259	57	NA
B - 2		55.0	471.285	0.77	0.78	0.78	4	94	91	279	259	57	NA
B - 1		57.5	472.595	0.77	0.78	0.78	4	94	91	279	259	58	NA
-	1214	60.0	473.930										
-													
-													
-													
-													
-													
						MAX =>	5						
Average Values		60.0	36.010	0.974	0.99	0.99		92		278			

ISOKINETIC SAMPLING TRAIN DATASHEET - METHOD M8

Client Name	Covanta Energy Group, Inc.	Run #	2-O-M8-2		
Plant Name	Huntington Resource Recovery Facility	Project #	13022	Run Start	1232
Plant City, State	East Northport, NY	Personnel	EMK	Run End	1336
Test Location	Unit 2 FF Outlet	Tester Signature			
Date of Test	8/28/13	Checked By	David S. Birth		

Isokinetic Factor Setup		Pressures		Sampling Equipment			Filter ID & Tares	Actuals
ΔH @ 0.75 SCFM	1.735	Pbar	29.7	Meter Console #		T6		CO_2
Meter Calibration Factor	0.9754	Pstatic	-15.00	Ideal Nozzle Diameter		0.245		9.1
Pitot Tube Coefficient	0.84	Tstd, °F	68	Nozzle #		GN480		O_2
Estimated DGM Temp	75	Pstd	29.92	Actual Nozzle Diameter		0.214	XAD ID & Tares	10.5
Estimated Stack Temp or M2 Avg.	285	Diluent Estimates		Probe Lgth/ID #	6'	160		CO
Estimated Delta P or M2 Avg.	1.00			Liner Material		BG	Y_{qa}	0.0
Estimated Moisture Content	19.0	CO_2	8.5	Filter Box #		HB7	0.9384	N_2
Estimated Dry Molecular Weight	29.80	O_2	11.0	Cold Box ID #		CB9	3.79%	80.4
Estimated Velocity, ft/sec	69.8	CO	0.0	Umbilical ID #		U50-7	PASS	H_2O
K Factor (delta H/delta P)	1.07	N_2	80.5	TC ID #s		160		174.7

Equipment Checks		PRE	POST	Leak Checks	1	2	3	4	5	6	Status
Tambient		88	87	DGM initial							0.000
Thermocouples		Y	Y	Vacuum	15	8					15
Pitots		Y	Y	Leak Rate	0.000	0.000					OK
Tedlar Bag	OB5	Y	Y	DGM final							0.000

Point #	Clock Time	Test Time	Dry Gas Meter Reading	Velocity Head	Desired Orifice ΔH	Actual Orifice ΔH	Pump Vac.	DGM Inlet Temp	DGM Outlet Temp	Stack Temp	Filter Temp	Imp. Exit Temp	Cond. Exit Temp
	24 hr	min	ft^3	in H_2O	in H_2O	in H_2O	in Hg	°F	°F	°F	°F	°F	°F
A - 12	1232	0.0	474.390	1.20	1.28	1.28	5	90	90	278	254	65	NA
A - 11		2.5	476.100	1.20	1.28	1.28	5	91	90	278	255	55	NA
A - 10		5.0	477.815	1.25	1.33	1.33	5	91	90	277	257	50	NA
A - 9		7.5	479.560	1.15	1.23	1.23	5	92	90	277	258	48	NA
A - 8		10.0	481.320	1.20	1.28	1.28	5	92	90	278	259	48	NA
A - 7		12.5	483.035	1.10	1.17	1.17	5	92	89	279	255	48	NA
A - 6		15.0	484.720	1.15	1.23	1.23	5	92	89	278	259	49	NA
A - 5		17.5	486.425	0.95	1.01	1.01	4	92	89	279	255	49	NA
A - 4		20.0	487.950	0.92	0.98	0.98	4	92	89	278	256	50	NA
A - 3		22.5	489.480	0.96	1.02	1.02	4	93	89	279	255	51	NA
A - 2		25.0	491.010	0.91	0.97	0.97	4	93	89	278	256	51	NA
A - 1		27.5	492.520	0.86	0.92	0.92	4	93	89	278	256	52	NA
B - 12	1302/	30.0	493.955	1.55	1.65	1.65	5	90	89	279	254	63	NA
B - 11	1306	32.5	495.800	1.50	1.60	1.60	5	92	89	279	255	52	NA
B - 10		35.0	497.665	1.45	1.55	1.55	5	93	89	280	256	51	NA
B - 9		37.5	499.520	1.35	1.44	1.44	5	93	89	279	256	52	NA
B - 8		40.0	501.370	1.20	1.28	1.28	5	93	89	279	256	54	NA
B - 7		42.5	503.095	0.99	1.06	1.06	5	93	90	277	256	55	NA
B - 6		45.0	504.690	0.98	1.05	1.05	5	93	89	276	255	53	NA
B - 5		47.5	506.310	0.92	0.98	0.98	5	93	89	279	256	53	NA
B - 4		50.0	507.830	0.90	0.96	0.96	5	93	90	279	256	54	NA
B - 3		52.5	509.415	0.90	0.96	0.96	5	93	89	278	255	56	NA
B - 2		55.0	510.910	0.88	0.94	0.94	5	93	90	278	255	54	NA
B - 1		57.5	512.440	0.85	0.91	0.91	5	93	89	277	256	54	NA
-	1336	60.0	513.950										
-													
-													
-													
-													
-													
						MAX =>	5						
Average Values		60.0	39.560	1.087	1.17	1.17		91		278			

ISOKINETIC SAMPLING TRAIN DATASHEET - METHOD M8

Client Name	Covanta Energy Group, Inc.	Run #	2-O-M8-3		
Plant Name	Huntington Resource Recovery Facility	Project #	13022	Run Start	1559
Plant City, State	East Northport, NY	Personnel	EMK	Run End	1703
Test Location	Unit 2 FF Outlet	Tester Signature			
Date of Test	8/28/13	Checked By			

Isokinetic Factor Setup		Pressures		Sampling Equipment			Filter ID & Tares		Actuals
ΔH @ 0.75 SCFM	1.735	Pbar	29.7	Meter Console #		T6			CO_2
Meter Calibration Factor	0.9754	Pstatic	-15.00	Ideal Nozzle Diameter		0.245			9.5
Pitot Tube Coefficient	0.84	Tstd, °F	68	Nozzle #		GN480			O_2
Estimated DGM Temp	75	Pstd	29.92	Actual Nozzle Diameter		0.214	XAD ID & Tares		10.1
Estimated Stack Temp or M2 Avg.	285	Diluent		Probe Lgth/ID #	6'	160			CO
Estimated Delta P or M2 Avg.	1.00	Estimates		Liner Material		BG	Y_{qa}		0.0
Estimated Moisture Content	19.0	CO_2	8.5	Filter Box #		HB7	0.9370		N_2
Estimated Dry Molecular Weight	29.80	O_2	11.0	Cold Box ID #		CB17	3.94%		80.4
Estimated Velocity, ft/sec	69.8	CO	0.0	Umbilical ID #		U50-7	PASS		H_2O
K Factor (delta H/delta P)	1.07	N_2	80.5	TC ID #s		160			153.4

Equipment Checks		PRE	POST	Leak Checks	1	2	3	4	5	6	Status
Tambient		84	84	DGM initial							0.000
Thermocouples		Y	Y	Vacuum	15	5					15
Pitots		Y	Y	Leak Rate	0.000	0.000					OK
Tedlar Bag	OB1	Y	Y	DGM final							0.000

Point #	Clock Time	Test Time	Dry Gas Meter Reading	Velocity Head	Desired Orifice ΔH	Actual Orifice ΔH	Pump Vac.	DGM Inlet Temp	DGM Outlet Temp	Stack Temp	Filter Temp	Imp. Exit Temp	Cond. Exit Temp
	24 hr	min	ft^3	in H_2O	in H_2O	in H_2O	in Hg	°F	°F	°F	°F	°F	°F
A - 12	1559	0.0	550.445	0.92	0.98	1.02	4	86	86	280	251	66	NA
A - 11		2.5	552.010	0.89	0.95	0.95	4	87	86	276	253	63	NA
A - 10		5.0	553.585	1.00	1.07	1.07	4	87	86	276	253	61	NA
A - 9		7.5	555.130	1.05	1.12	1.12	4	88	86	278	253	60	NA
A - 8		10.0	556.790	1.05	1.12	1.12	4	89	86	278	254	60	NA
A - 7		12.5	558.430	0.97	1.03	1.03	4	89	86	278	254	60	NA
A - 6		15.0	559.975	0.94	1.00	1.00	4	89	86	276	254	60	NA
A - 5		17.5	561.520	0.92	0.98	0.98	4	89	86	278	255	60	NA
A - 4		20.0	563.044	0.88	0.94	0.94	4	89	86	278	254	60	NA
A - 3		22.5	564.600	0.87	0.93	0.93	4	90	86	278	254	60	NA
A - 2		25.0	566.075	0.82	0.87	0.87	4	90	86	278	256	60	NA
A - 1		27.5	567.510	0.78	0.83	0.83	4	89	86	277	255	60	NA
B - 12	1629/	30.0	568.910	1.25	1.33	1.33	4	87	86	277	255	66	NA
B - 11	1633	32.5	570.620	1.20	1.28	1.28	4	87	86	277	254	62	NA
B - 10		35.0	572.190	1.25	1.33	1.33	4	89	86	278	254	61	NA
B - 9		37.5	573.920	1.25	1.33	1.33	4	89	86	278	254	61	NA
B - 8		40.0	575.650	1.10	1.17	1.17	4	90	86	277	255	62	NA
B - 7		42.5	577.290	0.93	0.99	0.99	4	89	86	277	253	62	NA
B - 6		45.0	578.810	0.91	0.97	0.97	4	89	86	278	254	62	NA
B - 5		47.5	580.310	0.88	0.94	0.94	4	89	86	278	256	62	NA
B - 4		50.0	581.810	0.84	0.90	0.90	4	89	86	278	256	62	NA
B - 3		52.5	583.280	0.80	0.85	0.85	3	89	86	278	256	63	NA
B - 2		55.0	584.675	0.77	0.82	0.82	3	89	86	278	254	63	NA
B - 1		57.5	586.065	0.77	0.82	0.82	3	88	86	278	255	63	NA
-	1703	60.0	587.430										
-													
-													
-													
-													
-													
					MAX =>		4						
Average Values		60.0	36.985	0.954	1.02	1.02		87		278			

EPA Method 3 for Molecular Weight Determination

Client Name	Covanta Energy Group, Inc.	**Project #**	13022
Plant Name	Huntington Resource Recovery Facility	**Fuel Type**	MSW
Plant City, State	East Northport, NY	**Fo Min**	
Test Location	Unit 3 FF Outlet	**Fo Max**	

Date	8/29/13	**Run Number**	3-O-M316-1		**ORSAT ID**	2	**Leak Ck?**
Shared With			**Start Time**	0928	**Stop Time**	1032	Y
Sample Analysis Time	Carbon Dioxide Concentra.	Oxygen Concentra.	Oxygen Concentra. by difference	CO & Nitrogen Concentra.	Carbon Dioxide Difference	Oxygen Difference	**Operator** DGB **Bag #**
	($\%CO_2$)	reading	($\%O_2$)	($\%CO+N_2$)	(M_d)	(ΔM_d)	OB6
hh:mm	reading	reading	reading	percent	lb/lb-mole	lb/lb-mole	**Fyrite #s**
1048	8.8	19.8	11.0	80.2	0.1	0.0	
1055	8.7	19.7	11.0	80.3	0.0	0.0	**Fo**
1102	8.7	19.7	11.0	80.3	0.1	0.0	
Averages	8.7		11.0	80.3	OK	OK	

Date	8/29/13	**Run Number**	3-O-M316-2		**ORSAT ID**	2	**Leak Ck?**
Shared With			**Start Time**	1154	**Stop Time**	1258	Y
Sample Analysis Time	Carbon Dioxide Concentra.	Oxygen Concentra.	Oxygen Concentra. by difference	CO & Nitrogen Concentra.	Carbon Dioxide Difference	Oxygen Difference	**Operator** DGB **Bag #**
	($\%CO_2$)	reading	($\%O_2$)	($\%CO+N_2$)	(M_d)	(ΔM_d)	OB8
hh:mm	reading	reading	reading	percent	lb/lb-mole	lb/lb-mole	**Fyrite #s**
1328	8.8	19.7	10.9	80.3	0.1	0.0	
1335	8.9	19.8	10.9	80.2	0.1	0.0	**Fo**
1342	8.8	19.7	10.9	80.3	0.0	0.0	
Averages	8.8		10.9	80.3	OK	OK	

Date	8/29/13	**Run Number**	3-O-M316-3		**ORSAT ID**	2	**Leak Ck?**
Shared With			**Start Time**	1416	**Stop Time**	1519	Y
Sample Analysis Time	Carbon Dioxide Concentra.	Oxygen Concentra.	Oxygen Concentra. by difference	CO & Nitrogen Concentra.	Carbon Dioxide Difference	Oxygen Difference	**Operator** DGB **Bag #**
	($\%CO_2$)	reading	($\%O_2$)	($\%CO+N_2$)	(M_d)	(ΔM_d)	OB6
hh:mm	reading	reading	reading	percent	lb/lb-mole	lb/lb-mole	**Fyrite #s**
1537	8.6	19.7	11.1	80.3	0.1	0.0	
1543	8.7	19.8	11.1	80.2	0.0	0.1	**Fo**
1550	8.7	19.7	11.0	80.3	0.1	0.1	
Averages	8.7		11.1	80.2	OK	OK	

Date	8/29/13	**Run Number**			**ORSAT ID**	2	**Leak Ck?**
Shared With			**Start Time**		**Stop Time**		Y
Sample Analysis Time	Carbon Dioxide Concentra.	Oxygen Concentra.	Oxygen Concentra. by difference	CO & Nitrogen Concentra.	Carbon Dioxide Difference	Oxygen Difference	**Operator** DGB **Bag #**
	($\%CO_2$)	reading	($\%O_2$)	($\%CO+N_2$)	(M_d)	(ΔM_d)	
hh:mm	reading	reading	reading	percent	lb/lb-mole	lb/lb-mole	**Fyrite #s**
			0.0	100.0			
			0.0	100.0			**Fo**
			0.0	100.0			
Averages	#DIV/0!		0.0	#DIV/0!			

Signature:	David B. Bittle	**Checked by:**	

EPA Method 4 for Percent Moisture Determination

Client Name	Covanta Energy Group, Inc.	**Project #**	13022
Plant Name	Huntington Resource Rec Fac	**Balance Type**	Electronic
Plant City, State	East Northport, NY	**Balance ID**	EB1
Sampling Location	Unit 3 FF Outlet	**Operator Name**	Blake Cone

Run Number	3-O-M316-1	3-O-M316-2	3-O-M316-3	
Test Date	8/29/13	8/29/13	8/29/13	
Reagent Box ID				

Impinger Reagent	DI	mL	mL	mL	mL
Final Catch Weight	grams	411.8	431.1	419.8	
Initial Tare Weight	grams	266.2	269.2	267.8	
Net Moisture Caught	grams	145.6	161.9	152.0	0.0

Impinger Reagent		mL	mL	mL	mL
Final Catch Weight	grams				
Initial Tare Weight	grams				
Net Moisture Caught	grams	0.0	0.0	0.0	0.0

Impinger Reagent		mL	mL	mL	mL
Final Catch Weight	grams				
KMNo4 Weight	grams				
KMnO4 g/mL	1.1				
Initial Jar Tare Weight	grams				
Net Moisture Caught	grams	0.0	0.0	0.0	0.0

Silica Gel	SG	grams	grams	grams	grams
Final Catch Weight	grams	253.8	258.6	263.9	
Initial Tare Weight	grams	248.7	253.8	258.6	
Net Moisture Caught	grams	5.1	4.8	5.3	0.0

Total Catch	grams	150.7	166.7	157.3	0.0

Signature:			**Checked By:**	

ISOKINETIC SAMPLING TRAIN DATASHEET - METHOD M316

Client Name	Covanta Energy Group, Inc.	Run #	3-O-M316-1		
Plant Name	Huntington Resource Recovery Facility	Project #	13022	Run Start	928
Plant City, State	East Northport, NY	Personnel	EMK	Run End	1032
Test Location	Unit 3 FF Outlet	Tester Signature			
Date of Test	8/29/13	Checked By			

Isokinetic Factor Setup		Pressures		Sampling Equipment			Filter ID & Tares	Actuals
ΔH @ 0.75 SCFM	1.812	Pbar	29.9	Meter Console #		T5		CO_2
Meter Calibration Factor	1.0150	Pstatic	-16.00	Ideal Nozzle Diameter		0.244		8.7
Pitot Tube Coefficient	0.84	Tstd, °F	68	Nozzle #		GN477		O_2
Estimated DGM Temp	75	Pstd	29.92	Actual Nozzle Diameter		0.211	XAD ID & Tares	11.0
Estimated Stack Temp or M2 Avg.	285	Diluent		Probe Lgth/ID #	6'	158		CO
Estimated Delta P or M2 Avg.	1.00	Estimates		Liner Material		BG	Y_{qa}	0.0
Estimated Moisture Content	19.0	CO_2	8.5	Filter Box #		HB3	1.0055	N_2
Estimated Dry Molecular Weight	29.80	O_2	11.0	Cold Box ID #		CB17	0.94%	80.3
Estimated Velocity, ft/sec	69.7	CO	0.0	Umbilical ID #		U50-9	PASS	H_2O
K Factor (delta H/delta P)	1.05	N_2	80.5	TC ID #s		158		150.7

Equipment Checks		PRE	POST	Leak Checks	1	2	3	4	5	6	Status
Tambient		70	73	DGM initial							0.000
Thermocouples		Y	Y	Vacuum	15	10					15
Pitots		Y	Y	Leak Rate	0.000	0.000					OK
Tedlar Bag	OB6	Y	Y	DGM final							0.000

Point #	Clock Time	Test Time	Dry Gas Meter Reading	Velocity Head	Desired Orifice ΔH	Actual Orifice ΔH	Pump Vac.	DGM Inlet Temp	DGM Outlet Temp	Stack Temp	Filter Temp	Imp. Exit Temp	Cond. Exit Temp
	24 hr	min	ft^3	in H_2O	in H_2O	in H_2O	in Hg	°F	°F	°F	°F	°F	°F
B - 12	928	0.0	522.410	1.25	1.31	1.31	3	70	70	293	267	66	NA
B - 11		2.5	523.980	1.30	1.37	1.37	3	71	70	294	267	58	NA
B - 10		5.0	525.550	1.15	1.21	1.21	3	71	70	294	267	58	NA
B - 9		7.5	527.025	1.10	1.16	1.16	3	72	70	293	267	58	NA
B - 8		10.0	528.540	0.98	1.03	1.03	3	72	70	294	266	58	NA
B - 7		12.5	529.940	0.94	0.99	0.99	3	72	70	294	266	59	NA
B - 6		15.0	531.310	0.91	0.96	0.96	2	75	71	293	264	60	NA
B - 5		17.5	532.650	0.90	0.95	0.95	2	75	71	295	264	57	NA
B - 4		20.0	534.000	0.87	0.91	0.91	2	76	72	294	264	52	NA
B - 3		22.5	535.330	0.86	0.90	0.90	2	76	72	293	263	49	NA
B - 2		25.0	536.610	0.84	0.88	0.88	2	76	72	293	263	48	NA
B - 1		27.5	537.890	0.82	0.86	0.86	2	76	72	294	263	47	NA
A - 12	958/	30.0	539.145	1.20	1.26	1.26	2	75	72	292	265	58	NA
A - 11	1002	32.5	540.665	1.20	1.26	1.26	2	75	73	294	265	49	NA
A - 10		35.0	542.190	1.25	1.31	1.31	2	77	74	295	264	48	NA
A - 9		37.5	543.770	1.00	1.05	1.05	2	77	74	295	264	48	NA
A - 8		40.0	545.125	0.98	1.03	1.03	2	78	74	294	263	48	NA
A - 7		42.5	546.530	0.94	0.99	0.99	2	78	74	294	263	48	NA
A - 6		45.0	547.920	0.89	0.93	0.93	2	78	74	295	263	49	NA
A - 5		47.5	549.240	0.87	0.91	0.91	2	78	74	296	264	49	NA
A - 4		50.0	550.550	0.85	0.89	0.89	2	78	74	294	263	50	NA
A - 3		52.5	551.850	0.82	0.86	0.86	2	78	74	294	263	50	NA
A - 2		55.0	553.140	0.80	0.84	0.84	2	78	74	295	263	51	NA
A - 1		57.5	554.410	0.78	0.82	0.82	2	78	74	295	262	50	NA
-	1032	60.0	555.710										
-													
-													
-													
-													
-													
						MAX =>	3						
Average Values		60.0	33.300	0.973	1.03	1.03		74		294			

ISOKINETIC SAMPLING TRAIN DATASHEET - METHOD M316

Client Name	Covanta Energy Group, Inc.	Run #	3-O-M316-2		
Plant Name	Huntington Resource Recovery Facility	Project #	13022	Run Start	1154
Plant City, State	East Northport, NY	Personnel	EMK	Run End	1258
Test Location	Unit 3 FF Outlet	Tester Signature			
Date of Test	8/29/13	Checked By			

Isokinetic Factor Setup		Pressures		Sampling Equipment			Filter ID & Tares		Actuals
ΔH @ 0.75 SCFM	1.812	Pbar	29.9	Meter Console #		T5			CO_2
Meter Calibration Factor	1.0150	Pstatic	-16.00	Ideal Nozzle Diameter		0.244			8.8
Pitot Tube Coefficient	0.84	Tstd, °F	68	Nozzle #		GN477			O_2
Estimated DGM Temp	75	Pstd	29.92	Actual Nozzle Diameter		0.211	XAD ID & Tares		10.9
Estimated Stack Temp or M2 Avg.	285	Diluent		Probe Lgth/ID #	6'	158			CO
Estimated Delta P or M2 Avg.	1.00	Estimates		Liner Material		BG	Y_{qa}		0.0
Estimated Moisture Content	19.0	CO_2	8.5	Filter Box #		HB3	1.0104		N_2
Estimated Dry Molecular Weight	29.80	O_2	11.0	Cold Box ID #		CB17	0.45%		80.3
Estimated Velocity, ft/sec	69.7	CO	0.0	Umbilical ID #		U50-9	PASS		H_2O
K Factor (delta H/delta P)	1.05	N_2	80.5	TC ID #s		158			166.7

Equipment Checks		PRE	POST	Leak Checks	1	2	3	4	5	6	Status
Tambient		75	77	DGM initial							0.000
Thermocouples		Y	Y	Vacuum	15	10					15
Pitots		Y	Y	Leak Rate	0.000	0.000					OK
Tedlar Bag	OB8	Y	Y	DGM final							0.000

Point #	Clock Time	Test Time	Dry Gas Meter Reading	Velocity Head	Desired Orifice ΔH	Actual Orifice ΔH	Pump Vac.	DGM Inlet Temp	DGM Outlet Temp	Stack Temp	Filter Temp	Imp. Exit Temp	Cond. Exit Temp
	24 hr	min	ft^3	in H_2O	in H_2O	in H_2O	in Hg	°F	°F	°F	°F	°F	°F
B - 12	1154	0.0	556.000	1.35	1.42	1.42	3	74	74	292	264	66	NA
B - 11		2.5	557.680	1.40	1.47	1.47	3	75	74	294	263	60	NA
B - 10		5.0	559.320	1.20	1.26	1.26	3	75	74	293	263	57	NA
B - 9		7.5	560.775	1.00	1.05	1.05	3	75	74	293	263	57	NA
B - 8		10.0	562.210	0.98	1.03	1.03	3	76	74	295	264	57	NA
B - 7		12.5	563.610	0.94	0.99	0.99	3	76	74	295	264	58	NA
B - 6		15.0	564.990	0.92	0.97	0.97	3	77	73	295	264	50	NA
B - 5		17.5	566.340	0.93	0.98	0.98	3	77	75	295	264	50	NA
B - 4		20.0	567.700	0.88	0.92	0.92	3	77	75	295	263	49	NA
B - 3		22.5	569.000	0.87	0.91	0.91	3	77	75	296	263	49	NA
B - 2		25.0	570.380	0.83	0.87	0.87	3	78	75	294	264	49	NA
B - 1		27.5	571.630	0.82	0.86	0.86	3	79	75	295	265	49	NA
A - 12	1224/	30.0	572.890	1.25	1.31	1.31	3	76	76	293	260	60	NA
A - 11	1228	32.5	574.490	1.25	1.31	1.31	3	79	76	296	264	48	NA
A - 10		35.0	575.960	1.10	1.16	1.16	3	80	76	295	266	47	NA
A - 9		37.5	577.375	1.15	1.21	1.21	3	80	76	295	264	48	NA
A - 8		40.0	578.870	1.10	1.16	1.16	3	80	76	296	265	48	NA
A - 7		42.5	580.380	0.97	1.02	1.02	3	81	77	294	264	48	NA
A - 6		45.0	581.830	0.96	1.01	1.01	3	81	77	293	263	49	NA
A - 5		47.5	583.200	0.94	0.99	0.99	3	81	77	294	264	49	NA
A - 4		50.0	584.530	0.92	0.97	0.97	3	81	77	294	264	49	NA
A - 3		52.5	585.790	0.87	0.91	0.91	3	81	77	294	263	50	NA
A - 2		55.0	587.160	0.84	0.88	0.88	3	81	77	294	263	50	NA
A - 1		57.5	588.510	0.82	0.86	0.86	3	81	77	295	264	51	NA
-	1258	60.0	589.780										
-													
-													
-													
-													
-													
						MAX =>	3						
Average Values		60.0	33.780	1.005	1.06	1.06		77		294			

ISOKINETIC SAMPLING TRAIN DATASHEET - METHOD M316

Client Name	Covanta Energy Group, Inc.	Run #	3-O-M316-3		
Plant Name	Huntington Resource Recovery Facility	Project #	13022	Run Start	1416
Plant City, State	East Northport, NY	Personnel	EMK	Run End	1519
Test Location	Unit 3 FF Outlet	Tester Signature			
Date of Test	8/29/13	Checked By			

Isokinetic Factor Setup		Pressures		Sampling Equipment			Filter ID & Tares		Actuals
ΔH @ 0.75 SCFM	1.812	Pbar	29.9	Meter Console #		T5			CO_2
Meter Calibration Factor	1.0150	Pstatic	-16.00	Ideal Nozzle Diameter		0.244			8.7
Pitot Tube Coefficient	0.84	Tstd, °F	68	Nozzle #		GN477			O_2
Estimated DGM Temp	75	Pstd	29.92	Actual Nozzle Diameter		0.211	XAD ID & Tares		11.1
Estimated Stack Temp or M2 Avg.	285	Diluent		Probe Lgth/ID #	6'	158			CO
Estimated Delta P or M2 Avg.	1.00	Estimates		Liner Material		BG	Y_{qa}		0.0
Estimated Moisture Content	19.0	CO_2	8.5	Filter Box #		HB3	1.0009		N_2
Estimated Dry Molecular Weight	29.80	O_2	11.0	Cold Box ID #		CB17	1.38%		80.2
Estimated Velocity, ft/sec	69.7	CO	0.0	Umbilical ID #		U50-9	PASS		H_2O
K Factor (delta H/delta P)	1.05	N_2	80.5	TC ID #s		158			157.3

Equipment Checks		PRE	POST	Leak Checks	1	2	3	4	5	6	Status
Tambient		78	78	DGM initial							0.000
Thermocouples		Y	Y	Vacuum	15	5					15
Pitots		Y	Y	Leak Rate	0.000	0.000					OK
Tedlar Bag	OB6	Y	Y	DGM final							0.000

Point #	Clock Time	Test Time	Dry Gas Meter Reading	Velocity Head	Desired Orifice ΔH	Actual Orifice ΔH	Pump Vac.	DGM Inlet Temp	DGM Outlet Temp	Stack Temp	Filter Temp	Imp. Exit Temp	Cond. Exit Temp
	24 hr	min	ft^3	in H_2O	in H_2O	in H_2O	in Hg	°F	°F	°F	°F	°F	°F
B - 12	1416	0.0	590.585	1.10	1.16	1.16	3	77	77	292	263	63	NA
B - 11		2.5	592.020	1.05	1.10	1.10	3	77	77	293	263	60	NA
B - 10		5.0	593.460	0.98	1.03	1.03	3	77	76	293	263	59	NA
B - 9		7.5	594.870	0.98	1.03	1.03	3	78	77	293	263	52	NA
B - 8		10.0	596.260	0.97	1.02	1.02	3	78	77	293	263	50	NA
B - 7		12.5	597.650	1.00	1.05	1.05	3	78	77	295	263	49	NA
B - 6		15.0	599.040	0.97	1.02	1.02	3	79	77	295	264	49	NA
B - 5		17.5	600.410	0.95	1.00	1.00	3	79	77	295	263	49	NA
B - 4		20.0	601.760	0.91	0.96	0.96	3	80	77	295	264	49	NA
B - 3		22.5	603.120	0.88	0.92	0.92	3	80	77	294	264	49	NA
B - 2		25.0	604.460	0.86	0.90	0.90	3	80	77	293	265	49	NA
B - 1		27.5	605.840	0.83	0.87	0.87	3	81	78	294	264	49	NA
A - 12	1446/	30.0	607.120	1.10	1.16	1.16	3	80	78	296	265	58	NA
A - 11	1449	32.5	608.550	1.15	1.21	1.21	3	81	78	293	264	50	NA
A - 10		35.0	610.060	1.10	1.16	1.16	3	82	78	293	264	50	NA
A - 9		37.5	611.530	1.00	1.05	1.05	3	82	78	295	264	50	NA
A - 8		40.0	613.000	0.99	1.04	1.04	3	82	79	294	264	50	NA
A - 7		42.5	614.385	0.93	0.98	0.98	3	82	79	293	264	51	NA
A - 6		45.0	615.740	0.90	0.95	0.95	3	83	79	294	264	51	NA
A - 5		47.5	617.120	0.88	0.92	0.92	3	83	79	294	266	51	NA
A - 4		50.0	618.485	0.86	0.90	0.90	3	83	79	294	264	51	NA
A - 3		52.5	619.790	0.82	0.86	0.86	3	83	79	294	264	51	NA
A - 2		55.0	621.120	0.80	0.84	0.84	3	83	79	294	265	51	NA
A - 1		57.5	622.430	0.78	0.82	0.82	3	84	79	293	264	51	NA
-	1519	60.0	623.760										
-													
-													
-													
-													
-													
						MAX =>	3						
Average Values		60.0	33.175	0.947	1.00	1.00		79		294			

EPA Method 3 for Molecular Weight Determination

Client Name	Covanta Energy Group, Inc.	Project #	13022
Plant Name	Huntington Resource Recovery Facility	Fuel Type	MSW
Plant City, State	East Northport, NY	Fo Min	
Test Location	Unit 3 FF Outlet	Fo Max	

Date	8/29/13	Run Number	3-O-M8-1		ORSAT ID	2	Leak Ck?
Shared With			Start Time	0815	Stop Time	0922	Y
Sample Analysis Time	Carbon Dioxide Concentra.	Oxygen Concentra.	Oxygen Concentra. by difference	CO & Nitrogen Concentra.	Carbon Dioxide Difference	Oxygen Difference	Operator DGB Bag #
	($\%CO_2$)	reading	($\%O_2$)	($\%CO+N_2$)	(M_d)	(ΔM_d)	OB4
hh:mm	reading	reading	reading	percent	lb/lb-mole	lb/lb-mole	Fyrite #s
948	8.6	19.7	11.1	80.3	0.1	0.0	
955	8.7	19.8	11.1	80.2	0.1	0.0	Fo
1002	8.6	19.7	11.1	80.3	0.0	0.0	
Averages	8.6		11.1	80.3	OK	OK	

Date	8/29/13	Run Number	3-O-M8-2		ORSAT ID	2	Leak Ck?
Shared With			Start Time	1042	Stop Time	1147	Y
Sample Analysis Time	Carbon Dioxide Concentra.	Oxygen Concentra.	Oxygen Concentra. by difference	CO & Nitrogen Concentra.	Carbon Dioxide Difference	Oxygen Difference	Operator DGB Bag #
	($\%CO_2$)	reading	($\%O_2$)	($\%CO+N_2$)	(M_d)	(ΔM_d)	OB4
hh:mm	reading	reading	reading	percent	lb/lb-mole	lb/lb-mole	Fyrite #s
1212	8.6	19.7	11.1	80.3	0.1	0.0	
1219	8.7	19.8	11.1	80.2	0.0	0.1	Fo
1226	8.7	19.7	11.0	80.3	0.1	0.1	
Averages	8.7		11.1	80.2	OK	OK	

Date	8/29/13	Run Number	3-O-M8-3		ORSAT ID	2	Leak Ck?
Shared With			Start Time	1307	Stop Time	1412	Y
Sample Analysis Time	Carbon Dioxide Concentra.	Oxygen Concentra.	Oxygen Concentra. by difference	CO & Nitrogen Concentra.	Carbon Dioxide Difference	Oxygen Difference	Operator DGB Bag #
	($\%CO_2$)	reading	($\%O_2$)	($\%CO+N_2$)	(M_d)	(ΔM_d)	OB5
hh:mm	reading	reading	reading	percent	lb/lb-mole	lb/lb-mole	Fyrite #s
1435	8.9	19.8	10.9	80.2	0.0	0.0	
1442	8.9	19.8	10.9	80.2	0.1	0.0	Fo
1449	8.8	19.7	10.9	80.3	0.1	0.0	
Averages	8.9		10.9	80.2	OK	OK	

Date	8/29/13	Run Number			ORSAT ID	2	Leak Ck?
Shared With			Start Time		Stop Time		Y
Sample Analysis Time	Carbon Dioxide Concentra.	Oxygen Concentra.	Oxygen Concentra. by difference	CO & Nitrogen Concentra.	Carbon Dioxide Difference	Oxygen Difference	Operator DGB Bag #
	($\%CO_2$)	reading	($\%O_2$)	($\%CO+N_2$)	(M_d)	(ΔM_d)	
hh:mm	reading	reading	reading	percent	lb/lb-mole	lb/lb-mole	Fyrite #s
			0.0	100.0			
			0.0	100.0			Fo
			0.0	100.0			
Averages	#DIV/0!		0.0	#DIV/0!			

Signature:	D. H. Birth	Checked by:	

EPA Method 4 for Percent Moisture Determination

Client Name	Covanta Energy Group, Inc.	**Project #**	13022
Plant Name	Huntington Resource Rec Fac	**Balance Type**	Electronic
Plant City, State	East Northport, NY	**Balance ID**	EB1
Sampling Location	Unit 3 FF Outlet	**Operator Name**	Blake Cone

Run Number	3-O-M8-1	3-O-M8-2	3-O-M8-3	
Test Date	8/29/13	8/29/13	8/29/13	
Reagent Box ID				

Impinger Reagent	IPA	mL	mL	mL	mL
Final Catch Weight	grams	457.3	419.3	444.5	
Initial Tare Weight	grams	324.5	324.4	324.3	
Net Moisture Caught	grams	132.8	94.9	120.2	0.0

Impinger Reagent	H2O2	mL	mL	mL	mL
Final Catch Weight	grams	494.2	478.3	485.8	
Initial Tare Weight	grams	444.0	442.0	442.8	
Net Moisture Caught	grams	50.2	36.3	43.0	0.0

Impinger Reagent		mL	mL	mL	mL
Final Catch Weight	grams				
KMNo4 Weight	grams				
KMnO4 g/mL	1.1				
Initial Jar Tare Weight	grams				
Net Moisture Caught	grams	0.0	0.0	0.0	0.0

Silica Gel	SG	grams	grams	grams	grams
Final Catch Weight	grams	277.6	289.2	299.2	
Initial Tare Weight	grams	259.9	277.6	289.2	
Net Moisture Caught	grams	17.7	11.6	10.0	0.0

Total Catch	grams	200.7	142.8	173.2	0.0

Signature:			**Checked By:**	David H. Brittle

ISOKINETIC SAMPLING TRAIN DATASHEET - METHOD M8

Client Name	Covanta Energy Group, Inc.	Run #	3-O-M8-1		
Plant Name	Huntington Resource Recovery Facility	Project #	13022	Run Start	815
Plant City, State	East Northport, NY	Personnel	EMK	Run End	922
Test Location	Unit 3 FF Outlet	Tester Signature			
Date of Test	08/29/13	Checked By			

Isokinetic Factor Setup		Pressures		Sampling Equipment			Filter ID & Tares	Actuals
ΔH @ 0.75 SCFM	1.630	Pbar	29.9	Meter Console #		T4		CO_2
Meter Calibration Factor	1.0077	Pstatic	-16.00	Ideal Nozzle Diameter		0.244		8.6
Pitot Tube Coefficient	0.84	Tstd, °F	68	Nozzle #		GN480		O_2
Estimated DGM Temp	75	Pstd	29.92	Actual Nozzle Diameter		0.214	XAD ID & Tares	11.1
Estimated Stack Temp or M2 Avg.	285	Diluent		Probe Lgth/ID #	6'	160		CO
Estimated Delta P or M2 Avg.	1.00	Estimates		Liner Material		BG	Y_{qa}	0.0
Estimated Moisture Content	19.0	CO_2	8.5	Filter Box #		HB2	0.9874	N_2
Estimated Dry Molecular Weight	29.80	O_2	11.0	Cold Box ID #		CB9	2.01%	80.3
Estimated Velocity, ft/sec	69.7	CO	0.0	Umbilical ID #		U50-7	PASS	H_20
K Factor (delta H/delta P)	1.00	N_2	80.5	TC ID #s		160		200.7

Equipment Checks		PRE	POST	Leak Checks	1	2	3	4	5	6	Status
Tambient		67	70	DGM initial							0.000
Thermocouples		Y	Y	Vacuum	15	10					15
Pitots		Y	Y	Leak Rate	0.000	0.000					OK
Tedlar Bag	OB4	Y	Y	DGM final							0.000

Point #	Clock Time	Test Time	Dry Gas Meter Reading	Velocity Head	Desired Orifice ΔH	Actual Orifice ΔH	Pump Vac.	DGM Inlet Temp	DGM Outlet Temp	Stack Temp	Filter Temp	Imp. Exit Temp	Cond. Exit Temp
	24 hr	min	ft^3	in H_2O	in H_2O	in H_2O	in Hg	°F	°F	°F	°F	°F	°F
A - 12	815	0.0	816.215	1.10	1.10	1.10	7	71	70	285	263	65	NA
A - 11		2.5	817.810	1.05	1.05	1.05	7	71	70	287	265	55	NA
A - 10		5.0	819.275	1.05	1.05	1.05	7	71	70	295	265	55	NA
A - 9		7.5	820.740	1.10	1.10	1.10	7	71	70	295	265	54	NA
A - 8		10.0	822.255	0.99	0.99	0.99	7	72	70	293	265	55	NA
A - 7		12.5	823.760	0.95	0.95	0.95	7	72	70	292	266	56	NA
A - 6		15.0	825.210	0.92	0.92	0.92	7	74	70	294	265	58	NA
A - 5		17.5	826.610	0.88	0.88	0.88	7	74	70	294	265	58	NA
A - 4		20.0	828.015	0.84	0.84	0.84	7	73	70	294	265	60	NA
A - 3		22.5	829.400	0.79	0.79	0.79	6	74	70	293	265	60	NA
A - 2		25.0	830.715	0.76	0.76	0.76	6	74	71	294	265	60	NA
A - 1		27.5	832.015	0.77	0.77	0.77	6	74	71	292	265	60	NA
B - 12	845/	30.0	833.270	1.25	1.25	1.25	7	74	71	292	265	63	NA
B - 11	852	32.5	834.910	1.20	1.20	1.20	7	75	71	294	264	61	NA
B - 10		35.0	836.480	1.15	1.15	1.15	7	75	71	294	264	60	NA
B - 9		37.5	838.080	1.10	1.10	1.10	7	75	71	295	264	60	NA
B - 8		40.0	839.610	1.05	1.05	1.05	7	76	71	293	261	60	NA
B - 7		42.5	841.110	1.00	1.00	1.00	7	76	72	293	262	61	NA
B - 6		45.0	842.600	1.05	1.05	1.05	7	77	71	295	261	62	NA
B - 5		47.5	844.075	0.97	0.97	0.97	7	77	71	295	261	62	NA
B - 4		50.0	845.530	0.92	0.92	0.92	7	77	72	294	262	63	NA
B - 3		52.5	846.930	0.87	0.87	0.87	7	77	72	293	265	63	NA
B - 2		55.0	848.325	0.86	0.86	0.86	7	77	72	292	264	63	NA
B - 1		57.5	849.680	0.82	0.82	0.82	7	77	72	294	264	65	NA
-	922	60.0	851.055										
-													
-													
-													
-													
-													
						MAX =>	7						
Average Values		60.0	34.840	0.972	0.98	0.98		73		293			

ISOKINETIC SAMPLING TRAIN DATASHEET - METHOD M8

Client Name	Covanta Energy Group, Inc.	Run #	3-O-M8-2		
Plant Name	Huntington Resource Recovery Facility	Project #	13022	Run Start	1042
Plant City, State	East Northport, NY	Personnel	EMK	Run End	1147
Test Location	Unit 3 FF Outlet	Tester Signature			
Date of Test	8/29/13	Checked By			

Isokinetic Factor Setup		Pressures		Sampling Equipment		Filter ID & Tares		Actuals
ΔH @ 0.75 SCFM	1.630	Pbar	29.9	Meter Console #	T4			CO_2
Meter Calibration Factor	1.0077	Pstatic	-16.00	Ideal Nozzle Diameter	0.244			8.7
Pitot Tube Coefficient	0.84	Tstd, °F	68	Nozzle #	GN485			O_2
Estimated DGM Temp	75	Pstd	29.92	Actual Nozzle Diameter	0.210	XAD ID & Tares		11.1
Estimated Stack Temp or M2 Avg.	285	Diluent Estimates		Probe Lgth/ID # 6'	160			CO
Estimated Delta P or M2 Avg.	1.00			Liner Material	BG	Y_{qa}		0.0
Estimated Moisture Content	19.0	CO_2	8.5	Filter Box #	HB2	0.9935		N_2
Estimated Dry Molecular Weight	29.80	O_2	11.0	Cold Box ID #	CB9	1.40%		80.2
Estimated Velocity, ft/sec	69.7	CO	0.0	Umbilical ID #	U50-7	PASS		H_2O
K Factor (delta H/delta P)	0.93	N_2	80.5	TC ID #s	160			142.8

Equipment Checks		PRE	POST	Leak Checks	1	2	3	4	5	6	Status
Tambient		75	75	DGM initial							0.000
Thermocouples		Y	Y	Vacuum	15	10					15
Pitots		Y	Y	Leak Rate	0.000	0.000					OK
Tedlar Bag	OB4	Y	Y	DGM final							0.000

Point #	Clock Time	Test Time	Dry Gas Meter Reading	Velocity Head	Desired Orifice ΔH	Actual Orifice ΔH	Pump Vac.	DGM Inlet Temp	DGM Outlet Temp	Stack Temp	Filter Temp	Imp. Exit Temp	Cond. Exit Temp
	24 hr	min	ft^3	in H_2O	in H_2O	in H_2O	in Hg	°F	°F	°F	°F	°F	°F
A - 12	1042	0.0	851.780	1.20	1.11	1.11	7	74	73	292	261	67	NA
A - 11		2.5	853.330	1.30	1.21	1.21	7	75	74	292	263	61	NA
A - 10		5.0	854.890	1.25	1.16	1.16	7	75	74	292	263	55	NA
A - 9		7.5	856.420	1.05	0.97	0.97	7	76	73	293	265	53	NA
A - 8		10.0	857.890	1.00	0.93	0.93	7	76	73	293	264	52	NA
A - 7		12.5	859.310	0.98	0.91	0.91	7	78	74	293	264	52	NA
A - 6		15.0	860.710	0.93	0.86	0.86	6	78	74	293	263	53	NA
A - 5		17.5	862.020	0.93	0.86	0.86	6	78	74	294	265	53	NA
A - 4		20.0	863.370	0.90	0.83	0.83	6	79	74	294	263	53	NA
A - 3		22.5	864.710	0.88	0.82	0.82	6	79	75	294	263	53	NA
A - 2		25.0	866.080	0.86	0.80	0.80	6	79	75	293	263	54	NA
A - 1		27.5	867.430	0.82	0.76	0.76	6	80	75	294	265	54	NA
B - 12	1112/	30.0	868.645	1.10	1.02	1.02	6	77	76	291	259	65	NA
B - 11	1117	32.5	870.110	1.15	1.07	1.07	6	80	76	293	265	52	NA
B - 10		35.0	871.730	1.10	1.02	1.02	6	80	76	293	265	52	NA
B - 9		37.5	873.180	1.05	0.97	0.97	6	80	76	294	265	52	NA
B - 8		40.0	874.650	1.00	0.93	0.93	6	81	76	297	266	52	NA
B - 7		42.5	876.140	0.97	0.90	0.90	6	81	77	295	265	52	NA
B - 6		45.0	877.550	0.93	0.86	0.86	6	81	77	290	264	53	NA
B - 5		47.5	878.930	0.90	0.83	0.83	6	81	77	291	263	53	NA
B - 4		50.0	880.275	0.88	0.82	0.82	6	81	77	291	264	53	NA
B - 3		52.5	881.610	0.87	0.81	0.81	6	81	77	290	263	53	NA
B - 2		55.0	882.920	0.84	0.78	0.78	6	81	77	293	265	54	NA
B - 1		57.5	884.150	0.80	0.74	0.74	6	81	77	293	265	54	NA
-	1147	60.0	885.440										
-													
-													
-													
-													
-													
						MAX =>	7						
Average Values		60.0	33.660	0.983	0.92	0.92		77		293			

ISOKINETIC SAMPLING TRAIN DATASHEET - METHOD M8

Client Name	Covanta Energy Group, Inc.	Run #	3-O-M8-3		
Plant Name	Huntington Resource Recovery Facility	Project #	13022	Run Start	1307
Plant City, State	East Northport, NY	Personnel	EMK	Run End	1412
Test Location	Unit 3 FF Outlet	Tester Signature			
Date of Test	8/29/13	Checked By			

Isokinetic Factor Setup		Pressures		Sampling Equipment		Filter ID & Tares		Actuals
ΔH @ 0.75 SCFM	1.630	Pbar	29.9	Meter Console #	T4			CO_2
Meter Calibration Factor	1.0077	Pstatic	-16.00	Ideal Nozzle Diameter	0.244			8.9
Pitot Tube Coefficient	0.84	Tstd, °F	68	Nozzle #	GN485			O_2
Estimated DGM Temp	75	Pstd	29.92	Actual Nozzle Diameter	0.210	XAD ID & Tares		10.9
Estimated Stack Temp or M2 Avg.	285	Diluent		Probe Lgth/ID # 6'	160			CO
Estimated Delta P or M2 Avg.	1.00	Estimates		Liner Material	BG	Y_{qa}		0.0
Estimated Moisture Content	19.0	CO_2	8.5	Filter Box #	HB2	0.9879		N_2
Estimated Dry Molecular Weight	29.80	O_2	11.0	Cold Box ID #	CB9	1.97%		80.2
Estimated Velocity, ft/sec	69.7	CO	0.0	Umbilical ID #	U50-7	PASS		H_2O
K Factor (delta H/delta P)	0.93	N_2	80.5	TC ID #s	160			173.2

Equipment Checks		PRE	POST	Leak Checks	1	2	3	4	5	6	Status
Tambient		77	77	DGM initial							0.000
Thermocouples		Y	Y	Vacuum	15	10					15
Pitots		Y	Y	Leak Rate	0.000	0.000					OK
Tedlar Bag	OB5	Y	Y	DGM final							0.000

Point #	Clock Time	Test Time	Dry Gas Meter Reading	Velocity Head	Desired Orifice ΔH	Actual Orifice ΔH	Pump Vac.	DGM Inlet Temp	DGM Outlet Temp	Stack Temp	Filter Temp	Imp. Exit Temp	Cond. Exit Temp
	24 hr	min	ft^3	in H_2O	in H_2O	in H_2O	in Hg	°F	°F	°F	°F	°F	°F
A - 12	1307	0.0	885.960	1.40	1.30	1.30	7	77	76	293	266	65	NA
A - 11		2.5	887.680	1.35	1.25	1.25	7	78	76	291	260	65	NA
A - 10		5.0	889.270	1.30	1.21	1.21	7	79	73	294	260	61	NA
A - 9		7.5	890.800	1.10	1.02	1.02	7	79	77	295	260	59	NA
A - 8		10.0	892.350	1.00	0.93	0.93	7	80	77	293	263	58	NA
A - 7		12.5	893.810	1.05	0.97	0.97	7	80	77	292	260	57	NA
A - 6		15.0	895.270	1.00	0.93	0.93	7	80	77	294	261	57	NA
A - 5		17.5	896.710	0.96	0.89	0.89	7	81	77	296	263	58	NA
A - 4		20.0	898.100	0.92	0.85	0.85	7	81	77	295	263	57	NA
A - 3		22.5	899.470	0.88	0.82	0.82	7	81	77	294	261	57	NA
A - 2		25.0	900.775	0.85	0.79	0.79	7	81	77	293	263	57	NA
A - 1		27.5	902.100	0.80	0.74	0.74	7	81	77	293	262	57	NA
B - 12	1337/	30.0	903.370	1.15	1.07	1.07	7	79	77	293	259	65	NA
B - 11		32.5	904.890	1.05	0.97	0.97	7	81	77	294	260	56	NA
B - 10		35.0	906.380	1.00	0.93	0.93	7	81	77	294	261	56	NA
B - 9		37.5	907.810	0.99	0.92	0.92	7	81	77	295	261	56	NA
B - 8		40.0	909.250	0.96	0.89	0.89	7	82	78	295	261	56	NA
B - 7		42.5	910.670	0.92	0.85	0.85	7	83	78	293	262	57	NA
B - 6		45.0	912.040	0.89	0.83	0.83	7	83	78	293	263	57	NA
B - 5		47.5	913.410	0.85	0.79	0.79	7	83	78	291	262	57	NA
B - 4		50.0	914.680	0.79	0.73	0.73	7	84	79	291	263	57	NA
B - 3		52.5	915.985	0.78	0.72	0.72	7	84	79	291	263	57	NA
B - 2		55.0	917.250	0.76	0.70	0.70	7	83	78	293	262	57	NA
B - 1		57.5	918.440	0.74	0.69	0.69	7	83	79	293	262	57	NA
-	1412	60.0	919.670										
-													
-													
-													
-													
-													
						MAX =>	7						
Average Values		60.0	33.710	0.971	0.91	0.91		79		293			

APPENDIX E

Reference Method Calibration Data

NOx Converter Efficiency Test

Client Name: Covanta Energy Group, Inc.
Facility Name: Huntington Resource Recovery Facility
Location: Unit 1 FF Outlet
Analyzer: TECO 10S
Analyzer SN#: 10S-45501-274
Operator: PJJ

	Pre-Test		Post-Test	
Date:	08/27/13		08/29/13	
NO2/NO Converter Efficiency Gas:	50.60	ppm NO2	50.60	ppm NO2
NOx Analyzer Response:	46.9	ppm NO2	47.7	ppm NO2
Converter Efficiency:	92.7	%	94.3	%

EPA EMTIC Guidline Document GD-030 requires NO2 to NO conversion must be >90%.

TESTAR Engineering, PC
7424-108 ACC Blvd.
Raleigh, NC 27617
919-957-9500

Interference Test

Analyzer Type:	Servomex 1420 O2	Parameter:	O2
Serial Number:	1420/B175	Operator:	WES
Span:	10.03	Date:	12-Sep-12

Parameter	Concentration		Analyzer Response	% of Span
O2/N2		%		0.00
CO2/N2		%		0.00
SO2/N2	245.60	ppm	0.000	0.00
NOx/N2	244.60	ppm	0.100	1.00
CO/N2	45.01	ppm	0.100	1.00
			Totals	1.99

Specification: Sum of Interference Responses Must Not Exceed 2.50% of Span

Interference Test

Analyzer Type:	Servomex 1420 O2	Parameter:	O2
Serial Number:	1420/B180	Operator:	WES
Span:	10.03	Date:	12-Sep-12

Parameter	Concentration		Analyzer Response	% of Span
O2/N2		%		0.00
CO2/N2		%		0.00
SO2/N2	244.60	ppm	0.000	0.00
NOx/N2	48.96	ppm	0.000	0.00
CO/N2	45.01	ppm	0.000	0.00
			Totals	0.00

Specification: Sum of Interference Responses Must Not Exceed 2.50% of Span

Interference Test

Analyzer Type:	TELEDYNE API 300EM	Parameter:	CO2
Serial Number:	224	Operator:	WES
Span:	9.011	Date:	12-Sep-12

Parameter	Concentration		Analyzer Response	% of Span
O2/N2		%		0.00
CO2/N2		%		0.00
SO2/N2	245.60	ppm	0.000	0.00
NOx/N2	244.60	ppm	0.001	0.01
CO/N2	45.01	ppm	0.000	0.00
			Totals	0.01

Specification: Sum of Interference Responses Must Not Exceed 2.50% of Span

Interference Test

Analyzer Type:	CALIF ANALYTICAL ZRH	Parameter:	CO2
Serial Number:	ZRH1BEY2-6BAYY	Operator:	WES
Span:	9.011	Date:	12-Sep-12

Parameter	Concentration		Analyzer Response	% of Span
O2/N2		%		0.00
CO2/N2		%		0.00
SO2/N2	48.96	ppm	0.020	0.22
NOx/N2	244.60	ppm	0.040	0.44
CO/N2	45.01	ppm	0.030	0.33
			Totals	1.00

Specification: Sum of Interference Responses Must Not Exceed 2.50% of Span

Interference Test

Analyzer Type:	Western Research	Parameter:	SO2
Serial Number:	89-721AT2-7587-2	Operator:	WES
Span:	245.6	Date:	12-Sep-12

Parameter	Concentration		Analyzer Response	% of Span
O2/N2	10.03	%	0.000	0.00
CO2/N2	9.01	%	0.000	0.00
SO2/N2		ppm		0.00
NOx/N2	244.60	ppm	0.000	0.00
CO/N2	45.01	ppm	0.000	0.00
			Totals	0.00

Specification: Sum of Interference Responses Must Not Exceed 2.50% of Span

Interference Test

Analyzer Type:	Western Research	Parameter:	SO2
Serial Number:	89-721AT2-7587-3	Operator:	WES
Span:	48.96	Date:	12-Sep-12

Parameter	Concentration		Analyzer Response	% of Span
O2/N2	10.03	%	0.000	0.00
CO2/N2	9.01	%	0.000	0.00
SO2/N2		ppm		0.00
NOx/N2	244.60	ppm	0.000	0.00
CO/N2	45.01	ppm	0.000	0.00
			Totals	0.00

Specification: Sum of Interference Responses Must Not Exceed 2.50% of Span

Interference Test

Analyzer Type:	TECO 10S	Parameter:	NOx
Serial Number:	10S-45501-274	Operator:	WES
Span:	500	Date:	12-Sep-12

Parameter	Concentration		Analyzer Response	% of Span
O2/N2	19.99	%	0.000	0.00
CO2/N2	17.35	%	0.000	0.00
SO2/N2	956.8	ppm	0.000	0.00
NOx/N2		ppm		0.00
CO/N2	891.0	ppm	0.000	0.00
			Totals	0.00

Specification: Sum of Interference Responses Must Not Exceed 2.50% of Span

Interference Test

Analyzer Type:	TELEDYNE API 300EM	Parameter:	CO
Serial Number:	224	Operator:	WES
Span:	45.01	Date:	12-Sep-12

Parameter	Concentration		Analyzer Response	% of Span
O2/N2	10.03	%	-0.285	0.63
CO2/N2	9.01	%	-0.285	0.63
SO2/N2	245.60	ppm	0.030	0.07
NOx/N2	244.60	ppm	-0.123	0.27
CO/N2		ppm		0.00
			Totals	1.61

Specification: Sum of Interference Responses Must Not Exceed 2.50% of Span

Airgas

Airgas Specialty Gases
630 United Drive
Durham, NC 27713
919-544-3773 Fax: 919-544-3774
www.airgas.com

CERTIFICATE OF ANALYSIS
Grade of Product: EPA Protocol

Part Number:	E03NI81E15A37P2	Reference Number:	122-124343037-9
Cylinder Number:	CC421867	Cylinder Volume:	150 Cu.Ft.
Laboratory:	ASG - Durham - NC	Cylinder Pressure:	2015 PSIG
PGVP Number:	B22012	Valve Outlet:	590
Gas Code:	OC2	Analysis Date:	Oct 30, 2012

Expiration Date: Oct 30, 2020

Certification performed in accordance with "EPA Traceability Protocol for Assay and Certification of Gaseous Calibration Standards (May 2012)" document EPA 600/R-12/531, using the assay procedures listed. Analytical Methodology does not require correction for analytical interference. This cylinder has a total analytical uncertainty as stated below with a confidence level of 95%. There are no significant impurities which affect the use of this calibration mixture. All concentrations are on a volume/volume basis unless otherwise noted.
Do Not Use This Cylinder below 100 psig, i.e. 0.7 megapascals.

ANALYTICAL RESULTS

Component	Requested Concentration	Actual Concentration	Protocol Method	Total Relative Uncertainty
CARBON DIOXIDE	9.000 %	9.094 %	G1	+/- 1% NIST Traceable
OXYGEN	10.00 %	10.07 %	G1	+/- 1% NIST Traceable
NITROGEN	Balance			

CALIBRATION STANDARDS

Type	Lot ID	Cylinder No	Concentration	Expiration Date
090606	090606	CC262103	9.921% CARBON DIOXIDE/NITROGEN	Apr 10, 2013
NTRM	82658	SG9163064BAL	9.507% OXYGEN/NITROGEN	Dec 01, 2015

ANALYTICAL EQUIPMENT

Instrument/Make/Model	Analytical Principle	Last Multipoint Calibration
Horiba VIA510 CO2 42399380022	Nondispersive Infrared (NDIR)	Oct 19, 2012
Horiba MPA510 O2 41499150042	Paramagnetic	Oct 18, 2012

Triad Data Available Upon Request

Notes:ANW Part #781221

Approved for Release

Airgas

Airgas Specialty Gases
630 United Drive
Durham, NC 27713
(919)544-3773 Fax: (919)544-3774
www.airgas.com

CERTIFICATE OF ANALYSIS
Grade of Product: EPA Protocol

Part Number:	E03NI81E15A37P2	Reference Number:	122-124386117-8
Cylinder Number:	CC366298	Cylinder Volume:	150.3 CF
Laboratory:	ASG - Durham - NC	Cylinder Pressure:	2015 PSIG
PGVP Number:	B22013	Valve Outlet:	590
Gas Code:	CO2,O2,BALN	Certification Date:	Jul 24, 2013

Expiration Date: Jul 24, 2021

Certification performed in accordance with "EPA Traceability Protocol for Assay and Certification of Gaseous Calibration Standards (May 2012)" document EPA 600/R-12/531, using the assay procedures listed. Analytical Methodology does not require correction for analytical interference. This cylinder has a total analytical uncertainty as stated below with a confidence level of 95%. There are no significant impurities which affect the use of this calibration mixture. All concentrations are on a volume/volume basis unless otherwise noted.

Do Not Use This Cylinder below 100 psig, i.e. 0.7 megapascals.

ANALYTICAL RESULTS

Component	Requested Concentration	Actual Concentration	Protocol Method	Total Relative Uncertainty	Assay Dates
CARBON DIOXIDE	9.000 %	8.945 %	G1	+/- 0.6% NIST Traceable	07/24/2013
OXYGEN	10.00 %	9.982 %	G1	+/- 0.6% NIST Traceable	07/24/2013
NITROGEN	Balance				

CALIBRATION STANDARDS

Type	Lot ID	Cylinder No	Concentration	Uncertainty	Expiration Date
NTRM	12061348	CC360808	11.002 % CARBON DIOXIDE/NITROGEN	+/- 0.6%	Jan 11, 2018
NTRM	8265818	SG9163064BAL	9.507 % OXYGEN/NITROGEN	+/- 0.6%	Dec 01, 2015

ANALYTICAL EQUIPMENT

Instrument/Make/Model	Analytical Principle	Last Multipoint Calibration
Horiba VIA510 CO2 42399380022	Nondispersive Infrared (NDIR)	Jul 05, 2013
Horiba MPA510 O2 41499150042	Paramagnetic	Jul 03, 2013

Triad Data Available Upon Request

Notes:

A Williams

Approved for Release

Airgas

Airgas Specialty Gases
630 United Drive
Durham, NC 27713
(919)544-3773 Fax: (919)544-3774
www.airgas.com

CERTIFICATE OF ANALYSIS
Grade of Product: EPA Protocol

Part Number:	E03NI60E15A1069	Reference Number:	122-124379401-1
Cylinder Number:	CC175833	Cylinder Volume:	158.2 CF
Laboratory:	ASG - Durham - NC	Cylinder Pressure:	2015 PSIG
PGVP Number:	B22013	Valve Outlet:	590
Gas Code:	CO2,O2,BALN	Certification Date:	Jun 11, 2013

Expiration Date: Jun 11, 2021

Certification performed in accordance with "EPA Traceability Protocol for Assay and Certification of Gaseous Calibration Standards (May 2012)" document EPA 600/R-12/531, using the assay procedures listed. Analytical Methodology does not require correction for analytical interference. This cylinder has a total analytical uncertainty as stated below with a confidence level of 95%. There are no significant impurities which affect the use of this calibration mixture. All concentrations are on a volume/volume basis unless otherwise noted.

Do Not Use This Cylinder below 100 psig, i.e. 0.7 megapascals.

ANALYTICAL RESULTS

Component	Requested Concentration	Actual Concentration	Protocol Method	Total Relative Uncertainty	Assay Dates
CARBON DIOXIDE	18.00 %	18.04 %	G1	+/- 0.7% NIST Traceable	06/11/2013
OXYGEN	22.00 %	21.91 %	G1	+/- 0.4% NIST Traceable	06/11/2013
NITROGEN	Balance				

CALIBRATION STANDARDS

Type	Lot ID	Cylinder No	Concentration	Uncertainty	Expiration Date
NTRM	12061551	CC354889	19.87 % CARBON DIOXIDE/NITROGEN	+/- 0.6%	Jan 27, 2018
NTRM	09061416	CC273522	22.53 % OXYGEN/NITROGEN	+/- 0.4%	Mar 08, 2019

ANALYTICAL EQUIPMENT

Instrument/Make/Model	Analytical Principle	Last Multipoint Calibration
Horiba VIA510 CO2 42399380022	Nondispersive Infrared (NDIR)	Jun 04, 2013
Horiba MPA510 O2 41499150042	Paramagnetic	Jun 06, 2013

Triad Data Available Upon Request

Notes:

Al Williams

Approved for Release

Airgas

Airgas Specialty Gases
630 United Drive
Durham, NC 27713
(919)544-3773 Fax: (919)544-3774
www.airgas.com

CERTIFICATE OF ANALYSIS
Grade of Product: EPA Protocol

Part Number:	E02NI99E15AC3D3	Reference Number:	122-124368712-5
Cylinder Number:	CC326338	Cylinder Volume:	144.4 CF
Laboratory:	ASG - Durham - NC	Cylinder Pressure:	2015 PSIG
PGVP Number:	B22013	Valve Outlet:	660
Gas Code:	SO2,BALN	Certification Date:	Apr 23, 2013

Expiration Date: Apr 23, 2017

Certification performed in accordance with "EPA Traceability Protocol for Assay and Certification of Gaseous Calibration Standards (May 2012)" document EPA 600/R-12/531, using the assay procedures listed. Analytical Methodology does not require correction for analytical interference. This cylinder has a total analytical uncertainty as stated below with a confidence level of 95%. There are no significant impurities which affect the use of this calibration mixture. All concentrations are on a volume/volume basis unless otherwise noted.

Do Not Use This Cylinder below 100 psig, i.e. 0.7 megapascals.

ANALYTICAL RESULTS

Component	Requested Concentration	Actual Concentration	Protocol Method	Total Relative Uncertainty	Assay Dates
SULFUR DIOXIDE	47.50 PPM	47.16 PPM	G1	+/- 1.0% NIST Traceable	04/16/2013, 04/23/2013
NITROGEN	Balance				

CALIBRATION STANDARDS

Type	Lot ID	Cylinder No	Concentration	Uncertainty	Expiration Date
NTRM	11060203	CC280978	49.67 PPM SULFUR DIOXIDE/NITROGEN	+/- 1.2%	May 13, 2017

ANALYTICAL EQUIPMENT

Instrument/Make/Model	Analytical Principle	Last Multipoint Calibration
Nicolet 6700 AHR0801549 SO2	FTIR	Apr 10, 2013

Triad Data Available Upon Request

Notes:

Approved for Release

Airgas

Airgas Specialty Gases
630 United Drive
Durham, NC 27713
(919)544-3773 Fax: (919)544-3774
www.airgas.com

CERTIFICATE OF ANALYSIS
Grade of Product: EPA Protocol

Part Number:	E02NI99E33AC3F4	Reference Number:	122-124360983-1
Cylinder Number:	FF4708	Cylinder Volume:	31.6 CF
Laboratory:	ASG - Durham - NC	Cylinder Pressure:	2217 PSIG
PGVP Number:	B22013	Valve Outlet:	660
Gas Code:	SO2	Certification Date:	Mar 04, 2013

Expiration Date: Mar 04, 2021

Certification performed in accordance with "EPA Traceability Protocol for Assay and Certification of Gaseous Calibration Standards (May 2012)" document EPA 600/R-12/531, using the assay procedures listed. Analytical Methodology does not require correction for analytical interference. This cylinder has a total analytical uncertainty as stated below with a confidence level of 95%. There are no significant impurities which affect the use of this calibration mixture. All concentrations are on a volume/volume basis unless otherwise noted.

Do Not Use This Cylinder below 100 psig, i.e. 0.7 megapascals.

ANALYTICAL RESULTS

Component	Requested Concentration	Actual Concentration	Protocol Method	Total Relative Uncertainty	Assay Dates
SULFUR DIOXIDE	92.50 PPM	91.83 PPM	G1	+/- 1.0% NIST Traceable	02/25/2013, 03/04/2013
NITROGEN	Balance				

CALIBRATION STANDARDS

Type	Lot ID	Cylinder No	Concentration	Uncertainty	Expiration Date
110602	11060228	CC283912	49.67 PPM SULFUR DIOXIDE/NITROGEN	+/- 1.2%	May 13, 2017

ANALYTICAL EQUIPMENT

Instrument/Make/Model	Analytical Principle	Last Multipoint Calibration
Nicolet 6700 AHR0801549 SO2	FTIR	Feb 14, 2013

Triad Data Available Upon Request

Notes:anw part # 782258

Approved for Release

Airgas

Airgas Specialty Gases
630 United Drive
Durham, NC 27713
(919)544-3773 Fax: (919)544-3774
www.airgas.com

CERTIFICATE OF ANALYSIS
Grade of Product: EPA Protocol

Part Number:	E02NI99E15A0262	Reference Number:	122-124370295-3
Cylinder Number:	CC33466	Cylinder Volume:	144.4 CF
Laboratory:	ASG - Durham - NC	Cylinder Pressure:	2015 PSIG
PGVP Number:	B22013	Valve Outlet:	660
Gas Code:	SO2,BALN	Certification Date:	Apr 30, 2013

Expiration Date: Apr 30, 2021

Certification performed in accordance with "EPA Traceability Protocol for Assay and Certification of Gaseous Calibration Standards (May 2012)" document EPA 600/R-12/531, using the assay procedures listed. Analytical Methodology does not require correction for analytical interference. This cylinder has a total analytical uncertainty as stated below with a confidence level of 95%. There are no significant impurities which affect the use of this calibration mixture. All concentrations are on a volume/volume basis unless otherwise noted.

Do Not Use This Cylinder below 100 psig, i.e. 0.7 megapascals.

ANALYTICAL RESULTS

Component	Requested Concentration	Actual Concentration	Protocol Method	Total Relative Uncertainty	Assay Dates
SULFUR DIOXIDE	240.0 PPM	244.7 PPM	G1	+/- 0.9% NIST Traceable	04/23/2013, 04/30/2013
NITROGEN	Balance				

CALIBRATION STANDARDS

Type	Lot ID	Cylinder No	Concentration	Uncertainty	Expiration Date
NTRM	11060826	CC338546	241.0 PPM SULFUR DIOXIDE/NITROGEN	+/- 0.8%	May 13, 2017

ANALYTICAL EQUIPMENT

Instrument/Make/Model	Analytical Principle	Last Multipoint Calibration
Nicolet 6700 AHR0801333 SO2	FTIR	Apr 17, 2013

Triad Data Available Upon Request

Notes:

Approved for Release

Airgas

Airgas Specialty Gases
630 United Drive
Durham, NC 27713
919-544-3773 Fax: 919-544-3774
www.airgas.com

CERTIFICATE OF ANALYSIS
Grade of Product: EPA Protocol

Part Number:	E02NI99E15A2656	Reference Number:	122-124320138-1
Cylinder Number:	CC220121	Cylinder Volume:	144 Cu.Ft.
Laboratory:	ASG - Durham - NC	Cylinder Pressure:	2015 PSIG
PGVP Number:	B22012	Valve Outlet:	660
Gas Code:	SO2	Analysis Date:	Jun 12, 2012

Expiration Date: Jun 12, 2014

Certification performed in accordance with "EPA Traceability Protocol (Sept. 1997)" using the assay procedures listed. Analytical Methodology does not require correction for analytical interferences. This cylinder has a total analytical uncertainty as stated below with a confidence level of 95%. There are no significant impurities which affect the use of this calibration mixture. All concentrations are on a volume/volume basis unless otherwise noted.
Do Not Use This Cylinder below 150 psig.i.e. 1 Mega Pascal

ANALYTICAL RESULTS

Component	Requested Concentration	Actual Concentration	Protocol Method	Total Relative Uncertainty
SULFUR DIOXIDE	485.0 PPM	491.6 PPM	G1	+/- 1% NIST Traceable
NITROGEN	Balance			

CALIBRATION STANDARDS

Type	Lot ID	Cylinder No	Concentration	Expiration Date
090610	090610	CC300382	479.5PPM SULFUR DIOXIDE/NITROGEN	May 15, 2015

ANALYTICAL EQUIPMENT

Instrument/Make/Model	Analytical Principle	Last Multipoint Calibration
Nicolet 6700 AHR0801549 SO2	FTIR	May 16, 2012

Triad Data Available Upon Request

Notes:ANW PN: 782266

Approved for Release

Airgas

CERTIFICATE OF ANALYSIS
Grade of Product: EPA Protocol

Part Number:	E03NI99E15A3794	Reference Number:	122-124277916-1
Cylinder Number:	cc323813	Cylinder Volume:	144.4 CF
Laboratory:	ASG - Durham - NC	Cylinder Pressure:	1600 PSIG
PGVP Number:	B22011	Valve Outlet:	660
Gas Code:	NO2,O2,BALN	Certification Date:	Aug 05, 2011

Expiration Date: Aug 05, 2014

Certification performed in accordance with "EPA Traceability Protocol for Assay and Certification of Gaseous Calibration Standards (May 2012)" document EPA 600/R-12/531, using the assay procedures listed. Analytical Methodology does not require correction for analytical interference. This cylinder has a total analytical uncertainty as stated below with a confidence level of 95%. There are no significant impurities which affect the use of this calibration mixture. All concentrations are on a volume/volume basis unless otherwise noted.

Do Not Use This Cylinder below 100 psig, i.e. 0.7 megapascals.

ANALYTICAL RESULTS

Component	Requested Concentration	Actual Concentration	Protocol Method	Total Relative Uncertainty	Assay Dates
NITROGEN DIOXIDE	52.00 PPM	50.60 PPM	G1	+/- 2% NIST Traceable	08/05/2011
NITROGEN	Balance				

CALIBRATION STANDARDS

Type	Lot ID	Cylinder No	Concentration	Uncertainty	Expiration Date
GMIS	GMIS	CC341310	61.16 PPM NITROGEN DIOXIDE/NITROGEN		Mar 07, 2013

ANALYTICAL EQUIPMENT

Instrument/Make/Model	Analytical Principle	Last Multipoint Calibration
TECO 42CHL NOX (1-5000ppm)	Chemiluminescence	Aug 04, 2011

Triad Data Available Upon Request

Notes:ANWPN 780881

Signature on file

Approved for Release

Airgas

Airgas Specialty Gases
630 United Drive
Durham, NC 27713
(919)544-3773 Fax: (919)544-3774
www.airgas.com

CERTIFICATE OF ANALYSIS
Grade of Product: EPA Protocol

Part Number:	E02NI99E15A0936	Reference Number:	122-124368712-4
Cylinder Number:	SG9152406BAL	Cylinder Volume:	144.4 CF
Laboratory:	ASG - Durham - NC	Cylinder Pressure:	2015 PSIG
PGVP Number:	B22013	Valve Outlet:	660
Gas Code:	NO	Certification Date:	Apr 15, 2013

Expiration Date: Apr 15, 2021

Certification performed in accordance with "EPA Traceability Protocol for Assay and Certification of Gaseous Calibration Standards (May 2012)" document EPA 600/R-12/531, using the assay procedures listed. Analytical Methodology does not require correction for analytical interference. This cylinder has a total analytical uncertainty as stated below with a confidence level of 95%. There are no significant impurities which affect the use of this calibration mixture. All concentrations are on a volume/volume basis unless otherwise noted.

Do Not Use This Cylinder below 100 psig, i.e. 0.7 megapascals.

ANALYTICAL RESULTS

Component	Requested Concentration	Actual Concentration	Protocol Method	Total Relative Uncertainty	Assay Dates
NOX	240.0 PPM	234.7 PPM	G1	+/- 0.6% NIST Traceable	04/08/2013, 04/15/2013
NITRIC OXIDE	240.0 PPM	234.6 PPM	G1	+/- 0.6% NIST Traceable	04/08/2013, 04/15/2013
NITROGEN	Balance				

CALIBRATION STANDARDS

Type	Lot ID	Cylinder No	Concentration	Uncertainty	Expiration Date
NTRM	11060101	CC330478	248.4 PPM NITRIC OXIDE/NITROGEN	+/- 0.5%	Jan 11, 2017
PRM	PRM	680179	10.01 PPM NITROGEN DIOXIDE/NITROGEN	+/- 2.0%	Feb 14, 2012
GMIS	GMIS	CC323701	4.761 PPM NITROGEN DIOXIDE/NITROGEN	+/- 2.0%	Sep 17, 2015

The SRM or PRM noted above is only in reference to the GMIS used in the assay and not part of the analysis.

ANALYTICAL EQUIPMENT

Instrument/Make/Model	Analytical Principle	Last Multipoint Calibration
Nicolet 6700 AHR0801549 NO	FTIR	Apr 10, 2013
Nicolet 6700 AHR0801549 NO	FTIR	Apr 10, 2013

Triad Data Available Upon Request

Notes:

Approved for Release

Airgas

Airgas Specialty Gases
630 United Drive
Durham, NC 27713
919-544-3773 Fax: 919-544-3774
www.airgas.com

CERTIFICATE OF ANALYSIS
Grade of Product: EPA Protocol

Part Number:	E02NI99E15AC4V2	Reference Number:	122-124320138-2
Cylinder Number:	CC120144	Cylinder Volume:	144 Cu.Ft.
Laboratory:	ASG - Durham - NC	Cylinder Pressure:	2015 PSIG
PGVP Number:	B22012	Valve Outlet:	660
Gas Code:	NO	Analysis Date:	Jun 12, 2012

Expiration Date: Jun 12, 2014

Certification performed in accordance with "EPA Traceability Protocol (Sept. 1997)" using the assay procedures listed. Analytical Methodology does not require correction for analytical interferences. This cylinder has a total analytical uncertainty as stated below with a confidence level of 95%. There are no significant impurities which affect the use of this calibration mixture. All concentrations are on a volume/volume basis unless otherwise noted.
Do Not Use This Cylinder below 150 psig.i.e. 1 Mega Pascal

ANALYTICAL RESULTS

Component	Requested Concentration	Actual Concentration	Protocol Method	Total Relative Uncertainty
NITRIC OXIDE	485.0 PPM	484.6 PPM	G1	+/- 1% NIST Traceable
NITROGEN	Balance			
Total oxides of nitrogen		484.8 PPM		For Reference Only

CALIBRATION STANDARDS

Type	Lot ID	Cylinder No	Concentration	Expiration Date
NTRM	100604	CC267661	495.6PPM NITRIC OXIDE/NITROGEN	Feb 01, 2016

ANALYTICAL EQUIPMENT

Instrument/Make/Model	Analytical Principle	Last Multipoint Calibration
Nicolet 6700 AHR0801549 NO	FTIR	May 16, 2012

Triad Data Available Upon Request

Notes:ANW PN: 780711

Approved for Release

Airgas

Airgas Specialty Gases
630 United Drive
Durham, NC 27713
(919)544-3773 Fax: (919)544-3774
www.airgas.com

CERTIFICATE OF ANALYSIS
Grade of Product: EPA Protocol

Part Number:	E02NI99E15A0223	Reference Number:	122-124360979-1
Cylinder Number:	CC177291	Cylinder Volume:	144.3 CF
Laboratory:	ASG - Durham - NC	Cylinder Pressure:	2015 PSIG
PGVP Number:	B22013	Valve Outlet:	350
Gas Code:	CO	Certification Date:	Feb 26, 2013

Expiration Date: Feb 26, 2021

Certification performed in accordance with "EPA Traceability Protocol for Assay and Certification of Gaseous Calibration Standards (May 2012)" document EPA 600/R-12/531, using the assay procedures listed. Analytical Methodology does not require correction for analytical interference. This cylinder has a total analytical uncertainty as stated below with a confidence level of 95%. There are no significant impurities which affect the use of this calibration mixture. All concentrations are on a volume/volume basis unless otherwise noted.

Do Not Use This Cylinder below 100 psig, i.e. 0.7 megapascals.

ANALYTICAL RESULTS

Component	Requested Concentration	Actual Concentration	Protocol Method	Total Relative Uncertainty	Assay Dates
CARBON MONOXIDE	45.00 PPM	45.07 PPM	G1	+/- 1.2% NIST Traceable	02/26/2013
NITROGEN	Balance				

CALIBRATION STANDARDS

Type	Lot ID	Cylinder No	Concentration	Uncertainty	Expiration Date
NTRM	12060519	CC353911	49.53 PPM CARBON MONOXIDE/NITROGEN	+/- 0.6%	Dec 20, 2017

ANALYTICAL EQUIPMENT

Instrument/Make/Model	Analytical Principle	Last Multipoint Calibration
Nicolet 6700 AHR0801549 CO	FTIR	Feb 14, 2013

Triad Data Available Upon Request

Notes:ANW PART # 780442

Amber Adams

Approved for Release

Airgas

Airgas Specialty Gases
630 United Drive
Durham, NC 27713
(919)544-3773 Fax: (919)544-3774
www.airgas.com

CERTIFICATE OF ANALYSIS
Grade of Product: EPA Protocol

Part Number:	E02NI99E33AC2S2	Reference Number:	122-124373833-1
Cylinder Number:	FF35824	Cylinder Volume:	28.5 CF
Laboratory:	ASG - Durham - NC	Cylinder Pressure:	1984 PSIG
PGVP Number:	B22013	Valve Outlet:	350
Gas Code:	CO,BALN	Certification Date:	May 15, 2013

Expiration Date: May 15, 2021

Certification performed in accordance with "EPA Traceability Protocol for Assay and Certification of Gaseous Calibration Standards (May 2012)" document EPA 600/R-12/531, using the assay procedures listed. Analytical Methodology does not require correction for analytical interference. This cylinder has a total analytical uncertainty as stated below with a confidence level of 95%. There are no significant impurities which affect the use of this calibration mixture. All concentrations are on a volume/volume basis unless otherwise noted.

Do Not Use This Cylinder below 100 psig, i.e. 0.7 megapascals.

ANALYTICAL RESULTS

Component	Requested Concentration	Actual Concentration	Protocol Method	Total Relative Uncertainty	Assay Dates
CARBON MONOXIDE	92.50 PPM	91.38 PPM	G1	+/- 0.7% NIST Traceable	05/15/2013
NITROGEN	Balance				

CALIBRATION STANDARDS

Type	Lot ID	Cylinder No	Concentration	Uncertainty	Expiration Date
NTRM	12062203	CC128005	97.56 PPM CARBON MONOXIDE/NITROGEN	+/- 0.6%	May 25, 2018

ANALYTICAL EQUIPMENT

Instrument/Make/Model	Analytical Principle	Last Multipoint Calibration
Nicolet 6700 AHR0801549 CO	FTIR	May 10, 2013

Triad Data Available Upon Request

Notes:

Approved for Release

METHOD 5 DRY GAS METER CALIBRATION USING CRITICAL ORIFICES

METER CONSOLE #: T1
DGM SERIAL #: 16787494

DATE: 05/08/13 CRITICAL ORIFICE SET SERIAL #: 1345 BAROMETRIC PRESSURE (in Hg): INITIAL 29.5 FINAL 29.5 AVG (P_{bar}) 29.5

ORIFICE #	RUN #	K' FACTOR (AVG)	TESTED VACUUM (in Hg)	DGM READINGS (FT^3) INITIAL	FINAL	NET (V_m)	TEMPERATURES °F AMBIENT	DGM INLET INITIAL	DGM INLET FINAL	DGM OUTLET INITIAL	DGM OUTLET FINAL	DGM AVG	ELAPSED TIME (MIN) θ	DGM ΔH (in H_2O)	(1) V_m (STD)	(2) V_{cr} (STD)	(3) Y	Y CHECK < 0.02 VAR.	$\Delta H_@$	ΔH CHECK < 0.2 VAR.
23	1	0.6385	17	0.000	5.060	5.060	70	75	74	71	72	73.0	6.00	2.200	4.970	4.910	0.9880	OK	1.81	OK
23	2	0.6385	17	5.060	10.114	5.054	70	74	74	72	72	73.0	6.00	2.200	4.964	4.910	0.9892	OK	1.81	OK
23	3	0.6385	17	10.114	15.160	5.046	70	74	73	72	72	72.8	6.00	2.200	4.959	4.910	0.9903	OK	1.82	OK
															AVERAGES =>		0.9891		1.8151	
18	1	0.4913	17	21.000	26.198	5.198	70	72	72	72	72	72.0	8.00	1.250	5.103	5.038	0.9872	OK	1.74	OK
18	2	0.4913	17	26.198	31.400	5.202	70	72	72	72	72	72.0	8.00	1.250	5.107	5.038	0.9864	OK	1.74	OK
18	3	0.4913	17	31.400	36.585	5.185	70	72	72	72	72	72.0	8.00	1.250	5.091	5.038	0.9897	OK	1.74	OK
															AVERAGES =>		0.9878		1.7407	
12	1	0.3080	17	37.500	42.698	5.198	70	72	72	71	71	71.5	13.00	0.440	5.098	5.132	1.0068	OK	1.56	OK
12	2	0.3080	17	42.698	47.863	5.165	70	72	71	71	71	71.3	13.00	0.440	5.068	5.132	1.0127	OK	1.56	OK
12	3	0.3080	17	47.863	53.042	5.179	70	71	71	71	71	71.0	13.00	0.440	5.084	5.132	1.0095	OK	1.56	OK
															AVERAGES =>		1.0097		1.5581	

ALL VOLUMES GREATER THAN 5 ACF?	OK

AVERAGE $\Delta H_@$ = **1.705**

AVERAGE DRY GAS METER CALIBRATION FACTOR, Y = **0.9955**

USING THE CRITICAL ORIFICES AS CALIBRATION STANDARDS:
The following equations are used to calculate the standard volumes of air passed through the DGM, V_m (std), and the critical orifice, V_{cr} (std), and the DGM calibration factor, Y. These equations are automatically calculated in the spreadsheet above.

(1) $V_m\,(std) = K_1\, V_m \dfrac{P_{bar} + (\Delta H/13.6)}{T_m}$ = Net volume of gas sample passed through DGM, corrected to standard conditions

K_1 = 17.64 °R/in. Hg (English), 0.3858 °K/mm Hg (Metric)

T_m = Absolute DGM avg. temperature (°R - English, °K - Metric)

(2) $V_{cr}\,(std) = K' \sqrt{\dfrac{P_{bar}\,\theta}{T_{amb}}}$ = Volume of gas sample passed through the critical orifice, corrected to standard conditions

T_{amb} = Absolute ambient temperature (°R - English, °K - Metric)

K' = Average K' factor from Critical Orifice Calibration

(3) $Y = \dfrac{V_{cr}\,(std)}{V_m\,(std)}$ = DGM calibration factor

$$\Delta H_@ = \left(\frac{0.75\,\theta}{V_{cr}(std)}\right)^2 \left(\frac{\Delta H\; V_m(std)}{V_m}\right)$$

ORIFICE CHECKS: IF Y VARIATION EXCEEDS 2.00%, RECALIBRATE ORIFICE	GAMMA	RESULT	STATUS
	GAMMA 1	-0.64	OK
	GAMMA 2	-0.78	OK
	GAMMA 3	1.42	OK

1) Select three critical orifices to calibrate the dry gas meter which bracket the expected operating range.
2) Record barometric pressure before and after calibration procedure.
3) Run at tested vacuum (from Orifice Calibration Report), for a period of time necessary to achieve a minimum total volume of 5 cubic feet.
4) Record readings below, shaded columns are automatically calculated.

METHOD 5 DRY GAS METER CALIBRATION USING CRITICAL ORIFICES

METER CONSOLE #: T3
DGM SERIAL #: 9366879

DATE: 05/08/13 CRITICAL ORIFICE SET SERIAL #: 1345

BAROMETRIC PRESSURE (in Hg):	INITIAL	FINAL	AVG (P_{bar})
	29.5	29.5	29.5

ORIFICE #	RUN #	K' FACTOR (AVG)	TESTED VACUUM (in Hg)	DGM READINGS (FT^3) INITIAL	FINAL	NET (V_m)	TEMPERATURES °F AMBIENT	DGM INLET INITIAL	DGM INLET FINAL	DGM OUTLET INITIAL	DGM OUTLET FINAL	DGM AVG	ELAPSED TIME (MIN) θ	DGM ΔH (in H_2O)	(1) V_m (STD)	(2) V_{cr} (STD)	(3) Y	Y CHECK < 0.02 VAR.	$\Delta H_@$	ΔH CHECK < 0.2 VAR.
12	1	0.3080	17	810.500	815.584	5.084	71	75	73	69	70	71.8	12.50	0.450	4.984	4.930	0.9892	OK	1.60	OK
12	2	0.3080	17	815.584	820.677	5.093	71	73	73	70	71	71.8	12.50	0.450	4.993	4.930	0.9875	OK	1.60	OK
12	3	0.3080	17	820.677	825.754	5.077	71	73	73	71	71	72.0	12.50	0.450	4.975	4.930	0.9911	OK	1.59	OK
															AVERAGES =>		0.9893		1.5948	
23	1	0.6385	17	826.500	831.576	5.076	71	73	73	71	72	72.3	6.00	2.200	4.993	4.906	0.9826	OK	1.82	OK
23	2	0.6385	17	831.576	836.654	5.078	71	73	73	72	71	72.3	6.00	2.200	4.995	4.906	0.9822	OK	1.82	OK
23	3	0.6385	17	836.654	841.714	5.060	71	73	73	71	72	72.3	6.00	2.200	4.977	4.906	0.9857	OK	1.82	OK
															AVERAGES =>		0.9835		1.8208	
18	1	0.4913	17	842.000	847.243	5.243	71	73	73	72	72	72.5	8.00	1.280	5.143	5.033	0.9786	OK	1.78	OK
18	2	0.4913	17	847.243	852.482	5.239	71	73	73	72	72	72.5	8.00	1.280	5.139	5.033	0.9794	OK	1.78	OK
18	3	0.4913	17	852.482	857.723	5.241	71	73	73	72	72	72.5	8.00	1.280	5.141	5.033	0.9790	OK	1.78	OK
															AVERAGES =>		0.9790		1.7843	

ALL VOLUMES GREATER THAN 5 ACF?	OK

AVERAGE $\Delta H_@$ = **1.733**

AVERAGE DRY GAS METER CALIBRATION FACTOR, Y = **0.9839**

USING THE CRITICAL ORIFICES AS CALIBRATION STANDARDS:
The following equations are used to calculate the standard volumes of air passed through the DGM, V_m (std), and the critical orifice, V_{cr} (std), and the DGM calibration factor, Y. These equations are automatically calculated in the spreadsheet above.

(1) $V_m\,(std) = K_1\, V_m \dfrac{P_{bar} + (\Delta H/13.6)}{T_m}$ = Net volume of gas sample passed through DGM, corrected to standard conditions

K_1 = 17.64 °R/in. Hg (English), 0.3858 °K/mm Hg (Metric)

T_m = Absolute DGM avg. temperature (°R - English, °K - Metric)

(2) $V_{cr}\,(std) = K' \sqrt{\dfrac{P_{bar}\,\theta}{T_{amb}}}$ = Volume of gas sample passed through the critical orifice, corrected to standard conditions

T_{amb} = Absolute ambient temperature (°R - English, °K - Metric)

K' = Average K' factor from Critical Orifice Calibration

(3) $Y = \dfrac{V_{cr}\,(std)}{V_m\,(std)}$ = DGM calibration factor

$$\Delta H_@ = \left(\frac{0.75\,\theta}{V_{cr}(std)}\right)^2 \left(\frac{\Delta H\; V_m(std)}{V_m}\right)$$

ORIFICE CHECKS:	GAMMA	RESULT	STATUS
IF Y VARIATION EXCEEDS 2.00%,	GAMMA 1	0.54	OK
RECALIBRATE ORIFICE	GAMMA 2	-0.05	OK
	GAMMA 3	-0.50	OK

1) Select three critical orifices to calibrate the dry gas meter which bracket the expected operating range.
2) Record barometric pressure before and after calibration procedure.
3) Run at tested vacuum (from Orifice Calibration Report), for a period of time necessary to achieve a minimum total volume of 5 cubic feet.
4) Record readings below, shaded columns are automatically calculated.

-245-

METHOD 5 DRY GAS METER CALIBRATION USING CRITICAL ORIFICES

METER CONSOLE #: T4
DGM SERIAL #: 12834628

DATE: 05/08/13 CRITICAL ORIFICE SET SERIAL #: 1345

BAROMETRIC PRESSURE (in Hg):	INITIAL	FINAL	AVG (P_{bar})
	29.5	29.5	29.5

ORIFICE #	RUN #	K' FACTOR (AVG)	TESTED VACUUM (in Hg)	DGM READINGS (FT^3) INITIAL	FINAL	NET (V_m)	TEMPERATURES °F AMBIENT	DGM INLET INITIAL	DGM INLET FINAL	DGM OUTLET INITIAL	DGM OUTLET FINAL	DGM AVG	ELAPSED TIME (MIN) θ	DGM ΔH (in H_2O)	(1) V_m (STD)	(2) V_{cr} (STD)	(3) Y	Y CHECK < 0.02 VAR.	$\Delta H_@$	ΔH CHECK < 0.2 VAR.
23	1	0.6385	17	707.500	712.897	5.397	69	72	74	68	69	70.8	6.50	2.100	5.322	5.325	1.0004	OK	1.74	OK
23	2	0.6385	17	712.897	718.280	5.383	69	74	73	69	69	71.3	6.50	2.100	5.304	5.325	1.0040	OK	1.73	OK
23	3	0.6385	17	718.280	723.672	5.392	69	73	73	69	70	71.3	6.50	2.100	5.312	5.325	1.0023	OK	1.73	OK
															AVERAGES =>		1.0022		1.7348	
18	1	0.4913	17	724.500	729.944	5.444	69	73	74	70	71	72.0	8.50	1.180	5.344	5.358	1.0026	OK	1.64	OK
18	2	0.4913	17	729.944	735.400	5.456	69	74	74	71	71	72.5	8.50	1.180	5.351	5.358	1.0013	OK	1.64	OK
18	3	0.4913	17	735.400	740.848	5.448	69	74	74	71	71	72.5	8.50	1.180	5.343	5.358	1.0028	OK	1.64	OK
															AVERAGES =>		1.0023		1.6388	
12	1	0.3080	17	741.100	746.256	5.156	69	74	74	71	71	72.5	13.00	0.430	5.047	5.137	1.0178	OK	1.52	OK
12	2	0.3080	17	746.256	751.407	5.151	69	74	74	71	72	72.8	13.00	0.430	5.040	5.137	1.0193	OK	1.52	OK
12	3	0.3080	17	751.407	756.563	5.156	69	74	74	72	72	73.0	13.00	0.430	5.042	5.137	1.0188	OK	1.51	OK
															AVERAGES =>		1.0187		1.5155	

ALL VOLUMES GREATER THAN 5 ACF?	OK

AVERAGE $\Delta H_@$ = **1.630**

AVERAGE DRY GAS METER CALIBRATION FACTOR, Y = **1.0077**

USING THE CRITICAL ORIFICES AS CALIBRATION STANDARDS:
The following equations are used to calculate the standard volumes of air passed through the DGM, V_m (std), and the critical orifice, V_{cr} (std), and the DGM calibration factor, Y. These equations are automatically calculated in the spreadsheet above.

(1) $V_m\,(std) = K_1\, V_m \dfrac{P_{bar} + (\Delta H/13.6)}{T_m}$ = Net volume of gas sample passed through DGM, corrected to standard conditions

K_1 = 17.64 °R/in. Hg (English), 0.3858 °K/mm Hg (Metric)

T_m = Absolute DGM avg. temperature (°R - English, °K - Metric)

(2) $V_{cr}\,(std) = K' \sqrt{\dfrac{P_{bar}\,\theta}{T_{amb}}}$ = Volume of gas sample passed through the critical orifice, corrected to standard conditions

T_{amb} = Absolute ambient temperature (°R - English, °K - Metric)

K' = Average K' factor from Critical Orifice Calibration

(3) $Y = \dfrac{V_{cr}\,(std)}{V_m\,(std)}$ = DGM calibration factor

$$\Delta H_@ = \left(\frac{0.75\,\theta}{V_{cr}(std)}\right)^2 \left(\frac{\Delta H\; V_m(std)}{V_m}\right)$$

ORIFICE CHECKS:	GAMMA	RESULT	STATUS
IF Y VARIATION EXCEEDS 2.00%,	GAMMA 1	-0.54	OK
RECALIBRATE ORIFICE	GAMMA 2	-0.54	OK
	GAMMA 3	1.09	OK

1) Select three critical orifices to calibrate the dry gas meter which bracket the expected operating range.
2) Record barometric pressure before and after calibration procedure.
3) Run at tested vacuum (from Orifice Calibration Report), for a period of time necessary to achieve a minimum total volume of 5 cubic feet.
4) Record readings below, shaded columns are automatically calculated.

-246-

METHOD 5 DRY GAS METER CALIBRATION USING CRITICAL ORIFICES

METER CONSOLE #: T5
DGM SERIAL #: 13278859

DATE: 05/09/13 CRITICAL ORIFICE SET SERIAL #: 1345 BAROMETRIC PRESSURE (in Hg): INITIAL 29.6 FINAL 29.6 AVG (P_{bar}) 29.6

ORIFICE #	RUN #	K' FACTOR (AVG)	TESTED VACUUM (in Hg)	DGM READINGS (FT^3) INITIAL	FINAL	NET (V_m)	TEMPERATURES °F AMBIENT	DGM INLET INITIAL	DGM INLET FINAL	DGM OUTLET INITIAL	DGM OUTLET FINAL	DGM AVG	ELAPSED TIME (MIN) θ	DGM ΔH (in H_2O)	(1) V_m (STD)	(2) V_{cr} (STD)	(3) Y	Y CHECK < 0.02 VAR.	$\Delta H_@$	ΔH CHECK < 0.2 VAR.
12	1	0.3080	17	405.800	410.892	5.092	70	72	72	68	70	70.5	13.00	0.490	5.021	5.150	1.0257	OK	1.73	OK
12	2	0.3080	17	410.892	415.986	5.094	71	72	72	70	71	71.3	13.00	0.490	5.016	5.145	1.0257	OK	1.73	OK
12	3	0.3080	17	415.986	421.447	5.461	72	72	73	71	71	71.8	14.00	0.490	5.372	5.535	1.0304	OK	1.73	OK
															AVERAGES =>		1.0273		1.7331	
18	1	0.4913	17	422.000	427.036	5.036	73	73	74	71	72	72.5	8.00	1.350	4.958	5.041	1.0168	OK	1.88	OK
18	2	0.4913	17	427.036	432.120	5.084	73	74	74	72	72	73.0	8.00	1.350	5.000	5.041	1.0081	OK	1.88	OK
18	3	0.4913	17	432.120	437.236	5.116	73	74	74	72	72	73.0	8.00	1.350	5.032	5.041	1.0018	OK	1.88	OK
															AVERAGES =>		1.0089		1.8817	
23	1	0.6385	17	439.000	444.365	5.365	74	75	75	73	73	74.0	6.50	2.200	5.278	5.318	1.0076	OK	1.82	OK
23	2	0.6385	17	444.365	449.687	5.322	75	75	76	73	73	74.3	6.50	2.200	5.233	5.313	1.0153	OK	1.82	OK
23	3	0.6385	17	449.687	455.077	5.390	75	76	76	73	74	74.8	6.50	2.200	5.295	5.313	1.0034	OK	1.82	OK
															AVERAGES =>		1.0087		1.8200	

ALL VOLUMES GREATER THAN 5 ACF? OK

AVERAGE $\Delta H_@$ = **1.812**

AVERAGE DRY GAS METER CALIBRATION FACTOR, Y = **1.0150**

USING THE CRITICAL ORIFICES AS CALIBRATION STANDARDS:
The following equations are used to calculate the standard volumes of air passed through the DGM, V_m (std), and the critical orifice, V_{cr} (std), and the DGM calibration factor, Y. These equations are automatically calculated in the spreadsheet above.

(1) $V_m\,(std) = K_1\, V_m \dfrac{P_{bar} + (\Delta H/13.6)}{T_m}$ = Net volume of gas sample passed through DGM, corrected to standard conditions

K_1 = 17.64 °R/in. Hg (English), 0.3858 °K/mm Hg (Metric)

T_m = Absolute DGM avg. temperature (°R - English, °K - Metric)

(2) $V_{cr}\,(std) = K' \sqrt{\dfrac{P_{bar}\,\theta}{T_{amb}}}$ = Volume of gas sample passed through the critical orifice, corrected to standard conditions

T_{amb} = Absolute ambient temperature (°R - English, °K - Metric)

K' = Average K' factor from Critical Orifice Calibration

(3) $Y = \dfrac{V_{cr}\,(std)}{V_m\,(std)}$ = DGM calibration factor

$$\Delta H_@ = \left(\frac{0.75\,\theta}{V_{cr}(std)}\right)^2 \left(\frac{\Delta H\ V_m(std)}{V_m}\right)$$

ORIFICE CHECKS:	GAMMA	RESULT	STATUS
IF Y VARIATION EXCEEDS 2.00%,	GAMMA 1	1.21	OK
RECALIBRATE ORIFICE	GAMMA 2	-0.60	OK
	GAMMA 3	-0.61	OK

1) Select three critical orifices to calibrate the dry gas meter which bracket the expected operating range.
2) Record barometric pressure before and after calibration procedure.
3) Run at tested vacuum (from Orifice Calibration Report), for a period of time necessary to achieve a minimum total volume of 5 cubic feet.
4) Record readings below, shaded columns are automatically calculated.

METHOD 5 DRY GAS METER CALIBRATION USING CRITICAL ORIFICES

METER CONSOLE #: T6
DGM SERIAL #: 12425983

DATE: 07/11/13 CRITICAL ORIFICE SET SERIAL #: 1345 BAROMETRIC PRESSURE (in Hg): INITIAL 29.4 FINAL 29.3 AVG (P_{bar}) 29.35

ORIFICE #	RUN #	K' FACTOR (AVG)	TESTED VACUUM (in Hg)	DGM READINGS (FT^3) INITIAL	FINAL	NET (V_m)	TEMPERATURES °F AMBIENT	DGM INLET INITIAL	DGM INLET FINAL	DGM OUTLET INITIAL	DGM OUTLET FINAL	DGM AVG	ELAPSED TIME (MIN) θ	DGM ΔH (in H_2O)	(1) V_m (STD)	(2) V_{cr} (STD)	(3) Y	Y CHECK < 0.02 VAR.	$\Delta H_@$	ΔH CHECK < 0.2 VAR.
23	1	0.6385	17	97.000	102.162	5.162	80	82	83	81	81	81.8	6.00	2.200	4.963	4.840	0.9752	OK	1.83	OK
23	2	0.6385	17	102.162	107.325	5.163	80	83	85	81	82	82.8	6.00	2.200	4.955	4.840	0.9768	OK	1.83	OK
23	3	0.6385	17	107.325	112.510	5.185	81	85	87	82	82	84.0	6.00	2.200	4.965	4.836	0.9740	OK	1.82	OK
															AVERAGES =>		0.9753		1.8260	
12	1	0.3080	19	112.800	117.987	5.187	81	85	84	82	83	83.5	12.50	0.460	4.950	4.860	0.9818	OK	1.63	OK
12	2	0.3080	19	117.987	123.168	5.181	81	84	85	83	83	83.8	12.50	0.460	4.942	4.860	0.9834	OK	1.63	OK
12	3	0.3080	19	123.168	128.373	5.205	81	85	85	83	83	84.0	12.50	0.460	4.962	4.860	0.9793	OK	1.63	OK
															AVERAGES =>		0.9815		1.6329	
18	1	0.4913	18	129.000	134.025	5.025	81	85	86	83	83	84.3	7.50	1.250	4.798	4.651	0.9694	OK	1.75	OK
18	2	0.4913	18	134.025	139.045	5.020	82	86	86	83	84	84.8	7.50	1.250	4.789	4.647	0.9703	OK	1.75	OK
18	3	0.4913	18	139.700	145.069	5.369	82	86	86	84	84	85.0	8.00	1.250	5.119	4.956	0.9682	OK	1.75	OK
															AVERAGES =>		0.9693		1.7466	

ALL VOLUMES GREATER THAN 5 ACF? OK

AVERAGE $\Delta H_@$ = 1.735

AVERAGE DRY GAS METER CALIBRATION FACTOR, Y = 0.9754

USING THE CRITICAL ORIFICES AS CALIBRATION STANDARDS:
The following equations are used to calculate the standard volumes of air passed through the DGM, V_m (std), and the critical orifice, V_{cr} (std), and the DGM calibration factor, Y. These equations are automatically calculated in the spreadsheet above.

(1) $V_m\,(std) = K_1\, V_m \dfrac{P_{bar} + (\Delta H/13.6)}{T_m}$ = Net volume of gas sample passed through DGM, corrected to standard conditions

K_1 = 17.64 °R/in. Hg (English), 0.3858 °K/mm Hg (Metric)

T_m = Absolute DGM avg. temperature (°R - English, °K - Metric)

(2) $V_{cr}\,(std) = K' \sqrt{\dfrac{P_{bar}\,\theta}{T_{amb}}}$ = Volume of gas sample passed through the critical orifice, corrected to standard conditions

T_{amb} = Absolute ambient temperature (°R - English, °K - Metric)

K' = Average K' factor from Critical Orifice Calibration

(3) $Y = \dfrac{V_{cr}\,(std)}{V_m\,(std)}$ = DGM calibration factor

$$\Delta H_@ = \left(\frac{0.75\,\theta}{V_{cr}(std)}\right)^2 \left(\frac{\Delta H\; V_m(std)}{V_m}\right)$$

ORIFICE CHECKS:	GAMMA	RESULT	STATUS
IF Y VARIATION EXCEEDS 2.00%,	GAMMA 1	-0.01	OK
RECALIBRATE ORIFICE	GAMMA 2	0.63	OK
	GAMMA 3	-0.62	OK

1) Select three critical orifices to calibrate the dry gas meter which bracket the expected operating range.
2) Record barometric pressure before and after calibration procedure.
3) Run at tested vacuum (from Orifice Calibration Report), for a period of time necessary to achieve a minimum total volume of 5 cubic feet.
4) Record readings below, shaded columns are automatically calculated.

ONSITE METHOD 5 DRY GAS METER AUDIT AND POSTTEST CALIBRATION USING CRITICAL ORIFICE

Client Name	Covanta Energy Group, Inc.
Plant Name	Huntington Resource Recovery Facility
Plant City, State	East Northport, NY
Test Location	Unit 1 FF Outlet
Project Number	13022
Date of Pre-Test	08/26/13
Date of Post-Test	
Tester Signature	

Meterbox ID	T1	
Meter Delta Ha	1.705	
Meter Y	0.9955	
Reference Pressure	29.9	STATUS
Barometric Pressure	29.9	PASS
Pbar Pretest	29.9	
Pbar Posttest		

ORIFICE ID# INCLUDING SET-#	RUN #	K' FACTOR (AVG)	TESTED VACUUM (in Hg)	DGM READINGS (FT^3) INITIAL	DGM READINGS (FT^3) FINAL	TEMPERATURES °F AMB	DGM INLET INIT	DGM INLET FINAL	DGM OUTLET INIT	DGM OUTLET FINAL	DGM AVG	ELAPSED TIME (MIN) θ	DGM ΔH (in H_2O)	(1) V_m (STD)	(2) V_{cr} (STD)	(3) Y	Y VARIATION (%)	QA STATUS
PRETEST ONSITE 10 MINUTE AUDIT						PRE												
NA	1	NA	NA	617.500	625.255	NA	87	88	83	84	85.5	10.00	1.71	7.5296	NA	0.9837	1.18	PASS
POSTTEST CHECK		AVERAGE DELTA H =				POST												
	1	#N/A									0			0.0	#N/A	#N/A		
0	2	#N/A	0	0.000		0	0		0		0		0.00	0.0	#N/A	#N/A		
0	3	#N/A	0	0.000		0	0		0		0		0.00	0.0	#N/A	#N/A		
															AVG =	#N/A	#N/A	#N/A

FINAL - INITIAL VOLUMES > 5 CUBIC FEET? FAIL

PRETEST PROCEDURES:

1) Record barometric pressure and temperatures before calibration.
2) Run 10 minute audit at Delta Ha without an orifice.
3) Record ambient temperature and compare all thermocouple readings.
4) Record thermocouple IDs and readings in table.

POSTTEST PROCEDURES:

1) Record barometric pressure before calibration.
2) Select one critical orifice to calibrate the dry gas meter which best approximates the operating range. Compare the average Delta H from your results page with the Delta H in the orifice table. Input orifice number.
3) Run at 18" Hg vacuum for a period of time necessary to achieve a minimum total volume of 5 cubic feet.
4) Perform three repitiions for the posttest, record readings, shaded columns are automatically calculated.
5) Compare thermocouples to ambient and record as posttest calibration check.

ONSITE METHOD 5 DRY GAS METER AUDIT AND POSTTEST CALIBRATION USING CRITICAL ORIFICE

Client Name	Covanta Energy Group, Inc.
Plant Name	Huntington Resource Recovery Facility
Plant City, State	East Northport, NY
Test Location	Unit 1 FF Outlet
Project Number	13022
Date of Pre-Test	08/26/13
Date of Post-Test	
Tester Signature	David H. Brittle

Meterbox ID	T3	
Meter Delta Ha	1.733	
Meter Y	0.9839	
Reference Pressure	29.9	STATUS
Barometric Pressure	29.9	PASS
Pbar Pretest	29.9	
Pbar Posttest		

ORIFICE ID# INCLUDING SET-#	RUN #	K' FACTOR (AVG)	TESTED VACUUM (in Hg)	DGM READINGS (FT^3) INITIAL	DGM READINGS (FT^3) FINAL	TEMPERATURES °F AMB	DGM INLET INIT	DGM INLET FINAL	DGM OUTLET INIT	DGM OUTLET FINAL	DGM AVG	ELAPSED TIME (MIN) θ	DGM ΔH (in H_2O)	(1) V_m (STD)	(2) V_{cr} (STD)	(3) Y	Y VARIATION (%)	QA STATUS
PRETEST ONSITE 10 MINUTE AUDIT						PRE												
NA	1	NA	NA	840.000	849.415	NA	79	82	79	80	80	12.00	1.73	9.2351	NA	0.9674	1.67	PASS
POSTTEST CHECK		AVERAGE DELTA H =				POST												
	1	#N/A									0			0.0	#N/A	#N/A		
0	2	#N/A	0	0.000		0	0		0		0		0.00	0.0	#N/A	#N/A		
0	3	#N/A	0	0.000		0	0		0		0		0.00	0.0	#N/A	#N/A		
															AVG =	#N/A	#N/A	#N/A

FINAL - INITIAL VOLUMES > 5 CUBIC FEET? FAIL

PRETEST PROCEDURES:

1) Record barometric pressure and temperatures before calibration.
2) Run 10 minute audit at Delta Ha without an orifice.
3) Record ambient temperature and compare all thermocouple readings.
4) Record thermocouple IDs and readings in table.

POSTTEST PROCEDURES:

1) Record barometric pressure before calibration.
2) Select one critical orifice to calibrate the dry gas meter which best approximates the operating range. Compare the average Delta H from your results page with the Delta H in the orifice table. Input orifice number.
3) Run at 18" Hg vacuum for a period of time necessary to achieve a minimum total volume of 5 cubic feet.
4) Perform three repititions for the posttest, record readings, shaded columns are automatically calculated.
5) Compare thermocouples to ambient and record as posttest calibration check.

ONSITE METHOD 5 DRY GAS METER AUDIT AND POSTTEST CALIBRATION USING CRITICAL ORIFICE

Client Name	Covanta Energy Group, Inc.
Plant Name	Huntington Resource Recovery Facility
Plant City, State	East Northport, NY
Test Location	Unit 3 FF Outlet
Project Number	13022
Date of Pre-Test	08/26/13
Date of Post-Test	
Tester Signature	David J. Beitz

Meterbox ID	T4	
Meter Delta Ha	1.630	
Meter Y	1.0077	
Reference Pressure	29.9	STATUS
Barometric Pressure	29.9	PASS
Pbar Pretest	29.9	
Pbar Posttest		

ORIFICE ID# INCLUDING SET-#	RUN #	K' FACTOR (AVG)	TESTED VACUUM (in Hg)	DGM READINGS (FT^3) INITIAL	DGM READINGS (FT^3) FINAL	TEMPERATURES °F AMB	DGM INLET INIT	DGM INLET FINAL	DGM OUTLET INIT	DGM OUTLET FINAL	DGM AVG	ELAPSED TIME (MIN) θ	DGM ΔH (in H_2O)	(1) V_m (STD)	(2) V_{cr} (STD)	(3) Y	Y VARIATION (%)	QA STATUS
PRETEST ONSITE 10 MINUTE AUDIT						PRE												
NA	1	NA	NA	307.800	315.480	NA	89	90	84	85	87	10.00	1.63	7.4350	NA	0.9947	1.29	PASS
POSTTEST CHECK		AVERAGE DELTA H =				POST												
	1	#N/A									0			0.0	#N/A	#N/A		
0	2	#N/A	0	0.000		0	0		0		0		0.00	0.0	#N/A	#N/A		
0	3	#N/A	0	0.000		0	0		0		0		0.00	0.0	#N/A	#N/A		
															AVG =	#N/A	#N/A	#N/A

FINAL - INITIAL VOLUMES > 5 CUBIC FEET? FAIL

PRETEST PROCEDURES:

1) Record barometric pressure and temperatures before calibration.
2) Run 10 minute audit at Delta Ha without an orifice.
3) Record ambient temperature and compare all thermocouple readings.
4) Record thermocouple IDs and readings in table.

POSTTEST PROCEDURES:

1) Record barometric pressure before calibration.
2) Select one critical orifice to calibrate the dry gas meter which best approximates the operating range. Compare the average Delta H from your results page with the Delta H in the orifice table. Input orifice number.
3) Run at 18" Hg vacuum for a period of time necessary to achieve a minimum total volume of 5 cubic feet.
4) Perform three repititions for the posttest, record readings, shaded columns are automatically calculated.
5) Compare thermocouples to ambient and record as posttest calibration check.

ONSITE METHOD 5 DRY GAS METER AUDIT AND POSTTEST CALIBRATION USING CRITICAL ORIFICE

Client Name	Covanta Energy Group, Inc.
Plant Name	Huntington Resource Recovery Facility
Plant City, State	East Northport, NY
Test Location	Unit 3 FF Outlet
Project Number	13022
Date of Pre-Test	08/26/13
Date of Post-Test	
Tester Signature	

Meterbox ID	T5	
Meter Delta Ha	1.812	
Meter Y	1.0150	
Reference Pressure	29.9	STATUS
Barometric Pressure	29.9	PASS
Pbar Pretest	29.9	
Pbar Posttest		

ORIFICE ID# INCLUDING SET-#	RUN #	K' FACTOR (AVG)	TESTED VACUUM (in Hg)	DGM READINGS (FT^3) INITIAL	DGM READINGS (FT^3) FINAL	TEMPERATURES °F AMB	DGM INLET INIT	DGM INLET FINAL	DGM OUTLET INIT	DGM OUTLET FINAL	DGM AVG	ELAPSED TIME (MIN) θ	DGM ΔH (in H_2O)	(1) V_m (STD)	(2) V_{cr} (STD)	(3) Y	Y VARIATION (%)	QA STATUS
PRETEST ONSITE 10 MINUTE AUDIT						PRE												
NA	1	NA	NA	426.950	434.625	NA	88	89	84	85	86.5	10.00	1.81	7.4403	NA	0.9949	1.98	PASS
POSTTEST CHECK		AVERAGE DELTA H =				POST												
	1	#N/A									0			0.0	#N/A	#N/A		
0	2	#N/A	0	0.000		0	0		0		0		0.00	0.0	#N/A	#N/A		
0	3	#N/A	0	0.000		0	0		0		0		0.00	0.0	#N/A	#N/A		
															AVG =	#N/A	#N/A	#N/A

FINAL - INITIAL VOLUMES > 5 CUBIC FEET? FAIL

PRETEST PROCEDURES:

1) Record barometric pressure and temperatures before calibration.
2) Run 10 minute audit at Delta Ha without an orifice.
3) Record ambient temperature and compare all thermocouple readings.
4) Record thermocouple IDs and readings in table.

POSTTEST PROCEDURES:

1) Record barometric pressure before calibration.
2) Select one critical orifice to calibrate the dry gas meter which best approximates the operating range. Compare the average Delta H from your results page with the Delta H in the orifice table. Input orifice number.
3) Run at 18" Hg vacuum for a period of time necessary to achieve a minimum total volume of 5 cubic feet.
4) Perform three repitions for the posttest, record readings, shaded columns are automatically calculated.
5) Compare thermocouples to ambient and record as posttest calibration check.

ONSITE METHOD 5 DRY GAS METER AUDIT AND POSTTEST CALIBRATION USING CRITICAL ORIFICE

Client Name	Covanta Energy Group, Inc.
Plant Name	Huntington Resource Recovery Facility
Plant City, State	East Northport, NY
Test Location	Unit 2 FF Outlet
Project Number	13022
Date of Pre-Test	08/26/13
Date of Post-Test	
Tester Signature	

Meterbox ID	T6	
Meter Delta Ha	1.735	
Meter Y	0.9754	
Reference Pressure	29.9	STATUS
Barometric Pressure	29.9	PASS
Pbar Pretest	29.9	
Pbar Posttest		

ORIFICE ID# INCLUDING SET-#	RUN #	K' FACTOR (AVG)	TESTED VACUUM (in Hg)	DGM READINGS (FT³) INITIAL	DGM READINGS (FT³) FINAL	TEMPERATURES °F AMB	DGM INLET INIT	DGM INLET FINAL	DGM OUTLET INIT	DGM OUTLET FINAL	DGM AVG	ELAPSED TIME (MIN) θ	DGM ΔH (in H_2O)	(1) V_m (STD)	(2) V_{cr} (STD)	(3) Y	Y VARIATION (%)	QA STATUS
PRETEST ONSITE 10 MINUTE AUDIT						PRE												
NA	1	NA	NA	190.000	197.818	NA	90	91	85	86	88	10.00	1.74	7.5567	NA	0.9780	0.27	PASS
POSTTEST CHECK		AVERAGE DELTA H =				POST												
	1	#N/A									0			0.0	#N/A	#N/A		
0	2	#N/A	0	0.000		0	0		0		0		0.00	0.0	#N/A	#N/A		
0	3	#N/A	0	0.000		0	0		0		0		0.00	0.0	#N/A	#N/A		
															AVG =	#N/A	#N/A	#N/A

FINAL - INITIAL VOLUMES > 5 CUBIC FEET? FAIL

PRETEST PROCEDURES:

1) Record barometric pressure and temperatures before calibration.
2) Run 10 minute audit at Delta Ha without an orifice.
3) Record ambient temperature and compare all thermocouple readings.
4) Record thermocouple IDs and readings in table.

POSTTEST PROCEDURES:

1) Record barometric pressure before calibration.
2) Select one critical orifice to calibrate the dry gas meter which best approximates the operating range. Compare the average Delta H from your results page with the Delta H in the orifice table. Input orifice number.
3) Run at 18" Hg vacuum for a period of time necessary to achieve a minimum total volume of 5 cubic feet.
4) Perform three repititions for the posttest, record readings, shaded columns are automatically calculated.
5) Compare thermocouples to ambient and record as posttest calibration check.

THERMOCOUPLE CALIBRATION DATA, °F

DATE	THERMOCOUPLE ID NUMBER	THERMOCOUPLE TEMPERATURE	REFERENCE TEMPERATURE	< or = 2 degrees F DIFFERENCE ??
Dry Gas Meters				
11/22/12	T1 IN	65	65	YES
11/22/12	T1 OUT	65	65	YES
11/22/12	T2 IN	64	65	YES
11/22/12	T2 OUT	64	65	YES
11/22/12	T3 IN	65	65	YES
11/22/12	T3 OUT	65	65	YES
11/22/12	T4 IN	64	65	YES
11/22/12	T4 OUT	64	65	YES
11/22/12	T5 IN	64	65	YES
11/22/12	T5 OUT	64	65	YES
11/22/12	T6 IN	65	65	YES
11/22/12	T6 OUT	65	65	YES
11/22/12	T7 IN	66	65	YES
11/22/12	T7 OUT	66	65	YES
11/22/12	T8 IN	63	65	YES
11/22/12	T8 OUT	63	65	YES
11/22/12	T9 IN	65	65	YES
11/22/12	T9 OUT	65	65	YES
11/27/12	TLF-1 IN	63	64	YES
11/27/12	TLF-1 OUT	63	64	YES
11/27/12	TLF-2 IN	63	64	YES
11/27/12	TLF-2 OUT	63	64	YES
Umbilical Arm Connectors				
11/27/12	G-0	65	64	YES
11/22/12	G-1	65	65	YES
11/27/12	G-2	64	64	YES
11/22/12	G-3	63	65	YES
11/22/12	G-4	63	65	YES
11/27/12	G-5	64	64	YES
11/22/12	G-6	63	65	YES
11/27/12	G-7	63	64	YES
11/27/12	G-8	64	64	YES
11/22/12	G-9	63	65	YES
11/22/12	G-10	63	65	YES
11/22/12	G-11	63	65	YES
11/27/12	G-12	63	64	YES

DATE	THERMOCOUPLE ID NUMBER	THERMOCOUPLE TEMPERATURE	REFERENCE TEMPERATURE	< or = 2 degrees F DIFFERENCE ??
Detachable Thermocouples				
05/07/13	C-1	62	63	YES
05/07/13	C-2	72	73	YES
05/07/13	C-3	72	73	YES
05/07/13	C-4	73	73	YES
05/07/13	C-6	73	73	YES
05/07/13	C-7	73	74	YES
05/07/13	C-8	74	74	YES
05/07/13	C-9	73	73	YES
05/07/13	C-10	60	62	YES
05/07/13	C-11	61	62	YES
05/07/13	C-12	62	62	YES
05/07/13	C-14	71	73	YES
05/07/13	C-16	73	73	YES
05/07/13	C-18	67	68	YES
05/07/13	C-19	74	74	YES
05/07/13	C-21	72	73	YES
05/07/13	C-25	73	73	YES
05/07/13	C-27	74	74	YES
05/07/13	C-28	72	73	YES
05/07/13	C-29	62	63	YES
05/07/13	C-31	72	73	YES
05/07/13	C-32	73	73	YES
05/07/13	C-33	73	73	YES
05/07/13	C-34	73	74	YES
05/07/13	C-35	73	74	YES
05/07/13	C-36	67	68	YES
05/07/13	C-37	68	68	YES
05/07/13	C-38	61	62	YES

DATE	THERMOCOUPLE ID NUMBER	THERMOCOUPLE TEMPERATURE	REFERENCE TEMPERATURE	< or = 2 degrees F DIFFERENCE ??
Probe/Stack Thermocouples				
11/26/12	141	66	65	YES
11/26/12	142	65	65	YES
11/26/12	143	66	65	YES
11/26/12	144	66	65	YES
11/26/12	145	66	65	YES
11/26/12	146	65	65	YES
11/26/12	148	66	65	YES
11/26/12	149	66	65	YES
11/26/12	150	66	65	YES
11/26/12	151	65	65	YES
11/26/12	152	65	65	YES
11/26/12	153	65	65	YES
11/26/12	154	66	65	YES
11/26/12	155	66	65	YES
11/26/12	156	66	65	YES
11/26/12	157	66	65	YES
11/26/12	158	66	65	YES
11/26/12	159	67	65	YES
11/26/12	160	66	65	YES
11/26/12	161	67	65	YES
11/26/12	162	66	65	YES
11/26/12	163	66	65	YES
11/26/12	165	66	65	YES
11/26/12	166	65	65	YES
11/26/12	167	66	65	YES
11/26/12	168	64	65	YES
11/26/12	169	65	65	YES
11/26/12	170	64	65	YES
11/26/12	171	66	65	YES
11/26/12	173	66	65	YES
11/26/12	174	66	65	YES
11/27/12	195	64	64	YES
11/27/12	196	64	64	YES
11/27/12	197	65	65	YES
11/27/12	198	65	65	YES
11/27/12	199	66	65	YES
11/27/12	200	66	65	YES
11/27/12	201	66	65	YES
11/27/12	233	65	65	YES
11/27/12	234	65	65	YES
11/27/12	238	65	65	YES
11/27/12	264	63	64	YES
11/27/12	265	64	64	YES
11/27/12	266	64	64	YES
11/27/12	481	64	64	YES
11/27/12	482	64	64	YES
11/27/12	538	65	65	YES
11/27/12	539	65	65	YES
11/27/12	595	66	65	YES
11/27/12	600	66	65	YES
11/27/12	601	65	65	YES
11/26/12	729	66	65	YES

Environmental Supply Co., Inc.
800-STACKS-5
(782-2575)

PITOT TUBE CALIBRATION – VERIFICATION OF CONSTRUCTION SPECIFICATIONS

Pitot ID: P-158 Date: 3-27-98
Technician: [illegible]

1. D_t external tubing diameter — D_t = .375 inches

$0.188'' < D_t$ 0.375'' *

$\rho_A + \rho_B$ = .950 inches

2. $\rho = \dfrac{\rho_A + \rho_B}{2}$ — ρ = .475 inches

3. $Z = (\rho_A + \rho_B) \sin \gamma$ — γ = 2°

$Z < 0.125''$ ** — Z = 0.033 inches

4. $W = (\rho_A + \rho_B) \sin \sigma$ — σ = Ø°

$W < 0.031''$ ** — W = 0.0 inches

5. $\beta_A, \beta_B < 5°$ ** — β_A = 0°, β_B = 2°

6. $\alpha_A, \alpha_B < 10°$ ** — α_A = 2°, α_B = 0°

*, ** Acceptable Limits.

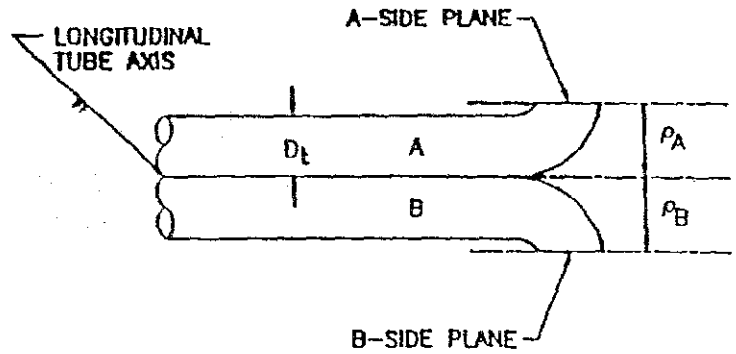

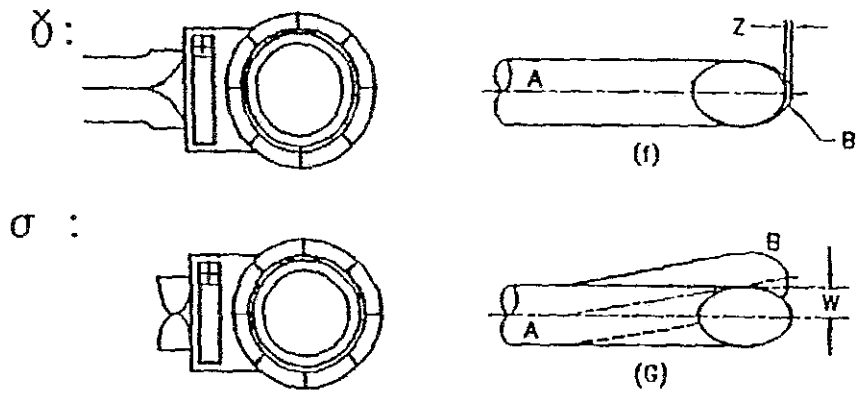

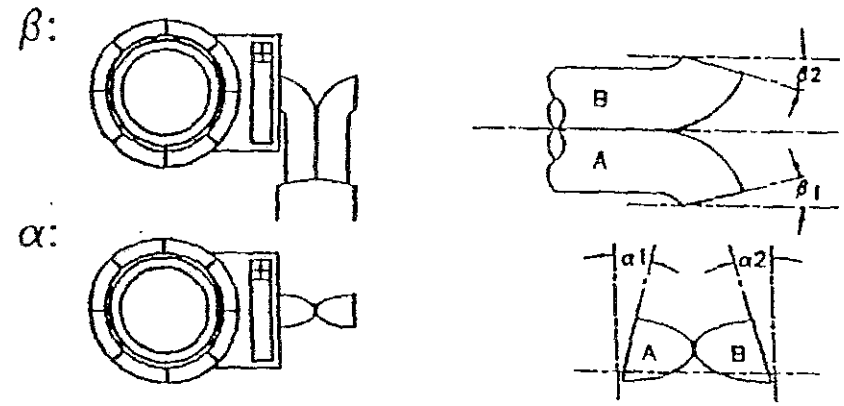

* Standards of Performance for New Stationary Sources, Federal Register, 36 (247), December 23, 1971.

** Valbra, R.F., "The Effects of Impact Opening Misalignment on the Value of the Type–S Pitot Tube Coefficient", U.S. EPA Emission Measurement Branch, Research Triangle Park, N.C., October 1976

Environmental Supply Co., Inc.
ES
800-STACKS-5
(782-2575)

PITOT TUBE CALIBRATION – VERIFICATION OF CONSTRUCTION SPECIFICATIONS

Pitot ID: Y-160 Date: 3-27-96
Technician: MK

1. D_t external tubing diameter — D_t = .375 inches

$0.188" < D_t$ $0.375"$ •

$\rho_A + \rho_B$ = .945 inches

2. $\rho = \frac{\rho_A + \rho_B}{2}$ — ρ = .4725 inches

3. $Z = (\rho_A + \rho_B) \sin \gamma$ — γ = 3 °

$Z < 0.125"$ ••

Z = 0.049 inches

4. $W = (\rho_A + \rho_B) \sin \sigma$ — σ = 1 °

$W < 0.031"$ ••

W = 0.016 inches

5. $\beta_A, \beta_B < 5°$ ••

β_A = 0 °
β_B = 1 °

6. $\alpha_A, \alpha_B < 10°$ ••

α_A = 3 °
α_B = 0 °

•, •• Acceptable Limits.

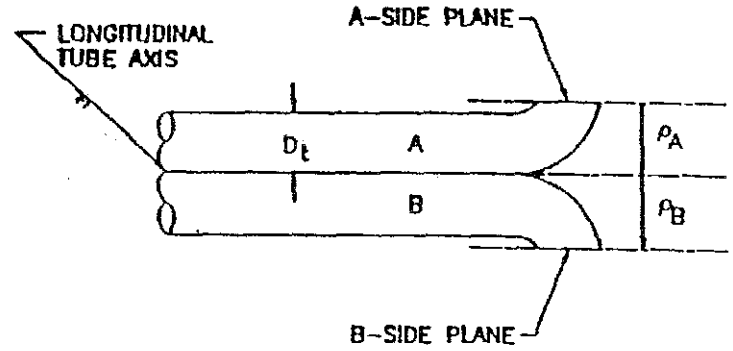

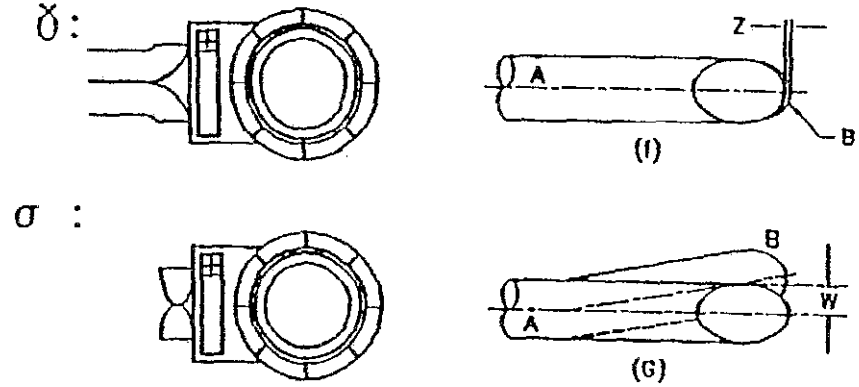

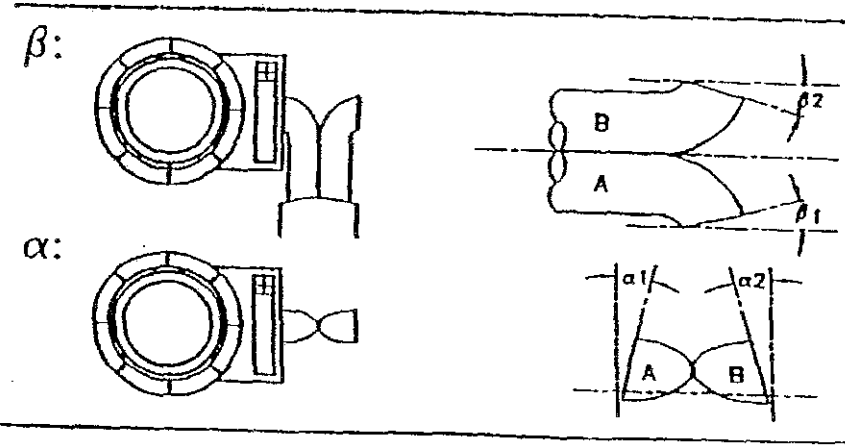

• Standards of Performance for New Stationary Sources, Federal Register, 36 (247), December 23, 1971.

•• Valbra, R.F., "The Effects of Impact Opening Misalignment on the Value of the Type-S Pitot Tube Coefficient", U.S. EPA Emission Measurement Branch, Research Triangle Park, N.C., October 1976

Environmental Supply Co., Inc.
800-STACKS-5
(782-2575)

PITOT TUBE CALIBRATION – VERIFICATION OF CONSTRUCTION SPECIFICATIONS

Pitot ID: P-1161 Date: 3-27-98
Technician: [illegible]

1. D_t external tubing diameter — D_t = .375 inches

$0.188'' < D_t$ 0.375'' *

$\rho_A + \rho_B$ = .953 inches

2. $\rho = \dfrac{\rho_A + \rho_B}{2}$ — ρ = .4765 inches

3. $Z = (\rho_A + \rho_B) \sin \gamma$ — γ = 0°

$Z < 0.125''$ ** — Z = 0.0 inches

4. $W = (\rho_A + \rho_B) \sin \sigma$ — σ = 0°

$W < 0.031''$ ** — W = 0.0 inches

5. $\beta_A, \beta_B < 5°$ ** — β_A = 1°, β_B = 1°

6. $\alpha_A, \alpha_B < 10°$ ** — α_A = 4°, α_B = 3°

*, ** Acceptable Limits.

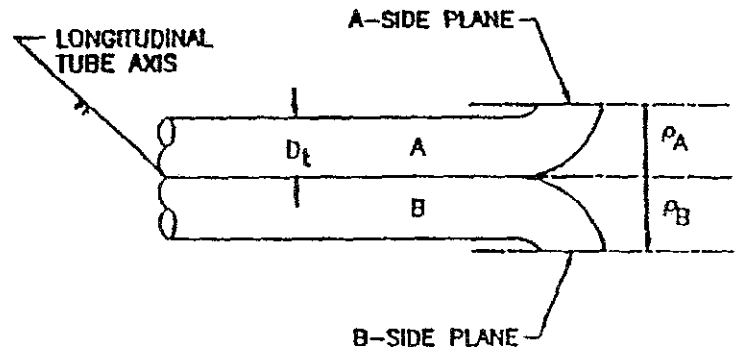

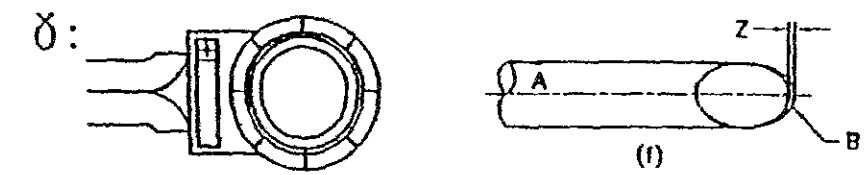

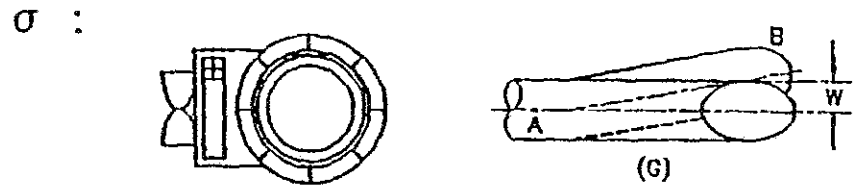

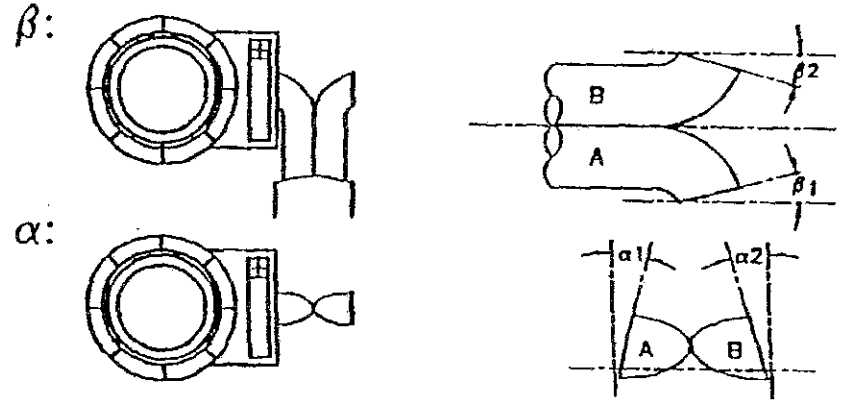

* Standards of Performance for New Stationary Sources, Federal Register, 36 (247), December 23, 1971.

** Valbra, R.F., "The Effects of Impact Opening Misalignment on the Value of the Type–S Pitot Tube Coefficient", U.S. EPA Emission Measurement Branch, Research Triangle Park, N.C., October 1976