RELATIVE ACCURACY TEST AUDIT #10639R

August 2009

PERFORMED FOR:

Covanta Projects, Inc.

at

Huntington Resource Recovery Facility

Units 1, 2, and 3 SDA Inlets and FF Outlets

Huntington, New York

by

TESTAR, Inc.

7424-108 ACC Boulevard

Raleigh, North Carolina 27617

919/957-9500

REPORT CERTIFICATION #10639R

I hereby certify that I have personally examined and am familiar with the information submitted herein. Based upon my own knowledge and my inquiry of those individuals responsible for obtaining the information presented, the foregoing information is true, accurate and complete. I am aware that this information is being requested for the purpose of determining compliance with local, state, and federal laws and may be submitted to appropriate governmental regulatory agencies for those purposes. I am aware that there are significant penalties for submitting false information to such agencies, including the possibility of fine and imprisonment.

Signature _____ Date: 9-28-09

Herbert T. Dixon, Jr., P.E.
Director of Project Management

Professional Engineer, State of North Carolina

Seal Number 023011

TABLE OF CONTENTS

1 Introduction 1-1
1.1 General 1-1
1.2 Test Personnel 1-1
2 Summary of Results 2-1
2.1 Report Organization 2-1
2.2 Presentation of Results 2-1
2.3 PST Procedures and Results for O_2 2-3
2.4 PST Procedures and Results for NOx 2-3
3 Process Description and Operation 3-1
4 Sampling and Analytical Methods 4-1
4.1 Relative Accuracy Test Equipment 4-1
4.2 RATA Test Procedures 4-3
4.3 Moisture and Molecular Weight Determinations 4-4
4.4 Flow Rate Measurements 4-4
5 QA/QC Results 5-1
5.1 QA/QC Policy Procedures 5-1

Appendices:

A. RATA Results 1
B. Reference Method Field Data, (O_2, CO_2, SO_2, NO_x, CO) 50
C. Source CEMS Data Printouts, (O_2, CO_2, SO_2, NO_x, CO) 117
D. Reference Method Field Data, (Moisture, Flow Rate) 178
E. Reference Method Calibration Data 203
F. Source Seven-day Drift Data (NO_x, O_2) 248

LIST OF TABLES

Table 1-1 Test Personnel 1-1
Table 2-1 Relative Accuracy Test Audit Summary 2-2
Table 2-2 Seven-Day Drift Test Results (O_2) 2-3
Table 2-3 Seven-Day Drift Test Results (NOx) 2-4
Table 3-1 Covanta CEMS Analyzers 3-2
Table 4-1 Reference Method Analyzers 4-3
Table 5-1 Summary of QA/QC Procedures 5-1
Table 5-2 Reference Method Calibration Gas Values 5-1

LIST OF FIGURES

Figure 4-1 Reference Measurement System 4-2
Figure 4-2 SDA Inlet Sample Location Diagram 4-5
Figure 4-3 FF Outlet Sample Location Diagram 4-6

1 INTRODUCTION

1.1 General

Covanta Projects, Inc. contracted TESTAR, Inc. to conduct an Annual Relative Accuracy Test Audit on the CEM systems serving the SDA Inlet and FF Outlet of Units 1, 2, and 3. The testing was performed at the Huntington Resource Recovery Facility in Huntington, New York. The relative accuracy test results satisfied the requirements of 40 CFR Part 60, Appendix B and F. The test program was conducted on August 11, 12, and 13, 2009 by TESTAR under the supervision of Mr. Mark Ritchie of Covanta Projects, Inc.

1.2 Test Personnel

Table 1-1 presents the personnel from Covanta and TESTAR that were involved in the testing program.

Table 1-1
Test Personnel

Affiliation	Personnel Responsibility
Covanta Projects, Inc.	Mark Ritchie Test Coordinator
TESTAR, Inc.	Chris Wrenn Project Director
	Bill Harris CEM Operator
	Jeff Aims Field Engineer
	Sean Daley Field Engineer

2 SUMMARY OF RESULTS

2.1 Report Organization

The results of the testing project are summarized in Section 2. The process tested is discussed in Section 3. The sampling and analytical methods utilized are discussed in Section 4 while the Quality Assurance/Quality Control results are presented in Section 5. Appendix A contains detailed results of the testing program. Appendix B contains Reference Method Field Data for O_2, CO_2, SO_2, NO_x and CO. Appendix C contains the Source Data CEMS Printouts for O_2, CO_2, SO_2, NO_x and CO. Appendix D contains the reference method field data used for calculating flow rates and Appendix E contains all reference method calibration data. Appendix F contains the Source Seven-day Drift Data. Refer to the Table of Contents and the List of Tables for a complete reference with appropriate page numbers.

2.2 Presentation of Results

Table 2-1 presents the results of the Relative Accuracy Tests. A more detailed summary of sampling gas parameters is presented in Appendix A.

Table 2-1
Relative Accuracy Test Audit Summary

Parameter	Serial Number	Location	Units	Result	Specification
Oxygen	3335	Unit 1 Inlet	Dry Volume %	0.5%	≤1.0% Absolute Mean Difference[2]
	WO4036 O2	Unit 1 Outlet	Dry Volume %	0.4%	≤1.0% Absolute Mean Difference[2]
Carbon Dioxide	A08-362	Unit 1 Inlet	Dry Volume %	0.1%	≤1.0% Absolute Mean Difference[2]
	A08-361	Unit 1 Outlet	Dry Volume %	0.1%	≤1.0% Absolute Mean Difference[2]
Sulfur Dioxide	AX-921-9646-2	Unit 1 Inlet	ppm @ 7% O_2	9.3%	≤20% Relative Accuracy[1]
	AX-921-9646-1	Unit 1 Outlet	ppm @ 7% O_2	0.0%	≤20% of applicable Standard[1]
Nitrogen Oxides	WO4036 NOx	Unit 1 Outlet	ppm @ 7% O_2	1.6%	≤20% Relative Accuracy[1]
			lb NO_x/hr	7.1%	≤20% Relative Accuracy[4]
Carbon Monoxide	0636119863H	Unit 1 Outlet High	ppm @ 7% O_2	4.3%	≤10% Relative Accuracy[3]
	0636119863L	Unit 1 Outlet Low	ppm @ 7% O_2	2.6%	≤10% Relative Accuracy[3]
Oxygen	3337	Unit 2 Inlet	Dry Volume %	0.4%	≤1.0% Absolute Mean Difference[2]
	WO4037 O2	Unit 2 Outlet	Dry Volume %	0.3%	≤1.0% Absolute Mean Difference[2]
Carbon Dioxide	A08-369	Unit 2 Inlet	Dry Volume %	0.7%	≤1.0% Absolute Mean Difference[2]
	A08-363	Unit 2 Outlet	Dry Volume %	0.1%	≤1.0% Absolute Mean Difference[2]
Sulfur Dioxide	AX-921-9646-4	Unit 2 Inlet	ppm @ 7% O_2	7.1%	≤20% Relative Accuracy[1]
	AX-921-9646-3	Unit 2 Outlet	ppm @ 7% O_2	0.0%	≤20% of applicable Standard[1]
Nitrogen Oxides	WO4037 NOx	Unit 2 Outlet	ppm @ 7% O_2	8.3%	≤20% Relative Accuracy[1]
			lb NO_x/hr	4.2%	≤20% Relative Accuracy[4]
Carbon Monoxide	0636119864H	Unit 2 Outlet High	ppm @ 7% O_2	4.8%	≤10% Relative Accuracy[3]
	0636119864L	Unit 2 Outlet Low	ppm @ 7% O_2	6.7%	≤10% Relative Accuracy[3]
Oxygen	3343	Unit 3 Inlet	Dry Volume %	0.6%	≤1.0% Absolute Mean Difference[2]
	WO4038 O2	Unit 3 Outlet	Dry Volume %	0.4%	≤1.0% Absolute Mean Difference[2]
Carbon Dioxide	A08-367	Unit 3 Inlet	Dry Volume %	0.0%	≤1.0% Absolute Mean Difference[2]
	A08-368	Unit 3 Outlet	Dry Volume %	0.2%	≤1.0% Absolute Mean Difference[2]
Sulfur Dioxide	AX-921-9646-6	Unit 3 Inlet	ppm @ 7% O_2	7.0%	≤20% Relative Accuracy[1]
	AX-921-9646-5	Unit 3 Outlet	ppm @ 7% O_2	2.8%	≤20% of applicable Standard[1]
Nitrogen Oxides	WO4038 NOx	Unit 3 Outlet	ppm @ 7% O_2	8.3%	≤20% Relative Accuracy[1]
			lb NO_x/hr	2.0%	≤20% Relative Accuracy[4]
Carbon Monoxide	0636119865H	Unit 3 Outlet High	ppm @ 7% O_2	3.4%	≤10% Relative Accuracy[3]
	0636119865L	Unit 3 Outlet Low	ppm @ 7% O_2	4.8%	≤10% Relative Accuracy[3]

1 40CFR60, Appendix B, Performance Specification 2 for NO_x and SO_2, Section 13.2.
2 40CFR60, Appendix B, Performance Specification 3 for O_2 and CO_2, Section 13.2.
3 40CFR60, Appendix B, Performance Specification 4A for CO, Section 13.2
4 40CFR60, Appendix B, Performance Specification 6 for Continuous Emission Rate Monitoring Systems, Section 13.2.

2.3 PST Procedures and Results for O_2

Table 2-2 presents the results of the Seven-Day Drift Tests conducted on the SDA Inlet O_2 and FF Outlet O_2 analyzers installed on Units 1, 2, and 3.

The zero and span calibration drift was recorded every twenty-four hours for seven consecutive days on each analyzer (168 hours) with the boilers operating at >50% load. The calibration drift test was conducted during which no maintenance, repair, or adjustment took place.

The PST for O_2 analyzers states that the CEMS calibration must not drift or deviate from the reference value of the gas cylinder, gas cell, or optical filter by more than 0.5 percent O_2.

Table 2-2
Seven-Day Drift Test Results (O_2)

Parameter	Location	Date	Units	Maximum Drift	Specification
O_2 (zero) O_2 (Span)	Unit 1 Inlet	07/25/09- 07/31/09	Dry Volume % Dry Volume %	0.1% 0.3%	≤0.5% O_2
O_2 (zero) O_2 (Span)	Unit 1 Outlet	07/15/09- 07/21/09	Dry Volume % Dry Volume %	0.0% 0.2%	≤0.5% O_2
O_2 (zero) O_2 (Span)	Unit 2 Inlet	07/25/09- 07/31/09	Dry Volume % Dry Volume %	0.1% 0.3%	≤0.5% O_2
O_2 (zero) O_2 (Span)	Unit 2 Outlet	07/09/09- 07/15/09	Dry Volume % Dry Volume %	0.2% 0.3%	≤0.5% O_2
O_2 (zero) O_2 (Span)	Unit 3 Inlet	07/25/09- 07/31/09	Dry Volume % Dry Volume %	0.1% 0.1%	≤0.5% O_2
O_2 (zero) O_2 (Span)	Unit 3 Outlet	07/15/09- 07/21/09	Dry Volume % Dry Volume %	0.1% 0.3%	≤0.5% O_2

2.4 PST Procedures and Results for NOx

Table 2-3 presents the results of the Seven-Day Drift Test conducted on the FF Outlet NOx analyzers installed on Units 1, 2, and 3.

The zero and span calibration drift was recorded every twenty-four hours for seven consecutive days on each analyzer (168 hours) with the boilers operating at >50% load. The calibration drift test was conducted during which no maintenance, repair, or adjustment took place.

The PST for NOx analyzers states that the CEMS calibration must not drift or deviate from the reference value of the gas cylinder, gas cell, or optical filter by more than 2.5 percent of the span value for 6 of 7 days.

Table 2-3
Seven-Day Drift Test Results (NOx)

Parameter	Location	Date	Units	Maximum Drift	Specification
NOx (zero)	Unit 1 Outlet	07/15/09-	ppm	0.1%	≤2.5% of Span
NOx (Span)		07/21/09	ppm	0.4%	
NOx (zero)	Unit 2 Outlet	07/09/09-	ppm	0.1%	≤2.5% of Span
NOx (Span)		07/15/09	ppm	1.0%	
NOx (zero)	Unit 3 Outlet	07/23/09-	ppm	0.1%	≤2.5% of Span
NOx (Span)		07/29/09	ppm	1.0%	

3 PROCESS DESCRIPTION AND OPERATION

The Huntington Resource Recovery Facility processes up to 350,000 tons of solid waste each year, generating up to 27.5 megawatts of electricity. The facility was designed and built and is owned and operated by Covanta Projects, of Huntington, Inc. Each of the three (3) Martin GmbH waterwall furnaces has a nominal design capacity of 250 tons of waste per day. Waste is combusted at furnace temperatures exceeding 1,800 degrees Fahrenheit and reduced to an inert ash residue. Before leaving the facility, combustion air is directed through technologically advanced air pollution control equipment consisting of spray dryer absorbers (SDA) and fabric filter (FF) baghouses. Each boiler is also equipped with an ammonia-based selective non-catalytic reduction (SNCR) system for control of NOx emissions and dry activated carbon injection to reduce mercury emissions.

The CEMS serving Units 1, 2, and 3 consist of SO_2, NO_x, CO, O_2, and CO_2 analyzers, a dry extractive sampling system, opacity monitors, and a microcomputer based DAS. Descriptions of the analyzers are listed in **Table 3-1**.

Table 3-1
Covanta CEMS Analyzers

Pollutant Monitor	Unit	Location	Range	Analyzer	Serial Number
SO_2	1	Inlet	0-500 ppm	Western Research 921	AX-921-9646-2
O_2	1	Inlet	0-25%	Servomex 1420	3335
CO_2	1	Inlet	0-20%	Siemens Ultramat	A08-362
CO	1	Stack	0-2000 ppm 0-200 ppm	TECO 48i	0636119863
SO_2	1	Stack	0-200 ppm	Western Research 921	AX-921-9646-1
NO_x	1	Stack	0-500 ppm	California Analytical 650	WO4036 NOx
CO_2	1	Stack	0-20 %	Siemens Ultramat	A08-361
O_2	1	Stack	0-25 %	California Analytical 650	WO4036 O2
SO_2	2	Inlet	0-500 ppm	Western Research 921	AX-921-9646-4
O_2	2	Inlet	0-25%	Servomex 1420	3337
CO_2	2	Inlet	0-20%	Siemens Ultramat	A08-369
CO	2	Stack	0-2000 ppm 0-200 ppm	TECO 48i	0636119864
SO_2	2	Stack	0-200 ppm	Western Research 921	AX-921-9646-3
NO_x	2	Stack	0-500 ppm	California Analytical 650	WO4037 NOx
CO_2	2	Stack	0-20 %	Siemens Ultramat	A08-363
O_2	2	Stack	0-25 %	California Analytical 650	WO4037 O2
SO_2	3	Inlet	0-500 ppm	Western Research 921	AX-921-9646-6
O_2	3	Inlet	0-25%	Servomex 1420	3343
CO_2	3	Inlet	0-20%	Siemens Ultramat	A08-367
CO	3	Stack	0-2000 ppm 0-200 ppm	TECO 48i	0636119865
SO_2	3	Stack	0-200 ppm	Western Research 921	AX-921-9646-5
NO_x	3	Stack	0-500 ppm	California Analytical 650	WO4038 NOx
CO_2	3	Stack	0-20 %	Siemens Ultramat	A08-368
O_2	3	Stack	0-25 %	California Analytical 650	WO4038 O2

4 SAMPLING AND ANALYTICAL METHODS

TESTAR, Inc. was contracted to conduct a Relative Accuracy Test Audit on the CEM systems installed on the inlet and outlet of Units 1, 2, and 3. The testing was performed on the Covanta of Huntington CEMS.

4.1 Relative Accuracy Test Equipment

TESTAR's extractive measurement system and all sampling and data reduction procedures conform with the requirements of 40 CFR 60, Appendix B, Performance Specifications 2, 3, and 4A, and EPA Methods 3A, 6C, 7E, and 10 of 40 CFR 60, and the Quality Assurance Procedures of Appendix F. **Figure 4-1** presents a schematic of the reference measurement systems that was used at the test locations.

The effluent gas sample is conditioned to eliminate interference from water vapor and particulate matter before being introduced into each analyzer. All components of the sampling system that contact the sample are glass, stainless steel, or Teflon. A heated probe and particulate filter, heated sample lines, primary moisture removal trap, sample pump, secondary moisture removal system and distribution manifold board are used to deliver a sample of flue gas to the analyzers. The sampling probe and filter housing is constructed of Type 316 stainless steel and is heated to maintain the sample temperature above the dew point.

The condenser is an ice bath, Teflon or glass coil condenser that provides excellent condensate separation and optimum drying of the sample gas. A peristaltic pump continuously removes condensate from the Teflon coil.

The dry sample exiting the condenser is then transported through unheated 3/8-inch O.D. Teflon tubing by way of a Teflon-lined sample pump to the flow distribution manifold board, where the flow to the analyzers is monitored and controlled.

A three-way valve located on the manifold board delivers calibration gas to two locations: (1) immediately upstream of the analyzers for calibration error checks, and (2) at the outlet of the probe for the sampling system bias and calibration drift checks.

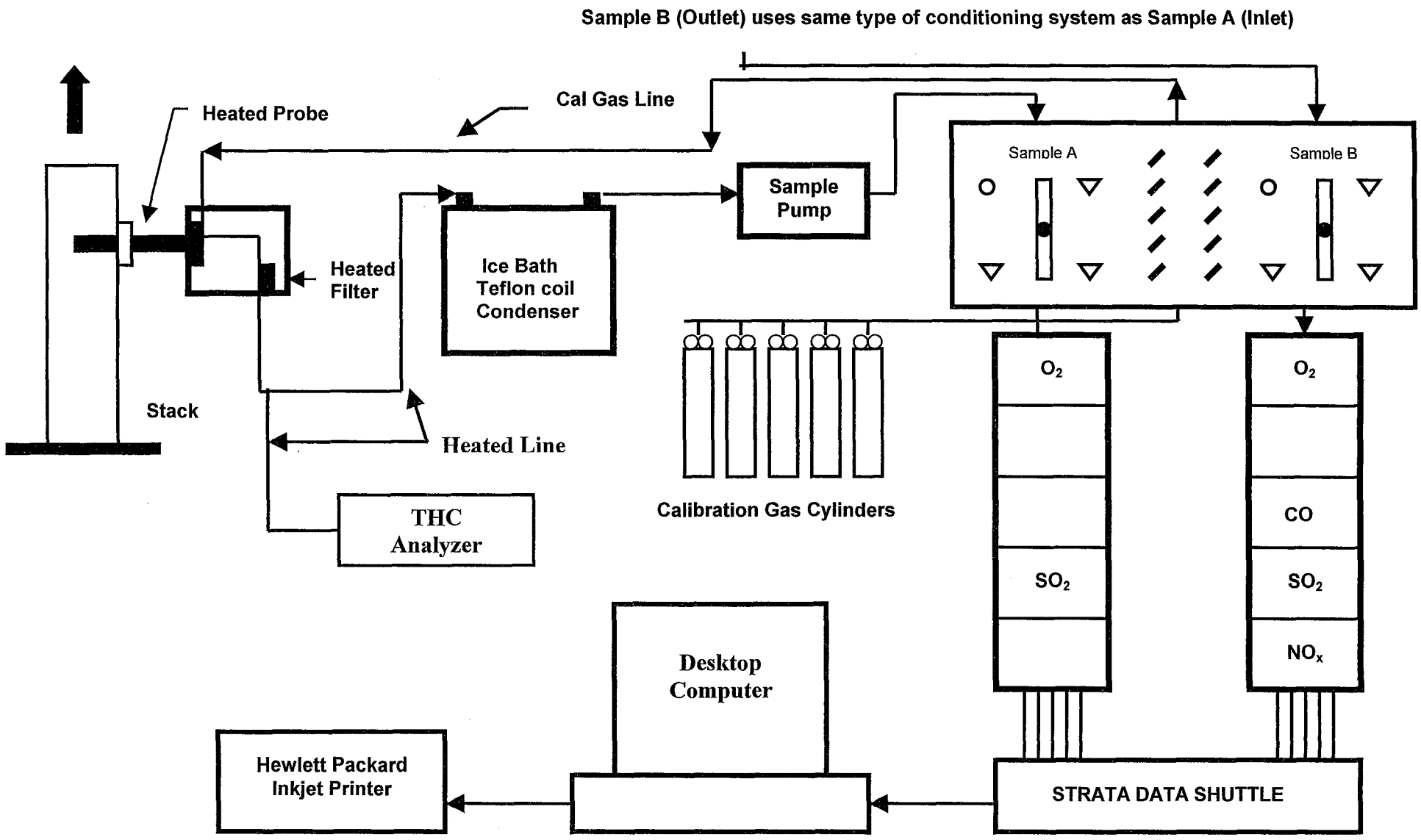

Figure 4-1. TESTAR Reference Method CEM System

Table 4-1 lists the gas analyzers that will be used during this test program.

Table 4-1
Reference Method Analyzers

Parameter	Analyzer	Model	Serial Number	Range	Operational Principle
SO_2 Inlet	Bovar	721M	721M-8062-2	0-500ppm	Ultraviolet Differential Absorption
SO_2 Outlet	Bovar	721M	721M-8064-6	0-100ppm	Ultraviolet Differential Absorption
O_2 Inlet	California Analytical	100P	8K12007	0-25%	Paramagnetic
O_2 Outlet	Servomex	1420B	1420/B175	0-25%	Paramagnetic
CO_2 Outlet	California Analytical	ZRH	A6J836T	0-20%	NDIR
CO_2 Inlet	Teledyne API	300M	224	0-20%	NDIR
CO Outlet	Thermo Environmental	48CHL	48CHL-60783-326	0-100ppm	Gas Filter Correlation
NO_x Outlet	Thermo Environmental	10S	10S-45502-274	0-500ppm	Chemiluminescence

4.2 RATA Test Procedures

The reference test method procedures used for the RATA test program are instrumental test methods. They were conducted in accordance with 40 CFR 60, Appendix B, Performance Specifications 2, 3, and 4A and Appendix F. Relative accuracies were calculated on a percent basis. To satisfy the RATA requirements of 40 CFR 60, Appendix B, the relative accuracy must not exceed 20.0 percent of the mean of the reference method or 10.0 percent of the applicable standard for NO_x, must not exceed 20.0 percent of the mean of the reference method or 20.0 percent of the applicable standard (low emitter) for SO_2, must not exceed 10.0 percent of the mean of the reference method, 5.0 percent of the applicable standard, or an absolute difference of $\pm$5ppm plus the confidence coefficient for CO. The relative accuracy of an O_2 or CO_2 analyzer must not exceed an absolute mean difference of $\pm$1.0 percent.

TESTAR, Inc. conducted the relative accuracy tests. The RATA was conducted while each unit operated at greater than 50% of capacity.

The traverse sampling points were located so as to establish a "measurement line" through the centroidal area of the duct. The test points for the relative accuracy tests were located at 16.7%, 50.0%, and 83.3% of the internal diameter of the duct. **Figure 4-2** presents a schematic of the sampling point locations for the SDA inlet **Figure 4-3** presents a schematic of the sampling point locations for the FF outlet.

TESTAR used EPA Test Methods 3A, 6C, 7E, and 10 as the reference methods for measuring O_2, CO_2, SO_2, NO_x, and CO. These methods are instrumental procedures. A sample is continuously extracted from the effluent stack gas stream. A portion of the sample stream is conveyed to each analyzer for the determination of O_2, CO_2, SO_2, NO_x, and CO.

For each EPA Reference Method determination, the flue gas was sampled at three traverse points. The difference between the reference method sample and the monitor's reading was evaluated from a minimum of nine test runs.

4.3 Moisture and Molecular Weight Determinations

EPA Method 3 was used to determine the flue gas molecular weight (including oxygen and carbon dioxide). EPA Method 4 was used to determine the flue gas moisture content. Data from EPA Methods 3 and 4 were used to calculate the volumetric flow rate of the stack gas. The volumetric flow rate was then used to calculate lbs NO_x/hr.

4.4 Flow Rate Measurements

Moisture and volumetric flow rate data were taken from sampling trains running simultaneously with each RATA test including EPA Methods 4, 8, and 316. The sampling trains consisted of a glass nozzle, a heated glass probe, a heated filter, four to six chilled impingers, and a dry gas metering console. At the end of each test run, the moisture was measured and a volumetric flow rate was calculated.

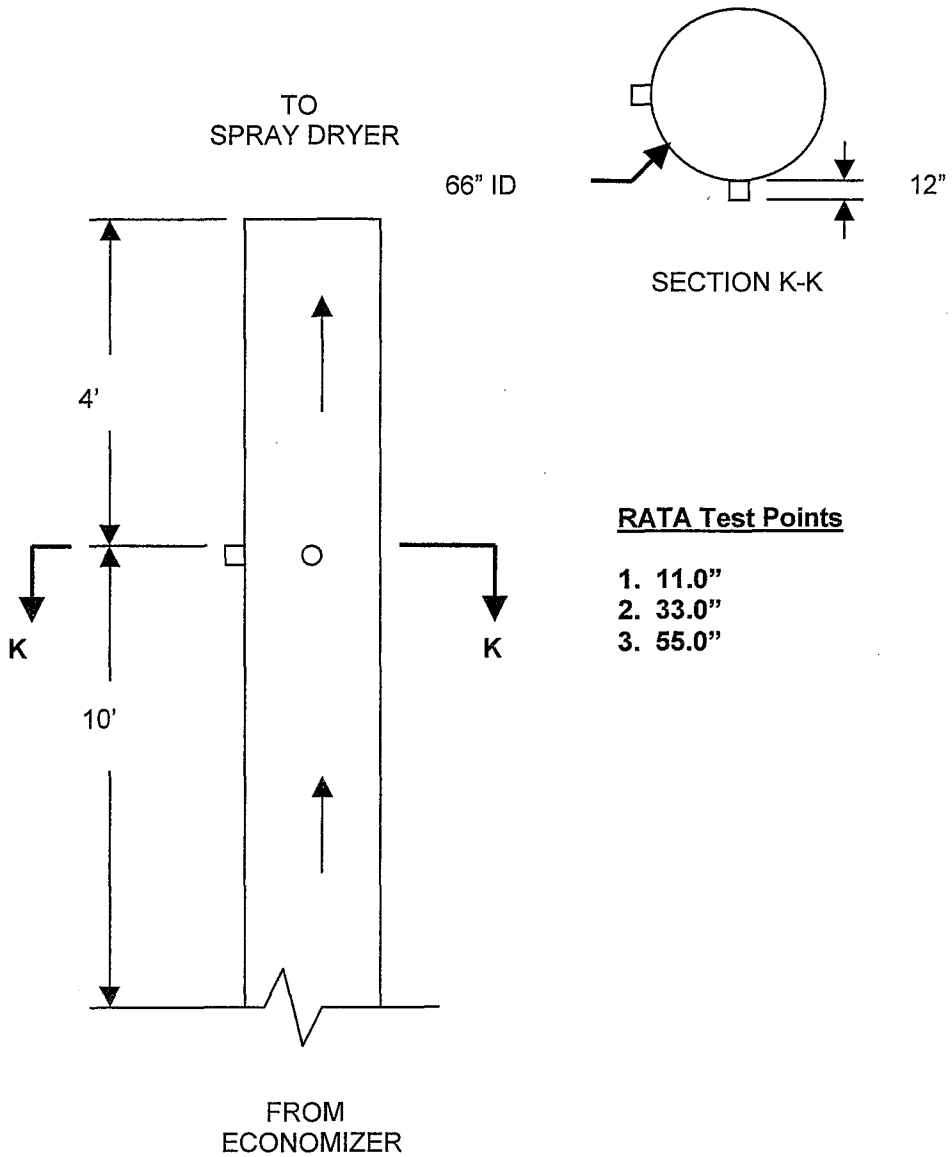

Figure 4-2. SDA Inlet Sampling Location
(Units 1, 2, & 3 are identical)

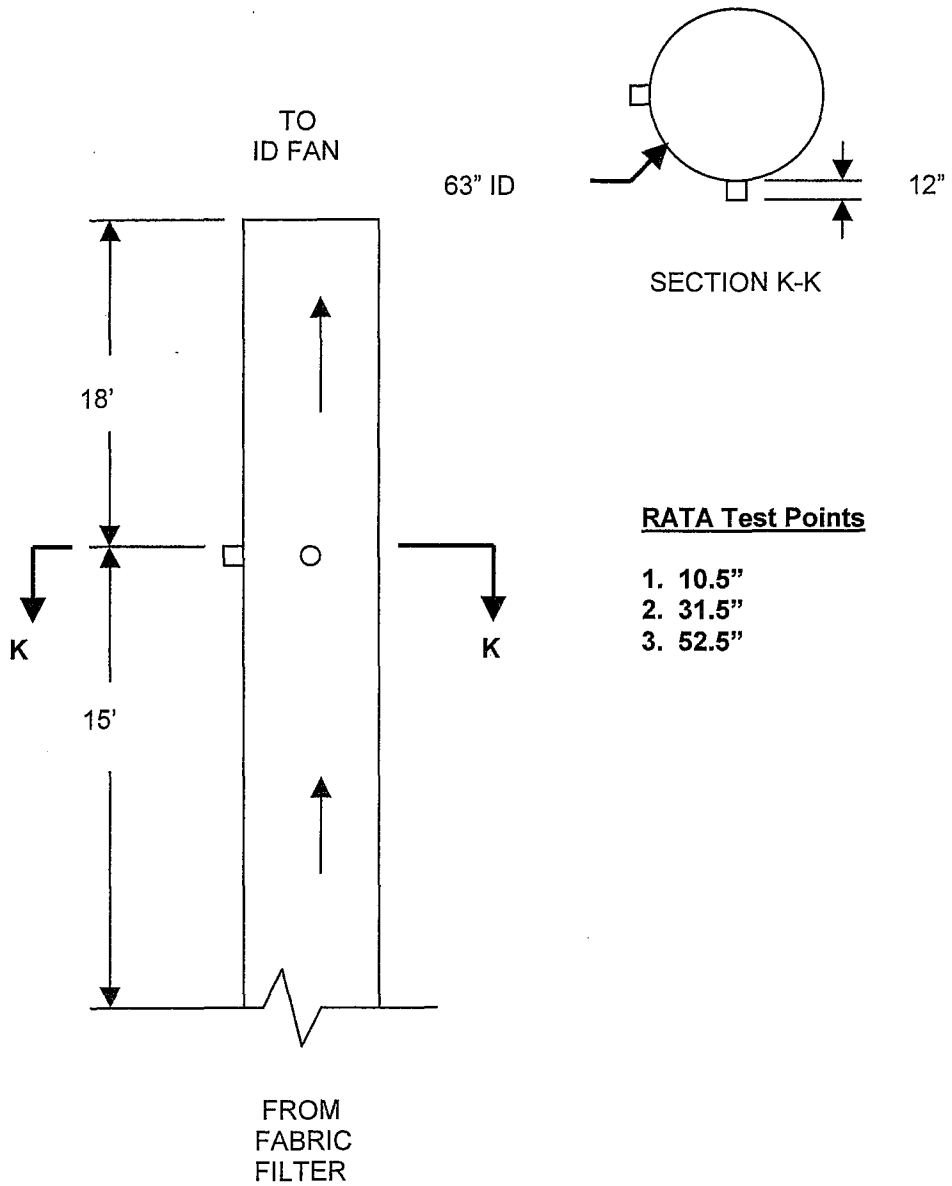

Figure 4-3. Fabric Filter Outlet Sampling Location (Units 1, 2, & 3 are identical)

5 QA/QC RESULTS

5.1 QA/QC Policy Procedures

The calibration and quality assurance procedures of EPA Methods 3A, 6C, 7E, and 10 were followed throughout the test program and are summarized in Table 5-1. The results of sampling system bias and calibration drift tests for each test run are calculated and presented in Appendix B. The cylinder gas manufacturer's analyses of the O_2, CO_2, SO_2, NO_x, and CO calibration gases were conducted according to EPA Protocol 1 requirements. The certificates of analysis are included in the test report. A summary of the calibration gases used during the test program is presented in Table 5-2.

Table 5-1
Summary of QA/QC Procedures

Test Method	QA/QC Procedure	QA/QC Objective	QA/QC Results	Status of QA/QC
EPA M3A, 6C, 7E and 10	Initial Calibration Error Test	< ±2%	< ±2%	Acceptable
	System Bias Test	< ±5%	< ±5%	Acceptable
	Drift Test	< ±3%	< ±3%	Acceptable
	Leak Check	<2% of average flow	0.0%	Acceptable
	Response Time	NA	71 seconds	Acceptable
Outlet Post-test	NOx Converter Checks	>90% Conversion Eff	99.4%	Acceptable

Table 5-2
Reference Method Calibration Gas Values

Parameter	Span Level	Calibration Gas Value	Calibration Gas Serial Number
Oxygen	Mid	9.934%	XC033526B
	High	21.9%	SG895387ALB
Carbon Dioxide	Mid	8.87%	XC033526B
	High	17.79%	SG895387ALB
Sulfur Dioxide Outlet	Mid	46.4ppm	CC41281
	High	91.63ppm	CC61542
Sulfur Dioxide Inlet	Mid	236.9ppm	CC129649
	High	490.7ppm	XC022664B
Nitrogen Dioxide	Converter Gas	50.51ppm	FF837
Nitrogen Oxides	Mid	241.1ppm	CC21496
	High	482.4ppm	FF747
Carbon Monoxide	Mid	45.07ppm	SG9113307BAL
	High	89.29ppm	FF43261

APPENDIX A
Relative Accuracy Results

Relative Accuracy - 40CFR60, Appendix B, Performance Specification 3
Oxygen

Client:	Covanta Projects, Inc.	Project #:	10639
Facility:	Huntington RRF	Operator:	WHH
Test Location:	Unit 1 SDA Inlet		
Analyzer:	Servomex 1420		
Serial Number:	3335		
App. Standard:	NA		
Parameter Units:	percent, %		

Test Run #	Test Date	Test Start Time	Test Stop Time	Reference Method Result	Facility CEM Result	Test Status	Difference (Ref-Fac)	Difference Squared
1	8/13/09	823	847	11.726	11.0	valid	0.726	0.527
2	8/13/09	859	923	11.327	10.4	valid	0.927	0.859
3	8/13/09	936	1000	11.742	10.9	valid	0.842	0.709
4	8/13/09	1009	1034	11.746	10.7	void		
5	8/13/09	1045	1109	11.479	11.1	valid	0.379	0.144
6	8/13/09	1124	1148	10.956	10.8	valid	0.156	0.024
7	8/13/09	1159	1223	11.531	11.3	valid	0.231	0.053
8	8/13/09	1234	1258	11.095	10.8	valid	0.295	0.087
9	8/13/09	1309	1333	11.194	10.9	valid	0.294	0.086
10	8/13/09	1344	1408	11.190	10.8	valid	0.390	0.152
11						invalid		
			Averages:	11.360	10.889		0.471	

Standard Deviation	0.2839
Number of Tests	9
t-value	2.306
Confidence Coefficient	0.2182

Absolute Difference = 0.5

Relative Accuracy - 40CFR60, Appendix B, Performance Specification 3
Carbon Dioxide

Client:	Covanta Projects, Inc.	Project #:	10639
Facility:	Huntington RRF	Operator:	WHH
Test Location:	Unit 1 SDA Inlet		
Analyzer:	Siemens Ultramat 21P		
Serial Number:	A08-362		
App. Standard:	NA		
Parameter Units:	percent, %		

Test Run #	Test Date	Test Start Time	Test Stop Time	Reference Method Result	Facility CEM Result	Test Status	Difference (Ref-Fac)	Difference Squared
1	8/13/09	823	847	8.645	8.7	valid	-0.055	0.003
2	8/13/09	859	923	8.855	9.2	valid	-0.345	0.119
3	8/13/09	936	1000	8.573	9.0	void		
4	8/13/09	1009	1034	8.871	9.0	valid	-0.129	0.017
5	8/13/09	1045	1109	8.704	8.6	valid	0.104	0.011
6	8/13/09	1124	1148	8.954	9.0	valid	-0.046	0.002
7	8/13/09	1159	1223	8.785	8.6	valid	0.185	0.034
8	8/13/09	1234	1258	8.933	9.1	valid	-0.167	0.028
9	8/13/09	1309	1333	8.852	8.9	valid	-0.048	0.002
10	8/13/09	1344	1408	8.930	8.9	valid	0.030	0.001
11						invalid		
			Averages:	8.837	8.889		-0.052	

Standard Deviation	0.1550
Number of Tests	9
t-value	2.306
Confidence Coefficient	0.1192

Absolute Difference = 0.1

Relative Accuracy - 40CFR60, Appendix B, Performance Specification 2
Sulfur Dioxide

Client:	Covanta Projects, Inc.	Project #:	10639
Facility:	Huntington RRF	Operator:	WHH
Test Location:	Unit 1 SDA Inlet		
Analyzer:	Western Research 921		
Serial Number:	AX-921-9646-2		
App. Standard:	NA		
Parameter Units:	ppm@7%O2		

Test Run #	Test Date	Test Start Time	Test Stop Time	Reference Method Result	Facility CEM Result	Test Status	Difference (Ref-Fac)	Difference Squared
1	8/13/09	823	847	53.788	60	valid	-6.212	38.590
2	8/13/09	859	923	44.242	42	valid	2.242	5.029
3	8/13/09	936	1000	40.889	41	valid	-0.111	0.012
4	8/13/09	1009	1034	68.650	73	valid	-4.350	18.925
5	8/13/09	1045	1109	36.369	43	void		
6	8/13/09	1124	1148	46.408	50	valid	-3.592	12.903
7	8/13/09	1159	1223	41.675	43	valid	-1.325	1.756
8	8/13/09	1234	1258	34.335	37	valid	-2.665	7.100
9	8/13/09	1309	1333	36.662	38	valid	-1.338	1.791
10	8/13/09	1344	1408	39.882	43	valid	-3.118	9.722
11						invalid		
			Averages:	45.170	47.444		-2.274	

Standard Deviation	2.4819
Number of Tests	9
t-value	2.306
Confidence Coefficient	1.9077

Relative Accuracy % of Reference Method: 9.3

EMISSION RATE DATA SUMMARY

Client Name	Covanta Projects, Inc.	**Operator**	WHH
Plant Name	Huntington RRF	**Project #**	10639
Sampling Location	Unit 1 SDA Inlet		

Run Number		1	2	3	4
Run Date		8/13/09	8/13/09	8/13/09	8/13/09
Run Start Time	hh:mm	823	859	936	1009
Run Stop Time	hh:mm	847	923	1000	1034
Carbon Dioxide Percentage	% CO_2	8.645	8.855	8.573	8.871
Oxygen Percentage	% O_2	11.726	11.327	11.742	11.746

Sulfur Dioxide					
Formula Weight	Fwt	64.06	64.06	64.06	64.06
Concentration, ppm (dry)	ppmvd	35.500	30.470	26.940	45.210
Concentration, ppm@7%O2	ppm@7%O2	53.788	44.242	40.889	68.650

EMISSION RATE DATA SUMMARY

Client Name	Covanta Projects, Inc.	**Operator**	WHH
Plant Name	Huntington RRF	**Project #**	10639
Sampling Location	Unit 1 SDA Inlet		

Run Number		5	6	7	8
Run Date		8/13/09	8/13/09	8/13/09	8/13/09
Run Start Time	hh:mm	1045	1124	1159	1234
Run Stop Time	hh:mm	1109	1148	1223	1258
Carbon Dioxide Percentage	% CO_2	8.704	8.954	8.785	8.933
Oxygen Percentage	% O_2	11.479	10.956	11.531	11.095

Sulfur Dioxide					
Formula Weight	Fwt	64.06	64.06	64.06	64.06
Concentration, ppm (dry)	ppmvd	24.650	33.200	28.090	24.220
Concentration, ppm@7%O2	ppm@7%O2	36.369	46.408	41.675	34.335

EMISSION RATE DATA SUMMARY

Client Name	Covanta Projects, Inc.	**Operator**	WHH
Plant Name	Huntington RRF	**Project #**	10639
Sampling Location	Unit 1 SDA Inlet		

Run Number		9	10		
Run Date		8/13/09	8/13/09		
Run Start Time	hh:mm	1309	1344		
Run Stop Time	hh:mm	1333	1408		
Carbon Dioxide Percentage	% CO_2	8.852	8.930		
Oxygen Percentage	% O_2	11.194	11.190		

Sulfur Dioxide					
Formula Weight	Fwt	64.06	64.06		
Concentration, ppm (dry)	ppmvd	25.600	27.860		
Concentration, ppm@7%O2	ppm@7%O2	36.662	39.882		

Relative Accuracy - 40CFR60, Appendix B, Performance Specification 3
Oxygen

Client:	Covanta Projects, Inc.	Project #:	10639
Facility:	Huntington RRF	Operator:	WHH
Test Location:	Unit 1 FF Outlet		
Analyzer:	California Analytical 650		
Serial Number:	W04036-O2		
App. Standard:	NA		
Parameter Units:	percent, %		

Test Run #	Test Date	Test Start Time	Test Stop Time	Reference Method Result	Facility CEM Result	Test Status	Difference (Ref-Fac)	Difference Squared
1	8/13/09	823	847	11.897	12.3	valid	-0.403	0.162
2	8/13/09	859	923	11.366	11.7	valid	-0.334	0.112
3	8/13/09	936	1000	11.887	12.1	valid	-0.213	0.045
4	8/13/09	1009	1034	12.008	12.0	valid	0.008	0.000
5	8/13/09	1045	1109	12.010	12.3	valid	-0.290	0.084
6	8/13/09	1124	1148	11.453	12.0	void		
7	8/13/09	1159	1223	11.870	12.4	valid	-0.530	0.281
8	8/13/09	1234	1258	11.515	12.0	valid	-0.485	0.235
9	8/13/09	1309	1333	11.552	12.1	valid	-0.548	0.300
10	8/13/09	1344	1408	11.490	12.0	valid	-0.510	0.260
11						invalid		
			Averages:	11.733	12.100		-0.367	

Standard Deviation	0.1825
Number of Tests	9
t-value	2.306
Confidence Coefficient	0.1403

Absolute Difference = 0.4

Relative Accuracy - 40CFR60, Appendix B, Performance Specification 3
Carbon Dioxide

Client:	Covanta Projects, Inc.	Project #:	10639
Facility:	Huntington RRF	Operator:	WHH
Test Location:	Unit 1 FF Outlet		
Analyzer:	Siemens Ultramat 21P		
Serial Number:	A08-361		
App. Standard:	NA		
Parameter Units:	percent, %		

Test Run #	Test Date	Test Start Time	Test Stop Time	Reference Method Result	Facility CEM Result	Test Status	Difference (Ref-Fac)	Difference Squared
1	8/13/09	823	847	7.781	7.7	valid	0.081	0.007
2	8/13/09	859	923	8.297	8.2	valid	0.097	0.009
3	8/13/09	936	1000	8.163	8.0	valid	0.163	0.027
4	8/13/09	1009	1034	8.397	8.0	void		
5	8/13/09	1045	1109	8.081	7.7	valid	0.381	0.145
6	8/13/09	1124	1148	8.099	8.0	valid	0.099	0.010
7	8/13/09	1159	1223	7.821	7.7	valid	0.121	0.015
8	8/13/09	1234	1258	8.175	8.1	valid	0.075	0.006
9	8/13/09	1309	1333	8.064	8.0	valid	0.064	0.004
10	8/13/09	1344	1408	8.078	7.9	valid	0.178	0.032
11						invalid		
			Averages:	8.062	7.922		0.140	

Standard Deviation	0.0984
Number of Tests	9
t-value	2.306
Confidence Coefficient	0.0756

Absolute Difference = 0.1

Relative Accuracy - 40CFR60, Appendix B, Performance Specification 2
Sulfur Dioxide

Client:	Covanta Projects, Inc.	Project #:	10639
Facility:	Huntington RRF	Operator:	WHH
Test Location:	Unit 1 FF Outlet		
Analyzer:	Western Research 921		
Serial Number:	AX-921-9646-1		
App. Standard:	29		
Parameter Units:	ppm@7%O2		

Test Run #	Test Date	Test Start Time	Test Stop Time	Reference Method Result	Facility CEM Result	Test Status	Difference (Ref-Fac)	Difference Squared
1	8/13/09	823	847	0.000	0	void		
2	8/13/09	859	923	0.000	0	valid	0.000	0.000
3	8/13/09	936	1000	0.000	0	valid	0.000	0.000
4	8/13/09	1009	1034	0.000	0	valid	0.000	0.000
5	8/13/09	1045	1109	0.000	0	valid	0.000	0.000
6	8/13/09	1124	1148	0.000	0	valid	0.000	0.000
7	8/13/09	1159	1223	0.000	0	valid	0.000	0.000
8	8/13/09	1234	1258	0.000	0	valid	0.000	0.000
9	8/13/09	1309	1333	0.000	0	valid	0.000	0.000
10	8/13/09	1344	1408	0.000	0	valid	0.000	0.000
11						invalid		
			Averages:	0.000	0.000		0.000	

Standard Deviation	0.0000
Number of Tests	9
t-value	2.306
Confidence Coefficient	0.0000

Relative Accuracy Percent of Standard: 0.0

Relative Accuracy - 40CFR60, Appendix B, Performance Specification 2
Nitrogen Oxides

Client:	Covanta Projects, Inc.	Project #:	10639
Facility:	Huntington RRF	Operator:	WHH
Test Location:	Unit 1 FF Outlet		
Analyzer:	California Analytical 650		
Serial Number:	W04036-Nox		
App. Standard:	185		
Parameter Units:	ppm@7%O2		

Test Run #	Test Date	Test Start Time	Test Stop Time	Reference Method Result	Facility CEM Result	Test Status	Difference (Ref-Fac)	Difference Squared
1	8/13/09	823	847	104.987	106	valid	-1.013	1.026
2	8/13/09	859	923	102.318	103	valid	-0.682	0.465
3	8/13/09	936	1000	99.010	101	valid	-1.990	3.959
4	8/13/09	1009	1034	103.859	104	valid	-0.141	0.020
5	8/13/09	1045	1109	99.958	98	valid	1.958	3.834
6	8/13/09	1124	1148	102.142	104	valid	-1.858	3.451
7	8/13/09	1159	1223	105.258	103	valid	2.258	5.100
8	8/13/09	1234	1258	104.831	109	void		
9	8/13/09	1309	1333	101.440	103	valid	-1.560	2.435
10	8/13/09	1344	1408	109.162	110	valid	-0.838	0.703
11						invalid		
			Averages:	103.126	103.556		-0.429	

Standard Deviation	1.5545
Number of Tests	9
t-value	2.306
Confidence Coefficient	1.1949

Relative Accuracy % of Reference Method: 1.6

Relative Accuracy - 40CFR60, Appendix B, Performance Specification 2
Nitrogen Oxides

Client:	Covanta Projects, Inc.	Project #:	10639
Facility:	Huntington RRF	Operator:	WHH
Test Location:	Unit 1 FF Outlet		
Analyzer:	California Analytical 650		
Serial Number:	W04036-Nox		
App. Standard:	N/A		
Parameter Units:	lb/hr		

Test Run #	Test Date	Test Start Time	Test Stop Time	Reference Method Result	Facility CEM Result	Test Status	Difference (Ref-Fac)	Difference Squared
1	8/13/09	823	847	26.422	24.61	valid	1.812	3.284
2	8/13/09	859	923	27.269	24.94	void		
3	8/13/09	936	1000	24.946	24.19	valid	0.756	0.571
4	8/13/09	1009	1034	25.816	25.13	valid	0.686	0.471
5	8/13/09	1045	1109	24.841	23.62	valid	1.221	1.490
6	8/13/09	1124	1148	26.974	24.77	valid	2.204	4.857
7	8/13/09	1159	1223	26.570	24.69	valid	1.880	3.534
8	8/13/09	1234	1258	27.208	25.50	valid	1.708	2.916
9	8/13/09	1309	1333	26.224	24.70	valid	1.524	2.322
10	8/13/09	1344	1408	28.407	26.88	valid	1.527	2.332
11						invalid		
			Averages:	26.379	24.899		1.480	

Standard Deviation	0.5090
Number of Tests	9
t-value	2.306
Confidence Coefficient	0.3912

Relative Accuracy % of Reference Method: 7.1

Relative Accuracy - 40CFR60, Appendix B, Performance Specification 4
Carbon Monoxide Low

Client:	Covanta Projects, Inc.	Project #:	10639
Facility:	Huntington RRF	Operator:	WHH
Test Location:	Unit 1 FF Outlet		
Analyzer:	Thermo Environmental 48		
Serial Number:	0636119863L		
App. Standard:	100		
Parameter Units:	ppm@7%O2 Low Range		

Test Run #	Test Date	Test Start Time	Test Stop Time	Reference Method Result	Facility CEM Result	Test Status	Difference (Ref-Fac)	Difference Squared
1	8/13/09	823	847	49.463	51	void		
2	8/13/09	859	923	28.592	28	valid	0.592	0.350
3	8/13/09	936	1000	23.675	23	valid	0.675	0.455
4	8/13/09	1009	1034	24.261	23	valid	1.261	1.590
5	8/13/09	1045	1109	24.598	25	valid	-0.402	0.162
6	8/13/09	1124	1148	17.378	18	valid	-0.622	0.386
7	8/13/09	1159	1223	24.001	24	valid	0.001	0.000
8	8/13/09	1234	1258	20.297	21	valid	-0.703	0.494
9	8/13/09	1309	1333	22.212	23	valid	-0.788	0.621
10	8/13/09	1344	1408	23.395	23	valid	0.395	0.156
11						invalid		
			Averages:	23.156	23.111		0.045	

Standard Deviation	0.7242
Number of Tests	9
t-value	2.306
Confidence Coefficient	0.5567

Relative Accuracy % of Reference Method: 2.6

Relative Accuracy - 40CFR60, Appendix B, Performance Specification 4
Carbon Monoxide High Range

Client:	Covanta Projects, Inc.	Project #:	10639
Facility:	Huntington RRF	Operator:	WHH
Test Location:	Unit 1 FF Outlet		
Analyzer:	Thermo Environmental 48		
Serial Number:	0636119863H		
App. Standard:	100		
Parameter Units:	ppm@7%O2 High Range		

Test Run #	Test Date	Test Start Time	Test Stop Time	Reference Method Result	Facility CEM Result	Test Status	Difference (Ref-Fac)	Difference Squared
1	8/13/09	823	847	49.463	52	valid	-2.537	6.437
2	8/13/09	859	923	28.592	27	valid	1.592	2.533
3	8/13/09	936	1000	23.675	22	void		
4	8/13/09	1009	1034	24.261	23	valid	1.261	1.590
5	8/13/09	1045	1109	24.598	24	valid	0.598	0.357
6	8/13/09	1124	1148	17.378	18	valid	-0.622	0.386
7	8/13/09	1159	1223	24.001	23	valid	1.001	1.002
8	8/13/09	1234	1258	20.297	20	valid	0.297	0.088
9	8/13/09	1309	1333	22.212	23	valid	-0.788	0.621
10	8/13/09	1344	1408	23.395	23	valid	0.395	0.156
11						invalid		
			Averages:	26.022	25.889		0.133	

Standard Deviation	1.2753
Number of Tests	9
t-value	2.306
Confidence Coefficient	0.9803

Relative Accuracy % of Reference Method: 4.3

EMISSION RATE DATA SUMMARY

Client Name	Covanta Projects, Inc.	**Operator**	WHH
Plant Name	Huntington RRF	**Project #**	10639
Sampling Location	Unit 1 FF Outlet		

Run Number		1	2	3	4
Run Date		8/13/09	8/13/09	8/13/09	8/13/09
Run Start Time	hh:mm	823	859	936	1009
Run Stop Time	hh:mm	847	923	1000	1034
Carbon Dioxide Percentage	% CO_2	7.781	8.297	8.163	8.397
Oxygen Percentage	% O_2	11.897	11.366	11.887	12.008
Dry Standard Stack Flow Rate	DSCFM	54,232	54,232	54,232	54,232
Flow rates taken from runs:		1-O-M4-1	1-O-M4-1	1-O-M4-1	1-O-M4-1

Sulfur Dioxide					
Formula Weight	Fwt	64.06	64.06	64.06	64.06
Concentration, ppm (dry)	ppmvd	-0.840	-0.579	-0.785	-0.694
Concentration, ppm@7%O2	ppm@7%O2	-1.297	-0.844	-1.211	-1.085

Nitrogen Oxides as NO2					
Formula Weight	Fwt	46.01	46.01	46.01	46.01
Concentration, ppm (dry)	ppmvd	68.000	70.180	64.200	66.440
Concentration, ppm@7%O2	ppm@7%O2	104.987	102.318	99.010	103.859
Emission Rate, lb/hr	lb/hr	26.422	27.269	24.946	25.816

Carbon Monoxide					
Formula Weight	Fwt	28.01	28.01	28.01	28.01
Concentration, ppm (dry)	ppmvd	32.037	19.611	15.351	15.520
Concentration, ppm@7%O2	ppm@7%O2	49.463	28.592	23.675	24.261

EMISSION RATE DATA SUMMARY

Client Name	Covanta Projects, Inc.	**Operator**	WHH
Plant Name	Huntington RRF	**Project #**	10639
Sampling Location	Unit 1 FF Outlet		

Run Number		5	6	7	8
Run Date		8/13/09	8/13/09	8/13/09	8/13/09
Run Start Time	hh:mm	1045	1124	1159	1234
Run Stop Time	hh:mm	1109	1148	1223	1258
Carbon Dioxide Percentage	% CO_2	8.081	8.099	7.821	8.175
Oxygen Percentage	% O_2	12.010	11.453	11.870	11.515
Dry Standard Stack Flow Rate	DSCFM	54,232	54,232	54,232	53,651
Flow rates taken from runs:		1-O-M4-1	1-O-M4-1	1-O-M4-1	1-O-M4-2

Sulfur Dioxide					
Formula Weight	Fwt	64.06	64.06	64.06	64.06
Concentration, ppm (dry)	ppmvd	-0.199	-0.469	-0.475	-0.638
Concentration, ppm@7%O2	ppm@7%O2	-0.311	-0.690	-0.731	-0.945

Nitrogen Oxides as NO2					
Formula Weight	Fwt	46.01	46.01	46.01	46.01
Concentration, ppm (dry)	ppmvd	63.930	69.420	68.380	70.780
Concentration, ppm@7%O2	ppm@7%O2	99.958	102.142	105.258	104.831
Emission Rate, lb/hr	lb/hr	24.841	26.974	26.570	27.208

Carbon Monoxide					
Formula Weight	Fwt	28.01	28.01	28.01	28.01
Concentration, ppm (dry)	ppmvd	15.732	11.811	15.592	13.704
Concentration, ppm@7%O2	ppm@7%O2	24.598	17.378	24.001	20.297

EMISSION RATE DATA SUMMARY

Client Name	Covanta Projects, Inc.	**Operator**	WHH
Plant Name	Huntington RRF	**Project #**	10639
Sampling Location	Unit 1 FF Outlet		

Run Number		9	10		
Run Date		8/13/09	8/13/09		
Run Start Time	hh:mm	1309	1344		
Run Stop Time	hh:mm	1333	1408		
Carbon Dioxide Percentage	% CO_2	8.064	8.078		
Oxygen Percentage	% O_2	11.552	11.490		
Dry Standard Stack Flow Rate	DSCFM	53.651	53.651		
Flow rates taken from runs:		1-O-M4-2	1-O-M4-2		

Sulfur Dioxide					
Formula Weight	Fwt	64.06	64.06		
Concentration, ppm (dry)	ppmvd	-0.596	-0.610		
Concentration, ppm@7%O2	ppm@7%O2	-0.886	-0.901		

Nitrogen Oxides as NO2					
Formula Weight	Fwt	46.01	46.01		
Concentration, ppm (dry)	ppmvd	68.220	73.900		
Concentration, ppm@7%O2	ppm@7%O2	101.440	109.162		
Emission Rate, lb/hr	lb/hr	26.224	28.407		

Carbon Monoxide					
Formula Weight	Fwt	28.01	28.01		
Concentration, ppm (dry)	ppmvd	14.938	15.838		
Concentration, ppm@7%O2	ppm@7%O2	22.212	23.395		

Relative Accuracy - 40CFR60, Appendix B, Performance Specification 3
Oxygen

Client:	Covanta Projects, Inc.	Project #:	10639
Facility:	Huntington RRF	Operator:	WHH
Test Location:	Unit 2 SDA Inlet		
Analyzer:	Servomex 1420		
Serial Number:	3337		
App. Standard:	NA		
Parameter Units:	percent, %		

Test Run #	Test Date	Test Start Time	Test Stop Time	Reference Method Result	Facility CEM Result	Test Status	Difference (Ref-Fac)	Difference Squared
1	8/12/09	908	932	11.037	10.7	valid	0.337	0.114
2	8/12/09	945	1009	11.102	10.9	valid	0.202	0.041
3	8/12/09	1020	1044	11.229	11.0	valid	0.229	0.052
4	8/12/09	1059	1123	11.230	11.0	valid	0.230	0.053
5	8/12/09	1138	1202	11.411	10.9	valid	0.511	0.261
6	8/12/09	1212	1236	12.080	10.8	void		
7	8/12/09	1331	1355	11.012	10.4	valid	0.612	0.375
8	8/12/09	1410	1434	11.747	11.0	valid	0.747	0.558
9	8/12/09	1445	1509	11.520	11.1	valid	0.420	0.176
10	8/12/09	1520	1544	11.304	10.8	valid	0.504	0.254
			Averages:	11.288	10.867		0.421	

Standard Deviation	0.1891
Number of Tests	9
t-value	2.306
Confidence Coefficient	0.1454

Absolute Difference = 0.4

Relative Accuracy - 40CFR60, Appendix B, Performance Specification 3
Carbon Dioxide

Client:	Covanta Projects, Inc.	Project #:	10639
Facility:	Huntington RRF	Operator:	WHH
Test Location:	Unit 2 SDA Inlet		
Analyzer:	Siemens Ultramat 21P		
Serial Number:	A08-369		
App. Standard:	NA		
Parameter Units:	percent, %		

Test Run #	Test Date	Test Start Time	Test Stop Time	Reference Method Result	Facility CEM Result	Test Status	Difference (Ref-Fac)	Difference Squared
1	8/12/09	908	932	7.859	8.5	valid	-0.641	0.411
2	8/12/09	945	1009	7.576	8.4	valid	-0.824	0.679
3	8/12/09	1020	1044	7.636	8.5	valid	-0.864	0.746
4	8/12/09	1059	1123	7.656	8.4	valid	-0.744	0.554
5	8/12/09	1138	1202	7.495	8.4	valid	-0.905	0.819
6	8/12/09	1212	1236	7.036	8.5	void		
7	8/12/09	1331	1355	8.335	9.0	valid	-0.665	0.442
8	8/12/09	1410	1434	7.449	8.2	valid	-0.751	0.564
9	8/12/09	1445	1509	7.743	8.4	valid	-0.657	0.432
10	8/12/09	1520	1544	7.987	8.6	valid	-0.613	0.376
			Averages:	7.748	8.489		-0.740	

Standard Deviation	0.1050
Number of Tests	9
t-value	2.306
Confidence Coefficient	0.0807

Absolute Difference = 0.7

Relative Accuracy - 40CFR60, Appendix B, Performance Specification 2
Sulfur Dioxide

Client:	Covanta Projects, Inc.	Project #:	10639
Facility:	Huntington RRF	Operator:	WHH
Test Location:	Unit 2 SDA Inlet		
Analyzer:	Western Research 921		
Serial Number:	AX-921-9646-4		
App. Standard:	NA		
Parameter Units:	ppm@7%O2		

Test Run #	Test Date	Test Start Time	Test Stop Time	Reference Method Result	Facility CEM Result	Test Status	Difference (Ref-Fac)	Difference Squared
1	8/12/09	908	932	53.103	54	valid	-0.897	0.805
2	8/12/09	945	1009	58.974	64	valid	-5.026	25.265
3	8/12/09	1020	1044	40.460	45	valid	-4.540	20.615
4	8/12/09	1059	1123	30.416	31	valid	-0.584	0.341
5	8/12/09	1138	1202	40.913	42	valid	-1.087	1.181
6	8/12/09	1212	1236	52.401	54	valid	-1.599	2.557
7	8/12/09	1331	1355	57.158	71	void		
8	8/12/09	1410	1434	65.984	70	valid	-4.016	16.125
9	8/12/09	1445	1509	44.382	44	valid	0.382	0.146
10	8/12/09	1520	1544	59.389	59	valid	0.389	0.152
			Averages:	49.558	51.444		-1.886	

Standard Deviation	2.0964
Number of Tests	9
t-value	2.306
Confidence Coefficient	1.6114

Relative Accuracy % of Reference Method: 7.1

EMISSION RATE DATA SUMMARY

Client Name	Covanta Projects, Inc.	**Operator**	WHH
Plant Name	Huntington RRF	**Project #**	10639
Sampling Location	Unit 2 SDA Inlet		

Run Number		1	2	3	4
Run Date		8/12/09	8/12/09	8/12/09	8/12/09
Run Start Time	hh:mm	908	945	1020	1059
Run Stop Time	hh:mm	932	1009	1044	1123
Carbon Dioxide Percentage	% CO_2	7.859	7.576	7.636	7.656
Oxygen Percentage	% O_2	11.037	11.102	11.229	11.230

Sulfur Dioxide					
Formula Weight	Fwt	64.06	64.06	64.06	64.06
Concentration, ppm (dry)	ppmvd	37.680	41.570	28.150	21.160
Concentration, ppm@7%O2	ppm@7%O2	53.103	58.974	40.460	30.416

EMISSION RATE DATA SUMMARY

Client Name	Covanta Projects, Inc.	**Operator**	WHH
Plant Name	Huntington RRF	**Project #**	10639
Sampling Location	Unit 2 SDA Inlet		

Run Number		5	6	7	8
Run Date		8/12/09	8/12/09	8/12/09	8/12/09
Run Start Time	hh:mm	1138	1212	1331	1410
Run Stop Time	hh:mm	1202	1236	1355	1434
Carbon Dioxide Percentage	% CO_2	7.495	7.036	8.335	7.449
Oxygen Percentage	% O_2	11.411	12.080	11.012	11.747

Sulfur Dioxide					
Formula Weight	Fwt	64.06	64.06	64.06	64.06
Concentration, ppm (dry)	ppmvd	27.930	33.250	40.660	43.450
Concentration, ppm@7%O2	ppm@7%O2	40.913	52.401	57.158	65.984

EMISSION RATE DATA SUMMARY

Client Name	Covanta Projects, Inc.	**Operator**	WHH
Plant Name	Huntington RRF	**Project #**	10639
Sampling Location	Unit 2 SDA Inlet		

Run Number		9	10		
Run Date		8/12/09	8/12/09		
Run Start Time	hh:mm	1445	1520		
Run Stop Time	hh:mm	1509	1544		
Carbon Dioxide Percentage	% CO_2	7.743	7.987		
Oxygen Percentage	% O_2	11.520	11.304		

Sulfur Dioxide					
Formula Weight	Fwt	64.06	64.06		
Concentration, ppm (dry)	ppmvd	29.950	41.000		
Concentration, ppm@7%O2	ppm@7%O2	44.382	59.389		

Relative Accuracy - 40CFR60, Appendix B, Performance Specification 3
Oxygen

Client:	Covanta Projects, Inc.	Project #:	10639
Facility:	Huntington RRF	Operator:	WHH
Test Location:	Unit 2 FF Outlet		
Analyzer:	California Analytical 650		
Serial Number:	W04037-O2		
App. Standard:	NA		
Parameter Units:	percent, %		

Test Run #	Test Date	Test Start Time	Test Stop Time	Reference Method Result	Facility CEM Result	Test Status	Difference (Ref-Fac)	Difference Squared
1	8/12/09	908	932	12.075	12.5	valid	-0.425	0.181
2	8/12/09	945	1009	12.221	12.6	valid	-0.379	0.144
3	8/12/09	1020	1044	12.456	12.7	valid	-0.244	0.060
4	8/12/09	1059	1123	12.303	12.8	VOID		
5	8/12/09	1138	1202	12.397	12.8	valid	-0.403	0.162
6	8/12/09	1212	1236	12.453	12.6	valid	-0.147	0.022
7	8/12/09	1331	1355	11.997	12.3	valid	-0.303	0.092
8	8/12/09	1410	1434	12.438	12.8	valid	-0.362	0.131
9	8/12/09	1445	1509	12.506	12.9	valid	-0.394	0.155
10	8/12/09	1520	1544	12.267	12.6	valid	-0.333	0.111
			Averages:	12.312	12.644		-0.332	

Standard Deviation	0.0891
Number of Tests	9
t-value	2.306
Confidence Coefficient	0.0685

Absolute Difference = 0.3

Relative Accuracy - 40CFR60, Appendix B, Performance Specification 3
Carbon Dioxide

Client:	Covanta Projects, Inc.	Project #:	10639
Facility:	Huntington RRF	Operator:	WHH
Test Location:	Unit 2 FF Outlet		
Analyzer:	Siemens Ultramat 21P		
Serial Number:	A08-363		
App. Standard:	NA		
Parameter Units:	percent, %		

Test Run #	Test Date	Test Start Time	Test Stop Time	Reference Method Result	Facility CEM Result	Test Status	Difference (Ref-Fac)	Difference Squared
1	8/12/09	908	932	7.517	7.5	valid	0.017	0.000
2	8/12/09	945	1009	7.394	7.4	valid	-0.006	0.000
3	8/12/09	1020	1044	7.337	7.3	valid	0.037	0.001
4	8/12/09	1059	1123	7.506	7.3	valid	0.206	0.042
5	8/12/09	1138	1202	7.417	7.2	void		
6	8/12/09	1212	1236	7.566	7.4	valid	0.166	0.028
7	8/12/09	1331	1355	7.917	7.9	valid	0.017	0.000
8	8/12/09	1410	1434	7.199	7.2	valid	-0.001	0.000
9	8/12/09	1445	1509	7.269	7.2	valid	0.069	0.005
10	8/12/09	1520	1544	7.525	7.5	valid	0.025	0.001
			Averages:	7.470	7.411		0.059	

Standard Deviation	0.0760
Number of Tests	9
t-value	2.306
Confidence Coefficient	0.0584

Absolute Difference = 0.1

Relative Accuracy - 40CFR60, Appendix B, Performance Specification 2
Sulfur Dioxide

Client:	Covanta Projects, Inc.	Project #:	10639
Facility:	Huntington RRF	Operator:	WHH
Test Location:	Unit 2 FF Outlet		
Analyzer:	Western Research 921		
Serial Number:	AX-921-9646-3		
App. Standard:	29		
Parameter Units:	ppm@7%O2		

Test Run #	Test Date	Test Start Time	Test Stop Time	Reference Method Result	Facility CEM Result	Test Status	Difference (Ref-Fac)	Difference Squared
1	8/12/09	908	932	0.000	0	valid	0.000	0.000
2	8/12/09	945	1009	0.000	0	valid	0.000	0.000
3	8/12/09	1020	1044	0.000	0	valid	0.000	0.000
4	8/12/09	1059	1123	0.000	0	valid	0.000	0.000
5	8/12/09	1138	1202	0.000	0	valid	0.000	0.000
6	8/12/09	1212	1236	0.000	0	valid	0.000	0.000
7	8/12/09	1331	1355	0.000	0	valid	0.000	0.000
8	8/12/09	1410	1434	0.000	0	valid	0.000	0.000
9	8/12/09	1445	1509	0.000	0	valid	0.000	0.000
10	8/12/09	1520	1544	0.000	0	void		
			Averages:	0.000	0.000		0.000	

Standard Deviation	0.0000
Number of Tests	9
t-value	2.306
Confidence Coefficient	0.0000

Relative Accuracy Percent of Standard: 0.0

Relative Accuracy - 40CFR60, Appendix B, Performance Specification 2
Nitrogen Oxides

Client:	Covanta Projects, Inc.	Project #:	10639
Facility:	Huntington RRF	Operator:	WHH
Test Location:	Unit 2 FF Outlet		
Analyzer:	California Analytical 650		
Serial Number:	W04037-Nox		
App. Standard:	185		
Parameter Units:	ppm@7%O2		

Test Run #	Test Date	Test Start Time	Test Stop Time	Reference Method Result	Facility CEM Result	Test Status	Difference (Ref-Fac)	Difference Squared
1	8/12/09	908	932	86.330	91	valid	-4.670	21.812
2	8/12/09	945	1009	95.742	103	valid	-7.258	52.683
3	8/12/09	1020	1044	94.620	102	valid	-7.380	54.463
4	8/12/09	1059	1123	82.524	94	void		
5	8/12/09	1138	1202	94.928	102	valid	-7.072	50.013
6	8/12/09	1212	1236	91.657	95	valid	-3.343	11.173
7	8/12/09	1331	1355	100.624	106	valid	-5.376	28.902
8	8/12/09	1410	1434	84.547	93	valid	-8.453	71.461
9	8/12/09	1445	1509	99.473	108	valid	-8.527	72.717
10	8/12/09	1520	1544	88.717	93	valid	-4.283	18.348
			Averages:	92.960	99.222		-6.263	

Standard Deviation	1.8904
Number of Tests	9
t-value	2.306
Confidence Coefficient	1.4531

Relative Accuracy % of Reference Method: 8.3

Relative Accuracy - 40CFR60, Appendix B, Performance Specification 2
Nitrogen Oxides

Client:	Covanta Projects, Inc.	Project #:	10639
Facility:	Huntington RRF	Operator:	WHH
Test Location:	Unit 2 FF Outlet		
Analyzer:	California Analytical 650		
Serial Number:	W04037-Nox		
App. Standard:	N/A		
Parameter Units:	lb/hr		

Test Run #	Test Date	Test Start Time	Test Stop Time	Reference Method Result	Facility CEM Result	Test Status	Difference (Ref-Fac)	Difference Squared
1	8/12/09	908	932	21.638	22.73	valid	-1.092	1.193
2	8/12/09	945	1009	24.545	25.04	valid	-0.495	0.245
3	8/12/09	1020	1044	23.601	24.59	valid	-0.989	0.978
4	8/12/09	1059	1123	21.104	22.45	void		
5	8/12/09	1138	1202	24.010	24.91	valid	-0.900	0.809
6	8/12/09	1212	1236	23.030	23.09	valid	-0.060	0.004
7	8/12/09	1331	1355	24.950	25.16	valid	-0.210	0.044
8	8/12/09	1410	1434	21.446	22.78	valid	-1.334	1.779
9	8/12/09	1445	1509	25.030	25.38	valid	-0.350	0.123
10	8/12/09	1520	1544	22.959	22.49	valid	0.469	0.220
			Averages:	23.468	24.019		-0.551	

Standard Deviation	0.5767
Number of Tests	9
t-value	2.306
Confidence Coefficient	0.4433

Relative Accuracy % of Reference Method: 4.2

Relative Accuracy - 40CFR60, Appendix B, Performance Specification 4
Carbon Monoxide Low

Client:	Covanta Projects, Inc.	Project #:	10639
Facility:	Huntington RRF	Operator:	WHH
Test Location:	Unit 2 FF Outlet		
Analyzer:	Thermo Environmental 48		
Serial Number:	0636119864L		
App. Standard:	100		
Parameter Units:	ppm@7%O2 Low Range		

Test Run #	Test Date	Test Start Time	Test Stop Time	Reference Method Result	Facility CEM Result	Test Status	Difference (Ref-Fac)	Difference Squared
1	8/12/09	908	932	29.648	30	valid	-0.352	0.124
2	8/12/09	945	1009	40.050	42	valid	-1.950	3.801
3	8/12/09	1020	1044	47.088	49	valid	-1.912	3.656
4	8/12/09	1059	1123	36.754	40	void		
5	8/12/09	1138	1202	26.724	29	valid	-2.276	5.179
6	8/12/09	1212	1236	28.613	30	valid	-1.387	1.924
7	8/12/09	1331	1355	36.393	38	valid	-1.607	2.582
8	8/12/09	1410	1434	29.030	30	valid	-0.970	0.940
9	8/12/09	1445	1509	32.983	35	valid	-2.017	4.068
10	8/12/09	1520	1544	28.270	31	valid	-2.730	7.452
			Averages:	33.200	34.889		-1.689	

Standard Deviation	0.7119
Number of Tests	9
t-value	2.306
Confidence Coefficient	0.5472

Relative Accuracy % of Reference Method: 6.7

Relative Accuracy - 40CFR60, Appendix B, Performance Specification 4
Carbon Monoxide High Range

Client:	Covanta Projects, Inc.	Project #:	10639
Facility:	Huntington RRF	Operator:	WHH
Test Location:	Unit 2 FF Outlet		
Analyzer:	Thermo Environmental 48		
Serial Number:	0636119864H		
App. Standard:	100		
Parameter Units:	ppm@7%O2 High Range		

Test Run #	Test Date	Test Start Time	Test Stop Time	Reference Method Result	Facility CEM Result	Test Status	Difference (Ref-Fac)	Difference Squared
1	8/12/09	908	932	29.648	29	valid	0.648	0.419
2	8/12/09	945	1009	40.050	42	valid	-1.950	3.801
3	8/12/09	1020	1044	47.088	49	valid	-1.912	3.656
4	8/12/09	1059	1123	36.754	39	VOID		
5	8/12/09	1138	1202	26.724	28	valid	-1.276	1.627
6	8/12/09	1212	1236	28.613	29	valid	-0.387	0.150
7	8/12/09	1331	1355	36.393	37	valid	-0.607	0.368
8	8/12/09	1410	1434	29.030	29	valid	0.030	0.001
9	8/12/09	1445	1509	32.983	34	valid	-1.017	1.034
10	8/12/09	1520	1544	28.270	30	valid	-1.730	2.992
			Averages:	33.200	34.111		-0.911	

Standard Deviation	0.9068
Number of Tests	9
t-value	2.306
Confidence Coefficient	0.6970

Relative Accuracy % of Reference Method: 4.8

EMISSION RATE DATA SUMMARY

Client Name	Covanta Projects, Inc.	**Operator**	WHH
Plant Name	Huntington RRF	**Project #**	10639
Sampling Location	Unit 2 FF Outlet		

Run Number		1	2	3	4
Run Date		8/12/09	8/12/09	8/12/09	8/12/09
Run Start Time	hh:mm	908	945	1020	1059
Run Stop Time	hh:mm	932	1009	1044	1123
Carbon Dioxide Percentage	% CO_2	7.517	7.394	7.337	7.506
Oxygen Percentage	% O_2	12.075	12.221	12.456	12.303
Dry Standard Stack Flow Rate	DSCFM	55,099	57,307	57,307	57,709
Flow rates taken from runs:		2-O-M316-1	2-O-M8-1	2-O-M8-1	2-O-M316-2

Sulfur Dioxide					
Formula Weight	Fwt	64.06	64.06	64.06	64.06
Concentration, ppm (dry)	ppmvd	-0.976	-0.544	-0.881	-1.193
Concentration, ppm@7%O2	ppm@7%O2	-1.537	-0.871	-1.450	-1.929

Nitrogen Oxides as NO2					
Formula Weight	Fwt	46.01	46.01	46.01	46.01
Concentration, ppm (dry)	ppmvd	54.810	59.780	57.480	51.040
Concentration, ppm@7%O2	ppm@7%O2	86.330	95.742	94.620	82.524
Emission Rate, lb/hr	lb/hr	21.638	24.545	23.601	21.104

Carbon Monoxide					
Formula Weight	Fwt	28.01	28.01	28.01	28.01
Concentration, ppm (dry)	ppmvd	18.823	25.007	28.605	22.732
Concentration, ppm@7%O2	ppm@7%O2	29.648	40.050	47.088	36.754

EMISSION RATE DATA SUMMARY

Client Name	Covanta Projects, Inc.	**Operator**	WHH
Plant Name	Huntington RRF	**Project #**	10639
Sampling Location	Unit 2 FF Outlet		

Run Number		5	6	7	8
Run Date		8/12/09	8/12/09	8/12/09	8/12/09
Run Start Time	hh:mm	1138	1212	1331	1410
Run Stop Time	hh:mm	1202	1236	1355	1434
Carbon Dioxide Percentage	% CO_2	7.417	7.566	7.917	7.199
Oxygen Percentage	% O_2	12.397	12.453	11.997	12.438
Dry Standard Stack Flow Rate	DSCFM	57,709	57,709	54,032	58,156
Flow rates taken from runs:		2-O-M316-2	2-O-M316-2	2-O-M8-2	2-O-M8-3

Sulfur Dioxide					
Formula Weight	Fwt	64.06	64.06	64.06	64.06
Concentration, ppm (dry)	ppmvd	-1.244	-1.138	-1.434	-0.884
Concentration, ppm@7%O2	ppm@7%O2	-2.034	-1.873	-2.239	-1.452

Nitrogen Oxides as NO2					
Formula Weight	Fwt	46.01	46.01	46.01	46.01
Concentration, ppm (dry)	ppmvd	58.070	55.700	64.450	51.470
Concentration, ppm@7%O2	ppm@7%O2	94.928	91.657	100.624	84.547
Emission Rate, lb/hr	lb/hr	24.010	23.030	24.950	21.446

Carbon Monoxide					
Formula Weight	Fwt	28.01	28.01	28.01	28.01
Concentration, ppm (dry)	ppmvd	16.348	17.388	23.310	17.673
Concentration, ppm@7%O2	ppm@7%O2	26.724	28.613	36.393	29.030

EMISSION RATE DATA SUMMARY

Client Name	Covanta Projects, Inc.	**Operator**	WHH
Plant Name	Huntington RRF	**Project #**	10639
Sampling Location	Unit 2 FF Outlet		

Run Number		9	10		
Run Date		8/12/09	8/12/09		
Run Start Time	hh:mm	1445	1520		
Run Stop Time	hh:mm	1509	1544		
Carbon Dioxide Percentage	% CO_2	7.269	7.525		
Oxygen Percentage	% O_2	12.506	12.267		
Dry Standard Stack Flow Rate	DSCFM	58,156	58,156		

Flow rates taken from runs: 2-O-M8-3 2-O-M8-3

Sulfur Dioxide					
Formula Weight	Fwt	64.06	64.06		
Concentration, ppm (dry)	ppmvd	-1.093	-0.806		
Concentration, ppm@7%O2	ppm@7%O2	-1.810	-1.298		

Nitrogen Oxides as NO2					
Formula Weight	Fwt	46.01	46.01		
Concentration, ppm (dry)	ppmvd	60.070	55.100		
Concentration, ppm@7%O2	ppm@7%O2	99.473	88.717		
Emission Rate, lb/hr	lb/hr	25.030	22.959		

Carbon Monoxide					
Formula Weight	Fwt	28.01	28.01		
Concentration, ppm (dry)	ppmvd	19.918	17.558		
Concentration, ppm@7%O2	ppm@7%O2	32.983	28.270		

Relative Accuracy - 40CFR60, Appendix B, Performance Specification 3
Oxygen

Client:	Covanta Projects, Inc.	Project #:	10639
Facility:	Huntington RRF	Operator:	WHH
Test Location:	Unit 3 SDA Inlet		
Analyzer:	Servomex 1420		
Serial Number:	3343		
App. Standard:	NA		
Parameter Units:	percent, %		

Test Run #	Test Date	Test Start Time	Test Stop Time	Reference Method Result	Facility CEM Result	Test Status	Difference (Ref-Fac)	Difference Squared
1	8/11/09	854	918	11.962	11.4	valid	0.562	0.316
2	8/11/09	1011	1035	12.650	11.2	void		
3	8/11/09	1122	1146	11.834	11.1	valid	0.734	0.539
4	8/11/09	1159	1223	11.750	11.2	valid	0.550	0.303
5	8/11/09	1237	1301	11.990	11.4	valid	0.590	0.348
6	8/11/09	1316	1340	11.786	11.2	valid	0.586	0.343
7	8/11/09	1351	1415	11.276	10.6	valid	0.676	0.457
8	8/11/09	1427	1451	11.645	11.0	valid	0.645	0.416
9	8/11/09	1501	1525	11.550	10.9	valid	0.650	0.423
10	8/11/09	1546	1610	11.714	11.0	valid	0.714	0.510
			Averages:	11.723	11.089		0.634	

Standard Deviation	0.0662
Number of Tests	9
t-value	2.306
Confidence Coefficient	0.0509

Absolute Difference = 0.6

Relative Accuracy - 40CFR60, Appendix B, Performance Specification 3
Carbon Dioxide

Client:	Covanta Projects, Inc.	Project #:	10639
Facility:	Huntington RRF	Operator:	WHH
Test Location:	Unit 3 SDA Inlet		
Analyzer:	Siemens Ultramat 21P		
Serial Number:	A08-367		
App. Standard:	NA		
Parameter Units:	percent, %		

Test Run #	Test Date	Test Start Time	Test Stop Time	Reference Method Result	Facility CEM Result	Test Status	Difference (Ref-Fac)	Difference Squared
1	8/11/09	854	918	8.293	8.3	valid	-0.007	0.000
2	8/11/09	1011	1035	8.044	8.3	valid	-0.256	0.066
3	8/11/09	1122	1146	8.355	8.2	valid	0.155	0.024
4	8/11/09	1159	1223	8.416	8.3	valid	0.116	0.013
5	8/11/09	1237	1301	8.268	8.1	valid	0.168	0.028
6	8/11/09	1316	1340	8.381	8.4	valid	-0.019	0.000
7	8/11/09	1351	1415	8.573	9.0	VOID		
8	8/11/09	1427	1451	8.413	8.5	valid	-0.087	0.008
9	8/11/09	1501	1525	8.428	8.6	valid	-0.172	0.030
10	8/11/09	1546	1610	8.364	8.4	valid	-0.036	0.001
			Averages:	8.329	8.344		-0.015	

Standard Deviation	0.1449
Number of Tests	9
t-value	2.306
Confidence Coefficient	0.1114

Absolute Difference = 0.0

Relative Accuracy - 40CFR60, Appendix B, Performance Specification 2
Sulfur Dioxide

Client:	Covanta Projects, Inc.	Project #:	10639
Facility:	Huntington RRF	Operator:	WHH
Test Location:	Unit 3 SDA Inlet		
Analyzer:	Western Research 921		
Serial Number:	AX-921-9646-6		
App. Standard:	NA		
Parameter Units:	ppm@7%O2		

Test Run #	Test Date	Test Start Time	Test Stop Time	Reference Method Result	Facility CEM Result	Test Status	Difference (Ref-Fac)	Difference Squared
1	8/11/09	854	918	140.835	148	valid	-7.165	51.336
2	8/11/09	1011	1035	160.718	165	valid	-4.282	18.338
3	8/11/09	1122	1146	64.042	67	valid	-2.958	8.751
4	8/11/09	1159	1223	55.235	60	valid	-4.765	22.701
5	8/11/09	1237	1301	53.681	59	VOID		
6	8/11/09	1316	1340	64.116	68	valid	-3.884	15.083
7	8/11/09	1351	1415	42.304	46	valid	-3.696	13.662
8	8/11/09	1427	1451	38.043	40	valid	-1.957	3.830
9	8/11/09	1501	1525	39.678	43	valid	-3.322	11.034
10	8/11/09	1546	1610	44.381	48	valid	-3.619	13.095
			Averages:	72.150	76.111		-3.961	

Standard Deviation	1.4421
Number of Tests	9
t-value	2.306
Confidence Coefficient	1.1085

Relative Accuracy % of Reference Method: 7.0

EMISSION RATE DATA SUMMARY

Client Name	Covanta Projects, Inc.	**Operator**	WHH
Plant Name	Huntington RRF	**Project #**	10639
Sampling Location	Unit 3 SDA Inlet		

Run Number		1	2	3	4
Run Date		8/11/09	8/11/09	8/11/09	8/11/09
Run Start Time	hh:mm	854	1011	1122	1159
Run Stop Time	hh:mm	918	1035	1146	1223
Carbon Dioxide Percentage	% CO_2	8.293	8.044	8.355	8.416
Oxygen Percentage	% O_2	11.962	12.650	11.834	11.750

Sulfur Dioxide					
Formula Weight	Fwt	64.06	64.06	64.06	64.06
Concentration, ppm (dry)	ppmvd	90.560	95.390	41.770	36.360
Concentration, ppm@7%O2	ppm@7%O2	140.835	160.718	64.042	55.235

EMISSION RATE DATA SUMMARY

Client Name	Covanta Projects, Inc.	**Operator**	WHH
Plant Name	Huntington RRF	**Project #**	10639
Sampling Location	Unit 3 SDA Inlet		

Run Number		5	6	7	8
Run Date		8/11/09	8/11/09	8/11/09	8/11/09
Run Start Time	hh:mm	1237	1316	1351	1427
Run Stop Time	hh:mm	1301	1340	1415	1451
Carbon Dioxide Percentage	% CO_2	8.268	8.381	8.573	8.413
Oxygen Percentage	% O_2	11.990	11.786	11.276	11.645

Sulfur Dioxide					
Formula Weight	Fwt	64.06	64.06	64.06	64.06
Concentration, ppm (dry)	ppmvd	34.410	42.040	29.290	25.330
Concentration, ppm@7%O2	ppm@7%O2	53.681	64.116	42.304	38.043

EMISSION RATE DATA SUMMARY

Client Name	Covanta Projects, Inc.	**Operator**	WHH
Plant Name	Huntington RRF	**Project #**	10639
Sampling Location	Unit 3 SDA Inlet		

Run Number		9	10		
Run Date		8/11/09	8/11/09		
Run Start Time	hh:mm	1501	1546		
Run Stop Time	hh:mm	1525	1610		
Carbon Dioxide Percentage	% CO_2	8.428	8.364		
Oxygen Percentage	% O_2	11.550	11.714		

Sulfur Dioxide					
Formula Weight	Fwt	64.06	64.06		
Concentration, ppm (dry)	ppmvd	26.690	29.330		
Concentration, ppm@7%O2	ppm@7%O2	39.678	44.381		

Relative Accuracy - 40CFR60, Appendix B, Performance Specification 3
Oxygen

Client:	Covanta Projects, Inc.	Project #:	10639
Facility:	Huntington RRF	Operator:	WHH
Test Location:	Unit 3 FF Outlet		
Analyzer:	California Analytical 650		
Serial Number:	W04038-O2		
App. Standard:	NA		
Parameter Units:	percent, %		

Test Run #	Test Date	Test Start Time	Test Stop Time	Reference Method Result	Facility CEM Result	Test Status	Difference (Ref-Fac)	Difference Squared
1	8/11/09	854	918	11.978	12.6	VOID		
2	8/11/09	1011	1035	11.953	12.4	valid	-0.447	0.200
3	8/11/09	1122	1146	11.936	12.3	valid	-0.364	0.132
4	8/11/09	1159	1223	11.966	12.3	valid	-0.334	0.112
5	8/11/09	1237	1301	12.179	12.6	valid	-0.421	0.177
6	8/11/09	1316	1340	11.950	12.4	valid	-0.450	0.203
7	8/11/09	1351	1415	11.389	11.8	valid	-0.411	0.169
8	8/11/09	1427	1451	11.762	12.1	valid	-0.338	0.114
9	8/11/09	1501	1525	11.678	12.0	valid	-0.322	0.104
10	8/11/09	1546	1610	11.733	12.2	valid	-0.467	0.218
			Averages:	11.838	12.233		-0.395	

Standard Deviation	0.0560
Number of Tests	9
t-value	2.306
Confidence Coefficient	0.0431

Absolute Difference = 0.4

Relative Accuracy - 40CFR60, Appendix B, Performance Specification 3
Carbon Dioxide

Client:	Covanta Projects, Inc.	Project #:	10639
Facility:	Huntington RRF	Operator:	WHH
Test Location:	Unit 3 FF Outlet		
Analyzer:	Siemens Ultramat 21P		
Serial Number:	A08-368		
App. Standard:	NA		
Parameter Units:	percent, %		

Test Run #	Test Date	Test Start Time	Test Stop Time	Reference Method Result	Facility CEM Result	Test Status	Difference (Ref-Fac)	Difference Squared
1	8/11/09	854	918	7.771	7.5	valid	0.271	0.073
2	8/11/09	1011	1035	7.756	7.5	valid	0.256	0.066
3	8/11/09	1122	1146	7.722	7.5	valid	0.222	0.049
4	8/11/09	1159	1223	7.767	7.5	valid	0.267	0.071
5	8/11/09	1237	1301	7.568	7.4	valid	0.168	0.028
6	8/11/09	1316	1340	7.835	7.6	valid	0.235	0.055
7	8/11/09	1351	1415	8.317	8.2	valid	0.117	0.014
8	8/11/09	1427	1451	7.894	7.7	valid	0.194	0.038
9	8/11/09	1501	1525	7.992	7.8	valid	0.192	0.037
10	8/11/09	1546	1610	7.897	7.6	VOID		
			Averages:	7.847	7.633		0.214	

Standard Deviation	0.0509
Number of Tests	9
t-value	2.306
Confidence Coefficient	0.0391

Absolute Difference = 0.2

Relative Accuracy - 40CFR60, Appendix B, Performance Specification 2
Sulfur Dioxide

Client:	Covanta Projects, Inc.	Project #:	10639
Facility:	Huntington RRF	Operator:	WHH
Test Location:	Unit 3 FF Outlet		
Analyzer:	Western Research 921		
Serial Number:	AX-921-9646-5		
App. Standard:	29		
Parameter Units:	ppm@7%O2		

Test Run #	Test Date	Test Start Time	Test Stop Time	Reference Method Result	Facility CEM Result	Test Status	Difference (Ref-Fac)	Difference Squared
1	8/11/09	854	918	5.434	0	VOID		
2	8/11/09	1011	1035	3.194	1	valid	2.194	4.814
3	8/11/09	1122	1146	0.000	0	valid	0.000	0.000
4	8/11/09	1159	1223	0.000	0	valid	0.000	0.000
5	8/11/09	1237	1301	0.000	0	valid	0.000	0.000
6	8/11/09	1316	1340	0.000	0	valid	0.000	0.000
7	8/11/09	1351	1415	0.000	0	valid	0.000	0.000
8	8/11/09	1427	1451	0.000	0	valid	0.000	0.000
9	8/11/09	1501	1525	0.000	0	valid	0.000	0.000
10	8/11/09	1546	1610	0.000	0	valid	0.000	0.000
			Averages:	0.355	0.111		0.244	

Standard Deviation	0.7314
Number of Tests	9
t-value	2.306
Confidence Coefficient	0.5622

Relative Accuracy Percent of Standard: 2.8

Relative Accuracy - 40CFR60, Appendix B, Performance Specification 2
Nitrogen Oxides

Client:	Covanta Projects, Inc.	Project #:	10639
Facility:	Huntington RRF	Operator:	WHH
Test Location:	Unit 3 FF Outlet		
Analyzer:	California Analytical 650		
Serial Number:	W04038-Nox		
App. Standard:	185		
Parameter Units:	ppm@7%O2		

Test Run #	Test Date	Test Start Time	Test Stop Time	Reference Method Result	Facility CEM Result	Test Status	Difference (Ref-Fac)	Difference Squared
1	8/11/09	854	918	92.978	107	VOID		
2	8/11/09	1011	1035	94.179	102	valid	-7.821	61.171
3	8/11/09	1122	1146	98.171	101	valid	-2.829	8.001
4	8/11/09	1159	1223	103.091	112	valid	-8.909	79.372
5	8/11/09	1237	1301	97.958	106	valid	-8.042	64.670
6	8/11/09	1316	1340	97.502	103	valid	-5.498	30.229
7	8/11/09	1351	1415	100.827	108	valid	-7.173	51.459
8	8/11/09	1427	1451	86.369	93	valid	-6.631	43.967
9	8/11/09	1501	1525	92.410	98	valid	-5.590	31.243
10	8/11/09	1546	1610	102.502	110	valid	-7.498	56.213
			Averages:	97.001	103.667		-6.666	

Standard Deviation	1.8186
Number of Tests	9
t-value	2.306
Confidence Coefficient	1.3979

Relative Accuracy % of Reference Method: 8.3

Relative Accuracy - 40CFR60, Appendix B, Performance Specification 2
Nitrogen Oxides

Client:	Covanta Projects, Inc.	Project #:	10639
Facility:	Huntington RRF	Operator:	WHH
Test Location:	Unit 3 FF Outlet		
Analyzer:	California Analytical 650		
Serial Number:	W04038-Nox		
App. Standard:	N/A		
Parameter Units:	lb/hr Nox		

Test Run #	Test Date	Test Start Time	Test Stop Time	Reference Method Result	Facility CEM Result	Test Status	Difference (Ref-Fac)	Difference Squared
1	8/11/09	854	918	24.185	24.67	valid	-0.485	0.235
2	8/11/09	1011	1035	24.566	24.24	valid	0.326	0.106
3	8/11/09	1122	1146	25.656	25.27	valid	0.386	0.149
4	8/11/09	1159	1223	26.852	26.90	valid	-0.048	0.002
5	8/11/09	1237	1301	24.907	25.31	valid	-0.403	0.163
6	8/11/09	1316	1340	24.082	24.87	valid	-0.788	0.621
7	8/11/09	1351	1415	26.464	25.62	valid	0.844	0.713
8	8/11/09	1427	1451	21.781	22.19	valid	-0.409	0.168
9	8/11/09	1501	1525	23.518	23.87	valid	-0.352	0.124
10	8/11/09	1546	1610	25.931	26.89	void		
			Averages:	24.668	24.771		-0.103	

Standard Deviation	0.5226
Number of Tests	9
t-value	2.306
Confidence Coefficient	0.4017

Relative Accuracy % of Reference Method: 2.0

Relative Accuracy - 40CFR60, Appendix B, Performance Specification 4
Carbon Monoxide Low

Client:	Covanta Projects, Inc.	Project #:	10639
Facility:	Huntington RRF	Operator:	WHH
Test Location:	Unit 3 FF Outlet		
Analyzer:	Thermo Environmental 48		
Serial Number:	0636119865L		
App. Standard:	100		
Parameter Units:	ppm@7%O2 Low Range		

Test Run #	Test Date	Test Start Time	Test Stop Time	Reference Method Result	Facility CEM Result	Test Status	Difference (Ref-Fac)	Difference Squared
1	8/11/09	854	918	25.742	27	valid	-1.258	1.583
2	8/11/09	1011	1035	23.260	26	VOID		
3	8/11/09	1122	1146	12.101	13	valid	-0.899	0.808
4	8/11/09	1159	1223	24.276	25	valid	-0.724	0.524
5	8/11/09	1237	1301	26.525	27	valid	-0.475	0.226
6	8/11/09	1316	1340	22.956	24	valid	-1.044	1.090
7	8/11/09	1351	1415	20.846	21	valid	-0.154	0.024
8	8/11/09	1427	1451	22.219	21	valid	1.219	1.486
9	8/11/09	1501	1525	16.401	17	valid	-0.599	0.359
10	8/11/09	1546	1610	18.908	19	valid	-0.092	0.008
			Averages:	21.108	21.556		-0.447	

Standard Deviation	0.7337
Number of Tests	9
t-value	2.306
Confidence Coefficient	0.5640

Relative Accuracy % of Reference Method: 4.8

Relative Accuracy - 40CFR60, Appendix B, Performance Specification 4
Carbon Monoxide High Range

Client:	Covanta Projects, Inc.	Project #:	10639
Facility:	Huntington RRF	Operator:	WHH
Test Location:	Unit 3 FF Outlet		
Analyzer:	Thermo Environmental 48		
Serial Number:	0636119865H		
App. Standard:	100		
Parameter Units:	ppm@7%O2 High Range		

Test Run #	Test Date	Test Start Time	Test Stop Time	Reference Method Result	Facility CEM Result	Test Status	Difference (Ref-Fac)	Difference Squared
1	8/11/09	854	918	25.742	26	valid	-0.258	0.067
2	8/11/09	1011	1035	23.260	25	valid	-1.740	3.026
3	8/11/09	1122	1146	12.101	12	valid	0.101	0.010
4	8/11/09	1159	1223	24.276	24	valid	0.276	0.076
5	8/11/09	1237	1301	26.525	26	valid	0.525	0.276
6	8/11/09	1316	1340	22.956	23	valid	-0.044	0.002
7	8/11/09	1351	1415	20.846	20	valid	0.846	0.716
8	8/11/09	1427	1451	22.219	21	VOID		
9	8/11/09	1501	1525	16.401	16	valid	0.401	0.160
10	8/11/09	1546	1610	18.908	18	valid	0.908	0.825
			Averages:	21.224	21.111		0.113	

Standard Deviation	0.7940
Number of Tests	9
t-value	2.306
Confidence Coefficient	0.6103

Relative Accuracy % of Reference Method: 3.4

EMISSION RATE DATA SUMMARY

Client Name	Covanta Projects, Inc.	**Operator**	WHH
Plant Name	Huntington RRF	**Project #**	10639
Sampling Location	Unit 3 FF Outlet		

Run Number		1	2	3	4
Run Date		8/11/09	8/11/09	8/11/09	8/11/09
Run Start Time	hh:mm	854	1011	1122	1159
Run Stop Time	hh:mm	918	1035	1146	1223
Carbon Dioxide Percentage	% CO_2	7.771	7.756	7.722	7.767
Oxygen Percentage	% O_2	11.978	11.953	11.936	11.966
Dry Standard Stack Flow Rate	DSCFM	56,561	56,561	56,561	56,561
Flow Rates taken from runs:		3-O-M4-1	3-O-M4-1	3-O-M4-1	3-O-M4-1

Sulfur Dioxide					
Formula Weight	Fwt	64.06	64.06	64.06	64.06
Concentration, ppm (dry)	ppmvd	3.488	2.056	-2.452	-0.583
Concentration, ppm@7%O2	ppm@7%O2	5.434	3.194	-3.802	-0.907

Nitrogen Oxides as NO2					
Formula Weight	Fwt	46.01	46.01	46.01	46.01
Concentration, ppm (dry)	ppmvd	59.680	60.620	63.310	66.260
Concentration, ppm@7%O2	ppm@7%O2	92.978	94.179	98.171	103.091
Emission Rate, lb/hr	lb/hr	24.185	24.566	25.656	26.852

Carbon Monoxide					
Formula Weight	Fwt	28.01	28.01	28.01	28.01
Concentration, ppm (dry)	ppmvd	16.523	14.972	7.804	15.603
Concentration, ppm@7%O2	ppm@7%O2	25.742	23.260	12.101	24.276

EMISSION RATE DATA SUMMARY

Client Name	Covanta Projects, Inc.	**Operator**	WHH
Plant Name	Huntington RRF	**Project #**	10639
Sampling Location	Unit 3 FF Outlet		

Run Number		5	6	7	8
Run Date		8/11/09	8/11/09	8/11/09	8/11/09
Run Start Time	hh:mm	1237	1316	1351	1427
Run Stop Time	hh:mm	1301	1340	1415	1451
Carbon Dioxide Percentage	% CO_2	7.568	7.835	8.317	7.894
Oxygen Percentage	% O_2	12.179	11.950	11.389	11.762
Dry Standard Stack Flow Rate	DSCFM	56,561	53,539	53,539	53,539
Flow Rates taken from runs:		3-O-M4-1	3-O-M4-2	3-O-M4-2	3-O-M4-2

Sulfur Dioxide					
Formula Weight	Fwt	64.06	64.06	64.06	64.06
Concentration, ppm (dry)	ppmvd	-0.669	-0.320	-0.435	-0.749
Concentration, ppm@7%O2	ppm@7%O2	-1.066	-0.497	-0.636	-1.139

Nitrogen Oxides as NO2					
Formula Weight	Fwt	46.01	46.01	46.01	46.01
Concentration, ppm (dry)	ppmvd	61.460	62.780	68.990	56.780
Concentration, ppm@7%O2	ppm@7%O2	97.958	97.502	100.827	86.369
Emission Rate, lb/hr	lb/hr	24.907	24.082	26.464	21.781

Carbon Monoxide					
Formula Weight	Fwt	28.01	28.01	28.01	28.01
Concentration, ppm (dry)	ppmvd	16.642	14.781	14.264	14.607
Concentration, ppm@7%O2	ppm@7%O2	26.525	22.956	20.846	22.219

EMISSION RATE DATA SUMMARY

Client Name	Covanta Projects, Inc.	**Operator**	WHH
Plant Name	Huntington RRF	**Project #**	10639
Sampling Location	Unit 3 FF Outlet		

Run Number		9	10		
Run Date		8/11/09	8/11/09		
Run Start Time	hh:mm	1501	1546		
Run Stop Time	hh:mm	1525	1610		
Carbon Dioxide Percentage	% CO_2	7.992	7.897		
Oxygen Percentage	% O_2	11.678	11.733		
Dry Standard Stack Flow Rate	DSCFM	53,539	53,539		
Flow Rates taken from runs:		3-O-M4-2	3-O-M4-2		

Sulfur Dioxide					
Formula Weight	Fwt	64.06	64.06		
Concentration, ppm (dry)	ppmvd	-0.191	-0.159		
Concentration, ppm@7%O2	ppm@7%O2	-0.288	-0.241		

Nitrogen Oxides as NO2					
Formula Weight	Fwt	46.01	46.01		
Concentration, ppm (dry)	ppmvd	61.310	67.600		
Concentration, ppm@7%O2	ppm@7%O2	92.410	102.502		
Emission Rate, lb/hr	lb/hr	23.518	25.931		

Carbon Monoxide					
Formula Weight	Fwt	28.01	28.01		
Concentration, ppm (dry)	ppmvd	10.881	12.470		
Concentration, ppm@7%O2	ppm@7%O2	16.401	18.908		

APPENDIX B

Reference Method Field Data

O_2, CO_2, SO_2, NO_x, CO

Calibration Error Test at Run 1 . STRATA Version 3.2

Operator: Bill Harris
Plant Name: Huntington RRF
Location: Unit 1 Inlet and Outlet

Reference Cylinder Numbers

	Zero	Low-range	Mid-range	High-range
O2-S			XC033526B	SG895387ALB
CO2-S			XC033526B	SG895387ALB
SO2-S			CC41281	CC61542
NOx-S		FF837	CC21496	FF747
CO-S			SG9113307BAL	FF43261
O2-In			XC033526B	SG895387ALB
CO2-In			XC033526B	SG895387ALB
SO2-In			CC129649	XC022664B
THC-S		XC011445B	FF37711	XF003030B

Date/Time	8/13/2009		8:07:53		PASSED				
Analyte	O2-S	CO2-S	SO2-S	NOx-S	CO-S	O2-In	CO2-In	SO2-In	THC-S
Units	%	%	ppm	ppm	ppm	%	%	ppm	ppm
Zero Ref Cyl	0	0	0	0	0	0	0	0	0
Zero Avg	0.034	0.029	0.023	0.31	-0.064	0.007	-0.032	0.48	0.034
Zero Error%	0.2	0.2	0	0.1	0.1	0	0.2	0.1	0.1
Low Ref Cyl									10.44
Low Avg									10.422
Low Error%									0.1
Mid Ref Cyl	9.934	8.87	46.4	241.1	45.07	9.934	8.87	236.9	15.34
Mid Avg	9.944	8.904	46.047	241.05	45.71	9.968	8.825	238.37	15.349
Mid Error%	0	0.2	0.8	0	0.7	0.2	0.3	0.3	0
High Ref Cyl	21.9	17.79	91.63	482.4	89.29	21.9	17.79	490.7	26.15
High Avg	21.923	17.772	90.778	488.42	88.781	21.694	17.527	484.28	26.144
High Error%	0.1	0.1	0.9	1.2	0.6	0.9	1.5	1.3	0

Initial System Bias Check for Run 1 . STRATA Version 3.2

Operator:		Bill Harris
Plant Name:		Huntington RRF
Location:		Unit 1 Inlet and Outlet
	Reference Cylinder Numbers	
	Zero	Span
O2-S		XC033526B
CO2-S		XC033526B
SO2-S		CC41281
NOx-S		CC21496
CO-S		SG9113307BAL
O2-In		XC033526B
CO2-In		XC033526B
SO2-In		CC129649
THC-S		XC011445B

Date/Time	08/13/09	8:21:14 PASSED							
Analyte	O2-S	CO2-S	SO2-S	NOx-S	CO-S	O2-In	CO2-In	SO2-In	THC-S
Units	%	%	ppm	ppm	ppm	%	%	ppm	ppm
Zero Ref Cyl	0	0	0	0	0	0	0	0	0
Zero Cal	0.034	0.029	0.023	0.31	-0.064	0.007	-0.032	0.48	0.034
Zero Avg	0.063	-0.041	1.131	-0.23	0.236	0.303	-0.034	3.1	0.028
Zero Bias%	0.1	0.4	1.1	0.1	0.3	1.3	0	0.5	0
Zero Drift%									
Span Ref Cyl	9.934	8.87	46.4	241.1	45.07	9.934	8.87	236.9	10.44
Span Cal	9.944	8.904	46.047	241.05	45.71	9.968	8.825	238.37	10.422
Span Avg	9.876	8.819	46.186	240.18	43.407	10.01	8.906	225.15	10.404
Span Bias%	0.3	0.5	0.1	0.2	2.6	0.2	0.5	2.7	0.1
Span Drift%									

Test Run 1 STRATA Version 3.2

	O2-S	CO2-S	SO2-S	NOx-S	CO-S	O2-In	CO2-In	SO2-In	THC-S
	%	%	ppm	ppm	ppm	%	%	ppm	ppm
Begin calculating run averages									
08-13-2009 08:24:35	13.525	6.220	0.924	53.97	50.562	13.182	7.414	50.98	0.539
08-13-2009 08:25:35	13.235	6.505	0.819	58.56	73.407	13.015	7.700	45.57	0.521
08-13-2009 08:26:35	13.230	6.570	0.657	60.35	59.569	13.023	7.633	40.58	0.500
08-13-2009 08:27:35	12.788	6.950	0.452	58.33	57.261	11.737	8.289	45.41	0.462
08-13-2009 08:28:35	11.443	8.141	0.382	44.91	77.284	11.542	9.009	44.47	0.399
08-13-2009 08:29:35	11.725	7.864	0.312	41.71	39.441	11.930	8.878	42.88	0.363
08-13-2009 08:30:34	12.140	7.514	0.358	53.94	33.250	12.216	8.536	35.94	0.359
08-13-2009 08:31:34	12.128	7.489	0.366	67.13	35.382	11.726	8.725	34.39	0.337
08-13-2009 08:32:34	11.723	7.831	0.388	67.79	32.790	11.804	8.966	37.32	0.333
08-13-2009 08:33:34	11.650	7.900	0.355	60.93	38.928	11.290	8.969	35.87	0.299
08-13-2009 08:34:34	11.444	8.076	0.194	63.20	28.717	11.441	8.995	31.59	0.284
08-13-2009 08:35:34	10.931	8.506	0.226	72.77	27.488	10.659	9.078	36.32	0.265
08-13-2009 08:36:34	10.692	8.755	0.296	81.03	19.129	11.021	9.062	31.70	0.272
08-13-2009 08:37:34	10.543	8.806	0.296	100.49	19.521	10.594	9.104	32.54	0.266
08-13-2009 08:38:34	10.512	8.924	0.161	112.57	18.050	10.806	9.092	30.68	0.256
08-13-2009 08:39:34	10.925	8.524	0.172	115.88	12.273	11.439	9.031	28.49	0.226
08-13-2009 08:40:34	11.392	8.069	0.140	91.02	11.140	11.582	8.992	28.23	0.200
08-13-2009 08:41:34	11.536	7.914	0.177	71.58	13.495	12.022	8.909	27.82	0.196
08-13-2009 08:42:34	12.153	7.433	0.167	61.81	13.033	12.340	8.406	28.65	0.194
08-13-2009 08:43:34	11.990	7.520	0.183	51.62	16.540	11.716	8.821	32.61	0.177
08-13-2009 08:44:34	11.607	7.848	0.215	63.68	18.544	11.863	8.940	30.59	0.163
08-13-2009 08:45:34	11.961	7.612	0.145	72.41	14.041	12.351	8.599	29.59	0.153
08-13-2009 08:46:34	12.405	7.263	0.258	51.60	15.358	12.279	8.330	34.15	0.149
08-13-2009 08:47:34	11.739	7.757	0.210	52.49	20.065	11.294	8.967	41.12	0.144
Run Averages	O2-S	CO2-S	SO2-S	NOx-S	CO-S	O2-In	CO2-In	SO2-In	THC-S
	%	%	ppm	ppm	ppm	%	%	ppm	ppm
08-13-2009 08:47:34	11.810	7.749	0.328	67.91	31.065	11.787	8.684	35.74	0.294

Operator: Bill Harris
Plant Name: Huntington RRF
Location: Unit 1 Inlet and Outlet
Test Run 1 End

Final System Bias Check for Run 1 . STRATA Version 3.2

Operator:	Bill Harris
Plant Name:	Huntington RRF
Location:	Unit 1 Inlet and Outlet

Reference Cylinder Numbers

	Zero	Span
O2-S		XC033526B
CO2-S		XC033526B
SO2-S		CC41281
NOx-S		CC21496
CO-S		SG9113307BAL
O2-In		XC033526B
CO2-In		XC033526B
SO2-In		CC129649
THC-S		XC011445B

Date/Time	8/13/2009	8:56:56 PASSED							
Analyte	O2-S	CO2-S	SO2-S	NOx-S	CO-S	O2-In	CO2-In	SO2-In	THC-S
Units	%	%	ppm	ppm	ppm	%	%	ppm	ppm
Zero Ref Cyl	0	0	0	0	0	0	0	0	0
Zero Cal	0.034	0.029	0.023	0.31	-0.064	0.007	-0.032	0.48	0.034
Zero Avg	0.067	-0.039	1.131	-0.17	-0.745	0.293	-0.034	1.14	0.083
Zero Bias%	0.1	0.4	1.1	0.1	0.8	1.3	0	0.1	0.2
Zero Drift%	0	0	0	0	-1.1	0	0	-0.4	0.2
Span Ref Cyl	9.934	8.87	46.4	241.1	45.07	9.934	8.87	236.9	10.44
Span Cal	9.944	8.904	46.047	241.05	45.71	9.968	8.825	238.37	10.422
Span Avg	9.868	8.86	45.262	242.37	44.206	10.053	8.917	227.84	10.448
Span Bias%	0.3	0.2	-0.8	0.3	1.7	0.4	0.5	2.1	0.1
Span Drift%	0	0.2	0.9	0.5	0.9	0.2	0.1	0.5	0.1
Ini Zero Avg	0.063	-0.041	1.131	-0.23	0.236	0.303	-0.034	3.1	0.028
Ini Span Avg	9.876	8.819	46.186	240.18	43.407	10.01	8.906	225.15	10.404
Run Avg	11.81	7.749	0.328	67.91	31.065	11.787	8.684	35.74	0.294
Co	0.065	-0.04	1.131	-0.2	-0.255	0.298	-0.034	2.12	0.055
Cm	9.872	8.839	45.724	241.27	43.806	10.031	8.912	226.5	10.426
Correct Avg	11.897	7.781	-0.840	68.000	32.037	11.726	8.645	35.500	0.240

Test Run 2 STRATA Version 3.2

	O2-S	CO2-S	SO2-S	NOx-S	CO-S	O2-In	CO2-In	SO2-In	THC-S
	%	%	ppm	ppm	ppm	%	%	ppm	ppm
Begin calculating run averages									
08-13-2009 09:00:25	11.529	8.032	1.168	56.55	32.099	11.406	9.007	45.98	0.385
08-13-2009 09:01:25	11.616	7.986	0.813	63.39	25.128	11.356	8.968	42.23	0.364
08-13-2009 09:02:25	11.197	8.302	0.867	52.26	27.781	11.290	9.037	39.43	0.357
08-13-2009 09:03:25	11.621	7.947	0.743	52.30	27.902	11.615	8.915	35.41	0.365
08-13-2009 09:04:25	11.581	7.931	0.652	53.78	20.780	11.700	8.972	33.54	0.364
08-13-2009 09:05:25	11.737	7.858	0.447	50.55	25.668	11.670	8.943	30.64	0.369
08-13-2009 09:06:24	11.535	7.933	0.665	54.33	26.016	11.380	9.002	30.59	0.360
08-13-2009 09:07:24	11.048	8.373	0.619	73.25	17.283	10.750	9.058	33.62	0.355
08-13-2009 09:08:24	10.653	8.797	0.511	95.19	14.490	10.840	9.081	32.77	0.350
08-13-2009 09:09:24	10.514	8.932	0.711	100.90	15.055	10.394	9.118	31.41	0.334
08-13-2009 09:10:24	10.441	9.057	0.506	98.58	17.178	10.969	9.089	27.98	0.317
08-13-2009 09:11:24	10.882	8.631	0.490	86.78	12.885	11.433	9.043	26.18	0.315
08-13-2009 09:12:24	10.954	8.532	0.506	74.00	15.482	10.730	9.074	26.74	0.300
08-13-2009 09:13:24	10.115	9.342	0.485	93.54	19.129	10.378	9.157	28.10	0.296
08-13-2009 09:14:24	10.675	8.814	0.463	107.48	10.934	11.853	9.017	23.17	0.299
08-13-2009 09:15:24	12.100	7.524	0.474	57.00	10.128	12.535	8.324	19.74	0.313
08-13-2009 09:16:24	12.139	7.457	0.511	37.93	12.485	11.885	8.615	21.65	0.309
08-13-2009 09:17:25	11.441	8.068	0.479	49.71	17.451	11.189	9.025	22.10	0.298
08-13-2009 09:18:25	10.599	8.949	0.560	87.55	17.923	11.174	9.105	23.16	0.300
08-13-2009 09:19:25	11.709	7.939	0.522	91.11	11.829	12.769	8.510	19.16	0.304
08-13-2009 09:20:25	12.513	7.243	0.404	39.26	15.451	12.091	8.331	20.97	0.296
08-13-2009 09:21:25	10.910	8.751	0.485	52.45	20.955	10.399	9.130	27.38	0.286
08-13-2009 09:22:25	10.573	9.052	0.576	104.71	16.225	11.904	9.050	24.67	0.278
08-13-2009 09:23:25	12.261	7.470	0.474	58.68	11.422	13.284	8.069	19.11	0.292
Run Averages	O2-S	CO2-S	SO2-S	NOx-S	CO-S	O2-In	CO2-In	SO2-In	THC-S
	%	%	ppm	ppm	ppm	%	%	ppm	ppm
08-13-2009 09:23:25	11.264	8.288	0.589	70.47	18.408	11.458	8.902	28.58	0.325

Operator: Bill Harris
Plant Name: Huntington RRF
Location: Unit 1 Inlet and Outlet
Test Run 2 End

Final System Bias Check for Run 2 . STRATA Version 3.2

Operator: Bill Harris
Plant Name: Huntington RRF
Location: Unit 1 Inlet and Outlet

Reference Cylinder Numbers

	Zero	Span
O2-S		XC033526B
CO2-S		XC033526B
SO2-S		CC41281
NOx-S		CC21496
CO-S		SG9113307BAL
O2-In		XC033526B
CO2-In		XC033526B
SO2-In		CC129649
THC-S		XC011445B

Date/Time 8/13/2009 9:33:52 PASSED

Analyte	O2-S	CO2-S	SO2-S	NOx-S	CO-S	O2-In	CO2-In	SO2-In	THC-S
Units	%	%	ppm	ppm	ppm	%	%	ppm	ppm
Zero Ref Cyl	0	0	0	0	0	0	0	0	0
Zero Cal	0.034	0.029	0.023	0.31	-0.064	0.007	-0.032	0.48	0.034
Zero Avg	0.043	-0.003	1.131	-0.09	-1.458	0.458	-0.034	-2.28	0.002
Zero Bias%	0	0.2	1.2	0.1	1.6	2.1	0	0.6	0.1
Zero Drift%	-0.1	0.2	0	0	-0.8	0.8	0	-0.7	-0.3
Span Ref Cyl	9.934	8.87	46.4	241.1	45.07	9.934	8.87	236.9	10.44
Span Cal	9.944	8.904	46.047	241.05	45.71	9.968	8.825	238.37	10.422
Span Avg	9.835	8.865	43.924	242.44	43.261	10.138	8.916	224.37	10.33
Span Bias%	0.5	0.2	2.3	0.3	2.7	0.8	0.5	2.9	0.3
Span Drift%	-0.1	0	-1.5	0	-1.1	0.4	0	-0.7	-0.4
Ini Zero Avg	0.067	-0.039	1.131	-0.17	-0.745	0.293	-0.034	1.14	0.083
Ini Span Avg	9.868	8.86	45.262	242.37	44.206	10.053	8.917	227.84	10.448
Run Avg	11.264	8.288	0.589	70.47	18.408	11.458	8.902	28.58	0.325
Co	0.055	-0.021	1.13	-0.13	-1.101	0.375	-0.034	-0.57	0.042
Cm	9.852	8.862	44.59	242.41	43.733	10.095	8.917	226.11	10.389
Correct Avg	11.366	8.297	-0.579	70.180	19.611	11.327	8.855	30.470	0.285

Test Run 3 STRATA Version 3.2

	O2-S	CO2-S	SO2-S	NOx-S	CO-S	O2-In	CO2-In	SO2-In	THC-S
	%	%	ppm	ppm	ppm	%	%	ppm	ppm
Begin calculating run averages									
08-13-2009 09:37:05	11.888	7.785	1.327	46.83	24.480	11.314	8.817	18.64	0.294
08-13-2009 09:38:05	10.824	8.807	1.174	66.51	20.075	10.459	9.108	24.20	0.272
08-13-2009 09:39:05	10.625	9.002	1.110	97.20	11.291	11.390	9.069	22.00	0.257
08-13-2009 09:40:05	11.806	7.877	0.953	75.71	6.691	12.508	8.546	18.57	0.253
08-13-2009 09:41:05	12.433	7.305	0.867	36.96	10.634	12.352	8.300	16.87	0.258
08-13-2009 09:42:04	12.414	7.341	0.819	32.80	14.441	12.159	8.283	19.65	0.255
08-13-2009 09:43:04	10.872	8.873	0.905	46.07	19.097	9.801	9.141	32.41	0.228
08-13-2009 09:44:04	10.217	9.443	0.722	91.59	13.448	11.616	9.103	28.54	0.235
08-13-2009 09:45:04	12.363	7.415	0.792	71.03	5.582	13.455	7.910	17.76	0.264
08-13-2009 09:46:04	13.625	6.304	0.722	37.53	10.961	13.398	7.140	14.63	0.289
08-13-2009 09:47:04	12.723	7.148	0.652	40.71	18.855	11.753	8.462	16.97	0.248
08-13-2009 09:48:04	11.017	8.721	0.689	61.73	17.871	10.223	9.114	25.01	0.223
08-13-2009 09:49:04	9.392	10.205	0.716	96.97	13.588	9.973	9.281	32.46	0.217
08-13-2009 09:50:04	10.135	9.490	0.781	116.54	6.922	11.168	9.113	24.81	0.221
08-13-2009 09:51:04	11.420	8.230	0.635	81.67	6.257	12.601	8.726	18.56	0.222
08-13-2009 09:52:04	12.876	6.919	0.555	33.22	4.806	13.333	7.583	15.43	0.252
08-13-2009 09:53:04	12.854	6.913	0.635	28.60	9.755	12.605	8.053	17.85	0.236
08-13-2009 09:54:04	12.316	7.419	0.522	40.99	14.463	12.516	8.423	18.72	0.233
08-13-2009 09:55:04	11.991	7.743	0.689	56.75	18.861	11.722	8.832	21.39	0.238
08-13-2009 09:56:04	11.269	8.461	0.571	87.44	20.383	10.901	9.056	28.08	0.236
08-13-2009 09:57:04	10.024	9.635	0.528	113.01	19.629	10.868	9.172	32.70	0.229
08-13-2009 09:58:04	11.319	8.304	0.533	107.72	11.722	12.550	8.757	32.47	0.232
08-13-2009 09:59:04	12.641	7.124	0.571	57.00	12.729	12.770	7.912	37.99	0.245
08-13-2009 10:00:04	12.134	7.566	0.598	51.53	18.388	11.880	8.739	43.58	0.229
Run Averages	O2-S	CO2-S	SO2-S	NOx-S	CO-S	O2-In	CO2-In	SO2-In	THC-S
	%	%	ppm	ppm	ppm	%	%	ppm	ppm
08-13-2009 10:00:04	11.632	8.085	0.753	65.68	13.796	11.804	8.610	24.14	0.244

Operator: Bill Harris
Plant Name: Huntington RRF
Location: Unit 1 Inlet and Outlet
Test Run 3 End

Final System Bias Check for Run 3 . STRATA Version 3.2

Operator:		Bill Harris
Plant Name:		Huntington RRF
Location:		Unit 1 Inlet and Outlet
	Reference Cylinder Numbers	
	Zero	Span
O2-S		XC033526B
CO2-S		XC033526B
SO2-S		CC41281
NOx-S		CC21496
CO-S		SG9113307BAL
O2-In		XC033526B
CO2-In		XC033526B
SO2-In		CC129649
THC-S		XC011445B

Date/Time	8/13/2009	10:09:09 PASSED							
Analyte	O2-S	CO2-S	SO2-S	NOx-S	CO-S	O2-In	CO2-In	SO2-In	THC-S
Units	%	%	ppm	ppm	ppm	%	%	ppm	ppm
Zero Ref Cyl	0	0	0	0	0	0	0	0	0
Zero Cal	0.034	0.029	0.023	0.31	-0.064	0.007	-0.032	0.48	0.034
Zero Avg	0.041	0.006	1.777	3.26	-1.258	0.511	-0.031	-1.71	-0.043
Zero Bias%	0	0.1	1.9	0.6	1.3	2.3	0	0.4	0.3
Zero Drift%	0	0.1	0.7	0.7	0.2	0.2	0	0.1	-0.1
Span Ref Cyl	9.934	8.87	46.4	241.1	45.07	9.934	8.87	236.9	10.44
Span Cal	9.944	8.904	46.047	241.05	45.71	9.968	8.825	238.37	10.422
Span Avg	9.62	8.705	41.847	242.13	43.003	9.986	8.903	231.14	10.456
Span Bias%	1.5	1.1	4.6	0.2	3	0.1	0.4	1.5	0.1
Span Drift%	-1	-0.9	-2.3	-0.1	-0.3	-0.7	-0.1	1.4	0.4
Ini Zero Avg	0.043	-0.003	1.131	-0.09	-1.458	0.458	-0.034	-2.28	0.002
Ini Span Avg	9.835	8.865	43.924	242.44	43.261	10.138	8.916	224.37	10.33
Run Avg	11.632	8.085	0.753	65.68	13.796	11.804	8.61	24.14	0.244
Co	0.042	0.001	1.45	1.58	-1.358	0.484	-0.033	-1.99	-0.02
Cm	9.728	8.785	42.89	242.29	43.132	10.062	8.909	227.76	10.393
Correct Avg	11.887	8.163	-0.785	64.200	15.351	11.742	8.573	26.940	0.266

Test Run 4 STRATA Version 3.2

	O2-S	CO2-S	SO2-S	NOx-S	CO-S	O2-In	CO2-In	SO2-In	THC-S
	%	%	ppm	ppm	ppm	%	%	ppm	ppm
Begin calculating run averages									
08-13-2009 10:11:39	11.771	7.851	2.229	53.04	17.764	12.086	8.928	31.28	0.259
08-13-2009 10:12:39	11.317	8.283	1.798	63.95	16.363	11.038	9.027	34.06	0.231
08-13-2009 10:13:39	10.588	8.937	1.390	86.26	17.809	11.648	9.066	32.92	0.219
08-13-2009 10:14:39	11.628	7.931	1.341	74.36	10.112	12.337	8.611	29.85	0.212
08-13-2009 10:15:39	11.814	7.709	1.120	58.15	14.967	12.120	8.772	34.64	0.207
08-13-2009 10:16:39	11.549	7.978	0.975	62.62	15.000	11.606	8.967	39.95	0.200
08-13-2009 10:17:39	11.019	8.476	0.889	75.47	12.979	11.362	9.053	42.88	0.196
08-13-2009 10:18:39	11.280	8.293	0.889	80.62	11.426	11.620	9.025	39.87	0.187
08-13-2009 10:19:39	11.498	8.077	0.652	65.44	9.389	12.004	8.946	39.53	0.189
08-13-2009 10:20:39	11.876	7.753	0.770	53.84	11.622	11.966	8.704	38.40	0.195
08-13-2009 10:21:39	11.435	8.116	0.630	56.85	18.385	11.426	9.028	37.70	0.187
08-13-2009 10:22:39	11.176	8.347	0.700	72.89	14.410	11.604	9.038	36.84	0.186
08-13-2009 10:23:39	11.872	7.719	0.555	73.67	13.141	12.566	8.456	36.13	0.192
08-13-2009 10:24:39	12.372	7.258	0.705	56.71	17.284	12.286	8.288	41.34	0.195
08-13-2009 10:25:39	11.765	7.791	0.598	57.92	18.773	11.523	8.928	46.51	0.184
08-13-2009 10:26:39	11.086	8.419	0.635	74.63	14.255	11.208	9.062	48.13	0.179
08-13-2009 10:27:39	11.052	8.550	0.560	87.27	13.072	11.510	9.040	42.84	0.190
08-13-2009 10:28:39	11.633	7.976	0.533	77.33	10.729	12.043	8.827	44.04	0.191
08-13-2009 10:29:39	11.827	7.777	0.625	57.67	11.051	11.883	8.811	52.16	0.193
08-13-2009 10:30:39	11.328	8.228	0.560	60.88	16.623	11.100	9.054	56.71	0.185
08-13-2009 10:31:39	10.941	8.626	0.565	85.92	13.873	11.667	9.050	55.55	0.190
08-13-2009 10:32:39	11.766	7.860	0.538	82.71	7.643	12.012	8.701	54.05	0.190
08-13-2009 10:33:39	11.389	8.157	0.603	66.29	12.397	11.163	9.036	59.98	0.184
08-13-2009 10:34:39	11.137	8.393	0.458	82.77	10.983	11.812	9.001	50.20	0.184
Run Averages	O2-S	CO2-S	SO2-S	NOx-S	CO-S	O2-In	CO2-In	SO2-In	THC-S
	%	%	ppm	ppm	ppm	%	%	ppm	ppm
08-13-2009 10:34:39	11.463	8.104	0.847	69.47	13.752	11.733	8.893	42.73	0.197

Operator: Bill Harris
Plant Name: Huntington RRF
Location: Unit 1 Inlet and Outlet
Test Run 4 End

Final System Bias Check for Run 4 . STRATA Version 3.2

Operator:	Bill Harris
Plant Name:	Huntington RRF
Location:	Unit 1 Inlet and Outlet

	Reference Cylinder Numbers	
	Zero	Span
O2-S		XC033526B
CO2-S		XC033526B
SO2-S		CC41281
NOx-S		CC21496
CO-S		SG9113307BAL
O2-In		XC033526B
CO2-In		XC033526B
SO2-In		CC129649
THC-S		XC011445B

Date/Time	8/13/2009	10:43:49 PASSED							
Analyte	O2-S	CO2-S	SO2-S	NOx-S	CO-S	O2-In	CO2-In	SO2-In	THC-S
Units	%	%	ppm	ppm	ppm	%	%	ppm	ppm
Zero Ref Cyl	0	0	0	0	0	0	0	0	0
Zero Cal	0.034	0.029	0.023	0.31	-0.064	0.007	-0.032	0.48	0.034
Zero Avg	0.041	0.016	1.131	4.45	-1.859	0.473	-0.03	-1.37	-0.058
Zero Bias%	0	0.1	1.2	0.9	2	2.1	0	0.4	0.3
Zero Drift%	0	0.1	-0.7	0.2	-0.7	-0.2	0	0.1	-0.1
Span Ref Cyl	9.934	8.87	46.4	241.1	45.07	9.934	8.87	236.9	10.44
Span Cal	9.944	8.904	46.047	241.05	45.71	9.968	8.825	238.37	10.422
Span Avg	9.362	8.416	42.17	241.82	42.806	10.012	8.88	229.71	10.361
Span Bias%	2.7	2.7	4.2	0.2	3.3	0.2	0.3	1.8	0.2
Span Drift%	-1.2	-1.6	0.4	-0.1	-0.2	0.1	-0.1	-0.3	-0.3
Ini Zero Avg	0.041	0.006	1.777	3.26	-1.258	0.511	-0.031	-1.71	-0.043
Ini Span Avg	9.62	8.705	41.847	242.13	43.003	9.986	8.903	231.14	10.456
Run Avg	11.463	8.104	0.847	69.47	13.752	11.733	8.893	42.73	0.197
Co	0.041	0.011	1.45	3.85	-1.559	0.492	-0.031	-1.54	-0.051
Cm	9.491	8.56	42.01	241.98	42.904	9.999	8.892	230.43	10.408
Correct Avg	12.008	8.397	-0.694	66.440	15.520	11.746	8.871	45.210	0.247

Test Run 5 STRATA Version 3.2

	O2-S	CO2-S	SO2-S	NOx-S	CO-S	O2-In	CO2-In	SO2-In	THC-S
	%	%	ppm	ppm	ppm	%	%	ppm	ppm
Begin calculating run averages									
08-13-2009 10:46:15	11.890	7.609	1.639	65.02	9.108	11.427	8.742	34.56	0.217
08-13-2009 10:47:15	11.437	7.962	1.363	61.82	9.330	11.138	8.999	40.96	0.183
08-13-2009 10:48:15	11.475	7.975	1.083	50.69	9.824	11.979	8.761	31.20	0.177
08-13-2009 10:49:15	12.115	7.464	1.023	53.69	8.436	12.281	8.318	25.06	0.189
08-13-2009 10:50:15	12.337	7.322	0.969	59.05	10.030	11.761	8.247	24.08	0.184
08-13-2009 10:51:15	11.206	8.289	1.045	71.77	12.537	11.663	9.002	25.48	0.171
08-13-2009 10:52:15	12.253	7.354	0.862	73.37	9.932	12.773	7.981	19.22	0.194
08-13-2009 10:53:15	12.598	7.061	0.765	55.36	16.743	12.368	8.095	17.41	0.196
08-13-2009 10:54:15	12.443	7.222	0.829	54.99	18.973	12.587	8.078	18.13	0.196
08-13-2009 10:55:15	12.262	7.380	0.808	50.76	19.700	11.744	8.576	21.42	0.177
08-13-2009 10:56:15	11.354	8.225	0.808	44.90	26.676	11.010	9.055	22.82	0.163
08-13-2009 10:57:15	10.767	8.761	0.603	66.59	20.905	10.735	9.100	24.57	0.151
08-13-2009 10:58:15	10.758	8.748	0.792	83.19	13.781	11.682	9.067	22.09	0.164
08-13-2009 10:59:15	12.028	7.611	0.738	80.21	9.547	11.913	8.636	16.13	0.174
08-13-2009 11:00:15	11.618	7.967	0.705	67.83	11.809	10.602	9.059	18.42	0.155
08-13-2009 11:01:15	10.552	8.993	0.560	83.26	15.139	10.655	9.185	19.47	0.152
08-13-2009 11:02:15	11.682	7.932	0.738	82.13	9.969	12.337	8.836	14.39	0.175
08-13-2009 11:03:15	12.757	7.015	0.495	51.25	12.081	11.594	8.421	14.47	0.183
08-13-2009 11:04:15	11.015	8.626	0.630	56.11	20.812	10.368	9.190	24.50	0.160
08-13-2009 11:05:15	11.416	8.204	0.468	75.64	15.010	12.016	8.934	20.41	0.163
08-13-2009 11:06:14	12.391	7.328	0.567	44.08	12.332	11.886	8.707	19.20	0.171
08-13-2009 11:07:14	11.501	8.156	0.533	51.38	16.390	9.977	9.141	23.90	0.158
08-13-2009 11:08:14	10.459	9.138	0.490	103.39	14.801	11.109	9.168	23.12	0.160
08-13-2009 11:09:14	12.123	7.581	0.414	87.44	6.673	12.675	8.574	17.25	0.170
Run Averages	O2-S	CO2-S	SO2-S	NOx-S	CO-S	O2-In	CO2-In	SO2-In	THC-S
	%	%	ppm	ppm	ppm	%	%	ppm	ppm
08-13-2009 11:09:15	11.685	7.914	0.789	65.59	13.770	11.595	8.745	22.44	0.174

Operator: Bill Harris
Plant Name: Huntington RRF
Location: Unit 1 Inlet and Outlet
Test Run 5 End

Final System Bias Check for Run 5 . STRATA Version 3.2

Operator:	Bill Harris
Plant Name:	Huntington RRF
Location:	Unit 1 Inlet and Outlet

Reference Cylinder Numbers

	Zero	Span
O2-S		XC033526B
CO2-S		XC033526B
SO2-S		CC41281
NOx-S		CC21496
CO-S		SG9113307BAL
O2-In		XC033526B
CO2-In		XC033526B
SO2-In		CC129649
THC-S		XC011445B

Date/Time	8/13/2009	11:22:25 PASSED							
Analyte	O2-S	CO2-S	SO2-S	NOx-S	CO-S	O2-In	CO2-In	SO2-In	THC-S
Units	%	%	ppm	ppm	ppm	%	%	ppm	ppm
Zero Ref Cyl	0	0	0	0	0	0	0	0	0
Zero Cal	0.034	0.029	0.023	0.31	-0.064	0.007	-0.032	0.48	0.034
Zero Avg	0.048	0.068	0.808	0.18	-2.061	0.201	-0.036	-2.39	-0.049
Zero Bias%	0.1	0.2	0.9	0	2.2	0.9	0	0.6	0.3
Zero Drift%	0	0.3	-0.4	-0.9	-0.2	-1.2	0	-0.2	0
Span Ref Cyl	9.934	8.87	46.4	241.1	45.07	9.934	8.87	236.9	10.44
Span Cal	9.944	8.904	46.047	241.05	45.71	9.968	8.825	238.37	10.422
Span Avg	9.983	8.948	43.832	240.09	43.406	10.146	8.944	233.98	10.422
Span Bias%	0.2	0.2	2.4	0.2	2.6	0.8	0.7	0.9	0
Span Drift%	2.8	3	1.8	-0.4	0.7	0.6	0.4	0.9	0.2
Ini Zero Avg	0.041	0.016	1.131	4.45	-1.859	0.473	-0.03	-1.37	-0.058
Ini Span Avg	9.362	8.416	42.17	241.82	42.806	10.012	8.88	229.71	10.361
Run Avg	11.685	7.914	0.789	65.59	13.77	11.595	8.745	22.44	0.174
Co	0.045	0.042	0.97	2.31	-1.96	0.337	-0.033	-1.88	-0.054
Cm	9.672	8.682	43.00	240.96	43.106	10.079	8.912	231.84	10.392
Correct Avg	12.010	8.081	-0.199	63.930	15.732	11.479	8.704	24.650	0.228

Test Run 6 STRATA Version 3.2

	O2-S	CO2-S	SO2-S	NOx-S	CO-S	O2-In	CO2-In	SO2-In	THC-S
	%	%	ppm	ppm	ppm	%	%	ppm	ppm
Begin calculating run averages									
08-13-2009 11:25:13	11.172	8.452	0.560	94.85	8.081	10.737	9.100	20.29	0.215
08-13-2009 11:26:14	11.368	8.286	0.662	83.63	6.951	10.971	9.083	21.66	0.190
08-13-2009 11:27:14	11.886	7.815	0.485	67.29	7.823	12.065	8.893	21.20	0.195
08-13-2009 11:28:14	12.609	7.180	0.501	48.41	8.416	11.811	8.550	21.95	0.192
08-13-2009 11:29:14	11.828	7.845	0.485	48.78	12.456	11.035	9.063	27.44	0.162
08-13-2009 11:30:14	11.424	8.183	0.485	52.29	9.932	11.035	9.084	29.85	0.160
08-13-2009 11:31:14	11.536	8.148	0.463	65.88	7.204	11.304	9.062	31.23	0.164
08-13-2009 11:32:14	11.704	7.988	0.409	60.13	7.805	10.848	9.066	30.39	0.167
08-13-2009 11:33:14	10.567	8.993	0.441	64.26	13.960	9.735	9.218	33.68	0.160
08-13-2009 11:34:14	10.538	8.980	0.312	105.87	6.038	10.719	9.153	27.14	0.171
08-13-2009 11:35:14	11.536	8.004	0.361	101.35	3.779	11.972	8.905	25.43	0.170
08-13-2009 11:36:14	12.195	7.448	0.404	51.47	7.193	11.388	8.803	28.50	0.164
08-13-2009 11:37:14	11.298	8.220	0.377	53.60	12.074	10.847	9.115	30.97	0.159
08-13-2009 11:38:14	11.261	8.334	0.420	76.74	9.724	11.343	9.086	28.29	0.169
08-13-2009 11:39:14	11.660	7.990	0.371	72.32	11.288	11.402	9.056	28.12	0.173
08-13-2009 11:40:14	11.628	7.959	0.409	63.25	13.035	11.456	9.064	29.57	0.170
08-13-2009 11:41:14	11.673	7.980	0.188	62.18	14.075	11.124	9.068	31.61	0.170
08-13-2009 11:42:14	10.846	8.717	0.199	72.95	13.160	9.926	9.199	38.04	0.160
08-13-2009 11:43:14	10.225	9.340	0.296	104.66	9.221	10.676	9.214	38.63	0.159
08-13-2009 11:44:14	11.596	8.043	0.177	90.85	4.658	12.282	8.870	32.05	0.171
08-13-2009 11:45:14	12.639	7.114	0.167	50.54	6.858	12.158	8.429	32.31	0.192
08-13-2009 11:46:14	12.058	7.632	0.291	51.90	15.901	11.310	9.012	33.94	0.170
08-13-2009 11:47:14	11.259	8.374	0.172	62.14	13.633	10.820	9.139	38.51	0.150
08-13-2009 11:48:14	10.833	8.822	0.183	63.80	12.206	10.087	9.190	40.21	0.140
Run Averages	O2-S	CO2-S	SO2-S	NOx-S	CO-S	O2-In	CO2-In	SO2-In	THC-S
	%	%	ppm	ppm	ppm	%	%	ppm	ppm
08-13-2009 11:48:14	11.472	8.160	0.367	69.55	9.811	11.127	9.018	30.04	0.171

Operator: Bill Harris
Plant Name: Huntington RRF
Location: Unit 1 Inlet and Outlet
Test Run 6 End

Final System Bias Check for Run 6 . STRATA Version 3.2

Operator:	Bill Harris
Plant Name:	Huntington RRF
Location:	Unit 1 Inlet and Outlet

Reference Cylinder Numbers

	Zero	Span
O2-S		XC033526B
CO2-S		XC033526B
SO2-S		CC41281
NOx-S		CC21496
CO-S		SG9113307BAL
O2-In		XC033526B
CO2-In		XC033526B
SO2-In		CC129649
THC-S		XC011445B

Date/Time	8/13/2009	11:57:26 PASSED							
Analyte	O2-S	CO2-S	SO2-S	NOx-S	CO-S	O2-In	CO2-In	SO2-In	THC-S
Units	%	%	ppm	ppm	ppm	%	%	ppm	ppm
Zero Ref Cyl	0	0	0	0	0	0	0	0	0
Zero Cal	0.034	0.029	0.023	0.31	-0.064	0.007	-0.032	0.48	0.034
Zero Avg	0.031	0.035	0.808	-0.12	-2.061	0.178	-0.035	-4.16	-0.074
Zero Bias%	0	0	0.9	0.1	2.2	0.8	0	0.9	0.4
Zero Drift%	-0.1	-0.2	0	-0.1	0	-0.1	0	-0.4	-0.1
Span Ref Cyl	9.934	8.87	46.4	241.1	45.07	9.934	8.87	236.9	10.44
Span Cal	9.944	8.904	46.047	241.05	45.71	9.968	8.825	238.37	10.422
Span Avg	9.928	8.916	45.124	242.86	43.078	10.068	8.921	234.95	10.499
Span Bias%	0.1	0.1	1	0.4	2.9	0.5	0.5	0.7	0.3
Span Drift%	-0.3	-0.2	1.4	0.6	-0.4	-0.4	-0.1	0.2	0.3
Ini Zero Avg	0.048	0.068	0.808	0.18	-2.061	0.201	-0.036	-2.39	-0.049
Ini Span Avg	9.983	8.948	43.832	240.09	43.406	10.146	8.944	233.98	10.422
Run Avg	11.472	8.16	0.367	69.55	9.811	11.127	9.018	30.04	0.171
Co	0.039	0.051	0.81	0.03	-2.061	0.189	-0.035	-3.27	-0.062
Cm	9.956	8.932	44.48	241.48	43.242	10.107	8.933	234.46	10.46
Correct Avg	11.453	8.099	-0.469	69.420	11.811	10.956	8.954	33.200	0.230

Test Run 7 STRATA Version 3.2

	O2-S	CO2-S	SO2-S	NOx-S	CO-S	O2-In	CO2-In	SO2-In	THC-S
	%	%	ppm	ppm	ppm	%	%	ppm	ppm
Begin calculating run averages									
08-13-2009 12:00:05	12.494	7.334	0.893	72.76	15.288	11.754	8.558	32.72	0.201
08-13-2009 12:01:05	11.802	7.910	0.678	89.22	20.889	11.028	9.056	39.26	0.179
08-13-2009 12:02:04	11.648	8.065	0.665	107.24	16.095	11.676	8.961	31.20	0.177
08-13-2009 12:03:04	12.038	7.681	0.474	97.49	8.601	11.691	8.971	31.91	0.167
08-13-2009 12:04:04	11.995	7.735	0.420	91.30	13.687	11.927	8.954	29.34	0.158
08-13-2009 12:05:04	12.195	7.622	0.414	74.33	17.671	11.422	8.809	29.39	0.153
08-13-2009 12:06:04	10.804	8.893	0.344	88.59	20.712	9.786	9.201	34.74	0.139
08-13-2009 12:07:04	10.224	9.387	0.334	126.06	9.929	10.760	9.188	28.14	0.130
08-13-2009 12:08:04	11.697	7.977	0.221	87.56	3.726	12.298	8.760	19.97	0.140
08-13-2009 12:09:04	12.566	7.211	0.097	41.04	7.529	12.171	8.431	21.30	0.144
08-13-2009 12:10:04	12.176	7.529	0.081	40.65	13.168	11.817	8.849	22.70	0.138
08-13-2009 12:11:04	11.916	7.782	0.134	57.14	12.524	11.938	8.997	21.58	0.148
08-13-2009 12:12:04	12.006	7.693	0.156	59.90	11.630	11.819	8.981	21.49	0.150
08-13-2009 12:13:04	12.057	7.675	0.075	64.13	11.615	11.992	8.805	20.22	0.144
08-13-2009 12:14:04	11.464	8.281	0.134	53.96	16.707	10.178	9.125	23.90	0.136
08-13-2009 12:15:04	10.189	9.497	0.107	87.04	17.228	10.972	9.207	22.29	0.134
08-13-2009 12:16:04	11.827	7.914	0.005	72.91	6.183	12.353	8.731	15.25	0.144
08-13-2009 12:17:04	12.104	7.649	-0.048	41.82	8.743	11.424	8.902	17.02	0.139
08-13-2009 12:18:04	11.882	7.846	0.070	56.44	12.856	12.755	8.653	14.53	0.148
08-13-2009 12:19:04	13.105	6.788	-0.016	41.36	11.059	12.653	7.853	13.02	0.163
08-13-2009 12:20:04	12.250	7.520	0.011	42.72	19.859	11.887	8.921	17.56	0.137
08-13-2009 12:21:04	12.134	7.660	-0.140	52.44	14.620	12.343	8.733	20.89	0.138
08-13-2009 12:22:04	12.450	7.358	-0.145	48.44	14.558	11.940	8.564	24.37	0.142
08-13-2009 12:23:04	11.883	7.859	-0.038	57.73	17.645	11.977	8.920	20.73	0.134
Run Averages	O2-S	CO2-S	SO2-S	NOx-S	CO-S	O2-In	CO2-In	SO2-In	THC-S
	%	%	ppm	ppm	ppm	%	%	ppm	ppm
08-13-2009 12:23:04	11.872	7.869	0.205	68.82	13.438	11.690	8.839	23.90	0.149

Operator: Bill Harris
Plant Name: Huntington RRF
Location: Unit 1 Inlet and Outlet
Test Run 7 End

Final System Bias Check for Run 7 . STRATA Version 3.2

Operator:	Bill Harris
Plant Name:	Huntington RRF
Location:	Unit 1 Inlet and Outlet

Reference Cylinder Numbers

	Zero	Span
O2-S		XC033526B
CO2-S		XC033526B
SO2-S		CC41281
NOx-S		CC21496
CO-S		SG9113307BAL
O2-In		XC033526B
CO2-In		XC033526B
SO2-In		CC129649
THC-S		XC011445B

Date/Time	8/13/2009	12:32:14 PASSED							
Analyte	O2-S	CO2-S	SO2-S	NOx-S	CO-S	O2-In	CO2-In	SO2-In	THC-S
Units	%	%	ppm	ppm	ppm	%	%	ppm	ppm
Zero Ref Cyl	0	0	0	0	0	0	0	0	0
Zero Cal	0.034	0.029	0.023	0.31	-0.064	0.007	-0.032	0.48	0.034
Zero Avg	0.034	0.039	0.485	-0.19	-2.061	0.313	-0.03	-4.22	-0.071
Zero Bias%	0	0.1	0.5	0.1	2.2	1.4	0	1	0.3
Zero Drift%	0	0	-0.4	0	0	0.6	0	0	0
Span Ref Cyl	9.934	8.87	46.4	241.1	45.07	9.934	8.87	236.9	10.44
Span Cal	9.944	8.904	46.047	241.05	45.71	9.968	8.825	238.37	10.422
Span Avg	9.954	8.922	42.492	243.25	42.403	10.143	8.927	230.38	10.209
Span Bias%	0	0.1	3.9	0.5	3.7	0.8	0.6	1.6	0.7
Span Drift%	0.1	0	-2.9	0.1	-0.8	0.3	0	-0.9	-1
Ini Zero Avg	0.031	0.035	0.808	-0.12	-2.061	0.178	-0.035	-4.16	-0.074
Ini Span Avg	9.928	8.916	45.124	242.86	43.078	10.068	8.921	234.95	10.499
Run Avg	11.872	7.869	0.205	68.82	13.438	11.69	8.839	23.9	0.149
Co	0.033	0.037	0.65	-0.15	-2.061	0.246	-0.033	-4.19	-0.072
Cm	9.941	8.919	43.81	243.06	42.741	10.105	8.924	232.66	10.354
Correct Avg	11.870	7.821	-0.475	68.380	15.592	11.531	8.785	28.090	0.222

Test Run 8 STRATA Version 3.2

	O2-S	CO2-S	SO2-S	NOx-S	CO-S	O2-In	CO2-In	SO2-In	THC-S
	%	%	ppm	ppm	ppm	%	%	ppm	ppm
Begin calculating run averages									
08-13-2009 12:35:12	11.737	7.901	0.649	58.47	14.978	11.405	9.040	23.56	0.167
08-13-2009 12:36:12	11.850	7.855	0.350	57.49	13.894	11.610	9.016	25.80	0.150
08-13-2009 12:37:12	12.276	7.474	0.161	47.86	14.142	12.465	8.437	23.46	0.154
08-13-2009 12:38:12	12.746	7.063	0.296	40.66	18.012	11.875	8.360	26.25	0.152
08-13-2009 12:39:12	11.829	7.879	0.172	42.53	24.176	11.471	9.056	27.84	0.128
08-13-2009 12:40:12	11.776	7.966	0.086	43.95	18.472	11.347	9.048	27.14	0.122
08-13-2009 12:41:12	11.335	8.361	-0.038	41.76	16.546	10.972	9.106	26.16	0.110
08-13-2009 12:42:12	11.113	8.620	0.021	49.21	14.340	10.310	9.136	24.66	0.109
08-13-2009 12:43:12	10.233	9.409	-0.156	63.89	14.351	10.292	9.224	23.74	0.110
08-13-2009 12:44:12	11.073	8.611	-0.081	94.50	6.035	11.027	9.099	17.75	0.116
08-13-2009 12:45:12	10.819	8.843	-0.183	75.29	8.377	10.358	9.179	20.25	0.104
08-13-2009 12:46:12	10.619	9.025	-0.215	87.53	8.439	11.075	9.145	17.61	0.100
08-13-2009 12:47:12	11.691	8.013	-0.167	74.96	4.426	11.994	8.914	14.99	0.109
08-13-2009 12:48:12	11.849	7.848	-0.145	54.94	9.222	11.321	9.051	16.11	0.109
08-13-2009 12:49:12	10.852	8.829	-0.285	79.96	11.620	10.415	9.180	22.15	0.104
08-13-2009 12:50:12	10.998	8.737	-0.301	105.38	11.002	11.602	9.102	16.04	0.115
08-13-2009 12:51:12	11.899	7.890	-0.231	89.20	5.235	11.815	9.005	13.89	0.117
08-13-2009 12:52:12	11.567	8.160	-0.253	79.30	6.612	10.896	9.094	17.31	0.111
08-13-2009 12:53:12	11.030	8.710	-0.485	103.51	8.963	11.625	9.114	15.31	0.120
08-13-2009 12:54:12	12.320	7.520	-0.199	93.14	5.280	12.617	8.420	11.09	0.131
08-13-2009 12:55:12	12.449	7.369	-0.226	63.57	9.489	12.083	8.702	11.94	0.125
08-13-2009 12:56:12	12.082	7.670	-0.291	70.26	11.889	11.718	8.963	11.75	0.117
08-13-2009 12:57:12	11.350	8.352	-0.425	79.19	13.080	10.741	9.120	14.57	0.113
08-13-2009 12:58:12	10.791	8.870	-0.317	111.04	9.613	11.071	9.143	15.22	0.115
Run Averages	O2-S	CO2-S	SO2-S	NOx-S	CO-S	O2-In	CO2-In	SO2-In	THC-S
	%	%	ppm	ppm	ppm	%	%	ppm	ppm
08-13-2009 12:58:12	11.512	8.207	-0.094	71.14	11.594	11.338	8.986	19.36	0.121

Operator: Bill Harris
Plant Name: Huntington RRF
Location: Unit 1 Inlet and Outlet
Test Run 8 End

Final System Bias Check for Run 8 . STRATA Version 3.2

Operator: Bill Harris
Plant Name: Huntington RRF
Location: Unit 1 Inlet and Outlet

	Reference Cylinder Numbers	
	Zero	Span
O2-S		XC033526B
CO2-S		XC033526B
SO2-S		CC41281
NOx-S		CC21496
CO-S		SG9113307BAL
O2-In		XC033526B
CO2-In		XC033526B
SO2-In		CC129649
THC-S		XC011445B

Date/Time	8/13/2009	13:07:19 PASSED							
Analyte	O2-S	CO2-S	SO2-S	NOx-S	CO-S	O2-In	CO2-In	SO2-In	THC-S
Units	%	%	ppm	ppm	ppm	%	%	ppm	ppm
Zero Ref Cyl	0	0	0	0	0	0	0	0	0
Zero Cal	0.034	0.029	0.023	0.31	-0.064	0.007	-0.032	0.48	0.034
Zero Avg	0.034	0.048	0.485	-0.1	-2.061	0.417	-0.03	-4.4	-0.087
Zero Bias%	0	0.1	0.5	0.1	2.2	1.9	0	1	0.4
Zero Drift%	0	0.1	0	0	0	0.5	0	0	-0.1
Span Ref Cyl	9.934	8.87	46.4	241.1	45.07	9.934	8.87	236.9	10.44
Span Cal	9.944	8.904	46.047	241.05	45.71	9.968	8.825	238.37	10.422
Span Avg	9.919	8.88	42.678	242.09	43.292	10.236	8.916	224.03	10.189
Span Bias%	0.1	0.1	3.7	0.2	2.7	1.2	0.5	2.9	0.8
Span Drift%	-0.2	-0.2	0.2	-0.2	1	0.4	-0.1	-1.3	-0.1
Ini Zero Avg	0.034	0.039	0.485	-0.19	-2.061	0.313	-0.03	-4.22	-0.071
Ini Span Avg	9.954	8.922	42.492	243.25	42.403	10.143	8.927	230.38	10.209
Run Avg	11.512	8.207	-0.094	71.14	11.594	11.338	8.986	19.36	0.121
Co	0.034	0.043	0.49	-0.14	-2.061	0.365	-0.03	-4.31	-0.079
Cm	9.936	8.901	42.59	242.67	42.848	10.189	8.922	227.2	10.199
Correct Avg	11.515	8.175	-0.638	70.780	13.704	11.095	8.933	24.220	0.203

Test Run 9 STRATA Version 3.2

	O2-S	CO2-S	SO2-S	NOx-S	CO-S	O2-In	CO2-In	SO2-In	THC-S
	%	%	ppm	ppm	ppm	%	%	ppm	ppm
Begin calculating run averages									
08-13-2009 13:10:04	10.497	9.139	0.479	90.93	15.852	10.317	9.189	13.98	0.136
08-13-2009 13:11:03	11.291	8.404	0.249	96.71	10.636	11.609	9.031	11.73	0.122
08-13-2009 13:12:03	11.938	7.780	0.172	67.97	11.011	10.853	8.904	12.68	0.115
08-13-2009 13:13:03	10.275	9.347	0.204	83.64	16.823	9.417	9.260	19.97	0.091
08-13-2009 13:14:03	10.087	9.510	0.301	117.99	8.645	10.590	9.202	19.26	0.095
08-13-2009 13:15:03	11.538	8.083	0.027	90.25	5.101	12.206	8.799	13.97	0.104
08-13-2009 13:16:03	12.918	6.875	-0.102	49.04	7.697	12.725	7.799	11.50	0.129
08-13-2009 13:17:03	12.579	7.151	-0.107	41.69	14.770	11.715	8.563	14.88	0.106
08-13-2009 13:18:03	11.580	8.041	0.081	46.96	19.702	11.236	9.075	18.16	0.094
08-13-2009 13:19:03	11.587	8.099	-0.140	53.46	18.746	11.202	9.067	16.51	0.100
08-13-2009 13:20:03	11.062	8.572	-0.226	61.62	20.709	11.194	9.127	18.79	0.097
08-13-2009 13:21:03	11.740	7.943	-0.167	67.10	11.971	12.016	8.886	15.92	0.102
08-13-2009 13:22:03	11.993	7.678	-0.317	48.80	12.930	11.448	8.876	17.15	0.101
08-13-2009 13:23:03	11.217	8.381	-0.339	60.88	16.093	11.356	9.102	19.08	0.092
08-13-2009 13:24:03	11.749	7.925	-0.247	60.89	12.390	12.045	8.952	16.18	0.099
08-13-2009 13:25:03	12.264	7.482	-0.285	49.83	14.003	12.228	8.514	15.46	0.104
08-13-2009 13:26:03	11.996	7.691	-0.323	46.89	18.058	11.440	8.897	18.22	0.098
08-13-2009 13:27:03	11.433	8.211	-0.264	60.53	16.884	11.472	9.075	23.56	0.100
08-13-2009 13:28:03	11.558	8.123	-0.458	65.06	11.261	11.463	9.065	30.76	0.098
08-13-2009 13:29:03	11.569	8.074	-0.355	65.56	10.019	11.796	9.042	29.70	0.098
08-13-2009 13:30:03	11.857	7.857	-0.431	61.39	10.500	11.209	8.951	32.27	0.109
08-13-2009 13:31:03	10.698	8.932	-0.479	85.32	14.635	10.786	9.170	38.92	0.096
08-13-2009 13:32:03	11.424	8.227	-0.468	94.36	7.630	12.101	8.948	37.67	0.110
08-13-2009 13:33:04	12.583	7.203	-0.511	72.34	7.230	12.590	8.174	38.32	0.127
Run Averages	O2-S	CO2-S	SO2-S	NOx-S	CO-S	O2-In	CO2-In	SO2-In	THC-S
	%	%	ppm	ppm	ppm	%	%	ppm	ppm
08-13-2009 13:33:04	11.559	8.114	-0.154	68.30	13.058	11.458	8.903	21.03	0.105

Operator: Bill Harris
Plant Name: Huntington RRF
Location: Unit 1 Inlet and Outlet
Test Run 9 End

Final System Bias Check for Run 9 . STRATA Version 3.2

Operator:	Bill Harris
Plant Name:	Huntington RRF
Location:	Unit 1 Inlet and Outlet

Reference Cylinder Numbers

	Zero	Span
O2-S		XC033526B
CO2-S		XC033526B
SO2-S		CC41281
NOx-S		CC21496
CO-S		SG9113307BAL
O2-In		XC033526B
CO2-In		XC033526B
SO2-In		CC129649
THC-S		XC011445B

Date/Time	8/13/2009	13:42:48 PASSED							
Analyte	O2-S	CO2-S	SO2-S	NOx-S	CO-S	O2-In	CO2-In	SO2-In	THC-S
Units	%	%	ppm	ppm	ppm	%	%	ppm	ppm
Zero Ref Cyl	0	0	0	0	0	0	0	0	0
Zero Cal	0.034	0.029	0.023	0.31	-0.064	0.007	-0.032	0.48	0.034
Zero Avg	0.038	0.052	0.3	-0.2	-1.76	0.339	-0.03	-3.62	-0.091
Zero Bias%	0	0.1	0.3	0.1	1.9	1.5	0	0.8	0.4
Zero Drift%	0	0	-0.2	0	0.3	-0.4	0	0.2	0
Span Ref Cyl	9.934	8.87	46.4	241.1	45.07	9.934	8.87	236.9	10.44
Span Cal	9.944	8.904	46.047	241.05	45.71	9.968	8.825	238.37	10.422
Span Avg	9.971	8.96	43.185	241.41	43.206	10.186	8.925	231.45	10.196
Span Bias%	0.1	0.3	3.1	0.1	2.8	1	0.6	1.4	0.8
Span Drift%	0.2	0.4	0.6	-0.1	-0.1	-0.2	0	1.5	0
Ini Zero Avg	0.034	0.048	0.485	-0.1	-2.061	0.417	-0.03	-4.4	-0.087
Ini Span Avg	9.919	8.88	42.678	242.09	43.292	10.236	8.916	224.03	10.189
Run Avg	11.559	8.114	-0.154	68.3	13.058	11.458	8.903	21.03	0.105
Co	0.036	0.05	0.39	-0.15	-1.91	0.378	-0.03	-4.01	-0.089
Cm	9.945	8.92	42.93	241.75	43.249	10.211	8.921	227.74	10.193
Correct Avg	11.552	8.064	-0.596	68.220	14.938	11.194	8.852	25.600	0.197

Test Run 10 STRATA Version 3.2

	O2-S	CO2-S	SO2-S	NOx-S	CO-S	O2-In	CO2-In	SO2-In
	%	%	ppm	ppm	ppm	%	%	ppm
Begin calculating run averages								
08-13-2009 13:45:51	10.918	8.668	0.172	84.85	14.851	10.461	9.136	25.45
08-13-2009 13:46:51	10.825	8.837	-0.070	72.38	17.608	10.701	9.139	23.80
08-13-2009 13:47:51	11.167	8.538	-0.097	63.79	12.994	10.737	9.105	23.29
08-13-2009 13:48:51	10.742	8.875	-0.210	67.44	13.678	10.818	9.151	24.66
08-13-2009 13:49:51	11.447	8.246	-0.220	71.35	11.401	11.607	9.006	19.92
08-13-2009 13:50:51	11.625	8.031	-0.199	55.55	11.232	11.057	9.066	23.49
08-13-2009 13:51:51	10.931	8.662	-0.258	69.24	11.602	10.498	9.156	27.47
08-13-2009 13:52:51	10.935	8.701	-0.285	92.61	10.552	11.300	9.112	23.29
08-13-2009 13:53:51	11.927	7.766	-0.285	71.85	7.972	11.939	8.726	19.98
08-13-2009 13:54:51	11.840	7.799	-0.490	55.90	12.321	11.450	9.008	23.07
08-13-2009 13:55:51	11.510	8.122	-0.382	66.81	18.658	11.552	9.073	20.94
08-13-2009 13:56:51	11.878	7.834	-0.296	73.21	12.311	12.069	8.833	18.58
08-13-2009 13:57:51	12.195	7.548	-0.366	65.08	13.256	11.958	8.639	19.67
08-13-2009 13:58:51	11.855	7.775	-0.485	63.40	17.733	11.536	9.050	23.74
08-13-2009 13:59:51	11.768	7.899	-0.608	71.18	20.197	11.773	8.937	21.93
08-13-2009 14:00:51	11.467	8.223	-0.468	76.45	26.845	11.360	9.105	24.29
08-13-2009 14:01:51	11.808	7.965	-0.608	88.43	20.461	11.850	8.975	23.27
08-13-2009 14:02:51	11.802	7.909	-0.474	84.67	14.053	11.765	9.047	26.35
08-13-2009 14:03:51	11.696	8.016	-0.479	92.14	13.744	11.343	9.050	29.83
08-13-2009 14:04:51	11.506	8.201	-0.485	91.79	13.230	11.572	9.068	29.93
08-13-2009 14:05:51	11.828	7.895	-0.501	83.20	8.558	12.000	8.917	28.67
08-13-2009 14:06:51	11.959	7.765	-0.517	63.45	9.113	11.360	8.929	28.61
08-13-2009 14:07:51	11.567	8.114	-0.549	80.52	11.901	11.996	8.996	23.75
08-13-2009 14:08:50	12.326	7.476	-0.643	66.40	8.036	11.960	8.566	21.94
Run Averages	O2-S	CO2-S	SO2-S	NOx-S	CO-S	O2-In	CO2-In	SO2-In
	%	%	ppm	ppm	ppm	%	%	ppm
08-13-2009 14:08:50	11.563	8.120	-0.366	73.83	13.851	11.443	8.992	24.00

Operator: Bill Harris
Plant Name; Huntington RRF
Location: Unit 1 Inlet and Outlet
Test Run 10 End

Final System Bias Check for Run 10 . STRATA Version 3.2

Operator:		Bill Harris
Plant Name:		Huntington RRF
Location:		Unit 1 Inlet and Outlet
	Reference Cylinder Numbers	
	Zero	Span
O2-S		XC033526B
CO2-S		XC033526B
SO2-S		CC41281
NOx-S		CC21496
CO-S		SG9113307BAL
O2-In		XC033526B
CO2-In		XC033526B
SO2-In		CC129649

Date/Time	8/13/2009	14:17:12 PASSED						
Analyte	O2-S	CO2-S	SO2-S	NOx-S	CO-S	O2-In	CO2-In	SO2-In
Units	%	%	ppm	ppm	ppm	%	%	ppm
Zero Ref Cyl	0	0	0	0	0	0	0	0
Zero Cal	0.034	0.029	0.023	0.31	-0.064	0.007	-0.032	0.48
Zero Avg	0.225	0.06	0.115	-0.07	-1.753	0.423	-0.029	-3.47
Zero Bias%	0.9	0.2	0.1	0.1	1.9	1.9	0	0.8
Zero Drift%	0.9	0	-0.2	0	0	0.4	0	0
Span Ref Cyl	9.934	8.87	46.4	241.1	45.07	9.934	8.87	236.9
Span Cal	9.944	8.904	46.047	241.05	45.71	9.968	8.825	238.37
Span Avg	10.059	8.861	44.432	241	42.111	10.216	8.937	229.94
Span Bias%	0.5	0.2	1.8	0	4	1.1	0.6	1.7
Span Drift%	0.4	-0.6	1.4	-0.1	-1.2	0.1	0.1	-0.3
Ini Zero Avg	0.038	0.052	0.3	-0.2	-1.76	0.339	-0.03	-3.62
Ini Span Avg	9.971	8.96	43.185	241.41	43.206	10.186	8.925	231.45
Run Avg	11.563	8.12	-0.366	73.83	13.851	11.443	8.992	24
Co	0.131	0.056	0.21	-0.14	-1.757	0.381	-0.029	-3.55
Cm	10.015	8.911	43.81	241.21	42.658	10.201	8.931	230.69
Correct Avg	11.490	8.078	-0.610	73.900	15.838	11.190	8.930	27.860

Calibration Error Test at Run 1 . STRATA Version 3.2

Operator:	Bill Harris
Plant Name:	Huntington RRF
Location:	Unit 2 Inlet and Outlet

Reference Cylinder Numbers

	Zero	Low-range	Mid-range	High-range
O2-S			XC033526B	SG895387ALB
CO2-S			XC033526B	SG895387ALB
SO2-S			CC41281	CC61542
NOx-S		FF837	CC21496	FF747
CO-S			SG9113307BAL	FF43261
O2-In			XC033526B	SG895387ALB
CO2-In			XC033526B	SG895387ALB
SO2-In			CC129649	XC022664B
THC-S		XC011445B	FF37711	XF003030B

Date/Time	8/12/2009	7:56:43	PASSED						
Analyte	O2-S	CO2-S	SO2-S	NOx-S	CO-S	O2-In	CO2-In	SO2-In	THC-S
Units	%	%	ppm	ppm	ppm	%	%	ppm	ppm
Zero Ref Cyl	0	0	0	0	0	0	0	0	0
Zero Avg	0.012	0.01	0.161	0.45	-0.027	0.003	-0.038	0.69	-0.01
Zero Error%	0.1	0.1	0.2	0.1	0	0	0.2	0.1	0
Low Ref Cyl									10.44
Low Avg									10.408
Low Error%									0.1
Mid Ref Cyl	9.934	8.87	46.4	241.1	45.07	9.934	8.87	236.9	15.34
Mid Avg	9.982	8.91	46.463	241.79	45.399	9.951	8.852	237.33	15.499
Mid Error%	0.2	0.2	0.1	0.1	0.4	0.1	0.1	0.1	0.5
High Ref Cyl	21.9	17.79	91.63	482.4	89.29	21.9	17.79	490.7	26.15
High Avg	22.022	17.769	92.578	487.67	89.068	22.004	18.099	484.13	26.573
High Error%	0.6	0.1	1	1.1	0.2	0.5	1.7	1.3	1.4

Initial System Bias Check for Run 1 . STRATA Version 3.2

Operator:	Bill Harris
Plant Name:	Huntington RRF
Location:	Unit 2 Inlet and Outlet

Reference Cylinder Numbers

	Zero	Span
O2-S		XC033526B
CO2-S		XC033526B
SO2-S		CC41281
NOx-S		CC21496
CO-S		SG9113307BAL
O2-In		XC033526B
CO2-In		XC033526B
SO2-In		CC129649
THC-S		XC011445B

Date/Time	8/12/2009	8:24:14 PASSED							
Analyte	O2-S	CO2-S	SO2-S	NOx-S	CO-S	O2-In	CO2-In	SO2-In	THC-S
Units	%	%	ppm	ppm	ppm	%	%	ppm	ppm
Zero Ref Cyl	0	0	0	0	0	0	0	0	0
Zero Cal	0.012	0.01	0.161	0.45	-0.027	0.003	-0.038	0.69	-0.01
Zero Avg	0.04	0.016	0.485	0.27	-0.195	0.005	-0.037	0.33	0.015
Zero Bias%	0.1	0	0.3	0	0.2	0	0	0.1	0.1
Zero Drift%									
Span Ref Cyl	9.934	8.87	46.4	241.1	45.07	9.934	8.87	236.9	10.44
Span Cal	9.982	8.91	46.463	241.79	45.399	9.951	8.852	237.33	10.408
Span Avg	9.931	8.91	45.539	239.31	44.4	9.877	8.993	220.04	10.397
Span Bias%	0.2	0	-0.9	0.5	1.1	0.3	0.8	3.5	0
Span Drift%									

Test Run 1 STRATA Version 3.2

	O2-S	CO2-S	SO2-S	NOx-S	CO-S	O2-In	CO2-In	SO2-In	THC-S
	%	%	ppm	ppm	ppm	%	%	ppm	ppm
Begin calculating run averages									
08-12-2009 09:09:43	12.691	7.004	-0.135	57.46	14.898	11.507	7.406	29.72	0.080
08-12-2009 09:10:43	12.113	7.453	-0.107	54.95	21.368	10.793	8.125	34.40	0.280
08-12-2009 09:11:43	11.924	7.663	0.038	58.73	21.348	11.147	8.046	31.31	0.355
08-12-2009 09:12:43	12.088	7.523	-0.086	47.30	15.813	10.854	8.059	30.03	0.438
08-12-2009 09:13:43	12.045	7.575	-0.102	51.16	22.687	11.442	7.869	27.69	0.378
08-12-2009 09:14:43	12.300	7.363	-0.011	48.03	19.879	11.110	7.885	28.95	0.395
08-12-2009 09:15:43	11.939	7.675	-0.097	49.04	30.672	10.455	8.336	28.06	0.325
08-12-2009 09:16:43	11.503	8.055	-0.113	62.69	30.168	10.853	8.529	29.08	0.365
08-12-2009 09:17:43	12.053	7.604	-0.043	54.34	16.531	11.278	7.916	30.16	0.384
08-12-2009 09:18:43	12.103	7.531	-0.081	49.18	15.269	10.624	8.096	33.55	0.370
08-12-2009 09:19:43	11.559	7.950	-0.011	62.87	17.344	10.709	8.423	34.34	0.309
08-12-2009 09:20:43	11.772	7.836	-0.145	58.69	16.967	11.063	8.193	32.76	0.257
08-12-2009 09:21:43	12.315	7.357	-0.113	48.97	15.891	11.620	7.566	31.70	0.241
08-12-2009 09:22:43	12.326	7.320	0.000	43.77	21.079	11.316	7.870	34.32	0.141
08-12-2009 09:23:43	12.195	7.464	-0.070	48.81	21.522	10.850	7.980	35.45	0.155
08-12-2009 09:24:43	11.637	7.900	-0.118	60.56	23.293	10.729	8.412	39.64	0.239
08-12-2009 09:25:43	12.012	7.610	-0.140	58.29	19.555	11.573	7.785	39.15	0.301
08-12-2009 09:26:43	12.702	7.018	-0.081	43.52	12.017	11.772	7.283	39.51	0.318
08-12-2009 09:27:43	11.973	7.676	-0.118	44.70	15.983	9.334	8.606	57.90	0.222
08-12-2009 09:28:43	10.138	9.284	-0.145	96.54	20.930	9.553	9.717	60.55	0.230
08-12-2009 09:29:42	11.313	8.130	-0.123	90.84	10.887	11.523	8.035	43.94	0.235
08-12-2009 09:30:42	12.935	6.691	-0.161	39.66	8.260	12.670	6.733	36.30	0.203
08-12-2009 09:31:42	13.390	6.309	-0.134	31.79	8.127	11.665	6.884	46.59	0.123
08-12-2009 09:32:42	12.039	7.480	-0.113	43.52	15.560	10.525	8.193	57.87	0.151
Run Averages	O2-S	CO2-S	SO2-S	NOx-S	CO-S	O2-In	CO2-In	SO2-In	THC-S
	%	%	ppm	ppm	ppm	%	%	ppm	ppm
08-12-2009 09:32:42	12.045	7.560	-0.092	54.37	18.171	11.040	7.997	37.20	0.271

Operator: Bill Harris
Plant Name: Huntington RRF
Location: Unit 2 Inlet and Outlet
Test Run 1 End

Final System Bias Check for Run 1 . STRATA Version 3.2

Operator:	Bill Harris
Plant Name:	Huntington RRF
Location:	Unit 2 Inlet and Outlet

Reference Cylinder Numbers

	Zero	Span
O2-S		XC033526B
CO2-S		XC033526B
SO2-S		CC41281
NOx-S		CC21496
CO-S		SG9113307BAL
O2-In		XC033526B
CO2-In		XC033526B
SO2-In		CC129649
THC-S		XC011445B

Date/Time	8/12/2009	9:43:33 PASSED							
Analyte	O2-S	CO2-S	SO2-S	NOx-S	CO-S	O2-In	CO2-In	SO2-In	THC-S
Units	%	%	ppm	ppm	ppm	%	%	ppm	ppm
Zero Ref Cyl	0	0	0	0	0	0	0	0	0
Zero Cal	0.012	0.01	0.161	0.45	-0.027	0.003	-0.038	0.69	-0.01
Zero Avg	0.015	0.022	1.224	-0.36	-1.217	0.048	-0.042	3.69	0.088
Zero Bias%	0	0.1	1.2	0.2	1.3	0.2	0	0.6	0.3
Zero Drift%	-0.1	0	0.8	-0.1	-1.1	0.2	0	0.7	0.2
Span Ref Cyl	9.934	8.87	46.4	241.1	45.07	9.934	8.87	236.9	10.44
Span Cal	9.982	8.91	46.463	241.79	45.399	9.951	8.852	237.33	10.408
Span Avg	9.898	8.926	46.14	239.32	44.589	10.001	9.07	226.48	10.479
Span Bias%	0.4	0.1	0.4	0.5	0.9	0.2	1.2	2.2	0.2
Span Drift%	-0.2	0.1	0.7	0	0.2	0.6	0.4	1.3	0.3
Ini Zero Avg	0.04	0.016	0.485	0.27	-0.195	0.005	-0.037	0.33	0.015
Ini Span Avg	9.931	8.91	45.539	239.31	44.4	9.877	8.993	220.04	10.397
Run Avg	12.045	7.56	-0.092	54.37	18.171	11.04	7.997	37.2	0.271
Co	0.028	0.019	0.85	-0.04	-0.706	0.027	-0.04	2.01	0.051
Cm	9.914	8.918	45.84	239.31	44.494	9.939	9.032	223.26	10.438
Correct Avg	12.075	7.517	-0.976	54.810	18.823	11.037	7.859	37.680	0.220

Test Run 2 STRATA Version 3.2

	O2-S	CO2-S	SO2-S	NOx-S	CO-S	O2-In	CO2-In	SO2-In	THC-S
	%	%	ppm	ppm	ppm	%	%	ppm	ppm
Begin calculating run averages									
08-12-2009 09:46:34	12.511	7.065	1.756	46.39	31.411	11.026	7.561	48.89	0.197
08-12-2009 09:47:34	12.043	7.469	1.120	58.22	26.425	10.510	7.935	50.13	0.189
08-12-2009 09:48:34	11.694	7.761	0.932	76.52	19.995	10.658	8.169	50.93	0.139
08-12-2009 09:49:34	12.037	7.564	0.673	71.92	24.370	11.239	7.757	47.07	0.161
08-12-2009 09:50:34	12.269	7.399	0.571	59.06	25.727	10.847	7.801	45.48	0.170
08-12-2009 09:51:34	11.615	7.920	0.560	72.97	26.542	10.927	8.304	41.97	0.102
08-12-2009 09:52:34	12.168	7.511	0.226	68.97	23.771	11.371	7.647	38.68	0.041
08-12-2009 09:53:34	12.011	7.589	0.167	59.47	24.498	11.119	8.020	39.60	0.042
08-12-2009 09:54:34	12.279	7.400	0.161	58.61	26.416	11.372	7.589	37.14	0.095
08-12-2009 09:55:34	12.123	7.471	0.118	53.64	26.909	11.032	7.940	38.98	0.131
08-12-2009 09:56:34	12.048	7.589	-0.129	60.72	23.548	11.716	7.737	35.36	0.172
08-12-2009 09:57:34	12.783	6.978	0.064	49.07	17.204	11.752	7.181	33.86	0.145
08-12-2009 09:58:34	12.394	7.291	-0.108	47.43	29.496	11.139	7.786	37.61	0.150
08-12-2009 09:59:34	11.850	7.753	-0.177	60.30	27.133	10.862	8.220	39.32	0.151
08-12-2009 10:00:34	11.930	7.729	-0.167	70.68	18.101	11.492	7.919	39.48	0.148
08-12-2009 10:01:34	12.565	7.211	-0.064	53.34	20.138	11.815	7.354	40.84	0.152
08-12-2009 10:02:34	12.341	7.366	-0.215	46.22	29.738	10.669	7.967	44.73	0.099
08-12-2009 10:03:34	11.588	8.040	-0.129	69.05	28.048	11.110	8.303	42.01	0.072
08-12-2009 10:04:34	12.297	7.407	-0.210	54.96	16.480	11.964	7.486	38.26	0.001
08-12-2009 10:05:34	12.908	6.874	-0.102	37.02	18.039	11.935	7.124	40.36	0.015
08-12-2009 10:06:34	12.311	7.347	-0.183	46.77	28.841	10.830	7.975	47.31	0.006
08-12-2009 10:07:34	12.057	7.559	-0.221	72.57	22.850	11.854	7.612	43.94	0.060
08-12-2009 10:08:34	12.543	7.139	-0.215	54.00	13.274	11.033	7.630	46.61	0.348
08-12-2009 10:09:34	11.996	7.602	-0.307	68.44	18.821	11.582	7.815	43.51	0.412
Run Averages	O2-S	CO2-S	SO2-S	NOx-S	CO-S	O2-In	CO2-In	SO2-In	THC-S
	%	%	ppm	ppm	ppm	%	%	ppm	ppm
08-12-2009 10:09:34	12.182	7.460	0.172	59.01	23.657	11.244	7.785	42.17	0.133

Operator: Bill Harris
Plant Name: Huntington RRF
Location: Unit 2 Inlet and Outlet
Test Run 2 End

Final System Bias Check for Run 2 . STRATA Version 3.2

Operator:	Bill Harris
Plant Name:	Huntington RRF
Location:	Unit 2 Inlet and Outlet

Reference Cylinder Numbers

	Zero	Span
O2-S		XC033526B
CO2-S		XC033526B
SO2-S		CC41281
NOx-S		CC21496
CO-S		SG9113307BAL
O2-In		XC033526B
CO2-In		XC033526B
SO2-In		CC129649
THC-S		XC011445B

Date/Time 8/12/2009 10:18:50 PASSED

Analyte	O2-S	CO2-S	SO2-S	NOx-S	CO-S	O2-In	CO2-In	SO2-In	THC-S
Units	%	%	ppm	ppm	ppm	%	%	ppm	ppm
Zero Ref Cyl	0	0	0	0	0	0	0	0	0
Zero Cal	0.012	0.01	0.161	0.45	-0.027	0.003	-0.038	0.69	-0.01
Zero Avg	0.015	0.054	0.161	-0.32	-1.56	0.055	-0.037	2.39	0.499
Zero Bias%	0	0.2	0	0.2	1.7	0.2	0	0.3	1.7
Zero Drift%	0	0.2	-1.2	0	-0.4	0	0	-0.3	1.4
Span Ref Cyl	9.934	8.87	46.4	241.1	45.07	9.934	8.87	236.9	10.44
Span Cal	9.982	8.91	46.463	241.79	45.399	9.951	8.852	237.33	10.408
Span Avg	9.912	8.957	43.97	238.78	42.916	10.131	9.171	225.54	10.392
Span Bias%	0.3	0.3	2.7	0.6	2.8	0.8	1.8	2.4	0.1
Span Drift%	0.1	0.2	-2.4	-0.1	-1.9	0.6	0.6	-0.2	-0.3
Ini Zero Avg	0.015	0.022	1.224	-0.36	-1.217	0.048	-0.042	3.69	0.088
Ini Span Avg	9.898	8.926	46.14	239.32	44.589	10.001	9.07	226.48	10.479
Run Avg	12.182	7.46	0.172	59.01	23.657	11.244	7.785	42.17	0.133
Co	0.015	0.038	0.69	-0.34	-1.388	0.052	-0.04	3.04	0.293
Cm	9.905	8.941	45.06	239.05	43.752	10.066	9.121	226.01	10.436
Correct Avg	12.221	7.394	-0.544	59.780	25.007	11.102	7.576	41.570	-0.165

Test Run 3 STRATA Version 3.2

	O2-S	CO2-S	SO2-S	NOx-S	CO-S	O2-In	CO2-In	SO2-In	THC-S
	%	%	ppm	ppm	ppm	%	%	ppm	ppm
Begin calculating run averages									
08-12-2009 10:21:45	12.530	7.200	1.062	53.41	46.987	10.947	7.727	40.23	0.297
08-12-2009 10:22:45	12.046	7.667	0.441	63.49	53.215	11.466	7.991	37.04	0.385
08-12-2009 10:23:45	12.503	7.306	0.280	49.27	46.077	10.714	7.808	37.12	0.427
08-12-2009 10:24:45	12.019	7.718	-0.070	61.40	36.533	11.779	7.901	32.46	0.399
08-12-2009 10:25:45	13.141	6.783	-0.107	49.73	25.960	12.040	7.069	30.28	0.367
08-12-2009 10:26:45	12.391	7.457	-0.221	47.74	35.533	11.000	8.196	33.05	0.376
08-12-2009 10:27:45	12.282	7.548	-0.339	62.41	31.526	11.724	7.732	28.98	0.353
08-12-2009 10:28:45	12.549	7.256	-0.312	58.91	25.054	11.404	7.740	31.48	0.348
08-12-2009 10:29:45	12.351	7.456	-0.285	59.37	29.730	11.405	7.909	31.35	0.378
08-12-2009 10:30:45	12.276	7.506	-0.393	61.38	26.888	11.265	8.047	30.84	0.236
08-12-2009 10:31:45	12.256	7.546	-0.409	66.38	21.415	11.109	8.123	29.54	0.306
08-12-2009 10:32:45	12.081	7.682	-0.458	64.43	24.626	10.878	8.316	28.73	0.324
08-12-2009 10:33:45	11.796	7.923	-0.506	66.47	21.983	10.561	8.675	30.06	0.319
08-12-2009 10:34:45	11.972	7.815	-0.350	73.42	15.140	11.341	8.243	27.25	0.367
08-12-2009 10:35:45	12.683	7.173	-0.447	60.87	10.224	11.675	7.538	26.20	0.331
08-12-2009 10:36:45	12.215	7.531	-0.528	54.69	16.175	10.383	8.535	31.28	0.375
08-12-2009 10:37:45	12.035	7.661	-0.522	73.97	20.381	11.903	7.990	27.71	0.469
08-12-2009 10:38:45	13.437	6.440	-0.528	44.90	13.982	12.843	6.682	23.14	0.458
08-12-2009 10:39:45	13.526	6.368	-0.705	40.90	22.614	11.859	7.206	24.20	0.552
08-12-2009 10:40:45	12.854	6.954	-0.716	47.63	26.124	11.493	7.772	25.39	0.492
08-12-2009 10:41:45	12.423	7.348	-0.797	52.78	24.509	10.582	8.299	26.89	0.408
08-12-2009 10:42:45	12.126	7.623	-0.716	66.63	23.590	11.751	8.128	24.43	0.405
08-12-2009 10:43:45	13.356	6.573	-0.635	46.31	18.105	12.797	6.910	20.84	0.422
08-12-2009 10:44:45	13.624	6.338	-0.695	35.36	25.990	11.713	7.179	21.96	0.366
Run Averages	O2-S	CO2-S	SO2-S	NOx-S	CO-S	O2-In	CO2-In	SO2-In	THC-S
	%	%	ppm	ppm	ppm	%	%	ppm	ppm
08-12-2009 10:44:45	12.520	7.286	-0.331	56.74	26.779	11.443	7.821	29.19	0.382

Operator: Bill Harris
Plant Name: Huntington RRF
Location: Unit 2 Inlet and Outlet
Test Run 3 End

Final System Bias Check for Run 3 . STRATA Version 3.2

Operator: Bill Harris
Plant Name: Huntington RRF
Location: Unit 2 Inlet and Outlet

Reference Cylinder Numbers

	Zero	Span
O2-S		XC033526B
CO2-S		XC033526B
SO2-S		CC41281
NOx-S		CC21496
CO-S		SG9113307BAL
O2-In		XC033526B
CO2-In		XC033526B
SO2-In		CC129649
THC-S		XC011445B

Date/Time 8/12/2009 10:57:17 PASSED

Analyte	O2-S	CO2-S	SO2-S	NOx-S	CO-S	O2-In	CO2-In	SO2-In	THC-S
Units	%	%	ppm	ppm	ppm	%	%	ppm	ppm
Zero Ref Cyl	0	0	0	0	0	0	0	0	0
Zero Cal	0.012	0.01	0.161	0.45	-0.027	0.003	-0.038	0.69	-0.01
Zero Avg	0.639	0.035	0.808	-0.31	-0.757	0.063	-0.04	2.59	0.046
Zero Bias%	2.9	0.1	0.7	0.2	0.8	0.3	0	0.4	0.2
Zero Drift%	2.8	-0.1	0.7	0	0.9	0	0	0	-1.5
Span Ref Cyl	9.934	8.87	46.4	241.1	45.07	9.934	8.87	236.9	10.44
Span Cal	9.982	8.91	46.463	241.79	45.399	9.951	8.852	237.33	10.408
Span Avg	10.19	8.642	42.908	239.25	42.803	10.128	9.012	229	10.421
Span Bias%	0.9	1.5	3.9	0.5	2.9	0.8	0.9	1.7	0
Span Drift%	1.3	-1.8	-1.2	0.1	-0.1	0	-0.9	0.7	0.1
Ini Zero Avg	0.015	0.054	0.161	-0.32	-1.56	0.055	-0.037	2.39	0.499
Ini Span Avg	9.912	8.957	43.97	238.78	42.916	10.131	9.171	225.54	10.392
Run Avg	12.52	7.286	-0.331	56.74	26.779	11.443	7.821	29.19	0.382
Co	0.327	0.044	0.48	-0.32	-1.158	0.059	-0.038	2.49	0.272
Cm	10.051	8.799	43.44	239.02	42.86	10.129	9.092	227.27	10.407
Correct Avg	12.456	7.337	-0.881	57.480	28.605	11.229	7.636	28.150	0.113

Test Run 4 STRATA Version 3.2

	O2-S	CO2-S	SO2-S	NOx-S	CO-S	O2-In	CO2-In	SO2-In	THC-S
	%	%	ppm	ppm	ppm	%	%	ppm	ppm
Begin calculating run averages									
08-12-2009 11:00:27	12.600	7.203	1.036	51.50	20.765	11.163	7.532	22.63	0.227
08-12-2009 11:01:27	11.916	7.765	0.458	58.41	18.174	10.329	8.352	25.58	0.195
08-12-2009 11:02:27	11.945	7.726	0.145	76.37	19.642	10.986	8.399	24.50	0.122
08-12-2009 11:03:27	12.717	7.121	0.091	55.49	11.029	11.994	7.439	21.71	0.080
08-12-2009 11:04:27	13.115	6.793	-0.199	40.42	9.961	12.301	6.960	21.63	0.127
08-12-2009 11:05:27	12.786	7.035	-0.220	36.68	15.086	11.544	7.552	24.12	0.119
08-12-2009 11:06:27	12.277	7.466	-0.307	50.51	18.607	11.418	7.912	24.35	0.023
08-12-2009 11:07:27	12.476	7.349	-0.522	64.59	13.573	11.729	7.549	22.58	0.197
08-12-2009 11:08:27	12.598	7.211	-0.549	61.11	13.772	11.779	7.499	22.53	0.513
08-12-2009 11:09:27	12.530	7.214	-0.700	59.85	16.626	11.628	7.634	23.39	0.748
08-12-2009 11:10:27	12.505	7.291	-0.716	58.74	17.381	11.760	7.576	23.69	0.794
08-12-2009 11:11:27	12.656	7.218	-0.700	50.94	18.859	11.952	7.463	22.62	0.797
08-12-2009 11:12:27	12.732	7.138	-0.151	44.19	19.967	11.675	7.467	22.42	0.894
08-12-2009 11:13:27	12.499	7.332	0.221	44.32	19.899	11.875	7.625	23.08	0.881
08-12-2009 11:14:27	12.613	7.266	-0.070	44.17	21.807	11.337	7.652	23.91	0.730
08-12-2009 11:15:27	11.938	7.813	0.194	50.42	27.885	10.941	8.264	25.10	0.547
08-12-2009 11:16:27	11.843	7.917	-0.005	52.72	24.498	11.020	8.220	23.77	0.584
08-12-2009 11:17:27	11.777	7.943	-0.068	54.89	23.728	11.269	8.309	23.13	0.601
08-12-2009 11:18:27	12.550	7.322	-0.070	45.13	20.657	12.145	7.362	19.84	0.610
08-12-2009 11:19:27	12.715	7.168	-0.064	35.77	25.207	11.640	7.579	19.50	0.614
08-12-2009 11:20:27	12.336	7.493	-0.038	45.53	35.758	11.160	7.933	18.91	0.531
08-12-2009 11:21:27	11.938	7.827	-0.161	55.97	35.312	11.097	8.202	19.03	0.486
08-12-2009 11:22:27	12.003	7.836	-0.016	57.73	33.582	10.737	8.115	18.62	0.525
08-12-2009 11:23:27	11.390	8.419	-0.113	61.15	38.754	11.075	8.764	20.17	0.522
Run Averages	O2-S	CO2-S	SO2-S	NOx-S	CO-S	O2-In	CO2-In	SO2-In	THC-S
	%	%	ppm	ppm	ppm	%	%	ppm	ppm
08-12-2009 11:23:27	12.353	7.452	-0.105	52.36	21.687	11.440	7.806	22.37	0.478

Operator: Bill Harris
Plant Name: Huntington RRF
Location: Unit 2 Inlet and Outlet
Test Run 4 End

Final System Bias Check for Run 4 . STRATA Version 3.2

Operator:		Bill Harris
Plant Name:		Huntington RRF
Location:		Unit 2 Inlet and Outlet
	Reference Cylinder Numbers	
	Zero	Span
O2-S		XC033526B
CO2-S		XC033526B
SO2-S		CC41281
NOx-S		CC21496
CO-S		SG9113307BAL
O2-In		XC033526B
CO2-In		XC033526B
SO2-In		CC129649
THC-S		XC011445B

Date/Time	8/12/2009	11:35:14 PASSED							
Analyte	O2-S	CO2-S	SO2-S	NOx-S	CO-S	O2-In	CO2-In	SO2-In	THC-S
Units	%	%	ppm	ppm	ppm	%	%	ppm	ppm
Zero Ref Cyl	0	0	0	0	0	0	0	0	0
Zero Cal	0.012	0.01	0.161	0.45	-0.027	0.003	-0.038	0.69	-0.01
Zero Avg	0.031	0.203	1.131	4.8	0.633	0.062	-0.036	2.23	0.032
Zero Bias%	0.1	1.1	1.1	0.9	0.7	0.3	0	0.3	0.1
Zero Drift%	-2.8	0.9	0.4	1.1	1.6	0	0	-0.1	0
Span Ref Cyl	9.934	8.87	46.4	241.1	45.07	9.934	8.87	236.9	10.44
Span Cal	9.982	8.91	46.463	241.79	45.399	9.951	8.852	237.33	10.408
Span Avg	9.889	8.927	42.585	238.69	43.315	10.126	9.089	222.61	10.393
Span Bias%	0.4	0.1	4.2	0.6	2.3	0.8	1.3	3	0
Span Drift%	-1.4	1.6	-0.4	-0.1	0.6	0	0.4	-1.3	-0.1
Ini Zero Avg	0.639	0.035	0.808	-0.31	-0.757	0.063	-0.04	2.59	0.046
Ini Span Avg	10.19	8.642	42.908	239.25	42.803	10.128	9.012	229	10.421
Run Avg	12.353	7.452	-0.105	52.36	21.687	11.44	7.806	22.37	0.478
Co	0.335	0.119	0.97	2.24	-0.062	0.062	-0.038	2.41	0.039
Cm	10.039	8.784	42.75	238.97	43.059	10.127	9.05	225.81	10.407
Correct Avg	12.303	7.506	-1.193	51.040	22.732	11.230	7.656	21.160	0.441

Test Run 5 STRATA Version 3.2

	O2-S	CO2-S	SO2-S	NOx-S	CO-S	O2-In	CO2-In	SO2-In	THC-S
	%	%	ppm	ppm	ppm	%	%	ppm	ppm
Begin calculating run averages									
08-12-2009 11:39:20	11.186	8.420	0.829	72.24	31.422	10.287	8.728	28.99	-0.152
08-12-2009 11:40:20	11.542	8.116	0.533	82.28	15.793	10.361	8.311	27.47	-0.163
08-12-2009 11:41:20	11.593	8.007	0.511	69.69	8.837	11.102	8.179	28.31	-0.247
08-12-2009 11:42:20	12.304	7.419	0.404	48.47	10.979	11.853	7.484	26.55	0.153
08-12-2009 11:43:20	12.925	6.893	0.188	36.11	12.218	12.070	7.006	27.34	0.662
08-12-2009 11:44:20	12.490	7.234	0.301	38.56	15.968	10.991	7.814	33.11	0.626
08-12-2009 11:45:20	11.903	7.750	0.177	62.09	21.932	11.348	8.005	32.46	0.684
08-12-2009 11:46:20	12.512	7.259	0.140	63.16	14.626	12.131	7.332	29.34	0.656
08-12-2009 11:47:20	12.700	7.088	-0.086	43.24	13.723	11.053	7.617	31.97	0.573
08-12-2009 11:48:20	11.827	7.805	-0.070	61.03	20.786	11.283	8.102	33.09	0.575
08-12-2009 11:49:20	12.422	7.345	-0.027	61.59	13.362	11.942	7.408	29.70	0.613
08-12-2009 11:50:20	12.459	7.283	-0.156	46.25	12.613	10.997	7.806	32.02	0.567
08-12-2009 11:51:20	12.042	7.633	0.027	65.80	14.933	11.755	7.781	27.60	0.505
08-12-2009 11:52:20	12.777	7.028	-0.032	53.96	8.945	11.873	7.195	26.35	0.452
08-12-2009 11:53:20	12.538	7.184	-0.107	48.27	10.843	12.106	7.476	27.50	0.536
08-12-2009 11:54:20	13.145	6.692	-0.172	48.17	10.825	12.456	6.835	26.85	0.536
08-12-2009 11:55:20	13.069	6.709	-0.102	44.23	10.993	12.025	7.082	29.51	0.667
08-12-2009 11:56:20	12.702	7.013	-0.167	51.58	14.987	11.967	7.380	28.19	0.705
08-12-2009 11:57:20	12.540	7.154	-0.291	54.27	17.092	11.874	7.186	26.02	0.677
08-12-2009 11:58:20	12.356	7.328	-0.291	65.78	17.466	12.528	7.119	23.90	0.544
08-12-2009 11:59:20	12.200	7.464	-0.177	73.93	19.700	12.295	6.889	22.04	0.531
08-12-2009 12:00:20	11.510	8.123	-0.183	69.95	26.848	11.381	7.672	26.52	0.551
08-12-2009 12:01:20	11.260	8.386	-0.258	91.05	16.461	12.401	7.385	23.26	0.536
08-12-2009 12:02:20	12.367	7.411	-0.296	67.06	11.276	13.209	6.521	19.62	0.510
Run Averages	O2-S	CO2-S	SO2-S	NOx-S	CO-S	O2-In	CO2-In	SO2-In	THC-S
	%	%	ppm	ppm	ppm	%	%	ppm	ppm
08-12-2009 12:02:20	12.265	7.449	0.030	59.12	15.537	11.719	7.514	27.82	0.470

Operator: Bill Harris
Plant Name: Huntington RRF
Location: Unit 2 Inlet and Outlet
Test Run 5 End

Final System Bias Check for Run 5 . STRATA Version 3.2

Operator:	Bill Harris
Plant Name:	Huntington RRF
Location:	Unit 2 Inlet and Outlet

Reference Cylinder Numbers

	Zero	Span
O2-S		XC033526B
CO2-S		XC033526B
SO2-S		CC41281
NOx-S		CC21496
CO-S		SG9113307BAL
O2-In		XC033526B
CO2-In		XC033526B
SO2-In		CC129649
THC-S		XC011445B

Date/Time	8/12/2009	12:10:44 PASSED							
Analyte	O2-S	CO2-S	SO2-S	NOx-S	CO-S	O2-In	CO2-In	SO2-In	THC-S
Units	%	%	ppm	ppm	ppm	%	%	ppm	ppm
Zero Ref Cyl	0	0	0	0	0	0	0	0	0
Zero Cal	0.012	0.01	0.161	0.45	-0.027	0.003	-0.038	0.69	-0.01
Zero Avg	0.038	0.035	1.177	-0.17	-0.716	0.319	-0.035	1.58	0.103
Zero Bias%	0.1	0.1	1.1	0.1	0.8	1.4	0	0.2	0.4
Zero Drift%	0	-0.9	0.1	-1	-1.5	1.2	0	-0.1	0.2
Span Ref Cyl	9.934	8.87	46.4	241.1	45.07	9.934	8.87	236.9	10.44
Span Cal	9.982	8.91	46.463	241.79	45.399	9.951	8.852	237.33	10.408
Span Avg	9.781	8.842	43.555	237.69	42.501	10.329	8.709	220.77	10.465
Span Bias%	0.9	0.4	3.2	0.8	3.2	1.7	0.8	3.4	0.2
Span Drift%	-0.5	-0.5	1.1	-0.2	-0.9	0.9	-2.1	-0.4	0.2
Ini Zero Avg	0.031	0.203	1.131	4.8	0.633	0.062	-0.036	2.23	0.032
Ini Span Avg	9.889	8.927	42.585	238.69	43.315	10.126	9.089	222.61	10.393
Run Avg	12.265	7.449	0.03	59.12	15.537	11.719	7.514	27.82	0.47
Co	0.034	0.119	1.15	2.32	-0.042	0.19	-0.036	1.91	0.068
Cm	9.835	8.885	43.07	238.19	42.908	10.227	8.899	221.69	10.429
Correct Avg	12.397	7.417	-1.244	58.070	16.348	11.411	7.495	27.930	0.406

Test Run 6 STRATA Version 3.2

	O2-S	CO2-S	SO2-S	NOx-S	CO-S	O2-In	CO2-In	SO2-In	THC-S
	%	%	ppm	ppm	ppm	%	%	ppm	ppm
Begin calculating run averages									
08-12-2009 12:13:22	11.935	7.787	1.687	63.31	10.771	11.711	7.287	30.93	0.292
08-12-2009 12:14:22	11.776	7.951	1.029	74.43	11.990	12.415	7.120	29.90	0.265
08-12-2009 12:15:22	12.556	7.292	0.722	54.03	9.595	12.527	6.559	34.38	0.287
08-12-2009 12:16:22	12.325	7.488	0.538	48.15	13.303	12.752	6.836	38.06	0.317
08-12-2009 12:17:22	12.764	7.149	0.463	47.28	14.804	12.604	6.542	33.10	0.332
08-12-2009 12:18:22	12.132	7.668	0.064	50.53	18.832	12.509	7.083	33.77	0.267
08-12-2009 12:19:21	12.484	7.424	0.112	56.80	16.947	12.759	6.641	30.39	0.275
08-12-2009 12:20:21	12.334	7.491	-0.140	56.43	12.825	12.632	6.930	33.63	0.195
08-12-2009 12:21:21	12.557	7.350	-0.011	54.82	16.313	12.875	6.620	29.67	0.211
08-12-2009 12:22:21	12.504	7.322	-0.118	51.18	20.348	12.735	6.744	30.43	0.206
08-12-2009 12:23:21	12.432	7.432	-0.161	51.25	24.556	12.705	6.710	28.73	0.283
08-12-2009 12:24:21	12.217	7.540	-0.129	52.07	26.779	12.452	6.935	28.11	0.211
08-12-2009 12:25:21	11.762	7.931	-0.086	53.12	23.423	11.512	7.453	31.31	0.179
08-12-2009 12:26:21	11.199	8.451	-0.253	73.01	20.984	11.917	7.566	30.72	0.224
08-12-2009 12:27:21	11.429	8.198	-0.323	65.70	20.289	11.849	7.472	30.15	0.156
08-12-2009 12:28:21	11.661	8.002	-0.215	75.52	12.106	12.487	7.127	30.14	0.152
08-12-2009 12:29:21	12.284	7.464	-0.382	62.39	11.198	12.735	6.690	30.55	0.182
08-12-2009 12:30:21	12.342	7.352	-0.296	51.04	12.644	12.767	6.756	31.84	0.203
08-12-2009 12:31:21	12.552	7.214	-0.377	48.61	14.116	12.699	6.546	30.86	0.309
08-12-2009 12:32:21	12.073	7.566	-0.253	52.04	13.269	12.384	7.029	33.78	0.274
08-12-2009 12:33:21	12.232	7.457	-0.312	53.29	14.281	12.844	6.677	30.60	0.270
08-12-2009 12:34:21	12.323	7.332	-0.344	41.79	12.925	12.493	6.795	39.96	0.249
08-12-2009 12:35:21	12.459	7.237	-0.458	50.16	14.835	13.354	6.416	34.48	0.256
08-12-2009 12:36:21	12.958	6.796	-0.371	37.01	13.239	12.902	6.308	38.18	0.197
Run Averages	O2-S	CO2-S	SO2-S	NOx-S	CO-S	O2-In	CO2-In	SO2-In	THC-S
	%	%	ppm	ppm	ppm	%	%	ppm	ppm
08-12-2009 12:36:22	12.220	7.537	0.017	55.17	15.845	12.525	6.869	32.24	0.241

Operator: Bill Harris
Plant Name: Huntington RRF
Location: Unit 2 Inlet and Outlet
Test Run 6 End

Final System Bias Check for Run 6 . STRATA Version 3.2

Operator:		Bill Harris
Plant Name:		Huntington RRF
Location:		Unit 2 Inlet and Outlet
	Reference Cylinder Numbers	
	Zero	Span
O2-S		XC033526B
CO2-S		XC033526B
SO2-S		CC41281
NOx-S		CC21496
CO-S		SG9113307BAL
O2-In		XC033526B
CO2-In		XC033526B
SO2-In		CC129649
THC-S		XC011445B

Date/Time	8/12/2009	12:44:44 PASSED							
Analyte	O2-S	CO2-S	SO2-S	NOx-S	CO-S	O2-In	CO2-In	SO2-In	THC-S
Units	%	%	ppm	ppm	ppm	%	%	ppm	ppm
Zero Ref Cyl	0	0	0	0	0	0	0	0	0
Zero Cal	0.012	0.01	0.161	0.45	-0.027	0.003	-0.038	0.69	-0.01
Zero Avg	0.037	0.048	0.946	-0.07	-0.662	0.344	-0.035	1.71	0.207
Zero Bias%	0.1	0.2	0.9	0.1	0.7	1.6	0	0.2	0.7
Zero Drift%	0	0.1	-0.3	0	0.1	0.1	0	0	0.3
Span Ref Cyl	9.934	8.87	46.4	241.1	45.07	9.934	8.87	236.9	10.44
Span Cal	9.982	8.91	46.463	241.79	45.399	9.951	8.852	237.33	10.408
Span Avg	9.731	8.817	43.739	240.69	41.83	10.389	8.626	218.47	10.469
Span Bias%	1.1	0.5	3	0.2	4	2	1.3	3.8	0.2
Span Drift%	-0.2	-0.1	0.2	0.6	-0.8	0.3	-0.5	-0.5	0
Ini Zero Avg	0.038	0.035	1.177	-0.17	-0.716	0.319	-0.035	1.58	0.103
Ini Span Avg	9.781	8.842	43.555	237.69	42.501	10.329	8.709	220.77	10.465
Run Avg	12.22	7.537	0.017	55.17	15.845	12.525	6.869	32.24	0.241
Co	0.037	0.041	1.06	-0.12	-0.689	0.332	-0.035	1.65	0.155
Cm	9.756	8.83	43.65	239.19	42.165	10.359	8.668	219.62	10.467
Correct Avg	12.453	7.566	-1.138	55.700	17.388	12.080	7.036	33.250	0.087

Test Run 7 STRATA Version 3.2

	O2-S	CO2-S	SO2-S	NOx-S	CO-S	O2-In	CO2-In	SO2-In	THC-S
	%	%	ppm	ppm	ppm	%	%	ppm	ppm
Begin calculating run averages									
08-12-2009 13:32:12	11.930	7.810	-0.394	52.23	18.719	10.224	8.708	16.26	0.297
08-12-2009 13:33:12	10.981	8.713	-0.414	76.82	17.378	10.822	9.064	21.51	0.339
08-12-2009 13:34:12	11.611	8.197	-0.625	81.13	15.188	11.234	8.397	21.34	0.372
08-12-2009 13:35:12	11.777	8.009	-0.528	68.69	16.500	11.008	8.503	22.47	0.320
08-12-2009 13:36:12	11.623	8.199	-0.689	65.24	27.076	11.154	8.611	23.49	0.407
08-12-2009 13:37:12	11.969	7.926	-0.619	56.82	21.624	11.873	8.038	24.69	0.358
08-12-2009 13:38:12	12.485	7.502	-0.662	50.97	22.941	11.913	7.691	28.14	0.321
08-12-2009 13:39:12	12.308	7.594	-0.700	50.01	28.861	11.290	8.156	32.20	0.276
08-12-2009 13:40:12	11.686	8.173	-0.738	59.86	36.218	10.970	8.653	35.69	0.244
08-12-2009 13:41:12	11.655	8.225	-0.716	67.91	29.809	11.496	8.308	38.22	0.236
08-12-2009 13:42:12	12.025	7.856	-0.722	61.46	23.353	11.765	7.994	41.50	0.271
08-12-2009 13:43:12	12.270	7.603	-0.840	52.78	21.295	11.455	7.881	42.33	0.281
08-12-2009 13:44:12	11.862	7.940	-0.872	62.23	25.983	11.347	8.328	44.82	0.266
08-12-2009 13:45:12	11.694	8.121	-0.813	72.83	23.736	10.358	8.700	48.48	0.276
08-12-2009 13:46:12	10.938	8.782	-0.926	92.19	19.472	10.995	8.926	48.34	0.230
08-12-2009 13:47:12	11.931	7.866	-0.872	89.18	13.117	12.236	7.653	40.86	0.260
08-12-2009 13:48:12	12.614	7.308	-0.808	49.87	16.746	11.353	7.691	47.50	0.359
08-12-2009 13:49:12	11.402	8.403	-0.749	52.62	28.298	10.393	9.074	51.95	0.467
08-12-2009 13:50:12	11.176	8.613	-0.899	77.98	16.541	11.408	8.531	47.38	0.397
08-12-2009 13:51:12	12.094	7.741	-0.959	66.17	10.567	11.805	7.760	47.92	0.361
08-12-2009 13:52:12	12.151	7.624	-1.072	51.53	15.425	11.696	7.938	56.18	0.434
08-12-2009 13:53:12	12.416	7.438	-0.937	52.98	19.249	12.275	7.436	51.06	0.268
08-12-2009 13:54:12	12.431	7.399	-0.889	50.36	22.948	11.083	7.983	61.96	0.240
08-12-2009 13:55:12	11.647	8.063	-0.867	75.83	25.243	11.841	8.169	58.27	0.172
Run Averages	O2-S	CO2-S	SO2-S	NOx-S	CO-S	O2-In	CO2-In	SO2-In	THC-S
	%	%	ppm	ppm	ppm	%	%	ppm	ppm
08-12-2009 13:55:12	11.862	7.963	-0.763	64.06	21.510	11.332	8.258	39.67	0.311

Operator: Bill Harris
Plant Name: Huntington RRF
Location: Unit 2 Inlet and Outlet
Test Run 7 End

Final System Bias Check for Run 7 . STRATA Version 3.2

Operator:		Bill Harris
Plant Name:		Huntington RRF
Location:		Unit 2 Inlet and Outlet
	Reference Cylinder Numbers	
	Zero	Span
O2-S		XC033526B
CO2-S		XC033526B
SO2-S		CC41281
NOx-S		CC21496
CO-S		SG9113307BAL
O2-In		XC033526B
CO2-In		XC033526B
SO2-In		CC129649
THC-S		XC011445B

Date/Time	8/12/2009	14:09:20 PASSED							
Analyte	O2-S	CO2-S	SO2-S	NOx-S	CO-S	O2-In	CO2-In	SO2-In	THC-S
Units	%	%	ppm	ppm	ppm	%	%	ppm	ppm
Zero Ref Cyl	0	0	0	0	0	0	0	0	0
Zero Cal	0.012	0.01	0.161	0.45	-0.027	0.003	-0.038	0.69	-0.01
Zero Avg	0.032	0.067	0.161	0.06	-1.491	0.231	-0.038	1.2	0.179
Zero Bias%	0.1	0.3	0	0.1	1.6	1	0	0.1	0.6
Zero Drift%	0	0.1	-0.9	0	-0.9	-0.5	0	-0.1	-0.1
Span Ref Cyl	9.934	8.87	46.4	241.1	45.07	9.934	8.87	236.9	10.44
Span Cal	9.982	8.91	46.463	241.79	45.399	9.951	8.852	237.33	10.408
Span Avg	9.925	9.012	42.539	238.63	43.361	10.114	8.955	229.77	10.573
Span Bias%	0.3	0.6	4.3	0.7	2.3	0.7	0.6	1.5	0.5
Span Drift%	0.9	1.1	-1.3	-0.4	1.7	-1.3	1.8	2.3	0.3
Ini Zero Avg	0.037	0.048	0.946	-0.07	-0.662	0.344	-0.035	1.71	0.207
Ini Span Avg	9.731	8.817	43.739	240.69	41.83	10.389	8.626	218.47	10.469
Run Avg	11.862	7.963	-0.763	64.06	21.51	11.332	8.258	39.67	0.311
Co	0.034	0.057	0.55	0	-1.077	0.288	-0.036	1.45	0.193
Cm	9.828	8.914	43.14	239.66	42.595	10.251	8.791	224.12	10.521
Correct Avg	11.997	7.917	-1.434	64.450	23.310	11.012	8.335	40.660	0.119

Test Run 8 STRATA Version 3.2

	O2-S	CO2-S	SO2-S	NOx-S	CO-S	O2-In	CO2-In	SO2-In	THC-S
	%	%	ppm	ppm	ppm	%	%	ppm	ppm
Begin calculating run averages									
08-12-2009 14:11:38	11.244	8.248	1.422	73.45	24.067	11.081	8.455	77.91	0.276
08-12-2009 14:12:38	12.155	7.473	0.603	60.62	15.175	12.520	7.249	64.72	0.258
08-12-2009 14:13:38	13.196	6.592	0.199	32.62	15.989	12.632	6.753	69.91	0.299
08-12-2009 14:14:38	13.141	6.632	-0.022	34.83	26.647	12.108	6.952	67.22	0.357
08-12-2009 14:15:38	12.544	7.118	-0.307	38.83	25.656	11.650	7.484	69.33	0.246
08-12-2009 14:16:37	12.224	7.372	-0.490	39.32	22.469	11.549	7.655	63.25	0.224
08-12-2009 14:17:37	12.239	7.437	-0.522	39.38	21.661	11.487	7.603	60.67	0.229
08-12-2009 14:18:37	12.028	7.547	-0.619	39.80	21.009	11.327	7.800	55.37	0.194
08-12-2009 14:19:37	11.923	7.623	-0.458	48.16	16.213	11.756	7.781	49.87	0.151
08-12-2009 14:20:37	12.509	7.127	-0.571	43.30	12.340	12.551	7.013	40.13	0.102
08-12-2009 14:21:37	12.933	6.772	-0.754	34.41	15.406	12.060	7.096	39.61	0.083
08-12-2009 14:22:37	12.481	7.167	-0.813	51.63	20.130	12.003	7.391	36.27	0.271
08-12-2009 14:23:37	12.243	7.370	-0.856	54.43	19.871	11.318	7.826	35.41	0.211
08-12-2009 14:24:37	11.903	7.672	-0.835	72.39	14.985	11.554	7.764	34.97	0.245
08-12-2009 14:25:37	12.050	7.538	-0.905	64.27	10.520	11.966	7.580	32.19	0.198
08-12-2009 14:26:37	12.462	7.197	-0.937	49.24	10.715	11.964	7.271	29.89	0.211
08-12-2009 14:27:37	12.021	7.563	-0.840	52.81	13.028	10.847	8.072	32.66	0.222
08-12-2009 14:28:37	11.635	7.897	-0.905	81.05	13.238	11.954	7.742	26.32	0.247
08-12-2009 14:29:37	12.668	7.037	-0.964	55.05	7.493	12.851	6.908	23.09	0.149
08-12-2009 14:30:37	13.174	6.608	-1.045	36.35	9.450	12.200	6.898	25.08	0.185
08-12-2009 14:31:37	12.394	7.275	-0.969	49.25	14.522	11.438	7.719	26.53	0.163
08-12-2009 14:32:37	11.830	7.760	-1.045	69.42	15.794	11.432	8.058	26.38	0.096
08-12-2009 14:33:37	12.252	7.423	-1.120	63.72	9.961	12.751	7.222	23.55	0.034
08-12-2009 14:34:37	13.330	6.515	-1.018	37.23	11.503	12.169	6.595	24.96	-0.032
Run Averages	O2-S	CO2-S	SO2-S	NOx-S	CO-S	O2-In	CO2-In	SO2-In	THC-S
	%	%	ppm	ppm	ppm	%	%	ppm	ppm
08-12-2009 14:34:37	12.357	7.291	-0.572	50.92	16.161	11.882	7.454	43.15	0.192

Operator: Bill Harris
Plant Name: Huntington RRF
Location: Unit 2 Inlet and Outlet
Test Run 8 End

Final System Bias Check for Run 8 . STRATA Version 3.2

Operator:	Bill Harris
Plant Name:	Huntington RRF
Location:	Unit 2 Inlet and Outlet

Reference Cylinder Numbers

	Zero	Span
O2-S		XC033526B
CO2-S		XC033526B
SO2-S		CC41281
NOx-S		CC21496
CO-S		SG9113307BAL
O2-In		XC033526B
CO2-In		XC033526B
SO2-In		CC129649
THC-S		XC011445B

Date/Time	8/12/2009	14:42:45 PASSED							
Analyte	O2-S	CO2-S	SO2-S	NOx-S	CO-S	O2-In	CO2-In	SO2-In	THC-S
Units	%	%	ppm	ppm	ppm	%	%	ppm	ppm
Zero Ref Cyl	0	0	0	0	0	0	0	0	0
Zero Cal	0.012	0.01	0.161	0.45	-0.027	0.003	-0.038	0.69	-0.01
Zero Avg	0.027	0.073	0.346	-0.13	-0.864	0.131	-0.036	1.71	0.218
Zero Bias%	0.1	0.4	0.2	0.1	0.9	0.6	0	0.2	0.8
Zero Drift%	0	0	0.2	0	0.7	-0.5	0	0.1	0.1
Span Ref Cyl	9.934	8.87	46.4	241.1	45.07	9.934	8.87	236.9	10.44
Span Cal	9.982	8.91	46.463	241.79	45.399	9.951	8.852	237.33	10.408
Span Avg	9.825	8.92	44.663	238.74	42.717	10.038	8.811	227.73	10.446
Span Bias%	0.7	0.1	2	0.6	3	0.4	0.2	2	0.1
Span Drift%	-0.5	-0.5	2.3	0	-0.7	-0.3	-0.8	-0.4	-0.4
Ini Zero Avg	0.032	0.067	0.161	0.06	-1.491	0.231	-0.038	1.2	0.179
Ini Span Avg	9.925	9.012	42.539	238.63	43.361	10.114	8.955	229.77	10.573
Run Avg	12.357	7.291	-0.572	50.92	16.161	11.882	7.454	43.15	0.192
Co	0.029	0.07	0.25	-0.04	-1.178	0.181	-0.037	1.46	0.199
Cm	9.875	8.966	43.60	238.69	43.039	10.076	8.883	228.75	10.51
Correct Avg	12.438	7.199	-0.884	51.470	17.673	11.747	7.449	43.450	-0.006

Test Run 9 STRATA Version 3.2

	O2-S	CO2-S	SO2-S	NOx-S	CO-S	O2-In	CO2-In	SO2-In	THC-S
	%	%	ppm	ppm	ppm	%	%	ppm	ppm
Begin calculating run averages									
08-12-2009 14:46:06	13.389	6.452	0.055	43.29	9.572	13.203	6.465	34.37	3.959
08-12-2009 14:47:05	13.749	6.151	-0.260	33.36	14.685	12.669	6.634	37.94	0.457
08-12-2009 14:48:05	13.364	6.439	-0.506	39.02	19.341	12.357	6.908	39.91	0.479
08-12-2009 14:49:05	12.954	6.814	-0.598	41.74	26.280	11.812	7.359	38.44	0.490
08-12-2009 14:50:05	12.488	7.221	-0.587	59.33	20.501	11.519	7.725	37.27	0.468
08-12-2009 14:51:05	12.445	7.337	-0.824	69.87	18.145	11.474	7.667	35.63	0.465
08-12-2009 14:52:05	12.270	7.481	-0.824	65.21	20.444	11.571	7.865	31.97	0.540
08-12-2009 14:53:05	12.342	7.415	-0.856	63.44	14.947	11.524	7.775	33.07	0.502
08-12-2009 14:54:05	12.193	7.502	-0.802	60.71	18.227	11.321	7.973	31.24	0.454
08-12-2009 14:55:05	11.985	7.686	-1.029	57.82	16.181	11.123	8.164	29.92	0.455
08-12-2009 14:56:05	11.815	7.813	-0.996	67.24	12.658	11.017	8.294	28.80	0.489
08-12-2009 14:57:05	11.680	7.952	-1.045	71.82	15.258	11.064	8.427	28.64	0.500
08-12-2009 14:58:05	12.225	7.518	-1.115	63.48	13.344	12.505	7.421	22.91	0.493
08-12-2009 14:59:05	13.143	6.748	-1.174	42.85	14.223	12.249	7.032	23.84	0.467
08-12-2009 15:00:05	12.786	7.025	-1.104	46.97	21.299	12.092	7.415	23.41	0.456
08-12-2009 15:01:05	12.638	7.190	-1.142	52.19	22.120	11.643	7.658	23.09	0.378
08-12-2009 15:02:05	12.374	7.441	-1.120	57.74	24.152	11.796	7.742	23.48	0.397
08-12-2009 15:03:05	12.316	7.467	-1.212	58.47	24.898	11.191	7.971	27.02	0.413
08-12-2009 15:04:05	11.921	7.808	-1.255	68.54	18.133	11.419	8.136	28.06	0.411
08-12-2009 15:05:05	12.210	7.605	-1.244	68.08	19.948	11.669	7.786	23.86	0.374
08-12-2009 15:06:05	12.083	7.667	-1.223	63.30	19.342	10.708	8.270	26.83	0.453
08-12-2009 15:07:05	11.448	8.222	-1.190	80.21	15.256	11.042	8.541	28.07	0.446
08-12-2009 15:08:05	11.855	7.886	-1.201	73.18	15.654	11.203	8.136	26.90	0.349
08-12-2009 15:09:06	11.786	7.878	-1.223	68.49	19.087	10.817	8.372	29.00	0.305
Run Averages	O2-S	CO2-S	SO2-S	NOx-S	CO-S	O2-In	CO2-In	SO2-In	THC-S
	%	%	ppm	ppm	ppm	%	%	ppm	ppm
08-12-2009 15:09:06	12.394	7.364	-0.936	59.02	18.067	11.625	7.739	29.73	0.594

Operator: Bill Harris
Plant Name: Huntington RRF
Location: Unit 2 Inlet and Outlet
Test Run 9 End

Final System Bias Check for Run 9 . STRATA Version 3.2

Operator: Bill Harris
Plant Name: Huntington RRF
Location: Unit 2 Inlet and Outlet

	Reference Cylinder Numbers	
	Zero	Span
O2-S		XC033526B
CO2-S		XC033526B
SO2-S		CC41281
NOx-S		CC21496
CO-S		SG9113307BAL
O2-In		XC033526B
CO2-In		XC033526B
SO2-In		CC129649
THC-S		XC011445B

Date/Time	8/12/2009	15:18:15 PASSED							
Analyte	O2-S	CO2-S	SO2-S	NOx-S	CO-S	O2-In	CO2-In	SO2-In	THC-S
Units	%	%	ppm	ppm	ppm	%	%	ppm	ppm
Zero Ref Cyl	0	0	0	0	0	0	0	0	0
Zero Cal	0.012	0.01	0.161	0.45	-0.027	0.003	-0.038	0.69	-0.01
Zero Avg	0.032	0.098	-0.161	-0.22	-2.064	0.106	-0.035	0.25	-0.024
Zero Bias%	0.1	0.5	0.4	0.1	2.3	0.5	0	0.1	0
Zero Drift%	0	0.1	-0.6	0	-1.3	-0.1	0	-0.3	-0.8
Span Ref Cyl	9.934	8.87	46.4	241.1	45.07	9.934	8.87	236.9	10.44
Span Cal	9.982	8.91	46.463	241.79	45.399	9.951	8.852	237.33	10.408
Span Avg	9.876	9.012	42.862	236.15	42.744	10.044	8.929	229.06	10.497
Span Bias%	0.5	0.6	3.9	1.2	3	0.4	0.4	1.7	0.3
Span Drift%	0.2	0.5	-2	-0.5	0	0	0.7	0.3	0.2
Ini Zero Avg	0.027	0.073	0.346	-0.13	-0.864	0.131	-0.036	1.71	0.218
Ini Span Avg	9.825	8.92	44.663	238.74	42.717	10.038	8.811	227.73	10.446
Run Avg	12.394	7.364	-0.936	59.02	18.067	11.625	7.739	29.73	0.594
Co	0.029	0.086	0.09	-0.18	-1.464	0.119	-0.036	0.98	0.097
Cm	9.851	8.966	43.76	237.45	42.73	10.041	8.87	228.39	10.471
Correct Avg	12.506	7.269	-1.093	60.070	19.918	11.520	7.743	29.950	0.500

Test Run 10 STRATA Version 3.2

	O2-S	CO2-S	SO2-S	NOx-S	CO-S	O2-In	CO2-In	SO2-In	THC-S
	%	%	ppm	ppm	ppm	%	%	ppm	ppm
Begin calculating run averages									
08-12-2009 15:21:05	12.507	7.258	0.304	58.46	5.463	12.447	7.207	31.12	0.309
08-12-2009 15:22:05	13.057	6.785	-0.204	34.84	6.746	11.519	7.300	37.09	0.306
08-12-2009 15:23:05	12.050	7.664	-0.555	54.06	13.936	10.866	8.307	37.52	0.320
08-12-2009 15:24:05	12.041	7.676	-0.630	64.00	11.266	12.041	7.695	31.94	0.320
08-12-2009 15:25:04	12.852	6.985	-0.868	40.94	8.441	11.602	7.353	34.31	0.379
08-12-2009 15:26:04	12.011	7.693	-0.905	43.29	14.606	10.742	8.303	39.21	0.403
08-12-2009 15:27:04	11.925	7.787	-0.921	61.11	14.081	12.140	7.733	32.47	0.456
08-12-2009 15:28:04	13.109	6.793	-1.099	39.46	10.760	12.470	6.877	31.70	0.549
08-12-2009 15:29:04	12.712	7.113	-0.980	33.58	21.751	11.546	7.689	37.46	0.522
08-12-2009 15:30:04	12.138	7.628	-1.093	45.35	25.163	11.183	8.088	36.98	0.401
08-12-2009 15:31:04	11.827	7.931	-1.023	60.89	20.724	11.468	8.215	34.78	0.374
08-12-2009 15:32:04	12.038	7.762	-1.083	58.56	19.162	11.018	8.181	38.73	0.345
08-12-2009 15:33:04	11.788	7.982	-1.115	59.51	26.689	11.307	8.184	37.35	0.359
08-12-2009 15:34:04	11.929	7.834	-1.298	57.91	19.373	11.005	8.188	41.37	0.283
08-12-2009 15:35:04	11.618	8.087	-1.120	62.92	19.406	11.377	8.354	40.33	0.283
08-12-2009 15:36:04	12.158	7.636	-1.331	58.28	13.926	11.366	7.864	40.13	0.370
08-12-2009 15:37:04	11.760	7.964	-1.282	51.19	18.900	10.881	8.448	41.54	0.365
08-12-2009 15:38:04	11.634	8.140	-1.287	59.13	18.653	11.320	8.296	40.97	0.332
08-12-2009 15:39:04	12.105	7.730	-1.298	55.88	14.310	11.618	7.870	41.82	0.256
08-12-2009 15:40:04	11.958	7.794	-1.271	49.43	12.675	10.937	8.301	47.91	0.345
08-12-2009 15:41:04	11.550	8.151	-1.347	60.07	20.499	10.877	8.407	49.32	0.323
08-12-2009 15:42:04	11.553	8.122	-1.325	68.26	12.226	11.271	8.282	52.07	0.361
08-12-2009 15:43:04	12.139	7.603	-1.368	66.22	10.575	12.069	7.555	51.33	0.393
08-12-2009 15:44:04	12.403	7.359	-1.562	48.05	14.647	11.323	7.751	63.03	0.386
Run Averages	O2-S	CO2-S	SO2-S	NOx-S	CO-S	O2-In	CO2-In	SO2-In	THC-S
	%	%	ppm	ppm	ppm	%	%	ppm	ppm
08-12-2009 15:44:04	12.119	7.645	-1.027	53.82	15.580	11.434	7.935	40.43	0.364

Operator: Bill Harris
Plant Name: Huntington RRF
Location: Unit 2 Inlet and Outlet
Test Run 10 End

Final System Bias Check for Run 10 . STRATA Version 3.2

Operator:		Bill Harris
Plant Name:		Huntington RRF
Location:		Unit 2 Inlet and Outlet
	Reference Cylinder Numbers	
	Zero	Span
O2-S		XC033526B
CO2-S		XC033526B
SO2-S		CC41281
NOx-S		CC21496
CO-S		SG9113307BAL
O2-In		XC033526B
CO2-In		XC033526B
SO2-In		CC129649
THC-S		XC011445B

Date/Time	8/12/2009	15:52:16 PASSED							
Analyte	O2-S	CO2-S	SO2-S	NOx-S	CO-S	O2-In	CO2-In	SO2-In	THC-S
Units	%	%	ppm	ppm	ppm	%	%	ppm	ppm
Zero Ref Cyl	0	0	0	0	0	0	0	0	0
Zero Cal	0.012	0.01	0.161	0.45	-0.027	0.003	-0.038	0.69	-0.01
Zero Avg	0.027	0.14	-0.392	-0.01	-1.291	0.192	-0.034	2.02	0.073
Zero Bias%	0.1	0.7	0.6	0.1	1.4	0.9	0	0.3	0.3
Zero Drift%	0	0.2	-0.3	0	0.9	0.4	0	0.4	0.3
Span Ref Cyl	9.934	8.87	46.4	241.1	45.07	9.934	8.87	236.9	10.44
Span Cal	9.982	8.91	46.463	241.79	45.399	9.951	8.852	237.33	10.408
Span Avg	9.763	8.968	43.047	235.63	42.502	10.087	8.704	227.4	10.353
Span Bias%	1	0.3	3.7	1.3	3.2	0.6	0.8	2	0.2
Span Drift%	-0.5	-0.2	0.2	-0.1	-0.3	0.2	-1.3	-0.3	-0.5
Ini Zero Avg	0.032	0.098	-0.161	-0.22	-2.064	0.106	-0.035	0.25	-0.024
Ini Span Avg	9.876	9.012	42.862	236.15	42.744	10.044	8.929	229.06	10.497
Run Avg	12.119	7.645	-1.027	53.82	15.58	11.434	7.935	40.43	0.364
Co	0.029	0.119	-0.28	-0.12	-1.678	0.149	-0.035	1.13	0.025
Cm	9.82	8.99	42.95	235.89	42.623	10.066	8.816	228.23	10.425
Correct Avg	12.267	7.525	-0.806	55.100	17.558	11.304	7.987	41.000	0.341

Calibration Error Test at Run 1 . STRATA Version 3.2

Operator: Bill Harris

Plant Name: Huntington RRF

Location: Unit 3 Inlet and Outlet

Reference Cylinder Numbers

	Zero	Low-range	Mid-range	High-range
O2-S			XC033526B	SG895387ALB
CO2-S			XC033526B	SG895387ALB
SO2-S			CC41281	CC61542
NOx-S		FF837	CC21496	FF747
CO-S			SG9113307BAL	FF43261
O2-In			XC033526B	SG895387ALB
CO2-In			XC033526B	SG895387ALB
SO2-In			CC129649	XC022664B
THC-S		XC011445B	FF37711	XF003030B

Date/Time	8/11/2009		8:30:30	PASSED					
Analyte	O2-S	CO2-S	SO2-S	NOx-S	CO-S	O2-In	CO2-In	SO2-In	THC-S
Units	%	%	ppm	ppm	ppm	%	%	ppm	ppm
Zero Ref Cyl	0.000	0.000	0.000	0.000	0.000	0.000	0.000	0.000	0.000
Zero Avg	0.02	0.181	0.254	2.63	0.314	-0.001	-0.035	0.46	0.054
Zero Error%	0.1	1.0	0.3	0.5	0.4	0.0	0.2	0.1	0.2
Low Ref Cyl					50.51				10.44
Low Avg					50.2				10.426
Low Error%					0.6				0.0
Mid Ref Cyl	9.934	8.87	46.4	241.1	45.07	9.934	8.87	236.9	15.34
Mid Avg	9.933	9.094	46.694	241.14	45.613	9.946	8.96	237.47	15.009
Mid Error%	0.0	1.3	0.6	0.0	0.6	0.1	-0.5	0.1	1.1
High Ref Cyl	21.9	17.79	91.63	482.4	89.29	21.9	17.79	490.7	26.15
High Avg	21.901	17.94	93.224	484.62	87.673	21.993	17.635	484.87	25.963
High Error%	0	0.8	1.7	0.5	1.8	0.4	0.9	1.2	0.6

Calibration Error Test End

Initial System Bias Check for Run 1 . STRATA Version 3.2

Operator:	Bill Harris
Plant Name:	Huntington RRF
Location:	Unit 3 Inlet and Outlet

	Reference Cylinder Numbers	
	Zero	Span
O2-S		XC033526B
CO2-S		XC033526B
SO2-S		CC41281
NOx-S		CC21496
CO-S		SG9113307BAL
O2-In		XC033526B
CO2-In		XC033526B
SO2-In		CC129649
THC-S		XC011445B

Date/Time	8/11/2009		8:52:30		PASSED				
Analyte	O2-S	CO2-S	SO2-S	NOx-S	CO-S	O2-In	CO2-In	SO2-In	THC-S
Units	%	%	ppm	ppm	ppm	%	%	ppm	ppm
Zero Ref Cyl	0.0	0.0	0.0	0.0	0.0	0.0	0.0	0.0	0.0
Zero Cal	0.02	0.181	0.254	2.63	0.314	-0.001	-0.035	0.46	0.054
Zero Avg	0.568	0.181	0.115	-0.46	0.518	-0.014	-0.035	18.41	0.071
Zero Bias%	2.5	0.0	0.2	0.6	0.2	0.1	0.0	3.7	0.1
Zero Drift%									
Span Ref Cyl	9.934	8.87	46.4	241.1	45.07	9.934	8.87	236.9	10.44
Span Cal	9.933	9.094	46.694	241.14	45.613	9.946	8.96	237.47	10.426
Span Avg	10.185	8.811	47.155	240.2	43.429	9.843	8.935	235.84	10.39
Span Bias%	1.2	1.6	0.5	0.2	2.4	0.5	-0.01	0.3	0.1
Span Drift%									

Test Run 1 STRATA Version 3.2

	O2-S	CO2-S	SO2-S	NOx-S	CO-S	O2-In	CO2-In	SO2-In	THC-S
	%	%	ppm	ppm	ppm	%	%	ppm	ppm
Begin calculating run averages									
08-11-2009 08:55:31	11.695	8.120	3.165	74.09	10.478	11.201	8.419	91.59	0.138
08-11-2009 08:56:31	11.830	8.028	2.822	67.44	8.128	11.948	8.293	97.02	0.175
08-11-2009 08:57:30	12.268	7.674	2.752	48.88	9.729	11.402	8.254	103.87	0.153
08-11-2009 08:58:30	11.758	8.127	3.151	59.40	11.850	11.624	8.372	110.42	0.069
08-11-2009 08:59:30	12.114	7.865	3.136	53.57	11.619	11.863	8.262	108.68	0.033
08-11-2009 09:00:30	12.310	7.734	3.113	51.59	11.227	11.998	8.239	109.29	0.088
08-11-2009 09:01:30	12.482	7.588	3.247	51.23	15.379	11.986	8.169	113.62	0.050
08-11-2009 09:02:30	12.315	7.684	3.942	52.38	19.665	12.219	8.214	116.31	-0.036
08-11-2009 09:03:30	12.364	7.635	4.433	46.15	20.688	11.893	8.238	120.18	-0.073
08-11-2009 09:04:30	12.126	7.828	5.170	51.35	23.339	12.008	8.290	134.90	0.030
08-11-2009 09:05:30	12.350	7.692	8.795	56.23	20.299	12.189	8.184	138.09	0.257
08-11-2009 09:06:30	12.291	7.675	8.498	51.20	19.309	11.804	8.247	128.23	0.444
08-11-2009 09:07:30	11.950	7.993	8.525	61.00	20.055	11.932	8.343	118.53	0.501
08-11-2009 09:08:30	12.068	7.893	7.868	59.57	20.435	11.711	8.322	106.16	0.586
08-11-2009 09:09:30	11.836	8.072	5.477	54.03	22.131	11.597	8.391	98.67	0.569
08-11-2009 09:10:30	11.889	8.048	4.141	61.57	19.134	11.735	8.334	88.63	0.532
08-11-2009 09:11:30	11.831	8.017	3.080	62.23	17.256	11.582	8.382	82.91	0.520
08-11-2009 09:12:30	11.705	8.141	2.256	69.11	15.821	11.715	8.405	77.76	0.497
08-11-2009 09:13:30	12.043	7.868	1.772	59.99	18.036	11.700	8.284	70.36	0.547
08-11-2009 09:14:30	11.778	8.034	1.519	57.61	17.187	11.486	8.389	67.08	0.463
08-11-2009 09:15:30	11.868	7.998	0.975	64.11	13.224	12.048	8.289	60.62	0.397
08-11-2009 09:16:30	12.126	7.748	0.813	56.29	15.900	11.727	8.268	55.05	0.362
08-11-2009 09:17:30	11.991	7.881	0.700	60.75	15.001	11.844	8.271	52.47	0.311
08-11-2009 09:18:30	12.009	7.853	0.587	55.78	15.511	11.546	8.303	48.11	0.314
Run Averages	O2-S	CO2-S	SO2-S	NOx-S	CO-S	O2-In	CO2-In	SO2-In	THC-S
	%	%	ppm	ppm	ppm	%	%	ppm	ppm
08-11-2009 09:18:30	12.041	7.883	3.748	57.75	16.312	11.781	8.299	95.76	0.289

Operator: Bill Harris
Plant Name: Huntington RRF
Location: Unit 3 Inlet and Outlet
Test Run 1 End

Final System Bias Check for Run 1 . STRATA Version 3.2

Operator: Bill Harris
Plant Name: Huntington RRF
Location: Unit 3 Inlet and Outlet

	Reference Cylinder Numbers	
	Zero	Span
O2-S		XC033526B
CO2-S		XC033526B
SO2-S		CC41281
NOx-S		CC21496
CO-S		SG9113307BAL
O2-In		XC033526B
CO2-In		XC033526B
SO2-In		CC129649
THC-S		XC011445B

Date/Time 8/11/2009 9:32:43 PASSED

Analyte	O2-S	CO2-S	SO2-S	NOx-S	CO-S	O2-In	CO2-In	SO2-In	THC-S
Units	%	%	ppm	ppm	ppm	%	%	ppm	ppm
Zero Ref Cyl	0	0	0	0	0	0	0	0	0
Zero Cal	0.02	0.181	0.254	2.63	0.314	-0.001	-0.035	0.46	0.054
Zero Avg	0.03	0.21	0.485	-0.48	0.732	0.001	-0.034	6.98	-0.022
Zero Bias%	0	0.2	0.3	0.6	0.5	0	0	1.3	0.3
Zero Drift%	-2.5	0.2	0.4	0	0.2	0.1	0	-2.3	-0.3
Span Ref Cyl	9.934	8.87	46.4	241.1	45.07	9.934	8.87	236.9	10.44
Span Cal	9.933	9.094	46.694	241.14	45.613	9.946	8.96	237.47	10.426
Span Avg	9.89	9.132	45.17	229.31	43.401	9.723	8.822	224.11	10.348
Span Bias%	0.2	0.2	1.7	2.5	2.5	1	0.8	2.7	0.3
Span Drift%	-1.3	1.8	-2.2	-2.3	0	-0.5	-0.6	-2.4	-0.1
Ini Zero Avg	0.568	0.181	0.115	-0.46	0.518	-0.014	-0.035	18.41	0.071
Ini Span Avg	10.185	8.811	47.155	240.2	43.429	9.843	8.935	235.84	10.39
Run Avg	12.041	7.883	3.748	57.75	16.312	11.781	8.299	95.76	0.289
Co	0.299	0.195	0.30	-0.47	0.625	-0.007	-0.035	12.7	0.024
Cm	10.037	8.971	46.16	234.76	43.415	9.783	8.878	229.98	10.369
Correct Avg	11.978	7.771	3.488	59.680	16.523	11.962	8.293	90.560	0.267

Test Run 2 STRATA Version 3.2

	O2-S	CO2-S	SO2-S	NOx-S	CO-S	O2-In	CO2-In	SO2-In	THC-S
	%	%	ppm	ppm	ppm	%	%	ppm	ppm
Begin calculating run averages									
08-11-2009 10:12:03	12.127	7.765	6.847	50.79	15.768	12.870	7.849	92.88	0.573
08-11-2009 10:13:03	12.311	7.658	7.114	50.03	14.387	12.961	7.792	97.59	0.670
08-11-2009 10:14:03	12.241	7.650	6.899	47.80	16.965	12.909	7.836	106.37	0.709
08-11-2009 10:15:03	12.376	7.591	7.529	45.60	17.679	13.057	7.765	110.81	0.728
08-11-2009 10:16:03	12.425	7.540	9.425	44.80	20.083	12.976	7.755	122.02	0.821
08-11-2009 10:17:03	12.344	7.588	13.243	46.05	21.914	12.581	7.812	118.10	0.667
08-11-2009 10:18:03	11.269	8.648	13.237	57.89	24.329	11.733	8.272	117.97	0.569
08-11-2009 10:19:03	11.353	8.577	10.076	82.23	14.904	12.738	8.012	99.30	0.602
08-11-2009 10:20:03	12.175	7.802	6.516	60.83	13.082	12.554	7.846	97.86	0.717
08-11-2009 10:21:03	11.345	8.532	4.723	56.36	17.616	11.872	8.205	99.68	0.672
08-11-2009 10:22:03	11.342	8.556	3.371	56.26	14.743	12.559	8.040	93.48	0.630
08-11-2009 10:23:03	11.878	8.066	2.052	46.72	13.203	12.636	7.933	93.65	0.667
08-11-2009 10:24:03	11.800	8.065	1.298	45.77	17.285	12.458	7.964	88.80	0.702
08-11-2009 10:25:03	11.880	7.999	0.856	56.04	11.599	12.744	7.876	80.59	0.705
08-11-2009 10:26:03	11.875	7.947	0.600	51.55	12.748	12.490	7.935	80.43	0.651
08-11-2009 10:27:03	11.377	8.436	0.140	59.45	16.463	11.804	8.148	84.48	0.707
08-11-2009 10:28:03	11.285	8.554	-0.145	77.90	11.216	12.419	8.023	71.08	0.538
08-11-2009 10:29:03	11.697	8.183	-0.511	69.73	8.364	12.569	7.950	71.25	0.560
08-11-2009 10:30:03	11.896	7.986	-0.571	64.77	8.758	12.653	7.886	74.06	0.658
08-11-2009 10:31:03	11.883	7.948	-0.716	63.90	8.943	12.549	7.904	78.75	0.777
08-11-2009 10:32:03	11.942	7.925	-0.808	62.94	8.579	12.855	7.871	84.50	0.782
08-11-2009 10:33:03	12.313	7.637	-0.808	52.48	11.939	13.026	7.754	76.87	0.755
08-11-2009 10:34:03	12.253	7.642	-0.727	47.37	16.180	12.757	7.827	74.23	0.770
08-11-2009 10:35:03	11.778	8.080	-0.926	48.48	17.289	12.376	8.001	75.84	0.677
Run Averages	O2-S	CO2-S	SO2-S	NOx-S	CO-S	O2-In	CO2-In	SO2-In	THC-S
	%	%	ppm	ppm	ppm	%	%	ppm	ppm
08-11-2009 10:35:03	11.882	8.016	3.701	56.07	14.754	12.590	7.927	91.28	0.679

Operator: Bill Harris
Plant Name: Huntington RRF
Location: Unit 3 Inlet and Outlet
Test Run 2 End

Final System Bias Check for Run 2 . STRATA Version 3.2

Operator:		Bill Harris
Plant Name:		Huntington RRF
Location:		Unit 3 Inlet and Outlet
	Reference Cylinder Numbers	
	Zero	Span
O2-S		XC033526B
CO2-S		XC033526B
SO2-S		CC41281
NOx-S		CC21496
CO-S		SG9113307BAL
O2-In		XC033526B
CO2-In		XC033526B
SO2-In		CC129649
THC-S		XC011445B

Date/Time	8/11/2009	10:47:15 PASSED							
Analyte	O2-S	CO2-S	SO2-S	NOx-S	CO-S	O2-In	CO2-In	SO2-In	THC-S
Units	%	%	ppm	ppm	ppm	%	%	ppm	ppm
Zero Ref Cyl	0	0	0	0	0	0	0	0	0
Zero Cal	0.02	0.181	0.254	2.63	0.314	-0.001	-0.035	0.46	0.054
Zero Avg	0.027	0.225	3.116	-0.45	0.175	0.422	0.013	0.69	0.166
Zero Bias%	0	0.2	3.1	0.6	0.2	1.9	0.3	0	0.4
Zero Drift%	0	0.1	2.9	0	-0.6	1.9	0.3	-1.3	0.6
Span Ref Cyl	9.934	8.87	46.4	241.1	45.07	9.934	8.87	236.9	10.44
Span Cal	9.933	9.094	46.694	241.14	45.613	9.946	8.96	237.47	10.426
Span Avg	9.869	9.14	44.201	219.49	43.599	10.14	8.662	217.89	10.1
Span Bias%	0.3	0.3	2.7	4.5	2.3	0.9	1.7	4	1.1
Span Drift%	-0.1	0	-1.1	-2	0.2	1.9	-0.9	-1.3	-0.8
Ini Zero Avg	0.03	0.21	0.485	-0.48	0.732	0.001	-0.034	6.98	-0.022
Ini Span Avg	9.89	9.132	45.17	229.31	43.401	9.723	8.822	224.11	10.348
Run Avg	11.882	8.016	3.701	56.07	14.754	12.59	7.927	91.28	0.679
Co	0.028	0.218	1.80	-0.47	0.453	0.212	-0.011	3.84	0.072
Cm	9.879	9.136	44.69	224.4	43.5	9.932	8.742	221	10.224
Correct Avg	11.953	7.756	2.056	60.620	14.972	12.650	8.044	95.390	0.625

Test Run 3 STRATA Version 3.2

	O2-S	CO2-S	SO2-S	NOx-S	CO-S	O2-In	CO2-In	SO2-In	THC-S
	%	%	ppm	ppm	ppm	%	%	ppm	ppm
Begin calculating run averages									
08-11-2009 11:23:51	11.904	7.963	-0.506	69.90	8.882	11.821	8.107	40.29	0.173
08-11-2009 11:24:51	11.479	8.336	-0.528	80.42	8.598	11.680	8.277	43.30	0.396
08-11-2009 11:25:51	11.572	8.308	-0.490	82.87	7.952	11.848	8.215	43.15	0.421
08-11-2009 11:26:51	11.704	8.149	-0.447	74.23	6.373	11.795	8.182	44.03	0.231
08-11-2009 11:27:51	11.508	8.265	-0.388	72.90	7.321	11.680	8.255	44.62	0.117
08-11-2009 11:28:51	11.617	8.219	-0.501	75.28	7.133	11.781	8.171	43.33	0.179
08-11-2009 11:29:51	11.431	8.339	-0.506	77.76	6.598	11.610	8.275	45.34	0.352
08-11-2009 11:30:51	11.523	8.309	-0.662	79.98	5.922	11.750	8.221	42.12	0.285
08-11-2009 11:31:51	11.658	8.141	-0.592	70.72	5.306	12.020	8.150	39.80	0.295
08-11-2009 11:32:51	11.943	7.883	-0.743	54.64	5.760	12.194	8.043	40.23	0.143
08-11-2009 11:33:51	11.949	7.833	-0.711	48.55	6.401	11.961	8.074	41.60	0.106
08-11-2009 11:34:51	11.620	8.054	-0.581	51.41	6.709	11.816	8.178	43.28	0.005
08-11-2009 11:35:51	11.802	7.937	-0.716	51.54	5.491	12.259	8.035	40.22	0.332
08-11-2009 11:36:51	12.144	7.638	-0.593	38.28	6.062	12.246	7.965	37.00	0.687
08-11-2009 11:37:51	11.853	7.867	0.199	41.49	9.587	11.909	8.140	35.96	0.520
08-11-2009 11:38:51	11.848	7.931	0.107	50.92	6.668	12.170	8.072	37.32	0.530
08-11-2009 11:39:50	11.992	7.835	0.074	43.62	7.413	12.241	8.057	40.84	0.443
08-11-2009 11:40:50	12.078	7.757	0.172	39.04	8.661	12.146	8.029	39.62	0.695
08-11-2009 11:41:51	11.820	7.890	0.021	42.78	7.798	11.730	8.141	43.27	0.747
08-11-2009 11:42:51	11.154	8.547	0.129	66.77	7.247	11.350	8.377	40.32	0.637
08-11-2009 11:43:51	11.611	8.154	0.161	72.89	5.480	12.509	8.041	31.12	0.672
08-11-2009 11:44:51	12.471	7.437	0.129	37.00	5.339	12.821	7.848	32.39	0.998
08-11-2009 11:45:51	12.697	7.214	-0.021	29.41	9.276	12.684	7.832	33.85	1.023
08-11-2009 11:46:51	12.418	7.427	0.021	34.07	12.887	12.707	7.901	36.21	1.021
Run Averages	O2-S	CO2-S	SO2-S	NOx-S	CO-S	O2-In	CO2-In	SO2-In	THC-S
	%	%	ppm	ppm	ppm	%	%	ppm	ppm
08-11-2009 11:46:51	11.825	7.977	-0.291	57.79	7.287	12.030	8.108	39.97	0.458

Operator: Bill Harris
Plant Name: Huntington RRF
Location: Unit 3 Inlet and Outlet
Test Run 3 End

Final System Bias Check for Run 3 . STRATA Version 3.2

Operator:	Bill Harris
Plant Name:	Huntington RRF
Location:	Unit 3 Inlet and Outlet

Reference Cylinder Numbers

	Zero	Span
O2-S		XC033526B
CO2-S		XC033526B
SO2-S		CC41281
NOx-S		CC21496
CO-S		SG9113307BAL
O2-In		XC033526B
CO2-In		XC033526B
SO2-In		CC129649
THC-S		XC011445B

Date/Time	8/11/2009	11:58:35 PASSED							
Analyte	O2-S	CO2-S	SO2-S	NOx-S	CO-S	O2-In	CO2-In	SO2-In	THC-S
Units	%	%	ppm	ppm	ppm	%	%	ppm	ppm
Zero Ref Cyl	0	0	0	0	0	0	0	0	0
Zero Cal	0.02	0.181	0.254	2.63	0.314	-0.001	-0.035	0.46	0.054
Zero Avg	0.029	0.257	0.762	-0.29	-0.662	0.452	-0.033	0.46	0.281
Zero Bias%	0	0.4	0.6	0.6	1.1	2.1	0	0	0.8
Zero Drift%	0	0.2	-2.6	0	-0.9	0.1	-0.3	0	0.4
Span Ref Cyl	9.934	8.87	46.4	241.1	45.07	9.934	8.87	236.9	10.44
Span Cal	9.933	9.094	46.694	241.14	45.613	9.946	8.96	237.47	10.426
Span Avg	9.823	9.113	44.063	222.77	42.9	10.197	8.554	230.08	9.671
Span Bias%	0.5	0.1	2.9	3.8	3	1.1	2.3	1.5	2.5
Span Drift%	-0.2	-0.1	-0.2	0.7	-0.8	0.3	-0.6	2.5	-1.4
Ini Zero Avg	0.027	0.225	3.116	-0.45	0.175	0.422	0.013	0.69	0.166
Ini Span Avg	9.869	9.14	44.201	219.49	43.599	10.14	8.662	217.89	10.1
Run Avg	11.825	7.977	-0.291	57.79	7.287	12.03	8.108	39.97	0.458
Co	0.028	0.241	1.94	-0.37	-0.244	0.437	-0.01	0.57	0.223
Cm	9.846	9.127	44.13	221.13	43.25	10.169	8.608	223.98	9.885
Correct Avg	11.936	7.722	-2.452	63.310	7.804	11.834	8.355	41.770	0.254

Test Run 4 STRATA Version 3.2

	O2-S	CO2-S	SO2-S	NOx-S	CO-S	O2-In	CO2-In	SO2-In	THC-S
	%	%	ppm	ppm	ppm	%	%	ppm	ppm
Begin calculating run averages									
08-11-2009 12:00:44	12.736	7.333	2.010	55.84	9.908	12.758	7.849	32.45	0.212
08-11-2009 12:01:44	12.580	7.431	1.190	50.21	16.880	12.101	7.970	36.21	0.290
08-11-2009 12:02:44	11.627	8.274	0.878	59.47	18.217	11.474	8.299	39.43	0.278
08-11-2009 12:03:44	11.589	8.345	0.668	73.62	11.172	11.862	8.195	38.53	0.552
08-11-2009 12:04:44	12.036	7.926	0.452	69.19	10.035	12.627	8.015	34.50	0.632
08-11-2009 12:05:44	12.527	7.488	0.393	54.96	17.293	12.327	7.950	35.55	0.832
08-11-2009 12:06:43	12.254	7.668	0.413	56.04	17.700	12.280	8.025	39.47	0.891
08-11-2009 12:07:43	12.395	7.596	0.285	56.68	14.716	12.828	7.911	37.64	0.560
08-11-2009 12:08:44	12.540	7.445	0.258	49.97	18.124	12.396	7.938	39.99	0.571
08-11-2009 12:09:44	11.883	8.029	0.172	54.31	19.951	11.908	8.215	42.20	0.571
08-11-2009 12:10:44	11.880	8.061	0.221	60.17	17.505	12.145	8.125	39.39	0.376
08-11-2009 12:11:44	12.009	7.932	0.247	50.59	16.689	12.164	8.095	37.85	0.380
08-11-2009 12:12:44	12.178	7.783	0.091	45.10	16.169	12.590	7.998	35.13	0.230
08-11-2009 12:13:44	12.127	7.811	0.156	41.84	20.840	11.681	8.156	41.77	0.146
08-11-2009 12:14:44	11.317	8.520	0.145	48.94	18.342	11.581	8.337	39.74	0.140
08-11-2009 12:15:44	11.320	8.494	0.048	54.34	15.349	11.426	8.354	37.17	0.125
08-11-2009 12:16:44	11.564	8.277	0.021	64.84	11.808	11.986	8.170	33.14	0.208
08-11-2009 12:17:44	11.571	8.224	0.043	63.65	10.968	11.665	8.252	32.35	0.224
08-11-2009 12:18:44	11.414	8.375	0.011	66.36	11.302	11.774	8.287	32.55	0.127
08-11-2009 12:19:44	11.809	8.048	0.064	67.98	9.893	11.993	8.120	29.12	0.240
08-11-2009 12:20:44	11.647	8.136	0.021	68.30	10.131	11.748	8.219	29.12	0.390
08-11-2009 12:21:44	11.378	8.380	-0.038	73.78	10.895	11.350	8.323	29.55	0.258
08-11-2009 12:22:44	11.047	8.658	-0.048	91.81	8.255	11.235	8.384	28.55	0.180
08-11-2009 12:23:44	10.980	8.694	-0.199	85.21	8.052	11.481	8.355	25.86	-0.092
Run Averages	O2-S	CO2-S	SO2-S	NOx-S	CO-S	O2-In	CO2-In	SO2-In	THC-S
	%	%	ppm	ppm	ppm	%	%	ppm	ppm
08-11-2009 12:23:44	11.851	8.038	0.314	60.97	14.169	11.974	8.147	35.30	0.346

Operator: Bill Harris
Plant Name: Huntington RRF
Location: Unit 3 Inlet and Outlet
Test Run 4 End

Final System Bias Check for Run 4 . STRATA Version 3.2

Operator:	Bill Harris
Plant Name:	Huntington RRF
Location:	Unit 3 Inlet and Outlet

Reference Cylinder Numbers

	Zero	Span
O2-S		XC033526B
CO2-S		XC033526B
SO2-S		CC41281
NOx-S		CC21496
CO-S		SG9113307BAL
O2-In		XC033526B
CO2-In		XC033526B
SO2-In		CC129649
THC-S		XC011445B

Date/Time	8/11/2009	12:35:28 PASSED							
Analyte	O2-S	CO2-S	SO2-S	NOx-S	CO-S	O2-In	CO2-In	SO2-In	THC-S
Units	%	%	ppm	ppm	ppm	%	%	ppm	ppm
Zero Ref Cyl	0	0	0	0	0	0	0	0	0
Zero Cal	0.02	0.181	0.254	2.63	0.314	-0.001	-0.035	0.46	0.054
Zero Avg	0.029	0.265	0.946	-0.28	-0.788	0.403	-0.035	-0.22	0.275
Zero Bias%	0	0.5	0.8	0.6	1.2	1.8	0	0.1	0.7
Zero Drift%	0	0	0.2	0	-0.1	-0.2	0	-0.1	0
Span Ref Cyl	9.934	8.87	46.4	241.1	45.07	9.934	8.87	236.9	10.44
Span Cal	9.933	9.094	46.694	241.14	45.613	9.946	8.96	237.47	10.426
Span Avg	9.864	9.172	43.647	222.45	41.698	10.182	8.623	228.6	10.276
Span Bias%	0.3	0.4	3.3	3.9	4.4	1.1	1.9	1.8	0.5
Span Drift%	0.2	0.3	-0.5	-0.1	-1.3	-0.1	0.4	-0.3	2
Ini Zero Avg	0.029	0.257	0.762	-0.29	-0.662	0.452	-0.033	0.46	0.281
Ini Span Avg	9.823	9.113	44.063	222.77	42.9	10.197	8.554	230.08	9.671
Run Avg	11.851	8.038	0.314	60.97	14.169	11.974	8.147	35.3	0.346
Co	0.029	0.261	0.85	-0.29	-0.725	0.428	-0.034	0.12	0.278
Cm	9.843	9.143	43.86	222.61	42.299	10.19	8.588	229.34	9.973
Correct Avg	11.966	7.767	-0.583	66.260	15.603	11.750	8.416	36.360	0.073

Test Run 5 STRATA Version 3.2

	O2-S	CO2-S	SO2-S	NOx-S	CO-S	O2-In	CO2-In	SO2-In	THC-S
	%	%	ppm	ppm	ppm	%	%	ppm	ppm
Begin calculating run averages									
08-11-2009 12:38:26	12.062	7.766	1.136	57.65	11.186	12.015	8.044	39.77	0.709
08-11-2009 12:39:26	12.031	7.816	0.754	65.72	10.874	12.166	8.029	37.66	0.763
08-11-2009 12:40:25	12.029	7.784	0.523	60.24	10.185	11.935	8.074	36.75	0.845
08-11-2009 12:41:25	11.709	8.049	0.323	64.42	9.253	11.878	8.173	37.38	1.899
08-11-2009 12:42:25	12.167	7.706	0.226	64.05	10.795	12.361	7.941	32.83	4.367*
08-11-2009 12:43:25	12.226	7.616	0.285	49.16	14.278	11.967	8.008	32.56	0.736
08-11-2009 12:44:25	11.021	8.799	0.296	77.17	16.554	10.947	8.499	36.54	1.654
08-11-2009 12:45:25	11.043	8.740	0.361	123.41	7.651	11.970	8.272	29.41	2.075
08-11-2009 12:46:25	12.260	7.629	0.156	84.82	4.520	12.946	7.876	27.52	2.242
08-11-2009 12:47:25	12.789	7.195	-0.005	45.46	8.596	12.799	7.812	28.71	2.462
08-11-2009 12:48:25	12.562	7.392	0.134	42.33	13.935	12.800	7.901	30.21	2.685
08-11-2009 12:49:25	12.739	7.298	-0.086	41.03	13.582	12.773	7.852	30.08	2.545
08-11-2009 12:50:25	12.395	7.559	-0.113	41.29	17.754	12.290	8.012	33.56	2.696
08-11-2009 12:51:25	12.130	7.831	-0.048	44.86	19.089	12.275	8.058	35.33	0.758
08-11-2009 12:52:25	12.018	7.934	-0.070	41.18	20.374	12.154	8.112	33.21	0.650
08-11-2009 12:53:25	12.057	7.914	-0.204	41.38	18.085	12.774	8.046	32.10	0.709
08-11-2009 12:54:25	13.020	7.123	-0.091	35.92	16.480	13.312	7.635	27.08	1.030
08-11-2009 12:55:25	13.165	6.995	-0.161	36.60	21.273	13.007	7.685	28.56	1.026
08-11-2009 12:56:25	12.029	8.086	-0.145	37.28	29.161	10.347	8.459	37.06	0.179
08-11-2009 12:57:25	9.461	10.337	-0.043	84.16	26.725	10.473	9.179	45.24	0.023
08-11-2009 12:58:25	11.244	8.613	-0.210	86.55	9.087	12.696	8.127	29.28	-0.136
08-11-2009 12:59:25	12.824	7.253	-0.269	45.47	9.286	13.165	7.744	25.69	-0.354
08-11-2009 13:00:25	13.090	7.032	-0.296	40.56	18.747	12.931	7.678	24.82	-0.102
08-11-2009 13:01:25	12.186	7.838	-0.113	42.06	23.722	11.141	8.235	33.09	-0.334
Run Averages	O2-S	CO2-S	SO2-S	NOx-S	CO-S	O2-In	CO2-In	SO2-In	THC-S
	%	%	ppm	ppm	ppm	%	%	ppm	ppm
08-11-2009 13:01:25	12.094	7.846	0.098	56.36	15.050	12.213	8.060	32.69	1.213*

Operator: Bill Harris
Plant Name: Huntington RRF
Location: Unit 3 Inlet and Outlet
Test Run 5 End

Final System Bias Check for Run 5 . STRATA Version 3.2

Operator: Bill Harris
Plant Name: Huntington RRF
Location: Unit 3 Inlet and Outlet

	Reference Cylinder Numbers	
	Zero	Span
O2-S		XC033526B
CO2-S		XC033526B
SO2-S		CC41281
NOx-S		CC21496
CO-S		SG9113307BAL
O2-In		XC033526B
CO2-In		XC033526B
SO2-In		CC129649
THC-S		XC011445B

Date/Time 8/11/2009 13:14:16 PASSED

Analyte	O2-S	CO2-S	SO2-S	NOx-S	CO-S	O2-In	CO2-In	SO2-In	THC-S
Units	%	%	ppm	ppm	ppm	%	%	ppm	ppm
Zero Ref Cyl	0	0	0	0	0	0	0	0	0
Zero Cal	0.02	0.181	0.254	2.63	0.314	-0.001	-0.035	0.46	0.054
Zero Avg	0.036	0.249	0.485	-0.32	-0.663	0.436	-0.038	-0.88	0.161
Zero Bias%	0.1	0.4	0.3	0.6	1.1	2	0	0.3	0.4
Zero Drift%	0	-0.1	-0.5	0	0.1	0.2	0	-0.1	-0.4
Span Ref Cyl	9.934	8.87	46.4	241.1	45.07	9.934	8.87	236.9	10.44
Span Cal	9.933	9.094	46.694	241.14	45.613	9.946	8.96	237.47	10.426
Span Avg	9.877	9.13	43.462	221.54	42.298	10.199	8.676	227.96	10.463
Span Bias%	0.3	0.2	3.5	4.1	3.7	1.2	1.6	1.9	0.1
Span Drift%	0.1	-0.2	-0.2	-0.2	0.7	0.1	0.3	-0.1	0.6
Ini Zero Avg	0.029	0.265	0.946	-0.28	-0.788	0.403	-0.035	-0.22	0.275
Ini Span Avg	9.864	9.172	43.647	222.45	41.698	10.182	8.623	228.6	10.276
Run Avg	12.094	7.846	0.098	56.36	15.05	12.213	8.06	32.69	1.213
Co	0.032	0.257	0.72	-0.3	-0.726	0.42	-0.037	-0.55	0.218
Cm	9.87	9.151	43.55	221.99	41.998	10.191	8.65	228.28	10.369
Correct Avg	12.179	7.568	-0.669	61.460	16.642	11.990	8.268	34.410	1.024

Test Run 6 STRATA Version 3.2

	O2-S	CO2-S	SO2-S	NOx-S	CO-S	O2-In	CO2-In	SO2-In	THC-S
	%	%	ppm	ppm	ppm	%	%	ppm	ppm
Begin calculating run averages									
08-11-2009 13:17:04	12.180	7.759	0.940	52.90	12.036	11.797	8.112	24.64	0.586
08-11-2009 13:18:03	11.895	8.070	0.671	68.13	15.185	12.106	8.114	23.28	0.842
08-11-2009 13:19:03	11.973	7.967	0.280	59.90	12.431	11.796	8.144	29.70	1.192
08-11-2009 13:20:03	11.767	8.150	0.210	65.65	12.290	11.939	8.187	32.41	0.825
08-11-2009 13:21:03	11.941	8.061	0.134	59.55	16.402	11.538	8.185	33.61	0.253
08-11-2009 13:22:03	11.230	8.731	-0.021	76.00	24.676	11.426	8.413	39.32	0.187
08-11-2009 13:23:03	11.150	8.789	0.027	87.49	15.786	11.281	8.445	42.05	0.271
08-11-2009 13:24:03	11.338	8.613	0.016	93.40	12.754	11.972	8.274	38.41	0.314
08-11-2009 13:25:03	11.847	8.109	-0.043	62.59	11.037	11.922	8.179	45.18	0.397
08-11-2009 13:26:03	11.939	8.028	0.054	63.57	11.230	12.317	8.100	47.68	0.483
08-11-2009 13:27:03	12.148	7.846	-0.102	51.28	11.979	12.216	8.102	47.16	0.672
08-11-2009 13:28:03	12.032	7.929	-0.156	52.09	11.439	11.800	8.176	48.19	0.906
08-11-2009 13:29:03	11.527	8.454	-0.113	66.90	12.953	11.931	8.291	50.51	0.793
08-11-2009 13:30:03	12.082	7.938	-0.129	54.57	10.189	12.337	8.058	44.94	0.773
08-11-2009 13:31:03	11.872	8.115	-0.145	47.64	12.940	11.427	8.279	44.63	0.356
08-11-2009 13:32:03	11.118	8.853	-0.242	83.88	11.143	11.807	8.425	43.33	0.119
08-11-2009 13:33:03	12.159	7.852	-0.172	65.42	6.617	12.595	7.996	39.89	0.061
08-11-2009 13:34:03	12.293	7.690	-0.355	40.47	8.517	12.210	8.076	42.48	0.142
08-11-2009 13:35:03	12.073	7.914	-0.247	42.25	13.538	12.091	8.119	40.95	0.071
08-11-2009 13:36:03	11.942	8.051	-0.210	46.64	14.195	12.300	8.139	39.90	-0.008
08-11-2009 13:37:03	12.301	7.768	-0.215	35.44	12.404	12.588	8.014	37.64	-0.316
08-11-2009 13:38:03	12.416	7.639	-0.291	27.36	18.644	12.206	8.046	40.14	0.409
08-11-2009 13:39:03	12.000	7.953	-0.247	30.97	19.115	11.973	8.167	41.40	0.781
08-11-2009 13:40:03	11.853	8.124	-0.210	44.36	21.362	12.217	8.170	37.73	0.479
Run Averages	O2-S	CO2-S	SO2-S	NOx-S	CO-S	O2-In	CO2-In	SO2-In	THC-S
	%	%	ppm	ppm	ppm	%	%	ppm	ppm
08-11-2009 13:40:03	11.878	8.100	-0.023	57.43	13.700	11.991	8.176	39.80	0.441

Operator: Bill Harris
Plant Name: Huntington RRF
Location: Unit 3 Inlet and Outlet
Test Run 6 End

Final System Bias Check for Run 6 . STRATA Version 3.2

Operator:		Bill Harris
Plant Name:		Huntington RRF
Location:		Unit 3 Inlet and Outlet
	Reference Cylinder Numbers	
	Zero	Span
O2-S		XC033526B
CO2-S		XC033526B
SO2-S		CC41281
NOx-S		CC21496
CO-S		SG9113307BAL
O2-In		XC033526B
CO2-In		XC033526B
SO2-In		CC129649
THC-S		XC011445B

Date/Time	8/11/2009	13:49:22 PASSED							
Analyte	O2-S	CO2-S	SO2-S	NOx-S	CO-S	O2-In	CO2-In	SO2-In	THC-S
Units	%	%	ppm	ppm	ppm	%	%	ppm	ppm
Zero Ref Cyl	0	0	0	0	0	0	0	0	0
Zero Cal	0.02	0.181	0.254	2.63	0.314	-0.001	-0.035	0.46	0.054
Zero Avg	0.036	0.232	0.069	-0.31	-0.065	0.383	-0.036	-0.69	0.364
Zero Bias%	0.1	0.3	0.2	0.6	0.4	1.8	0	0.2	1
Zero Drift%	0	-0.1	-0.5	0	0.7	-0.2	0	0	0.7
Span Ref Cyl	9.934	8.87	46.4	241.1	45.07	9.934	8.87	236.9	10.44
Span Cal	9.933	9.094	46.694	241.14	45.613	9.946	8.96	237.47	10.426
Span Avg	9.884	9.146	43.97	221.31	42.742	10.142	8.632	227.87	10.43
Span Bias%	0.2	0.3	3	4.1	3.2	0.9	1.8	2	0.0
Span Drift%	0	0.1	0.6	0	0.5	-0.3	-0.2	0	-0.1
Ini Zero Avg	0.036	0.249	0.485	-0.32	-0.663	0.436	-0.038	-0.88	0.161
Ini Span Avg	9.877	9.13	43.462	221.54	42.298	10.199	8.676	227.96	10.463
Run Avg	11.878	8.1	-0.023	57.43	13.7	11.991	8.176	39.8	0.441
Co	0.036	0.24	0.28	-0.32	-0.364	0.409	-0.037	-0.79	0.263
Cm	9.881	9.138	43.72	221.42	42.52	10.171	8.654	227.92	10.45
Correct Avg	11.950	7.835	-0.320	62.780	14.781	11.786	8.381	42.040	0.183

Test Run 7 STRATA Version 3.2

	O2-S %	CO2-S %	SO2-S ppm	NOx-S ppm	CO-S ppm	O2-In %	CO2-In %	SO2-In ppm	THC-S ppm
Begin calculating run averages									
08-11-2009 13:52:25	12.166	7.822	1.364	41.11	16.559	11.874	8.113	30.61	0.503
08-11-2009 13:53:25	11.799	8.176	0.846	45.68	19.945	11.711	8.236	29.70	0.574
08-11-2009 13:54:24	11.393	8.568	0.528	49.76	19.103	11.233	8.419	32.47	0.602
08-11-2009 13:55:24	11.436	8.570	0.581	53.80	17.262	11.342	8.348	29.31	0.559
08-11-2009 13:56:24	11.276	8.698	0.274	52.48	16.901	11.186	8.422	28.66	0.498
08-11-2009 13:57:24	11.166	8.803	0.145	56.60	17.203	11.495	8.417	29.77	0.331
08-11-2009 13:58:24	11.245	8.683	0.226	66.86	11.254	11.506	8.396	30.58	0.252
08-11-2009 13:59:24	11.325	8.660	0.210	73.91	11.654	10.989	8.439	36.32	0.209
08-11-2009 14:00:24	10.661	9.269	0.097	67.94	15.201	11.240	8.580	38.53	0.160
08-11-2009 14:01:24	11.123	8.806	0.075	66.90	6.726	11.134	8.457	34.35	0.179
08-11-2009 14:02:24	11.086	8.845	0.097	77.14	8.925	11.448	8.424	28.77	0.210
08-11-2009 14:03:24	11.278	8.674	0.021	61.95	11.418	11.491	8.368	25.53	0.298
08-11-2009 14:04:24	11.154	8.762	-0.107	61.16	12.537	11.142	8.480	24.50	0.643
08-11-2009 14:05:24	11.211	8.731	-0.086	73.15	10.901	11.818	8.335	21.96	0.570
08-11-2009 14:06:24	11.659	8.272	-0.113	66.50	9.059	11.750	8.243	23.07	0.498
08-11-2009 14:07:24	11.463	8.403	-0.102	70.13	9.824	11.579	8.328	24.49	0.573
08-11-2009 14:08:24	11.485	8.441	-0.134	71.26	11.428	11.604	8.313	23.15	0.623
08-11-2009 14:09:24	11.306	8.568	-0.129	68.45	16.665	11.312	8.409	23.73	0.467
08-11-2009 14:10:24	11.066	8.777	-0.064	72.51	15.281	11.320	8.437	24.50	0.348
08-11-2009 14:11:24	11.195	8.689	-0.172	70.99	10.726	11.430	8.373	24.43	0.677
08-11-2009 14:12:24	11.479	8.407	-0.215	69.48	11.670	11.888	8.243	22.66	0.804
08-11-2009 14:13:24	11.457	8.397	-0.274	53.31	13.388	11.160	8.379	24.24	0.536
08-11-2009 14:14:24	11.098	8.752	-0.285	65.07	15.064	11.512	8.376	22.46	0.107
08-11-2009 14:15:24	11.400	8.474	-0.247	58.47	9.240	11.775	8.270	20.38	0.202
Run Averages	O2-S %	CO2-S %	SO2-S ppm	NOx-S ppm	CO-S ppm	O2-In %	CO2-In %	SO2-In ppm	THC-S ppm
08-11-2009 14:15:24	11.331	8.593	0.106	63.10	13.245	11.456	8.367	27.25	0.434

Operator: Bill Harris
Plant Name: Huntington RRF
Location: Unit 3 Inlet and Outlet
Test Run 7 End

Final System Bias Check for Run 7 . STRATA Version 3.2

Operator:		Bill Harris
Plant Name:		Huntington RRF
Location:		Unit 3 Inlet and Outlet
	Reference Cylinder Numbers	
	Zero	Span
O2-S		XC033526B
CO2-S		XC033526B
SO2-S		CC41281
NOx-S		CC21496
CO-S		SG9113307BAL
O2-In		XC033526B
CO2-In		XC033526B
SO2-In		CC129649
THC-S		XC011445B

Date/Time	8/11/2009	14:25:21 PASSED							
Analyte	O2-S	CO2-S	SO2-S	NOx-S	CO-S	O2-In	CO2-In	SO2-In	THC-S
Units	%	%	ppm	ppm	ppm	%	%	ppm	ppm
Zero Ref Cyl	0	0	0	0	0	0	0	0	0
Zero Cal	0.02	0.181	0.254	2.63	0.314	-0.001	-0.035	0.46	0.054
Zero Avg	0.031	0.244	0.946	-0.3	-0.761	0.378	-0.038	-1.21	-0.159
Zero Bias%	0.1	0.4	0.8	0.6	1.2	1.7	0	0.3	0.7
Zero Drift%	0	0.1	1	0	-0.8	0	0	-0.1	-1.7
Span Ref Cyl	9.934	8.87	46.4	241.1	45.07	9.934	8.87	236.9	10.44
Span Cal	9.933	9.094	46.694	241.14	45.613	9.946	8.96	237.47	10.426
Span Avg	9.892	9.152	42.77	221.26	42.744	10.133	8.683	226.48	10.42
Span Bias%	0.2	0.3	4.3	4.1	3.2	0.9	1.6	2.2	0.0
Span Drift%	0	0	-1.3	0	0	0	0.3	-0.3	0.0
Ini Zero Avg	0.036	0.232	0.069	-0.31	-0.065	0.383	-0.036	-0.69	0.364
Ini Span Avg	9.884	9.146	43.97	221.31	42.742	10.142	8.632	227.87	10.43
Run Avg	11.331	8.593	0.106	63.1	13.245	11.456	8.367	27.25	0.434
Co	0.033	0.238	0.51	-0.3	-0.413	0.38	-0.037	-0.95	0.103
Cm	9.888	9.149	43.37	221.28	42.743	10.138	8.658	227.18	10.43
Correct Avg	11.389	8.317	-0.435	68.990	14.264	11.276	8.573	29.290	0.335

Test Run 8 STRATA Version 3.2

	O2-S	CO2-S	SO2-S	NOx-S	CO-S	O2-In	CO2-In	SO2-In	THC-S
	%	%	ppm	ppm	ppm	%	%	ppm	ppm
Begin calculating run averages									
08-11-2009 14:28:10	12.121	7.730	1.583	49.03	13.952	12.138	8.067	20.55	0.410
08-11-2009 14:29:10	12.325	7.621	0.889	47.56	13.770	12.166	8.003	22.27	0.364
08-11-2009 14:30:10	11.798	8.087	0.544	43.30	17.803	11.561	8.262	27.27	0.183
08-11-2009 14:31:10	11.561	8.302	0.291	58.15	15.768	11.572	8.279	26.08	0.135
08-11-2009 14:32:10	11.739	8.189	0.264	56.67	13.581	11.778	8.188	25.63	0.316
08-11-2009 14:33:10	11.742	8.120	0.124	49.61	12.716	11.848	8.204	25.70	0.294
08-11-2009 14:34:10	11.737	8.124	0.177	47.44	13.435	11.928	8.199	25.18	0.095
08-11-2009 14:35:10	11.716	8.137	0.000	50.76	13.120	11.842	8.231	23.79	0.233
08-11-2009 14:36:10	11.581	8.225	-0.118	54.85	14.125	11.656	8.260	22.57	0.031
08-11-2009 14:37:10	11.591	8.260	-0.016	60.16	11.001	11.963	8.199	21.85	0.323
08-11-2009 14:38:10	11.705	8.109	-0.253	52.73	10.177	11.810	8.212	22.15	0.758
08-11-2009 14:39:10	11.806	8.070	-0.237	47.38	13.510	12.140	8.161	20.72	0.877
08-11-2009 14:40:10	11.922	7.936	-0.151	43.93	13.114	11.875	8.165	21.01	0.540
08-11-2009 14:41:10	11.813	8.052	-0.140	48.61	11.770	12.086	8.155	19.36	0.247
08-11-2009 14:42:10	11.736	8.090	-0.194	45.36	13.781	11.714	8.244	18.52	0.137
08-11-2009 14:43:10	11.710	8.165	-0.264	51.09	14.303	11.913	8.208	17.32	0.046
08-11-2009 14:44:10	11.675	8.142	-0.269	51.63	13.398	11.942	8.236	16.91	0.116
08-11-2009 14:45:10	11.978	7.925	-0.334	43.17	13.173	12.042	8.109	16.90	-0.229
08-11-2009 14:46:10	11.566	8.221	-0.253	45.72	12.448	11.470	8.310	21.02	-0.326
08-11-2009 14:47:10	11.344	8.435	-0.253	55.87	12.543	11.709	8.300	26.77	0.016
08-11-2009 14:48:10	11.640	8.200	-0.366	55.39	10.700	11.884	8.194	28.78	0.049
08-11-2009 14:49:10	11.722	8.109	-0.344	52.21	11.739	11.532	8.231	31.23	-0.006
08-11-2009 14:50:10	11.062	8.712	-0.215	59.79	17.764	11.293	8.431	28.78	0.486
08-11-2009 14:51:10	11.107	8.729	-0.328	71.04	12.902	11.433	8.412	29.78	0.328
Run Averages	O2-S	CO2-S	SO2-S	NOx-S	CO-S	O2-In	CO2-In	SO2-In	THC-S
	%	%	ppm	ppm	ppm	%	%	ppm	ppm
08-11-2009 14:51:10	11.696	8.154	0.006	51.73	13.358	11.804	8.219	23.34	0.226

Operator: Bill Harris
Plant Name: Huntington RRF
Location: Unit 3 Inlet and Outlet
Test Run 8 End

Final System Bias Check for Run 8 . STRATA Version 3.2

Operator:		Bill Harris
Plant Name:		Huntington RRF
Location:		Unit 3 Inlet and Outlet
	Reference Cylinder Numbers	
	Zero	Span
O2-S		XC033526B
CO2-S		XC033526B
SO2-S		CC41281
NOx-S		CC21496
CO-S		SG9113307BAL
O2-In		XC033526B
CO2-In		XC033526B
SO2-In		CC129649
THC-S		XC011445B

Date/Time	8/11/2009	15:00:30 PASSED							
Analyte	O2-S	CO2-S	SO2-S	NOx-S	CO-S	O2-In	CO2-In	SO2-In	THC-S
Units	%	%	ppm	ppm	ppm	%	%	ppm	ppm
Zero Ref Cyl	0	0	0	0	0	0	0	0	0
Zero Cal	0.02	0.181	0.254	2.63	0.314	-0.001	-0.035	0.46	0.054
Zero Avg	0.028	0.225	0.439	-0.28	-0.492	0.373	-0.038	-0.84	0.2
Zero Bias%	0	0.2	0.2	0.6	0.9	1.7	0	0.3	0.5
Zero Drift%	0	-0.1	-0.6	0	0.3	0	0	0.1	1.2
Span Ref Cyl	9.934	8.87	46.4	241.1	45.07	9.934	8.87	236.9	10.44
Span Cal	9.933	9.094	46.694	241.14	45.613	9.946	8.96	237.47	10.426
Span Avg	9.874	9.114	43.647	219.89	42.299	10.116	8.653	227.14	10.42
Span Bias%	0.3	0.1	3.3	4.4	3.7	0.8	1.7	2.1	0.0
Span Drift%	-0.1	-0.2	1	-0.3	-0.5	-0.1	-0.2	0.1	0.0
Ini Zero Avg	0.031	0.244	0.946	-0.3	-0.761	0.378	-0.038	-1.21	-0.159
Ini Span Avg	9.892	9.152	42.77	221.26	42.744	10.133	8.683	226.48	10.42
Run Avg	11.696	8.154	0.006	51.73	13.358	11.804	8.219	23.34	0.226
Co	0.029	0.235	0.69	-0.29	-0.626	0.376	-0.038	-1.02	0.02
Cm	9.883	9.133	43.21	220.58	42.522	10.125	8.668	226.81	10.42
Correct Avg	11.762	7.894	-0.749	56.780	14.607	11.645	8.413	25.330	0.206

Test Run 9 STRATA Version 3.2

	O2-S %	CO2-S %	SO2-S ppm	NOx-S ppm	CO-S ppm	O2-In %	CO2-In %	SO2-In ppm	THC-S ppm
Begin calculating run averages									
08-11-2009 15:02:39	11.549	8.213	2.535	57.32	9.644	11.426	8.274	29.06	0.305
08-11-2009 15:03:39	11.316	8.460	1.303	62.44	9.398	11.302	8.341	28.15	0.316
08-11-2009 15:04:39	11.529	8.327	0.695	68.41	9.404	11.672	8.219	24.93	0.282
08-11-2009 15:05:38	11.723	8.134	0.342	59.89	8.112	11.717	8.178	23.98	0.189
08-11-2009 15:06:38	11.713	8.104	0.264	58.25	8.686	11.464	8.216	24.14	0.347
08-11-2009 15:07:38	11.272	8.511	0.124	58.69	10.390	11.105	8.393	23.92	0.239
08-11-2009 15:08:38	11.147	8.633	0.064	73.55	6.177	11.760	8.317	23.98	-0.084
08-11-2009 15:09:38	11.755	8.056	-0.102	57.21	5.229	11.756	8.181	25.54	-0.219
08-11-2009 15:10:38	11.755	8.058	-0.108	52.67	7.036	12.160	8.126	23.90	-0.151
08-11-2009 15:11:38	12.109	7.766	-0.188	43.84	8.391	12.250	8.066	24.85	0.275
08-11-2009 15:12:38	12.048	7.786	-0.220	42.45	9.868	12.025	8.111	25.79	0.432
08-11-2009 15:13:38	12.105	7.785	-0.118	44.52	10.434	12.031	8.075	24.36	0.328
08-11-2009 15:14:38	11.247	8.575	-0.156	48.50	16.374	10.808	8.506	30.96	0.233
08-11-2009 15:15:38	11.025	8.776	-0.242	74.11	11.375	11.684	8.368	27.41	0.360
08-11-2009 15:16:38	11.698	8.138	-0.097	57.18	7.395	11.744	8.208	25.62	0.004
08-11-2009 15:17:38	11.763	8.063	-0.258	48.18	10.425	12.113	8.155	23.76	-0.217
08-11-2009 15:18:38	12.166	7.734	-0.194	44.36	9.846	12.229	8.035	23.20	-0.143
08-11-2009 15:19:38	11.932	7.892	-0.221	45.69	12.742	12.103	8.150	22.89	0.086
08-11-2009 15:20:38	12.219	7.705	-0.344	44.15	12.212	12.263	8.024	21.89	0.338
08-11-2009 15:21:38	11.823	8.042	-0.285	39.36	15.290	11.382	8.265	26.51	0.233
08-11-2009 15:22:38	10.988	8.795	-0.274	63.72	14.991	11.083	8.492	27.74	0.243
08-11-2009 15:23:38	10.935	8.880	-0.280	74.52	9.926	11.370	8.457	19.52	0.425
08-11-2009 15:24:38	11.353	8.530	-0.317	63.39	9.953	11.580	8.290	18.23	0.213
08-11-2009 15:25:38	11.445	8.392	-0.199	58.50	9.585	11.742	8.257	19.58	-0.142
Run Averages	O2-S %	CO2-S %	SO2-S ppm	NOx-S ppm	CO-S ppm	O2-In %	CO2-In %	SO2-In ppm	THC-S ppm
08-11-2009 15:25:38	11.609	8.223	0.073	55.87	10.121	11.698	8.238	24.58	0.162

Operator: Bill Harris
Plant Name: Huntington RRF
Location: Unit 3 Inlet and Outlet
Test Run 9 End

Final System Bias Check for Run 9 . STRATA Version 3.2

Operator:	Bill Harris
Plant Name:	Huntington RRF
Location:	Unit 3 Inlet and Outlet

Reference Cylinder Numbers

	Zero	Span
O2-S		XC033526B
CO2-S		XC033526B
SO2-S		CC41281
NOx-S		CC21496
CO-S		SG9113307BAL
O2-In		XC033526B
CO2-In		XC033526B
SO2-In		CC129649
THC-S		XC011445B

Date/Time	8/11/2009	15:37:20 PASSED							
Analyte	O2-S	CO2-S	SO2-S	NOx-S	CO-S	O2-In	CO2-In	SO2-In	THC-S
Units	%	%	ppm	ppm	ppm	%	%	ppm	ppm
Zero Ref Cyl	0	0	0	0	0	0	0	0	0
Zero Cal	0.02	0.181	0.254	2.63	0.314	-0.001	-0.035	0.46	0.054
Zero Avg	0.028	0.217	0.069	-0.32	-0.065	0.371	-0.037	-1.44	-0.119
Zero Bias%	0	0.2	0.2	0.6	0.4	1.7	0	0.4	0.6
Zero Drift%	0	0	-0.4	0	0.5	0	0	-0.1	-1.1
Span Ref Cyl	9.934	8.87	46.4	241.1	45.07	9.934	8.87	236.9	10.44
Span Cal	9.933	9.094	46.694	241.14	45.613	9.946	8.96	237.47	10.426
Span Avg	9.884	9.091	44.662	221.25	43.301	10.111	8.691	227.16	10.389
Span Bias%	0.2	0	2.2	4.1	2.6	0.8	1.5	2.1	-0.1
Span Drift%	0	-0.1	1.1	0.3	1.1	0	0.2	0	-0.1
Ini Zero Avg	0.028	0.225	0.439	-0.28	-0.492	0.373	-0.038	-0.84	0.200
Ini Span Avg	9.874	9.114	43.647	219.89	42.299	10.116	8.653	227.14	10.42
Run Avg	11.609	8.223	0.073	55.87	10.121	11.698	8.238	24.58	0.162
Co	0.028	0.221	0.25	-0.3	-0.279	0.372	-0.038	-1.14	0.04
Cm	9.879	9.103	44.15	220.57	42.8	10.113	8.672	227.15	10.4
Correct Avg	11.678	7.992	-0.191	61.310	10.881	11.550	8.428	26.690	0.122

Test Run 10 STRATA Version 3.2

	O2-S	CO2-S	SO2-S	NOx-S	CO-S	O2-In	CO2-In	SO2-In	THC-S
	%	%	ppm	ppm	ppm	%	%	ppm	ppm
Begin calculating run averages									
08-11-2009 15:47:26	12.236	7.601	0.182	47.27	11.331	12.073	8.031	33.44	0.309
08-11-2009 15:48:26	11.613	8.140	0.140	56.15	12.028	11.725	8.262	33.86	0.453
08-11-2009 15:49:26	11.784	8.043	0.113	65.97	10.527	12.190	8.116	32.61	0.318
08-11-2009 15:50:26	12.257	7.642	0.134	50.18	12.229	12.474	7.975	31.98	0.128
08-11-2009 15:51:26	12.071	7.738	0.075	47.12	14.498	11.913	8.120	34.54	0.218
08-11-2009 15:52:26	11.737	7.994	0.081	57.84	14.591	11.875	8.162	32.83	0.390
08-11-2009 15:53:26	11.393	8.319	0.043	60.66	15.140	11.441	8.334	30.78	0.415
08-11-2009 15:54:26	11.399	8.359	-0.021	68.07	14.622	11.765	8.229	27.65	0.094
08-11-2009 15:55:26	11.635	8.167	0.027	70.86	11.735	11.936	8.174	25.39	0.160
08-11-2009 15:56:26	11.560	8.175	-0.097	65.42	11.520	11.626	8.248	27.69	0.172
08-11-2009 15:57:26	11.570	8.197	0.070	73.59	9.926	12.055	8.162	25.46	-0.105
08-11-2009 15:58:26	12.137	7.719	0.145	59.50	10.632	12.364	8.000	23.26	-0.040
08-11-2009 15:59:26	11.547	8.206	0.022	53.87	13.332	11.258	8.333	29.07	0.046
08-11-2009 16:00:26	11.121	8.594	-0.038	66.64	11.306	11.647	8.311	28.62	-0.048
08-11-2009 16:01:26	11.589	8.168	-0.005	66.26	8.543	11.745	8.197	26.46	0.024
08-11-2009 16:02:26	11.423	8.298	-0.054	68.62	11.856	11.632	8.272	26.29	0.101
08-11-2009 16:03:26	11.555	8.214	-0.091	72.23	9.701	12.078	8.174	24.46	-0.190
08-11-2009 16:04:25	11.976	7.864	0.014	59.14	10.015	12.181	8.079	23.43	-0.149
08-11-2009 16:05:25	11.825	7.971	-0.129	55.51	12.336	11.614	8.198	24.08	0.020
08-11-2009 16:06:25	11.312	8.459	0.054	68.95	13.535	11.608	8.314	22.46	0.860
08-11-2009 16:07:25	11.436	8.365	-0.054	67.46	13.392	11.745	8.260	20.30	1.092
08-11-2009 16:08:25	11.378	8.345	-0.075	61.45	11.737	11.718	8.282	22.00	0.749
08-11-2009 16:09:25	11.698	8.120	-0.107	64.13	10.237	11.899	8.165	20.77	0.786
08-11-2009 16:10:25	11.699	8.080	-0.226	60.14	9.854	11.847	8.192	20.84	0.459
Run Averages	O2-S	CO2-S	SO2-S	NOx-S	CO-S	O2-In	CO2-In	SO2-In	THC-S
	%	%	ppm	ppm	ppm	%	%	ppm	ppm
08-11-2009 16:10:25	11.665	8.115	0.009	61.95	11.860	11.850	8.191	27.02	0.261

Operator: Bill Harris
Plant Name: Huntington RRF
Location: Unit 3 Inlet and Outlet
Test Run 10 End

Final System Bias Check for Run 10 . STRATA Version 3.2

Operator:	Bill Harris
Plant Name:	Huntington RRF
Location:	Unit 3 Inlet and Outlet

	Reference Cylinder Numbers	
	Zero	Span
O2-S		XC033526B
CO2-S		XC033526B
SO2-S		CC41281
NOx-S		CC21496
CO-S		SG9113307BAL
O2-In		XC033526B
CO2-In		XC033526B
SO2-In		CC129649
THC-S		XC011445B

Date/Time	8/11/2009	16:19:59 PASSED							
Analyte	O2-S	CO2-S	SO2-S	NOx-S	CO-S	O2-In	CO2-In	SO2-In	THC-S
Units	%	%	ppm	ppm	ppm	%	%	ppm	ppm
Zero Ref Cyl	0	0	0	0	0	0	0	0	0
Zero Cal	0.02	0.181	0.254	2.63	0.314	-0.001	-0.035	0.46	0.054
Zero Avg	0.03	0.208	0.254	-0.28	-0.277	0.391	-0.037	-1.04	0.571
Zero Bias%	0	0.2	0	0.6	0.7	1.8	0	0.3	1.7
Zero Drift%	0	-0.1	0.2	0	-0.2	0.1	0	0.1	2.3
Span Ref Cyl	9.934	8.87	46.4	241.1	45.07	9.934	8.87	236.9	10.44
Span Cal	9.933	9.094	46.694	241.14	45.613	9.946	8.96	237.47	10.426
Span Avg	9.877	9.088	44.478	222.22	43.324	10.105	8.687	226.78	10.369
Span Bias%	0.3	0	2.4	3.9	2.6	0.7	1.5	2.2	-0.2
Span Drift%	0	0	-0.2	0.2	0	0	0	-0.1	-0.1
Ini Zero Avg	0.028	0.217	0.069	-0.32	-0.065	0.371	-0.037	-1.44	-0.119
Ini Span Avg	9.884	9.091	44.662	221.25	43.301	10.111	8.691	227.16	10.389
Run Avg	11.665	8.115	0.009	61.95	11.86	11.85	8.191	27.02	0.261
Co	0.029	0.213	0.16	-0.3	-0.171	0.381	-0.037	-1.24	0.23
Cm	9.881	9.089	44.57	221.73	43.313	10.108	8.689	226.97	10.38
Correct Avg	11.733	7.897	-0.159	67.600	12.470	11.714	8.364	29.330	0.036

APPENDIX C

Source CEMS Data Printouts

O_2, CO_2, SO_2, NO_x, CO

R#1

Economizer Rata Report

COVANTA ENERGY

Company: Covanta Huntington, Inc.
Report Name: UNIT #1 ECON RATA

Start of Report: 08/13/2009 08:24
End of Report: 08/13/2009 08:47

Validation: Valid Data Only

	SO2e	CO2e	O2e
Group#-Channel#	G8-C6	G8-C2	G8-C1
Long Descrip.	U-1 SO2 E	U-1 CO2 E	U-1 O2 Ec
Short Descrip.	SO2e	CO2e	O2e
Units	ppm	%	%
Range	0-500	0-20	0-25
08/13/2009 08:24	74	7.0	13.1
08/13/2009 08:25	63	7.3	12.8
08/13/2009 08:26	56	7.3	12.7
08/13/2009 08:27	50	7.8	12.4
08/13/2009 08:28	54	9.2	10.7
08/13/2009 08:29	54	8.8	11.0
08/13/2009 08:30	49	8.4	11.5
08/13/2009 08:31	42	8.4	11.5
08/13/2009 08:32	42	8.9	10.9
08/13/2009 08:33	43	8.9	11.0
08/13/2009 08:34	41	9.1	10.6
08/13/2009 08:35	38	9.5	10.2
08/13/2009 08:36	42	9.8	9.7
08/13/2009 08:37	37	9.9	9.7
08/13/2009 08:38	37	10.0	9.6
08/13/2009 08:39	35	9.5	10.0
08/13/2009 08:40	32	9.1	10.5
08/13/2009 08:41	32	9.0	10.7
08/13/2009 08:42	31	8.3	11.4
08/13/2009 08:43	33	8.5	11.3
08/13/2009 08:44	36	8.9	10.8
08/13/2009 08:45	34	8.5	11.2
08/13/2009 08:46	34	8.0	11.7
08/13/2009 08:47	43	8.8	11.1
Raw Average =	43	8.7	11.0
O2 Corrected Avg. =	60		
Period % Recovery =	100.0	100.0	100.0

Date/Time Printed: 08/13/2009 08:50

Stack Rata Report

COVANTA ENERGY

Company: Covanta Huntington, Inc.
Report Name: UNIT #1 STACK RATA

Start of Report: 08/13/2009 08:24
End of Report: 08/13/2009 08:47

Validation: Valid Data Only

	NOxs	SO2S	COlow	COhigh	CO2	O2	Steam Flow
Group#-Channel#	G8-C10	G8-C9	G8-C3	G8-C4	G8-C8	G8-C7	G8-C19
Long Descrip.	U-1 NOx S	U-1 SO2 S	U-1 CO St	U-1 CO St	U-1 CO2 S	U-1 O2 St	U-1 Steam
Short Descrip.	NOxs	SO2s	COs LoRng	COs HiRng	CO2s	O2s	Steam
Units	ppm	ppm	ppm	ppm	%	%	K#/Hr
Range	0-500	0-200	0-200	0-2000	0-20	0-25	0-100
08/13/2009 08:24	53.5	0	46	48	6.2	14.13	75.0
08/13/2009 08:25	58.5	0	74	80	6.5	13.84	73.0
08/13/2009 08:26	59.5	0	61	64	6.6	13.80	72.0
08/13/2009 08:27	55.0	0	55	57	6.8	13.48	72.0
08/13/2009 08:28	41.3	0	80	86	8.0	11.95	73.0
08/13/2009 08:29	41.8	0	45	45	7.9	12.20	74.0
08/13/2009 08:30	55.0	0	34	33	7.5	12.64	74.0
08/13/2009 08:31	66.3	0	37	36	7.4	12.70	74.0
08/13/2009 08:32	64.5	0	34	33	7.8	12.20	75.0
08/13/2009 08:33	57.0	0	40	40	7.8	12.23	76.0
08/13/2009 08:34	63.3	0	31	30	8.1	11.93	76.0
08/13/2009 08:35	70.8	0	30	29	8.4	11.53	78.0
08/13/2009 08:36	80.5	0	20	20	8.7	11.11	80.0
08/13/2009 08:37	99.0	0	20	20	8.7	11.06	81.0
08/13/2009 08:38	109.3	0	19	19	8.8	10.98	82.0
08/13/2009 08:39	108.8	0	14	13	8.5	11.35	83.0
08/13/2009 08:40	81.3	0	12	11	8.1	11.88	84.0
08/13/2009 08:41	67.3	0	14	13	7.9	12.00	84.0
08/13/2009 08:42	56.3	0	14	13	7.4	12.65	83.0
08/13/2009 08:43	50.0	0	16	16	7.4	12.59	83.0
08/13/2009 08:44	64.3	0	20	20	7.9	12.11	83.0
08/13/2009 08:45	67.0	0	15	15	7.6	12.43	83.0
08/13/2009 08:46	46.5	0	15	15	7.2	12.94	82.0
08/13/2009 08:47	54.5	0	20	21	7.6	12.36	82.0
Raw Average =	65	0	31.9	32.3	7.7	12.3	78.4
O2 Corrected Avg. =	106	0	51	52			
Lbs./Hour Avg. =	24.61	0.00	7.30				
Period % Recovery =	100.0	100.0	100.0	100.0	100.0	100.0	100.0

Date/Time Printed: 08/13/2009 08:50

R#2

Economizer Rata Report

COVANTA ENERGY

Company: Covanta Huntington, Inc.
Report Name: UNIT #1 ECON RATA

Start of Report: 08/13/2009 09:00
End of Report: 08/13/2009 09:23 **Validation:** Valid Data Only

	SO2e		CO2e	O2e	
Group#-Channel#	G8-C6		G8-C2	G8-C1	
Long Descrip.	U-1 SO2 E		U-1 CO2 E	U-1 O2 Ec	
Short Descrip.	SO2e		CO2e	O2e	
Units	ppm		%	%	
Range	0-500		0-20	0-25	
08/13/2009 09:01			8.2		
08/13/2009 09:02	48	<	9.3	10.1	<
08/13/2009 09:03	44		8.9	10.9	
08/13/2009 09:04	42		9.0	10.8	
08/13/2009 09:05	39		8.8	11.0	
08/13/2009 09:06	36		9.0	10.7	
08/13/2009 09:07	36		9.6	10.1	
08/13/2009 09:08	39		9.8	9.7	
08/13/2009 09:09	37		10.1	9.5	
08/13/2009 09:10	35		10.1	9.5	
08/13/2009 09:11	32		9.5	10.0	
08/13/2009 09:12	30		9.7	10.1	
08/13/2009 09:13	31		10.5	9.0	
08/13/2009 09:14	30		9.6	9.9	
08/13/2009 09:15	24		8.3	11.5	
08/13/2009 09:16	23		8.4	11.4	
08/13/2009 09:17	24		9.2	10.6	
08/13/2009 09:18	25		10.1	9.6	
08/13/2009 09:19	24		8.5	11.2	
08/13/2009 09:20	22		8.1	11.9	
08/13/2009 09:21	26		10.0	9.9	
08/13/2009 09:22	30		9.8	9.8	
08/13/2009 09:23	25		8.0	11.7	
Raw Average =	31		9.2	10.4	
O2 Corrected Avg. =	42				
Period % Recovery =	95.7		100.0	95.7	

Date/Time Printed: 08/13/2009 09:27

R#2

Stack Rata Report

COVANTA ENERGY

Company: Covanta Huntington, Inc.
Report Name: UNIT #1 STACK RATA

Start of Report: 08/13/2009 09:00
End of Report: 08/13/2009 09:23

Validation: Valid Data Only

	NOxs		SO2S		COlow		COhigh		CO2		O2		Steam Flow
Group#-Channel#	G8-C10		G8-C9		G8-C3		G8-C4		G8-C8		G8-C7		G8-C19
Long Descrip.	U-1 NOx S		U-1 SO2 S		U-1 CO St		U-1 CO St		U-1 CO2 S		U-1 O2 St		U-1 Steam
Short Descrip.	NOxs		SO2s		COs LoRng		COs HiRng		CO2s		O2s		Steam
Units	ppm		ppm		ppm		ppm		%		%		K#/Hr
Range	0-500		0-200		0-200		0-2000		0-20		0-25		0-100
08/13/2009 09:00													
08/13/2009 09:01													
08/13/2009 09:02	51.5	<	0	<	32	<	31	<	8.4		11.51	<	80.0
08/13/2009 09:03	49.3		0		30		29		8.0		12.19		80.0
08/13/2009 09:04	53.0		0		21		22		8.0		12.10		79.0
08/13/2009 09:05	47.0		0		27		27		7.9		12.26		78.0
08/13/2009 09:06	57.0		0		28		27		8.0		12.03		78.0
08/13/2009 09:07	78.5		0		18		18		8.4		11.48		79.0
08/13/2009 09:08	94.0		0		15		15		8.8		11.14		80.0
08/13/2009 09:09	97.0		0		16		15		8.8		10.94		81.0
08/13/2009 09:10	88.8		0		18		18		8.9		10.94		82.0
08/13/2009 09:11	79.5		0		14		13		8.6		11.39		82.0
08/13/2009 09:12	71.8		0		17		16		8.5		11.40		83.0
08/13/2009 09:13	100.3		0		20		20		9.3		10.50		85.0
08/13/2009 09:14	89.0		0		12		11		8.7		11.25		84.0
08/13/2009 09:15	42.3		0		11		11		7.5		12.71		83.0
08/13/2009 09:16	37.5		0		13		13		7.5		12.64		83.0
08/13/2009 09:17	56.3		0		19		19		8.1		11.90		83.0
08/13/2009 09:18	98.0		0		19		19		8.9		11.01		84.0
08/13/2009 09:19	66.8		0		13		12		7.9		12.39		83.0
08/13/2009 09:20	32.5		0		16		16		7.2		13.08		83.0
08/13/2009 09:21	72.0		0		22		22		8.6		11.26		85.0
08/13/2009 09:22	93.5		0		17		17		9.0		11.15		85.0
08/13/2009 09:23	41.0		0		12		12		7.4		12.95		83.0
Raw Average =	68		0		18.6		18.3		8.2		11.7		81.8
O2 Corrected Avg. =	103		0		28		27						
Lbs./Hour Avg. =	24.94		0.00		4.15								
Period % Recovery =	95.7		95.7		95.7		95.7		100.0		95.7		100.0

Date/Time Printed: 08/13/2009 09:27

R+3

Economizer Rata Report

COVANTA ENERGY

Company: Covanta Huntington, Inc.
Report Name: UNIT #1 ECON RATA

Start of Report: 08/13/2009 09:37
End of Report: 08/13/2009 10:00

Validation: Valid Data Only

	SO2e	CO2e	O2e
Group#-Channel#	G8-C6	G8-C2	G8-C1
Long Descrip.	U-1 SO2 E	U-1 CO2 E	U-1 O2 Ec
Short Descrip.	SO2e	CO2e	O2e
Units	ppm	%	%
Range	0-500	0-20	0-25
08/13/2009 09:37	23	9.1	10.9
08/13/2009 09:38	27	10.2	9.6
08/13/2009 09:39	29	9.5	10.2
08/13/2009 09:40	26	8.3	11.6
08/13/2009 09:41	23	8.2	11.7
08/13/2009 09:42	24	8.4	11.8
08/13/2009 09:43	34	10.9	8.9
08/13/2009 09:44	37	9.4	10.3
08/13/2009 09:45	28	7.4	12.6
08/13/2009 09:46	22	7.1	13.1
08/13/2009 09:47	22	8.9	11.3
08/13/2009 09:48	28	10.6	9.4
08/13/2009 09:49	39	11.1	8.4
08/13/2009 09:50	34	9.9	9.8
08/13/2009 09:51	27	8.4	11.4
08/13/2009 09:52	23	7.4	12.7
08/13/2009 09:53	23	8.1	11.9
08/13/2009 09:54	25	8.3	11.7
08/13/2009 09:55	25	9.1	10.9
08/13/2009 09:56	32	10.0	10.1
08/13/2009 09:57	41	10.3	9.3
08/13/2009 09:58	42	8.4	11.4
08/13/2009 09:59	45	8.0	12.1
Raw Average =	29	9.0	10.9
O2 Corrected Avg. =	41		
Period % Recovery =	100.0	100.0	100.0

Date/Time Printed: 08/13/2009 10:02

R#3

Stack Rata Report

COVANTA ENERGY

Company: Covanta Huntington, Inc.
Report Name: UNIT #1 STACK RATA

Start of Report: 08/13/2009 09:37
End of Report: 08/13/2009 10:00

Validation: Valid Data Only

	NOxs	SO2S	COlow	COhigh	CO2	O2	Steam Flow
Group#-Channel#	G8-C10	G8-C9	G8-C3	G8-C4	G8-C8	G8-C7	G8-C19
Long Descrip.	U-1 NOx S	U-1 SO2 S	U-1 CO St	U-1 CO St	U-1 CO2 S	U-1 O2 St	U-1 Steam
Short Descrip.	NOxs	SO2s	COs LoRng	COs HiRng	CO2s	O2s	Steam
Units	ppm	ppm	ppm	ppm	%	%	K#/Hr
Range	0-500	0-200	0-200	0-2000	0-20	0-25	0-100
08/13/2009 09:37	54.0	0	25	24	8.0	12.16	81.0
08/13/2009 09:38	86.5	0	19	19	9.0	11.00	82.0
08/13/2009 09:39	88.0	0	10	9	8.6	11.54	83.0
08/13/2009 09:40	42.3	0	8	8	7.5	12.83	82.0
08/13/2009 09:41	31.0	0	14	13	7.3	12.95	81.0
08/13/2009 09:42	35.0	0	16	16	7.4	12.89	82.0
08/13/2009 09:43	79.3	0	21	21	9.5	10.35	84.0
08/13/2009 09:44	80.5	0	10	9	8.7	11.56	83.0
08/13/2009 09:45	40.8	0	8	7	6.8	13.73	81.0
08/13/2009 09:46	36.3	0	15	14	6.3	14.18	80.0
08/13/2009 09:47	51.8	0	22	22	7.7	12.54	81.0
08/13/2009 09:48	78.8	0	17	17	9.2	10.76	84.0
08/13/2009 09:49	114.5	0	13	13	10.0	9.88	86.0
08/13/2009 09:50	91.8	0	8	7	8.9	11.14	86.0
08/13/2009 09:51	41.8	0	7	6	7.7	12.61	85.0
08/13/2009 09:52	26.0	0	7	6	6.7	13.76	83.0
08/13/2009 09:53	34.0	0	13	13	7.1	13.11	82.0
08/13/2009 09:54	51.0	0	17	16	7.4	12.85	82.0
08/13/2009 09:55	71.3	0	22	22	8.0	12.18	82.0
08/13/2009 09:56	99.0	0	20	20	8.7	11.38	84.0
08/13/2009 09:57	117.3	0	21	21	9.4	10.70	84.0
08/13/2009 09:58	65.5	0	11	11	7.7	12.56	83.0
08/13/2009 09:59	47.0	0	16	15	7.1	13.25	82.0
08/13/2009 10:00							
Raw Average =	63	0	14.7	14.3	8.0	12.1	82.7
O2 Corrected Avg. =	101	0	23	22			
Lbs./Hour Avg. =	24.19	0.00	3.42				
Period % Recovery =	100.0	100.0	100.0	100.0	100.0	100.0	100.0

Date/Time Printed: 08/13/2009 10:02

Economizer Rata Report

RZ4

COVANTA ENERGY

Company: Covanta Huntington, Inc.
Report Name: UNIT #1 ECON RATA

Start of Report: 08/13/2009 10:11
End of Report: 08/13/2009 10:34

Validation: Valid Data Only

	SO2e	CO2e	O2e
Group#-Channel#	G8-C6	G8-C2	G8-C1
Long Descrip.	U-1 SO2 E	U-1 CO2 E	U-1 O2 Ec
Short Descrip.	SO2e	CO2e	O2e
Units	ppm	%	%
Range	0-500	0-20	0-25
08/13/2009 10:11	42	8.9	11.1
08/13/2009 10:12	42	9.1	10.9
08/13/2009 10:13	44	10.1	9.6
08/13/2009 10:14	43	8.9	10.8
08/13/2009 10:15	41	8.7	11.3
08/13/2009 10:16	44	9.0	11.0
08/13/2009 10:17	51	9.5	10.3
08/13/2009 10:18	54	9.3	10.5
08/13/2009 10:19	51	9.1	10.7
08/13/2009 10:20	50	8.6	11.2
08/13/2009 10:21	49	9.0	10.9
08/13/2009 10:22	48	9.3	10.5
08/13/2009 10:23	47	8.7	11.1
08/13/2009 10:24	47	8.0	11.9
08/13/2009 10:25	52	8.6	11.3
08/13/2009 10:26	58	9.3	10.5
08/13/2009 10:27	59	9.5	10.2
08/13/2009 10:28	55	8.9	10.8
08/13/2009 10:29	58	8.6	11.2
08/13/2009 10:30	64	9.1	10.8
08/13/2009 10:31	70	9.6	10.1
08/13/2009 10:32	68	8.7	11.0
08/13/2009 10:33	68	9.0	10.9
08/13/2009 10:34	71	9.4	10.2
Raw Average =	53	9.0	10.7
O2 Corrected Avg. =	73		
Period % Recovery =	100.0	100.0	100.0

Date/Time Printed: 08/13/2009 10:37

R#4

Stack Rata Report

COVANTA ENERGY

Company: Covanta Huntington, Inc.
Report Name: UNIT #1 STACK RATA

Start of Report: 08/13/2009 10:11
End of Report: 08/13/2009 10:34

Validation: Valid Data Only

	NOxs	SO2S	COlow	COhigh	CO2	O2	Steam Flow
Group#-Channel#	G8-C10	G8-C9	G8-C3	G8-C4	G8-C8	G8-C7	G8-C19
Long Descrip.	U-1 NOx S	U-1 SO2 S	U-1 CO St	U-1 CO St	U-1 CO2 S	U-1 O2 St	U-1 Steam
Short Descrip.	NOxs	SO2s	COs LoRng	COs HiRng	CO2s	O2s	Steam
Units	ppm	ppm	ppm	ppm	%	%	K#/Hr
Range	0-500	0-200	0-200	0-2000	0-20	0-25	0-100
08/13/2009 10:11	53.5	0	19	19	7.8	12.39	81.0
08/13/2009 10:12	63.5	0	17	17	8.1	12.08	82.0
08/13/2009 10:13	85.5	0	21	21	9.0	11.00	82.0
08/13/2009 10:14	68.5	0	12	11	8.1	12.01	82.0
08/13/2009 10:15	54.3	0	15	14	7.7	12.44	82.0
08/13/2009 10:16	60.5	0	18	17	7.9	12.15	82.0
08/13/2009 10:17	74.3	0	14	14	8.4	11.58	83.0
08/13/2009 10:18	76.0	0	14	13	8.3	11.73	83.0
08/13/2009 10:19	61.3	0	11	11	8.1	11.93	83.0
08/13/2009 10:20	51.0	0	12	12	7.7	12.39	83.0
08/13/2009 10:21	55.8	0	18	19	8.0	12.10	83.0
08/13/2009 10:22	71.0	0	17	17	8.3	11.70	83.0
08/13/2009 10:23	69.5	0	15	15	7.9	12.20	82.0
08/13/2009 10:24	53.0	0	17	17	7.2	12.96	81.0
08/13/2009 10:25	56.8	0	21	21	7.6	12.45	81.0
08/13/2009 10:26	72.8	0	16	16	8.3	11.70	82.0
08/13/2009 10:27	80.5	0	15	14	8.1	11.98	82.0
08/13/2009 10:28	67.3	0	12	11	7.6	12.54	82.0
08/13/2009 10:29	54.0	0	11	11	7.7	12.40	82.0
08/13/2009 10:30	59.3	0	17	17	8.0	12.03	82.0
08/13/2009 10:31	85.0	0	17	17	8.6	11.35	83.0
08/13/2009 10:32	76.8	0	10	9	7.9	12.20	82.0
08/13/2009 10:33	63.8	0	12	12	7.9	12.09	83.0
08/13/2009 10:34	80.3	0	14	13	8.4	11.54	83.0
Raw Average =	66	0	15.2	14.9	8.0	12.0	82.2
O2 Corrected Avg. =	104	0	23	23			
Lbs./Hour Avg. =	25.13	0.00	3.50				
Period % Recovery =	100.0	100.0	100.0	100.0	100.0	100.0	100.0

Date/Time Printed: 08/13/2009 10:37

R#5

Economizer Rata Report

COVANTA ENERGY

Company: Covanta Huntington, Inc.
Report Name: UNIT #1 ECON RATA

Start of Report: 08/13/2009 10:46
End of Report: 08/13/2009 11:09

Validation: Valid Data Only

	SO2e		CO2e	O2e	
Group#-Channel#	G8-C6		G8-C2	G8-C1	
Long Descrip.	U-1 SO2 E		U-1 CO2 E	U-1 O2 Ec	
Short Descrip.	SO2e		CO2e	O2e	
Units	ppm		%	%	
Range	0-500		0-20	0-25	
08/13/2009 10:46	48		8.7	11.2	
08/13/2009 10:47	49		9.0	10.7	
08/13/2009 10:48	49		8.6	11.0	
08/13/2009 10:49	37		8.2	11.6	
08/13/2009 10:50	33		8.3	11.8	
08/13/2009 10:51	34		9.2	10.4	
08/13/2009 10:52	29		7.8	12.1	
08/13/2009 10:53	25		8.1	11.9	
08/13/2009 10:54	25		7.9	12.0	
08/13/2009 10:55	26		8.6	11.4	
08/13/2009 10:56	29		9.4	10.4	
08/13/2009 10:57	30		9.8	9.9	
08/13/2009 10:58	31		9.4	10.2	
08/13/2009 10:59	24		8.4	11.5	
08/13/2009 11:01			8.2		
08/13/2009 11:02	19	<	8.2	12.0	<
08/13/2009 11:03	18		7.9	12.2	
08/13/2009 11:04	25		10.0	9.9	
08/13/2009 11:05	27		8.5	11.3	
08/13/2009 11:06	24		8.2	11.8	
08/13/2009 11:07	27		9.7	10.3	
08/13/2009 11:08	31		9.7	9.9	
08/13/2009 11:09	25		7.9	11.9	
Raw Average =	30		8.6	11.1	
O2 Corrected Avg. =	43				
Period % Recovery =	95.7		100.0	95.7	

Date/Time Printed: 08/13/2009 11:13

R#5

Stack Rata Report

COVANTA ENERGY

Company: Covanta Huntington, Inc.
Report Name: UNIT #1 STACK RATA

Start of Report: 08/13/2009 10:46
End of Report: 08/13/2009 11:09 **Validation:** Valid Data Only

	NOxs	SO2S	COlow	COhigh	CO2	O2	Steam Flow
Group#-Channel#	G8-C10	G8-C9	G8-C3	G8-C4	G8-C8	G8-C7	G8-C19
Long Descrip.	U-1 NOx S	U-1 SO2 S	U-1 CO St	U-1 CO St	U-1 CO2 S	U-1 O2 St	U-1 Steam
Short Descrip.	NOxs	SO2s	COs LoRng	COs HiRng	CO2s	O2s	Steam
Units	ppm	ppm	ppm	ppm	%	%	K#/Hr
Range	0-500	0-200	0-200	0-2000	0-20	0-25	0-100
08/13/2009 10:46	63.8	0	11	10	7.7	12.31	81.0
08/13/2009 10:47	52.8	0	11	10	8.0	11.86	82.0
08/13/2009 10:48	50.8	0	11	10	7.9	12.16	82.0
08/13/2009 10:49	54.0	0	10	10	7.3	12.71	81.0
08/13/2009 10:50	58.5	0	12	11	7.3	12.80	81.0
08/13/2009 10:51	79.0	0	14	14	8.3	11.63	81.0
08/13/2009 10:52	58.0	0	11	11	7.1	13.11	80.0
08/13/2009 10:53	52.5	0	20	20	7.1	13.05	79.0
08/13/2009 10:54	51.8	0	20	20	7.1	13.08	79.0
08/13/2009 10:55	44.5	0	22	23	7.5	12.58	79.0
08/13/2009 10:56	50.3	0	29	28	8.3	11.68	80.0
08/13/2009 10:57	73.3	0	21	21	8.7	11.16	81.0
08/13/2009 10:58	84.3	0	15	14	8.5	11.48	81.0
08/13/2009 10:59	69.0	0	11	11	7.5	12.64	81.0
08/13/2009 11:00							
08/13/2009 11:01							
08/13/2009 11:02	53.5 <	0 <	12 <	11 <	7.6	13.03 <	82.0
08/13/2009 11:03	43.3	0	15	15	7.0	13.20	82.0
08/13/2009 11:04	72.3	0	25	24	8.7	11.16	83.0
08/13/2009 11:05	55.0	0	15	13	7.8	12.38	82.0
08/13/2009 11:06	40.3	0	15	15	7.2	12.93	82.0
08/13/2009 11:07	71.5	0	19	19	8.3	11.54	84.0
08/13/2009 11:08	105.3	0	15	14	8.8	11.23	84.0
08/13/2009 11:09	55.3	0	8	8	7.3	13.06	82.0
Raw Average =	60	0	15.5	15.0	7.7	12.3	81.4
O2 Corrected Avg. =	98	0	25	24			
Lbs./Hour Avg. =	23.62	0.00	3.67				
Period % Recovery =	95.7	95.7	95.7	95.7	100.0	95.7	100.0

Date/Time Printed: 08/13/2009 11:13

R#6

Economizer Rata Report

COVANTA ENERGY

Company: Covanta Huntington, Inc.
Report Name: UNIT #1 ECON RATA

Start of Report: 08/13/2009 11:25
End of Report: 08/13/2009 11:48

Validation: Valid Data Only

	SO2e	CO2e	O2e
Group#-Channel#	G8-C6	G8-C2	G8-C1
Long Descrip.	U-1 SO2 E	U-1 CO2 E	U-1 O2 Ec
Short Descrip.	SO2e	CO2e	O2e
Units	ppm	%	%
Range	0-500	0-20	0-25
08/13/2009 11:25	26	9.2	10.6
08/13/2009 11:26	27	9.1	10.8
08/13/2009 11:27	28	8.3	11.6
08/13/2009 11:28	27	8.1	12.1
08/13/2009 11:29	31	8.9	11.0
08/13/2009 11:30	35	9.1	10.8
08/13/2009 11:31	37	8.9	11.0
08/13/2009 11:32	38	9.0	11.0
08/13/2009 11:33	40	10.2	9.4
08/13/2009 11:34	38	9.5	10.0
08/13/2009 11:35	33	8.4	11.3
08/13/2009 11:36	33	8.5	11.5
08/13/2009 11:37	37	9.3	10.5
08/13/2009 11:38	37	9.0	10.8
08/13/2009 11:39	35	8.8	11.1
08/13/2009 11:40	36	8.7	11.1
08/13/2009 11:41	37	9.0	11.0
08/13/2009 11:42	42	10.1	9.8
08/13/2009 11:43	48	9.9	9.7
08/13/2009 11:44	44	8.4	11.5
08/13/2009 11:45	40	7.9	12.2
08/13/2009 11:46	41	8.8	11.3
08/13/2009 11:47	45	9.4	10.4
08/13/2009 11:48	47	10.0	9.9
Raw Average =	36	9.0	10.8
O2 Corrected Avg. =	50		
Period % Recovery =	100.0	100.0	100.0

Date/Time Printed: 08/13/2009 11:54

R#6

Stack Rata Report

COVANTA ENERGY

Company: Covanta Huntington, Inc.
Report Name: UNIT #1 STACK RATA

Start of Report: 08/13/2009 11:25
End of Report: 08/13/2009 11:48

Validation: Valid Data Only

	NOxs	SO2S	COlow	COhigh	CO2	O2	Steam Flow
Group#-Channel#	G8-C10	G8-C9	G8-C3	G8-C4	G8-C8	G8-C7	G8-C19
Long Descrip.	U-1 NOx S	U-1 SO2 S	U-1 CO St	U-1 CO St	U-1 CO2 S	U-1 O2 St	U-1 Steam
Short Descrip.	NOxs	SO2s	COs LoRng	COs HiRng	CO2s	O2s	Steam
Units	ppm	ppm	ppm	ppm	%	%	K#/Hr
Range	0-500	0-200	0-200	0-2000	0-20	0-25	0-100
08/13/2009 11:25	89.5	0	9	8	8.3	11.84	81.0
08/13/2009 11:26	71.3	0	9	9	8.1	12.00	81.0
08/13/2009 11:27	54.5	0	10	9	7.6	12.74	80.0
08/13/2009 11:28	44.3	0	11	11	7.2	13.18	80.0
08/13/2009 11:29	49.0	0	14	13	7.9	12.21	80.0
08/13/2009 11:30	56.5	0	12	11	8.1	11.99	80.0
08/13/2009 11:31	64.5	0	9	8	8.0	12.21	80.0
08/13/2009 11:32	53.0	0	11	12	7.9	12.19	81.0
08/13/2009 11:33	82.0	0	16	14	9.0	10.79	82.0
08/13/2009 11:34	110.0	0	7	6	8.7	11.31	82.0
08/13/2009 11:35	69.5	0	6	6	7.7	12.43	82.0
08/13/2009 11:36	43.5	0	10	11	7.5	12.64	82.0
08/13/2009 11:37	64.3	0	14	14	8.2	11.74	82.0
08/13/2009 11:38	74.5	0	11	11	8.1	11.98	82.0
08/13/2009 11:39	63.3	0	14	14	7.8	12.28	82.0
08/13/2009 11:40	59.3	0	15	15	7.9	12.25	82.0
08/13/2009 11:41	63.3	0	16	16	7.9	12.16	82.0
08/13/2009 11:42	82.0	0	15	14	8.8	11.08	83.0
08/13/2009 11:43	106.5	0	10	9	9.0	10.98	84.0
08/13/2009 11:44	60.5	0	7	7	7.7	12.61	82.0
08/13/2009 11:45	45.5	0	10	11	7.0	13.25	81.0
08/13/2009 11:46	55.0	0	19	19	7.7	12.45	81.0
08/13/2009 11:47	62.5	0	15	14	8.4	11.70	82.0
08/13/2009 11:48	66.8	0	14	14	8.8	11.20	83.0
Raw Average =	66	0	11.8	11.5	8.0	12.0	81.5
O2 Corrected Avg. =	104	0	18	18			
Lbs./Hour Avg. =	24.77	0.00	2.69				
Period % Recovery =	100.0	100.0	100.0	100.0	100.0	100.0	100.0

Date/Time Printed: 08/13/2009 11:53

Economizer Rata Report

COVANTA ENERGY

Company: Covanta Huntington, Inc.
Report Name: UNIT #1 ECON RATA

Start of Report: 08/13/2009 12:00
End of Report: 08/13/2009 12:23

Validation: Valid Data Only

	SO2e		CO2e	O2e	
Group#-Channel#	G8-C6		G8-C2	G8-C1	
Long Descrip.	U-1 SO2 E		U-1 CO2 E	U-1 O2 Ec	
Short Descrip.	SO2e		CO2e	O2e	
Units	ppm		%	%	
Range	0-500		0-20	0-25	
08/13/2009 12:01			7.7		
08/13/2009 12:02	37	<	8.3	11.7	<
08/13/2009 12:03	39		8.6	11.5	
08/13/2009 12:04	39		8.5	11.6	
08/13/2009 12:05	38		8.8	11.3	
08/13/2009 12:06	42		10.5	9.3	
08/13/2009 12:07	39		9.7	10.0	
08/13/2009 12:08	30		8.1	11.8	
08/13/2009 12:09	28		8.2	11.9	
08/13/2009 12:10	29		8.6	11.4	
08/13/2009 12:11	29		8.5	11.5	
08/13/2009 12:12	28		8.6	11.4	
08/13/2009 12:13	27		8.4	11.6	
08/13/2009 12:14	29		10.2	9.8	
08/13/2009 12:15	31		9.7	10.0	
08/13/2009 12:16	24		8.2	11.8	
08/13/2009 12:17	23		9.0	11.0	
08/13/2009 12:18	23		7.9	12.1	
08/13/2009 12:19	20		7.8	12.5	
08/13/2009 12:20	23		8.6	11.4	
08/13/2009 12:21	26		8.2	11.8	
08/13/2009 12:22	32		8.5	11.7	
08/13/2009 12:23	30		8.5	11.5	
Raw Average =	30		8.6	11.3	
O2 Corrected Avg. =	43				
Period % Recovery =	95.7		100.0	95.7	

Date/Time Printed: 08/13/2009 12:26

R#7

Stack Rata Report

COVANTA ENERGY

Company: Covanta Huntington, Inc.
Report Name: UNIT #1 STACK RATA

Start of Report: 08/13/2009 12:00
End of Report: 08/13/2009 12:23 **Validation:** Valid Data Only

	NOxs	SO2S	COlow	COhigh	CO2	O2	Steam Flow
Group#-Channel#	G8-C10	G8-C9	G8-C3	G8-C4	G8-C8	G8-C7	G8-C19
Long Descrip.	U-1 NOx S	U-1 SO2 S	U-1 CO St	U-1 CO St	U-1 CO2 S	U-1 O2 St	U-1 Steam
Short Descrip.	NOxs	SO2s	COs LoRng	COs HiRng	CO2s	O2s	Steam
Units	ppm	ppm	ppm	ppm	%	%	K#/Hr
Range	0-500	0-200	0-200	0-2000	0-20	0-25	0-100
08/13/2009 12:00							
08/13/2009 12:01							
08/13/2009 12:02	91.3	< 0	< 11	< 9	< 7.6	12.74	< 82.0
08/13/2009 12:03	89.8	0	12	12	7.6	12.58	82.0
08/13/2009 12:04	77.0	0	17	17	7.6	12.69	81.0
08/13/2009 12:05	71.5	0	22	22	7.7	12.48	82.0
08/13/2009 12:06	115.3	0	21	18	9.2	10.73	84.0
08/13/2009 12:07	103.3	0	9	7	8.8	11.26	84.0
08/13/2009 12:08	45.8	0	6	6	7.4	12.93	83.0
08/13/2009 12:09	37.5	0	12	13	7.2	13.03	82.0
08/13/2009 12:10	49.0	0	15	15	7.6	12.60	82.0
08/13/2009 12:11	58.0	0	14	14	7.7	12.59	82.0
08/13/2009 12:12	61.8	0	14	14	7.7	12.51	82.0
08/13/2009 12:13	52.0	0	14	14	7.5	12.69	82.0
08/13/2009 12:14	70.5	0	21	22	8.8	11.13	83.0
08/13/2009 12:15	84.0	0	15	12	8.9	11.24	83.0
08/13/2009 12:16	42.8	0	8	7	7.5	12.91	83.0
08/13/2009 12:17	50.3	0	14	14	7.9	12.25	83.0
08/13/2009 12:18	45.3	0	13	12	7.3	13.13	81.0
08/13/2009 12:19	37.5	0	16	18	6.8	13.58	81.0
08/13/2009 12:20	50.0	0	21	20	7.7	12.56	81.0
08/13/2009 12:21	47.5	0	16	15	7.4	12.94	80.0
08/13/2009 12:22	50.8	0	18	19	7.4	12.80	80.0
08/13/2009 12:23	57.8	0	19	19	7.7	12.56	80.0
Raw Average =	63	0	14.9	14.5	7.7	12.4	81.9
O2 Corrected Avg. =	103	0	24	23			
Lbs./Hour Avg. =	24.69	0.00	3.54				
Period % Recovery =	95.7	95.7	95.7	95.7	100.0	95.7	100.0

Date/Time Printed: 08/13/2009 12:26

R#8

Economizer Rata Report

COVANTA ENERGY

Company: Covanta Huntington, Inc.
Report Name: UNIT #1 ECON RATA

Start of Report: 08/13/2009 12:35
End of Report: 08/13/2009 12:58 **Validation:** Valid Data Only

	SO2e	CO2e	O2e
Group#-Channel#	G8-C6	G8-C2	G8-C1
Long Descrip.	U-1 SO2 E	U-1 CO2 E	U-1 O2 Ec
Short Descrip.	SO2e	CO2e	O2e
Units	ppm	%	%
Range	0-500	0-20	0-25
08/13/2009 12:35	34	8.8	11.1
08/13/2009 12:36	33	8.6	11.3
08/13/2009 12:37	34	7.9	12.1
08/13/2009 12:38	33	8.1	12.1
08/13/2009 12:39	38	8.9	11.1
08/13/2009 12:40	36	8.9	11.1
08/13/2009 12:41	37	9.4	10.6
08/13/2009 12:42	33	9.8	10.2
08/13/2009 12:43	34	10.3	9.4
08/13/2009 12:44	27	9.3	10.6
08/13/2009 12:45	27	10.1	9.8
08/13/2009 12:46	26	9.6	10.1
08/13/2009 12:47	23	8.5	11.4
08/13/2009 12:48	23	9.0	11.0
08/13/2009 12:49	27	10.1	9.8
08/13/2009 12:50	26	9.2	10.7
08/13/2009 12:51	22	8.7	11.4
08/13/2009 12:52	23	9.5	10.6
08/13/2009 12:53	23	9.3	10.6
08/13/2009 12:54	19	8.0	12.1
08/13/2009 12:55	18	8.4	11.7
08/13/2009 12:56	19	8.7	11.4
08/13/2009 12:57	20	9.6	10.3
08/13/2009 12:58	23	9.7	10.1
Raw Average =	27	9.1	10.8
O2 Corrected Avg. =	37		
Period % Recovery =	100.0	100.0	100.0

Date/Time Printed: 08/13/2009 13:02

R#9

Stack Rata Report

COVANTA ENERGY

Company: Covanta Huntington, Inc.
Report Name: UNIT #1 STACK RATA

Start of Report: 08/13/2009 12:35
End of Report: 08/13/2009 12:58

Validation: Valid Data Only

	NOxs	SO2S	COlow	COhigh	CO2	O2	Steam Flow
Group#-Channel#	G8-C10	G8-C9	G8-C3	G8-C4	G8-C8	G8-C7	G8-C19
Long Descrip.	U-1 NOx S	U-1 SO2 S	U-1 CO St	U-1 CO St	U-1 CO2 S	U-1 O2 St	U-1 Steam
Short Descrip.	NOxs	SO2s	COs LoRng	COs HiRng	CO2s	O2s	Steam
Units	ppm	ppm	ppm	ppm	%	%	K#/Hr
Range	0-500	0-200	0-200	0-2000	0-20	0-25	0-100
08/13/2009 12:35	57.5	0	17	17	7.8	12.33	79.0
08/13/2009 12:36	50.3	0	16	15	7.7	12.49	79.0
08/13/2009 12:37	41.3	0	16	16	7.2	13.16	78.0
08/13/2009 12:38	38.5	0	22	24	7.1	13.18	77.0
08/13/2009 12:39	43.5	0	26	24	7.9	12.29	77.0
08/13/2009 12:40	39.8	0	20	20	7.9	12.34	78.0
08/13/2009 12:41	43.8	0	18	18	8.4	11.83	78.0
08/13/2009 12:42	49.3	0	16	16	8.6	11.48	80.0
08/13/2009 12:43	87.5	0	16	14	9.3	10.74	81.0
08/13/2009 12:44	77.5	0	7	7	8.4	11.80	81.0
08/13/2009 12:45	75.8	0	12	12	8.9	11.09	82.0
08/13/2009 12:46	83.0	0	10	8	8.7	11.38	83.0
08/13/2009 12:47	54.5	0	7	7	7.7	12.54	82.0
08/13/2009 12:48	62.8	0	13	13	8.0	12.23	83.0
08/13/2009 12:49	93.3	0	14	15	8.9	11.11	83.0
08/13/2009 12:50	96.0	0	11	9	8.4	11.91	83.0
08/13/2009 12:51	74.8	0	8	7	7.7	12.55	83.0
08/13/2009 12:52	86.3	0	9	9	8.3	11.81	83.0
08/13/2009 12:53	104.0	0	11	10	8.5	11.81	83.0
08/13/2009 12:54	66.3	0	7	7	7.3	13.21	82.0
08/13/2009 12:55	63.5	0	13	13	7.4	12.88	81.0
08/13/2009 12:56	69.8	0	14	14	7.7	12.55	81.0
08/13/2009 12:57	92.8	0	15	15	8.5	11.59	82.0
08/13/2009 12:58	113.8	0	11	9	8.7	11.43	82.0
Raw Average =	69	0	13.7	13.2	8.1	12.0	80.8
O2 Corrected Avg. =	109	0	21	20			
Lbs./Hour Avg. =	25.50	0.00	3.06				
Period % Recovery =	100.0	100.0	100.0	100.0	100.0	100.0	100.0

Date/Time Printed: 08/13/2009 13:03

R# 9

Economizer Rata Report

COVANTA ENERGY

Company: Covanta Huntington, Inc.
Report Name: UNIT #1 ECON RATA

Start of Report: 08/13/2009 13:10
End of Report: 08/13/2009 13:33

Validation: Valid Data Only

	SO2e	CO2e	O2e
Group#-Channel#	G8-C6	G8-C2	G8-C1
Long Descrip.	U-1 SO2 E	U-1 CO2 E	U-1 O2 Ec
Short Descrip.	SO2e	CO2e	O2e
Units	ppm	%	%
Range	0-500	0-20	0-25
08/13/2009 13:10	20	9.9	9.8
08/13/2009 13:11	18	8.7	11.2
08/13/2009 13:12	18	9.3	10.8
08/13/2009 13:13	23	10.9	8.8
08/13/2009 13:14	25	9.8	9.8
08/13/2009 13:15	22	8.1	11.7
08/13/2009 13:16	18	7.5	12.6
08/13/2009 13:17	20	8.5	11.5
08/13/2009 13:18	23	9.0	10.8
08/13/2009 13:19	23	9.2	10.8
08/13/2009 13:20	25	9.3	10.4
08/13/2009 13:21	23	8.5	11.4
08/13/2009 13:22	23	9.0	11.0
08/13/2009 13:23	26	9.1	10.7
08/13/2009 13:24	23	8.4	11.5
08/13/2009 13:25	23	8.3	11.8
08/13/2009 13:26	24	9.0	11.0
08/13/2009 13:27	29	9.0	10.9
08/13/2009 13:28	38	9.0	10.9
08/13/2009 13:29	38	8.7	11.2
08/13/2009 13:30	40	9.3	10.8
08/13/2009 13:31	47	9.7	10.0
08/13/2009 13:32	47	8.4	11.4
08/13/2009 13:33	48	7.9	12.2
Raw Average =	27	8.9	10.9
O2 Corrected Avg. =	38		
Period % Recovery =	100.0	100.0	100.0

Date/Time Printed: 08/13/2009 13:37

R4

Stack Rata Report

COVANTA ENERGY

Company: Covanta Huntington, Inc.
Report Name: UNIT #1 STACK RATA

Start of Report: 08/13/2009 13:10
End of Report: 08/13/2009 13:33 **Validation:** Valid Data Only

	NOxs	SO2S	COlow	COhigh	CO2	O2	Steam Flow
Group#-Channel#	G8-C10	G8-C9	G8-C3	G8-C4	G8-C8	G8-C7	G8-C19
Long Descrip.	U-1 NOx S	U-1 SO2 S	U-1 CO St	U-1 CO St	U-1 CO2 S	U-1 O2 St	U-1 Steam
Short Descrip.	NOxs	SO2s	COs LoRng	COs HiRng	CO2s	O2s	Steam
Units	ppm	ppm	ppm	ppm	%	%	K#/Hr
Range	0-500	0-200	0-200	0-2000	0-20	0-25	0-100
08/13/2009 13:10	97.0	0	17	15	9.0	11.11	83.0
08/13/2009 13:11	72.5	0	12	11	7.9	12.41	82.0
08/13/2009 13:12	68.3	0	15	16	8.1	11.99	83.0
08/13/2009 13:13	108.5	0	18	16	9.6	10.24	85.0
08/13/2009 13:14	100.0	0	8	7	8.9	11.15	85.0
08/13/2009 13:15	53.5	0	8	7	7.5	12.85	83.0
08/13/2009 13:16	40.8	0	12	12	6.7	13.64	82.0
08/13/2009 13:17	42.0	0	20	21	7.5	12.68	82.0
08/13/2009 13:18	51.8	0	21	21	8.1	12.01	82.0
08/13/2009 13:19	53.0	0	22	23	8.1	12.00	82.0
08/13/2009 13:20	69.5	0	20	18	8.4	11.71	82.0
08/13/2009 13:21	48.8	0	13	13	7.6	12.61	82.0
08/13/2009 13:22	52.5	0	16	17	7.9	12.19	83.0
08/13/2009 13:23	62.8	0	17	17	8.2	11.90	83.0
08/13/2009 13:24	49.3	0	14	15	7.6	12.64	82.0
08/13/2009 13:25	45.0	0	16	17	7.3	12.90	82.0
08/13/2009 13:26	53.0	0	22	23	7.9	12.18	82.0
08/13/2009 13:27	61.5	0	16	14	8.1	12.08	82.0
08/13/2009 13:28	62.8	0	13	13	8.0	12.11	82.0
08/13/2009 13:29	59.5	0	12	11	7.9	12.35	82.0
08/13/2009 13:30	72.3	0	15	15	8.1	11.99	83.0
08/13/2009 13:31	93.8	0	15	13	8.8	11.28	84.0
08/13/2009 13:32	74.8	0	9	8	7.7	12.60	83.0
08/13/2009 13:33	61.3	0	11	11	7.0	13.31	82.0
Raw Average =	64	0	15.0	14.7	8.0	12.1	82.6
O2 Corrected Avg. =	103	0	23	23			
Lbs./Hour Avg. =	24.70	0.00	3.50				
Period % Recovery =	100.0	100.0	100.0	100.0	100.0	100.0	100.0

Date/Time Printed: 08/13/2009 13:37

Economizer Rata Report

COVANTA ENERGY

Company: Covanta Huntington, Inc.
Report Name: UNIT #1 ECON RATA

Start of Report: 08/13/2009 13:45
End of Report: 08/13/2009 14:08

Validation: Valid Data Only

	SO2e		CO2e	O2e	
Group#-Channel#	G8-C6		G8-C2	G8-C1	
Long Descrip.	U-1 SO2 E		U-1 CO2 E	U-1 O2 Ec	
Short Descrip.	SO2e		CO2e	O2e	
Units	ppm		%	%	
Range	0-500		0-20	0-25	
08/13/2009 13:45	34		9.6	10.2	
08/13/2009 13:46	34		9.8	10.0	
08/13/2009 13:47	32		9.5	10.3	
08/13/2009 13:48	31		9.7	10.2	
08/13/2009 13:49	32		9.3	10.4	
08/13/2009 13:50	28		8.8	11.1	
08/13/2009 13:51	30		9.4	10.5	
08/13/2009 13:52	34		9.8	10.0	
08/13/2009 13:53	31		8.7	11.0	
08/13/2009 13:54	27		8.4	11.5	
08/13/2009 13:55	29		9.0	10.9	
08/13/2009 13:56	28		8.8	11.0	
08/13/2009 13:57	25		8.3	11.6	
08/13/2009 13:58	26		8.5	11.4	
08/13/2009 13:59	30		8.8	11.0	
08/13/2009 14:01			7.8		
08/13/2009 14:02	29	<	8.7	11.1	<
08/13/2009 14:03	32		8.7	11.2	
08/13/2009 14:04	37		9.1	10.7	
08/13/2009 14:05	39		8.8	11.0	
08/13/2009 14:06	38		8.5	11.5	
08/13/2009 14:07	38		9.1	10.7	
08/13/2009 14:08	33		8.3	11.6	
Raw Average =	31		8.9	10.8	
O2 Corrected Avg. =	43				
Period % Recovery =	95.7		100.0	95.7	

Date/Time Printed: 08/13/2009 14:10

Stack Rata Report

Company: Covanta Huntington, Inc.
Report Name: UNIT #1 STACK RATA

COVANTA ENERGY

Start of Report: 08/13/2009 13:45
End of Report: 08/13/2009 14:08 **Validation:** Valid Data Only

	NOxs	SO2S	COlow	COhigh	CO2	O2	Steam Flow
Group#-Channel#	G8-C10	G8-C9	G8-C3	G8-C4	G8-C8	G8-C7	G8-C19
Long Descrip.	U-1 NOx S	U-1 SO2 S	U-1 CO St	U-1 CO St	U-1 CO2 S	U-1 O2 St	U-1 Steam
Short Descrip.	NOxs	SO2s	COs LoRng	COs HiRng	CO2s	O2s	Steam
Units	ppm	ppm	ppm	ppm	%	%	K#/Hr
Range	0-500	0-200	0-200	0-2000	0-20	0-25	0-100
08/13/2009 13:45	82.5	0	17	17	8.5	11.49	82.0
08/13/2009 13:46	70.8	0	19	20	8.7	11.33	82.0
08/13/2009 13:47	61.8	0	17	16	8.5	11.64	82.0
08/13/2009 13:48	62.8	0	15	15	8.6	11.48	83.0
08/13/2009 13:49	70.0	0	15	15	8.4	11.68	83.0
08/13/2009 13:50	52.8	0	12	12	7.8	12.35	82.0
08/13/2009 13:51	64.8	0	15	14	8.3	11.73	83.0
08/13/2009 13:52	89.3	0	13	12	8.7	11.28	84.0
08/13/2009 13:53	70.3	0	11	10	8.0	12.18	83.0
08/13/2009 13:54	52.8	0	12	12	7.5	12.66	83.0
08/13/2009 13:55	63.8	0	20	21	8.0	12.10	83.0
08/13/2009 13:56	70.8	0	17	16	7.9	12.25	82.0
08/13/2009 13:57	63.3	0	14	14	7.5	12.71	82.0
08/13/2009 13:58	60.8	0	18	19	7.6	12.55	82.0
08/13/2009 13:59	69.5	0	21	22	7.9	12.18	82.0
08/13/2009 14:00							
08/13/2009 14:01							
08/13/2009 14:02	83.3 <	0 <	17 <	16 <	7.8	12.28	< 82.0
08/13/2009 14:03	88.5	0	16	16	7.8	12.34	83.0
08/13/2009 14:04	88.8	0	16	15	8.2	11.95	83.0
08/13/2009 14:05	80.8	0	13	11	7.9	12.23	83.0
08/13/2009 14:06	60.0	0	10	9	7.6	12.63	83.0
08/13/2009 14:07	78.0	0	15	14	8.1	11.98	83.0
08/13/2009 14:08	63.3	0	11	9	7.5	12.74	83.0
Raw Average =	70	0	15.1	14.7	7.9	12.0	82.5
O2 Corrected Avg. =	110	0	23	23			
Lbs./Hour Avg. =	26.88	0.00	3.52				
Period % Recovery =	95.7	95.7	95.7	95.7	100.0	95.7	100.0

Date/Time Printed: 08/13/2009 14:10

R#1

Economizer Rata Report

COVANTA ENERGY

Company: Covanta Huntington, Inc.
Report Name: UNIT #2 ECON RATA

Start of Report: 08/12/2009 09:09
End of Report: 08/12/2009 09:32 **Validation:** Valid Data Only

	SO2e		CO2e	O2e	
Group#-Channel#	G25-C6		G25-C2	G25-C1	
Long Descrip.	U-2 SO2 E		U-2 CO2 E	U-2 O2 Ec	
Short Descrip.	SO2e		CO2e	O2e	
Units	ppm		%	%	
Range	0-500		0-20	0-25	
08/12/2009 09:09	37		8.1	11.4	
08/12/2009 09:10	35		8.3	11.0	
08/12/2009 09:11	38		8.9	10.4	
08/12/2009 09:12	35		8.6	10.8	
08/12/2009 09:13	33		8.8	10.6	
08/12/2009 09:14	31		8.3	11.1	
08/12/2009 09:16			7.8		
08/12/2009 09:17	28	<	8.5	10.9	<
08/12/2009 09:18	31		8.4	11.0	
08/12/2009 09:19	35		9.1	10.2	
08/12/2009 09:20	36		8.9	10.4	
08/12/2009 09:21	35		8.6	10.8	
08/12/2009 09:22	34		8.2	11.2	
08/12/2009 09:23	37		8.4	11.0	
08/12/2009 09:24	38		9.0	10.3	
08/12/2009 09:25	42		8.9	10.4	
08/12/2009 09:26	42		8.1	11.3	
08/12/2009 09:27	42		8.1	11.3	
08/12/2009 09:28	63		10.5	8.7	
08/12/2009 09:29	66		9.8	9.3	
08/12/2009 09:30	50		8.0	11.4	
08/12/2009 09:31	41		7.1	12.4	
08/12/2009 09:32	50		8.1	11.1	
Raw Average =	39		8.5	10.7	
O2 Corrected Avg. =	54				
Period % Recovery =	95.7		100.0	95.7	

Date/Time Printed: 08/12/2009 09:34

R#1

Stack Rata Report

COVANTA ENERGY

Company: Covanta Huntington, Inc.
Report Name: UNIT #2 STACK RATA

Start of Report: 08/12/2009 09:09
End of Report: 08/12/2009 09:32 **Validation:** Valid Data Only

	NOxs	SO2S	COlow	COhigh	CO2	O2	Steam Flow
Group#-Channel#	G25-C10	G25-C9	G25-C3	G25-C4	G25-C8	G25-C7	G25-C19
Long Descrip.	U-2 NOx S	U-2 SO2 S	U-2 CO St	U-2 CO St	U-2 CO2 S	U-2 O2 St	U-2 Steam
Short Descrip.	NOxs	SO2s	COs LoRng	COs HiRng	CO2s	O2s	Steam
Units	ppm	ppm	ppm	ppm	%	%	K#/Hr
Range	0-500	0-200	0-200	0-2000	0-20	0-25	0-100
08/12/2009 09:09	57.0	0	16	15	7.0	13.16	83.2
08/12/2009 09:10	57.3	0	22	21	7.4	12.60	83.0
08/12/2009 09:11	59.8	0	24	24	7.7	12.33	83.0
08/12/2009 09:12	47.8	0	17	16	7.5	12.56	83.0
08/12/2009 09:13	53.0	0	24	24	7.7	12.43	82.9
08/12/2009 09:14	48.3	0	21	20	7.3	12.78	82.6
08/12/2009 09:15							
08/12/2009 09:16							
08/12/2009 09:17	50.8	< 0	< 16	< 15	< 7.5	12.94	< 82.8
08/12/2009 09:18	50.5	0	16	15	7.4	12.65	82.7
08/12/2009 09:19	66.5	0	19	18	8.0	11.99	83.2
08/12/2009 09:20	58.3	0	19	18	7.8	12.21	83.6
08/12/2009 09:21	48.5	0	18	17	7.4	12.73	83.3
08/12/2009 09:22	45.3	0	21	21	7.2	12.83	82.9
08/12/2009 09:23	50.3	0	24	24	7.4	12.69	82.9
08/12/2009 09:24	64.3	0	24	24	7.9	12.09	83.6
08/12/2009 09:25	57.3	0	22	22	7.7	12.40	83.6
08/12/2009 09:26	43.3	0	14	13	7.1	13.16	82.9
08/12/2009 09:27	49.5	0	16	15	7.3	12.64	83.8
08/12/2009 09:28	105.3	0	24	23	9.2	10.48	86.5
08/12/2009 09:29	84.0	0	13	13	8.3	11.59	87.3
08/12/2009 09:30	35.5	0	10	9	6.8	13.36	85.8
08/12/2009 09:31	33.3	0	9	8	6.2	13.96	84.1
08/12/2009 09:32	49.0	0	16	16	7.3	12.56	84.5
Raw Average =	55	0	18.4	17.7	7.5	12.5	83.6
O2 Corrected Avg. =	91	0	30	29			
Lbs./Hour Avg. =	22.73	0.00	4.61				
Period % Recovery =	95.7	95.7	95.7	95.7	100.0	95.7	100.0

Date/Time Printed: 08/12/2009 09:34

R#2

Economizer Rata Report

COVANTA ENERGY

Company: Covanta Huntington, Inc.
Report Name: UNIT #2 ECON RATA

Start of Report: 08/12/2009 09:46
End of Report: 08/12/2009 10:09

Validation: Valid Data Only

	SO2e	CO2e	O2e
Group#-Channel#	G25-C6	G25-C2	G25-C1
Long Descrip.	U-2 SO2 E	U-2 CO2 E	U-2 O2 Ec
Short Descrip.	SO2e	CO2e	O2e
Units	ppm	%	%
Range	0-500	0-20	0-25
08/12/2009 09:46	56	8.0	11.4
08/12/2009 09:47	57	8.5	10.8
08/12/2009 09:48	57	8.9	10.3
08/12/2009 09:49	57	8.6	10.7
08/12/2009 09:50	53	8.3	11.1
08/12/2009 09:51	53	9.0	10.3
08/12/2009 09:52	46	8.5	10.8
08/12/2009 09:53	43	8.6	10.8
08/12/2009 09:54	42	8.4	11.0
08/12/2009 09:55	40	8.5	10.9
08/12/2009 09:56	42	8.7	10.7
08/12/2009 09:57	38	8.0	11.6
08/12/2009 09:58	37	8.2	11.2
08/12/2009 09:59	40	8.9	10.6
08/12/2009 10:00	42	8.8	10.5
08/12/2009 10:01	42	8.2	11.3
08/12/2009 10:02	44	8.2	11.3
08/12/2009 10:03	47	9.2	10.1
08/12/2009 10:04	45	8.5	10.9
08/12/2009 10:05	42	7.9	11.7
08/12/2009 10:06	43	8.2	11.2
08/12/2009 10:07	52	8.8	10.6
08/12/2009 10:08	48	8.0	11.5
08/12/2009 10:09	50	8.7	10.6
Raw Average =	46	8.4	10.9
O2 Corrected Avg. =	64		
Period % Recovery =	100.0	100.0	100.0

Date/Time Printed: 08/12/2009 10:17

R#2

Stack Rata Report

COVANTA ENERGY

Company: Covanta Huntington, Inc.
Report Name: UNIT #2 STACK RATA

Start of Report: 08/12/2009 09:46
End of Report: 08/12/2009 10:09

Validation: Valid Data Only

	NOxs	SO2S	COlow	COhigh	CO2	O2	Steam Flow
Group#-Channel#	G25-C10	G25-C9	G25-C3	G25-C4	G25-C8	G25-C7	G25-C19
Long Descrip.	U-2 NOx S	U-2 SO2 S	U-2 CO St	U-2 CO St	U-2 CO2 S	U-2 O2 St	U-2 Steam
Short Descrip.	NOxs	SO2s	COs LoRng	COs HiRng	CO2s	O2s	Steam
Units	ppm	ppm	ppm	ppm	%	%	K#/Hr
Range	0-500	0-200	0-200	0-2000	0-20	0-25	0-100
08/12/2009 09:46	52.5	0	33	32	7.1	12.95	79.8
08/12/2009 09:47	65.8	0	28	28	7.4	12.49	80.3
08/12/2009 09:48	83.0	0	22	21	7.8	12.16	81.2
08/12/2009 09:49	68.8	0	26	26	7.5	12.56	81.4
08/12/2009 09:50	61.0	0	28	28	7.3	12.75	81.8
08/12/2009 09:51	79.3	0	28	28	7.9	12.04	82.6
08/12/2009 09:52	63.5	0	25	25	7.4	12.71	82.3
08/12/2009 09:53	63.3	0	26	26	7.6	12.45	82.4
08/12/2009 09:54	57.0	0	28	28	7.3	12.81	82.2
08/12/2009 09:55	57.0	0	29	29	7.4	12.58	82.5
08/12/2009 09:56	62.0	0	25	25	7.5	12.55	82.4
08/12/2009 09:57	47.5	0	19	18	6.9	13.35	81.6
08/12/2009 09:58	51.3	0	32	32	7.2	12.84	81.5
08/12/2009 09:59	67.8	0	29	28	7.7	12.30	82.1
08/12/2009 10:00	69.8	0	20	19	7.6	12.44	82.4
08/12/2009 10:01	49.3	0	22	21	7.1	13.11	82.0
08/12/2009 10:02	51.3	0	31	32	7.3	12.80	82.4
08/12/2009 10:03	73.0	0	30	30	8.0	12.05	83.2
08/12/2009 10:04	49.3	0	18	17	7.3	12.85	82.9
08/12/2009 10:05	37.5	0	20	20	6.8	13.46	82.0
08/12/2009 10:06	57.8	0	31	31	7.3	12.73	82.4
08/12/2009 10:07	72.5	0	24	24	7.5	12.58	82.3
08/12/2009 10:08	53.8	0	15	14	7.0	13.01	82.5
08/12/2009 10:09	73.8	0	21	20	7.6	12.48	82.8
Raw Average =	61	0	25.4	25.0	7.4	12.6	82.0
O2 Corrected Avg. =	103	0	42	42			
Lbs./Hour Avg. =	25.04	0.00	6.33				
Period % Recovery =	100.0	100.0	100.0	100.0	100.0	100.0	100.0

Date/Time Printed: 08/12/2009 10:17

Economizer Rata Report

Rd3

COVANTA ENERGY

Company: Covanta Huntington, Inc.
Report Name: UNIT #2 ECON RATA

Start of Report: 08/12/2009 10:21
End of Report: 08/12/2009 10:44

Validation: Valid Data Only

	SO2e	CO2e	O2e
Group#-Channel#	G25-C6	G25-C2	G25-C1
Long Descrip.	U-2 SO2 E	U-2 CO2 E	U-2 O2 Ec
Short Descrip.	SO2e	CO2e	O2e
Units	ppm	%	%
Range	0-500	0-20	0-25
08/12/2009 10:21	43	8.1	11.5
08/12/2009 10:22	45	8.7	10.8
08/12/2009 10:23	42	8.2	11.4
08/12/2009 10:24	40	8.9	10.6
08/12/2009 10:25	37	8.0	11.7
08/12/2009 10:26	33	8.1	11.5
08/12/2009 10:27	35	8.9	10.6
08/12/2009 10:28	31	8.3	11.2
08/12/2009 10:29	33	8.6	10.9
08/12/2009 10:30	33	8.6	10.9
08/12/2009 10:31	32	8.8	10.8
08/12/2009 10:32	35	9.0	10.6
08/12/2009 10:33	31	9.2	10.3
08/12/2009 10:34	32	9.4	10.1
08/12/2009 10:35	29	8.6	10.9
08/12/2009 10:36	28	8.5	11.1
08/12/2009 10:37	32	9.4	9.9
08/12/2009 10:38	30	8.0	11.5
08/12/2009 10:39	25	7.4	12.4
08/12/2009 10:40	26	8.2	11.3
08/12/2009 10:41	26	8.5	10.9
08/12/2009 10:42	28	9.4	10.0
08/12/2009 10:43	26	8.2	11.4
08/12/2009 10:44	23	7.5	12.3
Raw Average =	32	8.5	11.0
O2 Corrected Avg. =	45		
Period % Recovery =	100.0	100.0	100.0

Date/Time Printed: 08/12/2009 10:46

R43

Stack Rata Report

COVANTA ENERGY

Company: Covanta Huntington, Inc.
Report Name: UNIT #2 STACK RATA

Start of Report: 08/12/2009 10:21
End of Report: 08/12/2009 10:44 **Validation:** Valid Data Only

	NOxs	SO2S	COlow	COhigh	CO2	O2	Steam Flow
Group#-Channel#	G25-C10	G25-C9	G25-C3	G25-C4	G25-C8	G25-C7	G25-C19
Long Descrip.	U-2 NOx S	U-2 SO2 S	U-2 CO St	U-2 CO St	U-2 CO2 S	U-2 O2 St	U-2 Steam
Short Descrip.	NOxs	SO2s	COs LoRng	COs HiRng	CO2s	O2s	Steam
Units	ppm	ppm	ppm	ppm	%	%	K#/Hr
Range	0-500	0-200	0-200	0-2000	0-20	0-25	0-100
08/12/2009 10:21	59.0	0	47	47	7.0	13.09	81.7
08/12/2009 10:22	68.8	0	54	55	7.6	12.49	82.1
08/12/2009 10:23	50.3	0	48	49	7.1	13.08	82.2
08/12/2009 10:24	66.5	0	40	40	7.7	12.36	82.7
08/12/2009 10:25	50.0	0	28	28	6.8	13.54	81.8
08/12/2009 10:26	51.5	0	35	35	7.2	12.95	81.8
08/12/2009 10:27	65.5	0	36	36	7.7	12.55	81.7
08/12/2009 10:28	61.0	0	26	26	7.2	12.96	81.3
08/12/2009 10:29	62.0	0	31	32	7.4	12.70	81.1
08/12/2009 10:30	64.5	0	30	30	7.5	12.66	81.0
08/12/2009 10:31	70.3	0	24	24	7.6	12.56	81.0
08/12/2009 10:32	67.5	0	26	26	7.8	12.33	81.1
08/12/2009 10:33	71.5	0	26	26	8.0	12.04	81.8
08/12/2009 10:34	77.0	0	18	18	8.1	12.06	82.3
08/12/2009 10:35	62.0	0	13	12	7.4	12.83	82.0
08/12/2009 10:36	58.5	0	17	16	7.5	12.54	82.9
08/12/2009 10:37	78.5	0	25	24	8.1	11.98	83.5
08/12/2009 10:38	44.8	0	17	16	6.8	13.51	82.3
08/12/2009 10:39	45.3	0	23	23	6.4	13.83	81.1
08/12/2009 10:40	52.5	0	30	31	7.2	13.00	80.9
08/12/2009 10:41	58.5	0	27	27	7.5	12.56	81.6
08/12/2009 10:42	72.5	0	28	29	8.1	12.00	82.5
08/12/2009 10:43	47.0	0	21	20	7.0	13.34	81.6
08/12/2009 10:44	38.3	0	27	27	6.5	13.86	80.8
Raw Average =	60	0	29.0	29.0	7.3	12.7	81.7
O2 Corrected Avg. =	102	0	49	49			
Lbs./Hour Avg. =	24.59	0.00	7.22				
Period % Recovery =	100.0	100.0	100.0	100.0	100.0	100.0	100.0

Date/Time Printed: 08/12/2009 10:47

RATA

Economizer Rata Report

COVANTA ENERGY

Company: Covanta Huntington, Inc.
Report Name: UNIT #2 ECON RATA

Start of Report: 08/12/2009 11:00
End of Report: 08/12/2009 11:23 **Validation:** Valid Data Only

	SO2e	CO2e	O2e
Group#-Channel#	G25-C6	G25-C2	G25-C1
Long Descrip.	U-2 SO2 E	U-2 CO2 E	U-2 O2 Ec
Short Descrip.	SO2e	CO2e	O2e
Units	ppm	%	%
Range	0-500	0-20	0-25
08/12/2009 11:00	23	8.1	11.4
08/12/2009 11:01	24	8.9	10.5
08/12/2009 11:02	25	9.3	10.1
08/12/2009 11:03	24	8.4	11.1
08/12/2009 11:04	21	7.8	12.0
08/12/2009 11:05	21	8.0	11.5
08/12/2009 11:06	24	8.6	10.9
08/12/2009 11:07	24	8.3	11.2
08/12/2009 11:08	22	8.2	11.3
08/12/2009 11:09	24	8.2	11.2
08/12/2009 11:10	24	8.3	11.2
08/12/2009 11:11	24	8.2	11.4
08/12/2009 11:12	23	8.1	11.5
08/12/2009 11:13	23	8.4	11.2
08/12/2009 11:14	24	8.2	11.4
08/12/2009 11:16		8.0	
08/12/2009 11:17	22 <	8.8	10.3 <
08/12/2009 11:18	22	8.2	11.4
08/12/2009 11:19	20	8.1	11.5
08/12/2009 11:20	20	8.5	11.0
08/12/2009 11:21	20	8.9	10.6
08/12/2009 11:22	19	8.8	10.7
08/12/2009 11:23	20	9.6	9.9
Raw Average =	22	8.4	11.0
O2 Corrected Avg. =	31		
Period % Recovery =	95.7	100.0	95.7

Date/Time Printed: 08/12/2009 11:27

Stack Rata Report

RH 4

COVANTA ENERGY

Company: Covanta Huntington, Inc.
Report Name: UNIT #2 STACK RATA

Start of Report: 08/12/2009 11:00
End of Report: 08/12/2009 11:23 **Validation:** Valid Data Only

	NOxs	SO2S	COlow	COhigh	CO2	O2	Steam Flow
Group#-Channel#	G25-C10	G25-C9	G25-C3	G25-C4	G25-C8	G25-C7	G25-C19
Long Descrip.	U-2 NOx S	U-2 SO2 S	U-2 CO St	U-2 CO St	U-2 CO2 S	U-2 O2 St	U-2 Steam
Short Descrip.	NOxs	SO2s	COs LoRng	COs HiRng	CO2s	O2s	Steam
Units	ppm	ppm	ppm	ppm	%	%	K#/Hr
Range	0-500	0-200	0-200	0-2000	0-20	0-25	0-100
08/12/2009 11:00	55.3	0	21	20	7.1	13.08	81.9
08/12/2009 11:01	72.8	0	21	20	7.8	12.21	82.9
08/12/2009 11:02	77.8	0	21	21	8.0	12.08	83.5
08/12/2009 11:03	52.0	0	13	12	7.2	13.11	83.0
08/12/2009 11:04	37.0	0	12	11	6.5	13.88	82.1
08/12/2009 11:05	42.5	0	18	18	7.0	13.11	81.9
08/12/2009 11:06	61.8	0	20	20	7.5	12.69	82.2
08/12/2009 11:07	64.3	0	15	14	7.2	13.00	82.1
08/12/2009 11:08	62.8	0	17	16	7.1	13.06	81.9
08/12/2009 11:09	61.8	0	19	18	7.2	12.95	81.7
08/12/2009 11:10	58.8	0	19	19	7.2	12.99	81.5
08/12/2009 11:11	49.3	0	22	21	7.1	13.14	80.9
08/12/2009 11:12	45.3	0	22	21	7.1	13.16	80.6
08/12/2009 11:13	46.3	0	22	22	7.2	12.98	80.1
08/12/2009 11:14	47.0	0	25	25	7.2	12.99	80.0
08/12/2009 11:15							
08/12/2009 11:16							
08/12/2009 11:17	55.3 <	0 <	26 <	26 <	7.9	12.35 <	81.7
08/12/2009 11:18	39.0	0	21	21	7.1	13.20	81.2
08/12/2009 11:19	41.3	0	30	30	7.1	13.08	80.9
08/12/2009 11:20	51.0	0	38	38	7.5	12.70	81.0
08/12/2009 11:21	61.0	0	36	36	7.8	12.36	81.3
08/12/2009 11:22	56.8	0	36	36	7.7	12.44	81.8
08/12/2009 11:23	67.3	0	39	39	8.4	11.79	82.4
Raw Average =	54	0	23.3	22.9	7.3	12.8	81.5
O2 Corrected Avg. =	94	0	40	39			
Lbs./Hour Avg. =	22.45	0.00	5.80				
Period % Recovery =	95.7	95.7	95.7	95.7	100.0	95.7	100.0

Date/Time Printed: 08/12/2009 11:27

R #5

Economizer Rata Report

COVANTA ENERGY

Company: Covanta Huntington, Inc.
Report Name: UNIT #2 ECON RATA

Start of Report: 08/12/2009 11:39
End of Report: 08/12/2009 12:02

Validation: Valid Data Only

	SO2e	CO2e	O2e
Group#-Channel#	G25-C6	G25-C2	G25-C1
Long Descrip.	U-2 SO2 E	U-2 CO2 E	U-2 O2 Ec
Short Descrip.	SO2e	CO2e	O2e
Units	ppm	%	%
Range	0-500	0-20	0-25
08/12/2009 11:39	31	9.6	9.7
08/12/2009 11:40	29	9.2	10.2
08/12/2009 11:41	29	9.1	10.2
08/12/2009 11:42	29	8.3	11.1
08/12/2009 11:43	28	7.8	11.8
08/12/2009 11:44	29	8.4	11.0
08/12/2009 11:45	34	8.9	10.5
08/12/2009 11:46	33	8.1	11.4
08/12/2009 11:47	31	8.1	11.4
08/12/2009 11:48	37	9.0	10.4
08/12/2009 11:49	36	8.2	11.2
08/12/2009 11:50	33	8.4	11.0
08/12/2009 11:51	33	8.7	10.7
08/12/2009 11:52	28	8.0	11.7
08/12/2009 11:53	29	8.2	11.2
08/12/2009 11:54	29	7.5	12.1
08/12/2009 11:55	29	7.8	11.8
08/12/2009 11:56	31	8.0	11.4
08/12/2009 11:57	30	8.1	11.3
08/12/2009 11:58	29	8.4	11.0
08/12/2009 11:59	28	8.5	10.9
08/12/2009 12:00	28	9.4	9.9
08/12/2009 12:01	32	9.4	9.9
08/12/2009 12:02	27	8.2	11.2
Raw Average =	30	8.4	10.9
O2 Corrected Avg. =	42		
Period % Recovery =	100.0	100.0	100.0

Date/Time Printed: 08/12/2009 12:11

R#5

Stack Rata Report

COVANTA ENERGY

Company: Covanta Huntington, Inc.
Report Name: UNIT #2 STACK RATA

Start of Report: 08/12/2009 11:39
End of Report: 08/12/2009 12:02

Validation: Valid Data Only

	NOxs	SO2S	COlow	COhigh	CO2	O2	Steam Flow
Group#-Channel#	G25-C10	G25-C9	G25-C3	G25-C4	G25-C8	G25-C7	G25-C19
Long Descrip.	U-2 NOx S	U-2 SO2 S	U-2 CO St	U-2 CO St	U-2 CO2 S	U-2 O2 St	U-2 Steam
Short Descrip.	NOxs	SO2s	COs LoRng	COs HiRng	CO2s	O2s	Steam
Units	ppm	ppm	ppm	ppm	%	%	K#/Hr
Range	0-500	0-200	0-200	0-2000	0-20	0-25	0-100
08/12/2009 11:39	84.3	0	30	30	8.0	12.05	82.5
08/12/2009 11:40	72.8	0	14	12	7.3	12.71	83.3
08/12/2009 11:41	57.5	0	10	9	7.4	12.64	83.6
08/12/2009 11:42	40.8	0	13	12	7.1	12.98	83.1
08/12/2009 11:43	34.8	0	14	13	6.7	13.53	82.3
08/12/2009 11:44	53.5	0	21	20	7.4	12.60	82.6
08/12/2009 11:45	68.5	0	23	22	7.6	12.46	82.8
08/12/2009 11:46	51.5	0	15	14	6.9	13.24	82.1
08/12/2009 11:47	49.0	0	17	17	7.2	12.85	82.4
08/12/2009 11:48	70.8	0	23	22	7.7	12.34	82.8
08/12/2009 11:49	51.8	0	14	13	7.1	13.11	82.5
08/12/2009 11:50	57.0	0	16	15	7.3	12.61	83.0
08/12/2009 11:51	64.5	0	16	15	7.4	12.74	82.8
08/12/2009 11:52	46.8	0	10	9	6.8	13.29	82.5
08/12/2009 11:53	53.3	0	14	13	7.1	13.06	81.9
08/12/2009 11:54	45.0	0	12	11	6.5	13.74	81.0
08/12/2009 11:55	50.3	0	14	13	6.7	13.44	80.4
08/12/2009 11:56	52.3	0	18	18	7.0	13.11	80.1
08/12/2009 11:57	61.0	0	18	17	7.1	12.98	80.1
08/12/2009 11:58	75.5	0	20	19	7.3	12.71	80.4
08/12/2009 11:59	69.3	0	25	25	7.4	12.58	80.6
08/12/2009 12:00	85.3	0	26	26	8.2	11.60	81.8
08/12/2009 12:01	83.0	0	17	16	8.0	12.03	82.1
08/12/2009 12:02	55.8	0	13	12	7.1	13.15	81.5
Raw Average =	59	0	17.2	16.3	7.2	12.8	82.0
O2 Corrected Avg. =	102	0	29	28			
Lbs./Hour Avg. =	24.91	0.00	4.36				
Period % Recovery =	100.0	100.0	100.0	100.0	100.0	100.0	100.0

Date/Time Printed: 08/12/2009 12:14

R46

Economizer Rata Report

COVANTA ENERGY

Company: Covanta Huntington, Inc.
Report Name: UNIT #2 ECON RATA

Start of Report: 08/12/2009 12:13
End of Report: 08/12/2009 12:36 **Validation:** Valid Data Only

	SO2e		CO2e	O2e	
Group#-Channel#	G25-C6		G25-C2	G25-C1	
Long Descrip.	U-2 SO2 E		U-2 CO2 E	U-2 O2 Ec	
Short Descrip.	SO2e		CO2e	O2e	
Units	ppm		%	%	
Range	0-500		0-20	0-25	
08/12/2009 12:13	34		8.9	10.5	
08/12/2009 12:14	38		9.0	10.4	
08/12/2009 12:16			7.2		
08/12/2009 12:17	34	<	7.8	11.5	<
08/12/2009 12:18	40		8.8	10.7	
08/12/2009 12:19	39		8.3	11.3	
08/12/2009 12:20	39		8.6	10.9	
08/12/2009 12:21	40		8.2	11.3	
08/12/2009 12:22	38		8.4	11.2	
08/12/2009 12:23	38		8.4	11.2	
08/12/2009 12:24	39		8.6	10.8	
08/12/2009 12:25	36		9.1	10.3	
08/12/2009 12:26	40		9.6	9.8	
08/12/2009 12:27	38		9.4	10.0	
08/12/2009 12:28	38		9.0	10.3	
08/12/2009 12:29	38		8.4	11.0	
08/12/2009 12:30	40		8.3	11.0	
08/12/2009 12:31	39		8.1	11.3	
08/12/2009 12:32	41		8.7	10.6	
08/12/2009 12:33	40		8.4	11.0	
08/12/2009 12:34	43		8.4	10.9	
08/12/2009 12:35	49		8.1	11.3	
08/12/2009 12:36	46		7.8	11.7	
Raw Average =	39		8.5	10.8	
O2 Corrected Avg. =	54				
Period % Recovery =	95.7		100.0	95.7	

Date/Time Printed: 08/12/2009 12:43

R46

Stack Rata Report

COVANTA ENERGY

Company: Covanta Huntington, Inc.
Report Name: UNIT #2 STACK RATA

Start of Report: 08/12/2009 12:13
End of Report: 08/12/2009 12:36 **Validation:** Valid Data Only

	NOxs	SO2S	COlow	COhigh	CO2	O2	Steam Flow
Group#-Channel#	G25-C10	G25-C9	G25-C3	G25-C4	G25-C8	G25-C7	G25-C19
Long Descrip.	U-2 NOx S	U-2 SO2 S	U-2 CO St	U-2 CO St	U-2 CO2 S	U-2 O2 St	U-2 Steam
Short Descrip.	NOxs	SO2s	COs LoRng	COs HiRng	CO2s	O2s	Steam
Units	ppm	ppm	ppm	ppm	%	%	K#/Hr
Range	0-500	0-200	0-200	0-2000	0-20	0-25	0-100
08/12/2009 12:13	73.0	0	13	13	7.8	12.30	82.9
08/12/2009 12:14	69.5	0	13	12	7.7	12.43	82.7
08/12/2009 12:15							
08/12/2009 12:16							
08/12/2009 12:17	49.8 <	0 <	17 <	16 <	7.0	12.91 <	81.6
08/12/2009 12:18	57.3	0	22	21	7.6	12.53	81.5
08/12/2009 12:19	57.0	1	17	16	7.2	13.05	81.2
08/12/2009 12:20	58.5	1	15	15	7.5	12.73	81.0
08/12/2009 12:21	53.8	0	19	19	7.2	13.10	80.5
08/12/2009 12:22	52.0	1	23	23	7.3	12.91	80.1
08/12/2009 12:23	53.8	0	28	28	7.3	12.91	79.7
08/12/2009 12:24	52.5	0	29	29	7.5	12.60	79.8
08/12/2009 12:25	64.8	0	23	23	8.0	11.88	80.9
08/12/2009 12:26	72.8	0	24	24	8.2	11.75	81.8
08/12/2009 12:27	72.0	1	20	20	8.1	11.83	82.7
08/12/2009 12:28	71.0	1	13	12	7.8	12.30	83.0
08/12/2009 12:29	55.8	1	13	12	7.3	12.85	82.9
08/12/2009 12:30	51.3	1	15	15	7.3	12.81	82.7
08/12/2009 12:31	48.0	1	16	15	7.1	13.01	82.4
08/12/2009 12:32	60.0	1	16	15	7.6	12.41	82.7
08/12/2009 12:33	45.8	1	16	15	7.3	12.84	82.5
08/12/2009 12:34	48.8	0	16	16	7.4	12.63	82.6
08/12/2009 12:35	43.0	0	16	15	6.9	13.34	82.0
08/12/2009 12:36	37.8	0	16	16	6.8	13.29	81.6
Raw Average =	56	0	18.1	17.7	7.4	12.6	81.7
O2 Corrected Avg. =	95	0	30	29			
Lbs./Hour Avg. =	23.09	0.25	4.50				
Period % Recovery =	95.7	95.7	95.7	95.7	100.0	95.7	100.0

Date/Time Printed: 08/12/2009 12:43

R #7

Economizer Rata Report

COVANTA ENERGY

Company: Covanta Huntington, Inc.
Report Name: UNIT #2 ECON RATA

Start of Report: 08/12/2009 13:32
End of Report: 08/12/2009 13:55 **Validation:** Valid Data Only

	SO2e	CO2e	O2e
Group#-Channel#	G25-C6	G25-C2	G25-C1
Long Descrip.	U-2 SO2 E	U-2 CO2 E	U-2 O2 Ec
Short Descrip.	SO2e	CO2e	O2e
Units	ppm	%	%
Range	0-500	0-20	0-25
08/12/2009 13:32	45	9.3	10.1
08/12/2009 13:33	54	9.9	9.5
08/12/2009 13:34	49	9.2	10.3
08/12/2009 13:35	46	9.2	10.3
08/12/2009 13:36	43	9.4	10.2
08/12/2009 13:37	44	8.8	10.8
08/12/2009 13:38	42	8.4	11.3
08/12/2009 13:39	47	8.8	10.8
08/12/2009 13:40	49	9.5	10.1
08/12/2009 13:41	54	9.2	10.4
08/12/2009 13:42	55	8.8	10.8
08/12/2009 13:43	55	8.6	11.0
08/12/2009 13:44	58	9.1	10.4
08/12/2009 13:45	56	9.4	10.1
08/12/2009 13:46	60	9.9	9.5
08/12/2009 13:47	53	8.5	11.1
08/12/2009 13:48	49	8.3	11.3
08/12/2009 13:49	58	9.9	9.5
08/12/2009 13:50	58	9.5	10.0
08/12/2009 13:51	55	8.6	10.9
08/12/2009 13:52	60	8.7	10.8
08/12/2009 13:53	61	8.2	11.4
08/12/2009 13:54	62	8.6	10.8
08/12/2009 13:55	69	9.1	10.3
Raw Average =	53	9.0	10.4
O2 Corrected Avg. =	71		
Period % Recovery =	100.0	100.0	100.0

Date/Time Printed: 08/12/2009 13:57

Rt 7

Stack Rata Report

COVANTA ENERGY

Company: Covanta Huntington, Inc.
Report Name: UNIT #2 STACK RATA

Start of Report: 08/12/2009 13:32
End of Report: 08/12/2009 13:55 **Validation:** Valid Data Only

	NOxs	SO2S	COlow	COhigh	CO2	O2	Steam Flow
Group#-Channel#	G25-C10	G25-C9	G25-C3	G25-C4	G25-C8	G25-C7	G25-C19
Long Descrip.	U-2 NOx S	U-2 SO2 S	U-2 CO St	U-2 CO St	U-2 CO2 S	U-2 O2 St	U-2 Steam
Short Descrip.	NOxs	SO2s	COs LoRng	COs HiRng	CO2s	O2s	Steam
Units	ppm	ppm	ppm	ppm	%	%	K#/Hr
Range	0-500	0-200	0-200	0-2000	0-20	0-25	0-100
08/12/2009 13:32	69.3	0	21	20	8.2	11.73	79.4
08/12/2009 13:33	85.3	1	18	18	8.5	11.60	80.2
08/12/2009 13:34	74.8	0	17	16	8.0	12.23	80.6
08/12/2009 13:35	66.3	0	23	23	8.0	12.15	81.2
08/12/2009 13:36	61.8	0	29	29	8.1	12.09	81.5
08/12/2009 13:37	52.3	0	23	22	7.6	12.73	81.2
08/12/2009 13:38	51.0	0	27	28	7.4	12.99	80.5
08/12/2009 13:39	56.0	0	34	34	7.8	12.48	80.5
08/12/2009 13:40	68.0	0	36	36	8.3	11.99	80.9
08/12/2009 13:41	65.8	0	29	30	8.0	12.34	80.9
08/12/2009 13:42	56.8	0	24	23	7.7	12.64	80.6
08/12/2009 13:43	56.8	0	26	26	7.6	12.61	80.7
08/12/2009 13:44	71.8	0	28	28	8.0	12.26	81.1
08/12/2009 13:45	83.8	1	25	24	8.4	11.68	82.5
08/12/2009 13:46	99.3	0	19	18	8.5	11.60	83.4
08/12/2009 13:47	60.8	0	15	14	7.4	12.96	82.9
08/12/2009 13:48	46.8	1	23	23	7.5	12.74	83.0
08/12/2009 13:49	72.5	0	31	31	8.7	11.39	83.9
08/12/2009 13:50	77.0	1	13	12	8.2	12.05	84.1
08/12/2009 13:51	53.8	0	14	14	7.5	12.76	84.0
08/12/2009 13:52	54.8	0	20	19	7.6	12.59	83.8
08/12/2009 13:53	50.3	0	22	21	7.2	13.18	83.3
08/12/2009 13:54	66.5	0	28	29	7.7	12.38	83.9
08/12/2009 13:55	75.5	0	24	24	7.8	12.41	83.9
Raw Average =	65	0	23.7	23.4	7.9	12.3	82.0
O2 Corrected Avg. =	106	0	38	37			
Lbs./Hour Avg. =	25.16	0.08	5.52				
Period % Recovery =	100.0	100.0	100.0	100.0	100.0	100.0	100.0

Date/Time Printed: 08/12/2009 13:57

Pu 8

Economizer Rata Report

COVANTA ENERGY

Company: Covanta Huntington, Inc.
Report Name: UNIT #2 ECON RATA

Start of Report: 08/12/2009 14:11
End of Report: 08/12/2009 14:34 **Validation:** Valid Data Only

	SO2e		CO2e	O2e	
Group#-Channel#	G25-C6		G25-C2	G25-C1	
Long Descrip.	U-2 SO2 E		U-2 CO2 E	U-2 O2 Ec	
Short Descrip.	SO2e		CO2e	O2e	
Units	ppm		%	%	
Range	0-500		0-20	0-25	
08/12/2009 14:11	111		9.4	9.8	
08/12/2009 14:12	95		8.7	10.6	
08/12/2009 14:13	80		7.6	12.0	
08/12/2009 14:14	81		7.6	12.0	
08/12/2009 14:16			7.3		
08/12/2009 14:17	63	<	8.2	11.0	<
08/12/2009 14:18	67		8.5	10.8	
08/12/2009 14:19	63		8.7	10.6	
08/12/2009 14:20	57		8.2	11.1	
08/12/2009 14:21	47		7.7	11.8	
08/12/2009 14:22	44		8.1	11.2	
08/12/2009 14:23	43		8.3	11.1	
08/12/2009 14:24	42		8.8	10.5	
08/12/2009 14:25	39		8.5	10.7	
08/12/2009 14:26	36		8.1	11.2	
08/12/2009 14:27	33		8.3	11.0	
08/12/2009 14:28	34		9.2	10.1	
08/12/2009 14:29	28		8.1	11.3	
08/12/2009 14:30	25		7.5	12.1	
08/12/2009 14:31	26		8.1	11.3	
08/12/2009 14:32	28		8.9	10.5	
08/12/2009 14:33	28		8.6	10.7	
08/12/2009 14:34	25		7.5	12.1	
Raw Average =	49		8.2	11.0	
O2 Corrected Avg. =	70				
Period % Recovery =	95.7		100.0	95.7	

Date/Time Printed: 08/12/2009 14:38

R+E

Stack Rata Report

COVANTA ENERGY

Company: Covanta Huntington, Inc.
Report Name: UNIT #2 STACK RATA

Start of Report: 08/12/2009 14:11
End of Report: 08/12/2009 14:34

Validation: Valid Data Only

	NOxs	SO2S	COlow	COhigh	CO2	O2	Steam Flow
Group#-Channel#	G25-C10	G25-C9	G25-C3	G25-C4	G25-C8	G25-C7	G25-C19
Long Descrip.	U-2 NOx S	U-2 SO2 S	U-2 CO St	U-2 CO St	U-2 CO2 S	U-2 O2 St	U-2 Steam
Short Descrip.	NOxs	SO2s	COs LoRng	COs HiRng	CO2s	O2s	Steam
Units	ppm	ppm	ppm	ppm	%	%	K#/Hr
Range	0-500	0-200	0-200	0-2000	0-20	0-25	0-100
08/12/2009 14:11	86.3	0	26	26	8.3	11.66	83.9
08/12/2009 14:12	55.3	0	17	17	7.5	12.65	83.8
08/12/2009 14:13	34.3	0	18	17	6.6	13.74	82.7
08/12/2009 14:14	40.0	0	29	29	6.6	13.65	81.7
08/12/2009 14:15							
08/12/2009 14:16							
08/12/2009 14:17	40.0 <	0 <	23 <	23 <	7.3	12.78	< 81.7
08/12/2009 14:18	42.0	0	23	23	7.5	12.49	82.2
08/12/2009 14:19	53.3	0	18	18	7.6	12.38	82.7
08/12/2009 14:20	39.8	0	15	14	7.1	13.04	82.4
08/12/2009 14:21	39.0	0	17	17	6.7	13.45	81.9
08/12/2009 14:22	55.8	0	23	22	7.1	12.95	81.7
08/12/2009 14:23	61.0	0	22	22	7.3	12.70	82.0
08/12/2009 14:24	75.8	0	17	17	7.6	12.38	82.4
08/12/2009 14:25	61.5	0	13	11	7.5	12.54	82.6
08/12/2009 14:26	48.8	0	13	12	7.1	12.98	82.6
08/12/2009 14:27	60.8	0	15	14	7.4	12.48	83.4
08/12/2009 14:28	82.5	0	16	15	7.9	12.10	84.0
08/12/2009 14:29	47.5	0	10	9	7.0	13.21	83.4
08/12/2009 14:30	38.5	0	12	11	6.5	13.71	82.5
08/12/2009 14:31	57.5	0	17	16	7.2	12.85	82.6
08/12/2009 14:32	74.8	0	18	18	7.7	12.28	83.2
08/12/2009 14:33	57.8	0	12	11	7.4	12.76	82.8
08/12/2009 14:34	35.8	0	14	13	6.4	13.91	81.7
Raw Average =	54	0	17.6	17.0	7.2	12.8	82.5
O2 Corrected Avg. =	93	0	30	29			
Lbs./Hour Avg. =	22.78	0.00	4.52				
Period % Recovery =	95.7	95.7	95.7	95.7	100.0	95.7	100.0

Date/Time Printed: 08/12/2009 14:38

R#9

Economizer Rata Report

COVANTA ENERGY

Company: Covanta Huntington, Inc.
Report Name: UNIT #2 ECON RATA

Start of Report: 08/12/2009 14:46
End of Report: 08/12/2009 15:09

Validation: Valid Data Only

	SO2e	CO2e	O2e
Group#-Channel#	G25-C6	G25-C2	G25-C1
Long Descrip.	U-2 SO2 E	U-2 CO2 E	U-2 O2 Ec
Short Descrip.	SO2e	CO2e	O2e
Units	ppm	%	%
Range	0-500	0-20	0-25
08/12/2009 14:46	39	7.0	12.8
08/12/2009 14:47	39	7.2	12.5
08/12/2009 14:48	41	7.5	12.2
08/12/2009 14:49	41	8.0	11.6
08/12/2009 14:50	40	8.3	11.1
08/12/2009 14:51	37	8.3	11.2
08/12/2009 14:52	36	8.5	11.0
08/12/2009 14:53	33	8.4	11.0
08/12/2009 14:54	34	8.7	10.8
08/12/2009 14:55	33	8.8	10.6
08/12/2009 14:56	30	9.0	10.4
08/12/2009 14:57	30	9.1	10.3
08/12/2009 14:58	26	8.0	11.6
08/12/2009 14:59	24	7.8	11.9
08/12/2009 15:00	24	8.0	11.6
08/12/2009 15:01	23	8.3	11.2
08/12/2009 15:02	24	8.4	11.1
08/12/2009 15:03	25	8.7	10.8
08/12/2009 15:04	28	8.8	10.7
08/12/2009 15:05	27	8.5	11.1
08/12/2009 15:06	25	9.0	10.4
08/12/2009 15:07	28	9.3	10.1
08/12/2009 15:08	28	8.8	10.6
08/12/2009 15:09	28	9.1	10.3
Raw Average =	30	8.4	11.1
O2 Corrected Avg. =	44		
Period % Recovery =	100.0	100.0	100.0

Date/Time Printed: 08/12/2009 15:15

R#9

Stack Rata Report

COVANTA ENERGY

Company: Covanta Huntington, Inc.
Report Name: UNIT #2 STACK RATA

Start of Report: 08/12/2009 14:46
End of Report: 08/12/2009 15:09

Validation: Valid Data Only

	NOxs	SO2S	COlow	COhigh	CO2	O2	Steam Flow
Group#-Channel#	G25-C10	G25-C9	G25-C3	G25-C4	G25-C8	G25-C7	G25-C19
Long Descrip.	U-2 NOx S	U-2 SO2 S	U-2 CO St	U-2 CO St	U-2 CO2 S	U-2 O2 St	U-2 Steam
Short Descrip.	NOxs	SO2s	COs LoRng	COs HiRng	CO2s	O2s	Steam
Units	ppm	ppm	ppm	ppm	%	%	K#/Hr
Range	0-500	0-200	0-200	0-2000	0-20	0-25	0-100
08/12/2009 14:46	35.5	0	13	12	6.0	14.40	81.7
08/12/2009 14:47	43.5	0	21	20	6.3	14.05	80.2
08/12/2009 14:48	42.0	0	25	24	6.4	13.91	79.3
08/12/2009 14:49	54.8	0	25	25	6.6	13.59	79.1
08/12/2009 14:50	72.3	0	21	20	7.3	12.90	79.3
08/12/2009 14:51	66.8	0	21	21	7.3	12.89	79.5
08/12/2009 14:52	66.0	0	21	20	7.3	12.84	79.7
08/12/2009 14:53	64.3	1	18	17	7.3	12.78	80.1
08/12/2009 14:54	58.0	0	22	21	7.6	12.59	80.5
08/12/2009 14:55	67.8	0	15	15	7.7	12.38	81.2
08/12/2009 14:56	73.8	0	17	16	7.8	12.26	81.9
08/12/2009 14:57	70.0	0	18	17	7.9	12.23	82.3
08/12/2009 14:58	46.5	0	15	14	6.9	13.49	81.3
08/12/2009 14:59	46.0	0	21	21	6.8	13.49	80.5
08/12/2009 15:00	53.0	0	25	24	7.0	13.26	80.0
08/12/2009 15:01	58.5	0	25	24	7.3	12.91	79.9
08/12/2009 15:02	59.3	0	29	30	7.3	12.95	79.7
08/12/2009 15:03	68.0	0	23	23	7.6	12.50	80.1
08/12/2009 15:04	72.5	0	21	20	7.6	12.56	80.2
08/12/2009 15:05	63.8	0	24	24	7.4	12.84	80.0
08/12/2009 15:06	79.5	1	19	18	7.9	12.05	80.7
08/12/2009 15:07	78.5	0	17	17	8.0	12.14	81.0
08/12/2009 15:08	68.8	0	21	20	7.7	12.43	81.1
08/12/2009 15:09	86.8	0	20	19	8.0	12.09	81.6
Raw Average =	62	0	20.7	20.0	7.2	12.9	80.4
O2 Corrected Avg. =	108	0	35	34			
Lbs./Hour Avg. =	25.38	0.04	5.13				
Period % Recovery =	100.0	100.0	100.0	100.0	100.0	100.0	100.0

Date/Time Printed: 08/12/2009 15:15

Economizer Rata Report

COVANTA ENERGY

Company: Covanta Huntington, Inc.
Report Name: UNIT #2 ECON RATA

Start of Report: 08/12/2009 15:21
End of Report: 08/12/2009 15:44 **Validation:** Valid Data Only

	SO2e	CO2e	O2e
Group#-Channel#	G25-C6	G25-C2	G25-C1
Long Descrip.	U-2 SO2 E	U-2 CO2 E	U-2 O2 Ec
Short Descrip.	SO2e	CO2e	O2e
Units	ppm	%	%
Range	0-500	0-20	0-25
08/12/2009 15:21	37	7.8	11.9
08/12/2009 15:22	36	8.0	11.6
08/12/2009 15:23	40	9.0	10.4
08/12/2009 15:24	38	8.3	11.3
08/12/2009 15:25	37	8.0	11.6
08/12/2009 15:26	40	9.0	10.4
08/12/2009 15:27	39	8.3	11.2
08/12/2009 15:28	33	7.5	12.2
08/12/2009 15:29	37	8.4	11.2
08/12/2009 15:30	39	8.8	10.7
08/12/2009 15:31	39	8.9	10.7
08/12/2009 15:32	39	9.0	10.6
08/12/2009 15:33	40	8.9	10.6
08/12/2009 15:34	42	8.9	10.6
08/12/2009 15:35	45	9.1	10.4
08/12/2009 15:36	42	8.6	10.9
08/12/2009 15:37	45	9.2	10.3
08/12/2009 15:38	44	9.1	10.5
08/12/2009 15:39	44	8.6	11.0
08/12/2009 15:40	48	9.1	10.4
08/12/2009 15:41	53	9.2	10.2
08/12/2009 15:42	58	9.1	10.4
08/12/2009 15:43	58	8.2	11.3
08/12/2009 15:44	63	8.6	10.9
Raw Average =	43	8.6	10.8
O2 Corrected Avg. =	59		
Period % Recovery =	100.0	100.0	100.0

Date/Time Printed: 08/12/2009 16:05

Stack Rata Report

COVANTA ENERGY

Company: Covanta Huntington, Inc.
Report Name: UNIT #2 STACK RATA

Start of Report: 08/12/2009 15:21
End of Report: 08/12/2009 15:44

Validation: Valid Data Only

	NOxs	SO2S	COlow	COhigh	CO2	O2	Steam Flow
Group#-Channel#	G25-C10	G25-C9	G25-C3	G25-C4	G25-C8	G25-C7	G25-C19
Long Descrip.	U-2 NOx S	U-2 SO2 S	U-2 CO St	U-2 CO St	U-2 CO2 S	U-2 O2 St	U-2 Steam
Short Descrip.	NOxs	SO2s	COs LoRng	COs HiRng	CO2s	O2s	Steam
Units	ppm	ppm	ppm	ppm	%	%	K#/Hr
Range	0-500	0-200	0-200	0-2000	0-20	0-25	0-100
08/12/2009 15:21	38.3	1	8	7	6.7	13.65	83.5
08/12/2009 15:22	50.3	0	13	12	7.0	13.29	83.3
08/12/2009 15:23	69.8	0	16	15	7.7	12.36	83.6
08/12/2009 15:24	47.8	0	11	10	7.1	13.18	82.8
08/12/2009 15:25	41.8	0	14	14	7.1	13.05	82.9
08/12/2009 15:26	63.5	1	19	18	7.9	12.14	83.5
08/12/2009 15:27	45.3	0	13	12	7.2	13.23	82.7
08/12/2009 15:28	33.8	0	17	17	6.6	13.69	82.0
08/12/2009 15:29	45.0	0	29	30	7.4	12.81	82.0
08/12/2009 15:30	59.8	0	26	26	7.8	12.43	82.4
08/12/2009 15:31	64.3	0	22	21	7.7	12.56	82.5
08/12/2009 15:32	60.8	0	26	26	7.9	12.28	82.7
08/12/2009 15:33	61.0	1	26	26	7.8	12.48	82.5
08/12/2009 15:34	62.0	0	23	22	7.9	12.28	82.9
08/12/2009 15:35	64.5	0	19	19	7.8	12.43	82.9
08/12/2009 15:36	51.5	0	18	17	7.6	12.58	83.0
08/12/2009 15:37	59.5	0	24	24	8.1	12.09	83.3
08/12/2009 15:38	59.8	0	19	19	7.9	12.39	83.2
08/12/2009 15:39	50.8	0	15	14	7.5	12.75	83.0
08/12/2009 15:40	60.5	1	19	19	8.0	12.14	83.3
08/12/2009 15:41	68.8	0	21	21	8.0	12.05	83.6
08/12/2009 15:42	71.8	0	13	12	7.9	12.33	83.6
08/12/2009 15:43	51.8	0	14	13	7.2	13.10	83.1
08/12/2009 15:44	49.5	0	24	24	7.6	12.53	83.2
Raw Average =	55	0	18.7	18.2	7.5	12.6	82.9
O2 Corrected Avg. =	93	0	31	30			
Lbs./Hour Avg. =	22.49	0.09	4.61				
Period % Recovery =	100.0	100.0	100.0	100.0	100.0	100.0	100.0

Date/Time Printed: 08/12/2009 16:04

R#1

Economizer Rata Report

COVANTA ENERGY

Company: Covanta Huntington, Inc.
Report Name: UNIT #3 ECON RATA

Start of Report: 08/11/2009 08:55
End of Report: 08/11/2009 09:18

Validation: Valid Data Only

	SO2e	CO2e	O2e
Group#-Channel#	G38-C6	G38-C2	G38-C1
Long Descrip.	U-3 SO2 E	U-3 CO2 E	U-3 O2 Ec
Short Descrip.	SO2e	CO2e	O2e
Units	ppm	%	%
Range	0-500	0-20	0-25
08/11/2009 08:55	107	8.6	11.0
08/11/2009 08:56	109	8.4	11.2
08/11/2009 08:57	110	8.1	11.6
08/11/2009 08:58	122	8.6	11.1
08/11/2009 08:59	117	8.3	11.5
08/11/2009 09:00	114	8.2	11.7
08/11/2009 09:01	121	7.9	11.9
08/11/2009 09:02	125	8.2	11.7
08/11/2009 09:03	123	8.1	11.7
08/11/2009 09:04	137	8.3	11.5
08/11/2009 09:05	140	8.0	11.8
08/11/2009 09:06	125	8.1	11.7
08/11/2009 09:07	122	8.4	11.3
08/11/2009 09:08	111	8.4	11.4
08/11/2009 09:09	103	8.6	11.2
08/11/2009 09:10	96	8.4	11.3
08/11/2009 09:11	88	8.5	11.2
08/11/2009 09:12	83	8.6	11.1
08/11/2009 09:13	75	8.3	11.5
08/11/2009 09:14	72	8.5	11.1
08/11/2009 09:15	67	8.3	11.3
08/11/2009 09:16	58	8.2	11.5
08/11/2009 09:17	56	8.3	11.4
08/11/2009 09:18	53	8.3	11.3
Raw Average =	101	8.3	11.4
O2 Corrected Avg. =	148		
Period % Recovery =	100.0	100.0	100.0

Date/Time Printed: 08/11/2009 09:21

R#1

Stack Rata Report

COVANTA ENERGY

Company: Covanta Huntington, Inc.
Report Name: UNIT #3 STACK RATA

Start of Report: 08/11/2009 08:55
End of Report: 08/11/2009 09:18

Validation: Valid Data Only

	NOxs	SO2S	COlow	COhigh	CO2	O2	Steam Flow
Group#-Channel#	G38-C10	G38-C9	G38-C3	G38-C4	G38-C8	G38-C7	G38-C19
Long Descrip.	U-3 NOx S	U-3 SO2 S	U-3 CO St	U-3 CO St	U-3 CO2 S	U-3 O2 St	U-3 Steam
Short Descrip.	NOxs	SO2s	COs LoRng	COs HiRng	CO2s	O2s	Steam
Units	ppm	ppm	ppm	ppm	%	%	K#/Hr
Range	0-500	0-200	0-200	0-2000	0-20	0-25	0-100
08/11/2009 08:55	78.8	0	10	9	7.8	12.25	83.0
08/11/2009 08:56	67.8	0	8	8	7.7	12.51	82.0
08/11/2009 08:57	54.0	0	10	10	7.4	12.79	82.0
08/11/2009 08:58	68.3	0	12	12	7.8	12.36	82.0
08/11/2009 08:59	58.5	0	12	11	7.5	12.74	81.0
08/11/2009 09:00	58.5	0	11	11	7.4	12.93	80.0
08/11/2009 09:01	57.5	0	16	16	7.3	13.09	80.0
08/11/2009 09:02	57.5	0	20	19	7.3	12.94	79.0
08/11/2009 09:03	52.0	0	21	21	7.4	12.93	78.0
08/11/2009 09:04	60.5	0	23	21	7.5	12.74	78.0
08/11/2009 09:05	61.8	0	20	19	7.3	12.99	78.0
08/11/2009 09:06	58.0	0	19	19	7.4	12.83	78.0
08/11/2009 09:07	72.0	0	20	19	7.7	12.54	78.0
08/11/2009 09:08	62.8	0	21	20	7.6	12.61	78.0
08/11/2009 09:09	63.0	0	22	21	7.8	12.39	78.0
08/11/2009 09:10	67.3	0	19	17	7.7	12.51	78.0
08/11/2009 09:11	71.8	0	17	16	7.8	12.39	78.0
08/11/2009 09:12	75.5	0	16	15	7.9	12.30	78.0
08/11/2009 09:13	62.3	0	18	18	7.5	12.61	79.0
08/11/2009 09:14	63.8	0	17	16	7.7	12.33	79.0
08/11/2009 09:15	68.8	0	13	13	7.6	12.56	79.0
08/11/2009 09:16	64.5	0	16	16	7.4	12.66	79.0
08/11/2009 09:17	66.0	0	15	14	7.5	12.61	79.0
08/11/2009 09:18	59.3	0	16	16	7.5	12.54	79.0
Raw Average =	63	0	16.3	15.7	7.5	12.6	79.2
O2 Corrected Avg. =	107	0	27	26			
Lbs./Hour Avg. =	24.67	0.00	3.84				
Period % Recovery =	100.0	100.0	100.0	100.0	100.0	100.0	100.0

Date/Time Printed: 08/11/2009 09:22

R#2

Economizer Rata Report

COVANTA ENERGY

Company: Covanta Huntington, Inc.
Report Name: UNIT #3 ECON RATA

Start of Report: 08/11/2009 10:12
End of Report: 08/11/2009 10:35

Validation: Valid Data Only

	SO2e		CO2e	O2e	
Group#-Channel#	G38-C6		G38-C2	G38-C1	
Long Descrip.	U-3 SO2 E		U-3 CO2 E	U-3 O2 Ec	
Short Descrip.	SO2e		CO2e	O2e	
Units	ppm		%	%	
Range	0-500		0-20	0-25	
08/11/2009 10:12	119		8.1	11.6	
08/11/2009 10:13	123		7.9	11.8	
08/11/2009 10:14	131		8.0	11.6	
08/11/2009 10:15	138		7.9	11.8	
08/11/2009 10:16	150		7.9	11.8	
08/11/2009 10:17	149		8.3	11.4	
08/11/2009 10:18	150		9.4	10.2	
08/11/2009 10:19	128		8.4	11.3	
08/11/2009 10:20	122		8.4	11.3	
08/11/2009 10:21	124		9.2	10.3	
08/11/2009 10:22	116		8.5	11.1	
08/11/2009 10:23	114		8.4	11.3	
08/11/2009 10:24	109		8.6	11.0	
08/11/2009 10:25	101		8.3	11.4	
08/11/2009 10:26	99		8.5	11.1	
08/11/2009 10:27	102		9.2	10.3	
08/11/2009 10:28	89		8.6	11.0	
08/11/2009 10:29	87		8.4	11.2	
08/11/2009 10:31			7.5		
08/11/2009 10:32	99	<	8.1	11.6	<
08/11/2009 10:33	95		7.9	11.8	
08/11/2009 10:34	91		8.2	11.5	
08/11/2009 10:35	93		8.6	11.0	
Raw Average =	114		8.3	11.2	
O2 Corrected Avg. =	165				
Period % Recovery =	95.7		100.0	95.7	

Date/Time Printed: 08/11/2009 10:38

R#2

Stack Rata Report

COVANTA ENERGY

Company: Covanta Huntington, Inc.
Report Name: UNIT #3 STACK RATA

Start of Report: 08/11/2009 10:12
End of Report: 08/11/2009 10:35 **Validation:** Valid Data Only

	NOxs	SO2S	COlow	COhigh	CO2	O2	Steam Flow
Group#-Channel#	G38-C10	G38-C9	G38-C3	G38-C4	G38-C8	G38-C7	G38-C19
Long Descrip.	U-3 NOx S	U-3 SO2 S	U-3 CO St	U-3 CO St	U-3 CO2 S	U-3 O2 St	U-3 Steam
Short Descrip.	NOxs	SO2s	COs LoRng	COs HiRng	CO2s	O2s	Steam
Units	ppm	ppm	ppm	ppm	%	%	K#/Hr
Range	0-500	0-200	0-200	0-2000	0-20	0-25	0-100
08/11/2009 10:12	56.5	0	14	14	7.4	12.83	80.0
08/11/2009 10:13	54.0	0	17	17	7.2	12.95	79.0
08/11/2009 10:14	53.3	0	17	17	7.3	12.88	79.0
08/11/2009 10:15	50.0	0	19	19	7.2	13.04	78.0
08/11/2009 10:16	52.5	1	21	20	7.2	13.03	78.0
08/11/2009 10:17	56.3	2	23	23	7.5	12.54	79.0
08/11/2009 10:18	93.8	5	22	19	8.6	11.54	80.0
08/11/2009 10:19	72.3	3	13	12	7.7	12.56	79.0
08/11/2009 10:20	61.3	2	15	16	7.6	12.45	80.0
08/11/2009 10:21	65.3	1	18	17	8.4	11.65	81.0
08/11/2009 10:22	54.5	1	13	12	7.8	12.36	81.0
08/11/2009 10:23	50.3	1	17	17	7.6	12.49	80.0
08/11/2009 10:24	63.0	0	15	13	7.8	12.31	80.0
08/11/2009 10:25	56.5	0	12	12	7.5	12.61	80.0
08/11/2009 10:26	64.5	0	15	15	7.7	12.31	81.0
08/11/2009 10:27	84.3	0	17	15	8.3	11.61	81.0
08/11/2009 10:28	77.0	0	9	8	7.8	12.24	82.0
08/11/2009 10:29	73.8	0	9	8	7.6	12.43	82.0
08/11/2009 10:30							
08/11/2009 10:31							
08/11/2009 10:32	58.3 <	0 <	12 <	12 <	7.3	12.95 <	81.0
08/11/2009 10:33	52.8	0	14	15	7.1	13.03	81.0
08/11/2009 10:34	52.8	0	18	17	7.4	12.70	81.0
08/11/2009 10:35	62.3	0	17	16	7.8	12.25	81.0
Raw Average =	62	0	15.7	15.1	7.5	12.4	80.3
O2 Corrected Avg. =	102	1	26	25			
Lbs./Hour Avg. =	24.24	0.39	3.74				
Period % Recovery =	95.7	95.7	95.7	95.7	100.0	95.7	100.0

R43

Economizer Rata Report

COVANTA ENERGY

Company: Covanta Huntington, Inc.
Report Name: UNIT #3 ECON RATA

Start of Report: 08/11/2009 11:23
End of Report: 08/11/2009 11:46 **Validation:** Valid Data Only

	SO2e		CO2e	O2e	
Group#-Channel#	G38-C6		G38-C2	G38-C1	
Long Descrip.	U-3 SO2 E		U-3 CO2 E	U-3 O2 Ec	
Short Descrip.	SO2e		CO2e	O2e	
Units	ppm		%	%	
Range	0-500		0-20	0-25	
08/11/2009 11:23	48		8.4	11.2	
08/11/2009 11:24	48		8.7	10.9	
08/11/2009 11:25	50		8.7	10.8	
08/11/2009 11:26	52		8.5	11.0	
08/11/2009 11:27	53		8.6	10.9	
08/11/2009 11:28	53		8.6	10.8	
08/11/2009 11:29	52		8.7	10.8	
08/11/2009 11:31			7.7		
08/11/2009 11:32	45	<	8.2	11.4	<
08/11/2009 11:33	47		8.1	11.4	
08/11/2009 11:34	49		8.4	11.0	
08/11/2009 11:35	52		8.3	11.0	
08/11/2009 11:36	48		8.0	11.5	
08/11/2009 11:37	44		8.1	11.3	
08/11/2009 11:38	43		8.3	11.1	
08/11/2009 11:39	44		8.1	11.3	
08/11/2009 11:40	46		8.1	11.5	
08/11/2009 11:41	47		8.2	11.3	
08/11/2009 11:42	50		8.8	10.6	
08/11/2009 11:43	46		8.7	10.6	
08/11/2009 11:44	38		7.8	11.8	
08/11/2009 11:45	38		7.5	12.1	
08/11/2009 11:46	40		7.7	11.9	
Raw Average =	46		8.2	11.1	
O2 Corrected Avg. =	67				
Period % Recovery =	95.7		100.0	95.7	

Date/Time Printed: 08/11/2009 11:50

R#3

Stack Rata Report

COVANTA ENERGY

Company: Covanta Huntington, Inc.
Report Name: UNIT #3 STACK RATA

Start of Report: 08/11/2009 11:23
End of Report: 08/11/2009 11:46

Validation: Valid Data Only

	NOxs	SO2S	COlow	COhigh	CO2	O2	Steam Flow
Group#-Channel#	G38-C10	G38-C9	G38-C3	G38-C4	G38-C8	G38-C7	G38-C19
Long Descrip.	U-3 NOx S	U-3 SO2 S	U-3 CO St	U-3 CO St	U-3 CO2 S	U-3 O2 St	U-3 Steam
Short Descrip.	NOxs	SO2s	COs LoRng	COs HiRng	CO2s	O2s	Steam
Units	ppm	ppm	ppm	ppm	%	%	K#/Hr
Range	0-500	0-200	0-200	0-2000	0-20	0-25	0-100
08/11/2009 11:23	73.0	0	10	10	7.6	12.44	83.0
08/11/2009 11:24	89.3	0	9	9	7.9	12.05	83.0
08/11/2009 11:25	92.0	0	10	9	7.9	12.06	83.0
08/11/2009 11:26	83.0	0	8	7	7.8	12.24	83.0
08/11/2009 11:27	80.8	0	8	8	7.8	12.05	83.0
08/11/2009 11:28	84.0	0	8	8	7.9	12.09	83.0
08/11/2009 11:29	86.0	0	8	7	7.9	12.01	83.0
08/11/2009 11:30							
08/11/2009 11:31							
08/11/2009 11:32	57.0 <	0 <	7 <	7 <	7.5	12.60 <	83.0
08/11/2009 11:33	54.0	0	7	7	7.4	12.59	83.0
08/11/2009 11:34	57.3	0	8	8	7.6	12.25	83.0
08/11/2009 11:35	58.0	0	7	6	7.6	12.26	83.0
08/11/2009 11:36	43.0	0	6	6	7.2	12.66	82.0
08/11/2009 11:37	46.3	0	10	10	7.4	12.50	82.0
08/11/2009 11:38	58.0	0	9	7	7.6	12.33	82.0
08/11/2009 11:39	49.0	0	8	7	7.4	12.51	82.0
08/11/2009 11:40	44.3	0	10	9	7.4	12.61	82.0
08/11/2009 11:41	48.5	0	9	8	7.4	12.45	82.0
08/11/2009 11:42	74.8	0	8	8	7.9	11.79	83.0
08/11/2009 11:43	82.8	0	8	6	8.1	11.88	83.0
08/11/2009 11:44	41.0	0	6	5	7.1	12.94	82.0
08/11/2009 11:45	33.0	0	9	9	6.8	13.26	82.0
08/11/2009 11:46	38.5	0	13	13	7.0	13.01	81.0
Raw Average =	62	0	8.4	7.9	7.5	12.3	82.5
O2 Corrected Avg. =	101	0	13	12			
Lbs./Hour Avg. =	25.27	0.00	2.08				
Period % Recovery =	95.7	95.7	95.7	95.7	100.0	95.7	100.0

Date/Time Printed: 08/11/2009 11:50

R#4

Economizer Rata Report

COVANTA ENERGY

Company: Covanta Huntington, Inc.
Report Name: UNIT #3 ECON RATA

Start of Report: 08/11/2009 12:00
End of Report: 08/11/2009 12:23

Validation: Valid Data Only

	SO2e	CO2e	O2e
Group#-Channel#	G38-C6	G38-C2	G38-C1
Long Descrip.	U-3 SO2 E	U-3 CO2 E	U-3 O2 Ec
Short Descrip.	SO2e	CO2e	O2e
Units	ppm	%	%
Range	0-500	0-20	0-25
08/11/2009 12:00	38	7.6	12.1
08/11/2009 12:01	39	7.7	12.1
08/11/2009 12:02	43	8.6	11.1
08/11/2009 12:03	46	8.8	10.8
08/11/2009 12:04	45	8.4	11.2
08/11/2009 12:05	41	7.7	12.0
08/11/2009 12:06	42	8.1	11.6
08/11/2009 12:07	47	8.0	11.7
08/11/2009 12:08	45	7.7	12.0
08/11/2009 12:09	49	8.4	11.3
08/11/2009 12:10	50	8.4	11.2
08/11/2009 12:11	47	8.2	11.3
08/11/2009 12:12	45	8.1	11.4
08/11/2009 12:13	42	8.1	11.7
08/11/2009 12:14	50	8.9	10.6
08/11/2009 12:15	45	8.8	10.7
08/11/2009 12:16	44	8.7	10.8
08/11/2009 12:17	40	8.6	10.9
08/11/2009 12:18	39	8.7	10.8
08/11/2009 12:19	38	8.4	11.1
08/11/2009 12:20	35	8.5	11.0
08/11/2009 12:21	35	8.7	10.8
08/11/2009 12:22	35	9.0	10.3
08/11/2009 12:23	34	9.1	10.2
Raw Average =	42	8.3	11.2
O2 Corrected Avg. =	60		
Period % Recovery =	100.0	100.0	100.0

Date/Time Printed: 08/11/2009 12:32

R #4

Stack Rata Report

COVANTA ENERGY

Company: Covanta Huntington, Inc.
Report Name: UNIT #3 STACK RATA

Start of Report: 08/11/2009 12:00
End of Report: 08/11/2009 12:23

Validation: Valid Data Only

	NOxs	SO2S	COlow	COhigh	CO2	O2	Steam Flow
Group#-Channel#	G38-C10	G38-C9	G38-C3	G38-C4	G38-C8	G38-C7	G38-C19
Long Descrip.	U-3 NOx S	U-3 SO2 S	U-3 CO St	U-3 CO St	U-3 CO2 S	U-3 O2 St	U-3 Steam
Short Descrip.	NOxs	SO2s	COs LoRng	COs HiRng	CO2s	O2s	Steam
Units	ppm	ppm	ppm	ppm	%	%	K#/Hr
Range	0-500	0-200	0-200	0-2000	0-20	0-25	0-100
08/11/2009 12:00	61.8	0	11	11	7.0	13.28	80.0
08/11/2009 12:01	56.8	0	17	17	7.0	13.19	80.0
08/11/2009 12:02	69.0	0	20	19	7.7	12.23	80.0
08/11/2009 12:03	81.0	0	13	12	8.0	12.05	81.0
08/11/2009 12:04	76.8	0	11	11	7.6	12.46	80.0
08/11/2009 12:05	61.0	0	16	18	7.1	13.10	80.0
08/11/2009 12:06	63.8	0	21	18	7.3	12.79	80.0
08/11/2009 12:07	64.0	0	16	15	7.3	12.89	79.0
08/11/2009 12:08	55.8	0	18	18	6.9	13.13	79.0
08/11/2009 12:09	62.5	0	21	20	7.5	12.48	79.0
08/11/2009 12:10	66.8	0	19	18	7.6	12.40	79.0
08/11/2009 12:11	56.0	0	18	17	7.4	12.55	79.0
08/11/2009 12:12	49.8	0	18	17	7.3	12.69	79.0
08/11/2009 12:13	48.0	0	20	20	7.2	12.78	79.0
08/11/2009 12:14	56.8	0	21	19	8.0	11.83	79.0
08/11/2009 12:15	63.0	0	17	16	7.9	11.85	80.0
08/11/2009 12:16	72.5	0	13	13	7.9	11.96	80.0
08/11/2009 12:17	72.8	0	12	12	7.7	12.09	80.0
08/11/2009 12:18	74.0	0	13	12	7.9	11.91	81.0
08/11/2009 12:19	76.5	0	12	11	7.6	12.29	81.0
08/11/2009 12:20	77.8	0	11	11	7.6	12.19	81.0
08/11/2009 12:21	84.3	0	12	11	7.8	11.93	82.0
08/11/2009 12:22	104.3	0	10	9	8.1	11.55	83.0
08/11/2009 12:23	94.8	0	10	9	8.2	11.45	84.0
Raw Average =	68	0	15.4	14.7	7.5	12.3	80.2
O2 Corrected Avg. =	112	0	25	24			
Lbs./Hour Avg. =	26.90	0.00	3.67				
Period % Recovery =	100.0	100.0	100.0	100.0	100.0	100.0	100.0

Date/Time Printed: 08/11/2009 12:30

R #5

Economizer Rata Report

COVANTA ENERGY

Company: Covanta Huntington, Inc.
Report Name: UNIT #3 ECON RATA

Start of Report: 08/11/2009 12:38
End of Report: 08/11/2009 13:01

Validation: Valid Data Only

	SO2e	CO2e	O2e
Group#-Channel#	G38-C6	G38-C2	G38-C1
Long Descrip.	U-3 SO2 E	U-3 CO2 E	U-3 O2 Ec
Short Descrip.	SO2e	CO2e	O2e
Units	ppm	%	%
Range	0-500	0-20	0-25
08/11/2009 12:38	49	8.1	11.4
08/11/2009 12:39	48	8.1	11.5
08/11/2009 12:40	47	8.2	11.4
08/11/2009 12:41	46	8.5	11.0
08/11/2009 12:42	43	7.8	11.7
08/11/2009 12:43	41	8.0	11.6
08/11/2009 12:44	43	9.4	10.1
08/11/2009 12:45	41	8.8	10.5
08/11/2009 12:46	35	7.7	11.9
08/11/2009 12:47	35	7.5	12.2
08/11/2009 12:48	36	7.7	12.0
08/11/2009 12:49	36	7.6	12.2
08/11/2009 12:50	37	8.0	11.7
08/11/2009 12:51	41	8.2	11.5
08/11/2009 12:52	42	8.3	11.4
08/11/2009 12:53	40	8.2	11.5
08/11/2009 12:54	36	7.2	12.6
08/11/2009 12:55	34	7.3	12.6
08/11/2009 12:56	37	9.0	10.8
08/11/2009 12:57	54	10.7	8.5
08/11/2009 12:58	43	8.5	11.1
08/11/2009 12:59	35	7.4	12.3
08/11/2009 13:00	31	7.3	12.5
08/11/2009 13:01	33	8.5	11.1
Raw Average =	40	8.1	11.4
O2 Corrected Avg. =	59		
Period % Recovery =	100.0	100.0	100.0

Date/Time Printed: 08/11/2009 13:06

R/S

Stack Rata Report

COVANTA ENERGY

Company: Covanta Huntington, Inc.
Report Name: UNIT #3 STACK RATA

Start of Report: 08/11/2009 12:38
End of Report: 08/11/2009 13:01

Validation: Valid Data Only

	NOxs	SO2S	COlow	COhigh	CO2	O2	Steam Flow
Group#-Channel#	G38-C10	G38-C9	G38-C3	G38-C4	G38-C8	G38-C7	G38-C19
Long Descrip.	U-3 NOx S	U-3 SO2 S	U-3 CO St	U-3 CO St	U-3 CO2 S	U-3 O2 St	U-3 Steam
Short Descrip.	NOxs	SO2s	COs LoRng	COs HiRng	CO2s	O2s	Steam
Units	ppm	ppm	ppm	ppm	%	%	K#/Hr
Range	0-500	0-200	0-200	0-2000	0-20	0-25	0-100
08/11/2009 12:38	66.8	0	12	11	7.3	12.59	82.0
08/11/2009 12:39	73.0	0	12	12	7.3	12.64	82.0
08/11/2009 12:40	66.5	0	11	10	7.4	12.53	82.0
08/11/2009 12:41	78.3	0	11	10	7.7	12.23	82.0
08/11/2009 12:42	60.5	0	13	13	7.2	12.88	82.0
08/11/2009 12:43	57.5	0	16	16	7.3	12.69	82.0
08/11/2009 12:44	119.8	0	18	16	8.5	11.24	83.0
08/11/2009 12:45	128.0	0	8	6	8.1	11.81	83.0
08/11/2009 12:46	66.5	0	6	6	7.1	13.08	83.0
08/11/2009 12:47	47.8	0	11	11	6.8	13.34	82.0
08/11/2009 12:48	47.3	0	15	14	7.0	13.13	80.0
08/11/2009 12:49	45.5	0	15	15	6.9	13.30	80.0
08/11/2009 12:50	49.8	0	19	19	7.3	12.80	80.0
08/11/2009 12:51	49.3	0	20	19	7.5	12.64	80.0
08/11/2009 12:52	46.3	0	22	21	7.6	12.53	80.0
08/11/2009 12:53	45.5	0	18	17	7.5	12.73	79.0
08/11/2009 12:54	40.0	0	18	18	6.6	13.70	78.0
08/11/2009 12:55	40.8	0	23	22	6.6	13.65	77.0
08/11/2009 12:56	54.8	0	32	33	8.0	11.78	79.0
08/11/2009 12:57	113.5	0	25	20	9.8	9.95	81.0
08/11/2009 12:58	71.8	0	9	8	7.9	12.31	81.0
08/11/2009 12:59	47.0	0	11	12	6.8	13.50	80.0
08/11/2009 13:00	45.5	0	21	20	6.6	13.61	79.0
08/11/2009 13:01	54.8	0	25	24	7.7	12.25	80.0
Raw Average =	63	0	16.2	15.5	7.4	12.6	80.7
O2 Corrected Avg. =	106	0	27	26			
Lbs./Hour Avg. =	25.31	0.00	3.97				
Period % Recovery =	100.0	100.0	100.0	100.0	100.0	100.0	100.0

Date/Time Printed: 08/11/2009 13:07

0 187

R#6

Economizer Rata Report

COVANTA ENERGY

Company: Covanta Huntington, Inc.
Report Name: UNIT #3 ECON RATA

Start of Report: 08/11/2009 13:17
End of Report: 08/11/2009 13:40 **Validation:** Valid Data Only

	SO2e		CO2e	O2e	
Group#-Channel#	G38-C6		G38-C2	G38-C1	
Long Descrip.	U-3 SO2 E		U-3 CO2 E	U-3 O2 Ec	
Short Descrip.	SO2e		CO2e	O2e	
Units	ppm		%	%	
Range	0-500		0-20	0-25	
08/11/2009 13:17	31		8.5	11.2	
08/11/2009 13:18	30		8.2	11.5	
08/11/2009 13:19	35		8.5	11.1	
08/11/2009 13:20	39		8.4	11.3	
08/11/2009 13:21	41		8.9	10.8	
08/11/2009 13:22	47		9.1	10.6	
08/11/2009 13:23	50		9.2	10.3	
08/11/2009 13:24	48		8.5	11.1	
08/11/2009 13:25	54		8.6	11.0	
08/11/2009 13:26	59		8.2	11.5	
08/11/2009 13:27	58		8.3	11.4	
08/11/2009 13:28	58		8.7	11.0	
08/11/2009 13:29	61		8.5	11.1	
08/11/2009 13:31			7.6		
08/11/2009 13:32	48	<	8.6	11.4	<
08/11/2009 13:33	49		7.9	11.8	
08/11/2009 13:34	52		8.2	11.4	
08/11/2009 13:35	50		8.4	11.3	
08/11/2009 13:36	49		8.2	11.5	
08/11/2009 13:37	46		7.9	11.9	
08/11/2009 13:38	47		8.3	11.5	
08/11/2009 13:39	50		8.5	11.2	
08/11/2009 13:40	47		8.2	11.4	
Raw Average =	47		8.4	11.2	
O2 Corrected Avg. =	68				
Period % Recovery =	95.7		100.0	95.7	

Date/Time Printed: 08/11/2009 13:45

R #6

Stack Rata Report

COVANTA ENERGY

Company: Covanta Huntington, Inc.
Report Name: UNIT #3 STACK RATA

Start of Report: 08/11/2009 13:17
End of Report: 08/11/2009 13:40 **Validation:** Valid Data Only

	NOxs	SO2S	COlow	COhigh	CO2	O2	Steam Flow
Group#-Channel#	G38-C10	G38-C9	G38-C3	G38-C4	G38-C8	G38-C7	G38-C19
Long Descrip.	U-3 NOx S	U-3 SO2 S	U-3 CO St	U-3 CO St	U-3 CO2 S	U-3 O2 St	U-3 Steam
Short Descrip.	NOxs	SO2s	COs LoRng	COs HiRng	CO2s	O2s	Steam
Units	ppm	ppm	ppm	ppm	%	%	K#/Hr
Range	0-500	0-200	0-200	0-2000	0-20	0-25	0-100
08/11/2009 13:17	75.8	0	15	15	7.7	12.31	81.0
08/11/2009 13:18	67.8	0	15	13	7.5	12.56	81.0
08/11/2009 13:19	74.0	0	14	13	7.8	12.26	81.0
08/11/2009 13:20	69.3	0	15	15	7.7	12.41	81.0
08/11/2009 13:21	79.5	0	23	23	8.1	11.93	82.0
08/11/2009 13:22	95.3	0	22	19	8.3	11.71	83.0
08/11/2009 13:23	107.3	0	15	14	8.4	11.55	83.0
08/11/2009 13:24	73.8	0	13	12	7.8	12.28	83.0
08/11/2009 13:25	71.5	0	12	12	7.8	12.29	83.0
08/11/2009 13:26	58.3	0	13	12	7.4	12.69	83.0
08/11/2009 13:27	58.3	0	13	12	7.5	12.60	83.0
08/11/2009 13:28	70.5	0	14	14	7.9	12.14	83.0
08/11/2009 13:29	67.3	0	12	11	7.8	12.31	83.0
08/11/2009 13:30							
08/11/2009 13:31							
08/11/2009 13:32	66.3	< 0	< 8	< 7	< 7.9	12.68	< 83.0
08/11/2009 13:33	45.3	0	8	8	7.2	13.00	83.0
08/11/2009 13:34	47.3	0	12	12	7.5	12.64	82.0
08/11/2009 13:35	51.8	0	16	15	7.6	12.49	82.0
08/11/2009 13:36	43.8	0	13	12	7.5	12.70	81.0
08/11/2009 13:37	32.3	0	16	17	7.2	13.01	80.0
08/11/2009 13:38	34.3	0	21	20	7.5	12.65	80.0
08/11/2009 13:39	46.8	0	20	20	7.7	12.36	80.0
08/11/2009 13:40	53.8	0	22	20	7.6	12.60	79.0
Raw Average =	63	0	15.0	14.3	7.6	12.4	81.9
O2 Corrected Avg. =	103	0	24	23			
Lbs./Hour Avg. =	24.87	0.00	3.61				
Period % Recovery =	95.7	95.7	95.7	95.7	100.0	95.7	100.0

Date/Time Printed: 08/11/2009 13:44

R#7

Economizer Rata Report

COVANTA ENERGY

Company: Covanta Huntington, Inc.
Report Name: UNIT #3 ECON RATA

Start of Report: 08/11/2009 13:52
End of Report: 08/11/2009 14:15 **Validation:** Valid Data Only

	SO2e	CO2e	O2e
Group#-Channel#	G38-C6	G38-C2	G38-C1
Long Descrip.	U-3 SO2 E	U-3 CO2 E	U-3 O2 Ec
Short Descrip.	SO2e	CO2e	O2e
Units	ppm	%	%
Range	0-500	0-20	0-25
08/11/2009 13:52	37	8.3	11.5
08/11/2009 13:53	38	8.7	11.1
08/11/2009 13:54	38	9.2	10.5
08/11/2009 13:55	38	9.0	10.8
08/11/2009 13:56	36	9.2	10.5
08/11/2009 13:57	37	9.2	10.5
08/11/2009 13:58	37	9.2	10.5
08/11/2009 13:59	38	9.2	10.5
08/11/2009 14:00	49	9.7	9.9
08/11/2009 14:01	43	9.2	10.4
08/11/2009 14:02	40	9.2	10.4
08/11/2009 14:03	35	9.0	10.6
08/11/2009 14:04	31	9.3	10.3
08/11/2009 14:05	30	8.9	10.7
08/11/2009 14:06	28	8.7	11.0
08/11/2009 14:07	30	8.9	10.7
08/11/2009 14:08	30	8.8	10.8
08/11/2009 14:09	29	9.1	10.5
08/11/2009 14:10	30	9.2	10.3
08/11/2009 14:11	31	9.0	10.5
08/11/2009 14:12	30	8.7	10.9
08/11/2009 14:13	29	9.0	10.5
08/11/2009 14:14	30	9.0	10.5
08/11/2009 14:15	27	8.8	10.8
Raw Average =	34	9.0	10.6
O2 Corrected Avg. =	46		
Period % Recovery =	100.0	100.0	100.0

Date/Time Printed: 08/11/2009 14:17

Stack Rata Report

COVANTA ENERGY

Company: Covanta Huntington, Inc.
Report Name: UNIT #3 STACK RATA

Start of Report: 08/11/2009 13:52
End of Report: 08/11/2009 14:15 **Validation:** Valid Data Only

	NOxs	SO2S	COlow	COhigh	CO2	O2	Steam Flow
Group#-Channel#	G38-C10	G38-C9	G38-C3	G38-C4	G38-C8	G38-C7	G38-C19
Long Descrip.	U-3 NOx S	U-3 SO2 S	U-3 CO St	U-3 CO St	U-3 CO2 S	U-3 O2 St	U-3 Steam
Short Descrip.	NOxs	SO2s	COs LoRng	COs HiRng	CO2s	O2s	Steam
Units	ppm	ppm	ppm	ppm	%	%	K#/Hr
Range	0-500	0-200	0-200	0-2000	0-20	0-25	0-100
08/11/2009 13:52	46.0	0	18	18	7.5	12.61	78.0
08/11/2009 13:53	53.5	0	21	20	7.9	12.26	78.0
08/11/2009 13:54	61.8	0	20	19	8.3	11.71	78.0
08/11/2009 13:55	57.3	0	18	18	8.2	11.94	78.0
08/11/2009 13:56	60.5	0	18	17	8.3	11.73	79.0
08/11/2009 13:57	66.5	0	18	16	8.4	11.70	79.0
08/11/2009 13:58	82.8	0	12	11	8.3	11.71	79.0
08/11/2009 13:59	76.5	0	13	14	8.3	11.63	80.0
08/11/2009 14:00	77.0	0	15	13	8.8	11.24	80.0
08/11/2009 14:01	77.8	0	7	7	8.4	11.58	81.0
08/11/2009 14:02	80.5	0	10	11	8.4	11.69	81.0
08/11/2009 14:03	68.5	0	12	12	8.2	11.81	81.0
08/11/2009 14:04	73.5	0	14	13	8.4	11.53	81.0
08/11/2009 14:05	78.0	0	11	10	8.2	11.89	81.0
08/11/2009 14:06	75.3	0	10	10	7.9	12.13	81.0
08/11/2009 14:07	81.3	0	11	10	8.1	11.86	81.0
08/11/2009 14:08	75.5	0	13	13	8.1	11.98	82.0
08/11/2009 14:09	78.8	0	18	18	8.3	11.69	82.0
08/11/2009 14:10	80.0	0	15	13	8.4	11.54	82.0
08/11/2009 14:11	80.5	0	12	11	8.2	11.70	82.0
08/11/2009 14:12	68.8	0	13	12	7.9	12.10	82.0
08/11/2009 14:13	63.3	0	15	15	8.2	11.71	83.0
08/11/2009 14:14	69.5	0	15	14	8.3	11.68	83.0
08/11/2009 14:15	63.8	0	10	9	8.0	11.98	82.0
Raw Average =	70	0	14.1	13.5	8.2	11.8	80.5
O2 Corrected Avg. =	108	0	21	20			
Lbs./Hour Avg. =	25.62	0.00	3.11				
Period % Recovery =	100.0	100.0	100.0	100.0	100.0	100.0	100.0

Date/Time Printed: 08/11/2009 14:18

Economizer Rata Report

Company: Covanta Huntington, Inc.
Report Name: UNIT #3 ECON RATA

Start of Report: 08/11/2009 14:28
End of Report: 08/11/2009 14:51 **Validation:** Valid Data Only

	SO2e		CO2e	O2e	
Group#-Channel#	G38-C6		G38-C2	G38-C1	
Long Descrip.	U-3 SO2 E		U-3 CO2 E	U-3 O2 Ec	
Short Descrip.	SO2e		CO2e	O2e	
Units	ppm		%	%	
Range	0-500		0-20	0-25	
08/11/2009 14:28	25		8.1	11.5	
08/11/2009 14:29	26		8.1	11.6	
08/11/2009 14:31			7.8		
08/11/2009 14:32	31	<	8.4	11.1	<
08/11/2009 14:33	32		8.5	11.1	
08/11/2009 14:34	32		8.5	11.1	
08/11/2009 14:35	31		8.6	11.0	
08/11/2009 14:36	29		8.8	10.8	
08/11/2009 14:37	28		8.5	11.1	
08/11/2009 14:38	29		8.6	11.0	
08/11/2009 14:39	27		8.3	11.3	
08/11/2009 14:40	27		8.5	11.1	
08/11/2009 14:41	26		8.4	11.3	
08/11/2009 14:42	25		8.7	10.9	
08/11/2009 14:43	23		8.5	11.1	
08/11/2009 14:44	22		8.5	11.0	
08/11/2009 14:45	22		8.4	11.3	
08/11/2009 14:46	24		8.9	10.6	
08/11/2009 14:47	30		8.7	10.8	
08/11/2009 14:48	36		8.5	11.0	
08/11/2009 14:49	37		8.8	10.8	
08/11/2009 14:50	37		9.1	10.3	
08/11/2009 14:51	37		9.0	10.5	
Raw Average =	28		8.5	11.0	
O2 Corrected Avg. =	40				
Period % Recovery =	95.7		100.0	95.7	

Date/Time Printed: 08/11/2009 15:02

Stack Rata Report

COVANTA ENERGY

Company: Covanta Huntington, Inc.
Report Name: UNIT #3 STACK RATA

Start of Report: 08/11/2009 14:28
End of Report: 08/11/2009 14:51 **Validation:** Valid Data Only

	NOxs	SO2S	COlow	COhigh	CO2	O2	Steam Flow
Group#-Channel#	G38-C10	G38-C9	G38-C3	G38-C4	G38-C8	G38-C7	G38-C19
Long Descrip.	U-3 NOx S	U-3 SO2 S	U-3 CO St	U-3 CO St	U-3 CO2 S	U-3 O2 St	U-3 Steam
Short Descrip.	NOxs	SO2s	COs LoRng	COs HiRng	CO2s	O2s	Steam
Units	ppm	ppm	ppm	ppm	%	%	K#/Hr
Range	0-500	0-200	0-200	0-2000	0-20	0-25	0-100
08/11/2009 14:28	56.3	0	15	15	7.4	12.66	80.0
08/11/2009 14:29	46.0	0	15	15	7.3	12.73	80.0
08/11/2009 14:30							
08/11/2009 14:31							
08/11/2009 14:32	56.8 <	0 <	13 <	13 <	7.6	12.29 <	81.0
08/11/2009 14:33	52.5	0	14	13	7.8	12.28	80.0
08/11/2009 14:34	55.5	0	14	14	7.7	12.28	80.0
08/11/2009 14:35	60.5	0	14	14	7.8	12.18	80.0
08/11/2009 14:36	65.8	0	14	13	7.9	11.98	80.0
08/11/2009 14:37	62.5	0	11	10	7.7	12.25	80.0
08/11/2009 14:38	54.3	0	12	12	7.8	12.18	80.0
08/11/2009 14:39	49.8	0	15	15	7.6	12.49	80.0
08/11/2009 14:40	54.8	0	12	12	7.7	12.25	80.0
08/11/2009 14:41	49.5	0	13	13	7.6	12.40	80.0
08/11/2009 14:42	57.8	0	15	14	7.9	12.11	80.0
08/11/2009 14:43	58.0	0	15	14	7.7	12.25	80.0
08/11/2009 14:44	50.3	0	15	14	7.8	12.26	79.0
08/11/2009 14:45	49.8	0	13	12	7.6	12.41	79.0
08/11/2009 14:46	57.8	0	14	13	8.1	11.81	80.0
08/11/2009 14:47	64.3	0	13	12	8.0	11.98	80.0
08/11/2009 14:48	60.3	0	11	11	7.7	12.21	80.0
08/11/2009 14:49	62.3	0	15	16	8.0	11.88	80.0
08/11/2009 14:50	75.3	0	17	15	8.4	11.53	80.0
08/11/2009 14:51	82.5	0	12	11	8.2	11.68	81.0
Raw Average =	58	0	13.7	13.2	7.7	12.1	80.0
O2 Corrected Avg. =	93	0	21	21			
Lbs./Hour Avg. =	22.19	0.00	3.18				
Period % Recovery =	95.7	95.7	95.7	95.7	100.0	95.7	100.0

Date/Time Printed: 08/11/2009 15:02

R#5

Economizer Rata Report

COVANTA ENERGY

Company: Covanta Huntington, Inc.
Report Name: UNIT #3 ECON RATA

Start of Report: 08/11/2009 15:02
End of Report: 08/11/2009 15:25
Validation: Valid Data Only

	SO2e	CO2e	O2e
Group#-Channel#	G38-C6	G38-C2	G38-C1
Long Descrip.	U-3 SO2 E	U-3 CO2 E	U-3 O2 Ec
Short Descrip.	SO2e	CO2e	O2e
Units	ppm	%	%
Range	0-500	0-20	0-25
08/11/2009 15:02	31	8.7	10.9
08/11/2009 15:03	36	8.9	10.6
08/11/2009 15:04	35	8.7	10.8
08/11/2009 15:05	32	8.6	11.0
08/11/2009 15:06	31	8.5	11.1
08/11/2009 15:07	30	9.0	10.6
08/11/2009 15:08	30	9.1	10.3
08/11/2009 15:09	30	8.4	11.1
08/11/2009 15:10	32	8.5	11.0
08/11/2009 15:11	30	8.1	11.5
08/11/2009 15:12	31	8.2	11.4
08/11/2009 15:13	32	8.1	11.5
08/11/2009 15:14	33	9.0	10.6
08/11/2009 15:15	37	9.2	10.2
08/11/2009 15:16	34	8.5	11.0
08/11/2009 15:17	33	8.5	11.0
08/11/2009 15:18	30	8.1	11.5
08/11/2009 15:19	30	8.4	11.2
08/11/2009 15:20	29	8.0	11.6
08/11/2009 15:21	29	8.4	11.2
08/11/2009 15:22	34	9.3	10.2
08/11/2009 15:23	34	9.3	10.2
08/11/2009 15:24	24	8.8	10.7
08/11/2009 15:25	24	8.8	10.7
Raw Average =	31	8.6	10.9
O2 Corrected Avg. =	43		
Period % Recovery =	100.0	100.0	100.0

Date/Time Printed: 08/11/2009 15:30

Stack Rata Report

H5

COVANTA ENERGY

Company: Covanta Huntington, Inc.
Report Name: UNIT #3 STACK RATA

Start of Report: 08/11/2009 15:02
End of Report: 08/11/2009 15:25

Validation: Valid Data Only

	NOxs	SO2S	COlow	COhigh	CO2	O2	Steam Flow
Group#-Channel#	G38-C10	G38-C9	G38-C3	G38-C4	G38-C8	G38-C7	G38-C19
Long Descrip.	U-3 NOx S	U-3 SO2 S	U-3 CO St	U-3 CO St	U-3 CO2 S	U-3 O2 St	U-3 Steam
Short Descrip.	NOxs	SO2s	COs LoRng	COs HiRng	CO2s	O2s	Steam
Units	ppm	ppm	ppm	ppm	%	%	K#/Hr
Range	0-500	0-200	0-200	0-2000	0-20	0-25	0-100
08/11/2009 15:02	64.0	0	9	9	7.9	12.05	81.0
08/11/2009 15:03	72.3	0	10	10	8.1	11.80	81.0
08/11/2009 15:04	74.3	0	10	10	7.9	12.05	82.0
08/11/2009 15:05	66.5	0	9	8	7.7	12.25	82.0
08/11/2009 15:06	64.0	0	9	9	7.7	12.24	82.0
08/11/2009 15:07	67.3	0	11	10	8.1	11.74	82.0
08/11/2009 15:08	81.8	0	8	6	8.3	11.60	83.0
08/11/2009 15:09	59.0	0	6	5	7.7	12.25	83.0
08/11/2009 15:10	57.8	0	8	7	7.8	12.21	83.0
08/11/2009 15:11	47.8	0	9	9	7.4	12.60	82.0
08/11/2009 15:12	48.3	0	11	10	7.4	12.53	81.0
08/11/2009 15:13	49.5	0	11	11	7.4	12.61	80.0
08/11/2009 15:14	59.3	0	17	17	8.1	11.66	81.0
08/11/2009 15:15	84.0	0	13	11	8.5	11.46	81.0
08/11/2009 15:16	59.5	0	8	8	7.7	12.20	81.0
08/11/2009 15:17	53.3	0	11	11	7.7	12.25	81.0
08/11/2009 15:18	48.8	0	10	10	7.3	12.69	81.0
08/11/2009 15:19	52.8	0	13	13	7.5	12.41	80.0
08/11/2009 15:20	46.5	0	13	12	7.3	12.80	80.0
08/11/2009 15:21	47.8	0	15	16	7.6	12.31	80.0
08/11/2009 15:22	76.0	0	16	15	8.4	11.39	80.0
08/11/2009 15:23	85.8	0	11	10	8.5	11.34	81.0
08/11/2009 15:24	66.0	0	11	10	8.2	11.80	81.0
08/11/2009 15:25	65.5	0	10	10	8.0	11.88	81.0
Raw Average =	62	0	10.7	10.2	7.8	12.0	81.2
O2 Corrected Avg. =	98	0	17	16			
Lbs./Hour Avg. =	23.87	0.00	2.51				
Period % Recovery =	100.0	100.0	100.0	100.0	100.0	100.0	100.0

Date/Time Printed: 08/11/2009 15:30

Economizer Rata Report

COVANTA ENERGY

Company: Covanta Huntington, Inc.
Report Name: UNIT #3 ECON RATA

Start of Report: 08/11/2009 15:47
End of Report: 08/11/2009 16:10

Validation: Valid Data Only

	SO2e	CO2e	O2e
Group#-Channel#	G38-C6	G38-C2	G38-C1
Long Descrip.	U-3 SO2 E	U-3 CO2 E	U-3 O2 Ec
Short Descrip.	SO2e	CO2e	O2e
Units	ppm	%	%
Range	0-500	0-20	0-25
08/11/2009 15:47	40	8.0	11.6
08/11/2009 15:48	42	8.6	10.8
08/11/2009 15:49	41	8.3	11.3
08/11/2009 15:50	40	7.9	11.7
08/11/2009 15:51	41	8.2	11.3
08/11/2009 15:52	42	8.3	11.1
08/11/2009 15:53	40	8.8	10.6
08/11/2009 15:54	37	8.6	10.8
08/11/2009 15:55	34	8.4	11.0
08/11/2009 15:56	34	8.6	10.8
08/11/2009 15:57	34	8.4	11.0
08/11/2009 15:58	32	7.9	11.7
08/11/2009 15:59	33	8.8	10.6
08/11/2009 16:00	37	8.8	10.5
08/11/2009 16:01	35	8.5	11.0
08/11/2009 16:02	34	8.7	10.7
08/11/2009 16:03	33	8.4	11.0
08/11/2009 16:04	30	8.1	11.4
08/11/2009 16:05	30	8.5	11.0
08/11/2009 16:06	30	8.8	10.6
08/11/2009 16:07	28	8.7	10.8
08/11/2009 16:08	28	8.7	10.7
08/11/2009 16:09	27	8.4	11.1
08/11/2009 16:10	27	8.4	11.1
Raw Average =	34	8.4	11.0
O2 Corrected Avg. =	48		
Period % Recovery =	100.0	100.0	100.0

Date/Time Printed: 08/11/2009 16:12

Stack Rata Report

Company: Covanta Huntington, Inc.
Report Name: UNIT #3 STACK RATA

Start of Report: 08/11/2009 15:47
End of Report: 08/11/2009 16:10 **Validation:** Valid Data Only

	NOxs	SO2S	COlow	COhigh	CO2	O2	Steam Flow
Group#-Channel#	G38-C10	G38-C9	G38-C3	G38-C4	G38-C8	G38-C7	G38-C19
Long Descrip.	U-3 NOx S	U-3 SO2 S	U-3 CO St	U-3 CO St	U-3 CO2 S	U-3 O2 St	U-3 Steam
Short Descrip.	NOxs	SO2s	COs LoRng	COs HiRng	CO2s	O2s	Steam
Units	ppm	ppm	ppm	ppm	%	%	K#/Hr
Range	0-500	0-200	0-200	0-2000	0-20	0-25	0-100
08/11/2009 15:47	53.8	0	12	11	7.2	12.69	81.0
08/11/2009 15:48	72.3	0	13	12	7.8	12.04	81.0
08/11/2009 15:49	66.8	0	11	11	7.5	12.44	81.0
08/11/2009 15:50	51.3	0	13	13	7.2	12.89	80.0
08/11/2009 15:51	59.5	0	15	15	7.4	12.46	80.0
08/11/2009 15:52	65.5	0	15	14	7.6	12.29	81.0
08/11/2009 15:53	72.3	0	16	16	8.0	11.80	81.0
08/11/2009 15:54	77.5	0	15	13	7.8	12.01	81.0
08/11/2009 15:55	74.5	0	12	12	7.7	12.24	81.0
08/11/2009 15:56	77.8	0	12	11	7.8	12.00	81.0
08/11/2009 15:57	76.8	0	11	10	7.7	12.25	81.0
08/11/2009 15:58	59.3	0	11	11	7.2	12.79	80.0
08/11/2009 15:59	67.0	0	14	14	7.9	11.79	81.0
08/11/2009 16:00	77.5	0	11	10	8.1	11.74	81.0
08/11/2009 16:01	70.8	0	9	9	7.7	12.13	81.0
08/11/2009 16:02	79.5	0	12	11	7.9	11.91	81.0
08/11/2009 16:03	75.3	0	10	10	7.7	12.23	81.0
08/11/2009 16:04	62.5	0	11	11	7.4	12.54	81.0
08/11/2009 16:05	66.5	0	13	13	7.6	12.20	81.0
08/11/2009 16:06	79.3	0	14	14	8.0	11.84	81.0
08/11/2009 16:07	68.3	0	14	13	7.9	12.06	81.0
08/11/2009 16:08	73.3	0	12	11	7.9	11.94	81.0
08/11/2009 16:09	66.5	0	11	10	7.6	12.31	81.0
08/11/2009 16:10	66.5	0	10	10	7.7	12.25	81.0
Raw Average =	69	0	12.3	11.8	7.6	12.2	80.8
O2 Corrected Avg. =	110	0	19	18			
Lbs./Hour Avg. =	26.89	0.00	2.92				
Period % Recovery =	100.0	100.0	100.0	100.0	100.0	100.0	100.0

Date/Time Printed: 08/11/2009 16:12

APPENDIX D

Reference Method Field Data (Moisture, Flow Rate)

ISOKINETIC SAMPLING TRAIN RESULTS - METHOD 4

Client Name	Covanta Projects, Inc.	Operator	RP, BH
Plant Name	Huntington Resource Recovery Facility	Project #	10639
Sampling Location	Unit #1 FF Outlet	Standard Temperature, °F	68

USE IN AVERAGE OF RUN SET? 1 or 0 =>		1	1			SET AVERAGE
Run Number		1-O-M4-1	1-O-M4-2			
Run Date		08/13/09	08/13/09			
Run Start Time	hh:mm	826	1244			
Run Stop Time	hh:mm	1231	1414			
Sampling Parameters						
Meter Calibration Factor	Y	0.9771	0.9771			
Y_{QA} Calculated by Test Run	Y_{QA}	0.9894	0.9926			
Y_{QA} PASS/FAIL by Test Run	Check	PASS	PASS			PASS
Pitot Tube Coefficient	C_p	0.84	0.84			
Stack/Duct Static Pressure	in H_2O	-16.20	-16.20			-16.20
Stack Cross-Sectional Area	ft^2	21.648	21.648			21.648
Barometric Pressure	in Hg	29.9	29.9			29.9
Carbon Dioxide Percentage	% CO_2	8.1	8.1			8.1
Oxygen Percentage	% O_2	11.8	11.5			11.7
Carbon Monoxide Percentage	% CO	0.0	0.0			0.0
Nitrogen Percentage	% N_2	80.1	80.4			80.3
Total Water Volume Collected	mL	375.8	158.4			267.1
Sample Volume	ft^3	95.112	35.667			65.389
Average Meter Temperature	°F	71	74			72
Average Stack Temperature	°F	271	272			271
Average Delta H	in H_2O	0.50	0.50			0.50
Total Sampling Time	min	240	90			165
Air Flow Parameters						
Volume of Water vapor @ STP	SCF	17.689	7.456			12.572
Volume Metered @ STP	DSCF	92.511	34.486			63.498
Absolute Stack/Duct Pressure	in Hg	28.7	28.7			28.7
Absolute Meter Pressure	in Hg	29.9	29.9			29.9
Calculated Stack Moisture	% H_20	16.1	17.8			16.9
Saturated Stack Moisture	% H_20	100.0	100.0			100.0
Reported Stack Moisture Content	% H_20	16.1	17.8			16.9
Dry Mole Fraction	decimal	0.839	0.822			0.831
Avg Differential Press. (Delta P)	in H_2O	1.094	1.108			1.101
Dry Gas Molecular Weight	lb/lb-mole	29.77	29.76			29.76
Wet Stack Gas Molecular Weight	lb/lb-mole	27.88	27.67			27.77
Average Stack Gas Velocity	ft/sec	71.80	72.54			72.17
Air Flow Rate Results						
Actual Stack Flow/Minute	ACFM	93,266	94,218			93,742
Dry Standard Stack Flow/Minute	DSCFM	54,232	53,651			53,942

* In accordance with EPA Method 23, Section 9.9, results below the minimum detection limit were treated as zero when averaging or totaling the results. 68oF and 29.92 inches Hg

ISOKINETIC SAMPLING TRAIN RESULTS - METHOD: **M316**

Client Name	Covanta Projects, Inc.	**Operator**	RP/JMA
Plant Name	Huntington Resource Recovery Facility	**Project #**	10639
Sampling Location	Unit #2 FF Outlet	**Standard Temperature, °F**	68

USE IN AVERAGE OF RUN SET? 1 or 0 =>		**1**	**1**	**1**		**SET AVERAGE**
Run Number		2-O-M316-1	2-O-M316-2	2-O-M316-3		
Run Date		08/12/09	08/12/09	08/12/09		
Run Start Time	hh:mm	813	1108	1549		
Run Stop Time	hh:mm	916	1212	1652		
Sampling Parameters						
Meter Calibration Factor	Y	0.9874	0.9874	0.9874		
Y_{QA} Calculated by Test Run	Y_{QA}	1.0105	0.9606	0.9951		
Y_{QA} PASS/FAIL by Test Run	Check	PASS	PASS	PASS		PASS
Pitot Tube Coefficient	C_p	0.84	0.84	0.84		
Stack/Duct Static Pressure	in H_2O	-14.50	-14.50	-14.50		-14.50
Stack Cross-Sectional Area	ft^2	21.648	21.648	21.648		21.648
Barometric Pressure	in Hg	29.8	29.8	29.8		29.8
Actual Nozzle Diameter	in	0.216	0.216	0.216		
Carbon Dioxide Percentage	% CO_2	7.0	7.0	7.0		7.0
Oxygen Percentage	% O_2	12.6	12.6	12.6		12.6
Carbon Monoxide Percentage	% CO	0.0	0.0	0.0		0.0
Nitrogen Percentage	% N_2	80.4	80.4	80.4		80.4
Total Water Volume Collected	mL	170.7	187.0	186.6		181.4
Sample Volume	ft^3	39.178	43.437	42.688		41.768
Average Meter Temperature	°F	78	83	78		79
Average Stack Temperature	°F	270	271	271		271
Average Delta H	in H_2O	1.30	1.42	1.48		1.40
Total Sampling Time	min	60	60	60		60
Air Flow Parameters						
Volume of Water vapor @ STP	SCF	8.035	8.802	8.783		8.540
Volume Metered @ STP	DSCF	37.948	41.689	41.342		40.326
Absolute Stack/Duct Pressure	in Hg	28.7	28.7	28.7		28.7
Absolute Meter Pressure	in Hg	29.9	29.9	29.9		29.9
Calculated Stack Moisture	% H_20	17.5	17.4	17.5		17.5
Dry Mole Fraction	decimal	0.825	0.826	0.825		0.825
Avg Differential Pressure (Delta P)	in H_2O	1.154	1.265	1.327		1.249
Dry Gas Molecular Weight	lb/lb-mole	29.62	29.62	29.62		29.62
Wet Stack Gas Molecular Weight	lb/lb-mole	27.59	27.60	27.59		27.59
Average Stack Gas Velocity	ft/sec	74.02	77.55	79.43		77.00
Percent of Isokinetic Rate	% ISO	97.7	102.5	99.3		99.8
Air Flow Rate Results						
Actual Stack Flow/Minute	ACFM	96,141	100,726	103,176		100,014
Dry Standard Stack Flow/Minute	DSCFM	55,099	57,709	59,038		57,282

Concentration and Emission Rate Data Summary						
Formaldehyde	ug	< 8.30	< 8.24	< 8.30		
Molecular Weight	MW	30.03	30.03	30.03		
Concentration ug/DSCM	ug/DSCM	< 7.72	< 6.98	< 7.09		< 7.26
Concentration @ 12% CO_2	ug@12%	< 13.2	< 12.0	< 12.2		< 12.5
Concentration @ 7% O_2	ug@7%	< 12.9	< 11.7	< 11.9		< 12.2
Emission Rate, lb/hr	lb/hr	< 1.59E-03	< 1.51E-03	< 1.57E-03		< 1.56E-03

ISOKINETIC SAMPLING TRAIN RESULTS - METHOD: **M8**

Client Name	Covanta Projects, Inc.	**Operator**	JMA/RP
Plant Name	Huntington Resource Recovery Facility	**Project #**	10639
Sampling Location	Unit #2 FF Outlet	**Standard Temperature, °F**	68

USE IN AVERAGE OF RUN SET? 1 or 0 =>		**1**	**1**	**1**		**SET AVERAGE**
Run Number		2-O-M8-1	2-O-M8-2	2-O-M8-3		
Run Date		08/12/09	08/12/09	08/12/09		
Run Start Time	hh:mm	941	1237	1417		
Run Stop Time	hh:mm	1044	1356	1521		
Sampling Parameters						
Meter Calibration Factor	Y	0.9874	0.9874	0.9874		
Y_{QA} Calculated by Test Run	Y_{QA}	0.9962	0.9866	0.9885		
Y_{QA} PASS/FAIL by Test Run	Check	PASS	PASS	PASS		PASS
Pitot Tube Coefficient	C_p	0.84	0.84	0.84		
Stack/Duct Static Pressure	in H_2O	-14.50	-14.50	-14.50		-14.50
Stack Cross-Sectional Area	ft^2	21.648	21.648	21.648		21.648
Barometric Pressure	in Hg	29.8	29.8	29.8		29.8
Actual Nozzle Diameter	in	0.213	0.217	0.213		
Carbon Dioxide Percentage	% CO_2	7.4	7.2	7.0		7.2
Oxygen Percentage	% O_2	12.3	12.4	12.7		12.5
Carbon Monoxide Percentage	% CO	0.0	0.0	0.0		0.0
Nitrogen Percentage	% N_2	80.3	80.4	80.3		80.3
Total Water Volume Collected	mL	162.8	171.1	172.8		168.9
Sample Volume	ft^3	39.990	39.783	40.987		40.253
Average Meter Temperature	°F	81	80	79		80
Average Stack Temperature	°F	271	271	271		271
Average Delta H	in H_2O	1.31	1.27	1.35		1.31
Total Sampling Time	min	60	60	60		60
Air Flow Parameters						
Volume of Water vapor @ STP	SCF	7.663	8.054	8.134		7.950
Volume Metered @ STP	DSCF	38.500	38.347	39.601		38.816
Absolute Stack/Duct Pressure	in Hg	28.7	28.7	28.7		28.7
Absolute Meter Pressure	in Hg	29.9	29.9	29.9		29.9
Calculated Stack Moisture	% H_20	16.6	17.4	17.0		17.0
Dry Mole Fraction	decimal	0.834	0.826	0.830		0.830
Avg Differential Pressure (Delta P)	in H_2O	1.230	1.108	1.275		1.205
Dry Gas Molecular Weight	lb/lb-mole	29.68	29.65	29.63		29.65
Wet Stack Gas Molecular Weight	lb/lb-mole	27.74	27.63	27.65		27.67
Average Stack Gas Velocity	ft/sec	76.28	72.54	77.79		75.54
Percent of Isokinetic Rate	% ISO	98.0	99.7	99.3		99.0
Air Flow Rate Results						
Actual Stack Flow/Minute	ACFM	99,081	94,222	101,036		98,113
Dry Standard Stack Flow/Minute	DSCFM	57,307	54,032	58,156		56,499

Concentration and Emission Rate Data Summary						
Sulfuric Acid Mist	mg	< 0.119	< 0.119	< 0.119		
Molecular Weight	MW	98.08	98.08	98.08		
Concentration, ppm	ppm	< 0.027	< 0.027	< 0.026		< 0.027
Concentration @ 12% CO_2	ppm@12%	< 0.043	< 0.045	< 0.045		< 0.044
Concentration @ 7% O_2	ppm@7%	< 0.043	< 0.044	< 0.044		< 0.044
Emission Rate, lb/hr	lb/hr	< 0.023	< 0.022	< 0.023		< 0.023

ISOKINETIC SAMPLING TRAIN RESULTS - METHOD 4

Client Name	Covanta Projects, Inc.	Operator	CAN
Plant Name	Huntington Resource Recovery Facility	Project #	10639
Sampling Location	Unit #3 FF Outlet	Standard Temperature, °F	68

USE IN AVERAGE OF RUN SET? 1 or 0 =>		1	1			SET AVERAGE
Run Number		3-O-M4-1	3-O-M4-2			
Run Date		08/11/09	08/11/09			
Run Start Time	hh:mm	855	1318			
Run Stop Time	hh:mm	1310	1717			
Sampling Parameters						
Meter Calibration Factor	Y	1.0027	1.0027			
Y_{QA} Calculated by Test Run	Y_{QA}	0.9668	0.9711			
Y_{QA} PASS/FAIL by Test Run	Check	PASS	PASS			PASS
Pitot Tube Coefficient	C_p	0.84	0.84			
Stack/Duct Static Pressure	in H_2O	-14.90	-14.90			-14.90
Stack Cross-Sectional Area	ft^2	21.648	21.648			21.648
Barometric Pressure	in Hg	29.7	29.7			29.7
Carbon Dioxide Percentage	% CO_2	7.7	8.0			7.9
Oxygen Percentage	% O_2	12.0	11.7			11.9
Carbon Monoxide Percentage	% CO	0.0	0.0			0.0
Nitrogen Percentage	% N_2	80.3	80.3			80.3
Total Water Volume Collected	mL	397.2	240.0			318.6
Sample Volume	ft^3	102.961	64.295			83.628
Average Meter Temperature	°F	85	90			87
Average Stack Temperature	°F	276	276			276
Average Delta H	in H_2O	0.50	0.50			0.50
Total Sampling Time	min	240	150			195
Air Flow Parameters						
Volume of Water vapor @ STP	SCF	18.696	11.297			14.997
Volume Metered @ STP	DSCF	99.336	61.520			80.428
Absolute Stack/Duct Pressure	in Hg	28.6	28.6			28.6
Absolute Meter Pressure	in Hg	29.7	29.7			29.7
Calculated Stack Moisture	% H_20	15.8	15.5			15.7
Saturated Stack Moisture	% H_20	100.0	100.0			100.0
Reported Stack Moisture Content	% H_20	15.8	15.5			15.7
Dry Mole Fraction	decimal	0.842	0.845			0.843
Avg Differential Press. (Delta P)	in H_2O	1.195	1.065			1.130
Dry Gas Molecular Weight	lb/lb-mole	29.71	29.75			29.73
Wet Stack Gas Molecular Weight	lb/lb-mole	27.86	27.93			27.89
Average Stack Gas Velocity	ft/sec	75.46	71.14			73.30
Air Flow Rate Results						
Actual Stack Flow/Minute	ACFM	98,013	92,407			95,210
Dry Standard Stack Flow/Minute	DSCFM	56,561	53,539			55,050

* In accordance with EPA Method 23, Section 9.9, results below the minimum detection limit were treated as zero when averaging or totaling the results. 68oF and 29.92 inches Hg

ISOKINETIC SAMPLING TRAIN DATASHEET - METHOD 4

Client Name	Covanta Projects, Inc.	**Run #**	1-O-M4-1		
Plant Name	Huntington Resource Recovery Facility	**Project #**	10639	Run Start	826
Plant City, State	East Northport, NY	**Personnel**	RP, BH	Run End	1231
Test Location	Unit #1 FF Outlet	**Tester Signature**			
Date of Test	08/13/09	**Checked By**			

Isokinetic Factor Setup		Pressures		Sampling Equipment			Filter ID & Tares		Actuals
ΔH @ 0.75 SCFM	1.791	Pbar	29.9	Meter Console #		T5	NA		CO_2
Meter Calibration Factor	0.9771	Pstatic	-16.20	Ideal Nozzle Diameter		0.242			8.1
Pitot Tube Coefficient	0.84	Tstd, °F	68	Nozzle #		NA	XAD ID & Tares		O_2
Estimated DGM Temp	85	Pstd	29.92	Actual Nozzle Diameter		NA			11.8
Estimated Stack Temp or M2 Avg.	290	Diluent		Probe Lgth/ID #	6'	145			CO
Estimated Delta P or M2 Avg.	1.00	Estimates		Liner Material		BG	Y_{qa}		0.0
Estimated Moisture Content	17.0	CO_2	8.0	Filter Box #		HB12	0.9894		N_2
Estimated Dry Molecular Weight	29.76	O_2	12.0	Cold Box ID #		CB16	-1.26%		80.1
Estimated Velocity, ft/sec	69.7	CO	0.0	Umbilical ID #		U50-9	PASS		H_20
K Factor (delta H/delta P)	######	N_2	80.0	TC ID #s		145			375.8

Equipment Checks		PRE	POST	Leak Checks	1	2	3	4	5	6	Status
Tambient		62	68	DGM initial							0.000
Thermocouples		Y	Y	Vacuum	15	5					15
Pitots		Y	Y	Leak Rate	0.000	0.000					OK
Tedlar Bag	NA	Y	Y	DGM final							0.000

Point #	Clock Time	Test Time	Dry Gas Meter Reading	Velocity Head	Desired Orifice ΔH	Actual Orifice ΔH	Pump Vac.	DGM Inlet Temp	DGM Outlet Temp	Stack Temp	Filter Temp	Imp. Exit Temp	Cond. Exit Temp
	24 hr	min	ft^3	in H_2O	in H_2O	in H_2O	in Hg	°F	°F	°F	249.00	°F	°F
B - 12	826	0.0	90.309	1.42	######	0.50	2	62	62	268	249	63	NA
B - 11		10.0	94.272	1.47	######	0.50	2	63	62	270	250	60	NA
B - 10		20.0	98.235	1.27	######	0.50	2	65	63	271	250	59	NA
B - 9		30.0	102.198	1.15	######	0.50	2	67	65	272	252	58	NA
B - 8		40.0	106.161	1.15	######	0.50	2	69	67	272	253	56	NA
B - 7		50.0	110.124	1.00	######	0.50	2	70	69	272	253	55	NA
B - 6		60.0	114.087	1.00	######	0.50	2	70	69	271	254	55	NA
B - 5		70.0	118.050	1.02	######	0.50	2	71	69	273	253	55	NA
B - 4		80.0	122.013	0.90	######	0.50	2	72	70	273	254	55	NA
B - 3		90.0	125.976	0.90	######	0.50	2	72	70	273	254	55	NA
B - 2		100.0	129.939	0.95	######	0.50	2	72	71	273	254	56	NA
B - 1		110.0	133.902	1.00	######	0.50	2	72	71	272	254	56	NA
A - 12		120.0	137.865	1.30	######	0.50	2	73	71	272	253	57	NA
A - 11		130.0	141.828	1.23	######	0.50	2	73	72	271	255	58	NA
A - 10		140.0	145.791	1.25	######	0.50	2	73	72	271	255	59	NA
A - 9		150.0	149.754	1.25	######	0.50	2	73	72	271	255	57	NA
A - 8		160.0	153.717	1.20	######	0.50	2	73	72	271	254	56	NA
A - 7		170.0	157.680	1.15	######	0.50	2	74	72	271	253	54	NA
A - 6		180.0	161.643	1.15	######	0.50	2	74	72	271	254	54	NA
A - 5		190.0	165.606	0.95	######	0.50	2	74	73	271	253	54	NA
A - 4		200.0	169.569	0.95	######	0.50	2	74	73	271	254	54	NA
A - 3		210.0	173.532	0.93	######	0.50	2	74	73	272	254	54	NA
A - 2		220.0	177.495	0.92	######	0.50	2	74	73	271	254	55	NA
A - 1		230.0	181.458	0.90	######	0.50	2	74	73	271	254	56	NA
-	1231	240.0	185.421										

Continued on Page 2

Client Name	Covanta Projects, Inc.	Run #	1-O-M4-1	
Plant Name	Huntington Resource Recovery Facility	Project #	10639	Page 2 of 2

Point #	Clock Time	Test Time	Dry Gas Meter Reading	Velocity Head	Desired Orifice ΔH	Actual Orifice ΔH	Pump Vac.	DGM Inlet Temp	DGM Outlet Temp	Stack Temp	Filter Temp	Imp. Exit Temp	Cond. Exit Temp
	24 hr	min	ft^3	in H_2O	in H_2O	in H_2O	in Hg	°F	°F	°F	°F	°F	°F
						MAX =>	2						
Average Values		240.0	95.112	1.094		0.50		71		271			

ISOKINETIC SAMPLING TRAIN DATASHEET - METHOD 4

Client Name	Covanta Projects, Inc.	**Run #**	1-O-M4-2		
Plant Name	Huntington Resource Recovery Facility	**Project #**	10639	Run Start	1244
Plant City, State	East Northport, NY	**Personnel**	RP, BH	Run End	1414
Test Location	Unit #1 FF Outlet	**Tester Signature**			
Date of Test	08/13/09	**Checked By**			

Isokinetic Factor Setup		Pressures		Sampling Equipment			Filter ID & Tares		Actuals
ΔH @ 0.75 SCFM	1.791	**Pbar**	29.9	**Meter Console #**		T5	NA		CO_2
Meter Calibration Factor	0.9771	**Pstatic**	-16.20	**Ideal Nozzle Diameter**		0.242			**8.1**
Pitot Tube Coefficient	0.84	**Tstd, °F**	68	**Nozzle #**		NA	**XAD ID & Tares**		O_2
Estimated DGM Temp	85	**Pstd**	29.92	**Actual Nozzle Diameter**		NA			**11.5**
Estimated Stack Temp or M2 Avg.	290	**Diluent**		**Probe Lgth/ID #**	6'	145			**CO**
Estimated Delta P or M2 Avg.	1.000	**Estimates**		**Liner Material**		BG	Y_{qa}		**0.0**
Estimated Moisture Content	17.0	CO_2	8.0	**Filter Box #**		HB12	0.9926		N_2
Estimated Dry Molecular Weight	29.76	O_2	12.0	**Cold Box ID #**		CB16	-1.58%		**80.4**
Estimated Velocity, ft/sec	69.7	**CO**	0.0	**Umbilical ID #**		U50-9	**PASS**		H_20
K Factor (delta H/delta P)	######	N_2	**80.0**	**TC ID #s**		145			**158.4**

Equipment Checks		PRE	POST	Leak Checks	1	2	3	4	5	6	Status
Tambient		75	80	**DGM initial**							0.000
Thermocouples		Y	Y	**Vacuum**	15	6					15
Pitots		Y	Y	**Leak Rate**	0.000	0.000					**OK**
Tedlar Bag	NA	Y	Y	**DGM final**							0.000

Point #	Clock Time	Test Time	Dry Gas Meter Reading	Velocity Head	Desired Orifice ΔH	Actual Orifice ΔH	Pump Vac.	DGM Inlet Temp	DGM Outlet Temp	Stack Temp	Filter Temp	Imp. Exit Temp	Cond. Exit Temp
	24 hr	min	ft^3	in H_2O	in H_2O	in H_2O	in Hg	°F	°F	°F	°F	°F	°F
A - 12		0.0	185.720	1.20	######	0.50	2	70	70	271	245	65	NA
A - 11		10.0	189.683	1.25	######	0.50	2	72	70	271	248	60	NA
A - 10		20.0	193.646	1.28	######	0.50	2	75	73	271	253	58	NA
A - 9		30.0	197.609	1.26	######	0.50	2	75	73	271	255	53	NA
A - 8		40.0	201.572	1.22	######	0.50	2	75	74	271	256	52	NA
A - 7		50.0	205.535	1.18	######	0.50	2	75	74	271	256	52	NA
A - 6		60.0	209.498	1.10	######	0.50	2	76	74	272	256	52	NA
A - 5		70.0	213.461	0.99	######	0.50	2	76	74	271	255	53	NA
A - 4		80.0	217.424	0.95	######	0.50	2	76	74	271	255	54	NA
A - 3		90.0	221.387	0.95	######					272			NA
A - 2				0.92	######					271			NA
A - 1				0.89	######					271			NA
B - 12				1.39	######					273			NA
B - 11				1.45	######					272			NA
B - 10				1.30	######					273			NA
B - 9				1.20	######					272			NA
B - 8				1.20	######					272			NA
B - 7				0.99	######					271			NA
B - 6				1.00	######					272			NA
B - 5				1.10	######					271			NA
B - 4				1.00	######					271			NA
B - 3				1.00	######					271			NA
B - 2				0.90	######					273			NA
B - 1				1.00	######					272			NA
-													

Continued on Page 2

Client Name	Covanta Projects, Inc.	Run #	1-O-M4-2	
Plant Name	Huntington Resource Recovery Facility	Project #	10639	Page 2 of 2

Point #	Clock Time	Test Time	Dry Gas Meter Reading	Velocity Head	Desired Orifice ΔH	Actual Orifice ΔH	Pump Vac.	DGM Inlet Temp	DGM Outlet Temp	Stack Temp	Filter Temp	Imp. Exit Temp	Cond. Exit Temp
	24 hr	min	ft^3	in H_2O	in H_2O	in H_2O	in Hg	°F	°F	°F	°F	°F	°F
						MAX =>	2						
Average Values		90.0	35.667	1.108		0.50		74		272			

EPA Method 4 for Percent Moisture Determination

Client Name	Covanta Projects, Inc.	**Project #**	10639
Plant Name	Huntington Resource Rec Fac	**Balance Type**	Electronic
Plant City, State	East Northport, NY	**Balance ID**	EB1
Sampling Location	Unit 1 FF Outlet	**Operator Name**	RBC

Run Number	1-O-M4-1	1-O-M4-2		
Test Date	08/13/09	08/13/09		
Reagent Box ID				

Impinger Reagent	DI	mL	mL	mL	mL
Final Catch Weight	grams	554.2	352.5		
Initial Tare Weight	grams	200.0	200.0		
Net Moisture Caught	grams	354.2	152.5	0.0	0.0

Impinger Reagent		mL	mL	mL	mL
Final Catch Weight	grams				
Initial Tare Weight	grams				
Net Moisture Caught	grams	0.0	0.0	0.0	0.0

Impinger Reagent		mL	mL	mL	mL
Final Catch Weight	grams				
KMNo4 Weight	grams				
KMnO4 g/mL	1.1				
Initial Jar Tare Weight	grams				
Net Moisture Caught	grams	0.0	0.0	0.0	0.0

Silica Gel	SG	grams	grams	grams	grams
Final Catch Weight	grams	256.6	267.3		
Initial Tare Weight	grams	235.0	261.4		
Net Moisture Caught	grams	21.6	5.9	0.0	0.0

Total Catch	grams	375.8	158.4	0.0	0.0

Signature:		**Checked By:**	

EPA Method 3 for Molecular Weight Determination

Client Name	Covanta Projects, Inc.	**Project #**	10639
Plant Name	Huntington Resource Recovery Facility	**Fuel Type**	MSW
Plant City, State	East Northport, NY	**Fo Min**	
Test Location	Unit 2 FF Outlet	**Fo Max**	

Date	08/12/09	**Run Number**	2-O-M316-1		**ORSAT ID**	2	**Leak Ck?**
Shared With			**Start Time**	813	**Stop Time**	916	Y
Sample Analysis Time	**Carbon Dioxide Concentra.**	**Oxygen Concentra.**	**Oxygen Concentra. by difference**	**CO & Nitrogen Concentra.**	**Carbon Dioxide Difference**	**Oxygen Difference**	**Operator** CMW **Bag #**
	($\%CO_2$)	reading	($\%O_2$)	($\%CO+N_2$)	(M_d)	(ΔM_d)	OB3
hh:mm	reading	reading	reading	percent	lb/lb-mole	lb/lb-mole	**Fyrite #s**
1000	7.0	19.6	12.6	80.4	0.0	0.0	
TO	7.0	19.6	12.6	80.4	0.0	0.0	**Fo**
1015	7.0	19.6	12.6	80.4	0.0	0.0	
Averages	7.0		12.6	80.4	OK	OK	

Date	08/12/09	**Run Number**	2-O-M316-2		**ORSAT ID**	2	**Leak Ck?**
Shared With			**Start Time**	1108	**Stop Time**	1212	Y
Sample Analysis Time	**Carbon Dioxide Concentra.**	**Oxygen Concentra.**	**Oxygen Concentra. by difference**	**CO & Nitrogen Concentra.**	**Carbon Dioxide Difference**	**Oxygen Difference**	**Operator** JMA **Bag #**
	($\%CO_2$)	reading	($\%O_2$)	($\%CO+N_2$)	(M_d)	(ΔM_d)	OB-9
hh:mm	reading	reading	reading	percent	lb/lb-mole	lb/lb-mole	**Fyrite #s**
1231	7.0	19.7	12.7	80.3	0.1	0.1	
to	7.1	19.7	12.6	80.3	0.1	0.0	**Fo**
1250	7.0	19.6	12.6	80.4	0.0	0.1	
Averages	7.0		12.6	80.4	OK	OK	

Date	08/12/09	**Run Number**	2-O-M316-3		**ORSAT ID**	2	**Leak Ck?**
Shared With			**Start Time**	1549	**Stop Time**	1652	Y
Sample Analysis Time	**Carbon Dioxide Concentra.**	**Oxygen Concentra.**	**Oxygen Concentra. by difference**	**CO & Nitrogen Concentra.**	**Carbon Dioxide Difference**	**Oxygen Difference**	**Operator** CMW **Bag #**
	($\%CO_2$)	reading	($\%O_2$)	($\%CO+N_2$)	(M_d)	(ΔM_d)	OB8
hh:mm	reading	reading	reading	percent	lb/lb-mole	lb/lb-mole	**Fyrite #s**
1702	7.0	19.6	12.6	80.4	0.0	0.0	
TO	7.0	19.6	12.6	80.4	0.0	0.0	**Fo**
1718	7.0	19.6	12.6	80.4	0.0	0.0	
Averages	7.0		12.6	80.4	OK	OK	

Date	08/12/09	**Run Number**			**ORSAT ID**	2	**Leak Ck?**
Shared With			**Start Time**		**Stop Time**		Y
Sample Analysis Time	**Carbon Dioxide Concentra.**	**Oxygen Concentra.**	**Oxygen Concentra. by difference**	**CO & Nitrogen Concentra.**	**Carbon Dioxide Difference**	**Oxygen Difference**	**Operator** CMW **Bag #**
	($\%CO_2$)	reading	($\%O_2$)	($\%CO+N_2$)	(M_d)	(ΔM_d)	
hh:mm	reading	reading	reading	percent	lb/lb-mole	lb/lb-mole	**Fyrite #s**
			0.0	100.0			
			0.0	100.0			**Fo**
			0.0	100.0			
Averages	#DIV/0!		0.0	#DIV/0!			

Signature:	Chyh M. Cu	Checked by:	

EPA Method 4 for Percent Moisture Determination

Client Name	Covanta Projects, Inc.	**Project #**	10639
Plant Name	Huntington Resource Rec Fac	**Balance Type**	Electronic
Plant City, State	East Northport, NY	**Balance ID**	EB1
Sampling Location	Unit 2 FF Outlet	**Operator Name**	Blake Cone

Run Number	2-O-M316-1	2-O-M316-2	2-O-M316-3	
Test Date	08/12/09	08/12/09	08/12/09	
Reagent Box ID				

Impinger Reagent	DI	mL	mL	mL	mL
Final Catch Weight	grams	423.7	438.8	439.6	
Initial Tare Weight	grams	260.5	260.2	261.0	
Net Moisture Caught	grams	163.2	178.6	178.6	0.0

Impinger Reagent		mL	mL	mL	mL
Final Catch Weight	grams				
Initial Tare Weight	grams				
Net Moisture Caught	grams	0.0	0.0	0.0	0.0

Impinger Reagent		mL	mL	mL	mL
Final Catch Weight	grams				
KMNo4 Weight	grams				
KMnO4 g/mL	1.1				
Initial Jar Tare Weight	grams				
Net Moisture Caught	grams	0.0	0.0	0.0	0.0

Silica Gel	SG	grams	grams	grams	grams
Final Catch Weight	grams	265.5	232.4	240.4	
Initial Tare Weight	grams	258.0	224.0	232.4	
Net Moisture Caught	grams	7.5	8.4	8.0	0.0

Total Catch	grams	170.7	187.0	186.6	0.0

Signature:		**Checked By:**	

ISOKINETIC SAMPLING TRAIN DATASHEET - METHOD M316

Client Name	Covanta Projects, Inc.	Run #	2-O-M316-1		
Plant Name	Huntington Resource Recovery Facility	Project #	10639	Run Start	813
Plant City, State	East Northport, NY	Personnel	RP/JMA	Run End	916
Test Location	Unit #2 FF Outlet	Tester Signature			
Date of Test	08/12/09	Checked By			

Isokinetic Factor Setup		Pressures		Sampling Equipment			Filter ID & Tares	Actuals
ΔH @ 0.75 SCFM	1.650	Pbar	29.8	Meter Console #		T2		CO_2
Meter Calibration Factor	0.9874	Pstatic	-14.50	Ideal Nozzle Diameter		0.242		7.0
Pitot Tube Coefficient	0.84	Tstd, °F	68	Nozzle #		GN885		O_2
Estimated DGM Temp	85	Pstd	29.92	Actual Nozzle Diameter		0.216	XAD ID & Tares	12.6
Estimated Stack Temp or M2 Avg.	290	Diluent		Probe Lgth/ID #	6'	160		CO
Estimated Delta P or M2 Avg.	1.00	Estimates		Liner Material		BG	Y_{qa}	0.0
Estimated Moisture Content	17.0	CO_2	8.0	Filter Box #		HB6	1.0105	N_2
Estimated Dry Molecular Weight	29.76	O_2	12.0	Cold Box ID #		CB17	-2.34%	80.4
Estimated Velocity, ft/sec	69.6	CO	0.0	Umbilical ID #		U50-9	PASS	H_20
K Factor (delta H/delta P)	1.11	N_2	80.0	TC ID #s		160		170.7

Equipment Checks		PRE	POST	Leak Checks	1	2	3	4	5	6	Status
Tambient		70	72	DGM initial							0.000
Thermocouples		Y	Y	Vacuum	15	8					15
Pitots		Y	Y	Leak Rate	0.002	0.002					OK
Tedlar Bag	OB-3	Y	Y	DGM final							0.000

Point #	Clock Time	Test Time	Dry Gas Meter Reading	Velocity Head	Desired Orifice ΔH	Actual Orifice ΔH	Pump Vac.	DGM Inlet Temp	DGM Outlet Temp	Stack Temp	Filter Temp	Imp. Exit Temp	Cond. Exit Temp
	24 hr	min	ft^3	in H_2O	in H_2O	in H_2O	in Hg	°F	°F	°F	°F	°F	°F
B - 12	813	0.0	837.928	1.30	1.44	1.44	5	74	74	269	256	62	NA
B - 11		2.5	839.840	1.30	1.44	1.44	5	74	74	269	256	58	NA
B - 10		5.0	841.310	1.30	1.44	1.44	5	76	74	270	257	55	NA
B - 9		7.5	843.230	1.40	1.55	1.55	5	76	74	270	254	55	NA
B - 8		10.0	844.728	1.40	1.55	1.55	5	77	75	271	255	55	NA
B - 7		12.5	846.739	1.50	1.67	1.67	5	78	75	270	256	55	NA
B - 6		15.0	848.342	1.10	1.22	1.22	6	79	74	270	257	55	NA
B - 5		17.5	850.235	0.93	1.03	1.03	5	79	75	271	253	57	NA
B - 4		20.0	851.537	0.85	0.94	0.94	4	79	75	271	259	58	NA
B - 3		22.5	852.980	0.95	1.05	1.05	4	79	75	270	255	58	NA
B - 2		25.0	854.482	0.72	0.80	0.80	4	80	75	270	255	58	NA
B - 1		27.5	856.234	0.68	0.76	0.76	4	80	76	270	255	59	NA
A - 12	843	30.0	857.164	1.70	1.89	1.89	7	79	76	269	256	60	NA
A - 11	846	32.5	859.071	1.60	1.78	1.78	7	80	76	270	257	58	NA
A - 10		35.0	860.075	1.40	1.55	1.55	7	81	77	270	257	57	NA
A - 9		37.5	862.730	1.30	1.44	1.44	5	82	77	270	257	58	NA
A - 8		40.0	864.430	1.30	1.44	1.44	5	81	77	271	256	59	NA
A - 7		42.5	866.120	1.30	1.44	1.44	5	81	77	271	257	59	NA
A - 6		45.0	867.792	1.20	1.33	1.33	5	81	77	272	256	59	NA
A - 5		47.5	869.465	1.10	1.22	1.22	5	81	77	271	257	60	NA
A - 4		50.0	871.070	1.00	1.11	1.11	5	82	77	270	257	60	NA
A - 3		52.5	872.642	0.92	1.02	1.02	5	82	77	270	257	57	NA
A - 2		55.0	874.162	0.85	0.94	0.94	4	82	77	269	257	56	NA
A - 1		57.5	875.622	0.97	1.08	1.08	4	82	78	270	256	56	NA
-	916	60.0	877.106										
-													
-													
-													
-													
-													
						MAX =>	7						
Average Values		60.0	39.178	1.154	1.30	1.30		78		270			

ISOKINETIC SAMPLING TRAIN DATASHEET - METHOD M316

Client Name	Covanta Projects, Inc.	Run #	2-O-M316-2		
Plant Name	Huntington Resource Recovery Facility	Project #	10639	Run Start	1108
Plant City, State	East Northport, NY	Personnel	RP/JMA	Run End	1212
Test Location	Unit #2 FF Outlet	Tester Signature			
Date of Test	08/12/09	Checked By			

Isokinetic Factor Setup		Pressures		Sampling Equipment			Filter ID & Tares		Actuals
ΔH @ 0.75 SCFM	1.650	Pbar	29.8	Meter Console #		T2			CO_2
Meter Calibration Factor	0.9874	Pstatic	-14.50	Ideal Nozzle Diameter		0.242			7.0
Pitot Tube Coefficient	0.84	Tstd, °F	68	Nozzle #		GN613			O_2
Estimated DGM Temp	85	Pstd	29.92	Actual Nozzle Diameter		0.216	XAD ID & Tares		12.6
Estimated Stack Temp or M2 Avg.	290	Diluent		Probe Lgth/ID #	6'	156			CO
Estimated Delta P or M2 Avg.	1.000	Estimates		Liner Material		BG	Y_{qa}		0.0
Estimated Moisture Content	17.0	CO_2	8.0	Filter Box #		HB6	0.9606		N_2
Estimated Dry Molecular Weight	29.76	O_2	12.0	Cold Box ID #		CB14	2.71%		80.4
Estimated Velocity, ft/sec	69.6	CO	0.0	Umbilical ID #		U50-9	PASS		H_20
K Factor (delta H/delta P)	1.11	N_2	80.0	TC ID #s		156			187.0

Equipment Checks		PRE	POST	Leak Checks	1	2	3	4	5	6	Status
Tambient		75	75	DGM initial							0.000
Thermocouples		Y	Y	Vacuum	15	7					15
Pitots		Y	Y	Leak Rate	0.001	0.001					OK
Tedlar Bag	OB-9	Y	Y	DGM final							0.000

Point #	Clock Time	Test Time	Dry Gas Meter Reading	Velocity Head	Desired Orifice ΔH	Actual Orifice ΔH	Pump Vac.	DGM Inlet Temp	DGM Outlet Temp	Stack Temp	Filter Temp	Imp. Exit Temp	Cond. Exit Temp
	24 hr	min	ft^3	in H_2O	in H_2O	in H_2O	in Hg	°F	°F	°F	°F	°F	°F
B - 12	1108	0.0	917.861	1.40	1.55	1.55	4	80	80	270	258	63	NA
B - 11		2.5	919.730	1.40	1.55	1.55	4	80	80	271	257	58	NA
B - 10		5.0	921.575	1.30	1.44	1.44	4	81	80	271	259	55	NA
B - 9		7.5	923.399	1.30	1.44	1.44	4	82	80	271	256	55	NA
B - 8		10.0	925.203	1.40	1.55	1.55	4	82	79	272	256	55	NA
B - 7		12.5	927.080	1.50	1.67	1.67	4	84	79	271	257	55	NA
B - 6		15.0	929.000	1.40	1.55	1.55	4	85	79	272	258	55	NA
B - 5		17.5	930.892	1.40	1.55	1.55	4	86	80	271	258	55	NA
B - 4		20.0	932.803	1.20	1.33	1.33	4	86	81	271	257	55	NA
B - 3		22.5	934.580	0.92	1.02	1.02	3	86	81	271	258	58	NA
B - 2		25.0	936.257	0.91	1.01	1.01	3	86	81	270	258	58	NA
B - 1		27.5	937.786	0.90	1.00	1.00	3	86	81	270	256	61	NA
A - 12	1138	30.0	939.325	1.70	1.89	1.89	5	84	82	270	257	63	NA
A - 11	1142	32.5	941.270	1.70	1.89	1.89	5	85	82	270	257	60	NA
A - 10		35.0	943.262	1.50	1.67	1.67	5	85	82	270	259	59	NA
A - 9		37.5	945.272	1.40	1.55	1.55	5	85	82	270	259	59	NA
A - 8		40.0	947.118	1.40	1.55	1.55	5	86	82	270	258	61	NA
A - 7		42.5	949.034	1.40	1.55	1.67	5	86	82	271	256	62	NA
A - 6		45.0	950.955	1.30	1.44	1.44	5	85	82	271	256	62	NA
A - 5		47.5	952.791	1.10	1.22	1.22	5	86	82	272	258	62	NA
A - 4		50.0	954.508	1.10	1.22	1.22	4	86	82	273	254	64	NA
A - 3		52.5	956.232	1.00	1.11	1.11	4	85	81	271	256	63	NA
A - 2		55.0	958.001	1.00	1.11	1.11	4	85	81	269	257	56	NA
A - 1		57.5	959.538	1.00	1.11	1.11	4	85	82	270	255	56	NA
-	1212	60.0	961.298										
-													
-													
-													
-													
-													
						MAX =>	5						
Average Values		60.0	43.437	1.265	1.42	1.42		83		271			

ISOKINETIC SAMPLING TRAIN DATASHEET - METHOD M316

Client Name	Covanta Projects, Inc.	Run #	2-O-M316-3		
Plant Name	Huntington Resource Recovery Facility	Project #	10639	Run Start	1549
Plant City, State	East Northport, NY	Personnel	RP/JMA	Run End	1652
Test Location	Unit #2 FF Outlet	Tester Signature			
Date of Test	08/12/09	Checked By			

Isokinetic Factor Setup		Pressures		Sampling Equipment			Filter ID & Tares		Actuals
ΔH @ 0.75 SCFM	1.650	Pbar	29.8	Meter Console #		T2			CO_2
Meter Calibration Factor	0.9874	Pstatic	-14.50	Ideal Nozzle Diameter		0.242			7.0
Pitot Tube Coefficient	0.84	Tstd, °F	68	Nozzle #		GN613			O_2
Estimated DGM Temp	85	Pstd	29.92	Actual Nozzle Diameter		0.216	XAD ID & Tares		12.6
Estimated Stack Temp or M2 Avg.	290	Diluent		Probe Lgth/ID #	6'	156			CO
Estimated Delta P or M2 Avg.	1.000	Estimates		Liner Material		BG	Y_{qa}		0.0
Estimated Moisture Content	17.0	CO_2	8.0	Filter Box #		HB6	0.9951		N_2
Estimated Dry Molecular Weight	29.76	O_2	12.0	Cold Box ID #		CB3	-0.78%		80.4
Estimated Velocity, ft/sec	69.6	CO	0.0	Umbilical ID #		U50-9	PASS		H_20
K Factor (delta H/delta P)	1.11	N_2	80.0	TC ID #s		156			186.6

Equipment Checks		PRE	POST	Leak Checks	1	2	3	4	5	6	Status
Tambient		73	73	DGM initial							0.000
Thermocouples		Y	Y	Vacuum	15	7					15
Pitots		Y	Y	Leak Rate	0.001	0.001					OK
Tedlar Bag	OB8	Y	Y	DGM final							0.000

Point #	Clock Time	Test Time	Dry Gas Meter Reading	Velocity Head	Desired Orifice ΔH	Actual Orifice ΔH	Pump Vac.	DGM Inlet Temp	DGM Outlet Temp	Stack Temp	Filter Temp	Imp. Exit Temp	Cond. Exit Temp
	24 hr	min	ft^3	in H_2O	in H_2O	in H_2O	in Hg	°F	°F	°F	°F	°F	°F
B - 12	1549	0.0	44.667	1.80	2.00	2.00	4	77	77	270	255	63	NA
B - 11		2.5	46.645	1.80	2.00	2.00	5	77	77	270	255	57	NA
B - 10		5.0	48.673	1.80	2.00	2.00	5	78	77	270	256	54	NA
B - 9		7.5	50.729	1.60	1.78	1.78	5	80	77	270	257	55	NA
B - 8		10.0	52.680	1.50	1.67	1.67	5	80	77	270	257	55	NA
B - 7		12.5	54.690	1.40	1.55	1.55	5	80	77	271	256	57	NA
B - 6		15.0	56.500	1.40	1.55	1.55	4	80	77	272	256	57	NA
B - 5		17.5	58.352	1.10	1.22	1.22	4	80	77	271	256	58	NA
B - 4		20.0	60.188	1.20	1.33	1.33	4	80	77	271	256	58	NA
B - 3		22.5	61.819	1.10	1.22	1.22	4	80	77	271	256	58	NA
B - 2		25.0	63.593	1.10	1.22	1.22	4	80	77	272	256	59	NA
B - 1		27.5	65.117	1.10	1.22	1.22	4	80	77	272	257	59	NA
A - 12	1619	30.0	66.732	1.20	1.33	1.33	4	78	77	270	256	61	NA
A - 11	1621	32.5	68.420	1.40	1.55	1.55	4	78	76	270	256	60	NA
A - 10		35.0	70.125	1.30	1.44	1.44	4	79	77	270	256	60	NA
A - 9		37.5	71.870	1.60	1.78	1.78	4	79	77	270	257	60	NA
A - 8		40.0	73.750	1.50	1.67	1.67	4	79	76	271	257	59	NA
A - 7		42.5	75.660	1.40	1.55	1.55	5	79	76	272	257	59	NA
A - 6		45.0	77.440	1.20	1.33	1.33	4	79	77	272	257	60	NA
A - 5		47.5	79.127	1.10	1.22	1.22	4	79	77	272	257	60	NA
A - 4		50.0	80.801	1.00	1.11	1.11	4	79	77	271	256	60	NA
A - 3		52.5	82.365	1.10	1.22	1.22	4	79	77	271	256	60	NA
A - 2		55.0	83.991	1.20	1.33	1.33	4	79	76	271	256	60	NA
A - 1		57.5	85.783	1.20	1.33	1.33	4	78	76	271	255	61	NA
-	1652	60.0	87.355										
-													
-													
-													
-													
-													
						MAX =>	5						
Average Values		60.0	42.688	1.327	1.49	1.48		78		271			

EPA Method 3 for Molecular Weight Determination

Client Name	Covanta Projects, Inc.	**Project #**	10639
Plant Name	Huntington Resource Recovery Facility	**Fuel Type**	MSW
Plant City, State	East Northport, NY	**Fo Min**	
Test Location	Unit 2 FF Outlet	**Fo Max**	

Date	08/12/09	**Run Number**	2-O-M8-1		**ORSAT ID**	2	**Leak Ck?**
Shared With			**Start Time**	941	**Stop Time**	1044	Y
Sample Analysis Time	**Carbon Dioxide Concentra.**	**Oxygen Concentra.**	**Oxygen Concentra. by difference**	**CO & Nitrogen Concentra.**	**Carbon Dioxide Difference**	**Oxygen Difference**	**Operator** CMW **Bag #**
	($\%CO_2$)	reading	($\%O_2$)	($\%CO+N_2$)	(M_d)	(ΔM_d)	OB5
hh:mm	reading	reading	reading	percent	lb/lb-mole	lb/lb-mole	**Fyrite #s**
1110	7.4	19.7	12.3	80.3	0.0	0.0	
TO	7.4	19.7	12.3	80.3	0.0	0.0	**Fo**
1122	7.4	19.7	12.3	80.3	0.0	0.0	
Averages	7.4		12.3	80.3	OK	OK	

Date	08/12/09	**Run Number**	2-O-M8-2		**ORSAT ID**	2	**Leak Ck?**
Shared With			**Start Time**	1237	**Stop Time**	1356	Y
Sample Analysis Time	**Carbon Dioxide Concentra.**	**Oxygen Concentra.**	**Oxygen Concentra. by difference**	**CO & Nitrogen Concentra.**	**Carbon Dioxide Difference**	**Oxygen Difference**	**Operator** JMA **Bag #**
	($\%CO_2$)	reading	($\%O_2$)	($\%CO+N_2$)	(M_d)	(ΔM_d)	OB-4
hh:mm	reading	reading	reading	percent	lb/lb-mole	lb/lb-mole	**Fyrite #s**
1412	7.3	19.7	12.4	80.3	0.1	0.0	
to	7.2	19.6	12.4	80.4	0.0	0.0	**Fo**
1430	7.2	19.6	12.4	80.4	0.1	0.0	
Averages	7.2		12.4	80.4	OK	OK	

Date	08/12/09	**Run Number**	2-O-M8-3		**ORSAT ID**	2	**Leak Ck?**
Shared With			**Start Time**	1417	**Stop Time**	1521	Y
Sample Analysis Time	**Carbon Dioxide Concentra.**	**Oxygen Concentra.**	**Oxygen Concentra. by difference**	**CO & Nitrogen Concentra.**	**Carbon Dioxide Difference**	**Oxygen Difference**	**Operator** CMW **Bag #**
	($\%CO_2$)	reading	($\%O_2$)	($\%CO+N_2$)	(M_d)	(ΔM_d)	OB5
hh:mm	reading	reading	reading	percent	lb/lb-mole	lb/lb-mole	**Fyrite #s**
1545	7.0	19.7	12.7	80.3	0.0	0.0	
to	7.0	19.7	12.7	80.3	0.0	0.0	**Fo**
1600	7.0	19.7	12.7	80.3	0.0	0.0	
Averages	7.0		12.7	80.3	OK	OK	

Date	08/12/09	**Run Number**			**ORSAT ID**	2	**Leak Ck?**
Shared With			**Start Time**		**Stop Time**		Y
Sample Analysis Time	**Carbon Dioxide Concentra.**	**Oxygen Concentra.**	**Oxygen Concentra. by difference**	**CO & Nitrogen Concentra.**	**Carbon Dioxide Difference**	**Oxygen Difference**	**Operator** CMW **Bag #**
	($\%CO_2$)	reading	($\%O_2$)	($\%CO+N_2$)	(M_d)	(ΔM_d)	
hh:mm	reading	reading	reading	percent	lb/lb-mole	lb/lb-mole	**Fyrite #s**
			0.0	100.0			
			0.0	100.0			**Fo**
			0.0	100.0			
Averages	#DIV/0!		0.0	#DIV/0!			

Signature:	[illegible]	Checked by:	[illegible]

EPA Method 4 for Percent Moisture Determination

Client Name	Covanta Projects, Inc.	**Project #**	10639
Plant Name	Huntington Resource Rec Fac	**Balance Type**	Electronic
Plant City, State	East Northport, NY	**Balance ID**	EB1
Sampling Location	Unit 2 FF Outlet	**Operator Name**	Blake Cone

Run Number	2-O-M8-1	2-O-M8-2	2-O-M8-3	
Test Date	08/12/09	08/12/09	08/12/09	
Reagent Box ID				

Impinger Reagent	IPA	mL	mL	mL	mL
Final Catch Weight	grams	428.0	438.6	440.9	
Initial Tare Weight	grams	327.5	328.0	329.5	
Net Moisture Caught	grams	100.5	110.6	111.4	0.0

Impinger Reagent	H2O2	mL	mL	mL	mL
Final Catch Weight	grams	493.3	497.0	492.8	
Initial Tare Weight	grams	443.5	448.0	443.0	
Net Moisture Caught	grams	49.8	49.0	49.8	0.0

Impinger Reagent		mL	mL	mL	mL
Final Catch Weight	grams				
KMNo4 Weight	grams				
KMnO4 g/mL	1.1				
Initial Jar Tare Weight	grams				
Net Moisture Caught	grams	0.0	0.0	0.0	0.0

Silica Gel	SG	grams	grams	grams	grams
Final Catch Weight	grams	278.0	246.5	289.6	
Initial Tare Weight	grams	265.5	235.0	278.0	
Net Moisture Caught	grams	12.5	11.5	11.6	0.0

Total Catch	grams	162.8	171.1	172.8	0.0

Signature:		**Checked By:**	

ISOKINETIC SAMPLING TRAIN DATASHEET - METHOD M8

Client Name	Covanta Projects, Inc.	Run #	2-O-M8-1		
Plant Name	Huntington Resource Recovery Facility	Project #	10639	Run Start	941
Plant City, State	East Northport, NY	Personnel	JMA/RP	Run End	1044
Test Location	Unit #2 FF Outlet	Tester Signature			
Date of Test	08/12/09	Checked By			

Isokinetic Factor Setup		Pressures		Sampling Equipment			Filter ID & Tares		Actuals
ΔH @ 0.75 SCFM	1.650	Pbar	29.8	Meter Console #		T2			CO_2
Meter Calibration Factor	0.9874	Pstatic	-14.50	Ideal Nozzle Diameter		0.242			7.4
Pitot Tube Coefficient	0.84	Tstd, °F	68	Nozzle #		GN712			O_2
Estimated DGM Temp	85	Pstd	29.92	Actual Nozzle Diameter		0.213	XAD ID & Tares		12.3
Estimated Stack Temp or M2 Avg.	290	Diluent		Probe Lgth/ID #	6'	158			CO
Estimated Delta P or M2 Avg.	1.00	Estimates		Liner Material		BG	Y_{qa}		0.0
Estimated Moisture Content	17.0	CO_2	8.0	Filter Box #		HB6	0.9962		N_2
Estimated Dry Molecular Weight	29.76	O_2	12.0	Cold Box ID #		CB9	-0.89%		80.3
Estimated Velocity, ft/sec	69.6	CO	0.0	Umbilical ID #		U50-7	PASS		H_20
K Factor (delta H/delta P)	1.05	N_2	80.0	TC ID #s		158			162.8

Equipment Checks		PRE	POST	Leak Checks	1	2	3	4	5	6	Status
Tambient		72	75	DGM initial							0.000
Thermocouples		Y	Y	Vacuum	15	8					15
Pitots		Y	Y	Leak Rate	0.001	0.002					OK
Tedlar Bag	OB-5	Y	Y	DGM final							0.000

Point #	Clock Time	Test Time	Dry Gas Meter Reading	Velocity Head	Desired Orifice ΔH	Actual Orifice ΔH	Pump Vac.	DGM Inlet Temp	DGM Outlet Temp	Stack Temp	Filter Temp	Imp. Exit Temp	Cond. Exit Temp
	24 hr	min	ft^3	in H_2O	in H_2O	in H_2O	in Hg	°F	°F	°F	°F	°F	°F
A - 12	941	0.0	877.373	1.90	1.99	1.99	6	79	79	272	254	65	NA
A - 11		2.5	879.420	1.60	1.68	1.68	6	80	79	271	254	64	NA
A - 10		5.0	881.392	1.60	1.68	1.68	5	81	78	272	254	61	NA
A - 9		7.5	883.141	1.50	1.57	1.57	5	82	79	273	254	60	NA
A - 8		10.0	884.973	1.50	1.57	1.57	5	82	79	273	256	62	NA
A - 7		12.5	886.778	1.30	1.36	1.36	5	82	79	273	255	61	NA
A - 6		15.0	888.487	1.20	1.26	1.26	5	83	79	273	257	59	NA
A - 5		17.5	890.158	1.10	1.15	1.15	5	84	78	272	257	58	NA
A - 4		20.0	891.742	1.10	1.15	1.15	4	84	79	270	257	58	NA
A - 3		22.5	893.339	0.98	1.03	1.03	4	84	79	270	257	59	NA
A - 2		25.0	894.832	0.92	0.97	0.97	4	83	79	270	255	59	NA
A - 1		27.5	896.349	0.92	0.97	0.97	4	83	79	270	257	59	NA
B - 12	1011	30.0	897.856	0.91	0.96	0.96	4	82	79	270	256	59	NA
B - 11	1014	32.5	899.485	1.30	1.36	1.36	5	81	79	269	257	61	NA
B - 10		35.0	901.165	1.30	1.36	1.36	5	82	79	271	257	57	NA
B - 9		37.5	902.833	1.40	1.47	1.47	5	83	79	271	257	57	NA
B - 8		40.0	904.568	1.50	1.57	1.57	5	85	79	272	257	58	NA
B - 7		42.5	906.362	1.60	1.68	1.68	6	84	80	272	256	59	NA
B - 6		45.0	908.295	1.30	1.36	1.36	6	84	80	271	254	59	NA
B - 5		47.5	909.920	1.10	1.15	1.15	5	83	80	271	257	59	NA
B - 4		50.0	911.429	1.00	1.05	1.05	4	83	80	272	257	59	NA
B - 3		52.5	912.929	1.00	1.05	1.05	4	83	79	270	257	59	NA
B - 2		55.0	914.448	1.00	1.05	1.05	4	83	79	270	256	59	NA
B - 1		57.5	915.955	0.85	0.89	0.89	4	84	79	270	258	59	NA
-	1044	60.0	917.363										
-													
-													
-													
-													
-													
						MAX =>	6						
Average Values		60.0	39.990	1.230	1.31	1.31		81		271			

ISOKINETIC SAMPLING TRAIN DATASHEET - METHOD M8

Client Name	Covanta Projects, Inc.	Run #	2-O-M8-2		
Plant Name	Huntington Resource Recovery Facility	Project #	10639	Run Start	1237
Plant City, State	East Northport, NY	Personnel	JMA/RP	Run End	1356
Test Location	Unit #2 FF Outlet	Tester Signature			
Date of Test	08/12/09	Checked By			

Isokinetic Factor Setup		Pressures		Sampling Equipment			Filter ID & Tares		Actuals
ΔH @ 0.75 SCFM	1.650	Pbar	29.8	Meter Console #		T2			CO_2
Meter Calibration Factor	0.9874	Pstatic	-14.50	Ideal Nozzle Diameter		0.242			7.2
Pitot Tube Coefficient	0.84	Tstd, °F	68	Nozzle #		GN834A			O_2
Estimated DGM Temp	85	Pstd	29.92	Actual Nozzle Diameter		0.217	XAD ID & Tares		12.4
Estimated Stack Temp or M2 Avg.	290	Diluent		Probe Lgth/ID #	6'	161			CO
Estimated Delta P or M2 Avg.	1.000	Estimates		Liner Material		BG	Y_{qa}		0.0
Estimated Moisture Content	17.0	CO_2	8.0	Filter Box #		HB6	0.9866		N_2
Estimated Dry Molecular Weight	29.76	O_2	12.0	Cold Box ID #		CB16	0.08%		80.4
Estimated Velocity, ft/sec	69.6	CO	0.0	Umbilical ID #		U50-7	PASS		H_20
K Factor (delta H/delta P)	1.13	N_2	80.0	TC ID #s		161			171.1

Equipment Checks		PRE	POST	Leak Checks	1	2	3	4	5	6	Status
Tambient		75	75	DGM initial							0.000
Thermocouples		Y	Y	Vacuum	15	6					15
Pitots		Y	Y	Leak Rate	0.002	0.001					OK
Tedlar Bag	OB-4	Y	Y	DGM final							0.000

Point #	Clock Time	Test Time	Dry Gas Meter Reading	Velocity Head	Desired Orifice ΔH	Actual Orifice ΔH	Pump Vac.	DGM Inlet Temp	DGM Outlet Temp	Stack Temp	Filter Temp	Imp. Exit Temp	Cond. Exit Temp
	24 hr	min	ft^3	in H_2O	in H_2O	in H_2O	in Hg	°F	°F	°F	°F	°F	°F
A - 12	1237	0.0	961.540	1.60	1.81	1.81	4	81	81	270	254	63	NA
A - 11		2.5	963.525	1.70	1.92	1.92	4	81	81	270	255	61	NA
A - 10		5.0	965.474	1.50	1.70	1.70	4	82	80	270	255	55	NA
A - 9		7.5	967.370	1.40	1.58	1.58	4	83	81	270	254	56	NA
A - 8		10.0	969.220	1.30	1.47	1.47	4	83	81	270	255	57	NA
A - 7		12.5	971.260	1.30	1.47	1.47	4	83	80	270	254	57	NA
A - 6		15.0	972.742	1.30	1.47	1.47	4	83	80	270	257	58	NA
A - 5		17.5	974.502	1.10	1.24	1.24	4	83	80	271	257	58	NA
A - 4		20.0	976.203	0.95	1.07	1.07	4	83	80	271	256	59	NA
A - 3		22.5	977.738	0.92	1.04	1.04	3	83	80	270	258	59	NA
A - 2		25.0	979.272	0.94	1.06	1.06	3	83	80	271	257	60	NA
A - 1	1305	27.5	980.820	0.94	1.06	1.06	3	83	80	271	257	60	NA
B - 12	1314	30.0	982.353	0.93	1.05	1.05	3	79	79	271	257	63	NA
B - 11	1316	32.5	983.927	1.00	1.13	1.13	3	79	79	270	257	62	NA
B - 10	1329	35.0	985.442	1.10	1.24	1.24	4	78	78	271	256	63	NA
B - 9		37.5	987.113	1.10	1.24	1.24	4	79	78	271	257	53	NA
B - 8		40.0	988.802	1.10	1.24	1.24	4	80	78	272	256	52	NA
B - 7		42.5	990.468	1.20	1.36	1.36	4	80	78	272	256	54	NA
B - 6		45.0	992.181	1.00	1.13	1.13	4	80	78	272	256	54	NA
B - 5		47.5	993.785	0.91	1.03	1.03	4	80	78	272	257	55	NA
B - 4		50.0	995.303	0.91	1.03	1.03	3	80	78	272	256	55	NA
B - 3		52.5	996.810	0.88	1.00	1.00	3	80	78	271	256	56	NA
B - 2		55.0	998.324	0.86	0.97	0.97	3	80	78	270	256	55	NA
B - 1		57.5	999.816	0.94	1.06	1.06	3	80	78	270	256	55	NA
-	1356	60.0	1001.323										
-													
-													
-													
-													
-													
						MAX =>	4						
Average Values		60.0	39.783	1.108	1.27	1.27		80		271			

ISOKINETIC SAMPLING TRAIN DATASHEET - METHOD M8

Client Name	Covanta Projects, Inc.	Run #	2-O-M8-3		
Plant Name	Huntington Resource Recovery Facility	Project #	10639	Run Start	1417
Plant City, State	East Northport, NY	Personnel	JMA/RP	Run End	1521
Test Location	Unit #2 FF Outlet	Tester Signature			
Date of Test	08/12/09	Checked By			

Isokinetic Factor Setup		Pressures		Sampling Equipment			Filter ID & Tares		Actuals
ΔH @ 0.75 SCFM	1.650	Pbar	29.8	Meter Console #		T2			CO_2
Meter Calibration Factor	0.9874	Pstatic	-14.50	Ideal Nozzle Diameter		0.242			7.0
Pitot Tube Coefficient	0.84	Tstd, °F	68	Nozzle #		GN712			O_2
Estimated DGM Temp	85	Pstd	29.92	Actual Nozzle Diameter		0.213	XAD ID & Tares		12.7
Estimated Stack Temp or M2 Avg.	290	Diluent		Probe Lgth/ID #	6'	158			CO
Estimated Delta P or M2 Avg.	1.000	Estimates		Liner Material		BG	Y_{qa}		0.0
Estimated Moisture Content	17.0	CO_2	8.0	Filter Box #		HB6	0.9885		N_2
Estimated Dry Molecular Weight	29.76	O_2	12.0	Cold Box ID #		CB9	-0.11%		80.3
Estimated Velocity, ft/sec	69.6	CO	0.0	Umbilical ID #		U50-7	PASS		H_20
K Factor (delta H/delta P)	1.05	N_2	80.0	TC ID #s		158			172.8

Equipment Checks		PRE	POST	Leak Checks	1	2	3	4	5	6	Status
Tambient		75	73	DGM initial							0.000
Thermocouples		Y	Y	Vacuum	15	7					15
Pitots		Y	Y	Leak Rate	0.001	0.001					OK
Tedlar Bag	OB-5	Y	Y	DGM final							0.000

Point #	Clock Time	Test Time	Dry Gas Meter Reading	Velocity Head	Desired Orifice ΔH	Actual Orifice ΔH	Pump Vac.	DGM Inlet Temp	DGM Outlet Temp	Stack Temp	Filter Temp	Imp. Exit Temp	Cond. Exit Temp
	24 hr	min	ft^3	in H_2O	in H_2O	in H_2O	in Hg	°F	°F	°F	°F	°F	°F
A - 12	1417	0.0	2.833	1.20	1.26	1.26	5	77	77	270	253	62	NA
A - 11		2.5	4.552	1.30	1.36	1.36	5	78	77	270	253	57	NA
A - 10		5.0	6.223	1.40	1.47	1.47	5	78	77	271	253	56	NA
A - 9		7.5	7.791	1.30	1.36	1.36	5	79	77	271	255	55	NA
A - 8		10.0	9.972	1.40	1.47	1.47	5	80	77	272	255	55	NA
A - 7		12.5	11.449	1.40	1.47	1.47	5	81	77	273	255	56	NA
A - 6		15.0	13.297	1.50	1.57	1.57	5	81	77	271	258	56	NA
A - 5		17.5	15.003	1.00	1.05	1.05	5	82	77	271	256	56	NA
A - 4		20.0	16.582	0.98	1.03	1.03	4	82	77	271	256	57	NA
A - 3		22.5	18.113	0.99	1.04	1.04	4	81	78	270	257	58	NA
A - 2		25.0	19.651	1.00	1.05	1.05	4	81	78	270	255	58	NA
A - 1		27.5	21.173	1.00	1.05	1.05	4	81	78	270	256	58	NA
B - 12	1447	30.0	22.797	1.80	1.89	1.89	6	80	77	270	256	59	NA
B - 11	1451	32.5	24.580	1.70	1.78	1.78	6	80	77	270	256	56	NA
B - 10		35.0	26.593	1.60	1.68	1.68	6	81	78	270	256	58	NA
B - 9		37.5	28.488	1.50	1.57	1.57	6	81	78	271	257	59	NA
B - 8		40.0	30.252	1.50	1.57	1.57	6	81	78	271	256	60	NA
B - 7		42.5	32.127	1.50	1.57	1.57	6	81	78	271	255	60	NA
B - 6		45.0	34.010	1.30	1.36	1.36	6	81	78	272	257	61	NA
B - 5		47.5	35.740	1.10	1.15	1.15	5	81	78	271	256	61	NA
B - 4		50.0	37.379	1.10	1.15	1.15	5	81	78	271	256	61	NA
B - 3		52.5	39.000	1.10	1.15	1.15	5	81	78	271	254	61	NA
B - 2		55.0	40.638	1.10	1.15	1.15	5	81	78	271	254	62	NA
B - 1		57.5	42.232	1.10	1.15	1.15	5	81	78	271	254	62	NA
-	1521	60.0	43.820										
.													
.													
.													
.													
.													
						MAX =>	6						
Average Values		60.0	40.987	1.275	1.35	1.35		79		271			

ISOKINETIC SAMPLING TRAIN DATASHEET - METHOD 4

Client Name	Covanta Projects, Inc.	**Run #**	3-O-M4-1		
Plant Name	Huntington Resource Recovery Facility	**Project #**	10639	Run Start	855
Plant City, State	East Northport, NY	**Personnel**	CAN	Run End	1310
Test Location	Unit #3 FF Outlet	**Tester Signature**			
Date of Test	08/11/09	**Checked By**			

Isokinetic Factor Setup		Pressures		Sampling Equipment			Filter ID & Tares		Actuals
ΔH @ 0.75 SCFM	1.659	Pbar	29.7	Meter Console #		T7			CO_2
Meter Calibration Factor	1.0027	Pstatic	-14.90	Ideal Nozzle Diameter		0.242			7.7
Pitot Tube Coefficient	0.84	Tstd, °F	68	Nozzle #		NA	XAD ID & Tares		O_2
Estimated DGM Temp	85	Pstd	29.92	Actual Nozzle Diameter		NA			12.0
Estimated Stack Temp or M2 Avg.	290	Diluent		Probe Lgth/ID #	6'	154			CO
Estimated Delta P or M2 Avg.	1.00	Estimates		Liner Material		BG	Y_{qa}		0.0
Estimated Moisture Content	17.0	CO_2	8.0	Filter Box #		HB3	0.9668		N_2
Estimated Dry Molecular Weight	29.76	O_2	12.0	Cold Box ID #		CB20	3.58%		80.3
Estimated Velocity, ft/sec	69.8	CO	0.0	Umbilical ID #		U50-9	PASS		H_20
K Factor (delta H/delta P)	######	N_2	80.0	TC ID #s		154			397.2

Equipment Checks		PRE	POST	Leak Checks	1	2	3	4	5	6	Status
Tambient		79	81	DGM initial							0.000
Thermocouples		Y	Y	Vacuum	15	4					15
Pitots		Y	Y	Leak Rate	0.008	0.002					OK
Tedlar Bag	NA	Y	Y	DGM final							0.000

Point #	Clock Time	Test Time	Dry Gas Meter Reading	Velocity Head	Desired Orifice ΔH	Actual Orifice ΔH	Pump Vac.	DGM Inlet Temp	DGM Outlet Temp	Stack Temp	Filter Temp	Imp. Exit Temp	Cond. Exit Temp
	24 hr	min	ft^3	in H_2O	in H_2O	in H_2O	in Hg	°F	°F	°F	°F	°F	°F
B - 12	855	0.0	200.500	1.20	######	0.50	2	79	79	277	267	67	NA
B - 11		10.0	204.780	1.22	######	0.50	2	81	79	279	268	66	NA
B - 10		20.0	209.080	1.25	######	0.50	2	83	81	279	268	65	NA
B - 9		30.0	213.375	1.25	######	0.50	3	83	81	279	258	64	NA
B - 8		40.0	217.640	1.20	######	0.50	3	82	81	278	258	65	NA
B - 7		50.0	221.920	1.20	######	0.50	3	85	82	277	258	60	NA
B - 6		60.0	226.220	0.98	######	0.50	3	86	83	275	258	59	NA
B - 5		70.0	230.480	0.93	######	0.50	3	85	85	275	260	59	NA
B - 4		80.0	234.730	1.10	######	0.50	3	86	85	273	260	60	NA
B - 3		90.0	239.020	1.20	######	0.50	3	86	85	272	260	61	NA
B - 2		100.0	243.360	1.15	######	0.50	3	85	85	268	259	61	NA
B - 1	1055/	110.0	247.700	1.07	######	0.50	3	85	85	269	259	61	NA
A - 12		120.0	252.300	1.60	######	0.50	4	86	85	277	259	64	NA
A - 11		130.0	256.290	1.60	######	0.50	4	87	86	278	259	63	NA
A - 10		140.0	260.530	1.40	######	0.50	4	87	85	278	260	63	NA
A - 9		150.0	264.900	1.30	######	0.50	4	87	85	277	260	63	NA
A - 8		160.0	269.240	1.33	######	0.50	4	87	86	278	259	64	NA
A - 7		170.0	273.485	1.30	######	0.50	4	87	86	278	259	65	NA
A - 6		180.0	277.720	1.10	######	0.50	4	87	86	278	260	61	NA
A - 5		190.0	282.032	1.08	######	0.50	4	88	87	279	251	60	NA
A - 4		200.0	286.320	1.12	######	0.50	4	89	87	278	255	60	NA
A - 3		210.0	290.600	1.10	######	0.50	4	89	88	274	253	61	NA
A - 2		220.0	294.890	1.10	######	0.50	4	90	88	276	253	61	NA
A - 1		230.0	299.160	1.03	######	0.50	4	90	88	276	252	61	NA
-	1310	240.0	303.461										

Continued on Page 2

Client Name	Covanta Projects, Inc.	Run #	3-O-M4-1	
Plant Name	Huntington Resource Recovery Facility	Project #	10639	Page 2 of 2

Point #	Clock Time	Test Time	Dry Gas Meter Reading	Velocity Head	Desired Orifice ΔH	Actual Orifice ΔH	Pump Vac.	DGM Inlet Temp	DGM Outlet Temp	Stack Temp	Filter Temp	Imp. Exit Temp	Cond. Exit Temp
	24 hr	min	ft^3	in H_2O	in H_2O	in H_2O	in Hg	°F	°F	°F	°F	°F	°F
						MAX =>	4						
Average Values		240.0	102.961	1.195		0.50		85		276			

ISOKINETIC SAMPLING TRAIN DATASHEET - METHOD 4

Client Name	Covanta Projects, Inc.	**Run #**	3-O-M4-2		
Plant Name	Huntington Resource Recovery Facility	**Project #**	10639	Run Start	1318
Plant City, State	East Northport, NY	**Personnel**	CAN	Run End	1717
Test Location	Unit #3 FF Outlet	**Tester Signature**			
Date of Test	08/11/09	**Checked By**			

Isokinetic Factor Setup		Pressures		Sampling Equipment			Filter ID & Tares		Actuals
ΔH @ 0.75 SCFM	1.659	Pbar	29.7	Meter Console #		T7			CO_2
Meter Calibration Factor	1.0027	Pstatic	-14.90	Ideal Nozzle Diameter		0.242			8.0
Pitot Tube Coefficient	0.84	Tstd, °F	68	Nozzle #		NA	XAD ID & Tares		O_2
Estimated DGM Temp	85	Pstd	29.92	Actual Nozzle Diameter		NA			11.7
Estimated Stack Temp or M2 Avg.	290	Diluent		Probe Lgth/ID #	6'	154			CO
Estimated Delta P or M2 Avg.	1.000	Estimates		Liner Material		BG	Y_{qa}		0.0
Estimated Moisture Content	17.0	CO_2	8.0	Filter Box #		HB3	0.9711		N_2
Estimated Dry Molecular Weight	29.76	O_2	12.0	Cold Box ID #		CB20	3.15%		80.3
Estimated Velocity, ft/sec	69.8	CO	0.0	Umbilical ID #		U50-9	PASS		H_20
K Factor (delta H/delta P)	######	N_2	80.0	TC ID #s		154			240.0

Equipment Checks		PRE	POST	Leak Checks	1	2	3	4	5	6	Status
Tambient		81	82	DGM initial							0.000
Thermocouples		Y	Y	Vacuum	15	6					15
Pitots		Y	Y	Leak Rate	0.002	0.000					OK
Tedlar Bag	NA	Y	Y	DGM final							0.000

Point #	Clock Time	Test Time	Dry Gas Meter Reading	Velocity Head	Desired Orifice ΔH	Actual Orifice ΔH	Pump Vac.	DGM Inlet Temp	DGM Outlet Temp	Stack Temp	Filter Temp	Imp. Exit Temp	Cond. Exit Temp
	24 hr	min	ft^3	in H_2O	in H_2O	in H_2O	in Hg	°F	°F	°F	°F	°F	°F
B - 12	1318	0.0	303.800	1.60	######	0.50	3	89	88	272	245	66	NA
B - 11		10.0	308.175	1.50	######	0.50	3	92	90	276	261	65	NA
B - 10		20.0	312.580	1.30	######	0.50	3	91	89	277	260	61	NA
B - 9		30.0	316.790	1.20	######	0.50	3	91	89	277	261	61	NA
B - 8		40.0	320.950	1.10	######	0.50	3	91	89	278	260	60	NA
B - 7		50.0	325.275	1.20	######	0.50	3	90	89	278	261	62	NA
B - 6		60.0	329.540	1.00	######	0.50	3	91	89	278	261	62	NA
B - 5		70.0	333.825	1.00	######	0.50	3	91	89	280	261	64	NA
B - 4		80.0	338.025	0.95	######	0.50	3	90	89	278	260	65	NA
B - 3		90.0	342.240	0.87	######	0.50	3	90	88	275	259	65	NA
B - 2		100.0	346.475	0.81	######	0.50	3	90	89	261	246	62	NA
B - 1	1518/	110.0	350.690	0.84	######	0.50	3	90	89	266	245	63	NA
A - 12	1547	120.0	354.940	1.30	######	0.50	3	89	89	279	248	66	NA
A - 11		130.0	359.285	1.20	######	0.50	3	91	89	280	247	64	NA
A - 10		140.0	363.685	1.15	######	0.50	4	91	89	280	244	66	NA
A - 9	1617	150.0	368.095	1.10	######					279			
A - 8				1.00	######					279			
A - 7				1.10	######					278			
A - 6				0.94	######					277			
A - 5				0.88	######					277			
A - 4				0.88	######					276			
A - 3				0.95	######					276			
A - 2				0.96	######					275			
A - 1				0.94	######					274			
-													

Continued on Page 2

Client Name	Covanta Projects, Inc.	Run #	3-O-M4-2		
Plant Name	Huntington Resource Recovery Facility	Project #	10639	Page	2 of 2

Point #	Clock Time	Test Time	Dry Gas Meter Reading	Velocity Head	Desired Orifice ΔH	Actual Orifice ΔH	Pump Vac.	DGM Inlet Temp	DGM Outlet Temp	Stack Temp	Filter Temp	Imp. Exit Temp	Cond. Exit Temp
	24 hr	min	ft^3	in H_2O	in H_2O	in H_2O	in Hg	°F	°F	°F	°F	°F	°F
-													
-													
-													
-													
-													
-													
-													
-													
-													
-													
-													
-													
-													
-													
-													
-													
-													
-													
-													
-													
-													
-													
-													
-													
-													
-													
-													
-													
-													
-													
-													
-													
-													
-													
-													
-													
-													
-													
-													
-													
-													
-													
-													
-													
-													
						MAX =>	4						
Average Values		150.0	64.295	1.065		0.50		90		276			

EPA Method 4 for Percent Moisture Determination

Client Name	Covanta Projects, Inc.	**Project #**	10639
Plant Name	Huntington Resource Rec Fac	**Balance Type**	Electronic
Plant City, State	East Northport, NY	**Balance ID**	EB1
Sampling Location	Unit #3 FF Outlet	**Operator Name**	~~Jeff Coppedge~~ RC

Run Number	3-O-M4-1	3-O-M4-2		
Test Date	08/11/09	08/11/09		
Reagent Box ID				

Impinger Reagent	HNO3/H2O2	mL	mL	mL	mL
Final Catch Weight	grams	579.7	429.6		
Initial Tare Weight	grams	200.0	200.0		
Net Moisture Caught	grams	379.7	229.6	0.0	0.0

Impinger Reagent	IMPIN 3	mL	mL	mL	mL
Final Catch Weight	grams				
Initial Tare Weight	grams				
Net Moisture Caught	grams	0.0	0.0	0.0	0.0

Impinger Reagent	KMnO4/H2SO4	mL	mL	mL	mL
Final Catch Weight	grams				
KMNo4 Weight	grams				
KMnO4 g/mL	1.1				
Initial Jar Tare Weight	grams				
Net Moisture Caught	grams	0.0	0.0	0.0	0.0

Silica Gel	SG	grams	grams	grams	grams
Final Catch Weight	grams	261.5	261.4		
Initial Tare Weight	grams	244.0	251.0		
Net Moisture Caught	grams	17.5	10.4	0.0	0.0

Total Catch	grams	397.2	240.0	0.0	0.0

Signature:		**Checked By:**	

APPENDIX E

Reference Method Calibration Data

NOx Converter Efficiency Test

Operator:	Bill Harris
Plant Name:	Huntington RRF
Location:	Huntington, NY
Date:	8/11/2009
Analyzer:	Thermo Environmental NOx 10S
Analyzer SN#:	10S-45502-274

NO2/NO Converter Efficiency Gas:	50.51 ppm NO2
NOx Analyzer Response:	50.2 ppm NO2
Converter Efficiency:	99.4 %

EPA EMTIC Guidline Document GD-030 requires NO2 to NO conversion must be >90%.

Interference Test

Analyzer Type: TECO Model 48C
Serial Number: 48CHL60783-326

Span: 100
Date: 25-Apr-98

Parameter	Concentration		Analyzer Response	% of Span
O2/N2	19.99	%	0.1	0.1
SO2/N2	956.8	ppm	0.0	0.0
NOx/N2	442.0	ppm	0.0	0.0
CO2/N2	17.35	%	0.8	0.8
			Totals	0.9

Specification: Sum of Interference Responses Must Not Exceed 2% of Span

TESTAR, INC.

Interference Test

Analyzer Type: TELEDYNE API 300EM
Serial Number: 224

Span: 100
Date: 20-Jul-07

CO/CO2 ANALYZER (Measuring CO2)

Parameter	Concentration		Analyzer Response	% of Span
O2/N2	22.00	%	0.0	0.0
SO2/N2	487.0	ppm	0.0	0.0
NOx/N2	486.0	ppm	0.0	0.0
CO/N2	95	%	0.0	0.0
			Totals	0.0

Specification: Sum of Interference Responses Must Not Exceed 2% of Span

TESTAR, INC.

Interference Test

Analyzer Type: Western Research
Serial Number: 721M-8064-6
Monitor Type: Sulfur Dioxide

Span: 500
Date: 25-Apr-98

Parameter	Concentration		Analyzer Response	% of Span
CO/N2	891.0	ppm	0.0	0.0
O2/N2	19.99	ppm	0.0	0.0
NOx/N2	442.0	%	0.0	0.0
CO2/N2	17.35	%	0.0	0.0
			Totals	0.0

Specification: Sum of Interference Responses Must Not Exceed 2% of Span

TESTAR, INC.

Interference Test

Analyzer Type: Western Research
Serial Number: 721M-8062-2
Monitor Type: Sulfur Dioxide

Span: 500
Date: 25-Apr-98

Parameter	Concentration		Analyzer Response	% of Span
CO/N2	891.0	ppm	0.0	0.0
O2/N2	19.99	ppm	0.0	0.0
NOx/N2	442.0	%	0.0	0.0
CO2/N2	17.35	%	0.0	0.0
			Totals	0.0

Specification: Sum of Interference Responses Must Not Exceed 2% of Span

TESTAR, INC.

Interference Test

Analyzer Type: Servomex 1420 O2
Serial Number: 1420/B175

Span: 25
Date: 25-Apr-98

Parameter	Concentration		Analyzer Response	% of Span
CO/N2	891.0	ppm	0.0	0.0
SO2/N2	956.8	ppm	0.0	0.0
NOx/N2	442.0	%	0.1	0.4
CO2/N2	17.35	%	0.0	0.0
			Totals	0.4

Specification: Sum of Interference Responses Must Not Exceed 2% of Span

TESTAR, INC.

Interference Test

Analyzer Type: California Analytical 100P
Serial Number: 8K12007

Span: 25
Date: 1-Jun-09

Parameter	Concentration		Analyzer Response	% of Span
CO/N2	92.08	ppm	0.0	0.0
SO2/N2	487	ppm	0.0	0.0
NOx/N2	244.9	%	0.0	0.0
CO2/N2	17.79	%	0.0	0.0
			Totals	0.0

Specification: Sum of Interference Responses Must Not Exceed 2% of Span

TESTAR, INC.

Interference Test

Analyzer Type: TECO 10S
Serial Number: 10S-45502-274

Span: 500
Date: 25-Apr-98

Parameter	Concentration		Analyzer Response	% of Span
CO/N2	891.0	ppm	0.0	0.0
SO2/N2	956.8	ppm	0.0	0.0
CO2	17.35	%	0.0	0.0
O2	19.99	%	0.0	0.0
			Totals	0.0

Specification: Sum of Interference Responses Must Not Exceed 2% of Span

TESTAR, INC.

Interference Test

Analyzer Type: CALIF ANALYTICAL ZRH
Serial Number: A6J836T

Span: 20
Date: 20-Jul-07

Parameter	Concentration		Analyzer Response	% of Span
CO/N2	95.0	ppm	0.0	0.0
SO2/N2	487.0	ppm	0.0	0.0
NOx/N2	486.0	ppm	0.0	0.0
O2	22.0	%	0.0	0.0
			Totals	0.0

Specification: Sum of Interference Responses Must Not Exceed 2% of Span

TESTAR, INC.

Airgas

Airgas
630 United Drive
Durham, NC 27713
(919) 544-3772
Fax (919) 544-6297
www.airgas.com

CERTIFICATE OF ANALYSIS
Grade of Product: EPA Protocol

Part Number:	E03NI81E15A37P2	Reference Number:	122-124178453-2
Cylinder Number:	XC033526B	Cylinder Volume:	150 Cu.Ft.
Laboratory:	ASG - Durham - NC	Cylinder Pressure:	2015 PSIG
Analysis Date:	May 21, 2009	Valve Outlet:	590

Expiration Date: May 21, 2012

Certification performed in accordance with "EPA Traceability Protocol (Sept. 1997)" using the assay procedures listed. Analytical Methodology does not require correction for analytical interferences. This cylinder has a total analytical uncertainty as stated below with a confidence level of 95%. There are no significant impurities which affect the use of this calibration mixture. All concentrations are on a volume/volume basis unless otherwise noted.
Do Not Use This Cylinder below 150 psig.i.e. 1 Mega Pascal

ANALYTICAL RESULTS

Component	Requested Concentration	Actual Concentration	Protocol Method	Total Relative Uncertainty
CARBON DIOXIDE	9.000 %	8.870 %	G1	+/- 1% NIST Traceable
OXYGEN	10.00 %	9.934 %	G1	+/- 1% NIST Traceable
NITROGEN	Balance			

CALIBRATION STANDARDS

Type	Lot ID	Cylinder No	Concentration	Expiration Date
NTRM	07120704	CC214716	6.986% CARBON DIOXIDE/NITROGEN	May 01, 2011
NTRM	090602	CC262135	9.961% OXYGEN/NITROGEN	Jan 15, 2013

ANALYTICAL EQUIPMENT

Instrument/Make/Model	Analytical Principle	Last Multipoint Calibration
Horiba VIA-510 CO2 (0.5-20%)	Infrared	May 01, 2009
Horiba MPA-510 O2 (0.5-25%)	Paramagnetic	May 04, 2009

Triad Data Available Upon Request

Notes:ANW PART #781381

AB Moore

QA Approval

#5000/AD

Airgas
National Welders™

CERTIFICATE OF ANALYSIS: EPA PROTOCOL GAS MIXTURE

Customer:	Airgas National Welders,	Durham, NC	Reference #	88-116718	
NSG PO#	6733058		Certification Date:	5/12/2008	
Customer PO#			Expiration Date:	5/12/2011	
Cylinder #	SG895387ALB		Pressure, psig*	2000	CGA 590
ANALYTICAL INFORMATION			Product Code:	781381	

METHOD: This standard was analyzed according to EPA Traceability Protocol for Assay and Certification of Gaseous Calibration Standards: Procedure G1 (September 1997)

ANALYZED CYLINDER

Components	Certified Concentration	Analytical Accuracy**
Oxygen	21.9%	+/-1%
Carbon Dioxide	17.79%	+/-1%
Balance - Nitrogen		

REFERENCE STANDARD

Type/SRM Sample #	Cylinder #	Concentration	
NTRM #82745x	XC034320B	19.84 %	CO2/N2
GMIS (Traceable to NTRM # 060608)	CC29554	20.98 %	O2/N2

INSTRUMENTATION

Instrument/Model/Serial #		Last Date Calibrated	Analytical Method
Horiba MPA - 510 O2 (0.5-25%)	41499150042	04/28/08	Paramagnetic
Horiba VIA-510 CO2 (0.5-20%)	42399380022	05/05/08	Non-dispersive Infrared

Analyst: Richard Sykes Richard Sykes

This report states accurately the results of the investigation made upon the material submitted to the analytical laboratory. Every effort has been made to determine objectively the information requested. However, in connection with this report, Airgas National Welders shall have no liability in excess of established charge for this service. Assayed at Airgas National Welders, 630 United Drive, Durham, NC 27713 (919) 544-3772

*Do not use this standard when cylinder pressure is below 150 psig.

**Analytical accuracy includes typical known error sources which, at least, include precision of the analytical instrument.

NSG 020149L

Airgas

Airgas
630 United Drive
Durham, NC 27713
(919) 544-3772
Fax (919) 544-6297
www.airgas.com

CERTIFICATE OF ANALYSIS
Grade of Product: EPA Protocol

Part Number:	E02NI99E15AC3D3	Reference Number:	122-124182001-6
Cylinder Number:	CC41281	Cylinder Volume:	144 Cu.Ft.
Laboratory:	ASG - Durham - NC	Cylinder Pressure:	2015 PSIG
Analysis Date:	Jun 29, 2009	Valve Outlet:	660

Expiration Date: Jun 29, 2011

Certification performed in accordance with "EPA Traceability Protocol (Sept. 1997)" using the assay procedures listed. Analytical Methodology does not require correction for analytical interferences. This cylinder has a total analytical uncertainty as stated below with a confidence level of 95%. There are no significant impurities which affect the use of this calibration mixture. All concentrations are on a volume/volume basis unless otherwise noted.
Do Not Use This Cylinder below 150 psig.i.e. 1 Mega Pascal

ANALYTICAL RESULTS

Component	Requested Concentration	Actual Concentration	Protocol Method	Total Relative Uncertainty
SULFUR DIOXIDE	47.50 PPM	46.40 PPM	G1	+/- 1% NIST Traceable
NITROGEN	Balance			

CALIBRATION STANDARDS

Type	Lot ID	Cylinder No	Concentration	Expiration Date
NTRM	060613	CC208192	45.91PPM SULFUR DIOXIDE/NITROGEN	Sep 01, 2010

ANALYTICAL EQUIPMENT

Instrument/Make/Model	Analytical Principle	Last Multipoint Calibration
Nicolet 6700 SO2	FTIR	Jun 24, 2009

Triad Data Available Upon Request

Notes:ANW Part # 782281

QA Approval

Airgas

Airgas
630 United Drive
Durham, NC 27713
(919) 544-3772
Fax (919) 544-6297
www.airgas.com

CERTIFICATE OF ANALYSIS
Grade of Product: EPA Protocol

Part Number:	E02NI99E15AC3E8	Reference Number:	122-124175049-4
Cylinder Number:	CC61542	Cylinder Volume:	144 Cu.Ft.
Laboratory:	ASG - Durham - NC	Cylinder Pressure:	2015 PSIG
Analysis Date:	Apr 29, 2009	Valve Outlet:	660

Expiration Date: Apr 29, 2011

Certification performed in accordance with "EPA Traceability Protocol (Sept. 1997)" using the assay procedures listed. Analytical Methodology does not require correction for analytical interferences. This cylinder has a total analytical uncertainty as stated below with a confidence level of 95%. There are no significant impurities which affect the use of this calibration mixture. All concentrations are on a volume/volume basis unless otherwise noted.
Do Not Use This Cylinder below 150 psig.i.e. 1 Mega Pascal

ANALYTICAL RESULTS

Component	Requested Concentration	Actual Concentration	Protocol Method	Total Relative Uncertainty
SULFUR DIOXIDE	92.00 PPM	91.62 PPM	G1	+/- 2% NIST Traceable
NITROGEN	Balance			

CALIBRATION STANDARDS

Type	Lot ID	Cylinder No	Concentration	Expiration Date
NTRM	080615	CC255669	94.67PPM SULFUR DIOXIDE/NITROGEN	Oct 15, 2012

ANALYTICAL EQUIPMENT

Instrument/Make/Model	Analytical Principle	Last Multipoint Calibration
Nicolet 6700 SO2	FTIR	Apr 23, 2009

Triad Data Available Upon Request

Notes:ANW Part # 782304

QA Approval

#5000/AD

Airgas

Airgas
630 United Drive
Durham, NC 27713
(919) 544-3772
Fax (919) 544-6297
www.airgas.com

CERTIFICATE OF ANALYSIS
Grade of Product: EPA Protocol

Part Number:	E02NI99E15A0262	Reference Number:	122-124173837-3
Cylinder Number:	CC129649	Cylinder Volume:	144 Cu.Ft.
Laboratory:	ASG - Durham - NC	Cylinder Pressure:	2015 PSIG
Analysis Date:	Apr 13, 2009	Valve Outlet:	660

Expiration Date: Apr 13, 2011

Certification performed in accordance with "EPA Traceability Protocol (Sept. 1997)" using the assay procedures listed. Analytical Methodology does not require correction for analytical interferences. This cylinder has a total analytical uncertainty as stated below with a confidence level of 95%. There are no significant impurities which affect the use of this calibration mixture. All concentrations are on a volume/volume basis unless otherwise noted.
Do Not Use This Cylinder below 150 psig.i.e. 1 Mega Pascal

ANALYTICAL RESULTS

Component	Requested Concentration	Actual Concentration	Protocol Method	Total Relative Uncertainty
SULFUR DIOXIDE	240.0 PPM	236.90 PPM	G1	+/- 1% NIST Traceable
NITROGEN	Balance			

CALIBRATION STANDARDS

Type	Lot ID	Cylinder No	Concentration	Expiration Date
NTRM	080616	CC254615	247.0PPM SULFUR DIOXIDE/NITROGEN	Oct 15, 2012

ANALYTICAL EQUIPMENT

Instrument/Make/Model	Analytical Principle	Last Multipoint Calibration
Nicolet 6700 SO2	FTIR	Mar 23, 2009

Triad Data Available Upon Request

Notes:ANW Part#780781

QA Approval

Airgas

Airgas
630 United Drive
Durham, NC 27713
(919) 544-3772
Fax (919) 544-6297
www.airgas.com

CERTIFICATE OF ANALYSIS
Grade of Product: EPA Protocol

Part Number:	E02NI99E15A2656	Reference Number:	122-124179045-1
Cylinder Number:	XC022664B	Cylinder Volume:	144 Cu.Ft.
Laboratory:	ASG - Durham - NC	Cylinder Pressure:	2015 PSIG
Analysis Date:	Jun 04, 2009	Valve Outlet:	660

Expiration Date: Jun 04, 2011

Certification performed in accordance with "EPA Traceability Protocol (Sept. 1997)" using the assay procedures listed. Analytical Methodology does not require correction for analytical interferences. This cylinder has a total analytical uncertainty as stated below with a confidence level of 95%. There are no significant impurities which affect the use of this calibration mixture. All concentrations are on a volume/volume basis unless otherwise noted.
Do Not Use This Cylinder below 150 psig.i.e. 1 Mega Pascal

ANALYTICAL RESULTS

Component	Requested Concentration	Actual Concentration	Protocol Method	Total Relative Uncertainty
SULFUR DIOXIDE	485.0 PPM	490.7 PPM	G1	+/- 1% NIST Traceable
NITROGEN	Balance			

CALIBRATION STANDARDS

Type	Lot ID	Cylinder No	Concentration	Expiration Date
NTRM	060611	CC206009	475.0PPM SULFUR DIOXIDE/NITROGEN	Sep 01, 2010

ANALYTICAL EQUIPMENT

Instrument/Make/Model	Analytical Principle	Last Multipoint Calibration
Nicolet 6700 SO2	FTIR	May 26, 2009

Triad Data Available Upon Request

Notes:ANW PART #782281

QA Approval

Airgas

Airgas
630 United Drive
Durham, NC 27713
(919) 544-3772
Fax (919) 544-6297
www.airgas.com

CERTIFICATE OF ANALYSIS
Grade of Product: EPA Protocol

Part Number:	E03NI99E33A3091	Reference Number:	122-124173801-2
Cylinder Number:	FF837	Cylinder Volume:	32 Cu.Ft.
Laboratory:	ASG - Durham - NC	Cylinder Pressure:	2217 PSIG
Analysis Date:	Apr 15, 2009	Valve Outlet:	660

Expiration Date: Oct 15, 2009

Certification performed in accordance with "EPA Traceability Protocol (Sept. 1997)" using the assay procedures listed. Analytical Methodology does not require correction for analytical interferences. This cylinder has a total analytical uncertainty as stated below with a confidence level of 95%. There are no significant impurities which affect the use of this calibration mixture. All concentrations are on a volume/volume basis unless otherwise noted.
Do Not Use This Cylinder below 150 psig.i.e. 1 Mega Pascal

ANALYTICAL RESULTS

Component	Requested Concentration	Actual Concentration	Protocol Method	Total Relative Uncertainty
NITROGEN DIOXIDE	52.00 PPM	50.51 PPM	G1	+/- 1% NIST Traceable
NITROGEN	Balance			

CALIBRATION STANDARDS

Type	Lot ID	Cylinder No	Concentration	Expiration Date
GMIS	726635 PRM	CC208130	59.67PPM NITROGEN DIOXIDE/NITROGEN	Apr 13, 2009
GMIS	726635 PRM	CC208130	59.67PPM NITROGEN DIOXIDE/NITROGEN	Apr 16, 2010

ANALYTICAL EQUIPMENT

Instrument/Make/Model	Analytical Principle	Last Multipoint Calibration
TECO 42C NOX (0.05-100ppm)	Chemiluminescence	Apr 09, 2009

Triad Data Available Upon Request

Notes:ANW Part#780882

QA Approval

Airgas

Airgas National Welders
630 United Drive
Durham, NC 27713
(919) 544-3772
Fax (919) 544-6297
www.airgas.com

CERTIFICATE OF ANALYSIS
Grade of Product: EPA Protocol

Part Number:	E02NI99E15A0936	Reference Number:	122-124180318-2
Cylinder Number:	CC21496	Cylinder Volume:	144 Cu.Ft.
Laboratory:	ASG - Durham - NC	Cylinder Pressure:	2015 PSIG
Analysis Date:	Jun 16, 2009	Valve Outlet:	660

Expiration Date: Jun 16, 2011

Certification performed in accordance with "EPA Traceability Protocol (Sept. 1997)" using the assay procedures listed. Analytical Methodology does not require correction for analytical interferences. This cylinder has a total analytical uncertainty as stated below with a confidence level of 95%. There are no significant impurities which affect the use of this calibration mixture. All concentrations are on a volume/volume basis unless otherwise noted.
Do Not Use This Cylinder below 150 psig.i.e. 1 Mega Pascal

ANALYTICAL RESULTS

Component	Requested Concentration	Actual Concentration	Protocol Method	Total Relative Uncertainty
NITRIC OXIDE	240.0 PPM	240.6 PPM	G1	+/- 1% NIST Traceable
NITROGEN	Balance			
Total oxides of nitrogen		241.1 PPM		For Reference Only

CALIBRATION STANDARDS

Type	Lot ID	Cylinder No	Concentration	Expiration Date
NTRM	060602	CC207454	257.0PPM NITRIC OXIDE/NITROGEN	Jan 01, 2010

ANALYTICAL EQUIPMENT

Instrument/Make/Model	Analytical Principle	Last Multipoint Calibration
Nicolet 6700 NO	FTIR	May 20, 2009

Triad Data Available Upon Request

Notes:ANW Part # 780781

QA Approval

Airgas

Airgas
630 United Drive
Durham, NC 27713
(919) 544-3772
Fax (919) 544-6297
www.airgas.com

CERTIFICATE OF ANALYSIS
Grade of Product: EPA Protocol

Part Number:	E02NI99E33AC3L2	Reference Number:	122-124181436-1
Cylinder Number:	FF747	Cylinder Volume:	32 Cu.Ft.
Laboratory:	ASG - Durham - NC	Cylinder Pressure:	2217 PSIG
Analysis Date:	Jun 30, 2009	Valve Outlet:	660

Expiration Date: Jun 30, 2011

Certification performed in accordance with "EPA Traceability Protocol (Sept. 1997)" using the assay procedures listed. Analytical Methodology does not require correction for analytical interferences. This cylinder has a total analytical uncertainty as stated below with a confidence level of 95%. There are no significant impurities which affect the use of this calibration mixture. All concentrations are on a volume/volume basis unless otherwise noted.
Do Not Use This Cylinder below 150 psig.i.e. 1 Mega Pascal

ANALYTICAL RESULTS

Component	Requested Concentration	Actual Concentration	Protocol Method	Total Relative Uncertainty
NITRIC OXIDE	485.0 PPM	482.1 PPM	G1	+/- 1% NIST Traceable
NITROGEN	Balance			
Total oxides of nitrogen		482.4 PPM		For Reference Only

CALIBRATION STANDARDS

Type	Lot ID	Cylinder No	Concentration	Expiration Date
NTRM	060603	CC207616	490PPM NITRIC OXIDE/NITROGEN	Jan 01, 2010

ANALYTICAL EQUIPMENT

Instrument/Make/Model	Analytical Principle	Last Multipoint Calibration
Nicolet 6700 NO	FTIR	Jun 22, 2009

Triad Data Available Upon Request

Notes:ANW Part # 780782

QA Approval

Airgas

Airgas
630 United Drive
Durham, NC 27713
(919) 544-3772
Fax (919) 544-6297
www.airgas.com

CERTIFICATE OF ANALYSIS
Grade of Product: EPA Protocol

Part Number:	E02NI99E15A0223	Reference Number:	122-124178453-1
Cylinder Number:	SG9113307BAL	Cylinder Volume:	144 Cu.Ft.
Laboratory:	ASG - Durham - NC	Cylinder Pressure:	2015 PSIG
Analysis Date:	May 29, 2009	Valve Outlet:	660

Expiration Date: May 29, 2012

Certification performed in accordance with "EPA Traceability Protocol (Sept. 1997)" using the assay procedures listed. Analytical Methodology does not require correction for analytical interferences. This cylinder has a total analytical uncertainty as stated below with a confidence level of 95%. There are no significant impurities which affect the use of this calibration mixture. All concentrations are on a volume/volume basis unless otherwise noted.
Do Not Use This Cylinder below 150 psig.i.e. 1 Mega Pascal

ANALYTICAL RESULTS

Component	Requested Concentration	Actual Concentration	Protocol Method	Total Relative Uncertainty
CARBON MONOXIDE	45.00 PPM	45.070 PPM	G1	+/- 1% NIST Traceable
NITROGEN	Balance			

CALIBRATION STANDARDS

Type	Lot ID	Cylinder No	Concentration	Expiration Date
NTRM	080602	CC255630	51.26PPM CARBON MONOXIDE/NITROGEN	Jan 15, 2012

ANALYTICAL EQUIPMENT

Instrument/Make/Model	Analytical Principle	Last Multipoint Calibration
Nicolet 6700 CO	FTIR	May 26, 2009

Triad Data Available Upon Request

Notes:ANW PART #780481

QA Approval

222

#5000/AD

Airgas

Airgas
630 United Drive
Durham, NC 27713
(919) 544-3772
Fax (919) 544-6297
www.airgas.com

CERTIFICATE OF ANALYSIS
Grade of Product: EPA Protocol

Part Number:	E02NI99E33AC2S2	Reference Number:	122-124173837-7
Cylinder Number:	FF43261	Cylinder Volume:	28 Cu.Ft.
Laboratory:	ASG - Durham - NC	Cylinder Pressure:	1984 PSIG
Analysis Date:	Apr 22, 2009	Valve Outlet:	660

Expiration Date: Apr 22, 2012

Certification performed in accordance with "EPA Traceability Protocol (Sept. 1997)" using the assay procedures listed. Analytical Methodology does not require correction for analytical interferences. This cylinder has a total analytical uncertainty as stated below with a confidence level of 95%. There are no significant impurities which affect the use of this calibration mixture. All concentrations are on a volume/volume basis unless otherwise noted.
Do Not Use This Cylinder below 150 psig.i.e. 1 Mega Pascal

ANALYTICAL RESULTS

Component	Requested Concentration	Actual Concentration	Protocol Method	Total Relative Uncertainty
CARBON MONOXIDE	92.50 PPM	89.29 PPM	G1	+/- 1% NIST Traceable
NITROGEN	Balance			

CALIBRATION STANDARDS

Type	Lot ID	Cylinder No	Concentration	Expiration Date
NTRM	01520401	CC179908	99.49PPM CARBON MONOXIDE/NITROGEN	Feb 02, 2013
NTRM	05120413	CC180365	99.49PPM CARBON MONOXIDE/NITROGEN	Feb 02, 2013

ANALYTICAL EQUIPMENT

Instrument/Make/Model	Analytical Principle	Last Multipoint Calibration
Nicolet 6700 CO	FTIR	Mar 24, 2009

Triad Data Available Upon Request

Notes:ANW Part # 780482

QA Approval

METHOD 5 DRY GAS METER CALIBRATION USING CRITICAL ORIFICES

METER CONSOLE #: T2
DGM SERIAL #: 9739317

DATE: 06/29/09 CRITICAL ORIFICE SET SERIAL #: 1345

BAROMETRIC PRESSURE (in Hg):	INITIAL	FINAL	AVG (P_{bar})
	29	29	29

ORIFICE #	RUN #	K' FACTOR (AVG)	TESTED VACUUM (in Hg)	DGM READINGS (FT^3) INITIAL	FINAL	NET (V_m)	TEMPERATURES °F AMBIENT	DGM INLET INITIAL	DGM INLET FINAL	DGM OUTLET INITIAL	DGM OUTLET FINAL	DGM AVG	ELAPSED TIME (MIN) θ	DGM ΔH (in H_2O)	(1) V_m (STD)	(2) V_{cr} (STD)	(3) Y	Y CHECK < 0.02 VAR.	$\Delta H_@$	ΔH CHECK < 0.2 VAR.
23	1	0.6385	17	235.000	240.160	5.160	84	86	85	82	83	84.0	6.00	2.050	4.880	4.765	0.9763	OK	1.73	OK
23	2	0.6385	17	240.160	245.320	5.160	84	85	86	83	83	84.3	6.00	2.050	4.878	4.765	0.9768	OK	1.73	OK
23	3	0.6385	17	245.320	250.459	5.139	84	86	86	83	84	84.8	6.00	2.050	4.854	4.765	0.9817	OK	1.73	OK
															AVERAGES =>		0.9782		1.7284	
18	1	0.4913	17	251.000	257.277	6.277	84	86	86	84	84	85.0	9.50	1.200	5.913	5.805	0.9817	OK	1.70	OK
18	2	0.4913	17	257.277	263.554	6.277	85	86	86	84	84	85.0	9.50	1.200	5.913	5.800	0.9808	OK	1.71	OK
18	3	0.4913	17	263.554	269.778	6.224	85	86	86	84	85	85.3	9.50	1.200	5.861	5.800	0.9896	OK	1.71	OK
															AVERAGES =>		0.9840		1.7049	
12	1	0.3080	19	271.500	276.816	5.316	86	86	87	85	86	86.0	13.00	0.420	4.989	4.971	0.9964	OK	1.52	OK
12	2	0.3080	19	276.816	282.110	5.294	87	87	87	86	86	86.5	13.00	0.420	4.964	4.966	1.0005	OK	1.52	OK
12	3	0.3080	19	282.110	287.392	5.282	87	87	88	86	86	86.8	13.00	0.420	4.950	4.966	1.0032	OK	1.52	OK
															AVERAGES =>		1.0000		1.5172	

ALL VOLUMES GREATER THAN 5 ACF?	OK

AVERAGE DRY GAS METER CALIBRATION FACTOR, Y = **0.9874**

AVERAGE $\Delta H_@$ = **1.650**

USING THE CRITICAL ORIFICES AS CALIBRATION STANDARDS:

The following equations are used to calculate the standard volumes of air passed through the DGM, V_m (std), and the critical orifice, V_{cr} (std), and the DGM calibration factor, Y. These equations are automatically calculated in the spreadsheet above.

(1) $V_m\,(std) = K_1\, V_m \dfrac{P_{bar} + (\Delta H/13.6)}{T_m}$ = Net volume of gas sample passed through DGM, corrected to standard conditions

K_1 = 17.64 °R/in. Hg (English), 0.3858 °K/mm Hg (Metric)

T_m = Absolute DGM avg. temperature (°R - English, °K - Metric)

$$\Delta H_@ = \left(\frac{0.75\,\theta}{V_{cr}(std)}\right)^2 \left(\frac{\Delta H\ V_m(std)}{V_m}\right)$$

(2) $V_{cr}\,(std) = K' \sqrt{\dfrac{P_{bar}\,\theta}{T_{amb}}}$ = Volume of gas sample passed through the critical orifice, corrected to standard conditions

T_{amb} = Absolute ambient temperature (°R - English, °K - Metric)

K' = Average K' factor from Critical Orifice Calibration

(3) $Y = \dfrac{V_{cr}\,(std)}{V_m\,(std)}$ = DGM calibration factor

ORIFICE CHECKS:	GAMMA	RESULT	STATUS
IF Y VARIATION EXCEEDS 2.00%,	GAMMA 1	-0.93	OK
RECALIBRATE ORIFICE	GAMMA 2	-0.35	OK
	GAMMA 3	1.28	OK

1) Select three critical orifices to calibrate the dry gas meter which bracket the expected operating range.
2) Record barometric pressure before and after calibration procedure.
3) Run at tested vacuum (from Orifice Calibration Report), for a period of time necessary to achieve a minimum total volume of 5 cubic feet.
4) Record readings below, shaded columns are automatically calculated.

224

METHOD 5 DRY GAS METER CALIBRATION USING CRITICAL ORIFICES

METER CONSOLE #: T5
DGM SERIAL #: 6840714

DATE: 06/29/09 CRITICAL ORIFICE SET SERIAL #: 1345

BAROMETRIC PRESSURE (in Hg): INITIAL 29, FINAL 29, AVG (P_{bar}) 29

ORIFICE #	RUN #	K' FACTOR (AVG)	TESTED VACUUM (in Hg)	DGM READINGS (FT^3) INITIAL	FINAL	NET (V_m)	TEMPERATURES °F AMBIENT	DGM INLET INITIAL	DGM INLET FINAL	DGM OUTLET INITIAL	DGM OUTLET FINAL	DGM AVG	ELAPSED TIME (MIN) θ	DGM ΔH (in H_2O)	(1) V_m (STD)	(2) V_{cr} (STD)	(3) Y	Y CHECK < 0.02 VAR.	$\Delta H_@$	ΔH CHECK < 0.2 VAR.
12	1	0.3080	18	385.000	390.131	5.131	90	89	86	84	84	85.8	12.50	0.450	4.818	4.762	0.9884	OK	1.64	OK
12	2	0.3080	18	390.131	395.261	5.130	90	86	86	84	85	85.3	12.50	0.450	4.821	4.762	0.9877	OK	1.64	OK
12	3	0.3080	18	395.261	400.390	5.129	90	86	86	85	85	85.5	12.50	0.450	4.818	4.762	0.9884	OK	1.64	OK
															AVERAGES =>		0.9882		1.6383	
23	1	0.6385	16	401.000	406.623	5.623	90	86	87	85	85	85.8	6.50	2.200	5.303	5.133	0.9680	OK	1.87	OK
23	2	0.6385	16	406.623	412.238	5.615	90	87	87	85	85	86.0	6.50	2.200	5.293	5.133	0.9698	OK	1.87	OK
23	3	0.6385	16	412.238	417.858	5.620	90	87	86	85	85	85.8	6.50	2.200	5.300	5.133	0.9685	OK	1.87	OK
															AVERAGES =>		0.9688		1.8709	
18	1	0.4913	18	418.500	423.810	5.310	90	86	85	85	85	85.3	8.00	1.300	5.001	4.862	0.9721	OK	1.86	OK
18	2	0.4913	18	423.810	429.102	5.292	89	85	85	85	85	85.0	8.00	1.300	4.987	4.866	0.9758	OK	1.86	OK
18	3	0.4913	18	429.102	434.399	5.297	89	85	85	85	85	85.0	8.00	1.300	4.991	4.866	0.9749	OK	1.86	OK
															AVERAGES =>		0.9743		1.8633	

ALL VOLUMES GREATER THAN 5 ACF?	OK

AVERAGE DRY GAS METER CALIBRATION FACTOR, Y = **0.9771**

AVERAGE $\Delta H_@$ = **1.791**

USING THE CRITICAL ORIFICES AS CALIBRATION STANDARDS:

The following equations are used to calculate the standard volumes of air passed through the DGM, V_m (std), and the critical orifice, V_{cr} (std), and the DGM calibration factor, Y. These equations are automatically calculated in the spreadsheet above.

(1) $V_m\,(std) = K_1\, V_m \dfrac{P_{bar} + (\Delta H/13.6)}{T_m}$ = Net volume of gas sample passed through DGM, corrected to standard conditions

K_1 = 17.64 °R/in. Hg (English), 0.3858 °K/mm Hg (Metric)

T_m = Absolute DGM avg. temperature (°R - English, °K - Metric)

(2) $V_{cr}\,(std) = K' \sqrt{\dfrac{P_{bar}\,\theta}{T_{amb}}}$ = Volume of gas sample passed through the critical orifice, corrected to standard conditions

T_{amb} = Absolute ambient temperature (°R - English, °K - Metric)

K' = Average K' factor from Critical Orifice Calibration

(3) $Y = \dfrac{V_{cr}\,(std)}{V_m\,(std)}$ = DGM calibration factor

$$\Delta H_@ = \left(\frac{0.75\,\theta}{V_{cr}(std)}\right)^2 \left(\frac{\Delta H\ V_m(std)}{V_m}\right)$$

ORIFICE CHECKS:	GAMMA	RESULT	STATUS
IF Y VARIATION EXCEEDS 2.00%,	GAMMA 1	1.14	OK
RECALIBRATE ORIFICE	GAMMA 2	-0.85	OK
	GAMMA 3	-0.29	OK

1) Select three critical orifices to calibrate the dry gas meter which bracket the expected operating range.
2) Record barometric pressure before and after calibration procedure.
3) Run at tested vacuum (from Orifice Calibration Report), for a period of time necessary to achieve a minimum total volume of 5 cubic feet.
4) Record readings below, shaded columns are automatically calculated.

METHOD 5 DRY GAS METER CALIBRATION USING CRITICAL ORIFICES

METER CONSOLE #: T7
DGM SERIAL #: 8822305

DATE: 06/30/09 CRITICAL ORIFICE SET SERIAL #: 1345 BAROMETRIC PRESSURE (in Hg): INITIAL 29 FINAL 29 AVG (P_{bar}) 29

ORIFICE #	RUN #	K' FACTOR (AVG)	TESTED VACUUM (in Hg)	DGM READINGS (FT^3) INITIAL	FINAL	NET (V_m)	TEMPERATURES °F AMBIENT	DGM INLET INITIAL	DGM INLET FINAL	DGM OUTLET INITIAL	DGM OUTLET FINAL	DGM AVG	ELAPSED TIME (MIN) θ	DGM ΔH (in H_2O)	(1) V_m (STD)	(2) V_{cr} (STD)	(3) Y	Y CHECK < 0.02 VAR.	$\Delta H_@$	ΔH CHECK < 0.2 VAR.
23	1	0.6385	16	695.500	700.552	5.052	80	84	84	81	81	82.5	6.00	2.100	4.792	4.782	0.9980	OK	1.76	OK
23	2	0.6385	16	700.552	705.598	5.046	80	84	84	81	82	82.8	6.00	2.100	4.784	4.782	0.9996	OK	1.76	OK
23	3	0.6385	16	705.598	710.629	5.031	81	84	84	82	82	83.0	6.00	2.100	4.768	4.778	1.0021	OK	1.77	OK
															AVERAGES =>		0.9999		1.7640	
12	1	0.3080	18	711.000	716.044	5.044	82	83	85	82	83	83.3	12.50	0.440	4.758	4.797	1.0083	OK	1.59	OK
12	2	0.3080	18	716.044	721.096	5.052	82	85	86	83	84	84.5	12.50	0.440	4.754	4.797	1.0090	OK	1.58	OK
12	3	0.3080	18	721.096	726.132	5.036	84	86	87	84	84	85.3	12.50	0.440	4.733	4.788	1.0117	OK	1.59	OK
															AVERAGES =>		1.0097		1.5839	
18	1	0.4913	18	727.000	732.223	5.223	84	87	88	85	85	86.3	8.00	1.150	4.908	4.888	0.9959	OK	1.63	OK
18	2	0.4913	18	732.223	737.432	5.209	85	88	89	85	86	87.0	8.00	1.150	4.888	4.884	0.9990	OK	1.63	OK
18	3	0.4913	18	737.432	742.639	5.207	85	89	89	86	86	87.5	8.00	1.150	4.882	4.884	1.0003	OK	1.63	OK
															AVERAGES =>		0.9984		1.6282	

ALL VOLUMES GREATER THAN 5 ACF?	OK

AVERAGE DRY GAS METER CALIBRATION FACTOR, Y = **1.0027**

AVERAGE $\Delta H_@$ = **1.659**

USING THE CRITICAL ORIFICES AS CALIBRATION STANDARDS:

The following equations are used to calculate the standard volumes of air passed through the DGM, V_m (std), and the critical orifice, V_{cr} (std), and the DGM calibration factor, Y. These equations are automatically calculated in the spreadsheet above.

(1) $V_m\,(std) = K_1\, V_m \dfrac{P_{bar} + (\Delta H/13.6)}{T_m}$ = Net volume of gas sample passed through DGM, corrected to standard conditions

K_1 = 17.64 °R/in. Hg (English), 0.3858 °K/mm Hg (Metric)

T_m = Absolute DGM avg. temperature (°R - English, °K - Metric)

(2) $V_{cr}\,(std) = K' \sqrt{\dfrac{P_{bar}\,\theta}{T_{amb}}}$ = Volume of gas sample passed through the critical orifice, corrected to standard conditions

T_{amb} = Absolute ambient temperature (°R - English, °K - Metric)

K' = Average K' factor from Critical Orifice Calibration

(3) $Y = \dfrac{V_{cr}\,(std)}{V_m\,(std)}$ = DGM calibration factor

$$\Delta H_@ = \left(\frac{0.75\,\theta}{V_{cr}(std)}\right)^2 \left(\frac{\Delta H\ V_m(std)}{V_m}\right)$$

ORIFICE CHECKS:	GAMMA	RESULT	STATUS
IF Y VARIATION EXCEEDS 2.00%,	GAMMA 1	-0.27	OK
RECALIBRATE ORIFICE	GAMMA 2	0.70	OK
	GAMMA 3	-0.42	OK

1) Select three critical orifices to calibrate the dry gas meter which bracket the expected operating range.
2) Record barometric pressure before and after calibration procedure.
3) Run at tested vacuum (from Orifice Calibration Report), for a period of time necessary to achieve a minimum total volume of 5 cubic feet.
4) Record readings below, shaded columns are automatically calculated.

ONSITE METHOD 5 DRY GAS METER AUDIT AND POSTTEST CALIBRATION USING CRITICAL ORIFICE

Client Name	Covanta Projects, Inc.
Plant Name	Huntington Resource Recovery Facility
Plant City, State	East Northport, NY
Test Location	Units 1, 2, & 3 FF Outlets
Project Number	10639
Date of Pre-Test	08/03/09
Date of Post-Test	
Tester Signature	

Meterbox ID	T2	
Meter Y	0.9874	
Meter Delta Ha	1.650	
Reference Pressure	29.6	STATUS
Barometric Pressure	29.6	PASS
Pbar Pretest	29.6	
Pbar Posttest		

ORIFICE ID# INCLUDING SET-#	RUN #	K' FACTOR (AVG)	TESTED VACUUM (in Hg)	DGM READINGS (FT^3) INITIAL	DGM READINGS (FT^3) FINAL	TEMPERATURES °F AMB	DGM INLET INIT	DGM INLET FINAL	DGM OUTLET INIT	DGM OUTLET FINAL	DGM AVG	ELAPSED TIME (MIN) θ	DGM ΔH (in H_2O)	(1) V_m (STD)	(2) V_{cr} (STD)	(3) Y	Y VARIATION (%)	QA STATUS
PRETEST ONSITE 10 MINUTE AUDIT						PRE												
NA	1	NA	NA	9.000	16.642	NA	89	92	93	91	91.25	10.00	1.65	7.2682	NA	1.0086	2.15	PASS
POSTTEST CHECK		AVERAGE DELTA H =				POST												
	1	#N/A									0			0.0	#N/A	#N/A		
0	2	#N/A	0	0.000		0	0		0		0		0.00	0.0	#N/A	#N/A		
0	3	#N/A	0	0.000		0	0		0		0		0.00	0.0	#N/A	#N/A		
															AVG =	#N/A	#N/A	#N/A

FINAL - INITIAL VOLUMES > 5 CUBIC FEET? FAIL

PRETEST PROCEDURES:

1) Record barometric pressure and temperatures before calibration.
2) Run 10 minute audit at Delta Ha without an orifice.
3) Record ambient temperature and compare all thermocouple readings.
4) Record thermocouple IDs and readings in table.

POSTTEST PROCEDURES:

1) Record barometric pressure before calibration.
2) Select one critical orifice to calibrate the dry gas meter which best approximates the operating range. Compare the average Delta H from your results page with the Delta H in the orifice table. Input orifice number.
3) Run at 18" Hg vacuum for a period of time necessary to achieve a minimum total volume of 5 cubic feet.
4) Perform three repititions for the posttest, record readings, shaded columns are automatically calculated.
5) Compare thermocouples to ambient and record as posttest calibration check.

ONSITE METHOD 5 DRY GAS METER AUDIT AND POSTTEST CALIBRATION USING CRITICAL ORIFICE

Client Name	Covanta Projects, Inc.
Plant Name	Huntington Resource Recovery Facility
Plant City, State	East Northport, NY
Test Location	Units 1, 2, & 3 FF Outlets
Project Number	10639
Date of Pre-Test	08/03/09
Date of Post-Test	
Tester Signature	

Meterbox ID	T5	
Meter Y	0.9771	
Meter Delta Ha	1.791	
Reference Pressure	29.6	STATUS
Barometric Pressure	29.6	PASS
Pbar Pretest	29.6	
Pbar Posttest		

ORIFICE ID# INCLUDING SET-#	RUN #	K' FACTOR (AVG)	TESTED VACUUM (in Hg)	DGM READINGS (FT^3) INITIAL	DGM READINGS (FT^3) FINAL	TEMPERATURES °F AMB	DGM INLET INIT	DGM INLET FINAL	DGM OUTLET INIT	DGM OUTLET FINAL	DGM AVG	ELAPSED TIME (MIN) θ	DGM ΔH (in H_2O)	(1) V_m (STD)	(2) V_{cr} (STD)	(3) Y	Y VARIATION (%)	QA STATUS
PRETEST ONSITE 10 MINUTE AUDIT						PRE												
NA	1	NA	NA	438.000	445.665	NA	77	78	78	78	77.75	10.00	1.79	7.4757	NA	0.9932	1.65	PASS
POSTTEST CHECK		AVERAGE DELTA H =				POST												
	1	#N/A									0			0.0	#N/A	#N/A		
0	2	#N/A	0	0.000		0	0		0		0		0.00	0.0	#N/A	#N/A		
0	3	#N/A	0	0.000		0	0		0		0		0.00	0.0	#N/A	#N/A		
															AVG =	#N/A	#N/A	#N/A

FINAL - INITIAL VOLUMES > 5 CUBIC FEET? FAIL

PRETEST PROCEDURES:

1) Record barometric pressure and temperatures before calibration.
2) Run 10 minute audit at Delta Ha without an orifice.
3) Record ambient temperature and compare all thermocouple readings.
4) Record thermocouple IDs and readings in table.

POSTTEST PROCEDURES:

1) Record barometric pressure before calibration.
2) Select one critical orifice to calibrate the dry gas meter which best approximates the operating range. Compare the average Delta H from your results page with the Delta H in the orifice table. Input orifice number.
3) Run at 18" Hg vacuum for a period of time necessary to achieve a minimum total volume of 5 cubic feet.
4) Perform three repititions for the posttest, record readings, shaded columns are automatically calculated.
5) Compare thermocouples to ambient and record as posttest calibration check.

ONSITE METHOD 5 DRY GAS METER AUDIT AND POSTTEST CALIBRATION USING CRITICAL ORIFICE

Client Name	Covanta Projects, Inc.
Plant Name	Huntington Resource Recovery Facility
Plant City, State	East Northport, NY
Test Location	Units 1, 2, & 3 FF Outlets
Project Number	10639
Date of Pre-Test	08/03/09
Date of Post-Test	
Tester Signature	

Meterbox ID	T7	
Meter Y	1.0027	
Meter Delta Ha	1.659	
Reference Pressure	29.6	STATUS
Barometric Pressure	29.6	PASS
Pbar Pretest	29.6	
Pbar Posttest		

ORIFICE ID# INCLUDING SET-#	RUN #	K' FACTOR (AVG)	TESTED VACUUM (in Hg)	DGM READINGS (FT^3) INITIAL	DGM READINGS (FT^3) FINAL	TEMPERATURES °F AMB	DGM INLET INIT	DGM INLET FINAL	DGM OUTLET INIT	DGM OUTLET FINAL	DGM AVG	ELAPSED TIME (MIN) θ	DGM ΔH (in H_2O)	(1) V_m (STD)	(2) V_{cr} (STD)	(3) Y	Y VARIATION (%)	QA STATUS
PRETEST ONSITE 10 MINUTE AUDIT						PRE												
NA	1	NA	NA	681.700	689.471	NA	86	85	88	87	86.5	10.00	1.66	7.4553	NA	0.9876	1.51	PASS
POSTTEST CHECK		AVERAGE DELTA H =				POST												
	1	#N/A									0			0.0	#N/A	#N/A		
0	2	#N/A	0	0.000		0	0		0		0		0.00	0.0	#N/A	#N/A		
0	3	#N/A	0	0.000		0	0		0		0		0.00	0.0	#N/A	#N/A		
															AVG =	#N/A	#N/A	#N/A

FINAL - INITIAL VOLUMES > 5 CUBIC FEET? FAIL

PRETEST PROCEDURES:

1) Record barometric pressure and temperatures before calibration.
2) Run 10 minute audit at Delta Ha without an orifice.
3) Record ambient temperature and compare all thermocouple readings.
4) Record thermocouple IDs and readings in table.

POSTTEST PROCEDURES:

1) Record barometric pressure before calibration.
2) Select one critical orifice to calibrate the dry gas meter which best approximates the operating range. Compare the average Delta H from your results page with the Delta H in the orifice table. Input orifice number.
3) Run at 18" Hg vacuum for a period of time necessary to achieve a minimum total volume of 5 cubic feet.
4) Perform three repititions for the posttest, record readings, shaded columns are automatically calculated.
5) Compare thermocouples to ambient and record as posttest calibration check.

GLASS NOZZLE CALIBRATION DATA, INCHES

07/22/09

CAL. DATE	NOZZLE ID NUMBER	AVG. DIAM.	DIA. 1	DIA. 2	DIA. 3	HIGH	LOW	QA/QC CHECK
04/10/98	GN100	0.114	0.113	0.115	0.114	0.115	0.113	OK
04/10/98	GN104	0.377	0.377	0.377	0.378	0.378	0.377	OK
04/10/98	GN105	0.389	0.388	0.389	0.389	0.389	0.388	OK
04/10/98	GN111	0.380	0.380	0.381	0.378	0.381	0.378	OK
04/10/98	GN112	0.393	0.392	0.393	0.395	0.395	0.392	OK
04/10/98	GN114	0.115	0.115	0.115	0.116	0.116	0.115	OK
04/10/98	GN118	0.378	0.378	0.378	0.377	0.378	0.377	OK
04/10/98	GN119	0.394	0.394	0.394	0.394	0.394	0.394	OK
04/11/98	GN127	0.497	0.497	0.497	0.498	0.498	0.497	OK
05/25/05	GN252	0.274	0.274	0.274	0.273	0.274	0.273	OK
01/06/00	GN290	0.311	0.310	0.311	0.312	0.312	0.310	OK
10/24/05	GN341	0.308	0.308	0.308	0.309	0.309	0.308	OK
10/24/05	GN344	0.310	0.310	0.311	0.310	0.311	0.310	OK
10/24/05	GN346	0.312	0.311	0.311	0.313	0.313	0.311	OK
10/24/05	GN348	0.310	0.310	0.310	0.311	0.311	0.310	OK
10/24/05	GN350	0.336	0.336	0.336	0.336	0.336	0.336	OK
10/24/05	GN355	0.336	0.336	0.336	0.337	0.337	0.336	OK
09/11/00	GN358	0.339	0.339	0.339	0.340	0.340	0.339	OK
01/06/06	GN387	0.192	0.192	0.192	0.192	0.192	0.192	OK
04/09/06	GN438	0.195	0.194	0.195	0.195	0.195	0.194	OK
04/09/06	GN441	0.193	0.193	0.193	0.193	0.193	0.193	OK
09/18/01	GN462	0.160	0.159	0.160	0.161	0.161	0.159	OK
07/10/06	GN466	0.258	0.258	0.258	0.259	0.259	0.258	OK
07/21/06	GN480	0.497	0.498	0.498	0.496	0.498	0.496	OK
07/21/06	GN481	0.496	0.495	0.496	0.496	0.496	0.495	OK
04/12/07	GN529	0.193	0.193	0.192	0.193	0.193	0.192	OK
04/12/07	GN530	0.194	0.193	0.194	0.194	0.194	0.193	OK
04/12/07	GN540	0.260	0.260	0.260	0.261	0.261	0.260	OK
04/12/07	GN545	0.279	0.280	0.279	0.279	0.280	0.279	OK
05/10/07	GN550	0.260	0.260	0.260	0.261	0.261	0.260	OK
05/10/07	GN555	0.269	0.269	0.268	0.269	0.269	0.268	OK
05/14/07	GN556	0.257	0.258	0.257	0.257	0.258	0.257	OK
05/14/07	GN560	0.257	0.258	0.257	0.257	0.258	0.257	OK
05/14/07	GN566	0.261	0.261	0.262	0.261	0.262	0.261	OK
08/20/07	GN583	0.214	0.214	0.215	0.214	0.215	0.214	OK
08/20/07	GN589	0.216	0.216	0.215	0.216	0.216	0.215	OK
08/20/07	GN594	0.216	0.216	0.215	0.216	0.216	0.215	OK
09/30/07	GN595	0.193	0.194	0.194	0.192	0.194	0.192	OK
09/30/07	GN596	0.192	0.192	0.193	0.192	0.193	0.192	OK
09/30/07	GN597A	0.194	0.194	0.195	0.194	0.195	0.194	OK
05/03/02	GN601	0.340	0.340	0.340	0.341	0.341	0.340	OK
09/30/07	GN606	0.280	0.280	0.281	0.280	0.281	0.280	OK
09/30/07	GN607	0.280	0.280	0.280	0.280	0.280	0.280	OK
09/30/07	GN608	0.280	0.280	0.279	0.282	0.282	0.279	OK
01/22/08	GN610	0.216	0.216	0.217	0.216	0.217	0.216	OK
01/22/08	GN612	0.217	0.217	0.217	0.217	0.217	0.217	OK
01/22/08	GN613	0.216	0.215	0.217	0.217	0.217	0.215	OK
01/22/08	GN621	0.269	0.268	0.269	0.270	0.270	0.268	OK
07/20/02	GN629	0.388	0.388	0.388	0.388	0.388	0.388	OK
01/22/08	GN631	0.262	0.262	0.262	0.262	0.262	0.262	OK
07/20/02	GN633	0.376	0.376	0.377	0.376	0.377	0.376	OK
07/20/02	GN635	0.388	0.389	0.388	0.388	0.389	0.388	OK
01/22/08	GN636	0.261	0.261	0.261	0.262	0.262	0.261	OK

03/09/08	GN637	0.192	0.192	0.193	0.192	0.193	0.192	OK
03/09/08	GN640	0.194	0.193	0.194	0.194	0.194	0.193	OK
03/09/08	GN645	0.194	0.194	0.194	0.193	0.194	0.193	OK
03/14/08	GN655	0.261	0.260	0.262	0.260	0.262	0.260	OK
03/31/08	GN662	0.206	0.206	0.206	0.206	0.206	0.206	OK
03/31/08	GN665	0.207	0.207	0.207	0.207	0.207	0.207	OK
04/14/08	GN688	0.278	0.278	0.277	0.278	0.278	0.277	OK
04/14/08	GN692	0.278	0.277	0.278	0.278	0.278	0.277	OK
05/13/08	GN701	0.256	0.256	0.255	0.256	0.256	0.255	OK
05/13/08	GN702	0.256	0.256	0.256	0.256	0.256	0.256	OK
06/03/08	GN708	0.213	0.213	0.213	0.212	0.213	0.212	OK
06/03/08	GN712	0.213	0.213	0.213	0.213	0.213	0.213	OK
06/03/08	GN714	0.215	0.215	0.215	0.215	0.215	0.215	OK
06/03/08	GN716	0.211	0.212	0.210	0.211	0.212	0.210	OK
06/03/08	GN722	0.193	0.194	0.194	0.192	0.194	0.192	OK
06/03/08	GN726	0.193	0.193	0.194	0.193	0.194	0.193	OK
06/16/08	GN730	0.257	0.257	0.256	0.257	0.257	0.256	OK
06/16/08	GN731	0.255	0.254	0.255	0.255	0.255	0.254	OK
06/16/08	GN732	0.258	0.257	0.258	0.258	0.258	0.257	OK
06/16/08	GN733	0.258	0.258	0.257	0.258	0.258	0.257	OK
06/16/08	GN738	0.257	0.256	0.257	0.257	0.257	0.256	OK
03/12/03	GN757	0.155	0.155	0.156	0.155	0.156	0.155	OK
10/02/08	GN759	0.195	0.195	0.194	0.195	0.195	0.194	OK
10/02/08	GN762	0.195	0.195	0.196	0.195	0.196	0.195	OK
10/02/08	GN764	0.195	0.195	0.196	0.194	0.196	0.194	OK
10/02/08	GN768	0.195	0.195	0.195	0.196	0.196	0.195	OK
10/22/08	GN770	0.276	0.277	0.276	0.276	0.277	0.276	OK
10/22/08	GN772	0.278	0.277	0.278	0.278	0.278	0.277	OK
10/22/08	GN773	0.278	0.278	0.278	0.277	0.278	0.277	OK
10/23/08	GN780	0.260	0.260	0.260	0.259	0.260	0.259	OK
10/23/08	GN783	0.215	0.215	0.215	0.215	0.215	0.215	OK
10/23/08	GN788	0.215	0.215	0.216	0.215	0.216	0.215	OK
10/23/08	GN790	0.214	0.214	0.215	0.214	0.215	0.214	OK
11/04/08	GN794	0.218	0.217	0.218	0.218	0.218	0.217	OK
11/04/08	GN799	0.215	0.215	0.215	0.215	0.215	0.215	OK
11/04/08	GN800	0.216	0.215	0.216	0.216	0.216	0.215	OK
11/04/08	GN802	0.216	0.216	0.216	0.217	0.217	0.216	OK
11/12/08	GN804	0.195	0.195	0.195	0.195	0.195	0.195	OK
11/12/08	GN805	0.195	0.196	0.195	0.195	0.196	0.195	OK
11/12/08	GN806	0.195	0.195	0.195	0.194	0.195	0.194	OK
11/12/08	GN807	0.195	0.195	0.195	0.196	0.196	0.195	OK
11/12/08	GN809	0.195	0.195	0.195	0.195	0.195	0.195	OK
11/12/08	GN813	0.195	0.195	0.196	0.195	0.196	0.195	OK
11/12/08	GN814	0.195	0.194	0.195	0.195	0.195	0.194	OK
11/12/08	GN815	0.195	0.195	0.196	0.195	0.196	0.195	OK
02/17/09	GN816	0.259	0.259	0.260	0.259	0.260	0.259	OK
02/17/09	GN821	0.258	0.258	0.257	0.259	0.259	0.257	OK
02/17/09	GN822	0.259	0.259	0.259	0.259	0.259	0.259	OK
02/17/09	GN826	0.260	0.260	0.260	0.261	0.261	0.260	OK
02/17/09	GN827	0.258	0.257	0.258	0.258	0.258	0.257	OK
04/20/09	GN828	0.275	0.275	0.276	0.275	0.276	0.275	OK
04/20/09	GN829	0.275	0.275	0.275	0.275	0.275	0.275	OK
04/15/09	GN829A	0.217	0.217	0.217	0.217	0.217	0.217	OK
04/20/09	GN830	0.275	0.276	0.275	0.274	0.276	0.274	OK
04/15/09	GN830A	0.215	0.215	0.215	0.215	0.215	0.215	OK
04/20/09	GN831	0.271	0.271	0.270	0.271	0.271	0.270	OK
04/15/09	GN831A	0.217	0.217	0.216	0.217	0.217	0.216	OK
04/20/09	GN832	0.271	0.272	0.270	0.271	0.272	0.270	OK

04/15/09	GN832A	0.215	0.216	0.215	0.215	0.216	0.215	OK
04/20/09	GN833	0.277	0.277	0.276	0.278	0.278	0.276	OK
04/15/09	GN833A	0.216	0.216	0.216	0.216	0.216	0.216	OK
04/20/09	GN834	0.278	0.277	0.278	0.278	0.278	0.277	OK
04/15/09	GN834A	0.217	0.217	0.217	0.217	0.217	0.217	OK
04/20/09	GN835	0.278	0.277	0.278	0.279	0.279	0.277	OK
04/15/09	GN835A	0.215	0.215	0.215	0.215	0.215	0.215	OK
04/20/09	GN836	0.277	0.276	0.278	0.278	0.278	0.276	OK
04/15/09	GN836A	0.216	0.216	0.216	0.217	0.217	0.216	OK
04/20/09	GN837	0.280	0.280	0.280	0.281	0.281	0.280	OK
04/20/09	GN838	0.280	0.281	0.280	0.279	0.281	0.279	OK
04/15/09	GN838A	0.215	0.215	0.215	0.215	0.215	0.215	OK
04/20/09	GN839	0.280	0.279	0.280	0.280	0.280	0.279	OK
04/15/09	GN839A	0.216	0.215	0.216	0.216	0.216	0.215	OK
04/20/09	GN840A	0.215	0.215	0.215	0.216	0.216	0.215	OK
04/20/09	GN841	0.153	0.153	0.153	0.152	0.153	0.152	OK
04/20/09	GN842	0.154	0.154	0.154	0.154	0.154	0.154	OK
04/20/09	GN843	0.155	0.154	0.155	0.155	0.155	0.154	OK
04/20/09	GN844	0.155	0.155	0.153	0.156	0.156	0.153	OK
04/20/09	GN845	0.158	0.158	0.157	0.158	0.158	0.157	OK
04/20/09	GN846	0.158	0.157	0.158	0.158	0.158	0.157	OK
04/20/09	GN847	0.158	0.158	0.158	0.158	0.158	0.158	OK
04/23/09	GN848	0.195	0.195	0.195	0.195	0.195	0.195	OK
04/23/09	GN851	0.195	0.194	0.195	0.195	0.195	0.194	OK
04/23/09	GN852	0.195	0.195	0.195	0.195	0.195	0.195	OK
04/23/09	GN853	0.195	0.195	0.195	0.196	0.196	0.195	OK
04/23/09	GN854	0.195	0.195	0.195	0.196	0.196	0.195	OK
04/23/09	GN855	0.195	0.195	0.195	0.195	0.195	0.195	OK
04/23/09	GN857	0.195	0.195	0.195	0.195	0.195	0.195	OK
04/23/09	GN858	0.195	0.194	0.195	0.195	0.195	0.194	OK
04/23/09	GN859	0.195	0.195	0.196	0.195	0.196	0.195	OK
04/29/09	GN872	0.258	0.259	0.257	0.259	0.259	0.257	OK
04/29/09	GN873	0.258	0.257	0.259	0.258	0.259	0.257	OK
04/29/09	GN874	0.256	0.255	0.257	0.257	0.257	0.255	OK
04/29/09	GN875	0.258	0.258	0.258	0.258	0.258	0.258	OK
04/29/09	GN876	0.257	0.257	0.258	0.257	0.258	0.257	OK
04/29/09	GN877	0.259	0.259	0.260	0.258	0.260	0.258	OK
04/29/09	GN878	0.257	0.256	0.258	0.257	0.258	0.256	OK
04/29/09	GN879	0.258	0.258	0.258	0.259	0.259	0.258	OK
04/29/09	GN880	0.258	0.258	0.258	0.259	0.259	0.258	OK
04/29/09	GN881	0.258	0.258	0.258	0.258	0.258	0.258	OK
05/18/09	GN882	0.217	0.217	0.217	0.216	0.217	0.216	OK
05/18/09	GN883	0.214	0.214	0.214	0.215	0.215	0.214	OK
05/18/09	GN884	0.215	0.215	0.215	0.214	0.215	0.214	OK
05/18/09	GN885	0.216	0.216	0.216	0.216	0.216	0.216	OK
05/18/09	GN886	0.215	0.215	0.216	0.215	0.216	0.215	OK
05/18/09	GN887	0.217	0.216	0.217	0.217	0.217	0.216	OK
05/18/09	GN888	0.215	0.216	0.215	0.215	0.216	0.215	OK
05/18/09	GN889	0.215	0.216	0.215	0.215	0.216	0.215	OK
05/18/09	GN890	0.215	0.215	0.215	0.216	0.216	0.215	OK
05/18/09	GN891	0.214	0.215	0.214	0.214	0.215	0.214	OK
05/18/09	GN892	0.214	0.214	0.214	0.214	0.214	0.214	OK
05/18/09	GN893	0.215	0.215	0.215	0.214	0.215	0.214	OK
05/18/09	GN894	0.261	0.260	0.261	0.261	0.261	0.260	OK
05/18/09	GN895	0.259	0.259	0.258	0.259	0.259	0.258	OK
05/18/09	GN896	0.261	0.261	0.261	0.261	0.261	0.261	OK
05/18/09	GN897	0.259	0.259	0.259	0.259	0.259	0.259	OK
05/18/09	GN898	0.259	0.259	0.259	0.260	0.260	0.259	OK

05/18/09	GN899	0.260	0.259	0.260	0.260	0.260	0.259	OK
05/18/09	GN900	0.260	0.260	0.260	0.261	0.261	0.260	OK
05/18/09	GN901	0.258	0.258	0.257	0.258	0.258	0.257	OK
05/18/09	GN902	0.260	0.260	0.259	0.260	0.260	0.259	OK
05/18/09	GN903	0.260	0.260	0.261	0.260	0.261	0.260	OK
05/18/09	GN904	0.260	0.260	0.260	0.261	0.261	0.260	OK
05/18/09	GN905	0.259	0.259	0.259	0.260	0.260	0.259	OK
05/18/09	GN906	0.426	0.426	0.426	0.426	0.426	0.426	OK
05/18/09	GN907	0.425	0.425	0.426	0.425	0.426	0.425	OK
05/18/09	GN908	0.158	0.157	0.158	0.158	0.158	0.157	OK
05/18/09	GN909	0.157	0.156	0.157	0.157	0.157	0.156	OK
05/18/09	GN910	0.153	0.153	0.153	0.153	0.153	0.153	OK
05/18/09	GN911	0.155	0.154	0.155	0.155	0.155	0.154	OK
05/18/09	GN912	0.157	0.157	0.157	0.156	0.157	0.156	OK
05/18/09	GN913	0.156	0.156	0.155	0.156	0.156	0.155	OK
07/22/09	GN914	0.194	0.194	0.193	0.195	0.195	0.193	OK
07/22/09	GN915	0.215	0.216	0.215	0.215	0.216	0.215	OK
07/22/09	GN916	0.255	0.255	0.256	0.255	0.256	0.255	OK
07/22/09	GN917	0.258	0.258	0.257	0.259	0.259	0.257	OK
07/22/09	GN918	0.260	0.260	0.260	0.260	0.260	0.260	OK
07/22/09	GN919	0.260	0.260	0.260	0.261	0.261	0.260	OK
07/22/09	GN920	0.260	0.261	0.260	0.260	0.261	0.260	OK
07/22/09	GN921	0.335	0.335	0.336	0.335	0.336	0.335	OK
07/22/09	GN922	0.335	0.335	0.335	0.335	0.335	0.335	OK
07/22/09	GN923	0.338	0.337	0.338	0.338	0.338	0.337	OK
07/22/09	GN924	0.338	0.338	0.337	0.339	0.339	0.337	OK
07/22/09	GN925	0.338	0.338	0.338	0.337	0.338	0.337	OK
07/22/09	GN926	0.338	0.339	0.338	0.338	0.339	0.338	OK
07/22/09	GN927	0.340	0.340	0.341	0.339	0.341	0.339	OK
07/22/09	GN928	0.340	0.340	0.340	0.340	0.340	0.340	OK
07/22/09	GN929	0.340	0.341	0.340	0.340	0.341	0.340	OK
07/22/09	GN930	0.340	0.340	0.339	0.341	0.341	0.339	OK
07/22/09	GN931	0.340	0.342	0.340	0.339	0.342	0.339	OK
07/22/09	GN932	0.340	0.340	0.340	0.340	0.340	0.340	OK
07/14/04	GN985	0.300	0.300	0.299	0.300	0.300	0.299	OK
07/14/04	GN986	0.310	0.310	0.311	0.310	0.311	0.310	OK
07/14/04	GN996	0.302	0.303	0.302	0.302	0.303	0.302	OK

TEFLON COATED NOZZLE CALIBRATION DATA, INCHES

08/01/08

CAL DATE	NOZZLE ID NUMBER	AVG DIAM.	DIA. 1	DIA. 2	DIA. 3	HIGH	LOW	QA/QC CHECK
05/10/06	TN104	0.231	0.231	0.232	0.231	0.232	0.231	OK
05/10/06	TN107	0.242	0.242	0.242	0.243	0.243	0.242	OK
06/23/02	TN110	0.310	0.310	0.311	0.310	0.311	0.310	OK
05/10/06	TN119	0.281	0.281	0.281	0.281	0.281	0.281	OK
04/14/05	TN120	0.275	0.276	0.275	0.274	0.276	0.274	OK
05/10/06	TN123	0.246	0.245	0.245	0.247	0.247	0.245	OK
04/14/05	TN124	0.219	0.218	0.219	0.219	0.219	0.218	OK
04/14/05	TN126	0.310	0.309	0.310	0.311	0.311	0.309	OK
05/10/06	TN129	0.268	0.268	0.268	0.269	0.269	0.268	OK
01/12/06	TN130	0.268	0.266	0.269	0.268	0.269	0.266	OK
01/12/06	TN131	0.320	0.320	0.321	0.320	0.321	0.320	OK
01/12/06	TN132	0.327	0.325	0.328	0.328	0.328	0.325	OK
05/10/06	TN133	0.234	0.234	0.234	0.235	0.235	0.234	OK
05/10/06	TN134	0.235	0.235	0.236	0.235	0.236	0.235	OK
05/10/06	TN135	0.265	0.265	0.264	0.265	0.265	0.264	OK
05/10/06	TN137	0.366	0.365	0.366	0.366	0.366	0.365	OK
05/10/06	TN138	0.359	0.359	0.359	0.358	0.359	0.358	OK
07/21/06	TN139	0.492	0.491	0.493	0.491	0.493	0.491	OK
07/21/06	TN140	0.487	0.486	0.487	0.487	0.487	0.486	OK
07/21/06	TN141	0.432	0.432	0.432	0.431	0.432	0.431	OK
07/21/06	TN142	0.431	0.432	0.432	0.430	0.432	0.430	OK

#47

PM10-SS CYCLONE NOZZLE SET CALIBRATION

S/N: 20147

Calibration Performed By: Chris Dale

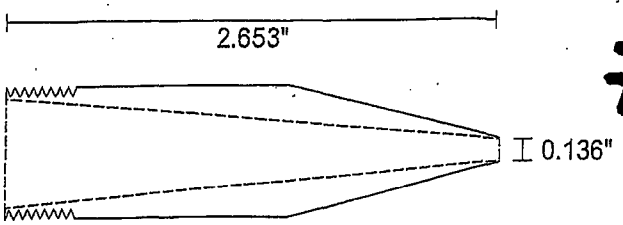

1 Actual: 0.135"

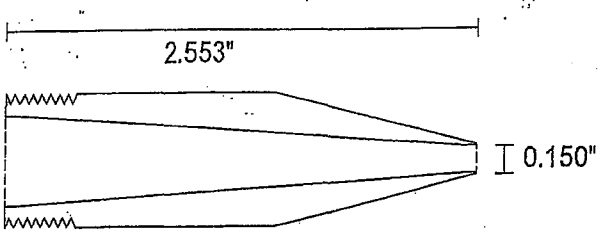

2 Actual: 0.150"

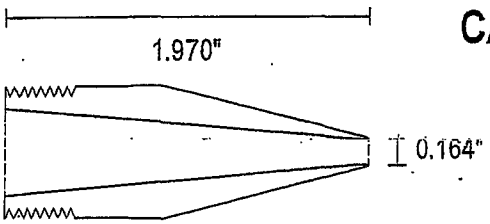

3 Actual: 0.164"

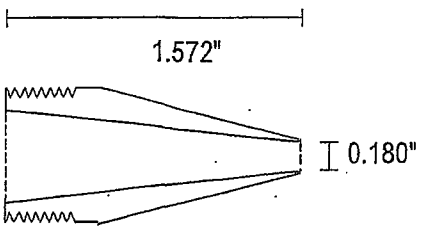

4 Actual: 0.181"

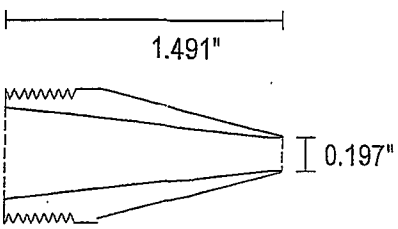

5 Actual: 0.196"

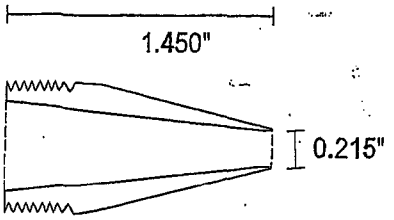

6 Actual: 0.215"

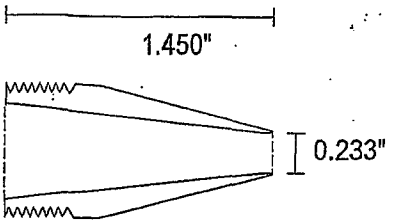

7 Actual: 0.233"

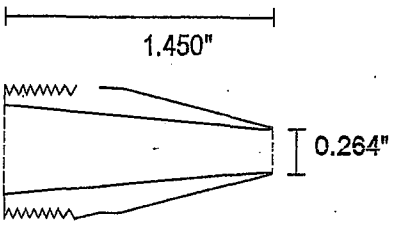

8 Actual: 0.263"

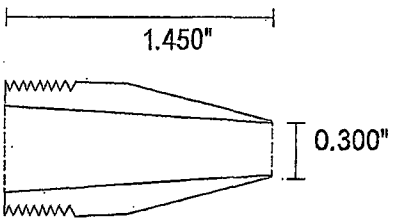

9 Actual: 0.300"

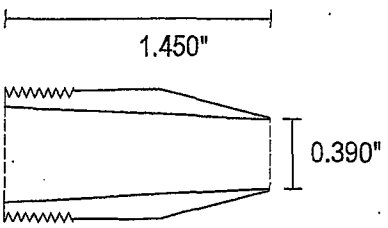

11 Actual: 0.390"

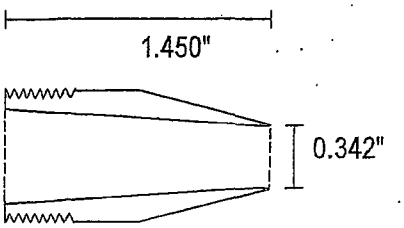

10 Actual: 0.343"

#63

PM10-SS CYCLONE NOZZLE SET CALIBRATION

S/N: 20163

Calibration Performed By:

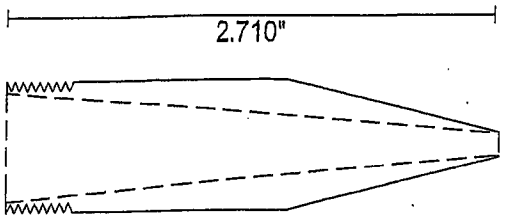

1 Actual: 0.125"

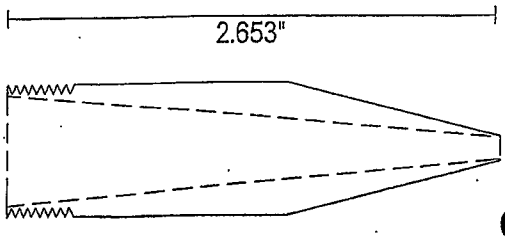

2 Actual: 0.136"

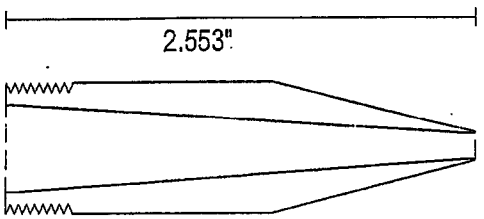

3 Actual: 0.156"

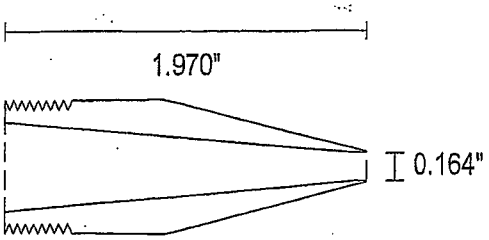

4 Actual: 0.168"

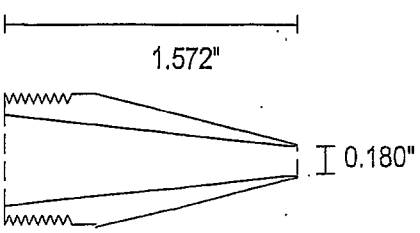

5 Actual: 0.178"

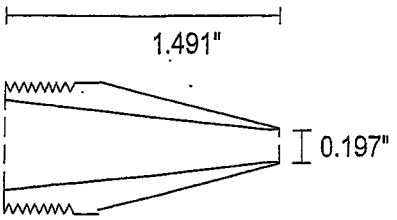

6 Actual: 0.195"

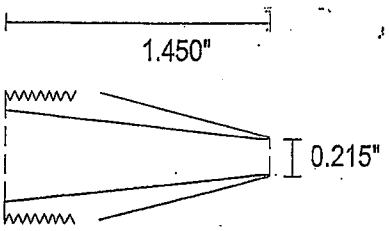

7 Actual: 0.215"

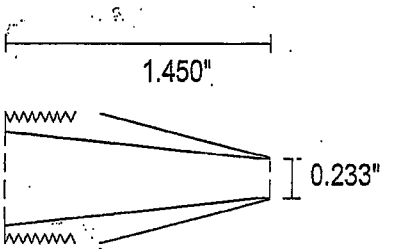

8 Actual: 0.231"

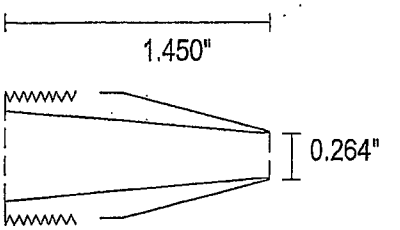

9 Actual: 0.268"

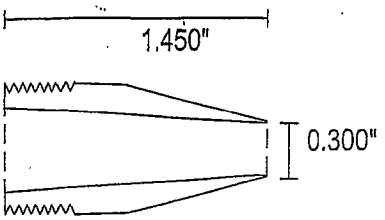

10 Actual: 0.303"

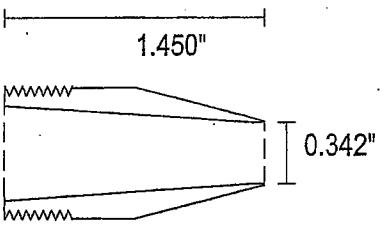

11 Actual: 0.347"

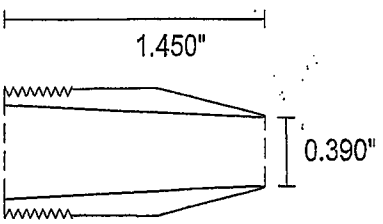

12 Actual: 0.389"

THERMOCOUPLE CALIBRATION DATA, °F

DATE	THERMOCOUPLE ID NUMBER	THERMOCOUPLE TEMPERATURE	REFERENCE TEMPERATURE	< or = 2 degrees F DIFFERENCE ??
Dry Gas Meters:				
	T1 IN	81	81	YES
	T1 OUT	81	81	YES
	T2 IN	77	77	YES
	T2 OUT	77	77	YES
	T3 IN	64	64	YES
	T3 OUT	64	64	YES
	T4 IN	77	77	YES
	T4 OUT	77	77	YES
	T5 IN	77	77	YES
	T5 OUT	77	77	YES
	T6 IN	86	86	YES
	T6 OUT	86	86	YES
	T7 IN	65	64	YES
	T7 OUT	65	64	YES
	T8 IN	65	64	YES
	T8 OUT	65	64	YES
	T9 IN	72	71	YES
	T9 OUT	71	71	YES
	TLF-1 IN	76	76	YES
	TLF-1 OUT	75	76	YES
	TLF-2 IN	64	64	YES
	TLF-2 OUT	64	64	YES

Thermocouples:				
	8	85	85	YES
	12	85	85	YES
	15	85	85	YES
	17	85	85	YES
	18	82	82	YES
	19	85	85	YES
	21	85	85	YES
	23	85	85	YES
	26	85	85	YES
	29	85	85	YES
	36	85	85	YES
	38	85	85	YES
	39	85	85	YES
	141	85	85	YES
	142	85	85	YES
	143	85	85	YES
	144	85	85	YES
	145	85	85	YES
	146	85	85	YES
	147	85	85	YES
	148	85	85	YES
	149	85	85	YES
	150	85	85	YES
	151	84	85	YES
	152	84	85	YES
	153	84	85	YES
	154	84	85	YES
	155	85	85	YES
	156	88	88	YES
	157	84	85	YES
	158	84	85	YES
	159	85	85	YES
	160	84	85	YES
	161	85	85	YES
	162	88	88	YES
	163	85	85	YES
	164	88	88	YES
	165	86	86	YES
	166	88	88	YES
	167	85	85	YES
	168	85	85	YES
	169	85	85	YES
	170	85	85	YES
	171	88	88	YES
	172	86	85	YES
	173	87	88	YES
	174	85	85	YES
	194	85	85	YES
	195	85	85	YES
	196	85	85	YES
	197	86	85	YES
	198	85	85	YES
	199	88	88	YES
	200	84	85	YES
	201	87	88	YES

	233	85	85	YES
	234	85	85	YES
	238	84	85	YES
	264	84	85	YES
	265	84	85	YES
	266	84	85	YES
	267	84	85	YES
				YES

Environmental Supply Co, Inc
ES
800-STACKS-5
(782-2575)

PITOT TUBE CALIBRATION – VERIFICATION OF CONSTRUCTION SPECIFICATIONS

Pitot ID: P-154 Date: 3/27/98
Technician: [illegible]

1. D_t external tubing diameter — D_t = .375 inches

$0.188" < D_t$ 0.375" •

2. $\rho = \frac{\rho_A + \rho_B}{2}$ — $\rho_A + \rho_B$ = .956 inches; ρ = .478 inches

3. $Z = (\rho_A + \rho_B) \sin \gamma$ — γ = 0 °; Z = 0.0 inches

$Z < 0.125"$ ••

4. $W = (\rho_A + \rho_B) \sin \sigma$ — σ = 1 °; W = .017 inches

$W < 0.031"$ ••

5. $\beta_A, \beta_B < 5°$ •• — β_A = 0 °; β_B = 1 °

6. $\alpha_A, \alpha_B < 10°$ •• — α_A = 0 °; α_B = 0 °

•, •• Acceptable Limits.

• Standards of Performance for New Stationary Sources, Federal Register, 36 (247), December 23, 1971.

•• Valbra, R.F., "The Effects of Impact Opening Misalignment on the Value of the Type–S Pitot Tube Coefficient", U.S. EPA Emission Measurement Branch, Research Triangle Park, N.C., October 1976

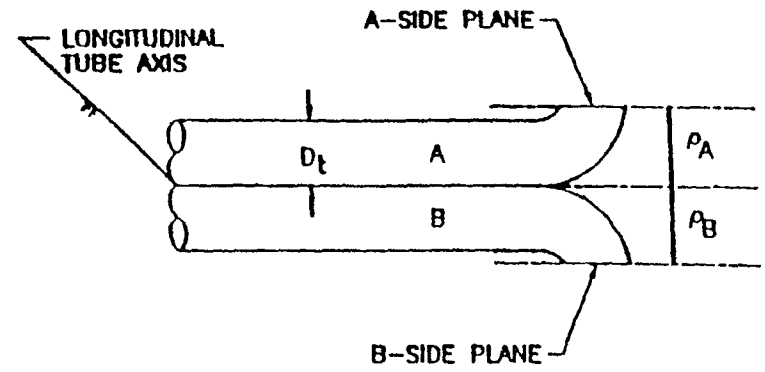

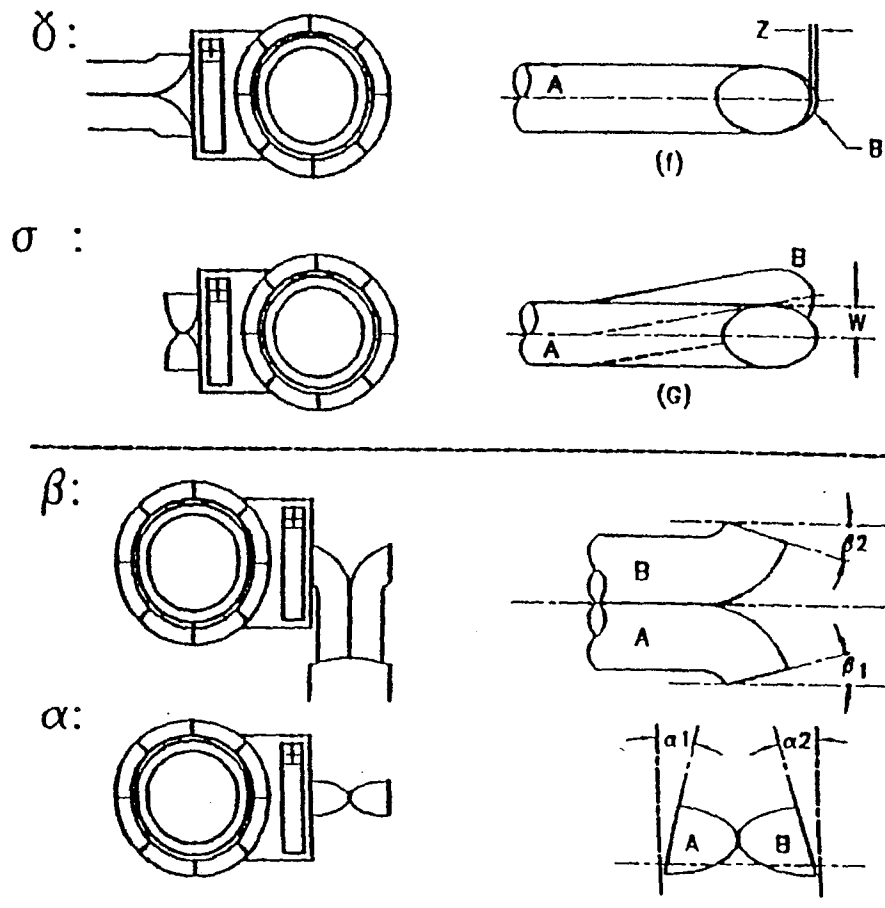

Environmental Supply Co., Inc.
800-STACKS-5
(782-2575)

PITOT TUBE CALIBRATION – VERIFICATION OF CONSTRUCTION SPECIFICATIONS

Pitot ID: P-155 Date: 3/27/98
Technician: MH

1. D_t external tubing diameter — D_t = .375 inches

$0.188" < D_t\ 0.375"$ •

2. $\rho = \frac{\rho_A + \rho_B}{2}$ — $\rho_A + \rho_B$ = .953 inches; ρ = .4765 inches

3. $Z = (\rho_A + \rho_B) \sin \gamma$ — γ = 0°; Z = 0.0 inches

$Z < 0.125"$ ••

4. $W = (\rho_A + \rho_B) \sin \sigma$ — σ = 1°; W = 0.017 inches

$W < 0.031"$ ••

5. $\beta_A, \beta_B < 5°$ •• — β_A = 1°; β_B = 1°

6. $\alpha_A, \alpha_B < 10°$ •• — α_A = 2°; α_B = 2°

•, •• Acceptable Limits.

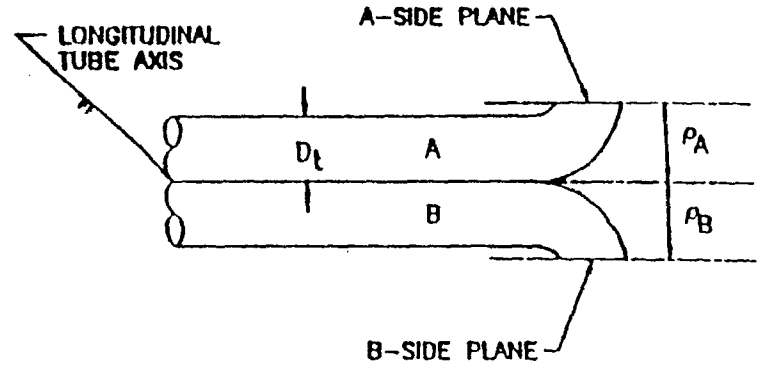

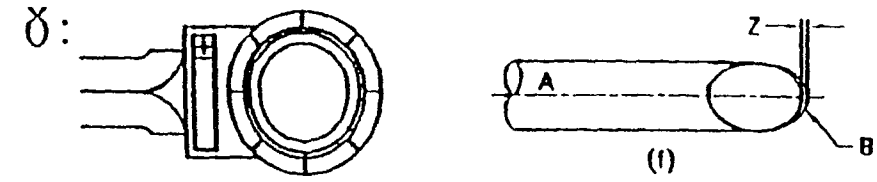

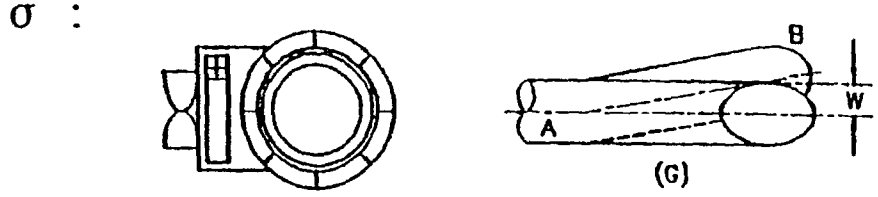

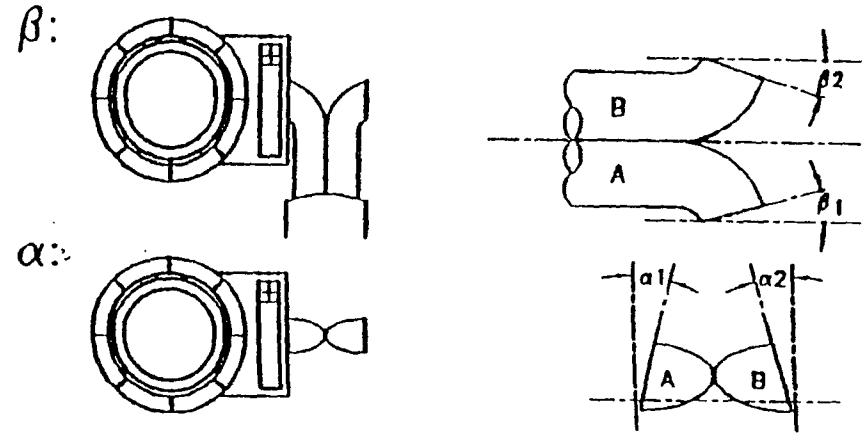

• Standards of Performance for New Stationary Sources, Federal Register, 36 (247), December 23, 1971.

•• Valbra, R.F., "The Effects of Impact Opening Misalignment on the Value of the Type-S Pitot Tube Coefficient", U.S. EPA Emission Measurement Branch, Research Triangle Park, N.C., October 1976

Environmental Supply Co., Inc.
ES
800-STACKS-5
(782-2575)

PITOT TUBE CALIBRATION – VERIFICATION OF CONSTRUCTION SPECIFICATIONS

Pitot ID: P-156 Date: 3-27-98
Technician: [illegible]

1. D_t external tubing diameter — D_t = .375 inches

$0.188" < D_t$ 0.375" •

$\rho_A + \rho_B$ = .948 inches

2. $\rho = \frac{\rho_A + \rho_B}{2}$ — ρ = .474 inches

3. $Z = (\rho_A + \rho_B) \sin \gamma$ — γ = 0°

$Z < 0.125"$ •• — Z = 0.0 inches

4. $W = (\rho_A + \rho_B) \sin \sigma$ — σ = 0.1°

$W < 0.031"$ •• — W = 0.0165 inches

5. $\beta_A, \beta_B < 5°$ •• — β_A = 1°, β_B = 1°

6. $\alpha_A, \alpha_B < 10°$ •• — α_A = 1°, α_B = 0°

•, •• Acceptable Limits.

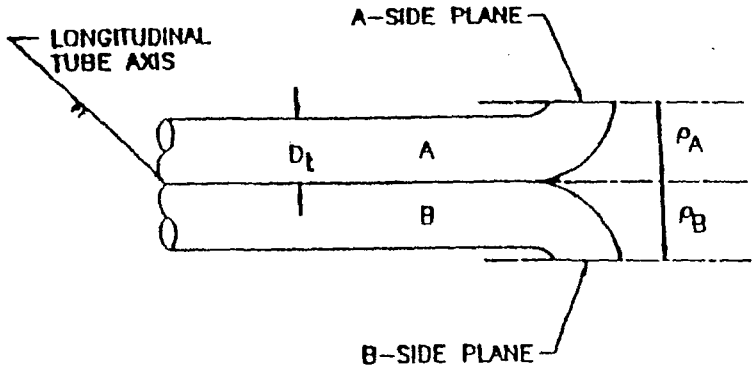

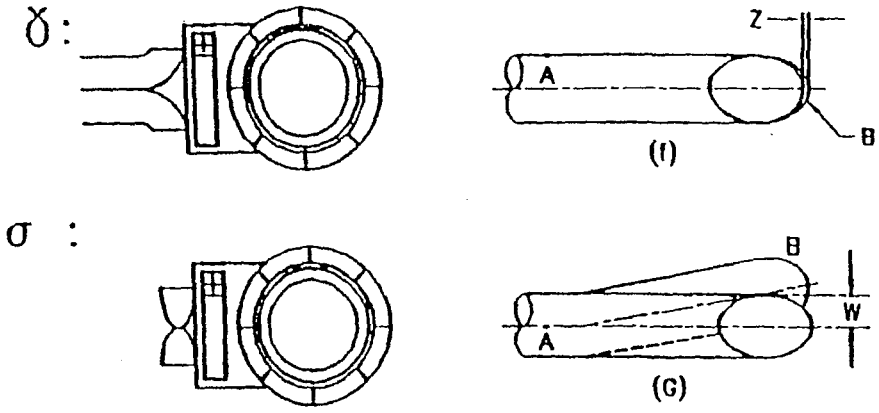

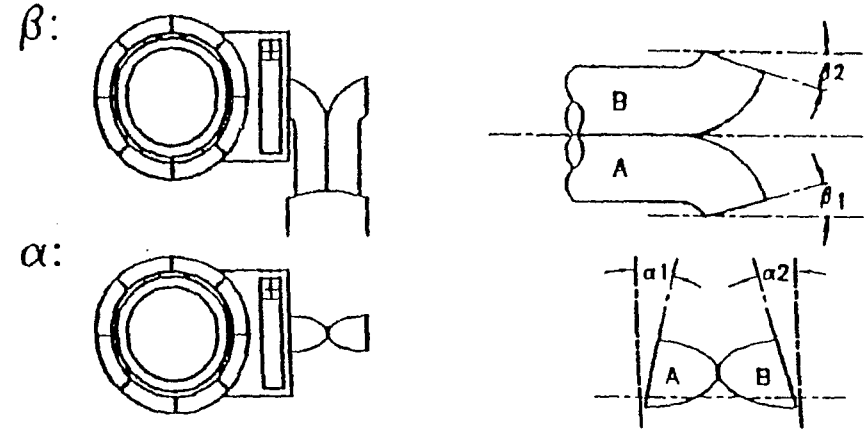

• Standards of Performance for New Stationary Sources, Federal Register, 36 (247), December 23, 1971.

•• Valbra, R.F., "The Effects of Impact Opening Misalignment on the Value of the Type-S Pitot Tube Coefficient", U.S. EPA Emission Measurement Branch, Research Triangle Park, N.C., October 1976

Environmental Supply Co, Inc
ES
800-STACKS-5
(782-2575)

PITOT TUBE CALIBRATION – VERIFICATION OF CONSTRUCTION SPECIFICATIONS

Pitot ID: P-157 Date: 3-27-98
Technician: BMH

1. D_t external tubing diameter — D_t = .375 inches

$0.188" < D_t$ 0.375" •

2. $\rho = \frac{\rho_A + \rho_B}{2}$ — $\rho_A + \rho_B$ = .943 inches; ρ = .4715 inches

3. $Z = (\rho_A + \rho_B) \sin \gamma$ — γ = 1 °; Z = 0.0165 inches

$Z < 0.125"$ ••

4. $W = (\rho_A + \rho_B) \sin \sigma$ — σ = 0 °; W = 0.0 inches

$W < 0.031"$ ••

5. $\beta_A, \beta_B < 5°$ •• — β_A = 0 °; β_B = 2 °

6. $\alpha_A, \alpha_B < 10°$ •• — α_A = 1 °; α_B = 0 °

•, •• Acceptable Limits.

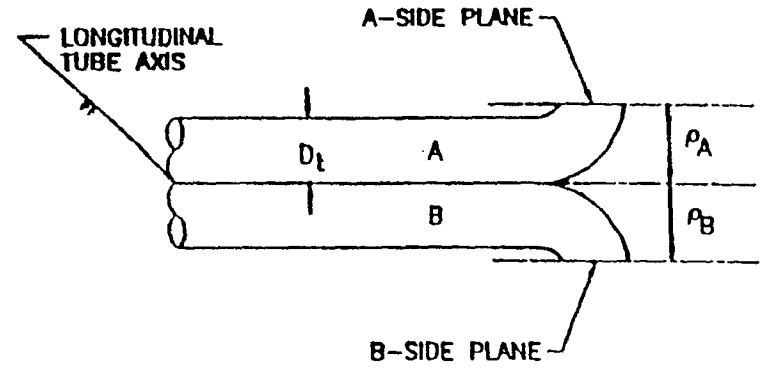

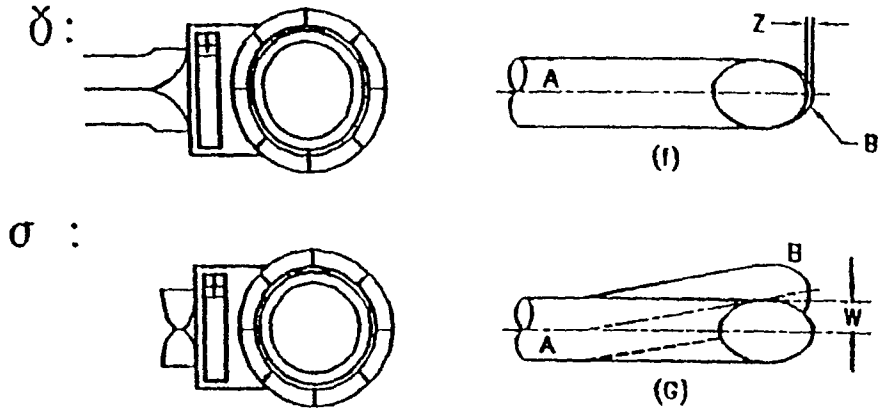

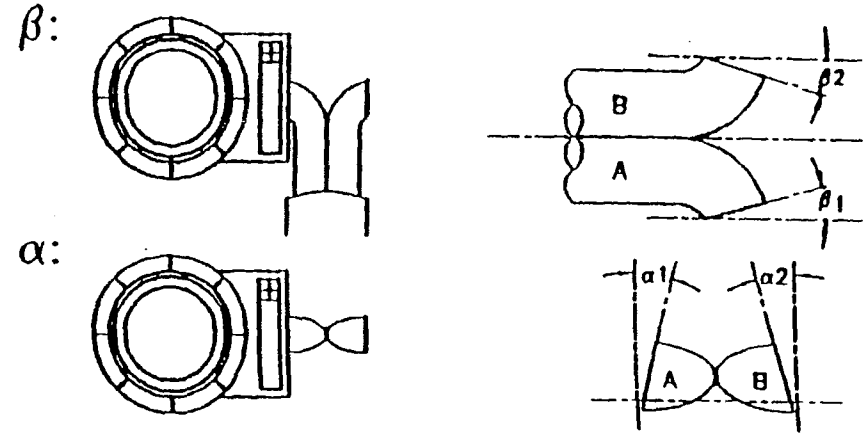

• Standards of Performance for New Stationary Sources, Federal Register, 36 (247), December 23, 1971.

•• Valbra, R.F., "The Effects of Impact Opening Misalignment on the Value of the Type-S Pitot Tube Coefficient", U.S. EPA Emission Measurement Branch, Research Triangle Park, N.C., October 1976

Environmental Supply Co, Inc.
ES
800-STACKS-5
(782-2575)

PITOT TUBE CALIBRATION – VERIFICATION OF CONSTRUCTION SPECIFICATIONS

Pitot ID: P-158 Date: 3-27-98
Technician: BMH

1. D_t external tubing diameter — D_t = .375 inches

$0.188" < D_t$ 0.375" •

$\rho_A + \rho_B$ = .950 inches

2. $\rho = \frac{\rho_A + \rho_B}{2}$ — ρ = .475 inches

3. $Z = (\rho_A + \rho_B) \sin \gamma$ — γ = 2°

$Z < 0.125"$ •• — Z = 0.033 inches

4. $W = (\rho_A + \rho_B) \sin \sigma$ — σ = Ø°

$W < 0.031"$ •• — W = 0.0 inches

5. $\beta_A, \beta_B < 5°$ •• — β_A = 0°, β_B = 2°

6. $\alpha_A, \alpha_B < 10°$ •• — α_A = 2°, α_B = 0°

•, •• Acceptable Limits.

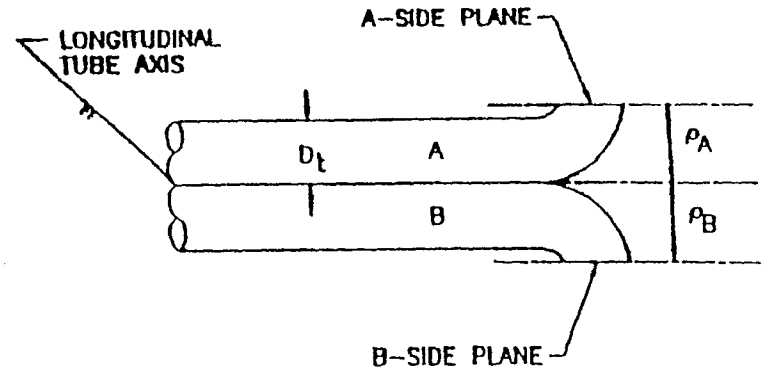

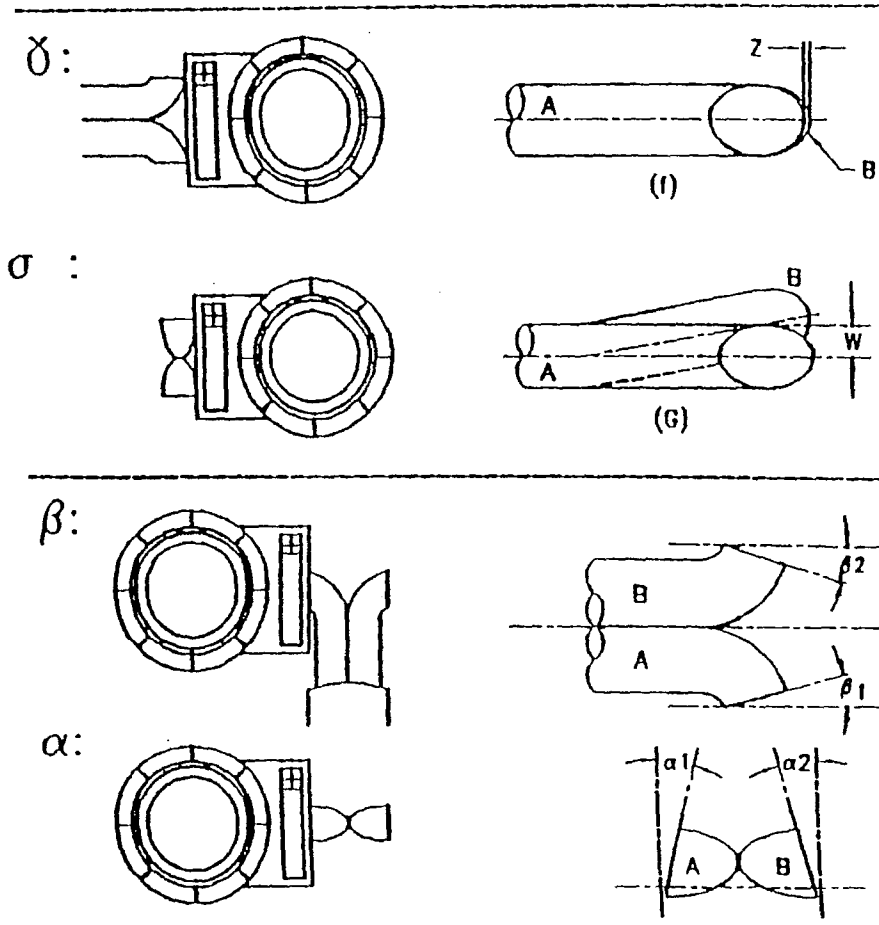

• Standards of Performance for New Stationary Sources, Federal Register, 36 (247), December 23, 1971.

•• Valbra, R.F., "The Effects of Impact Opening Misalignment on the Value of the Type-S Pitot Tube Coefficient", U.S. EPA Emission Measurement Branch, Research Triangle Park, N.C., October 1976

Environmental Supply Co., Inc.
800-STACKS-5
(782-2575)

PITOT TUBE CALIBRATION – VERIFICATION OF CONSTRUCTION SPECIFICATIONS

Pitot ID: P-160 Date: 2-27-96

Technician: [illegible]

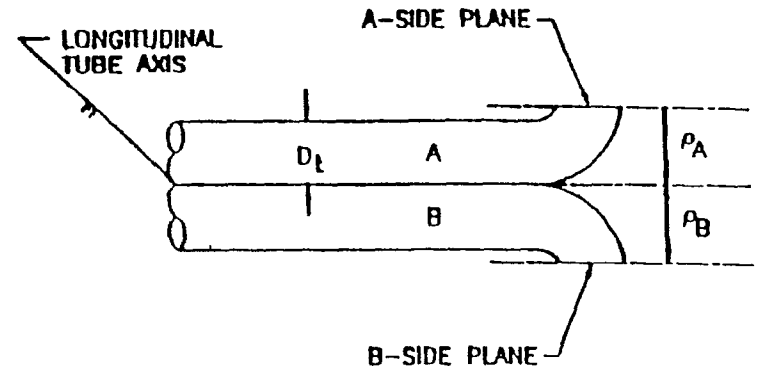

1. D_t external tubing diameter — D_t = .375 inches

$0.188" < D_t$ $0.375"$ •

$\rho_A + \rho_B$ = .945 inches

2. $\rho = \frac{\rho_A + \rho_B}{2}$ — ρ = .4725 inches

3. $Z = (\rho_A + \rho_B) \sin \gamma$ — γ = 3°

$Z < 0.125"$ •• — Z = 0.049 inches

4. $W = (\rho_A + \rho_B) \sin \sigma$ — σ = 1°

$W < 0.031"$ •• — W = 0.016 inches

5. $\beta_A, \beta_B < 5°$ •• — β_A = 0°, β_B = 1°

6. $\alpha_A, \alpha_B < 10°$ •• — α_A = 3°, α_B = 0°

•, •• Acceptable Limits.

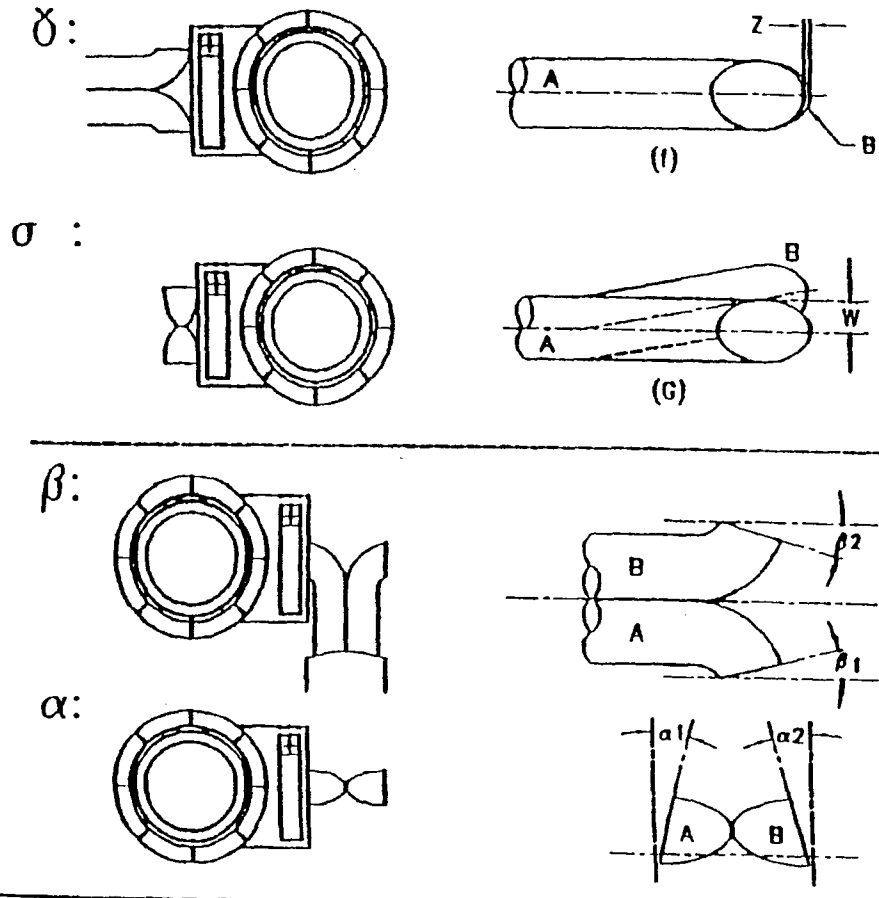

• Standards of Performance for New Stationary Sources, Federal Register, 36 (247), December 23, 1971.

•• Valbra, R.F., "The Effects of Impact Opening Misalignment on the Value of the Type-S Pitot Tube Coefficient", U.S. EPA Emission Measurement Branch, Research Triangle Park, N.C., October 1976

Environmental Supply Co. Inc
ES
800-STACKS-5
(782-2575)

PITOT TUBE CALIBRATION – VERIFICATION OF CONSTRUCTION SPECIFICATIONS

Pitot ID: P-101 Date: 3-27-98

Technician: [illegible]

1. D_t external tubing diameter — D_t = .375 inches

$0.188" < D_t$ $0.375"$ •

2. $\rho = \frac{\rho_A + \rho_B}{2}$ — $\rho_A + \rho_B$ = .953 inches; ρ = .4765 inches

3. $Z = (\rho_A + \rho_B) \sin \gamma$ — γ = 0°; Z = 0.0 inches

$Z < 0.125"$ ••

4. $W = (\rho_A + \rho_B) \sin \sigma$ — σ = 0°; W = 0.0 inches

$W < 0.031"$ ••

5. $\beta_A, \beta_B < 5°$ •• — β_A = 1°; β_B = 1°

6. $\alpha_A, \alpha_B < 10°$ •• — α_A = 4°; α_B = 3°

•, •• Acceptable Limits.

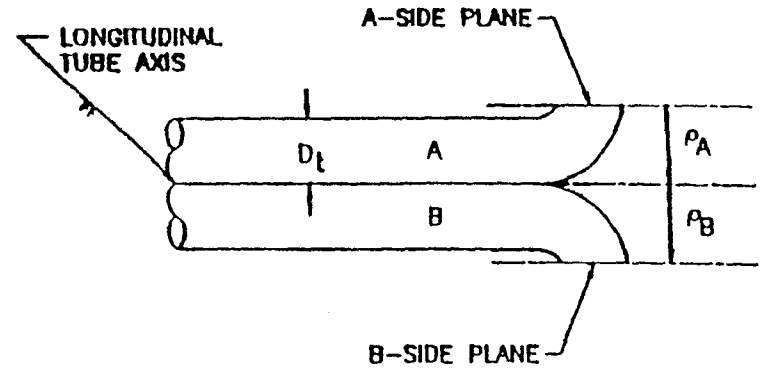

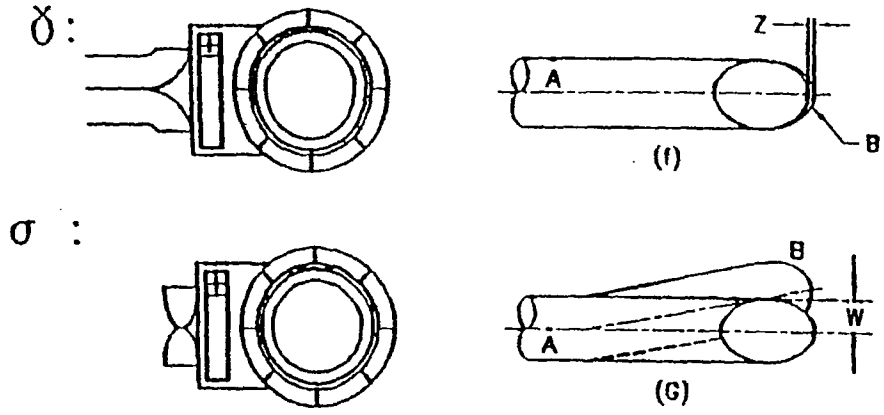

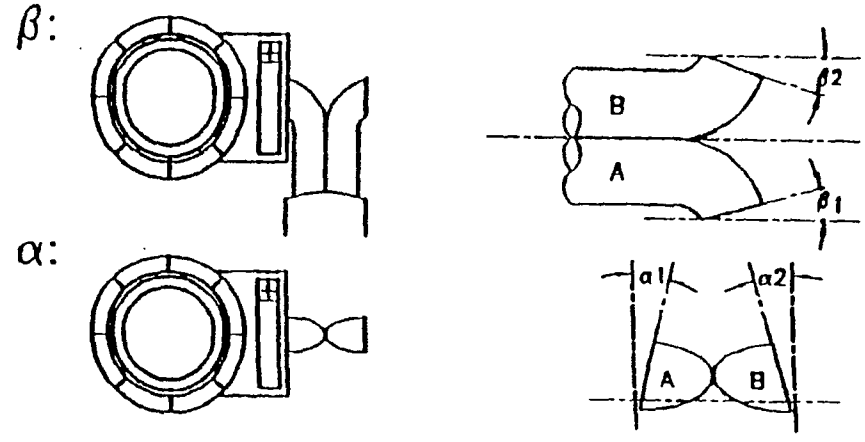

• Standards of Performance for New Stationary Sources, Federal Register, 36 (247), December 23, 1971.

•• Valbra, R.F., "The Effects of Impact Opening Misalignment on the Value of the Type-S Pitot Tube Coefficient", U.S. EPA Emission Measurement Branch, Research Triangle Park, N.C., October 1976

Environmental Supply Co., Inc.
800-STACKS-5
(782-2575)

PITOT TUBE CALIBRATION – VERIFICATION OF CONSTRUCTION SPECIFICATIONS

Pitot ID: P-164 Date: 3-27-98
Technician: BMH

1. D_t external tubing diameter — D_t = .375 inches

$0.188" < D_t$ $0.375"$ •

2. $\rho = \frac{\rho_A + \rho_B}{2}$ — $\rho_A + \rho_B$ = .951 inches; ρ = .4755 inches

3. $Z = (\rho_A + \rho_B) \sin \gamma$ — γ = 0 °; Z = 0.0 inches

$Z < 0.125"$ ••

4. $W = (\rho_A + \rho_B) \sin \sigma$ — σ = 1 °; W = 0.0166 inches

$W < 0.031"$ ••

5. $\beta_A, \beta_B < 5°$ •• — β_A = 0 °; β_B = 1 °

6. $\alpha_A, \alpha_B < 10°$ •• — α_A = 1 °; α_B = 0 °

•, •• Acceptable Limits.

• Standards of Performance for New Stationary Sources, Federal Register, 36 (247), December 23, 1971.

•• Valbra, R.F., "The Effects of Impact Opening Misalignment on the Value of the Type–S Pitot Tube Coefficient", U.S. EPA Emission Measurement Branch, Research Triangle Park, N.C., October 1976

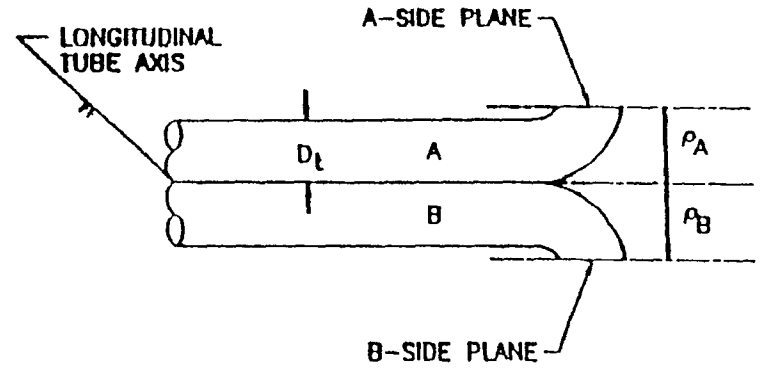

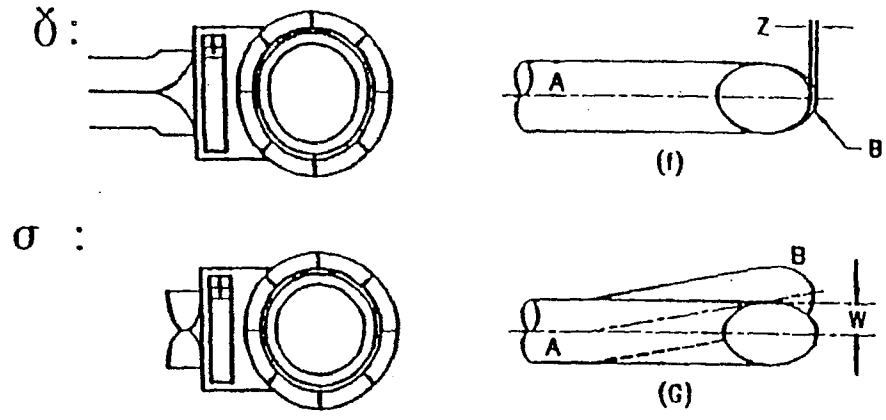

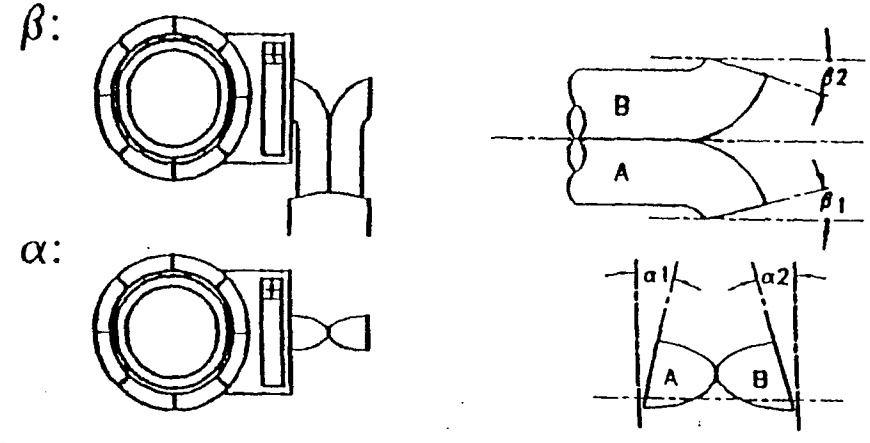

APPENDIX F

Source Seven-Day Drift Data

Covanta Huntington
SEVEN DAY CALIBRATION DRIFT

Source	Covanta Huntington	Dates	07/25/09 - 07/31/09
Location	Huntington NY	Unit	Unit #1 Econ
Monitor	O2 e 1	Model	Servomex 1420
Serial Number	3335	Span	25

	Day	Date	Time	Calibration Value	Monitor Response	Difference	Results
Zero Gas	1	07/25/09	6:53 AM	0.0	-0.04	0.0	**PASS**
	2	07/26/09	6:53 AM	0.0	-0.01	0.0	**PASS**
	3	07/27/09	6:53 AM	0.0	-0.05	0.1	**PASS**
	4	07/28/09	6:53 AM	0.0	-0.04	0.0	**PASS**
	5	07/29/09	6:53 AM	0.0	-0.04	0.0	**PASS**
	6	07/30/09	6:53 AM	0.0	-0.05	0.1	**PASS**
	7	07/31/09	6:53 AM	0.0	-0.05	0.1	**PASS**

	Day	Date	Time	Calibration Value	Monitor Response	Difference	Results
Span Gas	1	07/25/09	7:02 AM	17.42	17.35	0.1	**PASS**
	2	07/26/09	7:02 AM	17.42	17.21	0.2	**PASS**
	3	07/27/09	7:02 AM	17.42	17.24	0.2	**PASS**
	4	07/28/09	7:02 AM	17.42	17.30	0.1	**PASS**
	5	07/29/09	7:02 AM	17.42	17.23	0.2	**PASS**
	6	07/30/09	7:02 AM	17.42	17.15	0.3	**PASS**
	7	07/31/09	7:02 AM	17.42	17.30	0.1	**PASS**

Performance Specification for 24 hour Calibration Drift	
O_2 or CO_2	< 0.5 % O_2 or CO_2
O2 e 1	< 2.5 % of Span

Calibration Report

Company: Covanta Huntington, Inc.
99 Town Line Road

Northport, NY
Stack Designation: Stack #1
Parameter: O2e 1
Units: %
Serial #: 01440DIVO2/3335
Start of Report: 07/25/09 00:00
End of Report: 07/31/09 08:15

ZERO READINGS						SPAN READINGS							
START	STOP	EXPECT.	ACTUAL	ERROR	%	START	STOP	EXPECT.	ACTUAL	ERROR	%	STATUS
07/25/09 06:53	07/25/09 06:58	0.00	-0.04	-0.04	-0.1	07/25/09 07:02	07/25/09 07:06	17.42	17.35	-0.07	-0.2	OK
07/26/09 06:53	07/26/09 06:58	0.00	-0.01	-0.01	-0.0	07/26/09 07:02	07/26/09 07:06	17.42	17.21	-0.21	-0.8	OK
07/27/09 06:53	07/27/09 06:58	0.00	-0.05	-0.05	-0.2	07/27/09 07:02	07/27/09 07:06	17.42	17.24	-0.18	-0.7	OK
07/28/09 06:53	07/28/09 06:58	0.00	-0.04	-0.04	-0.1	07/28/09 07:02	07/28/09 07:06	17.42	17.30	-0.12	-0.4	OK
07/29/09 06:53	07/29/09 06:58	0.00	-0.04	-0.04	-0.1	07/29/09 07:02	07/29/09 07:06	17.42	17.23	-0.20	-0.7	OK
07/30/09 06:53	07/30/09 06:58	0.00	-0.05	-0.05	-0.2	07/30/09 07:02	07/30/09 07:06	17.42	17.15	-0.27	-1.0	OK
07/31/09 06:53	07/31/09 06:58	0.00	-0.05	-0.05	-0.2	07/31/09 07:02	07/31/09 07:06	17.42	17.30	-0.12	-0.4	OK

Date/Time Printed: 09/14/09 10:50

Covanta Huntington
SEVEN DAY CALIBRATION DRIFT

Source	Covanta Huntington	Dates	07/15/09 - 07/21/09
Location	Huntington NY	Unit	Unit #1 Stack
Monitor	O2	Model	California Anal 600
Serial Number	WO4036 O2	Span	25

	Day	Date	Time	Calibration Value	Monitor Response	Difference	Results
Zero Gas	1	7/15/2009	6:45 AM	0.0	-0.03	0.0	PASS
	2	7/16/2009	6:45 AM	0.0	-0.01	0.0	PASS
	3	7/17/2009	6:45 AM	0.0	-0.01	0.0	PASS
	4	7/18/2009	6:45 AM	0.0	-0.01	0.0	PASS
	5	7/19/2009	6:45 AM	0.0	-0.03	0.0	PASS
	6	7/20/2009	6:45 AM	0.0	-0.03	0.0	PASS
	7	7/21/2009	6:45 AM	0.0	0.00	0.0	PASS

	Day	Date	Time	Calibration Value	Monitor Response	Difference	Results
Span Gas	1	7/15/2009	6:50 AM	17.4	17.50	0.1	PASS
	2	7/16/2009	6:50 AM	17.4	17.35	0.1	PASS
	3	7/17/2009	6:50 AM	17.4	17.30	0.1	PASS
	4	7/18/2009	6:50 AM	17.4	17.25	0.2	PASS
	5	7/19/2009	6:50 AM	17.4	17.44	0.0	PASS
	6	7/20/2009	6:50 AM	17.4	17.49	0.1	PASS
	7	7/21/2009	6:50 AM	17.4	17.51	0.1	PASS

Performance Specification for 24-hour Calibration Drift	
O_2 or CO_2	< 0.5 % O_2 or CO_2
O2	< 2.5 % of Span

Calibration Report

Company: Covanta Huntington, Inc.
99 Town Line Road

Northport, NY
Stack Designation: Stack #1
Parameter: O2 S1
Units: ppm
Serial #: WO4036 O2
Start of Report: 07/15/09 00:00
End of Report: 07/21/09 23:59

ZERO READINGS						SPAN READINGS							
START	STOP	EXPECT.	ACTUAL	ERROR	%	START	STOP	EXPECT.	ACTUAL	ERROR	%	STATUS
07/15/09 06:45	07/15/09 06:50	0.00	-0.03	-0.03	-0.1	07/15/09 06:50	07/15/09 06:54	17.42	17.50	0.08	0.3	OK
07/16/09 06:45	07/16/09 06:50	0.00	-0.01	-0.01	-0.0	07/16/09 06:50	07/16/09 06:54	17.42	17.35	-0.07	-0.2	OK
07/17/09 06:45	07/17/09 06:50	0.00	-0.01	-0.01	-0.0	07/17/09 06:50	07/17/09 06:54	17.42	17.30	-0.12	-0.4	OK
07/18/09 06:45	07/18/09 06:50	0.00	-0.01	-0.01	-0.0	07/18/09 06:50	07/18/09 06:54	17.42	17.25	-0.17	-0.6	OK
07/19/09 06:45	07/19/09 06:50	0.00	-0.03	-0.03	-0.1	07/19/09 06:50	07/19/09 06:54	17.42	17.44	0.02	0.0	OK
07/20/09 06:45	07/20/09 06:50	0.00	-0.03	-0.03	-0.1	07/20/09 06:50	07/20/09 06:54	17.42	17.49	0.07	0.2	OK
07/21/09 06:45	07/21/09 06:50	0.00	0.00	0.00	0.0	07/21/09 06:50	07/21/09 06:54	17.42	17.51	0.09	0.3	OK

Date/Time Printed: 09/14/09 09:36

Covanta Huntington
SEVEN DAY CALIBRATION DRIFT

Source	Covanta Huntington	Dates	07/15/09 - 07/21/09
Location	Huntington NY	Unit	Unit #1 Stack
Monitor	NOx	Model	California Anal 600
Serial Number	WO4036 NOx	Span	500

	Day	Date	Time	Calibration Value	Monitor Response	Difference	% of Span	Results
Zero Gas	1	7/15/2009	6:45 AM	0.0	0.0	0.0	0.0%	PASS
	2	7/16/2009	6:45 AM	0.0	0.0	0.0	0.0%	PASS
	3	7/17/2009	6:45 AM	0.0	0.0	0.0	0.0%	PASS
	4	7/18/2009	6:45 AM	0.0	0.0	0.0	0.0%	PASS
	5	7/19/2009	6:45 AM	0.0	0.0	0.0	0.0%	PASS
	6	7/20/2009	6:45 AM	0.0	0.0	0.0	0.0%	PASS
	7	7/21/2009	6:45 AM	0.0	0.3	0.3	0.1%	PASS

	Day	Date	Time	Calibration Value	Monitor Response	Difference	% of Span	Results
Span Gas	1	7/15/2009	6:54 AM	406.5	404.5	2.0	0.4%	PASS
	2	7/16/2009	6:54 AM	406.5	405.5	1.0	0.2%	PASS
	3	7/17/2009	6:54 AM	406.5	405.5	1.0	0.2%	PASS
	4	7/18/2009	6:54 AM	406.5	406.0	0.5	0.1%	PASS
	5	7/19/2009	6:54 AM	406.5	405.3	1.3	0.3%	PASS
	6	7/20/2009	6:54 AM	406.5	405.3	1.3	0.3%	PASS
	7	7/21/2009	6:54 AM	406.5	405.3	1.3	0.3%	PASS

Performance Specification for 24-hour Calibration Drift	
O_2 or CO_2	< 0.5 % O_2 or CO_2
NOx	< 2.5 % of Span

Calibration Report

Company: Covanta Huntington, Inc.
99 Town Line Road

Northport, NY

Stack Designation: Stack #1
Parameter: NOx S1
Units: ppm
Serial #: WO4036 NOx
Start of Report: 07/15/09 00:00
End of Report: 07/21/09 23:59

ZERO READINGS

START	STOP	EXPECT.	ACTUAL	ERROR	%
07/15/09 06:45	07/15/09 06:50	0.00	0.00	0.00	0.0
07/16/09 06:45	07/16/09 06:50	0.00	0.00	0.00	0.0
07/17/09 06:45	07/17/09 06:50	0.00	0.00	0.00	0.0
07/18/09 06:45	07/18/09 06:50	0.00	0.00	0.00	0.0
07/19/09 06:45	07/19/09 06:50	0.00	0.00	0.00	0.0
07/20/09 06:45	07/20/09 06:50	0.00	0.00	0.00	0.0
07/21/09 06:45	07/21/09 06:50	0.00	0.25	0.25	0.0

SPAN READINGS

START	STOP	EXPECT.	ACTUAL	ERROR	%	STATUS
07/15/09 06:54	07/15/09 06:59	406.70	404.50	-2.20	-0.4	OK
07/16/09 06:54	07/16/09 06:59	406.70	405.50	-1.20	-0.2	OK
07/17/09 06:54	07/17/09 06:59	406.70	405.50	-1.20	-0.2	OK
07/18/09 06:54	07/18/09 06:59	406.70	406.00	-0.70	-0.1	OK
07/19/09 06:54	07/19/09 06:59	406.70	405.25	-1.45	-0.2	OK
07/20/09 06:54	07/20/09 06:59	406.70	405.25	-1.45	-0.2	OK
07/21/09 06:54	07/21/09 06:59	406.70	405.25	-1.45	-0.2	OK

Date/Time Printed: 09/14/09 09:26

Covanta Huntington
SEVEN DAY CALIBRATION DRIFT

Source	Covanta Huntington	**Dates**	07/25/09 - 07/31/09
Location	Huntington NY	**Unit**	Unit #2 Econ
Monitor	O2 e 2	**Model**	Servomex 1420
Serial Number	3337	**Span**	25

	Day	Date	Time	Calibration Value	Monitor Response	Difference	Results
Zero Gas	1	07/25/09	6:53 AM	0.0	-0.06	0.1	**PASS**
	2	07/26/09	6:53 AM	0.0	-0.06	0.1	**PASS**
	3	07/27/09	6:53 AM	0.0	-0.06	0.1	**PASS**
	4	07/28/09	6:53 AM	0.0	-0.06	0.1	**PASS**
	5	07/29/09	6:53 AM	0.0	-0.05	0.1	**PASS**
	6	07/30/09	6:53 AM	0.0	-0.05	0.1	**PASS**
	7	07/31/09	6:53 AM	0.0	-0.06	0.1	**PASS**

	Day	Date	Time	Calibration Value	Monitor Response	Difference	Results
Span Gas	1	07/25/09	7:02 AM	17.42	17.14	0.3	**PASS**
	2	07/26/09	7:02 AM	17.42	17.13	0.3	**PASS**
	3	07/27/09	7:02 AM	17.42	17.11	0.3	**PASS**
	4	07/28/09	7:02 AM	17.42	17.18	0.2	**PASS**
	5	07/29/09	7:02 AM	17.42	17.15	0.3	**PASS**
	6	07/30/09	7:02 AM	17.42	17.08	0.3	**PASS**
	7	07/31/09	7:02 AM	17.42	17.14	0.3	**PASS**

Performance Specification for 24 hour Calibration Drift	
O_2 or CO_2	< 0.5 % O_2 or CO_2
O2 e 2	< 2.5 % of Span

Calibration Report

COVANTA ENERGY

Company: Covanta Huntington, Inc.
99 Town Line Road

Northport, NY

Stack Designation: Stack#2
Parameter: O2e 2
Units: %
Serial #: 01440DIVO2/3337
Start of Report: 07/25/09 00:00
End of Report: 07/31/09 08:15

ZERO READINGS						SPAN READINGS							
START	STOP	EXPECT.	ACTUAL	ERROR	%	START	STOP	EXPECT.	ACTUAL	ERROR	%	STATUS
07/25/09 06:53	07/25/09 06:58	0.00	-0.06	-0.06	-0.2	07/25/09 07:02	07/25/09 07:06	17.42	17.14	-0.28	-1.1	OK
07/26/09 06:53	07/26/09 06:58	0.00	-0.06	-0.06	-0.2	07/26/09 07:02	07/26/09 07:06	17.42	17.13	-0.30	-1.1	OK
07/27/09 06:53	07/27/09 06:58	0.00	-0.06	-0.06	-0.2	07/27/09 07:02	07/27/09 07:06	17.42	17.11	-0.31	-1.2	OK
07/28/09 06:53	07/28/09 06:58	0.00	-0.06	-0.06	-0.2	07/28/09 07:02	07/28/09 07:06	17.42	17.18	-0.25	-0.9	OK
07/29/09 06:53	07/29/09 06:58	0.00	-0.05	-0.05	-0.2	07/29/09 07:02	07/29/09 07:06	17.42	17.15	-0.27	-1.0	OK
07/30/09 06:53	07/30/09 06:58	0.00	-0.05	-0.05	-0.2	07/30/09 07:02	07/30/09 07:06	17.42	17.08	-0.35	-1.3	OK
07/31/09 06:53	07/31/09 06:58	0.00	-0.06	-0.06	-0.2	07/31/09 07:02	07/31/09 07:06	17.42	17.14	-0.28	-1.1	OK

Date/Time Printed: 09/14/09 11:17

Covanta Huntington
SEVEN DAY CALIBRATION DRIFT

Source	Covanta Huntington	Dates	07/09/09 - 07/15/09
Location	Huntington NY	Unit	Unit #2 Stack
Monitor	O2	Model	California Anal 600
Serial Number	WO4037 O2	Span	25

	Day	Date	Time	Calibration Value	Monitor Response	Difference	Results
Zero Gas	1	7/9/2009	6:45 AM	0.0	0.16	0.2	PASS
	2	7/10/2009	6:45 AM	0.0	0.18	0.2	PASS
	3	7/11/2009	6:45 AM	0.0	0.18	0.2	PASS
	4	7/12/2009	6:45 AM	0.0	0.18	0.2	PASS
	5	7/13/2009	6:45 AM	0.0	0.19	0.2	PASS
	6	7/14/2009	6:45 AM	0.0	0.09	0.1	PASS
	7	7/15/2009	6:45 AM	0.0	0.14	0.1	PASS

	Day	Date	Time	Calibration Value	Monitor Response	Difference	Results
Span Gas	1	7/9/2009	6:50 AM	17.42	17.58	0.2	PASS
	2	7/10/2009	6:50 AM	17.42	17.70	0.3	PASS
	3	7/11/2009	6:50 AM	17.42	17.65	0.2	PASS
	4	7/12/2009	6:50 AM	17.42	17.46	0.0	PASS
	5	7/13/2009	6:50 AM	17.42	17.49	0.1	PASS
	6	7/14/2009	6:50 AM	17.42	17.39	0.0	PASS
	7	7/15/2009	6:50 AM	17.42	17.51	0.1	PASS

Performance Specification for 24 hour Calibration Drift	
O_2 or CO_2	< 0.5 % O_2 or CO_2
O2	< 2.5 % of Span

Calibration Report

Company: Covanta Huntington, Inc.
99 Town Line Road

Northport, NY
Stack Designation: Stack#2
Parameter: O2 S2
Units: %
Serial #: W04037 O2
Start of Report: 07/09/09 00:00
End of Report: 07/15/09 08:00

ZERO READINGS						SPAN READINGS						
START	STOP	EXPECT.	ACTUAL	ERROR	%	START	STOP	EXPECT.	ACTUAL	ERROR	%	STATUS
07/09/09 06:45	07/09/09 06:50	0.00	0.16	0.16	0.6	07/09/09 06:50	07/09/09 06:54	17.42	17.58	0.16	0.6	OK
07/10/09 06:45	07/10/09 06:50	0.00	0.18	0.18	0.7	07/10/09 06:50	07/10/09 06:54	17.42	17.70	0.28	1.1	OK
07/11/09 06:45	07/11/09 06:50	0.00	0.18	0.18	0.7	07/11/09 06:50	07/11/09 06:54	17.42	17.65	0.23	0.9	OK
07/12/09 06:45	07/12/09 06:50	0.00	0.18	0.18	0.7	07/12/09 06:50	07/12/09 06:54	17.42	17.46	0.04	0.1	OK
07/13/09 06:45	07/13/09 06:50	0.00	0.19	0.19	0.7	07/13/09 06:50	07/13/09 06:54	17.42	17.49	0.07	0.2	OK
07/14/09 06:45	07/14/09 06:50	0.00	0.09	0.09	0.3	07/14/09 06:50	07/14/09 06:54	17.42	17.39	-0.03	-0.1	OK
07/15/09 06:45	07/15/09 06:50	0.00	0.14	0.14	0.5	07/15/09 06:50	07/15/09 06:54	17.42	17.51	0.09	0.3	OK

Date/Time Printed: 09/14/09 10:10

Covanta Huntington
SEVEN DAY CALIBRATION DRIFT

Source	Covanta Huntington	Dates	07/09/09 - 07/15/09
Location	Huntington NY	Unit	Unit #2 Stack
Monitor	NOx	Model	California Anal 600
Serial Number	WO4037 NOx	Span	500

	Day	Date	Time	Calibration Value	Monitor Response	Difference	% of Span	Results
Zero Gas	1	7/9/2009	6:45 AM	0.0	-0.3	0.3	0.1%	PASS
	2	7/10/2009	6:45 AM	0.0	0.0	0.0	0.0%	PASS
	3	7/11/2009	6:45 AM	0.0	0.0	0.0	0.0%	PASS
	4	7/12/2009	6:45 AM	0.0	-0.3	0.3	0.1%	PASS
	5	7/13/2009	6:45 AM	0.0	-0.3	0.3	0.1%	PASS
	6	7/14/2009	6:45 AM	0.0	-0.3	0.3	0.1%	PASS
	7	7/15/2009	6:45 AM	0.0	-0.5	0.5	0.1%	PASS

	Day	Date	Time	Calibration Value	Monitor Response	Difference	% of Span	Results
Span Gas	1	7/9/2009	6:54 AM	406.5	410.5	4.0	0.8%	PASS
	2	7/10/2009	6:54 AM	406.5	405.5	1.0	0.2%	PASS
	3	7/11/2009	6:54 AM	406.5	405.3	1.3	0.3%	PASS
	4	7/12/2009	6:54 AM	406.5	408.0	1.5	0.3%	PASS
	5	7/13/2009	6:54 AM	406.5	404.3	2.3	0.5%	PASS
	6	7/14/2009	6:54 AM	406.5	411.0	4.5	0.9%	PASS
	7	7/15/2009	6:54 AM	406.5	411.3	4.8	1.0%	PASS

Performance Specification for 24 hour Calibration Drift	
O_2 or CO_2	< 0.5 % O_2 or CO_2
NOx	< 2.5 % of Span

Calibration Report

COVANTA ENERGY

Company: Covanta Huntington, Inc.
99 Town Line Road

Northport, NY

Stack Designation: Stack#2
Parameter: NOX S2
Units: ppm
Serial #: W04037 NOx
Start of Report: 07/09/09 00:00
End of Report: 07/15/09 08:00

ZERO READINGS						SPAN READINGS							
START	STOP	EXPECT.	ACTUAL	ERROR	%	START	STOP	EXPECT.	ACTUAL	ERROR	%	STATUS
07/09/09 06:45	07/09/09 06:50	0.00	-0.25	-0.25	-0.0	07/09/09 06:54	07/09/09 06:59	406.70	410.50	3.80	0.7	OK
07/10/09 06:45	07/10/09 06:50	0.00	0.00	0.00	0.0	07/10/09 06:54	07/10/09 06:59	406.70	405.50	-1.20	-0.2	OK
07/11/09 06:45	07/11/09 06:50	0.00	0.00	0.00	0.0	07/11/09 06:54	07/11/09 06:59	406.70	405.25	-1.45	-0.2	OK
07/12/09 06:45	07/12/09 06:50	0.00	-0.25	-0.25	-0.0	07/12/09 06:54	07/12/09 06:59	406.70	408.00	1.30	0.2	OK
07/13/09 06:45	07/13/09 06:50	0.00	-0.25	-0.25	-0.0	07/13/09 06:54	07/13/09 06:59	406.70	404.25	-2.45	-0.4	OK
07/14/09 06:45	07/14/09 06:50	0.00	-0.25	-0.25	-0.0	07/14/09 06:54	07/14/09 06:59	406.70	411.00	4.30	0.8	OK
07/15/09 06:45	07/15/09 06:50	0.00	-0.50	-0.50	-0.1	07/15/09 06:54	07/15/09 06:59	406.70	411.25	4.55	0.9	OK

Date/Time Printed: 09/14/09 10:23

Covanta Huntington
SEVEN DAY CALIBRATION DRIFT

Source	Covanta Huntington	**Dates**	07/25/09 - 07/31/09
Location	Huntington NY	**Unit**	Unit #3 Econ
Monitor	O2 e 3	**Model**	Servomex 1420
Serial Number	3343	**Span**	25

	Day	Date	Time	Calibration Value	Monitor Response	Difference	Results
Zero Gas	1	07/25/09	6:53 AM	0.0	-0.05	0.1	**PASS**
	2	07/26/09	6:53 AM	0.0	-0.05	0.1	**PASS**
	3	07/27/09	6:53 AM	0.0	-0.04	0.0	**PASS**
	4	07/28/09	6:53 AM	0.0	-0.04	0.0	**PASS**
	5	07/29/09	6:53 AM	0.0	-0.03	0.0	**PASS**
	6	07/30/09	6:53 AM	0.0	-0.03	0.0	**PASS**
	7	07/31/09	6:53 AM	0.0	-0.04	0.0	**PASS**

	Day	Date	Time	Calibration Value	Monitor Response	Difference	Results
Span Gas	1	07/25/09	7:02 AM	17.42	17.44	0.0	**PASS**
	2	07/26/09	7:02 AM	17.42	17.41	0.0	**PASS**
	3	07/27/09	7:02 AM	17.42	17.43	0.0	**PASS**
	4	07/28/09	7:02 AM	17.42	17.44	0.0	**PASS**
	5	07/29/09	7:02 AM	17.42	17.41	0.0	**PASS**
	6	07/30/09	7:02 AM	17.42	17.33	0.1	**PASS**
	7	07/31/09	7:02 AM	17.42	17.40	0.0	**PASS**

Performance Specification for 24 hour Calibration Drift	
O_2 or CO_2	< 0.5 % O_2 or CO_2
O2 e 3	< 2.5 % of Span

Calibration Report

COVANTA ENERGY

Company: Covanta Huntington, Inc.
99 Town Line Road

Northport, NY
Stack Designation: Stack #3
Parameter: O2e 3
Units: %
Serial #: 01440DIVO2/3343
Start of Report: 07/25/09 00:00
End of Report: 07/31/09 08:15

ZERO READINGS						SPAN READINGS							
START	STOP	EXPECT.	ACTUAL	ERROR	%	START	STOP	EXPECT.	ACTUAL	ERROR	%	STATUS
07/25/09 06:53	07/25/09 06:58	0.00	-0.05	-0.05	-0.2	07/25/09 07:02	07/25/09 07:06	17.42	17.44	0.02	0.0	OK
07/26/09 06:53	07/26/09 06:58	0.00	-0.05	-0.05	-0.2	07/26/09 07:02	07/26/09 07:06	17.42	17.41	-0.01	-0.0	OK
07/27/09 06:53	07/27/09 06:58	0.00	-0.04	-0.04	-0.1	07/27/09 07:02	07/27/09 07:06	17.42	17.43	0.01	0.0	OK
07/28/09 06:53	07/28/09 06:58	0.00	-0.04	-0.04	-0.1	07/28/09 07:02	07/28/09 07:06	17.42	17.44	0.02	0.0	OK
07/29/09 06:53	07/29/09 06:58	0.00	-0.03	-0.03	-0.1	07/29/09 07:02	07/29/09 07:06	17.42	17.41	-0.01	-0.0	OK
07/30/09 06:53	07/30/09 06:58	0.00	-0.03	-0.03	-0.1	07/30/09 07:02	07/30/09 07:06	17.42	17.33	-0.10	-0.3	OK
07/31/09 06:53	07/31/09 06:58	0.00	-0.04	-0.04	-0.1	07/31/09 07:02	07/31/09 07:06	17.42	17.40	-0.02	-0.0	OK

Date/Time Printed: 09/14/09 11:28

Covanta Huntington
SEVEN DAY CALIBRATION DRIFT

Source	Covanta Huntington	Dates	07/15/09 - 07/21/09
Location	Huntington NY	Unit	Unit #3 Stack
Monitor	O2	Model	California Anal 600
Serial Number	WO4038 O2	Span	25

	Day	Date	Time	Calibration Value	Monitor Response	Difference	Results
Zero Gas	1	07/15/09	6:45 AM	0.0	0.05	0.1	**PASS**
	2	07/16/09	6:45 AM	0.0	0.03	0.0	**PASS**
	3	07/17/09	6:45 AM	0.0	0.06	0.1	**PASS**
	4	07/18/09	6:45 AM	0.0	0.00	0.0	**PASS**
	5	07/19/09	6:45 AM	0.0	0.10	0.1	**PASS**
	6	07/20/09	6:45 AM	0.0	0.09	0.1	**PASS**
	7	07/21/09	6:45 AM	0.0	0.00	0.0	**PASS**

	Day	Date	Time	Calibration Value	Monitor Response	Difference	Results
Span Gas	1	07/15/09	6:50 AM	17.4	17.70	0.3	**PASS**
	2	07/16/09	6:50 AM	17.4	17.53	0.1	**PASS**
	3	07/17/09	6:50 AM	17.4	17.51	0.1	**PASS**
	4	07/18/09	6:50 AM	17.4	17.48	0.1	**PASS**
	5	07/19/09	6:50 AM	17.4	17.68	0.3	**PASS**
	6	07/20/09	6:50 AM	17.4	17.71	0.3	**PASS**
	7	07/21/09	6:50 AM	17.4	17.59	0.2	**PASS**

Performance Specification for 24 hour Calibration Drift	
O_2 or CO_2	< 0.5 % O_2 or CO_2
O2	< 2.5 % of Span

Calibration Report

COVANTA ENERGY

Company: Covanta Huntington, Inc.
99 Town Line Road

Northport, NY
Stack Designation: Stack #3
Parameter: O2 S3
Units: %
Serial #: W04038 O2
Start of Report: 07/15/09 00:00
End of Report: 07/21/09 08:15

ZERO READINGS						SPAN READINGS							
START	STOP	EXPECT.	ACTUAL	ERROR	%	START	STOP	EXPECT.	ACTUAL	ERROR	%	STATUS
07/15/09 06:45	07/15/09 06:50	0.00	0.05	0.05	0.2	07/15/09 06:50	07/15/09 06:54	17.42	17.70	0.28	1.1	OK
07/16/09 06:45	07/16/09 06:50	0.00	0.03	0.03	0.1	07/16/09 06:50	07/16/09 06:54	17.42	17.53	0.11	0.4	OK
07/17/09 06:45	07/17/09 06:50	0.00	0.06	0.06	0.2	07/17/09 06:50	07/17/09 06:54	17.42	17.51	0.09	0.3	OK
07/18/09 06:45	07/18/09 06:50	0.00	0.08	0.08	0.3	07/18/09 06:50	07/18/09 06:54	17.42	17.48	0.06	0.2	OK
07/19/09 06:45	07/19/09 06:50	0.00	0.10	0.10	0.4	07/19/09 06:50	07/19/09 06:54	17.42	17.68	0.26	1.0	OK
07/20/09 06:45	07/20/09 06:50	0.00	0.09	0.09	0.3	07/20/09 06:50	07/20/09 06:54	17.42	17.71	0.29	1.1	OK
07/21/09 06:45	07/21/09 06:50	0.00	0.00	0.00	0.0	07/21/09 06:50	07/21/09 06:54	17.42	17.59	0.17	0.6	OK

Date/Time Printed: 09/14/09 11:02

Covanta Huntington
SEVEN DAY CALIBRATION DRIFT

Source	Covanta Huntington	Dates	07/23/09 - 07/29/09
Location	Huntington NY	Unit	Unit #3 Stack
Monitor	NOx	Model	California Anal 600
Serial Number	WO4038 NOx	Span	500

	Day	Date	Time	Calibration Value	Monitor Response	Difference	% of Span	Results
Zero Gas	1	07/23/09	7:45 AM	0.0	-0.25	0.3	0.1%	**PASS**
	2	07/24/09	7:45 AM	0.0	-0.50	0.5	0.1%	**PASS**
	3	07/25/09	7:45 AM	0.0	0.00	0.0	0.0%	**PASS**
	4	07/26/09	7:45 AM	0.0	0.00	0.0	0.0%	**PASS**
	5	07/27/09	7:45 AM	0.0	0.00	0.0	0.0%	**PASS**
	6	07/28/09	7:45 AM	0.0	-0.25	0.3	0.1%	**PASS**
	7	07/29/09	7:45 AM	0.0	-0.25	0.3	0.1%	**PASS**

	Day	Date	Time	Calibration Value	Monitor Response	Difference	% of Span	Results
Span Gas	1	07/23/09	7:54 AM	406.5	405.00	1.5	0.3%	**PASS**
	2	07/24/09	7:54 AM	406.5	406.75	0.3	0.1%	**PASS**
	3	07/25/09	7:54 AM	406.5	406.00	0.5	0.1%	**PASS**
	4	07/26/09	7:54 AM	406.5	404.50	2.0	0.4%	**PASS**
	5	07/27/09	7:54 AM	406.5	402.00	4.5	0.9%	**PASS**
	6	07/28/09	7:54 AM	406.5	403.00	3.5	0.7%	**PASS**
	7	07/29/09	7:54 AM	406.5	401.50	5.0	1.0%	**PASS**

Performance Specification for 24 hour Calibration Drift	
O_2 or CO_2	< 0.5 % O_2 or CO_2
NOx	< 2.5 % of Span

Calibration Report

COVANTA ENERGY

Company: Covanta Huntington, Inc.
99 Town Line Road

Northport, NY
Stack Designation: Stack #3
Parameter: NOX S3
Units: ppm
Serial #: W04038 NOX
Start of Report: 07/23/09 00:00
End of Report: 07/29/09 08:15

	ZERO READINGS						SPAN READINGS							
	START	STOP	EXPECT.	ACTUAL	ERROR	%	START	STOP	EXPECT.	ACTUAL	ERROR	%	STATUS
	07/23/09 07:45	07/23/09 07:50	0.00	-0.25	-0.25	-0.0	07/23/09 07:54	07/23/09 07:59	406.70	405.00	-1.70	-0.3	OK
	07/24/09 07:45	07/24/09 07:50	0.00	-0.50	-0.50	-0.1	07/24/09 07:54	07/24/09 07:59	406.70	406.75	0.05	0.0	OK
	07/25/09 07:45	07/25/09 07:50	0.00	0.00	0.00	0.0	07/25/09 07:54	07/25/09 07:59	406.70	406.00	-0.70	-0.1	OK
*	07/25/09 08:39	07/25/09 08:44	0.00	-0.25	-0.25	-0.0	07/25/09 08:48	07/25/09 08:53	406.70	405.25	-1.45	-0.2	OK
	07/26/09 07:45	07/26/09 07:50	0.00	0.00	0.00	0.0	07/26/09 07:54	07/26/09 07:59	406.70	404.50	-2.20	-0.4	OK
	07/27/09 07:45	07/27/09 07:50	0.00	0.00	0.00	0.0	07/27/09 07:54	07/27/09 07:59	406.70	402.00	-4.70	-0.9	OK
	07/28/09 07:45	07/28/09 07:50	0.00	-0.25	-0.25	-0.0	07/28/09 07:54	07/28/09 07:59	406.70	403.00	-3.70	-0.7	OK
*	07/28/09 08:45	07/28/09 08:50	0.00	-0.25	-0.25	-0.0	07/28/09 08:54	07/28/09 08:59	406.70	402.00	-4.70	-0.9	OK
	07/29/09 07:45	07/29/09 07:50	0.00	-0.25	-0.25	-0.0	07/29/09 07:54	07/29/09 07:59	406.70	401.75	-4.95	-0.9	OK

* Analyzer not touched

266

Date/Time Printed: 09/14/09 10:36

COVANTA HUNTINGTON

CONTINUOS EMISSIONS MONITORING SYSTEM
CYLINDER GAS AUDIT CGA DATA SHEET

UNIT No. 1
Stack

DATE : 07/07/09
START : `14:00
END : 15:00

ANALYZER or CHANNEL	NOx		O2	
MAKE	California Analytical		California Analytical	
MODEL	650		650	
SERIAL No.	W04036 NOx		W04036 O2	
RANGE	0-500 PPM		0 - 25 %	
AUDIT RANGE	LOW	HIGH	LOW	HIGH
Ca = AUDIT GAS VALUE	124.9	277.7	4.999	10.02
CYLINDER No.	SG9133814	CC210363	CC108164	CC208508
EXPIRATION DATE	04/03/10	04/03/10	04/03/11	04/02/11
GAS FLOW RATE	1.0 LPM	1.0 LPM	1.0 LPM	1.0 LPM
RUN 1	122	274.8	5	9.96
RUN 2	122.5	274	4.99	9.95
RUN 3	122.8	274.5	4.99	9.96
SUM(1+2+3)	367.3	823.3	14.98	29.87
Cm = SUM/3	122.43	274.43	4.99	9.96
ACCURACY (Cm-Ca)/Ca PCT	**-1.97%**	**-1.18%**	**-0.11%**	**-0.63%**
ACCURACY >15% ?	NO	NO	NO	NO
OOC PREVIOUS QTR ?	NO	NO	NO	NO

COMMENTS:

Audit By: Uchol
Covanta Huntington

Audit Reviewed By: Mark Ritchie
Covanta Energy

COVANTA HUNTINGTON

CONTINUOS EMISSIONS MONITORING SYSTEM
CYLINDER GAS AUDIT CGA DATA SHEET

UNIT No. 2
Stack

DATE : 07/07/09
START : 14:00
END : 15:00

ANALYZER or CHANNEL	NOx		O2	
MAKE	California Analytical		California Analytical	
MODEL	650		650	
SERIAL No.	W04037 NOx		W04037 O2	
RANGE	0-500 PPM		0 - 25 %	
AUDIT RANGE	LOW	HIGH	LOW	HIGH
Ca = AUDIT GAS VALUE	124.9	277.7	4.999	10.02
CYLINDER No.	SG9133814	CC210363	CC108164	CC208508
EXPIRATION DATE	04/03/10	04/03/10	04/03/11	04/02/11
GAS FLOW RATE	1.0 LPM	1.0 LPM	1.0 LPM	1.0 LPM
RUN 1	124	277.5	5	9.96
RUN 2	124.5	277.8	5	9.96
RUN 3	124.5	278	4.99	9.96
SUM(1+2+3)	373	833.3	14.99	29.88
Cm = SUM/3	124.33	277.77	5.00	9.96
ACCURACY (Cm-Ca)/Ca PCT	**-0.45%**	**0.02%**	**-0.05%**	**-0.60%**
ACCURACY >15% ?	NO	NO	NO	NO
OOC PREVIOUS QTR ?	NO	NO	NO	NO

COMMENTS:

Audit By: Uchol
Covanta Huntington

Audit Reviewed By: Mark Ritchie
Covanta Energy

COVANTA HUNTINGTON

CONTINUOS EMISSIONS MONITORING SYSTEM
CYLINDER GAS AUDIT CGA DATA SHEET

UNIT No. 3
Stack

DATE : 07/07/09
START : 14:00
END : 15:00

ANALYZER or CHANNEL	NOx		O2	
MAKE	California Analytical		California Analytical	
MODEL	650		650	
SERIAL No.	W04038 NOx		W04038 O2	
RANGE	0-500 PPM		0 - 25 %	
AUDIT RANGE	LOW	HIGH	LOW	HIGH
Ca = AUDIT GAS VALUE	124.9	277.7	4.999	10.02
CYLINDER No.	SG9133814	CC210363	CC108164	CC208508
EXPIRATION DATE	04/03/10	04/03/10	04/03/11	04/02/11
GAS FLOW RATE	1.0 LPM	1.0 LPM	1.0 LPM	1.0 LPM
RUN 1	123.8	277.3	4.99	9.95
RUN 2	124	277.3	4.98	9.96
RUN 3	124	277.8	4.98	9.95
SUM(1+2+3)	371.8	832.4	14.95	29.86
Cm = SUM/3	123.93	277.47	4.98	9.95
ACCURACY (Cm-Ca)/Ca PCT	**-0.77%**	**-0.08%**	**-0.31%**	**-0.67%**
ACCURACY >15% ?	NO	NO	NO	NO
OOC PREVIOUS QTR ?	NO	NO	NO	NO

COMMENTS:

Audit By: Uchol
Covanta Huntington

Audit Reviewed By: Mark Ritchie
Covanta Energy

Data Summary Report

COVANTA ENERGY

Company: Covanta Huntington, Inc.
99 Town Line Road
Northport, NY 11731

Data Group: All Data Groups
Report Name: No Title
Start of Report: 07/07/2009 14:32
End of Report: 07/07/2009 15:00

Validation: All Available Data

Group#-Channel#	G1-C5	G13-C5	G68-C5	
Long Descrip.	U-1 NOx S	U-2 Stack	U-3 Stack	
Short Descrip.	NOxs	NOxs	NOxs	
Units	ppm	ppm	ppm	
Range	0-500	0-500	0-500	
07/07/2009 14:32	120.8B	122.3B	123.0B	
07/07/2009 14:33	121.5B	123.0B	123.5B	
07/07/2009 14:34	122.0B	124.0B	123.8B	L_1
07/07/2009 14:35	133.8B	149.0B	157.0B	
07/07/2009 14:36	270.5B	275.8B	275.5B	
07/07/2009 14:37	273.8B	277.3B	277.0B	
07/07/2009 14:38	274.5B	277.5B	277.3B	
07/07/2009 14:39	274.8B	277.5B	277.3B	
07/07/2009 14:40	258.3B	248.0B	241.8B	M_1
07/07/2009 14:41	124.0B	125.8B	125.5B	
07/07/2009 14:42	123.0B	124.8B	124.3B	
07/07/2009 14:43	122.8B	124.5B	124.0B	
07/07/2009 14:44	122.5B	124.5B	124.0B	L_2
07/07/2009 14:45	139.3B	160.5B	162.5B	
07/07/2009 14:46	268.5B	276.3B	275.8B	
07/07/2009 14:47	273.0B	277.5B	277.3B	
07/07/2009 14:48	274.0B	277.8B	277.3B	M_2
07/07/2009 14:49	274.5B	278.0B	277.5B	
07/07/2009 14:50	249.5B	232.8B	231.8B	
07/07/2009 14:51	124.0B	125.5B	125.3B	
07/07/2009 14:52	123.0B	124.8B	124.3B	
07/07/2009 14:53	122.8B	124.8B	124.3B	
07/07/2009 14:54	122.8B	124.5B	124.0B	L_3
07/07/2009 14:55	144.5B	172.5B	175.0B	
07/07/2009 14:56	269.5B	277.0B	276.5B	
07/07/2009 14:57	273.3B	277.8B	277.3B	
07/07/2009 14:58	274.0B	278.0B	277.5B	
07/07/2009 14:59	274.5B	278.0B	277.8B	M_3
07/07/2009 15:00	274.5B	274.0B	277.5B	

Data Summary Report

COVANTA ENERGY

Company: Covanta Huntington, Inc.
99 Town Line Road
Northport, NY 11731

Data Group: All Data Groups
Report Name: No Title
Start of Report: 07/07/2009 14:00
End of Report: 07/07/2009 14:30

Validation: All Available Data

Group#-Channel#	G1-C17	G13-C2	G68-C11	
Long Descrip.	U-1 O2 St	U-2 Stack	U-3 Stack	
Short Descrip.	O2s	O2s	O2s	
Units	%	%	%	
Range	0-25	0-25	0-25	
07/07/2009 14:00	5.76B	8.68B	6.16B	
07/07/2009 14:01	5.03B	5.04B	5.00B	
07/07/2009 14:02	5.00B	5.00B	4.99B	L_1
07/07/2009 14:03	5.00B	5.00B	4.98B	
07/07/2009 14:04	4.99B	5.00B	4.99B	
07/07/2009 14:05	6.48B	7.04B	7.21B	
07/07/2009 14:06	9.90B	9.86B	10.24B	
07/07/2009 14:07	9.95B	9.93B	9.95B	
07/07/2009 14:08	9.96B	9.96B	9.95B	M_1
07/07/2009 14:09	9.97B	9.96B	9.96B	
07/07/2009 14:10	9.33B	8.49B	7.80B	
07/07/2009 14:11	5.04B	5.03B	4.99B	
07/07/2009 14:12	5.00B	5.00B	4.98B	
07/07/2009 14:13	4.99B	5.00B	4.98B	
07/07/2009 14:14	4.99B	5.00B	4.98B	L_2
07/07/2009 14:15	6.45B	6.88B	7.18B	
07/07/2009 14:16	9.88B	9.93B	9.93B	
07/07/2009 14:17	9.93B	9.95B	9.95B	
07/07/2009 14:18	9.94B	9.96B	9.96B	
07/07/2009 14:19	9.95B	9.96B	9.96B	M_2
07/07/2009 14:20	8.75B	8.44B	8.26B	
07/07/2009 14:21	5.03B	5.03B	5.01B	
07/07/2009 14:22	5.00B	5.00B	4.99B	
07/07/2009 14:23	4.99B	4.99B	4.98B	L_3
07/07/2009 14:24	4.99B	4.99B	4.96B	
07/07/2009 14:25	6.45B	7.24B	7.14B	
07/07/2009 14:26	9.90B	9.93B	9.93B	
07/07/2009 14:27	9.95B	9.95B	9.95B	
07/07/2009 14:28	9.95B	9.96B	9.94B	
07/07/2009 14:29	9.96B	9.96B	9.95B	M_3

COVANTA HUNTINGTON

CONTINUOS EMISSIONS MONITORING SYSTEM

CYLINDER GAS AUDIT CGA DATA SHEET

Econ O2 Unit #1, 2 & 3

DATE : 07/22/09
START : 9:00
END : 9:30

ANALYZER or CHANNEL	O2 Econ Unit #1		O2 Econ Unit #2		O2 Econ Unit #3	
MAKE	Servomex		Servomex		Servomex	
MODEL	1440		1440		1440	
SERIAL No.	01440DIVO2/3335		01440DIVO2/3337		01440DIVO2/3343	
RANGE	0 - 25 %		0 - 25 %		0-25%	
AUDIT RANGE	LOW	HIGH	LOW	HIGH	LOW	HIGH
Ca = AUDIT GAS VALUE	4.999	10.02	4.999	10.02	4.999	10.02
CYLINDER No.	CC108164	CC208508	CC108164	CC208508	CC108164	CC208508
EXPIRATION DATE	04/03/10	04/02/11	04/03/10	04/02/11	04/03/10	04/02/11
GAS FLOW RATE	1.0 LPM	1.0 LPM	1.0 LPM	1.0 LPM	1.0 LPM	1.0 LPM
RUN 1	5.04	9.99	4.94	9.89	5.05	10.06
RUN 2	5.04	9.99	4.93	9.89	5.04	10.06
RUN 3	5.03	9.99	4.93	9.89	5.04	10.06
SUM(1+2+3)	15.11	29.97	14.8	29.67	15.13	30.18
Cm = SUM/3	5.04	9.99	4.93	9.89	5.04	10.06
ACCURACY (Cm-Ca)/Ca PCT	**0.75%**	**-0.30%**	**-1.31%**	**-1.30%**	**0.89%**	**0.40%**
ACCURACY >15% ?	NO	NO	NO	NO	NO	NO
OOC PREVIOUS QTR ?	NO	NO	NO	NO	NO	NO

COMMENTS:

Audit By: Rich
Covanta Huntington

Audit Reviewed By: Mark Ritchie
Covanta Energy

272

Data Summary Report

COVANTA ENERGY

Company: Covanta Huntington, Inc.
99 Town Line Road
Northport, NY 11731

Data Group: U-1>1 Min.CEMS Data
Report Name: No Title
Start of Report: 07/22/2009 09:00
End of Report: 07/22/2009 09:30

Validation: All Available Data

Group#-Channel#	G1-C6
Long Descrip.	U-1 O2 Ec
Short Descrip.	O2e
Units	%
Range	0-25

07/22/2009 09:00	13.70B
07/22/2009 09:01	7.09B
07/22/2009 09:02	5.18B
07/22/2009 09:03	5.08B
07/22/2009 09:04	5.04B -L
07/22/2009 09:05	5.01B
07/22/2009 09:06	8.63B
07/22/2009 09:07	9.94B
07/22/2009 09:08	9.99B
07/22/2009 09:09	9.99B -H
07/22/2009 09:10	9.99B
07/22/2009 09:11	7.58B
07/22/2009 09:12	5.18B
07/22/2009 09:13	5.06B
07/22/2009 09:14	5.04B -L
07/22/2009 09:15	5.01B
07/22/2009 09:16	8.59B
07/22/2009 09:17	9.93B
07/22/2009 09:18	9.97B
07/22/2009 09:19	9.99B -H
07/22/2009 09:20	10.00B
07/22/2009 09:21	7.30B
07/22/2009 09:22	5.15B
07/22/2009 09:23	5.06B
07/22/2009 09:24	5.03B -L
07/22/2009 09:25	5.01B
07/22/2009 09:26	8.55B
07/22/2009 09:27	9.93B
07/22/2009 09:28	9.97B
07/22/2009 09:29	9.99B -H
07/22/2009 09:30	9.99B

Period Average =	7.81
Period Max Value =	13.70
Period Min Value =	5.01
Period Totals =	2.4197E+2
Period % Recovery =	100.0

Date/Time Printed: 07/22/2009 10:13

Data Summary Report

COVANTA ENERGY

Company:	Covanta Huntington, Inc. 99 Town Line Road Northport, NY 11731
Data Group:	U-2>1 Min.CEMS Data
Report Name:	No Title
Start of Report:	07/22/2009 09:00
End of Report:	07/22/2009 09:30

Validation: All Available Data

Group#-Channel#	G13-C6
Long Descrip.	U-2 Econ
Short Descrip.	O2e
Units	%
Range	0-25

07/22/2009 09:00	11.49B	
07/22/2009 09:01	5.39B	
07/22/2009 09:02	4.95B	
07/22/2009 09:03	4.93B	
07/22/2009 09:04	4.91B	
07/22/2009 09:05	4.94B	L
07/22/2009 09:06	9.53B	
07/22/2009 09:07	9.86B	
07/22/2009 09:08	9.89B	
07/22/2009 09:09	9.89B	
07/22/2009 09:10	9.89B	H
07/22/2009 09:11	5.93B	
07/22/2009 09:12	4.95B	
07/22/2009 09:13	4.93B	
07/22/2009 09:14	4.93B	
07/22/2009 09:15	4.93B	L
07/22/2009 09:16	9.48B	
07/22/2009 09:17	9.88B	
07/22/2009 09:18	9.88B	
07/22/2009 09:19	9.89B	
07/22/2009 09:20	9.89B	H
07/22/2009 09:21	5.74B	
07/22/2009 09:22	4.94B	
07/22/2009 09:23	4.93B	
07/22/2009 09:24	4.91B	
07/22/2009 09:25	4.93B	L
07/22/2009 09:26	9.46B	
07/22/2009 09:27	9.88B	
07/22/2009 09:28	9.88B	
07/22/2009 09:29	9.89B	
07/22/2009 09:30	9.89B	H

Period Average =	7.57
Period Max Value =	11.49
Period Min Value =	4.91
Period Totals =	2.3481E+2
Period % Recovery =	100.0

Date/Time Printed: 07/22/2009 10:23

Data Summary Report

COVANTA ENERGY

Company: Covanta Huntington, Inc.
99 Town Line Road
Northport, NY 11731

Data Group: U-3>1 Min.CEMS Data
Report Name: No Title
Start of Report: 07/22/2009 09:00
End of Report: 07/22/2009 09:30

Validation: All Available Data

Group#-Channel#	G68-C6
Long Descrip.	U-3 Econ
Short Descrip.	O2e
Units	%
Range	0-25

07/22/2009 09:00	17.35B	
07/22/2009 09:01	5.39B	
07/22/2009 09:02	5.09B	
07/22/2009 09:03	5.06B	
07/22/2009 09:04	5.05B	L
07/22/2009 09:05	5.29B	
07/22/2009 09:06	9.88B	
07/22/2009 09:07	10.05B	
07/22/2009 09:08	10.06B	
07/22/2009 09:09	10.06B	H
07/22/2009 09:10	10.08B	
07/22/2009 09:11	5.64B	
07/22/2009 09:12	5.08B	
07/22/2009 09:13	5.04B	
07/22/2009 09:14	5.04B	L
07/22/2009 09:15	5.25B	
07/22/2009 09:16	9.86B	
07/22/2009 09:17	10.05B	
07/22/2009 09:18	10.05B	
07/22/2009 09:19	10.06B	H
07/22/2009 09:20	10.06B	
07/22/2009 09:21	5.44B	
07/22/2009 09:22	5.06B	
07/22/2009 09:23	5.04B	
07/22/2009 09:24	5.04B	L
07/22/2009 09:25	5.16B	
07/22/2009 09:26	9.84B	
07/22/2009 09:27	10.05B	
07/22/2009 09:28	10.06B	
07/22/2009 09:29	10.06B	H
07/22/2009 09:30	10.06B	

Period Average =	7.91
Period Max Value =	17.35
Period Min Value =	5.04
Period Totals =	2.4530E+2
Period % Recovery =	100.0

Date/Time Printed: 07/22/2009 10:24

Airgas

Airgas Specialty Gases
690 Union Landing Road
Riverton, NJ 08077
(856) 829-7870
Fax (856) 829-0571
www.airgas.com

CERTIFICATE OF ANALYSIS
Grade of Product: EPA Protocol

Part Number:	E04NI77E15A3419	Reference Number:	82-124130889-1
Cylinder Number:	CC208508	Cylinder Volume:	152 Cu.Ft.
Laboratory:	ASG - Riverton - NJ	Cylinder Pressure:	2015 PSIG
Analysis Date:	Apr 02, 2008	Valve Outlet:	590

Expiration Date: Apr 02, 2011

Certification performed in accordance with "EPA Traceability Protocol (Sept. 1997)" using the assay procedures listed. Analytical Methodology does not require correction for analytical interferences. This cylinder has a total analytical uncertainty as stated below with a confidence level of 95%. There are no significant impurities which affect the use of this calibration mixture. All concentrations are on a volume/volume basis unless otherwise noted.
Do Not Use This Cylinder below 150 psig/i.e. 1 Mega Pascal

ANALYTICAL RESULTS

Component	Requested Concentration	Actual Concentration	Protocol Method	Total Relative Uncertainty
CARBON MONOXIDE	110.0 PPM	107.6 PPM	G1	+/- 1% NIST Traceable
OXYGEN	10.00 %	10.02 %	G1	+/- 1% NIST Traceable
CARBON DIOXIDE	12.00 %	12.07 %	G1	+/- 1% NIST Traceable
NITROGEN	Balance			

CALIBRATION STANDARDS

Type	Lot ID	Cylinder No	Concentration	Expiration Date
NTRM	98060826	CC66865	98.0PPM CARBON MONOXIDE/NITROGEN	May 01, 2008
NTRMplus	97060807	SG9165224BAL	7.029% CARBON DIOXIDE/NITROGEN	May 01, 2010
NTRM	03060203	XC024381B	22.60% OXYGEN/NITROGEN	Jul 01, 2011

ANALYTICAL EQUIPMENT

Instrument/Make/Model	Analytical Principle	Last Multipoint Calibration
Siemens Ultramat 6E N1-N0-0820	NDIR	Mar 18, 2008
Siemens Ultramat 6 N9-762	NDIR	Mar 26, 2008
Siemens 5E BN605	Paramagnetic	Mar 05, 2008

Triad Data Available Upon Request

Notes:

QA Approval

#5000

Airgas

Airgas Specialty Gases
600 Union Landing Road
Riverton, NJ 08077
(856) 829-7876
Fax (856) 829-0571
www.airgas.com

CERTIFICATE OF ANALYSIS
Grade of Product: EPA Protocol

Part Number:	E04NI88E15A3420	Reference Number:	82-124130894-1
Cylinder Number:	CC108164	Cylinder Volume:	148 Cu.Ft.
Laboratory:	ASG - Riverton - NJ	Cylinder Pressure:	2015 PSIG
Analysis Date:	Apr 03, 2008	Valve Outlet:	350

Expiration Date: Apr 03, 2011

Certification performed in accordance with "EPA Traceability Protocol (Sept. 1997)" using the assay procedures listed. Analytical Methodology does not require correction for analytical interferences. This cylinder has a total analytical uncertainty as stated below with a confidence level of 95%. There are no significant impurities which affect the use of this calibration mixture. All concentrations are on a volume/volume basis unless otherwise noted.
Do Not Use This Cylinder below 150 psig.i.e. 1 Mega Pascal

ANALYTICAL RESULTS

Component	Requested Concentration	Actual Concentration	Protocol Method	Total Relative Uncertainty
CARBON MONOXIDE	50.00 PPM	49.35 PPM	G1	+/- 1% NIST Traceable
OXYGEN	5.000 %	4.999 %	G1	+/- 1% NIST Traceable
CARBON DIOXIDE	5.000 %	5.990 %	G1	+/- 1% NIST Traceable
NITROGEN	Balance			

CALIBRATION STANDARDS

Type	Lot ID	Cylinder No	Concentration	Expiration Date
NTRMplus	98051206	SG9161143BAL	7.015% OXYGEN/NITROGEN	Jun 01, 2009
NTRMplus	97050607	SG9165224BAL	7.029% CARBON DIOXIDE/NITROGEN	May 01, 2010
NTRM	98060216	XC012122B	49.59PPM CARBON MONOXIDE/NITROGEN	Jul 05, 2010

ANALYTICAL EQUIPMENT

Instrument/Make/Model	Analytical Principle	Last Multipoint Calibration
Siemens Ultramat 6E N1-N0-0820	NDIR	Mar 18, 2008
Siemens 6E Ultramat L9-0191	NDIR	Mar 03, 2008
Siemens 5E BN805	Paramagnetic	Mar 05, 2008

Triad Data Available Upon Request

Notes:

QA Approval

#5000

Airgas

Airgas Specialty Gases
600 Union Landing Road
Riverton, NJ 08077
(856) 829-7878
Fax (856) 829-0571
www.airgas.com

CERTIFICATE OF ANALYSIS
Grade of Product: EPA Protocol

Part Number:	E04NI99E15A0674	Reference Number:	82-124130887-1
Cylinder Number:	SG9133814	Cylinder Volume:	144 Cu.Ft.
Laboratory:	ASG - Riverton - NJ	Cylinder Pressure:	2015 PSIG
Analysis Date:	Apr 03, 2008	Valve Outlet:	660

Expiration Date: Apr 03, 2010

Certification performed in accordance with "EPA Traceability Protocol (Sept. 1997)" using the assay procedures listed. Analytical Methodology does not require correction for analytical interferences. This cylinder has a total analytical uncertainty as stated below with a confidence level of 95%. There are no significant impurities which affect the use of this calibration mixture. All concentrations are on a volume/volume basis unless otherwise noted.
Do Not Use This Cylinder below 150 psig.i.e. 1 Mega Pascal

ANALYTICAL RESULTS

Component	Requested Concentration	Actual Concentration	Protocol Method	Total Relative Uncertainity
SULFUR DIOXIDE	50.00 PPM	50.00 PPM	G1	+/- 1% NIST Traceable
NITRIC OXIDE	125.0 PPM	124.9 PPM	G1	+/- 1% NIST Traceable
CARBON MONOXIDE	500.0 PPM	502.3 PPM	G1	+/- 1% NIST Traceable
NITROGEN	Balance			

Total oxides of nitrogen 125.0 PPM For Reference Only

CALIBRATION STANDARDS

Type	Lot ID	Cylinder No	Concentration	Expiration Date
NTRM	80060704	CC207598	45.91PPM SULFUR DIOXIDE/NITROGEN	Sep 01, 2010
NTRM	86061117B	CC208175	93.2PPM NITRIC OXIDE/NITROGEN	Jan 01, 2010
NTRM	98050516	SG9168766BAL	488.7PPM CARBON MONOXIDE/NITROGEN	Jun 01, 2009

ANALYTICAL EQUIPMENT

Instrument/Make/Model	Analytical Principle	Last Multipoint Calibration
Siemens 6E Ultramat L9-0191	NDIR	Mar 03, 2008
Nicolet 560 ADU9800406 NO/N2	FTIR	Mar 04, 2008
Nicolet 560 ADU9800405 SO2	FTIR	Mar 04, 2008

Triad Data Available Upon Request

Notes:

QA Approval

#5000

Airgas

Airgas Specialty Gases
600 Union Landing Road
Riverton, NJ 08077
(856) 829-7870
Fax (856) 829-0371
www.airgas.com

CERTIFICATE OF ANALYSIS
Grade of Product: EPA Protocol

Part Number:	E04NI99E15A0356	Reference Number:	82-124130886-1
Cylinder Number:	CC210363	Cylinder Volume:	144 Cu.Ft.
Laboratory:	ASG - Riverton - NJ	Cylinder Pressure:	2015 PSIG
Analysis Date:	Apr 03, 2008	Valve Outlet:	660

Expiration Date: Apr 03, 2010

Certification performed in accordance with "EPA Traceability Protocol (Sept. 1997)" using the assay procedures listed. Analytical Methodology does not require correction for analytical interferences. This cylinder has a total analytical uncertainty as stated below with a confidence level of 95%. There are no significant impurities which affect the use of this calibration mixture. All concentrations are on a volume/volume basis unless otherwise noted.
Do Not Use This Cylinder below 150 psig.i.e. 1 Mega Pascal

ANALYTICAL RESULTS

Component	Requested Concentration	Actual Concentration	Protocol Method	Total Relative Uncertainty
SULFUR DIOXIDE	110.0 PPM	108.0 PPM	G1	+/- 1% NIST Traceable
NITRIC OXIDE	275.0 PPM	277.7 PPM	G1	+/- 1% NIST Traceable
CARBON MONOXIDE	1100 PPM	1101 PPM	G1	+/- 1% NIST Traceable
NITROGEN	Balance			

Total oxides of nitrogen 277.5 PPM For Reference Only

CALIBRATION STANDARDS

Type	Lot ID	Cylinder No	Concentration	Expiration Date
NTRM	06060257	CC207846	257.0PPM NITRIC OXIDE/NITROGEN	Jan 01, 2010
NTRMplus	00062411	SG9183247BAL	973.6PPM CARBON MONOXIDE/NITROGEN	Jun 01, 2009
NTRM	04060312	XC017367B	98.0PPM SULFUR DIOXIDE/NITROGEN	Apr 02, 2008
NTRM	00060704	XC017367B	98.0PPM SULFUR DIOXIDE/NITROGEN	Apr 04, 2008

ANALYTICAL EQUIPMENT

Instrument/Make/Model	Analytical Principle	Last Multipoint Calibration
Siemens 6E Ultramat L9-0191	NDIR	Mar 03, 2008
Nicolet 560 ADUB800406 NO/N2	FTIR	Mar 04, 2008
Nicolet 560 ADUB800406 SO2	FTIR	Mar 04, 2008

Triad Data Available Upon Request

Notes:

QA Approval

#5000