FACT SHEET

NPDES Permit Number: WA-000206-2
Public Notice Date:
Public Notice Expiration Date:
Technical Contact: Susan Poulsom 206 553-6258 or
1-800-424-4372 (within Region 10)
poulsom.susan@epa.gov

The U.S. Environmental Protection Agency (EPA) Proposes to Reissue a Wastewater Discharge Permit to:

Puget Sound Naval Shipyard
Bremerton, Washington 98314

and requests the state of Washington to certify this NPDES permit

EPA Proposes NPDES Permit Reissuance
EPA proposes to reissue a National Pollutant Discharge Elimination System (NPDES) permit to the Bremerton Naval Complex. The draft permit sets conditions on the discharge of pollutants from Bremerton Naval Complex to Sinclair Inlet. In order to ensure protection of water quality and human health, the permit places limits on the types and amounts of pollutants that can be discharged.

This fact sheet includes:

- information on public comment, public hearing, and appeal procedures
- a description of the current and proposed discharge
- a listing of past and proposed effluent limitations and other conditions
- a map and description of the discharge location
- detailed background information supporting the conditions in the draft permit

The State of Washington Certification.
EPA is requesting that the Washington Department of Ecology certify the NPDES permit for the Puget Sound Naval Shipyard, under section 401 of the Clean Water Act (CWA).

Public Comment
The EPA will consider all substantive comments before reissuing the final permit. Those wishing to comment on the draft permit or request a public hearing may do so in writing by the

expiration date of the Public Notice. All comments should include name, address, phone number, a concise statement of basis of comment and relevant facts upon which it is based. A request for public hearing must state the nature of the issues to be raised as well as the requester's name, address and telephone number. All written comments should be addressed to the Office of Water and Watersheds Director at U.S. EPA, Region 10, 1200 6th Avenue, Suite 900, OWW-130, Seattle, WA 98101; submitted by facsimile to (206) 553-0165; or submitted via e-mail at poulsom.susan@epa.gov.

After the Public Notice expires and all significant comments have been considered, EPA's Regional Director for the Office of Water and Watersheds will make a final decision regarding permit reissuance. If no comments requesting a change in the draft permit are received, the tentative conditions in the draft permit will become final, and the permit will become effective upon issuance. If significant comments are received, the EPA will address the comments and reissue the permit along with a response to comments. The permit will become effective 33 days after the issuance date, unless a request for an evidentiary hearing is submitted within 33 days.

Documents are Available for Review

The draft NPDES permit and related documents can be reviewed or obtained by visiting or contacting EPA's Regional Office in Seattle between 8:30 a.m. and 4:00 p.m., Monday through Friday (See address below).

United States Environmental Protection Agency
Region 10
1200 Sixth Avenue
Suite 900
OWW-130
Seattle, Washington 98101
(206) 553-0523 or
1-800-424-4372 (within Alaska, Idaho, Oregon and Washington)

The fact sheet and draft permit are also available at:

EPA Washington Operations Office
300 Desmond Drive SE
Lacey, WA 98503
360 753-9080

Washington Department of Ecology
300 Desmond Drive SE
Lacey, WA 98503
360 407-6275

TABLE OF CONTENTS

page

I. APPLICANT 6

II. INTRODUCTION 6

III. FACILITY DESCRIPTION 7

A. Dry Docks 7
Activity 7
Dry Dock Processes Producing Pollutants 8
Wastestreams Discharging to Dry Dock Outfalls 9
Volumes of Wastewater Discharged from Dry Dock Outfalls 13
Pollutants Present 15
Dry Dock Floor Drainage System 17
Dry Dock Outfalls 18
B. Stream Generation Plant and miscellaneous industrial waste 20
Activity and Wastestreams 20
Pollutants Present 22
Steam Generation Plant Outfall 22
C. Stormwater 23
Infrastructure 23
Condition of the Storm sewer system - Storm sewer system Restoration Work 23
Stormwater Basins 24
Potential Sources of Stormwater Pollutants 27
Pollutants Present 31
Treatment 33
D. Wastestreams generated at PSNS not covered by this permit 33

IV. PERMIT BACKGROUND 34

A. Summary of 1994 Permit conditions 34
Effluent Limitations and Monitoring 34
Other Permit Conditions 36
Compliance with Effluent Limits 37
B. Project XL (ENVVEST) 37

V. RECEIVING WATER 38

A. Beneficial Uses and Water Quality Criteria 38
B. 303(D) Listings for Sinclair Inlet 39
C. Mixing Zones 39

VI. EFFLUENT LIMITATIONS 40

VII. MONITORING REQUIREMENTS 42

A. Effluent Monitoring 43
Dry docks 43
Dry dock Floor Drainage (Process Water Control System) 44
Whole Effluent Toxicity Testing 45
Steam Generation Plant 45
Storm Water 46

VIII. OTHER ELEMENTS OF THE PERMIT 48

A. Best Management Practices 48
B. Stormwater Pollution Prevention Plan (SWPPP) 48
C. AKART Study 49
D. Compliance Schedule 49

IX. OTHER LEGAL REQUIREMENTS 50

A. Endangered Species Act 50
B. Essential Fish Habitat 51
C. State/Tribal Certification 51

X. REFERENCES 51

List of Tables

Table 1: Dry Dock Dimensions 7
Table 2: Dry Dock Volumes and Dewatering Rates 12
Table 3: Volume of Caisson Ballast Water 12
Table 4: Average Annual Wastewater Volumes Discharged to Surface Water From Dry Dock Activity (in mgd) 13
Table 5: Dry Dock Stormwater Volumes Associated with a 1-inch Rainfall Event 14
Table 6: Dry Dock Discharge Pumps 14
Table 7: Pollutants Present at Dry Dock Outfalls 15
Table 8: Dry Dock Outfalls 18
Table 9: Wastestreams Treated at Steam Generation Plant Treatment Facility 21
Table 10: Pollutants in Outfall 021 (From Steam Generation Plant) 22
Table 11: Steam Generation Plant Outfall 021 22
Table 12: Stormwater Outfalls Draining Greater Than 5,000 Square Feet 24
Table 13: Stormwater Outfalls of Concern 28
Table 14: Pollutants Presents in Stormwater – Maximum Detected Concentration (µg/L unless noted) 32
Table 15: Effluent Limits in 1994 Permit 35
Table 16: Monitoring Requirements in 1994 Permit 36
Table 17: Mixing Zones Provided in 1994 Permit 37
Table 18: Dry Dock Effluent Limit Violations for Copper 37
Table 19: Dry Docks 1 – 5 (Outfalls 018A, 018B, 096, AAA, and BBB) Effluent Limits 40

Table 20: Dry Dock 6 (Outfall 019) Effluent Limits 41
Table 21: Steam Generation Plant Effluent Limits 42
Table 22: Stormwater Final Effluent Limitations 42
Table 22: Dry Dock Outfalls Monitoring Requirements (Outfalls 018A, 018B, 096, AAA, BBB and 019) 43
Table 23: Dry Dock Floor Drainage (Process Water Control System) Monitoring Requirements 44
Table 6: Steam Generation Plant Effluent Monitoring 46
Table 24: Stormwater Monitoring Requirements 46
Table 25: Benchmark Values 48

List of Figures

Figure 1 PSNS Map and Location 53
Figure 2 Wastestreams to Dry Dock 54
Figure 3 Diagram of Dry Dock Drainage System 55
Figure 4 Wastestreams to Dry Dock Outfalls 56
Figure 5 Copper Concentrations in Stormwater 57

List of Appendices

Appendix A - Figures 53
Appendix B - List of Acronyms 58
Appendix C - Development Of Effluent Limitations 60
Appendix D - Example Water Quality-Based Effluent Limits Calculation 74
Appendix E - Endangered Species Act 78

I. APPLICANT

United States Department of Defense
Department of Navy
Puget Sound Naval Shipyard

Facility Mailing Address:
1400 Farragut Avenue
Bremerton, Washington 98314

Facility Contact:
Mr. Steve Rupp, Head, Environmental Division, Code 106.3

II. INTRODUCTION

The Puget Sound Naval Shipyard (PSNS) is part of the Bremerton Naval Complex, located along the northern shore of Sinclair Inlet on Puget Sound and bounded by the City of Bremerton. The Navy has owned and operated facilities at this location since 1891.

The Bremerton Naval Complex is made up of two distinct areas, the PSNS and the Naval Station Bremerton. The PSNS is the industrial area. It includes the dry docks, machine shops, warehouses, equipment maintenance, steam plant, etc. The Naval Station Bremerton makes up the support areas, including housing, parking, shopping, entertainment, and recreation areas. The entire site covers approximately 350 acres of land and an additional 340 acres of tidelands along 11,000 feet of shoreline. The complex contains over 300 buildings and structures, 6 deep water piers, 6 dry docks, and numerous moorings. (Source: Superfund NPL Assessment Program (SNAP) Database). Figure 1 *PSNS Map and Location* in Appendix A shows a map of the facility.

The PSNS repairs, overhauls, converts, refurbishes and refuels navy vessels and breaks up (cuts up and recycles) ships and submarines, including those with nuclear-powered propulsion systems that have reached the end of their useful life.

Discharges to receiving waters from the PSNS come from dry dock operations, stormwater runoff and treated wastewater from the steam generation plant. Discharges from the Bremerton Naval Complex include stormwater. This NPDES permit covers only discharges from the PSNS. Authorization from the support areas will be addressed under a separate permitting activity (either coverage under a general permit or issuance of an individual permit).

The PSNS generates several wastestreams that are discharged to the City of Bremerton Publicly Owned Treatment Works (POTW). Some of these wastesteams are pretreated at on-site treatment facilities; others are discharged directly to the sanitary sewer system. The discharge of

wastestreams to the Bremerton POTW is authorized under State Waste Discharge Permit No. ST-7374 (Ecology, 2003).

III. FACILITY DESCRIPTION

A. DRY DOCKS

ACTIVITY

The PSNS has six large graving dry docks. Vessels are moved into the dry dock through the following sequence of events:

1. Water is allowed to fill up the dry dock
2. The gate or "caisson" is floated and moved aside
3. The vessel is moved into the dry dock
4. The caisson is closed.
5. Water is pumped out of the dry dock into Sinclair Inlet
6. The vessel is left supported on blocks in the dry dock.

Under the normal operating mode, the caisson is in place and there is no water in the dry dock. A ship is "parked" in the dry dock and ship activities (repair, rehabilitation, decommissioning etc.) are underway. When there is no activity underway in a dry dock, the dry dock will be maintained in normal operating mode, i.e. the caisson is in place and there is no water in the dry dock.

Physical dimensions of the PSNS dry docks are summarized in *Table 1: Dry Dock Dimensions*.

Table 1: Dry Dock Dimensions

Dry Dock	Length x Width x Height	Volume (million gallons)
1	640' x 110' x 40'	14
2	870' x 150' x 40'	29
3	930' x 120' x 30'	23
4	1,000' x 150' x 50'	51
5	1,030' x 150' x 50'	51
6	1,150' x 180' x 50'	88

Notes:
1. Dimensions are approximate, to the nearest 10 feet. Width is the top width. Volume is at high tide.

Another occasional dry dock practice is to leave the dry dock partially flooded for one to five days before vessel movement. This occurs only at dry dock 6. The caisson remains in-place and the dry dock is partially filled with Sinclair Inlet water. The PSNS conducts vessel operational tests which would otherwise be conducted pier side. This allows the Navy to minimize the potential of petroleum spills during fueling operations. During this period, drainage pumps are used to expel Sinclair Inlet water that enters through the isolation valves. Keeping a ship in a partially flooded dock for more than a day is rare, occurring a few times over the past five years.

DRY DOCK PROCESSES PRODUCING POLLUTANTS

Processes which occur within the dry docks that have the greatest potential to contribute pollutants to the dry dock wastestreams are summarized below:

PRESSURE WASHING/HYDROBLASTING

The PSNS uses high and ultra-high pressure washing to remove marine growth and paint. The hydroblast-water contains high levels of heavy metals from the removed paint. Many of the paint coatings used on hulls contain “anti-fouling” heavy metals, such as copper and zinc. Potential pollutant sources include spills of the removed paint and water mixture, drips, and system equipment failure. The ultra-high pressure units have integral wastewater recovery and treatment systems. Once treated, the water is reused. For systems without integral wastewater recovery capability, the hydroblast water is sent to the Bremerton POTW. The permit prohibits the discharge of hydroblast water.

DRY ABRASIVE BLASTING

Blasting with dry, abrasive grit may be used to remove paint. Spent grit contains significantly elevated levels of metals because it is commingled with paint chips and associated metals dislodged from hull and other surfaces during blasting. During blasting the grit accumulates within the containment, on the floor of the dry dock. Containment failure, inadequate cleanup, and equipment failure are all potential sources of pollutant. If not adequately controlled, the grit and associated contaminates can be carried by runoff into the drainage system.

SPILLS

Spills can occur from ships' systems (sewage, bilge water, oil, system flushes, solvents, fire fighting agents, etc.), hazardous materials (paints, thinners, fuels, etc.) stored and used in a dry dock, equipment failures, and hazardous wastes.

WELDING, BURNING, CUTTING AND GRINDING

The PSNS cuts up and disposes and/or recycles Navy vessel hulls and copper-nickel alloy piping. The process generates slag and metal particles. If not properly and adequately cleaned up, these materials could be washed into the dry dock drainage and stormwater.

PAINTING OPERATIONS

During out-of-door spray operations, over-spray can be a source of pollutants. Over-spray is the portion of the coating that is sprayed from the spray gun, but for various reasons, does not stick to the substrate being coating. Over-spray consists of small and fine coating droplets that can travel before being deposited onto the ground and other surfaces.

WASTESTREAMS DISCHARGING TO DRY DOCK OUTFALLS

There are several sources of wastestreams that discharge to the dry dock outfalls. These include dry dock floor drainage (water that comes into contact with the dry dock walls and floor including stormwater) ship cooling water, and groundwater infiltration. A diagram showing the dry dock wastestreams is presented in Figure 2: *Wastestreams to Dry Dock* in Appendix A. A diagram of the dry dock drainage is presented in Figure 3: *Diagram of Dry Dock Drainage System* in Appendix A. Many wastestreams generated within the dry docks are not covered under this permit and are prohibited from discharge under the NPDES permit. These wastestreams are diverted to the POTW and are regulated under the State Waste Discharge Permit.

DRY DOCK FLOOR DRAINAGE

Dry dock floor drainage consists of waters that contact the dry dock floor, coming into contact with pollutants on the dry dock floor, then flow to the dry dock drainage system. Some of these wastestreams are permitted to discharge through the dry dock outfalls through the NPDES permit. Individual wastestreams that comprise the dry dock drainage include:

Stormwater

Stormwater which falls on the dry dock floor comes into contact with pollutants from the industrial process. Stormwater runoff from the dry dock floor is the highest contributor to metal concentrations in the dry dock discharges.

Leakage from Caisson, Dry Dock Floor or Walls

When the dry docks are under normal operation, water from Sinclair Inlet leaks through the caissons and the dry dock floors and walls.

Steam Condensate

The PSNS has an on-site stream generation plant. The PSNS uses additives to control stream generator chemistry and prevent corrosion in the steam and condensate lines. Three chemicals that may be added are: ChemTreat BL-1283, BL-1544, and BL-1752.

After leaving the steam generation plant, the steam enters a pressure distribution system and is provided to buildings, moored ships, and barges. Moored ships use the shore steam to operate auxiliary systems (such as heating). In the process of supplying steam, the steam cools and most of the steam condenses into water. This condensed water is known as condensate.

The PSNS does not have condensate return lines from ships moored at the piers or from barges; the steam is discharged directly to Sinclair Inlet. The discharge of condensate from moored ships is not covered under this permit; but instead is covered under Uniform National Discharge Standards (UNDS) for armed forces vessels. Within the PSNS, the condensate is either discharged or is returned to the steam plant. There are no designated traps where the condensate is released. Condensate lost within the PSNS is discharged either to the dry docks, stormwater outfalls, or to the sewer. The amount discharged to each of these locations is unknown. On the NPDES application, the flow of steam condensate discharged through the dry dock outfalls was estimated to be 60 gallons per minute (gpm).

All condensate from processes such as steam-cleaning or used to power equipment is sent to the sewer. The permit prohibits the discharge of the condensate from steam-cleaning, or used to power equipment.

Noncontact cooling water for equipment
The PSNS operates small equipment such air compressors. Potable water and salt water, withdrawn directly from Sinclair Inlet, is used for non-contact cooling water for the equipment. This is a single-pass cooling for heat exchangers on coolers and compressors. Outside of the dry dock, the non-contact cooling water is discharged directly to stormwater outfalls.

Miscellaneous Dry Dock Drainage
- Freeze protection water – A bleeder assembly is used to prevent water systems from freezing. Water hoses are left on to prevent freezing, the water is discharged through the dry dock drainage system. The approximate flow is 5 to 20 gpm per dock continuous during the winter. The permit prohibits the discharge of freeze protection water that contacts the dry dock floor.
- Eye wash station
- Water piping leaks
- Fire Watch - Fire watchers use hoses during welding/cutting operations to cool the cut lines.

DRY DOCK WASTESTREAMS THAT DO NOT CONTACT THE DRY DOCK FLOOR

Hydrostatic Relief Water
Most of the volume of water discharged from the dry dock outfalls is hydrostatic relief water (an estimated 2 to 4 millions gallons per day (mgd)). The hydrostatic relief water is ground water that drains into tunnels that are located below the dry dock floor. The water enters the tunnels through drain tiles that run underneath and around the circumference of the dry dock floors. The water from these drainage tunnels flows to the dry dock drainage system. The flow from the hydrostatic relief water is fairly constant within a dry dock.

Noncontact cooling water from vessels in the dry docks
Ships undergoing overhaul must maintain seawater cooling. This cooling water is used to provide air conditioning and cool equipment. When ships are moored at the piers, cooling water

is pumped from the bay through heat exchangers and discharged back to the bay. Cooling water to the moored ships is regulated under the UNDS, and is not a part of the NPDES permit. While the ship is dry-docked, cooling water is supplied to the ship by the PSNS's saltwater fire main. Cooling water from ships in the dry docks is discharged through the dry dock outfalls under the NPDES permit. Non-contact vessel cooling water can vary between 0.5 to 4 mgd for an active vessel. This cooling water does not contact the dry dock floor; the PSNS installs temporary hoses from the ship's discharge to direct the water to the dry dock drainage tunnels where it combines with the hydrostatic relief water. This cooling water becomes part of the drainage discharges from outfalls 018, 018A, 096, and 019.

Building 880 Foundation Drainage

Building 880 is equipped with a large below-ground storage tank. Although the tank was designed to store used nuclear fuel, it has never been used for this purpose. The design of the tank included suppression of the water table by pumping water from wells located around the building. The water is pumped using variable speed pumps operating between 50 – 200 gpm. The water is discharged through dry dock 5 outfall.

Cooling Water Building 431

A salt water cooling system supports both a pump/valve test facility and a test steam generator (boiler system) in building 431. The cooling water is discharged to the dry dock drainage system near the southwest end of dry dock 2. The estimated usage/discharge for the pump/valve test facility is 0.086 mgd. The test steam generator cooling system was design for a usage of 4,000 gpm; the system has not been used since its original installation. The Navy estimates that the maximum differential in temperature for the pump/valve wastestream is 10 degrees Fahrenheit (°F) (5.6 degrees Celsius (°C)).

OTHER DRY DOCK WASTESTREAMS

Dock De-flooding Water

After the docking and undocking process, water from Sinclair Inlet is pumped from the flooded dry dock back into Sinclair Inlet. The dry dock dewatering system is a separate drainage system with its own pumps and outfalls. Volumes associated with the system are summarized in Table 2*: Dry Dock Volumes and Dewatering Rates*. The dry dock de-flooding water is not monitored under the permit. The permit includes Best Management Practices (BMP) requirements as part of the dry dock flooding process.

Table 2: Dry Dock Volumes and Dewatering Rates				
Dry Dock	**Water Volume (million gallons)[1]**	**Pump Discharge Rate (gpm per pump)**	**Number of Pumps**	**Outfall No.**
1	13.8	--[2]	--	???
2	29.1	80,000	3	???
3	22.6	--[2]	--	???
4	51.2	130,000	3	???
5	51.2	130,000	3	???
6	88.0	114,000	4	???
1 Water volume at mean high tide. 2 Dry docks 1 and 3 are dewatered by Pumpwell 2				

Partially Flooded Dry Dock Discharge

During partially flooded dry dock conditions, drainage pumps are used to expel Sinclair Inlet water that enters through the pump well sump. The outfalls through which the water is discharged are the same as those listed under dewatering. The outfalls from the partially flooded discharge are not monitored.

Caisson Ballast Water

During the docking/undocking operation, the caisson is moved by pumping Sinclair Inlet water from the caisson boxes attached to the gate until the caisson floats. Once the caisson floats, it is pushed aside. The caisson ballast water is discharged twice during each flooding event, once to move the gate after flooding, then to close the gates. The maximum volume of the caisson water for each of the dry docks is summarized in *Table 3: Volume of Caisson Ballast Water*. The ballast water does not flow through the dry dock outfalls. The caisson ballast water is not monitored.

Table 3: Volume of Caisson Ballast Water	
Dry Dock	**Volume of Water (gallons)**
1	187,000
2	240,000
3	210,000
4	517,000
5	540,000
6	645,700

PROHIBITED WASTESTREAMS

There are several wastestreams generated within the dry docks that are not covered under this permit and are prohibited from discharge under the NPDES permit. These wastestreams are

diverted to the POTW and are regulated under the State Waste Discharge Permit. These include: pressure washwater, hydroblast water, washdown water, bilge water, sanitary wastes, condensate from steam-cleaning and from powering of equipment, freeze protection water that contacts the dry dock floor, contaminated storm water that exceeds water quality standards, hydraulic fluid, oily wastes, gray water, solvents, and ballast water while a ship is in the dry dock.

VOLUMES OF WASTEWATER DISCHARGED FROM DRY DOCK OUTFALLS

The volume of wastewater discharged as part of the dry dock activity is summarized in *Table 4: Average Annual Wastewater Volumes Discharged to Surface Water From Dry Dock Activity (in mgd)* and graphically represented in Figure 2: *Wastestreams to Dry Dock* (see Appendix A), which illustrates that most of the flow through the dry dock outfalls is from the hydrostatic relief water (groundwater) and non-contact cooling water from vessels in the dry docks.

Table 4: Average Annual Wastewater Volumes Discharged to Surface Water From Dry Dock Activity (in mgd)

Source	Total Volume	Outfall 018A, 018B, 096	Outfall 019
Stormwater	0.07	0.052	0.018
Miscellaneous dry dock drainage	0.212	0.14	0.072
Caisson Floor Leakage	Not measured	Not measured	Not measured
Steam condensate	0.0864	0.0576	0.0288
Hydrostatic relief water	6.027	2.02	4.007
Non-contact cooling water for vessels in the dry dock	2.60	0.83	1.77
Building 880 Foundation drainage	Not measured	Not measured	Not measured

The volume of stormwater within the dry docks associated with a one-inch rainfall event is provided in *Table 5: Dry Dock Stormwater Volumes Associated with a 1-inch Rainfall Event*.

Table 5: Dry Dock Stormwater Volumes Associated with a 1-inch Rainfall Event	
Dry Dock	**Volume (gallons/inch)[1]**
1	43,883
2	81,345
3	69,564
4	93,500
5	96,305
6	129,030
1. Based on the dry dock dimensions at the top of the dry dock.	

Pump information for each of the dry dock outfalls is provided in *Table 6: Dry Dock Discharge Pumps*.

Table 6: Dry Dock Discharge Pumps			
Outfall	**Pumpwell**	**Pump**	**Rating (gpm)**
018	PW4	1	7,614
		2	8,401
018A	PW5	1	6,671
		2	7,039
AAA	PW3	1	3,500
		2	3,500
BBB	PW3A	1	3,500
		2	3,500
096	PW2	5	7,167
		6	7,167
019	PW6	1, 2, and 3	14,745
Notes: Drainage pumps at outfalls 018 A and 018B run for one hour out of every three to four. Outfall 019 pumps normally run 10 minutes out of each 30. Frequency of pump operation varies depending on flow of cooling water being discharged. gpm = gallons per minute			

POLLUTANTS PRESENT

Pollutants present in discharge from the dry dock outfalls are summarized in *Table 7: Pollutants Present at Dry Dock Outfalls*. The table identifies maximum concentrations of detected toxic substances, pollutants for which there were no detected concentrations, but which the Navy believes are present in the discharge, and concentrations of conventional pollutants in the discharge.

Table 7: Pollutants Present at Dry Dock Outfalls

Parameters	Maximum Daily Concentrations (µg/L unless noted)	
	Outfalls 018A, 018B, 096	Outfall 019
Biological Oxygen Demand (BOD_5), mg/L	nd 5.0	nd 5.0[1]
Chemical Oxygen Demand (COD), mg/L	760	580
Total Organic Carbon (TOC), mg/L	6.2	1.9
Total Suspended Solids (TSS), mg/L	11	nd 4.0
pH, std. units	7.6[11]	7.7[11]
Oil and Grease, mg/L	nd[2]	Nd
Temperature	64.8 °F (18.2 °C)	62.1 °F (16.7°C)
Ammonia, mg/L	0.69	0.38
Aluminum	139	174
Barium	48.3	61
Iron	967	102
Magnesium	604,000	785,000
Manganese	297	410
Arsenic	3.4	1.8
Copper	680	190
Lead	17	4
Mercury	0.46	0.4
Zinc	48	49
Bromoform	0.4	believed absent[3], nd
Chloroform	2.4	dry dock floor drainage[4]
Dichlorobromomethane	0.2	believed absent, nd
Tetrachloroethylene	0.9	believed absent, nd
Trichloroethylene	1.9	dry dock floor drainage[4]
Chlorine[7]	believed present; not tested[5,6]	believed present; not tested

Table 7: Pollutants Present at Dry Dock Outfalls

Parameters	Maximum Daily Concentrations (µg/L unless noted)	
	Outfalls 018A, 018B, 096	Outfall 019
Nitrogen[8]	Believed present; not tested	believed present; not tested
Phosphorus[8]	Believed present; not tested	believed present; not tested
Sulfide[9]	Believed present; not tested	believed absent, not tested
Surfactants	Believed present; not tested	believed present; not tested
Molybdenum[10]	Believed present; not tested	believed present; not tested
Tin[10]	Believed present; not tested	believed present; not tested
Titanium[10]	Believed present; not tested	believed present; not tested
Nickel	believed present; nd	believed present; nd
Cadmium	believed present; nd	believed present; nd
Chromium	believed absent, nd	believed present; nd
1,1 Dichloroethane	dry dock floor drainage	dry dock floor drainage
1,2 Dichloroethane	nd	dry dock floor drainage
1,1 Dichloroethylene	dry dock floor drainage	believed absent, nd
1,2 Dichloropropane	dry dock floor drainage	believed absent, nd
1,1,1-Trichloroethane	dry dock floor drainage	dry dock floor drainage

Notes:

1 nd 5.0 = not detected at indicated concentration.
2 nd = not detected
3 believed absent = In NPDES permit application, the permittee listed the analyte as "believed to be absent"
4 dry dock floor drainage = Pollutant was detected in dry dock floor drainage sample or dry dock floor drainage pumpwell, but not at the outfall (i.e. after wastestream is combined with groundwater and ship cooling water).
5 believed present = In NPDES permit application, the permittee listed the analyte as "believed to be present"
6 not tested = the analyte has not been tested for
7 Chlorine is present in discharges of potable water, non-contact cooling water and freeze protection water.
8 Nitrate-Nitrite and phosphorus are present in surface waters which enter the dry docks through hydrostatic relief and caisson leakage.
9 Based on presence of sulfide odors. The Navy attributed the sulfide odors in dry dock 3 to be related to contamination addressed under CERCLA (see page 23)
10 Pollutant is a constituent of HY80 steel, of which the Navy vessel hulls are constructed. Hulls are cut up for disposal/recycling. Cutting debris can potentially enter the dry dock drainage systems.
11 Outfall has only been sampled once for pH.
mg/L milligrams per liter
µg/L micrograms per liter

DRY DOCK FLOOR DRAINAGE SYSTEM

Dry dock floor drainage first passes through a sediment trap, which allows heavy sediment to settle. The wastestream then flows to a wet well. The dry dock floor drainage system is piped to allow the Navy to direct the flows from the dry dock floor to one of three locations: directly to Sinclair Inlet, to the sanitary sewer, or to tanks for further treatment prior to discharge to the sanitary sewer. The Navy refers to this system as the Process Water Control System (PWCS). Each of the dry docks is equipped with a PWCS. During development of the 1994 NPDES permit, the PWCS did not exist.

The PWCS can operate in four modes: Auto, Bay, Tank, and Sewer. In Auto mode, the destination of the effluent is based on turbidity. Lower turbidity drainage (generally less than 25 NTU) is discharged to Sinclair Inlet. Higher turbidity drainage is diverted to the sewer. The Auto mode can also be set to send higher turbidity flows to temporary tanks, for further treatment. There are no permanent storage tanks hard-piped to the drainage system for this purpose. The selected operation mode of the system varies depending on activities occurring within the dry dock, precipitation events, and whether the capacity of the sanitary sewer system allowance for the day has been met.

Discharges to the sanitary sewer are sent to the Bremerton POTW under the State Waste Discharge Permit. The maximum volume of dry dock discharge that the PSNS can send to the sanitary sewer each day is 260,000 gallons. Once the maximum flow for the day is reached, the PWCS is removed from the Auto mode, and flows are sent directly to Sinclair Inlet, or they can be diverted to temporary storage tanks for later discharge to the sanitary sewer. However, there are no permanent storage tanks used to store stormwater.

When certain activities are occurring on the dry dock floors, the PWCS is operated to send flows directly to the sanitary sewer and/or treatment system. Such activities include:

- Pressure wash water
- Dry dock washdown/cleaning water
- Hydro-blast water

Wastestreams from the dry dock floor can also bypass the PWCS all together. The PSNS uses temporary hoses to send the flow directly to the drainage tunnels.

Water from the PWCS to be discharged to the Sinclair Inlet flows to a wet well. There, it combines with other waters (groundwater and vessel non-contact cooling water) before being pumped through the dry dock outfalls. The NPDES sampling point in the 1994 permit and the draft permit is after the dry dock drainage combines with the ground water and vessel non-contact cooling water.

As discussed above, several wastestreams from the dry docks do not flow through the dry dock drainage system. These include: dock de-flooding water, partially flooded dry dock discharge, and caisson ballast water. These are discharged through other outfalls.

The wastewater that is diverted to the tanks for treatment may be treated in either the Wastewater Filtration Equipment (WWFE) system or the Oily Water Treatment System (OWTS). The effluent from the WWFE and the OWTS is discharged to the sanitary sewer. The effluent from these treatment systems is covered under the State Waste Discharge Permit.

DRY DOCK OUTFALLS

There are four main outfalls from the dry dock operations: 018A, 018B, 096, and 019. See *Table 8: Dry Dock Outfalls*. Outfalls 018A, 018B, and 096 discharge from dry docks 1, 2, 3, 4 and 5. Dry dock 6 discharges through Outfall 019.

The drainage system for dry docks 1 through 5 is hydraulically connected through a single drainage tunnel. Docking/undocking a vessel in any one of dry docks 1 through 5 may require short-term changes in the location of drainage water discharge. Because a single drainage tunnel hydraulically connects the five dry docks, valves in the drainage tunnel are used to isolate the dry dock being flooded. Isolating a dry dock requires the PSNS to use non-primary pumpwells and outfalls (Outfall AAA and BBB) to temporally discharge drainage water.

Table 8: Dry Dock Outfalls

Outfall 018A	Depth of pipe	0.8 feet at mean low low water
	Type pipe:	Open-ended
	Water depth:	42 feet from floor
	Diameter:	24 inches
	Latitude:	47° 33' 35"
	Longitude:	122° 38' 11"
	Dry docks Served:	1-5
Outfall 018B	Depth of pipe	0.8 feet at mean low low water
	Type pipe:	Open-ended
	Water depth:	42 feet from floor
	Diameter:	24 inches
	Latitude:	47° 33' 36"
	Longitude:	122° 38' 10"
	Dry docks Served:	1-5
Outfall AAA	Depth of pipe	Unknown
	Type pipe:	Open-ended
	Water depth:	Approximately 25 feet from floor
	Diameter:	Unknown

Table 8: Dry Dock Outfalls		
	Latitude:	Unknown
	Longitude:	Unknown
	Dry docks Served:	3
Outfall BBB	Depth of pipe	Unknown
	Type pipe:	Open-ended
	Water depth:	Approximately 20 feet from floor
	Diameter:	16 inches
	Latitude:	Unknown
	Longitude:	Unknown
	Dry docks Served:	3a
Outfall 096	Depth of pipe	0.8 feet at mean low low water
	Type pipe:	Open-ended
	Water depth:	42 feet from floor
	Diameter:	24 inches
	Latitude:	47° 33' 37"
	Longitude:	122° 37' 56"
	Dry docks Served:	1-5
Outfall 019	Depth of pipe	5.17 feet at mean low low water
	Type pipe:	Open-ended
	Water depth:	43 feet from floor
	Diameter:	36 inches
	Latitude:	47° 33' 12"
	Longitude:	122° 38' 30"
	Dry docks Served:	6

OUTFALL 018A AND 018B

Outfall 018A and 018B discharge from dry docks 1 through 5. Water to the outfalls is pumped through pumpwell #5 (located at dry dock 5) or pumpwell #4 (located at dry dock 4). The pumps operate in lead-lag mode, with the lead pump being alternated monthly. Both outfalls discharge just west of dry dock 4.

OUTFALL 096

Outfall 096 discharges just south of dry dock 2. Water to the outfall is pumped through pumpwell #2. Pumpwell #2 only operates under certain occasions depending on which dock is hydraulically isolated.

OUTFALL AAA AND BBB

During certain docking/undocking operations discharges of dry dock drainage may occur directly from outfalls AAA or BBB, located at the south end of dry dock 3. Water to the outfall is

pumped through pumpwell #3 and 3a. Discharges from this outfall are infrequent and have durations typically less than five hours.

During certain dry dock flooding sequences, discharge of dry dock drainage occur directly from dry dock pumpwell 3 or 3a through outfalls AAA or BBB. These outfalls are only used when:

- dockings occur at dry docks 1 and 2
- the drainage culvert is unable to handle the dry dock drainage from dry dock 3, or
- during routine preventative maintenance (brief cycling to insure the pumps operate).

The outfall for pumpwell 3A (Outfall AAA) is under pier 6 on the east side about 45 feet south of the quay wall at approximately 25 feet deep. The outfall for pumpwell 3 (Outfall BBB) is located on the quay wall on the west side of dry dock 3. PSNS estimates that total discharge from these outfalls is less than 4 hours per year.

OUTFALL 019

Outfall 019 discharges from the east side of the south end of dry dock 6. The outfall is hydraulically isolated from the other outfalls.

B. STREAM GENERATION PLANT AND MISCELLANEOUS INDUSTRIAL WASTE

ACTIVITY AND WASTESTREAMS

A steam generation plant is located at the southwest corner of the PSNS. Wastestreams associated with the steam generation plant and other miscellaneous industrial wastes that are treated at the on-site Steam Generation Plant Treatment Facility and discharged under the NPDES permit are summarized in Table 9: *Wastestreams Treated at Steam Generation Plant Treatment Facility*. The wastestreams and treatment facility are further described below.

Some wastestreams associated with the stream generation plant are discharged to the sanitary sewer under the State Waste Discharge Permit. These are the air compressor cooling tower blowdown and the cooling tower blowdown associated with the emergency diesel generators.

Table 9: Wastestreams Treated at Steam Generation Plant Treatment Facility	
Wastestream	**Volume (gallons per day)**
Demineralizer regeneration waste • backwash, rinse and regeneration process	55,000
Diversion manhole and oil water separator • Steam Plant floor drains (Building 900) • Steam tunnel drain • Oil Handling Building floor drains (Building 920) • Coffer dam for 100,000-gallon diesel tank (Tank 32) • Diesel generator basement sump • Dewatering water from stormdrain catch-basin waste • Concrete tool wash area • Coal handling building sump (Building 917)	10,000
Equalization Basin • Boiler bottom blowdown • Boiler continuous blowdown • Carbon filter backwash and rinse water (raw water and condensate return)	17,000
Total	82,000

DEMINERALIZER REGENERATION WASTE

The boiler feedwater is treated for the removal of suspended and dissolved solids. The water treatment process includes clarification, carbon filtration, and ion exchange. The process generates two wastestreams: spent regenerate and filter backwash. This spent regenerate is first neutralized then sent to the equalization basins. The carbon backwash is sent directly to the equalization basin.

DIVERSION MANHOLE AND OIL/WATER SEPARATOR

There are several sources of wastewater associated with the piping and equipment drainage for the steam generation facility and floor drains. This wastestream is sent to an oil/water separator prior to joining the equalization basin.

EQUALIZATION BASIN

Dissolved solids and particles entering a boiler will remain behind when steam is generated. During operation the concentration of solids builds up. Boiler blowdown (manual and continuous) and chemical additives are used to control solids in the boiler water. The continuous blowdown utilizes a calibrated valve and a blowdown tap near the boiler water surface. The blowdown continuously takes water from the top of the boiler at a predetermined rate. Manual

blowdown is accomplished through tapings at the bottom of the boiler. These openings allow for the removal of solids that settle at the bottom of the boiler. Manual blowdown is also used to keep water level control devices and cutoffs clean of any solids that would interfere with their operation. Chemical additives to the boiler water to prevent corrosion include ChemTreat BL-1283, BL-1544, and BL-1752.

TREATMENT

The steam generation plant wastewater treatment facility provides flow equalization, neutralization, slow sand filtration, and final pH adjustment.

POLLUTANTS PRESENT

Pollutants detected in the treated effluent from the steam generation plant treatment facility are summarized in *Table 10: Pollutants in Outfall 021 (From Steam Generation Plant)*.

Table 10: Pollutants in Outfall 021 (From Steam Generation Plant)

Parameters	Maximum Daily Concentrations
BOD_5	6.0 mg/L
TOC	4.0 mg/L
TSS	228 mg/L
pH (Range)	6.7 - 7.1 std. units
Oil and Grease	12 mg/L
Temperature	86 °F (30 °C)
Chloroform	14.18 mg/L

STEAM GENERATION PLANT OUTFALL

The treated wastewater effluent from the steam generation plant treatment facility is discharged through Outfall 021 at an average flow of 82,000 gallons per day (gpd). Physical characteristics of the outfall are summarized in *Table 11: Steam Generation Plant Outfall 021*.

Table 11: Steam Generation Plant Outfall 021

Depth of pipe:	37.4 feet at mean low low water
Length:	40 feet
Type pipe:	Diffused port
Water depth:	??? from floor
Diameter:	8 inches
Latitude:	47° 33' 06"
Longitude:	122° 39' 09"

C. STORMWATER

The separate storm sewer system drains stormwater runoff from two distinct geographical areas at the Bremerton Naval Complex, the PSNS and the Naval Station. The PSNS is a heavy industrial type area, where Navy ships are overhauled, maintained, and disassembled. The Naval Station is a non-industrial, relatively open access area with both paved and unpaved areas. Land use in this area includes mostly residential housing and restaurants.

In addition to the stormwater collected from the entire Complex, there are five pipe connections from the City of Bremerton's storm sewer drainage system and two connections from the City of Bremerton's combined sewer collection system. The City of Bremerton is in the process of separating its combined wastewater/storm sewer system in those portions that connect to the Bremerton Naval Complex storm sewer system.

INFRASTRUCTURE

In the late 1960s and early 1970s, the Navy separated the storm sewer system from the combined wastewater/storm sewer system. After separation, numerous cross-connections between the wastewater system and the storm sewer system were identified and corrected. The most recent cross connections were identified in 2005, as part of the total maximum daily load (TMDL) fecal coliform sampling efforts. There are currently no known cross-connections between the storm sewer and wastewater systems within the Complex. The permittee requires the permittees to certify that all storm sewers have been inspected for cross-connections.

The storm sewer system consists of approximately 136,000 feet of collection lines, with pipe diameters ranging from four inches to 54 inches; 4,196 grated drain inlets; approximately 15 oil/water separators; and 156 pipe outfalls to Sinclair Inlet. The system flows by gravity to Sinclair Inlet. There are no pumping stations. There are two detention ponds located in parking lots in the Naval Station. The grated drain inlets can be distinguished as 1,807 "non-rail" catch basins and 2,389 track inlets. The track inlets drain the crane, railroad tracks and piers. The non-rail catch basins drain all other areas such as roofs, streets, and general pavement. Of the 2,389 track inlets, 1,043 are open drains, draining directly to Sinclair Inlet, with no piping. These open drains are primarily located on the piers. There is no distinct stormwater collection system from the piers.

CONDITION OF THE STORM SEWER SYSTEM - STORM SEWER SYSTEM RESTORATION WORK

In May 1994, the PSNS was added to the National Priorities List under the Comprehensive Environmental Response, Compensation, and Liability Act (CERCLA). Remedies were developed to address identified risks at the site, including risks to marine sediment quality posed by potential movement of contaminated stormwater and groundwater into Sinclair Inlet. The selected remedy for the site is contained in the November 2003 Record of Decision, and included

restoration of the stormwater infrastructure. As part of the CERCLA clean-up effort, the storm sewer system in a portion of the industrial area underwent restoration. The remedial investigation found that many stormwater lines and catch basins contained solid materials accumulated over many years of facility use. Chemical contamination was commonly found in samples of catch basin sediments. The sediments were identified as a source of contamination since stormwater flowing through the sediment can pick up chemicals in dissolved or particulate form.

In addition, some stormwater lines were damaged, which increases the potential for the lines to act as a contaminant pathway, since gaps or openings in the lines provide a means for contaminants in soil or groundwater to enter the lines and eventually reach Sinclair Inlet. The restoration work involved sediment and debris removal, inspection of the integrity of the stormwater lines and catch basins, and repair or replacement of the damaged storm drain lines and catch basins where required and feasible. The restoration work was completed in 2006. (U.S. Navy, 2003)

STORMWATER BASINS

There are an estimated 156 outfalls at site, all draining to Sinclair Inlet. There are 92 outfalls draining an area greater than 5,000 square feet (0.11 acres). These outfalls are listed in *Table 12: Stormwater Outfalls Draining Greater Than 5,000 Square Feet*.

Table 12: Stormwater Outfalls Draining Greater Than 5,000 Square Feet

NPDES Outfall Number	Latitude	Longitude	Area of Impervious Surface (square feet)	Total Area Drained (square feet)	PSNS Outfall Number
001	47° 33’ 40”	122° 37’ 31”	879,000	879,000	126.4
002*	47° 33’ 36”	122° 37’ 37”	84,000	84,000	126.1
003*	47° 33’ 36”	122° 37’ 47”	454,000	454,000	124
004	47° 33’ 39”	122° 37’ 49”	5,000	5,000	122
005	47° 33’ 41”	122° 37’ 52”	105,000	105,000	117
006*	47° 33’ 39”	122° 37’ 54”	414,000	414,000	115.1
007	47° 33’ 36”	122° 38’ 2”	244,000	244,000	106
008	47° 33’ 35”	122° 38’ 11”	478,000	478,000	096
009	47° 33’ 22”	122° 38’ 22”	No data	No data	No data
010*	47° 33’ 21”	122° 38’ 31”	1,272,000	2,544,000	081.1
011	47° 33’ 21”	122° 38’ 39”	154,000	154,000	056
012*	47° 33’ 21”	122° 38’ 41”	214,000	214,000	053
013*	47° 33’ 21”	122° 38’ 58”	161,500	161,500	020.1
014*	47° 33’ 21”	122° 39’ 2”	2,009,500	4,019,000	015
015	47° 33’ 15”	122° 39’ 11”	259,000	259,000	011

Table 12: Stormwater Outfalls Draining Greater Than 5,000 Square Feet

NPDES Outfall Number	Latitude	Longitude	Area of Impervious Surface (square feet)	Total Area Drained (square feet)	PSNS Outfall Number
017	47° 33’ 26”	122° 37’ 48”	40,000	40,000	123
018A/018B	47° 33’ 36”	122° 38’ 10”	616,683	616,683	Dry docks 1-5
019	47° 33’ 11”	122° 38’ 33”	207,345	207,345	Dry dock 6
022*	47° 33’ 15”	122° 39’ 17”	554,000	554,000	008
023	47° 33’ 37”	122° 37’ 36”		Inc. w/001	126
024	47° 33’ 37”	122° 37’ 37”	24,000	24,000	126.2
025*	47° 33’ 36”	122° 37’ 44”	116,000	116,000	124.1
026	47° 33’ 40”	122° 37’54”	20,000	20,000	113
027	47° 33’ 37”	122° 37’57”	54,000	54,000	108
028*	47° 33’ 37”	122° 38’0”	54,000	54,000	107
029	47° 33’ 30”	122° 38’19”	154,000	154,000	085
030*	47° 33’ 28”	122° 38’ 20”	154,000	154,000	082.5
031	47° 33’ 22”	122° 38’ 24”	184,000	184,000	082.4
032	47° 33’ 22”	122° 38’ 26”	224,000	224,000	082.3
033	47° 33’ 21”	122° 38’ 30”	204,000	204,000	082
034	47° 33’ 21”	122° 38’ 50”	209,000	209,000	032
035	47° 33’ 21”	122° 38’ 52”	94,000	94,000	031
036	47° 33’ 21”	122° 38’ 54”	54,000	54,000	028
037	47° 33’ 21”	122° 38’ 56”	86,500	86,500	024
038	47° 33’ 21”	122° 38’ 59”	94,000	94,000	017.1
039	47° 33’ 21”	122° 39’ 1”	74,000	74,000	017
040*	47° 33’ 21”	122° 39’ 5”	74,000	74,000	014
041	47° 33’ 21”	122° 39’ 8”	44,000	44,000	012
042	47° 33’ 39”	122° 37’ 50”	14,000	14,000	122
043	47° 33’ 39”	122° 37’ 52”	6,500	6,500	118.2
044	47° 33’ 39”	122° 37’ 54”	6,500	6,500	116
045	47° 33’ 38”	122° 37’ 54”	6,500	6,500	111
046	47° 33’ 36”	122° 37’ 54”	6,500	6,500	110
047	47° 33’ 37”	122° 37’ 56”	9,000	9,000	108.1
048	47° 33’ 36”	122° 38’ 2”	5,000	5,000	104
049	47° 33’ 36”	122° 38’ 3”	5,000	5,000	103
050	47° 33’ 36”	122° 38’ 4”	6,500	6,500	?
051	47° 33’ 36”	122° 38’ 3”	5,000	5,000	102
052*	47° 33’ 36”	122° 38’ 5”	627,200	784,000	101
053	47° 33’ 36”	122° 38’ 6”	104,000	104,000	099
054	47° 33’ 30”	122° 38’ 12”	94,000	94,000	090
055	47° 33’ 30”	122° 38’ 20”	24,000	24,000	084.1

Table 12: Stormwater Outfalls Draining Greater Than 5,000 Square Feet

NPDES Outfall Number	Latitude	Longitude	Area of Impervious Surface (square feet)	Total Area Drained (square feet)	PSNS Outfall Number
056	47° 33’ 29”	122° 38’ 20”	15,250	15,250	082.6
057	47° 33’ 22”	122° 38’ 27”	14,000	14,000	082.2
058	47° 33’ 14”	122° 38’ 32”	14,000	14,000	075
059	47° 33’ 13”	122° 38’ 32”	11,500	11,500	074
060	47° 33’ 12”	122° 38’ 32”	19,000	19,000	072
061	47° 33’ 11”	122° 38’ 39”	19,000	19,000	068
062	47° 33’ 12”	122° 38’ 39”	19,000	19,000	067
063	47° 33’ 13”	122° 38’ 39”	19,000	19,000	066
064	47° 33’ 14”	122° 38’ 39”	19,000	19,000	065
065	47° 33’ 15”	122° 38’ 39”	19,000	19,000	064
066	47° 33’ 16”	122° 38’ 39”	29,000	29,000	063
067	47° 33’ 17”	122° 38’ 39”	19,000	19,000	061
068	47° 33’ 17”	122° 38’ 39”	19,000	19,000	060
069	47° 33’ 18”	122° 38’ 39”	19,000	19,000	059
070	47° 33’ 19”	122° 38’ 39”	19,000	19,000	058
071	47° 33’ 20”	122° 38’ 39”	11,500	11,500	057
072	47° 33’ 21”	122° 38’ 40”	59,000	59,000	051
073	47° 33’ 21”	122° 38’ 42”	6,500	6,500	050
074	47° 33’ 21”	122° 38’ 42”	6,500	6,500	049
075	47° 33’ 21”	122° 38’ 43”	6,500	6,500	048
076	47° 33’ 21”	122° 38’ 45”	9,000	9,000	043
077	47° 33’ 21”	122° 38’ 46”	9,000	9,000	042
078	47° 33’ 21”	122° 38’ 47”	14,000	14,000	037
079	47° 33’ 21”	122° 38’ 47”	6,500	6,500	?
080	47° 33’ 21”	122° 38’ 48”	24,000	24,000	033
082	47° 33’ 21”	122° 39’ 9”	24,000	24,000	Gone
083	47° 33’ 20”	122° 39’ 10”	14,000	14,000	011.3
084	47° 33’ 19”	122° 39’ 10”	29,000	29,000	011.2
085	47° 33’ 17”	122° 39’ 10”	29,000	29,000	011.1
087	47° 33’ 15”	122° 39’ 15”	34,000	34,000	009
088	47° 33’ 15”	122° 39’ 16”	64,000	64,000	008.1
089	47° 33’ 15”	122° 39’ 18”	34,000	34,000	006
090	47° 33’ 15”	122° 39’ 19”	14,000	14,000	005
091	47° 33’ 15”	122° 39’ 20”	44,000	44,000	003.1
092	47° 33’ 15”	122° 39’ 22”	9,000	9,000	?
093	47° 33’ 13”	122° 39’ 27”	18,500	74,000	?
094	47° 33’ 8”	122° 39’ 38”	13,500	54,000	?

Table 12: Stormwater Outfalls Draining Greater Than 5,000 Square Feet					
NPDES Outfall Number	**Latitude**	**Longitude**	**Area of Impervious Surface (square feet)**	**Total Area Drained (square feet)**	**PSNS Outfall Number**
095	47° 33' 36"	122° 37' 40"	50,000	50,000	126
096	47° 33' 37"	122° 37' 56"	125,715	125,715	086
097	47° 33' 39"	122° 37 50"	120,542	120,542	121
		Total:	12,037,736	15,572,036	
*Outfall was sampled in 1994 permit.					

POTENTIAL SOURCES OF STORMWATER POLLUTANTS

The main activities capable of releasing significant pollutants to stormwater runoff at the PSNS include dry dock operations and vessel overhaul, repair and dismantling. Specific PSNS sources/activities with the potential to add pollutants to stormwater runoff are listed below (PSNS, 2005). Many of the industrial operations in the dry dock also occur in other areas at the PSNS, which may also directly discharge to the storm sewer system.

DRY ABRASIVE BLASTING

See *Dry Abrasive Blasting* on Page 8.

HIGH PRESSURE WATER

See *Pressure Washing/Hydroblasting* on Page 8.

SPILLS

See *Spills* on Page 8.

WELDING, CUTTING, AND GRINDING

See *Welding, Burning, Cutting and Grinding* on Page 8.

PAINTING OPERATIONS

See *Painting Operations* on Page 9.

STORAGE OF PARTS, CONTAINERS, AND MATERIALS

Several locations at PSNS contain materials that are treated, stored or disposed of in a manner that may allow exposure to stormwater. These may include: scrap metals, electrical and mechanical equipment, heavy equipment awaiting maintenance (such as forklifts, cranes, garbage trucks), treated lumber, scrap wood, sealed hazardous waste containers, metal ship parts awaiting spray processing, cut up submarine hulls and components, cutting debris, empty

submarine batteries, PCB waste and contaminated transformer oil, sand and gravel, paint shop equipment, reactor compartment disposal (RCD) rollers.

HEAVY EQUIPMENT OPERATIONS

Potential for equipment leaks and soil disturbance.

FILL MATERIALS IN WHICH THE STORM SEWER SYSTEM IS CONSTRUCTED

The fill material in which the storm system is constructed contains construction debris, spent blast materials, various hazardous wastes, automobile scrap, and metal plating wastes.

CRANES

By design, some older cranes discharge grease from the wheels onto the ground in order to lubricate their wheels.

LOADING/UNLOADING OPERATIONS OF HAZARDOUS MATERIALS

Potential for spills.

EPA has identified those stormwater outfalls of particular concern to this permit. These outfalls are listed in *Table 13: Stormwater Outfalls of Concern* along with the specific activities occurring in the basin. The identified outfalls were based on a review of the PSNS Stormwater Pollution Prevention Plan (SWPPP), industrial activities exposed to stormwater in the basin, and effluent monitoring results. Refer to Section VIII.B of this fact sheet for more information.

Table 13: Stormwater Outfalls of Concern

Outfalls	Location Building Name (Number)	Activity
002* (126.1)	Shipfitter/ Welder Shop (460) - south center side	Exposed materials (materials awaiting spray processing, 55-gallon drums of sludge from cutting machines)
003* (124)	Foundry Building (147) – east side	Exposed materials (lay-down areas of scrap components which could contain 313 water priority chemicals)
	Pipe and Boiler Shops (107) and Chemical Laboratory Buildings (59) – area between buildings	Exposed materials (scrap components, mechanical equipment, transformers, capacitors, other scrap electrical equipment)
	Nuclear Repair Shop (856) - east side	Exposed materials (equipment awaiting maintenance, RCD rollers), contaminated fill material area.

Table 13: Stormwater Outfalls of Concern		
Outfalls	**Location Building Name (Number)**	**Activity**
	Chemical Laboratory (59)	Exposed materials (scrap electrical components)
006* (115.1)	Foundry Building (147) – west side	Exposed materials (lay-down areas of scrap components which could contain 313 water priority chemicals)
	Nuclear Repair Shop (856) - west side	Exposed materials (equipment awaiting maintenance), contaminated fill material area.
008 (022)	Steam Plant Building (900) - west side	Exposed sand and gravel, contaminated fill material area.
010* (081.1)	Metal Preparation Building (873) – north and west sides <<Need to double check>>	Vacuum recovery unit testing area - potential for water containing residual paint and residual blast grit and paint residue
	Equipment and maintenance shop/storage (455) – south and east sides	Storage of welding equipment, and heavy equipment awaiting maintenance such as cranes, forklifts and train engines. Grinding, cutting and welding operations. Steam cleaning operations.
015 (011)	General Warehouse Compound (513)	Storage of scrap metals and metal cutting debris.
	Hazardous Waste Handling Facility (944) – east side	Uncovered storage of sealed hazardous waste drums occurs when covered storage is filled.
022* (008)	NISMF Office Building (550) – north side	Storage of heavy equipment and scrap metals.
	General Warehouse Compound (513) – south side	Cutting area, exposed materials - scrap metals and metal cutting debris. Some of the building 513 area may also discharge through outfalls 082 and 083.
	Hazardous Waste Handling Facility Building (944) – west side	Uncovered storage of sealed hazardous waste drums occurs when covered storage is filled.

Table 13: Stormwater Outfalls of Concern

Outfalls	Location Building Name (Number)	Activity
023 & 001 (126.4)	Shipfitter/ Welder Shop (460) – east side	Exposed materials - materials waiting spray processing, 55 gallon drums of sludge <<Need to double check this>> <<Why are there two NPDES outfalls for one PSNS outfall?>>
025* (124.1)	Dry dock 3 Cutting Facility – west side	Exposed materials - recycling scrap, metal cutting debris, cut-up submarine components. Cutting and dockside deactivation operations.
030* (082.5)	Metal Preparation Building (873) – south side	Outdoor storage of various paint shop equipment.
	RMTS – Scrap yard	Exposed scrap metal storage.
	Production Shops Building (480)	Material and equipment storage (pressure vessels, vacuum recovery units, and bag houses)
052* (101)	Electric Shop Building (427)	Storage of electrical components and equipment. Areas of sand blasting and steam cleaning operations. Contaminated fill material area.
089 (006)	NISMF Office Building (550) – west side	Storage of heavy equipment and scrap metals.
--- (008.1)	NISMF Office Building (550) – east side	Storage of heavy equipment and scrap metals.
095 (126)	Shipfitter/ Welder Shop (460) - west side	Exposed materials - materials waiting spray processing, 55 gallon drums of sludge ***check with BB if any exposed materials here***
	Dry dock 3 Cutting Facility – east side	Exposed materials - recycling scrap, metal cutting debris, cut-up submarine components. Cutting and dockside deactivation operations.

*Outfall was sampled in 1994 permit. Also sampled were outfalls 012, 013, 014, 028 and 040.

Source: PSNS SWPPP, 2005

POLLUTANTS PRESENT

As part of the 1994 permit requirements, the Navy was required to sample stormwater from 13 outfalls over a two-year period. The maximum detected concentrations from the sampling are listed in *Table 14: Pollutants Presents in Stormwater – Maximum Detected Concentration (µg/L unless noted)*.

Table 14: Pollutants Presents in Stormwater – Maximum Detected Concentration (µg/L unless noted)

Outfall:	**002**	**003**	**006**	**010**	**012**	**013**	**014**	**022**	**025**	**028**	**030**	**040**	**052**
TPH	1.0	1.5	N/A	N/A	8.8	8.1	4.4	3.8	8	3.5	N/A	26	1.7
BOD5 (mg/L)	7	N/A	N/A	N/A	7	24	38	4	6	ND	N/A	13	17
COD (mg/L)	140	24	N/A	N/A	85	87	89	110	240	390	N/A	86	38
TSS (mg/L)	25	11	N/A	N/A	210	43	350	420	120	130	N/A	210	44
pH Minimum	7.1	7.6	N/A	N/A	6.97	7.3	7.6	7.5	7.0	7.5	N/A	7.3	7.4
pH Maximum	7.8	8.2	N/A	N/A	7.5	7.4	8.4	9.6	9.3	7.7	N/A	7.7	7.8
Arsenic	10	ND	12	2.4	5.6	3	13	3	5.5	12	140	4.2	1.5
Cadmium	1	ND	1.4	1.2	4.3	3	2.1	2	6	1.9	6.2	2.6	ND
Chromium	15	ND	ND	34	41	13	52	13	200	47	87	23	ND
Copper	230	200	450	240	190	50	260	170	1,300	420	660	210	110
Lead	99	19	57	950	140	27	500	40	350	240	1,200	88	30
Mercury	0.2	ND	ND	1.1	0.24	ND	13	ND	ND	0.39	0.8	0.2	ND
Nickel	180	8.9	50	52	48	21	69	53	1,500	160	53	46	24
Zinc	360	230	540	490	630	150	820	440	880	610	2,800	830	180
Di-n-butlyphthalate	--	34	12	--	--	63	--	--	--	14	--	--	13
Bis (2-ethylhexly) phthalate	--	--	11.2	--	--	28	--	--	--	1,738	--	--	13
PCB-1260	--	--	--	--	--	--	--	--	--	4.7	--	--	--

1. Sample obtained during first 20 minutes of storm event. Number of storm events sampled for each parameter (for each outfall) ranged from 1 to 5.

All copper concentrations from the stormwater sampling are illustrated in Figure 5; the concentrations are compared with the benchmark concentration for copper of 20 µg/L. The significance of the benchmark monitoring is discussed on Page 47.

TREATMENT

The PSNS has BMPs in place to minimize the contact of pollutants in the stormwater runoff. The PSNS has a SWPPP as the key strategy to assure compliance with the standards. Specific stormwater treatment at the PSNS includes some oil/water separators, catch basin filters, and one retention swale. Additional discussion on BMPs is provided on Page 48.

D. WASTESTREAMS GENERATED AT PSNS NOT COVERED BY THIS PERMIT

There are several wastestreams produced at the PSNS that are not discharged to the receiving water and are not covered under this permit. Some of these major wastestreams are summarized below. These wastestreams are discharged to the Bremerton POTW and are regulated under the State Waste Discharge Permit. (Ecology, 2003)

Wastestreams not authorized under this NPDES permit include:

- Electroplating wastewater
  Electroplating wastewaters from the facility are pretreated then routed to the Bremerton POTW.

- Bilge water
  Bilge water from the vessels are pretreated at the WWTL then routed to the Bremerton POTW.

- Ultra high-pressure wash water
  The PSNS paint removal operations primarily use high and ultra-high pressure water; dry abrasive blasting has been used in the past. The PSNS employs two methods of collecting the high-pressure wastewater. The ultra high-pressure units have integral wastewater recovery and treatment systems. Once treated, the water is reused. For those systems without integral wastewater recovery capability, secondary containment is constructed or the PWCS is used.

- Hull pressure washing
  Water and water with detergent is sprayed at the hull at a pressure of approximately 2,000 to 3,000 pounds per square inch (psi). The hull pressure washing is intended to remove sea growth, slime, and salt from ship hulls.

- Dry dock pressure washing cleaning water

This wastewater consists of water used to pressure wash the dry dock before dry dock flooding, as well as water used to pressure wash the dry dock during a project.

- Domestic Wastewaters
  Domestic wastewater from the facility is routed to the Bremerton POTW.

- Ballast water from ships in dry dock
  Ballast water may be carried by ships for added stability as they travel. The water may pick up residual oil contaminants in a ship's hull. The ballast water is pumped to a tanker for treatment then sent to the Bremerton POTW.

IV. PERMIT BACKGROUND

A. SUMMARY OF 1994 PERMIT CONDITIONS

The current permit and reapplication history is summarized below:

April 1, 1994	Effective date of current permit.
September 30, 1998	Completed application submitted for permit renewal.
October 2, 1998	Revised application submitted for permit renewal.
April 1, 1999	1994 permit expired, was administratively extended.
April 12, 2002	Replacement pages to the October 2, 1998 application submitted with updated process information and corrected errors in reported monitoring data.

Because the Permittee submitted a timely application for renewal, the 1994 permit was administratively extended and remains fully effective and enforceable until reissuance of the permit.

EFFLUENT LIMITATIONS AND MONITORING

Effluent limitations in the 1994 permit are summarized in *Table 15: Effluent Limits in 1994 Permit*.

Table 15: Effluent Limits in 1994 Permit

Location	Parameter	Concentration (mg/L unless noted)		Mass-Based (lb/day unless noted)	
		Monthly Average	Daily Maximum	Monthly Average	Daily Maximum
Dry Docks 1 – 5 (Outfalls 018A, 018B, 096)	Oil and Grease	10	15	--	--
	Copper	0.019	0.033	0.44	0.77
Dry Dock 6 (Outfall 019)`	Oil and Grease	10	15	--	--
	Copper	0.019	0.033	0.83	1.44
Steam Generation Plant (Outfall 021)	Flow	0.17	--	--	--
	pH	In the range of 6.0 to 9.0 standard units. The total time outside of the range of 6.0 to 9.0 shall not exceed one percent of the operating time each month.			
	Temperature – Winter	70 °F	90 °F	--	--
	Temperature – Summer	75 °F	90 °F	--	--
	Oil and Grease	10	15	14.18	21.28
	TSS	30	100	42.53	141
	Total Chlorine Residual		0.2	--	--
	Free Available Chlorine	0.2	0.5	--	--
Steam Generation Plant (Blowdown)[1]	Chromium	0.2	0.2	--	--
	Zinc	1.0	1.0	--	--

[1] Limits apply to wastewater flow from the air compressor cooling tower blowdown and diesel generator cooling tower blowdown before it is commingled with other waste streams.

Monitoring requirements in the 1994 permit are summarized in Table 16: *Monitoring Requirements in 1994 Permit*.

Table 16: Monitoring Requirements in 1994 Permit				
Location	**Parameter**	**Sampling Frequency**	**Sampling Type**	**Comments**
Dry Docks (Outfalls 018A, 018B, 096, 019)	Flow	Weekly	Estimate	
	Oil and Grease, Copper	Weekly	Grab	
	Lead, Mercury, Zinc	Monthly	24-hour composite	Sampling was required for one year during permit cycle
	Temperature, PCBs	Monthly	Grab	
	Whole Effluent Toxicity	Quarterly	24-hour composite	Sampling was required for one year during permit cycle
Steam Generation Plant (Outfall 021)	Flow	Continuous	Record	
	Temperature, Chlorine, pH, Oil and Grease	Daily	Grab	
	Chromium, Zinc	Weekly	Grab	Air compressor and diesel generator cooling tower blowdown before it's commingled with other wastestreams
	pH	Daily	Grab	
	TSS	3/7 days	24-hour composite	
Stormwater	Conventional pollutants, metals, total petroleum hydrocarbons, cyanide, and semi-volatiles organics	Approx. per outfall over a two-year period.	Grab	13 outfalls were sampled. Not all parameters were tested for each outfall.

OTHER PERMIT CONDITIONS

The 1994 NPDES permit required development of a BMP Plan and a Stormwater Pollution Prevention Plan.

Mixing zones were established for development of the Water Quality-Based Effluent Limits (WQBELs) in the 1994 permit. Details of the mixing zones from the fact sheet for the 1994 permit are provided in Table 17: *Mixing Zones Provided in 1994 Permit*..

Table 17: Mixing Zones Provided in 1994 Permit			
Outfall 018A, 018B and 019		Outfall 021	
Chronic	Acute	Chronic	Acute
200 feet	20 feet	150 feet	None
4:1 Dilution	2:1 Dilution	100:1 Dilution	None

COMPLIANCE WITH EFFLUENT LIMITS

The permittee submits monthly discharge monitoring reports (DMRs) to EPA summarizing the results of effluent monitoring required by the permit. The permittee has violated primarily copper limits. Effluent limit violations for copper from 2003 through 2007 are summarized in *Table 18: Dry Dock Effluent Limit Violations for Copper.*

Table 18: Dry Dock Effluent Limit Violations for Copper				
Year	Concentration Daily Max	Loading Daily Max	Concentration Monthly Average	Loading Monthly Average
2003	2	1	1	1
2004	2	1	1	0
2005	3	3	1	2
2006	4	5	2	2
2007	5	13	3	4

Because of the number of violations, EPA issued a Notice of Violation to PSNS in February 2008. PSNS is currently working to address the violations.

B. PROJECT XL (ENVVEST)

The PSNS Project ENVVEST is part of EPA's eXellence and Leadership Program (Project XL). Project XL is a national pilot program that allows state and local governments, businesses and federal facilities to develop with EPA innovative strategies to test better or more cost-effective ways of achieving environmental and public health protection. In exchange, EPA will issue regulatory, program, policy, or procedural flexibilities to conduct the experiment. Specific information on Project XL may be found on the EPA website at: http://www.epa.gov/ProjectXL/. Stakeholders in the project include:

- U.S. Navy
- U.S. EPA
- Cities of Bremerton, Port Orchard, and Bainbridge Island
- Kitsap County Health District

- Suquamish Tribe
- Washington State Department of Health
- U.S. Department of Fish and Wildlife
- Washington State Department of Ecology
- Battelle Marine Science Lab
- U.S. Army Corps of Engineers
- University of Washington

V. RECEIVING WATER

A. BENEFICIAL USES AND WATER QUALITY CRITERIA

The PSNS discharges to Sinclair Inlet in Puget Sound. Section 301(b)(1)(C) of the CWA requires the development of limitations in permits necessary to meet water quality standards by July 1, 1977. Federal regulations at 40 CFR § 122.4(d) require that the conditions in NPDES permits ensure compliance with the water quality standards of all affected States/Tribes. Washington State's water quality standards are composed of use classifications, numeric and/or narrative water quality criteria, and an anti-degradation policy. The use classification system designates the beneficial uses (such as drinking water supply, contact recreation, and aquatic life) that each water body is expected to achieve. The numeric and/or narrative water quality criteria are the criteria deemed necessary by the State to support the beneficial use classification of each water body. The anti-degradation policy represents a three-tiered approach to maintain and protect various levels of water quality and uses.

In WAC 173-201A-612, the State has assigned the following specific uses for Sinclair Inlet west of longitude 122°37'W:

- Excellent aquatic life (excellent quality salmonid and other fish migration, rearing, and spawning; clam, oyster, and mussel rearing and spawning; crustaceans, and other shellfish (crabs, shrimp, crayfish, scallops, etc.) rearing and spawning)
- Shellfish (clam, oyster, and mussel) harvesting
- Primary contact recreational use
- Wildlife habitat
- Harvesting (salmonid and other fish harvesting, and crustacean, and other shellfish (crabs, shrimp, scallops, etc.) harvesting)
- Commerce and Navigation
- Boating
- Aesthetic values

The water quality criteria applicable to the proposed permit are provided in Appendix C. These criteria provide the basis for most of the effluent limits in the draft permit.

B. 303(D) LISTINGS FOR SINCLAIR INLET

In accordance with Section 303(d) of the CWA, the State of Washington must identify state waters not achieving water quality standards in spite of application of technology-based controls in the NPDES permits for point sources. Such water bodies are known as water quality limited segments.

Once a water body is identified as water quality limited, the State is required under Section 303(d) of the CWA to develop a total maximum daily load (TMDL) for the pollutant of concern. A TMDL is a mechanism for determining the assimilative capacity of a waterbody and allocating that capacity among point and non-point pollutant sources, taking into account natural background levels and a margin of safety. The assimilative capacity is the loading of a pollutant that a water body can assimilate without causing or contributing to a violation of water quality standards. The allocations for point sources, or "waste load allocations" (WLAs), are implemented through limits in NPDES permits. Permit limits for point sources must be consistent with applicable TMDL allocations.

The Washington Department of Ecology (Ecology) submitted Washington State's Water Quality Assessment for 2002/2004 on June 2, 2005, which included a list of "Category 5 waters" which represents the state's 303(d) list of impaired waters. EPA approved Category 5 of the 2002/2004 Water Quality Assessment on November 4, 2005. The only parameter on the 2002/2004 303(d) list for Sinclair Inlet is dissolved oxygen. Ecology has completed the draft 2008 Washington State Water Quality Assessment. The draft 2008 report includes two additional parameters for Sinclair Inlet: pH and fecal coliform. (Ecology, 2005; Ecology, 2008)

C. MIXING ZONES

The water quality standards at WAC 173-201A-400 allow Ecology to authorize mixing zones around a point of discharge in establishing surface WQBELs. Both "acute" and "chronic" mixing zones may be authorized for pollutants that can have a toxic effect on the aquatic environment near the point of discharge. The standards allow the concentration of pollutants within a mixing zone to exceed chronic water quality criteria so long as chronic water quality criteria are met at the boundary of the mixing zone. Acute water quality criteria may be exceeded within the acute mixing zone. The concentration of pollutants at the boundary of these mixing zones may not exceed the numerical criteria for that type of mixing zone. The National Toxics Rule (EPA, 1992) allows the chronic mixing zone to be used to meet human health criteria. In accordance with Washington Water Quality Standards, mixing zones can only be authorized for discharges that are receiving all known, available, and reasonable methods of prevention, control, and treatment (AKART) and in accordance with other mixing zone requirements of WAC 173-201A-400. A mixing zone is not granted in this permit reissuance. The permit requires an AKART study and implementation of AKART. Once the Navy has implemented AKART, Ecology may consider a mixing zone for the discharge.

If Ecology grants a mixing zone for the discharge, the permit could be reopened and modified to incorporate the mixing zone.

VI. EFFLUENT LIMITATIONS

EPA followed the CWA, state and federal regulations, and EPA's 1991 *Technical Support Document for Water Quality-based Toxics Control (TSD)* to develop the effluent limits in the draft permit (EPA, 1991). In general, the CWA requires that the effluent limit for a particular pollutant be the more stringent of either the technology-based limit or water quality-based limit. Appendix C provides discussion on the legal basis for the development of technology-based and WQBELs.

EPA sets technology-based limits based on the effluent quality that is achievable using readily available technology. The Agency evaluates the technology-based limits to determine whether they are adequate to ensure that water quality standards are met in the receiving water. If the limits are not adequate, EPA must develop additional water quality-based limits. Water quality-based limits are designed to prevent exceedances of the State water quality standards in the receiving waters.

The limits in the draft permit are listed in *Table 19: Dry Docks 1 – 5 (Outfalls 018A, 018B, 096, AAA, and BBB) Effluent Limits* through *Table 22: Stormwater Final Effluent Limitations*. Appendix C describes how the effluent limits were developed.

Table 19: Dry Docks 1 – 5 (Outfalls 018A, 018B, 096, AAA, and BBB) Effluent Limits

Parameter	Interim Effluent Limits		Final Effluent Limits	
	Maximum Daily	Average Monthly	Maximum Daily	Average Monthly
Copper, total recoverable	33 µg/L	19 µg/L	5.8 µg/L	2.4 µg/L
	0.77 lb/day	0.44 lb/day	0.34 lb/day	0.14 lb/day
Lead, total recoverable	81 µg/L	40 µg/L	14 µg/L	7 µg/L
	4.8 lb/day	2.4 lb/day	0.83 lb/day	0.42 lb/day
Mercury, total recoverable	2.2 µg/L	1.1 µg/L	0.048 µg/L	0.024 µg/L
	0.13 lb/day	0.06 lb/day	0.003 lb/day	0.001 lb/day
Zinc, total recoverable	95 µg/L	47 µg/L	95 µg/L	47 µg/L
	5.6 lb/day	2.8 lb/day	5.6 lb/day	2.8 lb/day
Arsenic, total recoverable	16 µg/L	8 µg/L	0.23 µg/L	0.16 µg/L
	0.95 lb/day	0.48 lb/day	0.014 lb/day	0.009 lb/day
Temperature	16° C	---	16° C	---
Oil and Grease	15 mg/L	10 mg/L	15 mg/L	10 mg/L
Oily Sheen	No visible sheen	----	No visible sheen	----

Table 19: Dry Docks 1 – 5 (Outfalls 018A, 018B, 096, AAA, and BBB) Effluent Limits				
Parameter	**Interim Effluent Limits**		**Final Effluent Limits**	
	Maximum Daily	**Average Monthly**	**Maximum Daily**	**Average Monthly**
Total Chlorine Residual	12 µg/L	6.1 µg/L	12 µg/L	6.1 µg/L
	0.71 lb/day	0.36 lb/day	0.71 lb/day	0.36 lb/day
Turbidity	5 NTU above background[1]	----	5 NTU above background[1]	----
1 - If background turbidity is greater than 50 NTU, the turbidity shall not exceed 10 percent over background.				

Table 20: Dry Dock 6 (Outfall 019) Effluent Limits				
Parameter	**Interim Effluent Limits**		**Final Effluent Limits**	
	Maximum Daily	**Average Monthly**	**Maximum Daily**	**Average Monthly**
Copper, total recoverable	33 µg/L	19 µg/L	5.8 µg/L	2.5 µg/L
	1.44 lb/day	0.83 lb/day	0.66 lb/day	0.28 lb/day
Lead, total recoverable	19 µg/L	9 µg/L	14 µg/L	7 µg/L
	2.2 lb/day	1.1 lb/day	1.59 lb/day	0.80 lb/day
Mercury, total recoverable	1.9 µg/L	0.9 µg/L	0.048 µg/L	0.024 µg/L
	0.22 lb/day	0.11 lb/day	0.005 lb/day	0.003 lb/day
Zinc, total recoverable	95 µg/L	47 µg/L	95 µg/L	47 µg/L
	10.8 lb/day	5.4 lb/day	10.8 lb/day	5.4 lb/day
Arsenic, total recoverable	9 µg/L	4 µg/L	0.23 µg/L	0.16 µg/L
	0.97 lb/day	0.48 lb/day	0.026 lb/day	0.018 lb/day
Temperature	16° C	----	16° C	----
Oil and Grease	15 mg/L	10 mg/L	15 mg/L	10 mg/L
Oily Sheen	No visible sheen	----	No visible sheen	----
Total Chlorine Residual	12 µg/L	6.1 µg/L	12 µg/L	6.1 µg/L
	1.37 lb/day	0.69 lb/day	1.37 lb/day	0.69 lb/day
Turbidity	5 NTU above background[1]	----	5 NTU above background[1]	----
1 - If background turbidity is greater than 50 NTU, the turbidity shall not exceed 10 percent over background.				

Table 21: Steam Generation Plant Effluent Limits		
Parameter	**Effluent Limits**	
	Maximum Daily	**Average Monthly**
Temperature	16.0° C	----
Oil and Grease	15 mg/L	10 mg/L
	10 lbs/day	7 lbs/day
TSS	100 mg/L	30 mg/L
	68 lbs/day	21 lbs/day
pH, su	Between 7.0 to 8.5	

Table 22: Stormwater Final Effluent Limitations	
Parameter	Final Maximum Daily Effluent Limit
Copper, total recoverable	5.8 µg/L
Lead, total recoverable	221 µg/L
Mercury, total recoverable	2.1 µg/L
Zinc, total recoverable	95 µg/L
Arsenic, total recoverable	69 µg/L
Oily Sheen	No oily sheen
Turbidity	5 NTU above background[1]
1 - If background turbidity is greater than 50 NTU, the turbidity shall not exceed 10 percent over background.	

VII. MONITORING REQUIREMENTS

Section 308 of the CWA and federal regulation 40 CFR 122.44(i) require that monitoring be included in permits to determine compliance with effluent limitations. Monitoring may also be required to gather data for future effluent limitations or to monitor effluent impacts on receiving water quality. The PSNS is responsible for conducting the monitoring and reporting the results to EPA on monthly DMRs and in annual reports. This section describes the monitoring requirements in the draft permit.

The submittal date for the DMR is changed from the 10th of the following month to the 15th of the following month at the request of the permittee.

A. EFFLUENT MONITORING

The proposed monitoring requirements are based on the minimum sampling necessary to adequately monitor the facility's performance.

DRY DOCKS

The dry dock effluent monitoring requirements in the draft permit are summarized in Table 23: *Dry Dock Outfalls Monitoring Requirements (Outfalls 018A, 018B, 096, AAA, BBB and 019).*

Table 23: Dry Dock Outfalls Monitoring Requirements (Outfalls 018A, 018B, 096, AAA, BBB and 019)

Parameter	Units	Sample Frequency	Sample Type
Copper, total recoverable	µg/L	Weekly	24-hour Composite
Lead, total recoverable	µg/L	Weekly	24-hour Composite
Mercury, total recoverable	µg/L	Weekly	Grab
Zinc, total recoverable	µg/L	Weekly	24-hour Composite
Arsenic, total recoverable	µg/L	Weekly	24-hour Composite
Oil and Grease	mg/L	Monthly	Grab
Oily Sheen	--	Monthly	Visual Observation
Total Residual Chlorine	µg/L	Weekly	Grab
Temperature	°C	Daily	Grab
Outfall Flow	gpd	Continuous	Recording
Priority Pollutants	µg/L	Annually	24-hour Composite
Turbidity	NTU	Monthly	Grab
Tributyltin	µg/L	Monthly	24-hour Composite
Acute Whole Effluent Toxicity	TU_a	Quarterly for One Year	24-hour Composite
Chronic Whole Effluent Toxicity	TU_c	Quarterly for One Year	24-hour Composite

Flow is revised from weekly estimate to a continuous recording. The PSNS has already equipped the outfalls with flow meters to more accurately measure the flows.

Oil and grease. There have been no detectable concentrations of oil and grease from the dry dock outfalls. The permittee requested that monitoring for oil and grease be eliminated. The monitoring frequency is instead reduced from weekly to monthly.

Temperature. The permit requires daily monitoring for temperature because the permit has a new limit for temperature.

Metals. The permit retains a weekly monitoring frequency for copper but changes the collection method from grab to composite. The US EPA NPDES Permit Writers Manual (EPA-833-B-96-003) and Appendix F of the *TSD* recommend that composite samples be collected when the effluent being sampled varies significantly over time, either as a result of flow or quality changes. The effluent may change as a result of activities and conditions within the dry dock and therefore justifies composite sampling. The draft permit adds weekly monitoring for mercury, lead, arsenic, and zinc to evaluate compliance with those effluent limits.

Chlorine. The shipyard adds chlorine to the seawater cooling systems to prevent fouling.

Turbidity. The permit requires monitoring for turbidity to assess compliance with the turbidity water quality criteria.

DRY DOCK FLOOR DRAINAGE (PROCESS WATER CONTROL SYSTEM)

The draft permit requires weekly monitoring of the wastestream from the dry dock floor during eligible storm events (see *Table 24: Dry Dock Floor Drainage (Process Water Control System) Monitoring Requirements*). These samples are taken prior to mixing with other waste streams or ship cooling water. This monitoring will allow assessment of the stormwater BMPs and evaluation of the dry dock drainage prior to any dilution with groundwater and ship cooling water.

Table 24: Dry Dock Floor Drainage (Process Water Control System) Monitoring Requirements

Parameter	Units	Sample Frequency	Sample Type
Flow	gpd	Continuous	Recording
Copper, total recoverable	µg/L	Weekly	2-hour Composite
Lead, total recoverable	µg/L	Weekly	2-hour Composite
Mercury, total recoverable	µg/L	Weekly	Grab

Table 24: Dry Dock Floor Drainage (Process Water Control System) Monitoring Requirements			
Parameter	**Units**	**Sample Frequency**	**Sample Type**
Zinc, total recoverable	µg/L	Weekly	2-hour Composite
Arsenic, total recoverable	µg/L	Weekly	2-hour Composite
Oil and Grease	mg/L	Weekly	Grab
Turbidity	NTU	Weekly	Grab
TSS	mg/L	Weekly	2-hour Composite

WHOLE EFFLUENT TOXICITY TESTING

The Washington water quality standards state that surface waters of the State shall be free from toxic substances in concentrations that impair designated beneficial uses. Whole effluent toxicity (WET) is defined as "the aggregate toxic effect of an effluent measured directly by an aquatic toxicity test." Aquatic toxicity tests are laboratory experiments that measure the biological effect (e.g., survival, growth, and reproduction) of effluents or receiving waters on aquatic organisms. In aquatic toxicity tests, groups of organisms of a particular species are held in test chambers and exposed to different concentrations of an aqueous test sample (e.g., reference toxicant, effluent, or receiving water). Observations are made at predetermined exposure periods. At the end of the test, the responses of test organisms are used to estimate the effects of the aqueous sample.

WET tests are used to measure the acute and/or chronic toxicity of an effluent. Acute toxicity tests are used to determine the concentration of the effluent that results in mortality within a group of test organisms, during a 24-, 48- or 96-hour exposure. A chronic toxicity test is defined as a short-term test in which sublethal effects, such as fertilization, growth or reproduction, are measured in addition to lethality (in some tests). EPA believes that WET toxicity testing is appropriate to measure the aggregate toxic effects in the dry dock effluent.

The selected species for the acute testing are the invertebrates: Atlantic mysid (*Mysideopsis bahia*) and Pacific mysid (*Holmesimysis costata*); these are the marine species most sensitive to metals. The selected species for the chronic testing are the plant Giant kelp (*Macrocystis pyrifera)*, the invertebrates: Sand dollar (*Dendraster excentricus)* and Pacific mysid (*Holmesimysis costata*); these are the marine species most sensitive to metals. The sand dollar showed the most sensitivity during WET testing under the existing permit.

STEAM GENERATION PLANT

Steam generation plant monitoring requirements are summarized on *Table 25: Steam Generation Plant Effluent Monitoring* There is no monitoring for chlorine since the PSNS does not use

chlorine at the stream plant. There is no monitoring for chromium or zinc since limits and monitoring requirements for these parameters apply to cooling tower blowdown, and the PSNS discharges the cooling tower blowdown directly to the sewer.

Table 25: Steam Generation Plant Effluent Monitoring

Parameter	Monitoring	
	Frequency	Sample Type
Flow	Continuous	Recorded
Temperature	Continuous	Recorded
Oil and Grease	Daily	Grab
TSS	Three per week	24-hour composite
pH, su	Daily	Grab
Priority Pollutants	Annually	24-hour Composite

STORM WATER

Non-dry dock stormwater monitoring requirements are summarized on *Table 26: Stormwater Monitoring Requirements*. The permit requires the permittee to sample only a small number of the outfalls. The selected outfalls are based on consideration of the industrial activity, the exposed materials stored in the drainage basin, management practices and activities within the area drained by the outfalls, and previous sampling results (see Table 13: *Stormwater Outfalls of Concern* and Table 14: *Pollutants Presents in Stormwater – Maximum Detected Concentration (µg/L unless noted)*). The Navy has identified difficulties with obtaining stormwater samples from many of the industrial portions of the site. Most of the heaviest industrial activities occur close to the water, where the stormwater outfalls are tidally influenced. In addition, the stormwater infrastructure is located below all other utilities on the site. Further, much of the stormwater discharges through open drains draining directly to Sinclair Inlet, with no piping. As described on Page 23 under Part III.C *Stormwater*, there are 1,043 are open drains in the industrial area, many of which are located on the piers.

Table 26: Stormwater Monitoring Requirements

Parameter	Sample Frequency	Sample Type
Copper, total recoverable	Quarterly	Grab/Composite
Lead, total recoverable	Quarterly	Grab/Composite
Mercury, total recoverable	Quarterly	Grab
Zinc, total recoverable	Quarterly	Grab/Composite
Arsenic, total recoverable	Quarterly	Grab/Composite

Table 26: Stormwater Monitoring Requirements		
Parameter	**Sample Frequency**	**Sample Type**
TSS	Quarterly	Grab/Composite
Oil and Grease	Quarterly	Grab
Oily Sheen	Quarterly	Visual Observation
Fecal Coliform	Quarterly	Grab
Turbidity	Quarterly	Grab/Composite
Notes: Grab/Composite = The permittee may collect either a grab or composite sample.		

Stormwater samples will be collected for a comparison with benchmark values and the stormwater effluent limits.

BENCHMARK MONITORING

The permit requires a comparison of stormwater and dry dock drainage results with the benchmark levels shown on Table 27: *Benchmark Values*. The basic framework for benchmark monitoring was established in the 1995 and 2000 Multi-sector General Permit for Industrial Activities (MSGP). During development of the 2000 MSGP, EPA received substantial public comment questioning the value of analytic monitoring. EPA responded to these comments, in part, as follows: "EPA acknowledges that, considering the small number of samples required per monitoring year (four), and the vagaries of stormwater discharges, it may be difficult to determine or confirm the existence of a discharge problem as a commenter claimed. When viewed as an indicator, analytic levels considerably above benchmark values can serve as a flag to the operator that his SWPPP needs to be reevaluated and that pollutant loads may need to be reduced. Conversely, analytic levels below or near benchmarks can confirm to the operator that his SWPPP is doing its intended job. EPA believes there is presently no alternative that provides stakeholders with an equivalent indicator of program effectiveness." (EPA, 2000).

Benchmarks are included in the permit and are intended to serve as indicators to help assess the adequacy of stormwater controls. Exceedances of benchmark concentrations are intended to serve as action-levels to help the facility improve BMPs. Benchmark exceedances do not necessarily indicate that a SWPPP is inadequate, but they do indicate a need for careful review of the SWPPP to ensure that appropriate BMPs are being implemented. The benchmark values are from the 2000 MSGP and Ecology's draft Industrial Stormwater General Permit (Ecology, 2007).

Table 27: Benchmark Values	
Parameter	**Benchmark Value**
Turbidity	25 NTU
TSS	100 mg/L
pH	6 – 9 standard units
Total Zinc	115 µg/L
Total Copper	20 µg/L
Total Lead	81.6 µg/L
Oil and Grease	15 mg/L

VIII. OTHER ELEMENTS OF THE PERMIT

A. BEST MANAGEMENT PRACTICES

Section 402 of the CWA and federal regulations at 40 CFR 122.44(k) (2) and (3) authorize EPA to require BMPs in NPDES permits. BMPs are measures that are intended to prevent or minimize the generation and the potential for release of pollutants from industrial facilities to waters of the U.S. These measures are important tools for waste minimization and pollution prevention. BMPs include processes, procedures, schedules of activities, prohibitions on practices, and other management practices that prevent or reduce the discharge of pollutants in storm water runoff. Under the 1994 permit, the PSNS had a separate BMP Plan and SWPPP. In the draft permit, the BMP requirements are incorporated under the SWPPP requirements. The permittee is expected to have BMPs to manage stormwater so that the stormwater discharge will not cause or contribute to a violation of water quality standards in the receiving water.

B. STORMWATER POLLUTION PREVENTION PLAN (SWPPP)

The draft permit requires that the facility continue to implement a SWPPP. The SWPPP approach focuses on two major objectives: (1) to identify sources of pollution potentially affecting the quality of storm water discharges associated with industrial activity from the facility; and (2) ensure implementation of measures to minimize and control pollutants in storm water discharges associated with industrial activity from the facility. The SWPPP requirements are intended to facilitate a process whereby the permittee thoroughly evaluates potential pollution sources at the site and selects and implements appropriate measures designed to prevent or control the discharge of pollutants in storm water runoff. The process involves the following four steps: (1) formation of a team of qualified plant personnel who will be responsible for preparing the plan and assisting the plant manager in its implementation; (2) assessment of potential storm water pollution sources; (3) selection and implementation of appropriate

management practices and controls; and (4) periodic evaluation of the effectiveness of the plan to prevent storm water contamination. Additional background on the basis for the SWPPP may be found in the Fact Sheet for the MSGP (EPA, 2000).

The draft permit requires that any modifications to the facility be made with consideration to the effect the modification could have on the generation or potential release of pollutants. The SWPPP must be revised if the facility is modified and as new pollution prevention practices are developed.

C. AKART STUDY/EFFLUENT MIXING STUDY

In accordance with Washington Water Quality Standards, mixing zones can only be authorized for discharges that are receiving all known, available, and reasonable methods of prevention, control, and treatment (AKART) and in accordance with other mixing zone requirements of WAC 173-201A-400.

During development of this permit, Ecology confirmed that implementation of AKART would be required prior to granting a mixing zone. The requirement for an AKART study has been incorporated into the draft permit. Submittal of the AKART study is required within 12 months of the effective date of the permit. The permittee must complete implementation of AKART within three years of the effective date of the permit. The permit also includes a requirement for the permittee to conduct an effluent mixing study.

D. COMPLIANCE SCHEDULE

The permit contains a compliance schedule for the permittee to meet the WQBELs for the dry docks and storm water. The following summarizes EPA assessment on whether a compliance schedule for achieving the WQBEL is consistent with the CWA and its implementing regulations.

Does EPA have the authority to provide a compliance schedule in the permit?
Yes. EPA has the authority to provide a compliance schedule in NPDES permits only if the State has clearly indicated in its water quality standards or implementing regulations that it intends to allow them. Allowance of compliance schedules is contained in WAC 173-201A-510. This provision authorizes Ecology to establish schedules for achieving compliance with water quality criteria under certain prescribed circumstances.

Is a compliance schedule appropriate?
Yes. The permit includes more stringent WQBELs for copper for the dry dock effluent; new WQBELs for lead, mercury, zinc, arsenic and temperature for the dry dock effluent; and new WQBELs for copper, lead, mercury, zinc, and arsenic for the stormwater. These limits were developed based on new water quality standards, more stringent mixing zone requirements, and new monitoring data since development of the effluent limits in the previous permit.

Does the compliance schedule require compliance with the WQBEL as soon as possible?
EPA asserts that the required time in the permit is as soon as possible. Within three years, the PSNS must complete construction for meeting the WQBELs from the dry dock outfalls. Compliance with the effluent limits will most likely require construction of storage and/or treatment for the dry dock drainage. For the stormwater, the permittee must complete design and construction of a stormwater collection system as necessary to meet the WQBELs within 5 years. This will potentially include design and construction of stormwater collection and treatment for high risk stormwater.

Can the discharger currently comply with the WQBELs?
No. Based on the monitoring data for the facility the permittee cannot comply with the WQBELs upon the effective date of the permit. The PSNS currently has the capability to send some of the dry dock drainage to the Bremerton POTW; however, during storm events the allotted capacity that may be sent to the Bremerton POTW is exceeded.

Does the permit include interim effluent limits?
The dry docks include interim numeric limits. The interim copper limits are the existing permit limits. The permit includes interim limits for lead, mercury and arsenic based on existing performance. The interim Maximum Daily Limit (MDL) for each parameter equals the Maximum Projected Effluent Concentration. The interim average monthly limit was calculated from the MDL using Table 5.3 of the *TSD* for a coefficient of variation of 0.6 and number of samples of 4 (See Appendix C). Interim stormwater limits are in the form of BMPs.

Does the compliance schedule include an enforceable final effluent limitation and a date for its achievement that is within the time frame allowed?
Yes. The compliance schedule includes enforceable interim requirements and dates for their achievement. The final effluent limits for the dry docks must be achieved within 3 years of the effective date of the permit. The final stormwater effluent limits must be achieved with 5 years from the effective date of the permit.

IX. OTHER LEGAL REQUIREMENTS

A. ENDANGERED SPECIES ACT

The Endangered Species Act requires federal agencies to consult with National Oceanic and Atmospheric Administration Fisheries (NOAA Fisheries) and the U.S. Fish and Wildlife Service (USFWS) if their actions could beneficially or adversely affect any threatened or endangered species. <<TO BE ADDED>>>

B. ESSENTIAL FISH HABITAT

Essential fish habitat (EFH) is the waters and substrate (sediments, etc.) necessary for fish to spawn, breed, feed, or grow to maturity. The Magnuson-Stevens Fishery Conservation and Management Act (January 21, 1999) requires EPA to consult with NOAA Fisheries when a proposed discharge has the potential to adversely affect (reduce quality and/or quantity of) EFH. <<TO BE ADDED>>

C. STATE/TRIBAL CERTIFICATION

Section 401 of the CWA requires EPA to seek State or Tribal certification before issuing a final permit. As a result of the certification, the State may require more stringent permit conditions or additional monitoring requirements to ensure that the permit complies with water quality standards.

X. REFERENCES

EPA. 1991. *Technical Support Document for Water Quality-Based Toxics Control. US Environmental Protection Agency, Office of Water*, EPA/505/2-90-001.

EPA. 1992. *57 FR 60910, December 22, 1992 "The National Toxics Rule"* Codified in 40 CFR 131.36.

EPA. 2000. *Municipal Stormwater General Permit MSGP.* 65 FR 64746, October 30, 2000.

U.S. Navy. 2003. *Final Record of Decision (ROD) for OU-B Terrestrial, Bremerton Naval Complex*. November, 2003.

Washington State Department of Ecology. February 14, 2003. *Puget Sound Naval Shipyard State Waste Discharge Permit Number ST-7374.* With modifications December 12, 2003 and November 17, 2006.

Washington State Department of Ecology. 2005. *Water Quality Assessment for 2002/2004. Submitted to EPA on June 2, 2005.* Weblink: http://www.ecy.wa.gov/programs/wq/303d/2002/2002-index.html

Washington State Department of Ecology. 2006. November 20, 2006. *Water Quality Standards for Surface Waters of the State of Washington.* Chapter 173-201A WAC, Publication Number 06-10-091

Washington State Department of Ecology. November 2007. *The Draft Industrial Stormwater General Permit.* weblink: http://www.ecy.wa.gov/programs/wq/stormwater/industrial/ISWGPdraftpermit112107final.pdf

Washington State Department of Ecology. 2008. *2008 Assessment of Water Quality for the Clean Water Act Sections 303(d) and 305(b) Integrated Report.* Weblink: http://www.ecy.wa.gov/programs/wq/303d/2008/index.html

PSNS. 2005. *Stormwater Pollution Prevention Plan*

Appendix A - Figures

Figure 1 PSNS Map and Location

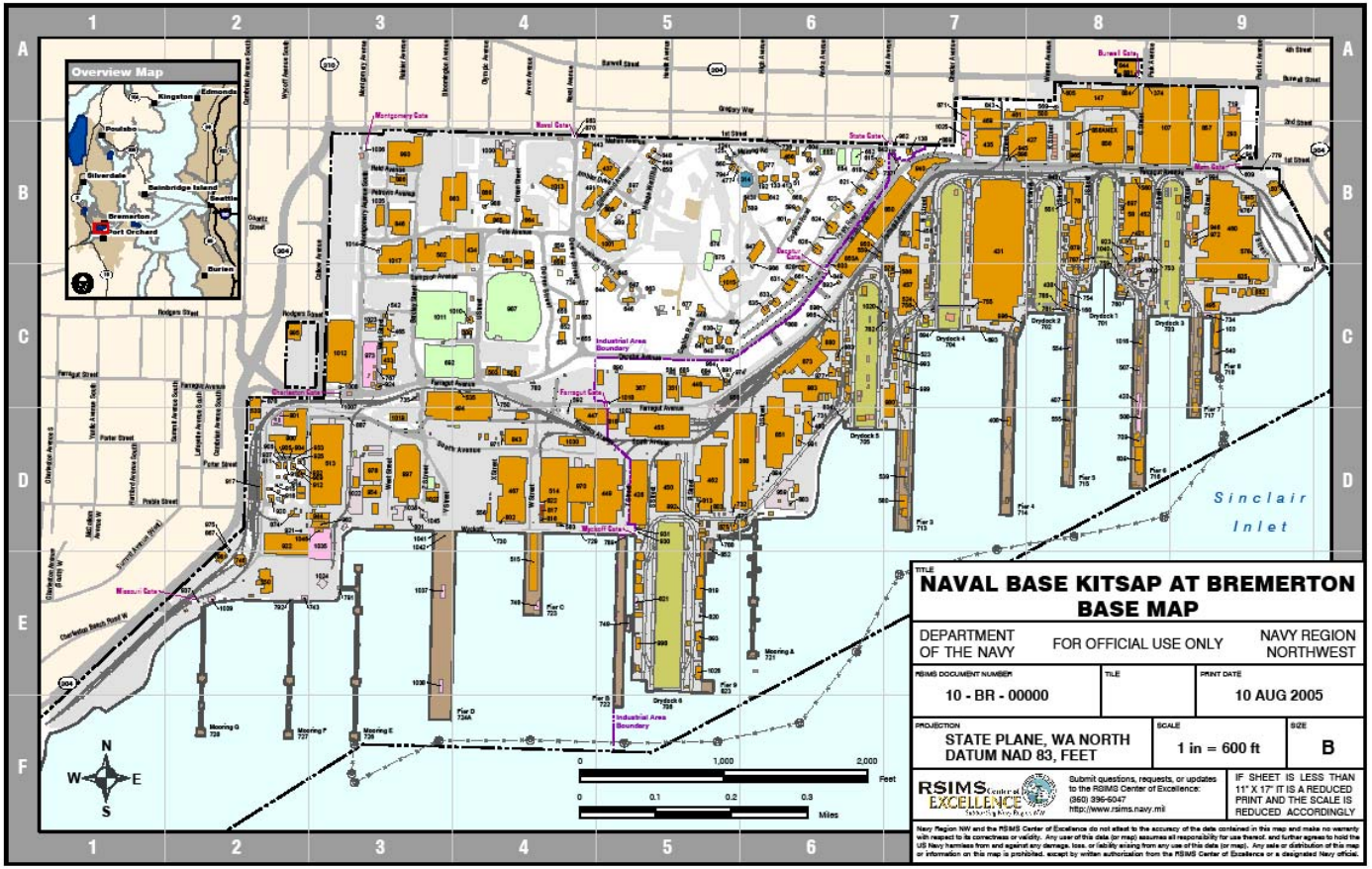

Figure 2 Wastestreams to Dry Dock

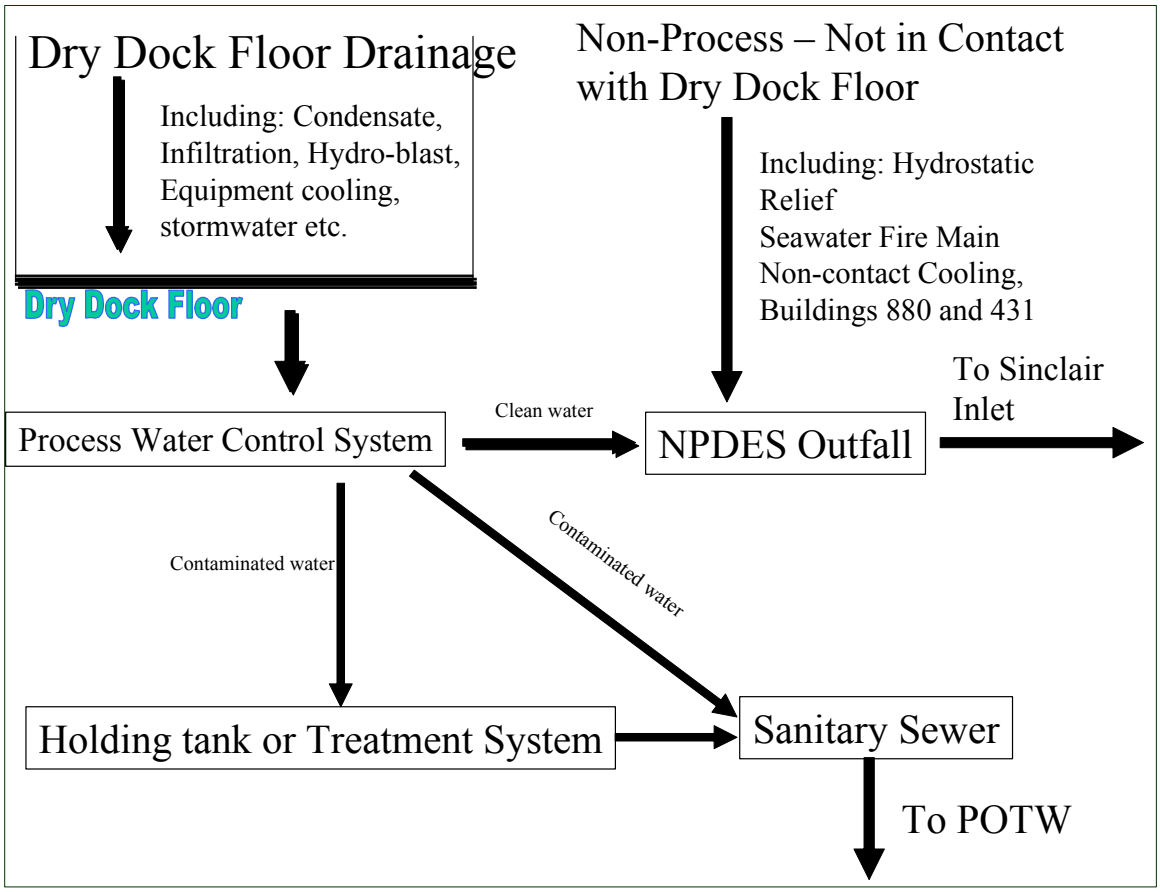

Figure 3 Diagram of Dry Dock Drainage System

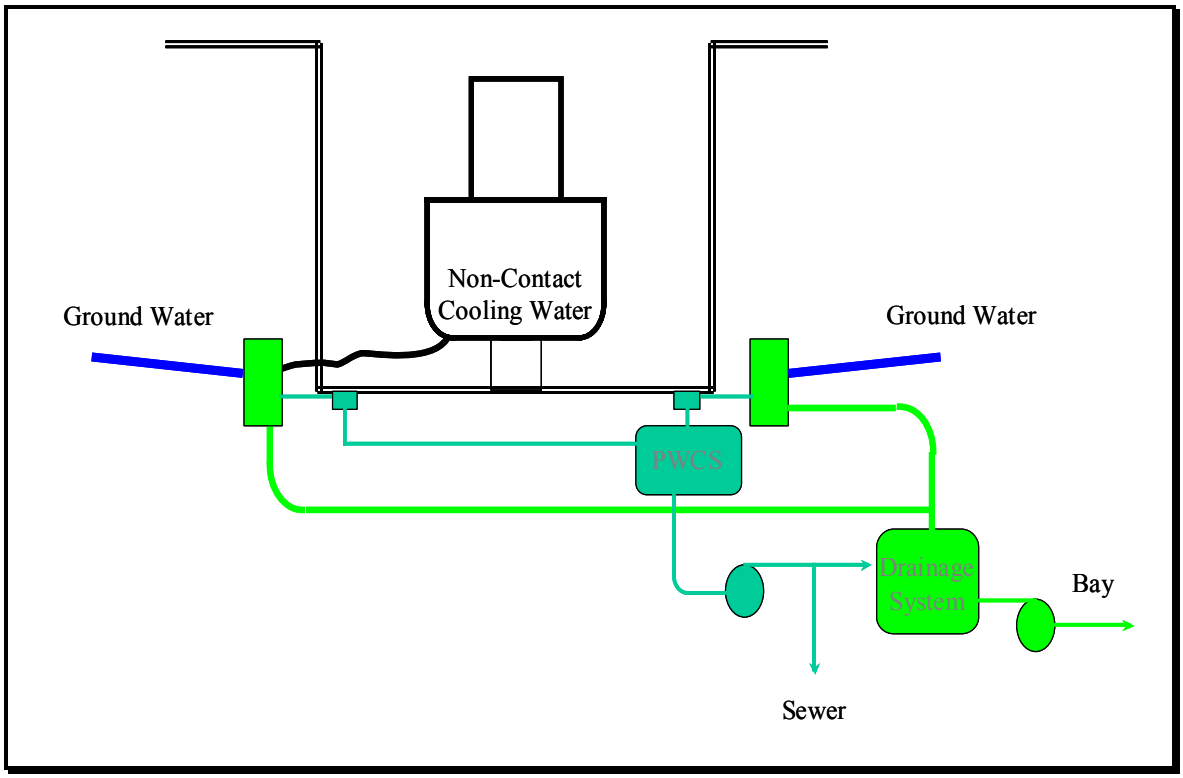

Figure 4 Wastestreams to Dry Dock Outfalls

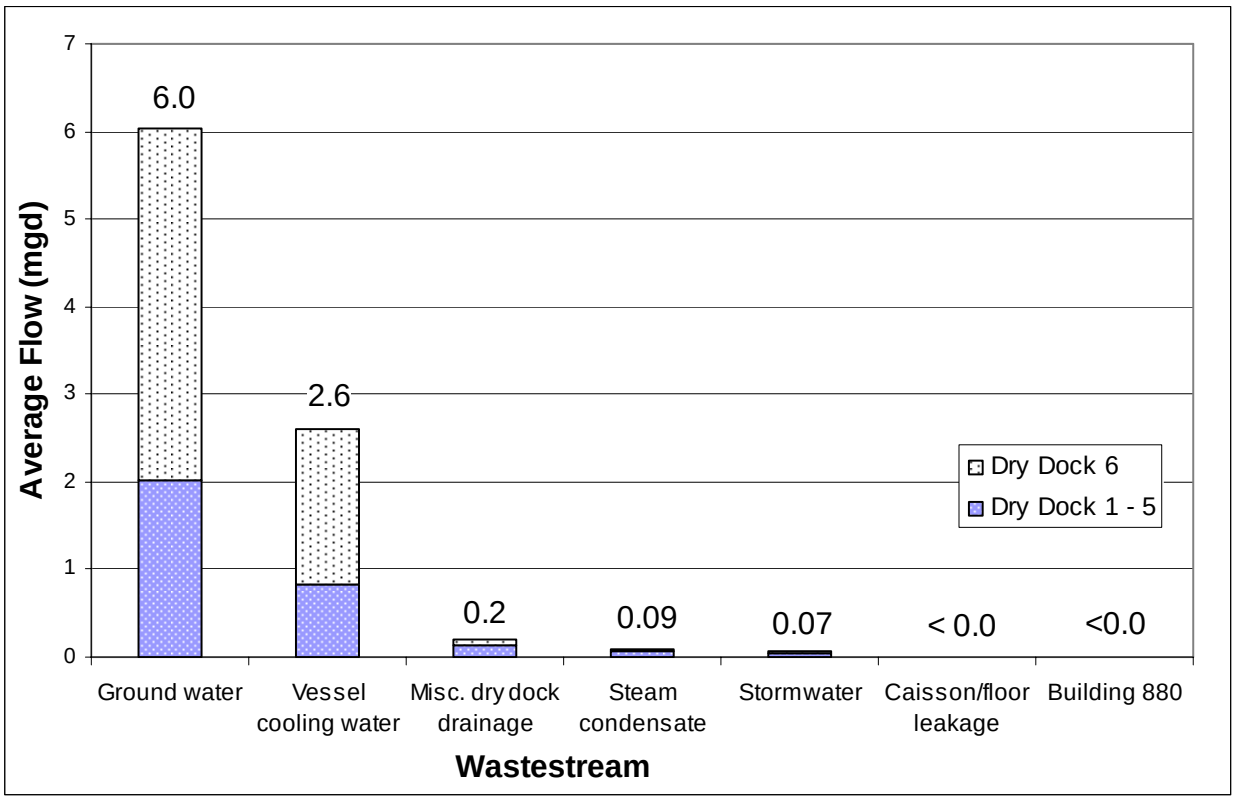

Figure 5 Copper Concentrations in Stormwater

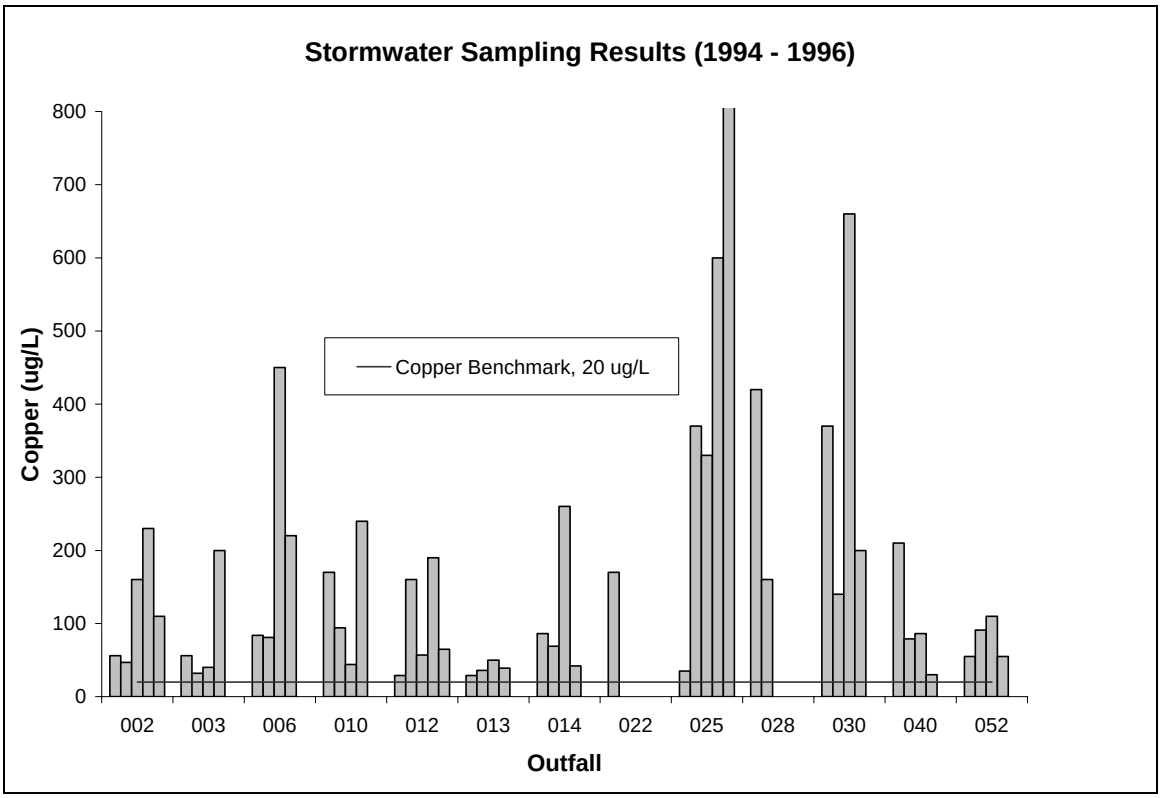

Appendix B - List of Acronyms

AKART	All known, available, and reasonable methods of prevention, control, and treatment
AML	Average monthly limit
BAT	Best available technology economically achievable
BPT	Best practical control technology currently achievable
BCT	Best conventional pollutant control technology
BMP	Best management practices
BOD5	Five-day biochemical oxygen demand
BPJ	Best Professional Judgment
°C	Degrees Celsius
C_b	background concentration of pollutant
C_d	concentration of pollutant discharge at the edge of the mixing zone
C_e	maximum projected effluent concentration
CERCLA	Comprehensive Environmental Response, Compensation, and Liability Act
CFR	Code of Federal Regulations
COD	Chemical Oxygen Demand
CWA	Clean Water Act
D	dilution
DMR	Discharge monitoring report
CV	Coefficient of variation
Ecology	Washington State Department of Ecology
EFH	Essential fish habitat
ELGs	National Effluent Limitations Guidelines
EPA	United States Environmental Protection Agency
ESA	Endangered Species Act
°F	Degrees Fahrenheit
gpd	Gallons per day
gpm	Gallons per minute
lb/day	Pounds per day
LTA	Long term average
MDL	Maximum daily limit or method detection limit
mgd	Million gallons per day
mg/L	Milligrams per liter
ml	Milliliters
MSGP	Municipal Stormwater General Permit
NOAA	National Oceanic and Atmospheric Administration Fisheries
NPDES	National Pollutant Discharge Elimination System
NTU	Nephelometric Turbidity Unit
O&M	Operation and maintenance
POTW	Publicly owned treatment works
psi	Pounds per square inch
PSNS	Puget Sound Naval Shipyard
PWCS	Process Water Control System

QAP	Quality Assurance Plan
OWTS	Oily Water Treatment System
RP	Reasonable potential
RPM	Reasonable Potential Multiplier
SWPPP	Stormwater Pollution Prevention Plan
TMDL	Total maximum daily load
TOC	Total Organic Carbon
TSD	Technical Support Document for Water Quality-based Toxics Control
TSS	Total suspended solids
TU	Toxicity Unit
UNDS	Uniform National Discharge Standards
USFWS	U.S. Fish and Wildlife Service
WAC	Washington Administrative Code
WET	Whole Effluent Toxicity
WWFE	Wastewater Filtration Equipment
WLA	Wasteload allocation
WQBEL	Water Quality-Based Effluent Limit
µg/L	Micrograms per liter

Appendix C - Development Of Effluent Limitations

This section discusses the basis for and the development of effluent limits in the draft permit including:

Section I. The statutory and regulatory basis for development of effluent limitations
Section II. The development of technology-based effluent limits
Section III. Water quality-based effluent limits
Section IV. A summary of the effluent limits developed for this draft permit

I. Statutory and Regulatory Basis for Limits

Sections 101, 301(b), 304, 308, 401, 402, and 405 of the CWA provide the basis for the effluent limitations and other conditions in the draft permit. The EPA evaluates the discharges with respect to these sections of the CWA and the relevant National Pollutant Discharge Elimination System (NPDES) regulations to determine which conditions to include in the draft permit.

In general, the EPA first determines which technology-based limits must be incorporated into the permit. EPA then evaluates the effluent quality expected to result from these controls, to see if it could result in any exceedances of the water quality standards in the receiving water. If exceedances could occur, EPA must include Water Quality-Based Effluent Limits (WQBELs) in the permit. The proposed permit limits will reflect whichever requirements (technology-based or water quality-based) are more stringent.

II. Technology-based Evaluation

Section 301(b) of the CWA requires technology-based controls on effluents. This section of the CWA requires that, by March 31, 1989, all permits contain effluent limitations which: (1) control toxic pollutants and nonconventional pollutants through the use of "best available technology economically achievable" (BAT), and (2) represent "best conventional pollutant control technology" (BCT) for conventional pollutants by March 31, 1989. In no case may BCT or BAT be less stringent than "best practical control technology currently achievable" (BPT), which is the minimum level of control required by section 301(b) (1) (A) of the CWA.

In many cases, BPT, BCT, and BAT limitations are based on effluent guidelines developed by EPA for specific industries. To date, EPA has not established effluent guidelines specific for the shipyard industry. However, the *Draft Development Document for Proposed Effluent Limitation Guidelines for Shipbuilding and Repair* (EPA 440/1-79/76b) identifies the following pollutant parameters as those which are discharged or have the potential to be discharged to receiving water:

Conventional pollutants: Suspended and settleable solids, oil and grease, pH

Priority pollutant metals: Chromium, copper, lead and zinc
Other metals: Tin

On May 13, 2003 EPA published effluent guidelines for the Metal Products and Machinery Point Source Category. The guidelines included a shipbuilding dry dock subcategory. The guidelines did not establish limitations or standards for facilities in this subcategory, permit writers are directed to establish controls using Best Professional Judgment (BPJ) to regulate wastewater discharges from those facilities.

On November 19, 1982, EPA published effluent guidelines for the Steam Electric Point Source Category (47 FR 52304, Nov. 19, 1982). These guidelines are found in 40 CFR 423. EPA applied the effluent limits to Outfall 021 (treated effluent from the steam generation plant) in the 1994 permit. *Table C - 1: Technology-Based Effluent Limitations for Steam Electric Power Generating Point Source Category Applicable to PSNS* shows the National Effluent Limitation Guidelines (ELGs) applicable to the discharge. The ELGs include effluent limits for cooling tower blowdown before it is commingled with other waste streams. Since the cooling tower blowdown is discharged to the sanitary sewer, those limits do no apply to this permit. The permit prohibits the discharge of cooling tower blowdown. In addition, the ELGs include chlorine limits, since the PSNS does not use chlorine at the steam plant, these limits do not apply to the permit.

Table C - 1: Technology-Based Effluent Limitations for Steam Electric Power Generating Point Source Category Applicable to PSNS

Parameter	Effluent Limitations		Comment
	Daily Maximum	Monthly Average	
TSS, mg/L	100	30	BPT low volume wastestreams
Oil and grease, mg/L	30	15	BPT
Polychlorinated biphenyl compounds	No discharge of compounds such as those commonly found in transformer fluid.		BAT, BPT
pH, su	Within the range 6.0 - 9.0		BPT for all discharges

The permit retains the limits for TSS and oil and grease from the previous permit.

III. Water Quality-based Evaluation

In addition to the technology-based limits discussed above, EPA evaluated the discharges to determine compliance with Section 301(b) (1) (C) of the CWA. This section requires the establishment of limitations in permits necessary to meet water quality standards by July 1, 1977.

The regulations at 40 CFR 122.44(d) implement section 301(b) (1) (C) of the CWA. These regulations require that permits include limits for all pollutants or parameters which "are or may be discharged at a level which will cause, have the reasonable potential to cause, or contribute to an excursion above any state water quality standard, including state narrative criteria for water quality." The limits must be stringent enough to ensure that water quality standards are met, and must be consistent with any available wasteload allocation (WLA).

In determining whether WQBELs are needed and developing those limits when necessary, EPA follows guidance in the *Technical Support Document for Water Quality-based Toxics Control* (*TSD*, EPA 1991). The water quality-based analysis consists of four steps:

1. Determine the appropriate water quality criteria (see Section III.A., below)
2. Determine if there is "reasonable potential" for the discharge to exceed the criteria in the receiving water (see Section III.B.)
3. If there is "reasonable potential", develop a WLA (see Section III.C.)
4. Develop effluent limitations based on the WLA (see Section III.C.)

The following sections provide a discussion of each step. Appendix D provides an example calculation to illustrate how these steps are implemented.

A. Water Quality Criteria

The first step in developing WQBELs is to determine the applicable water quality criteria. For Washington, the State water quality standards are found at WAC 173-201(A). In WAC 173-201A-612, the State has assigned the following specific uses for Sinclair Inlet west of longitude 122°37'W:

- Excellent aquatic life (excellent quality salmonid and other fish migration, rearing, and spawning; clam, oyster, and mussel rearing and spawning; crustaceans, and other shellfish (crabs, shrimp, crayfish, scallops, etc.) rearing and spawning)
- Shellfish (clam, oyster, and mussel) harvesting
- Primary contact recreational use
- Wildlife habitat
- Harvesting (salmonid and other fish harvesting, and crustacean, and other shellfish (crabs, shrimp, scallops, etc.) harvesting)
- Commerce and Navigation
- Boating
- Aesthetic values

For any given pollutant, different uses may have different criteria. To protect all beneficial uses, the permit limits are based on the most stringent of the water quality criteria applicable to those uses. The applicable criteria based on the above uses (i.e. protection of aquatic life, fish and shellfish harvesting, and primary contact recreation) are summarized in *Table C - 2: Aquatic Life*

Criteria through Table 4: *Average Annual Wastewater Volumes Discharged to Surface Water From Dry Dock Activity (in mgd)* below.

Washington's criteria for metals include a "conversion factor" to convert from total recoverable to dissolved criteria. Conversion factors are applicable to both acute and chronic criteria for all metals except mercury. The conversion factor for mercury is applicable to the acute criterion only. Conversion factors address the relationship between the total amount of metal in the water column (total recoverable metal) and the fraction of that metal that causes toxicity (bioavailable metal). Conversion factors are shown in *Table C - 2: Aquatic Life Criteria*.

The Navy has submitted study results for site-specific copper criteria for the facility using the Water Effects Ratio (WER) procedures. A WER is required to be adopted by Washington into rule and submitted and approved by EPA prior to use in an EPA-issued permit. The site specific criteria are not part of this permit reissuance. If site specific criteria are approved for the PSNS, the permit may be reopened and modified to incorporate the site specific criteria.

Table C - 2: Aquatic Life Criteria

Parameter	Acute Criteria[1]	Chronic Criteria[1]	Metal Marine Conversion Factors
Ammonia, un-ionized NH3	233	35	--
Arsenic	69.0	36.0	1.000
Cadmium	42.0	9.3	0.994
Chlorine	13.0	7.5	--
Chromium (VI)	1,100.0	50.0	0.993
Copper	4.8	3.1	0.83
Lead	210.0	8.1	0.951
Mercury[2]	1.8	0.025	0.85
Nickel	74.0	8.2	0.990
Zinc	90.0	81.0	0.946

Notes:
1. The criteria for arsenic, cadmium, chromium, copper, lead, mercury (acute only), nickel, and zinc are expressed as the dissolved fraction of the metal.
2. Conversion factor for mercury is applicable to the acute criteria only.

Source: Ecology, 2006

Table C - 3: Additional Criteria	
Protection of Aquatic Life:	
pH	Within the range of 7.0 to 8.5 with a human-caused variation of less than 0.5 units
Temperature	Shall not exceed 16.0°C (60.8°F). When natural conditions exceed 16.0°C, no temperature increases shall be allowed which will raise the receiving water temperature by greater than 0.3ºC. When the natural condition is cooler than 16.0°C, incremental temperature increases resulting from point source activities must not, at any time, exceed t=12/(T-2), where "T" represents the background temperature. Incremental temperature increases resulting from the combined effect of all nonpoint source activities in the water body must not, at any time, exceed 2.8 °C (5.04°F).
Dissolved Oxygen	Shall exceed 6.0 mg/L. When natural conditions,, such as upwelling, occur, causing the dissolved oxygen to be depressed near or below 6.0 mg/L, natural dissolved oxygen levels may be degraded by up to 0.2 mg/L by human-caused activities.
Turbidity	Shall not exceed 5 NPU over background turbidity when the background turbidity is 50 NTU or less, or have more than a 10 percent increase in turbidity when the background turbidity is more than 50 NTU.
Protection of Human Health	
Fecal Coliform	Fecal coliform organisms levels must not exceed a geometric mean value of 14 colonies/100 ml, and not have more than 10 percent of all samples obtained for calculating the geometric mean value exceeding 43 colonies/100 ml.

Table C - 4: Human Health for Consumption of Organisms	
Parameter	**Criteria (µg/L)** [1]
Arsenic, inorganic	0.14
Mercury	0.15
Nickel	4,600
Bromoform	360
Chloroform	470
Dichlorobromomethane	22
Tetrachloroethylene	8.85
1,2 Dichloroethane	99
1,1 Dichloroethylene	3.2
Bis(2-ethylhexyl)phthalate	5.9
Trichloroethylene	81
Source: 1. EPA, 1992	

B. Reasonable Potential Evaluation

To determine if there is "reasonable potential" to cause or contribute to an exceedence of water quality criteria for a given pollutant (and therefore whether a WQBEL is needed), EPA compares the maximum projected receiving water concentration to the criteria for that pollutant. If the projected receiving water concentration exceeds the criteria, there is "reasonable potential", and a limit must be included in the permit. EPA uses the recommendations in Chapter 3 of the *TSD* to conduct this "reasonable potential" analysis. This section discusses how reasonable potential is evaluated.

The maximum projected receiving water concentration for a pollutant is determined using the following mass balance equation:

$$C_d = C_b + \frac{C_e - C_b}{D} \quad \textit{(Equation 1)}$$

where,

C_d = concentration of pollutant discharge at the edge of the mixing zone
C_b = background concentration of pollutant
C_e = maximum projected effluent concentration
D = dilution

Where no mixing zone is allowed: $C_d = C_e$ *(Equation 2)*

For most of the metals of concern the aquatic life water quality criteria are expressed as dissolved (see *Table C - 2: Aquatic Life Criteria*, footnote 1). Yet effluent concentrations and NPDES permit limits are expressed as total recoverable metals. The dissolved metal is the concentration of an analyte that will pass through a 0.45 micron filter. Total metal is the concentration of an analyte in an unfiltered sample. To account for the difference between total effluent concentrations and dissolved criteria, "translators" are used in the reasonable potential (and permit limit derivation) equations. Translators can either be site-specific numbers or default numbers. EPA guidance related to the use of translators in NPDES permits is found in *The Metals Translator: Guidance for Calculating a Total Recoverable Permit Limit from a Dissolved Criterion* (EPA 823-B-96-007, June 1996). In the absence of site-specific translators, this guidance recommends the use of the water quality criteria conversion factors as the default translators. Because site-specific translators were not available, the conversion factors were used as default translators in the reasonable potential and permit calculations (see *Table C - 2: Aquatic Life Criteria*, column heading: "Metal Marine Conversion Factors). For those metals with criteria expressed as dissolved, Equation 1 becomes:

$$C_d = C_b + \frac{Translator \times C_e - C_b}{D} \quad \textit{(Equation 3)}$$

Equation 2 (where no mixing zone is allowed) becomes:

$$C_d = Translator \times C_e \quad \textit{(Equation 4)}$$

C_e is in the total recoverable form, and C_b is in the dissolved form.

After C_d is determined, it is compared to the applicable water quality criterion. If it is greater than the criterion, there is "reasonable potential" and a WQBEL is developed for that parameter. The following discusses each of the factors used in the mass balance equation to calculate C_d.

<u>C_e (maximum projected effluent concentration)</u>
Per the *TSD*, the maximum projected effluent concentration in the mass balance equation is calculated as the 99th percentile of the expected lognormal distribution of the effluent data . The 99th percentile is calculated using the statistical approach recommended in the *TSD*, i.e., by multiplying the maximum reported effluent concentration by a reasonable potential multiplier (RPM):

$$C_e = (\textit{maximum measured effluent concentration}) \times RPM \qquad \textit{(Equation 5)}$$

The RPM accounts for uncertainty in the effluent data. The RPM depends upon the amount of effluent data and variability of the data as measured by the coefficient of variation (CV) of the data. The RPM decreases as the number of data points increases and the variability of the data decreases. The CV is defined as the ratio of the standard deviation of the data set to the mean. When there are not enough data to reliably determine a CV, the *TSD* recommends using 0.6 as a

default value. Once the CV of the data is determined, the RPM is determined using the statistical methodology discussed in Section 3.3 of the *TSD*.

Q_e (effluent flow): The effluent flows used in the mass balance equations are summarized in *Table C - 5: Wastewater Volumes Discharged Through Dry Dock Outfalls (in mgd)*. The flows are based on flows provided in the NPDES permit renewal application and pumping rates provided by the PSNS.

Table C - 5: Wastewater Volumes Discharged Through Dry Dock Outfalls (in mgd)

Source	Outfall	
	018A, 018B, 096	019
Average Flow:[1]		
Stormwater	0.052	0.018
Miscellaneous dry dock drainage	0.14	0.072
Steam condensate	0.0576	0.0288
Hydrostatic relief water	2.02	4.007
Caisson leakage/salt water	Intermittent	intermittent
Non-contact cooling water for dry dock vessels	0.814	1.103
Building 880 Foundation drainage	Negligible	---
Total Average Daily Flow	3.0996	5.8958
Maximum Measured Flow[2]	7.11	13.64

Sources:
1. Permit application, 9/30/98
2. Pump Data for 6/26/07 and 9/20/06

Dilution (the percent mixing zone based on receiving water flow): Mixing zones are a limited area or volume of water where the discharge plume is progressively diluted by the receiving water. Water quality criteria may be exceeded in the mixing zone as long as acutely toxic conditions are prevented from occurring and the applicable existing designated uses of the water body are not impaired as a result of the mixing zone. Mixing zones are allowed at the discretion of the State, based on the State water quality standards regulations. As discussed under Part V.C Mixing Zones (page 39), a mixing zone is not included in this reissuance.

Reasonable Potential Summary

A summary of the reasonable potential analysis for the dry dock outfalls and Outfall 021 is provided in *Table C - 6: Summary of Data Used to Determine Reasonable Potential Calculations.* Based on the analysis, the dry dock effluent showed reasonable potential to exceed water quality criteria for the following parameters: arsenic, copper, lead, mercury, zinc, and

temperature. Outfall 021 data showed reasonable potential to exceed the water quality criteria for temperature.

To demonstrate the reasonable potential analysis, an example of the reasonable potential determination for copper for Outfall 018A is provided in Appendix D.

Table C - 6: Summary of Data Used to Determine Reasonable Potential Calculations

Parameter	Maximum Effluent Concentration (µg/L)	Coeff. of Variation (CV)	Number of Samples	Reasonable Potential Multiplier	Maximum Projected Effluent Conc. (µg/L)	Reasonable Potential		
						Acute	Chronic	Human Health
Outfalls 018A, 018B, and 096								
Arsenic	3.40	0.60	4	4.74	16.10	no	no	yes
Copper	108	0.88	85	1.71	153	yes	yes	--
Lead	17	0.60	4	4.74	77	no	yes	--
Mercury	0.46	0.60	4	4.74	1.85	yes	yes	--
Zinc	48	0.60	4	4.74	215	yes	yes	--
Bromoform	0.40	0.60	4	4.74	1.89	--	--	no
Chloroform	2.40	0.60	4	4.74	1.89	--	--	no
Dichlorobromo -methane	0.20	0.60	4	4.74	0.95	--	--	no
Tetrachloro-ethylene	0.90	0.60	4	4.74	4.26	--	--	no
Trichloro-ethylene	1.90	0.60	4	4.74	9.00	--	--	no
Temperature	18.2° C	0.14	94	1.1	20.0° C	--	yes	--
Outfall 019								
Arsenic	1.80	0.60	4	4.74	8.52	no	no	yes
Copper	88	0.81	53	1.96	143	yes	yes	--
Lead	4	0.60	4	4.74	18	no	yes	--
Mercury	0.40	0.60	4	4.74	1.61	no	yes	--
Zinc	49	0.60	4	4.74	220	yes	yes	--
Temperature	16.7° C	0.11	64	1.1	18.3° C	--	yes	--
Outfall 021								
Chloroform	14.18 µg/L	0.60	1	13.2	187 µg/L	--	--	no
Temperature	30° C	0..24	65	1.22	37° C	--	yes	--

C. Water Quality-Based Permit Limit Derivation

Once EPA has determined that a WQBEL is required for a pollutant, the first step in developing the permit limit is development of a WLA for the pollutant. A WLA is the concentration (or loading) of a pollutant that the permittee may discharge without causing or contributing to an exceedence of water quality standards in the receiving water. WLAs and permit limits are derived based on guidance in the *TSD*.

The WLAs are then converted to long-term average concentrations (LTAs) and compared. The most stringent LTA for each parameter is converted to effluent limits. This section describes each of these steps.

Calculation of WLAs: Where the state authorizes a mixing zone for the discharge, the WLA is calculated as a mass balance, based on the available dilution, background concentration of the pollutant, and the water quality criterion. WLAs are calculated using the same mass balance equation used in the reasonable potential evaluation (see Equation 1). However, C_d becomes the criterion and C_e the WLA. Making these substitutions, Equation 1 is rearranged to solve for the WLA, becoming:

$$WLA = D \times (Criteria - C_b) + C_b \quad \textit{(Equation 6)}$$

where,

C_d = concentration of pollutant discharge at the edge of the mixing zone
C_b = background concentration of pollutant
C_e = maximum projected effluent concentration
D = dilution

As discussed previously, the aquatic life criteria for some metals are expressed as dissolved. However, the NPDES regulations require that metals limits be based on total recoverable metals (40 CFR 122.45(c)). This is because changes in water chemistry as the effluent and receiving water mix could cause some of the particulate metal in the effluent to dissolve. Therefore, a translator is used in the WLA equation to convert the dissolved criteria to total. The translator is the same translator discussed in the reasonable potential evaluation in the previous section (the criteria conversion factors are used as the default translators). For criteria expressed as dissolved a translator is included in Equation 6 and the WLA is calculated as:

$$WLA = \frac{D \times (Criterion - C_b) + C_b}{Translator} \qquad \textit{(Equation 7)}$$

Where no mixing zone is allowed, the criterion becomes the WLA. Establishing the criterion as the WLA ensures that the permittee does not contribute to an exceedence of the criteria.

no mixing zone: *WLA = criterion* *(Equation 8)*

WLA = criterion/translator *(for criteria expressed as dissolved)* *(Equation 9)*

WLAs for the parameters that exhibited reasonable potential for each outfall are provided in *Table C - 7: Summary of Permit Limit Derivation*. Appendix D (see Step 3) provides an example of how the WLAs for copper in Outfall 018 were developed.

Table C - 7: Summary of Permit Limit Derivation

Parameter	Wasteload Allocation		Long Term Average			MDL	AML
	Acute	Chronic	Acute	Chronic	Limiting LTA		
Outfalls 018A, 018B, and 096							
Arsenic	69	36	22	19	chronic	59	30
Arsenic (human health)	--	0.14	--	0.07	chronic	0.23	0.16
Copper	5.8	3.7	1.3	1.5	acute	5.8	2.4
Lead	221	9	71	4	chronic	14	7
Mercury	2.12	0.03	0.68	0.02	chronic	0.05	0.02
Zinc	95	86	31	45	acute	95	47
Outfalls 019							
Arsenic	69	36	22	19	chronic	59	29
Arsenic (human health)	--	0.14	--	0.07	chronic	0.23	0.16
Copper	5.8	3.7	1.4	1.6	acute	5.8	2.5
Lead	221	9	71	4	chronic	14	7
Mercury	2.12	0.03	0.68	0.02	chronic	0.05	0.02
Zinc	95	86	31	45	acute	95	47

Calculation of LTAs: As discussed above, WLAs are calculated for each parameter for each criterion. Because the different criteria (acute aquatic life, chronic aquatic life, human health) apply over different time frames and may have different mixing zones, it is not possible to compare the criteria or the WLAs directly to determine which criterion results in the most stringent limits. For example, the acute criteria are applied as a one-hour average and may have a smaller (or no) mixing zone, while the chronic criteria are applied as a four-day average and may have a larger mixing zone.

To allow for comparison, the acute and chronic aquatic life criteria are statistically converted to LTA concentrations. This conversion is dependent upon the CV of the effluent data and the probability basis used. The probability basis corresponds to the percentile of the estimated concentration. EPA uses a 99th percentile for calculating a long-term average, as recommended in the *TSD*. The following equation from Chapter 5 of the *TSD* is used to calculate the LTA concentrations (alternately, Table 5-1 of the *TSD* may be used):

$$LTA = WLA \times \exp[0.5\sigma^2 - z\sigma] \qquad \text{(Equation 10)}$$

where: σ^2 = $\ln(CV^2 + 1)$ for acute aquatic life criteria
= $\ln(CV^2/4 + 1)$ for chronic aquatic life criteria
CV = coefficient of variation
z = 2.326 for 99th percentile probability basis, per the *TSD*

Calculation of Effluent Limits: The LTA concentration is calculated for each criterion and compared. The most stringent LTA concentration is then used to develop the maximum daily (MDL) and average monthly (AML) permit limits. The MDL is based on the CV of the data and the probability basis, while the AML is dependent upon these two variables and the monitoring frequency. As recommended in the *TSD*, EPA used a probability basis of 95 percent for the AML calculation and 99 percent for the MDL calculation. The MDL and AML are calculated using the following equations from the *TSD* (alternately, Table 5-2 of the *TSD* may be used):

$$MDL \text{ or } AML = LTA \times \exp[z\sigma - 0.5\sigma^2] \qquad \text{(Equation 11)}$$

for the MDL: $\sigma^2 = \ln(CV^2 + 1)$
z = 2.326 for 99th percentile probability basis, per the *TSD*

for the AML: $\sigma^2 = \ln(CV^2/n + 1)$
n = number of sampling events required per month
z = 1.645 for 95th percentile probability basis, per the *TSD*

For setting WQBELs for protection of human health uses, the *TSD* recommends setting the AML equal to the WLA, and then calculating the MDL (i.e., no calculation of LTAs). The human health MDL is calculated based on the ratio of the AML and MDL as expressed by Equation 11. The MDL, therefore, is based on effluent variability and the number of samples per month. AML/MDL ratios are provided in Table 5-3 of the *TSD*.

The WQBELs developed for each outfall for each parameter that exhibited reasonable potential are shown in *Table C - 7: Summary of Permit Limit Derivation*. The table also shows intermediate calculations (i.e., WLAs, LTAs) used to derive the effluent limits. Appendix D shows an example of the permit limit calculation for copper in Outfall 001 (see Steps 3 and 4).

IV. Summary of Draft Permit Effluent Limitations

The final effluent limits in the draft permit are summarized in *Table C - 8: Effluent Limits Dry Docks Outfalls* and *Table C - 9: Effluent Limits Steam Generation Plan (Outfall 021)*. The permit retains the oil and grease and TSS limits from the previous permit.

Table C - 8: Effluent Limits Dry Docks Outfalls

Parameter	Outfalls 018A, 018B, 096, AAA and BBB		Outfalls 019	
	Maximum Daily	Average Monthly	Maximum Daily	Average Monthly
Copper, total recoverable	5.8 µg/L	2.4 µg/L	5.8 µg/L	2.5 µg/L
	0.34 lb/day	0.14 lb/day	0.66 lb/day	0.28 lb/day
Lead, total recoverable	14 µg/L	7 µg/L	14 µg/L	7 µg/L
	0.83 lb/day	0.42 lb/day	1.59 lb/day	0.80 lb/day
Mercury, total recoverable	0.048 µg/L	0.024 µg/L	0.048 µg/L	0.024 µg/L
	0.003 lb/day	0.001 lb/day	0.005 lb/day	0.003 lb/day
Zinc, total recoverable	95 µg/L	47 µg/L	95 µg/L	47 µg/L
	5.6 lb/day	2.8 lb/day	10.8 lb/day	5.4 lb/day
Arsenic, total recoverable	0.23 µg/L	0.16 µg/L	0.23 µg/L	0.16 µg/L
	0.014 lb/day	0.009 lb/day	0.026 lb/day	0.018 lb/day
Temperature	16° C	---	16° C	---
Oil and Grease	15 mg/L	10 mg/L	15 mg/L	10 mg/L
Total Residual Chlorine	12 µg/L	6.1 µg/L	12 µg/L	6.1 µg/L
	0.71 lb/day	0.36 lb/day	0.71 lb/day	0.36 lb/day
Turbidity	5 NTU above background	----	5 NTU above background	----

Table C - 9: Effluent Limits Steam Generation Plan (Outfall 021)

Parameter	Maximum Daily	Average Monthly
Temperature	16° C	---
Oil and Grease	15 mg/L	10 mg/L
	10 lb/day	7 lb/day
TSS	100 mg/L	30 mg/L
	68 lb/day	21 lb/day
pH, su	Between 7.0 to 8.5	

The effluent limitations thus far have been expressed in terms of concentration. However, with a few exceptions, the NPDES regulations (40 CFR 122.45(f)) require that effluent limits also be expressed in terms of mass. The following equation is used to convert the concentration-based limits into mass-based limits:

mass limit (lb/day) = concentration limit (µg/L) x effluent flow rate x conversion factor *(Equation 12)*

where,

conversion factor = 0.00834 (to convert units on the right side of the equation to lb/day)
effluent flow rate = maximum discharge rate in mgd

The above equation was used to calculate mass-based limits for the dry dock and steam generation plant outfalls. The effluent flow used in the calculation was equal to the maximum measured flow (7.11 mgd for Outfalls 018A, 018B, and 096 and 13.64 mgd for Outfall 019), see *Table C - 5: Wastewater Volumes Discharged Through Dry Dock Outfalls (in mgd).* Mass-based limits for these outfalls are shown in *Table C - 8: Effluent Limits Dry Docks Outfalls* and *Table C - 9: Effluent Limits Steam Generation Plan (Outfall 021)*.

Stormwater Final Effluent Limits

The stormwater effluent limits are based on acute aquatic life criteria, not chronic or human health criteria. The most likely critical storm water conditions would be a high intensity short duration storm event that occurs after a long period of no rain. Under this scenario, the stormwater has the highest potential to mobilize pollutants. Acute exposure would be most likely, since the acute criteria are one-hour concentrations not to be exceeded more than once every three years. The chronic criteria are four-day averages not to be exceeded more than once every three years. The human health criteria are based on ingestion of the organisms. EPA does not expect significant chronic effects from the stormwater discharges because of the generally short duration of storm events. The WQBELs for stormwater are in terms of the total recoverable water quality criteria.

Appendix D - Example Water Quality-Based Effluent Limits Calculation

This appendix demonstrates how the water quality-based analysis (reasonable potential determination and development of effluent limits) that was described in Appendix C was performed using copper and Outfall 018A as an example.

Step 1: Determine the applicable water quality criteria.

Applicable water quality criteria for copper in Outfall 018A are provided in *Table C - 2: Aquatic Life Criteria*:

aquatic life acute = 4.8 µg/L (expressed as dissolved)
aquatic life chronic = 3.1 µg/L (expressed as dissolved)

Step 2: Determine if there is reasonable potential (RP) for the discharge to exceed the criteria in the receiving water.

To determine reasonable potential, the maximum projected receiving water concentration (C_d) is compared to the applicable water quality criterion. If C_d exceeds the criterion, then reasonable potential exists and a WQBEL is established. Since the copper criteria are expressed as dissolved and a mixing zone is allowed, C_d is determined with Equation 4.

$$C_d = Translator \times C_e \quad (Equation\ 4)$$

The values for the parameters in the above equation are:

Translator: The water quality criteria conversion factor is used as the translator. From *Table C - 2: Aquatic Life Criteria*, for copper the translator is equal to 0.83.

C_e: The maximum projected effluent concentration. This is determined via Equation C - 5:

$$C_e = (maximum\ measured\ effluent\ concentration) \times RPM \qquad (Equation\ 5)$$

The maximum measured effluent concentration for Outfall 018A is equal 108 µg/L (expressed as total).

Using the equations in section 3.3.2. of the *TSD*, a RPM of 1.71 is calculated as follows:

From effluent data:

Mean = 18.582
Standard Deviation = 16.34

Number of samples = 85

Therefore,

CV = 16.34 ÷ 18.58 = 0.88

p_n = (1 - confidence level)$^{1/n}$

where,

p_n = the percentile represented by the highest concentration
n = the number of samples

p_n = $(1-0.99)^{1/85}$
p_n = 0.95

This means that at the 99 percent confidence level, the largest value of the 85 samples is greater than the 95 percentile.

Next, the ratio of the 99th percentile to the 95th percentile is calculated, based on the equation:

$C_p = \exp(z\sigma - 0.5\sigma^2)$

where,

$\sigma^2 = \ln(CV^2 + 1)$
CV = coefficient of variation (= 0.88)
σ^2 = 0.76

z = normal distribution value
= 2.326 for the 99th percentile
= 1.62 for the 95th percentile

$C_{99} = \exp(2.326 \times 1.62 - 0.5 \times 0.76)$
= 4.37

$C_{95} = \exp(1.62 \times 1.62 - 0.5 \times 0.76)$
= 2.56

RPM = C_{99}/ C_{95}
= 4.37 ÷ 2.56 = 1.71

Therefore, C_e is calculated as:

$$C_e = 108\ \mu g/L \times 1.71 = 184\ \mu g/L$$

Now plug the above values into Equation 4 and solve:

$$C_d = 0.83 \times 184\ \mu g/L = 153\ \mu g/L$$

Since the maximum projected receiving water concentration (C_d = 153 µg/L) exceeds the acute aquatic life criterion (4.8 µg/L), there is reasonable potential for the effluent to cause an exceedence to the water quality standard, and a WQBEL is required. The maximum projected receiving water concentration (C_d = 153 µg/L) also exceeds the chronic aquatic life criterion (3.1 µg/L).

NOTE: If reasonable potential exists to exceed any one of the criteria for a particular parameter, then water-quality based effluent limits are required for that parameter.

Step 3: Since there is reasonable potential, determine the wasteload allocation (WLAs).

Since the applicable criteria are expressed as dissolved, the WLAs for copper in Outfall 018 are calculated using Equation 9:

WLA = criterion ÷ translator (Equation 9)

The variables in the WLA equation have already been defined in Steps 1 and 2. Plugging these into Equation 9 and solving:

Determination of the WLA for protection of acute aquatic life:

$$WLA_{acute} = 4.8 \div 0.83 = 5.78\ \mu g/L$$

Determination of the WLA for protection of chronic aquatic life:

$$WLA_{chronic} = 3.1 \div 0.83 = 3.73\ \mu g/L$$

These WLAs are shown in *Table C - 7: Summary of Permit Limit Derivation*.

Step 4a: Develop LTAs based on the WLAs.

Effluent limits are developed by converting the aquatic life WLAs to LTAs. The most stringent of the acute or chronic LTA is then used to develop the effluent limits. The aquatic life WLAs are converted to LTAs using Equation 10:

$LTA = WLA \times exp[0.5\sigma^2 - z\sigma]$ *(Equation 10)*

where,

z = 2.326 for 99th percentile probability basis (per the *TSD*)
CV = 0.88
for acute criteria, $\sigma^2 = \ln(CV^2 + 1) = \ln(0.88^2 + 1) = 0.573$; $\sigma = 0.757$
for chronic criteria, $\sigma^2 = \ln(CV^2/4 + 1) = \ln(0.88^2/4 + 1) = 0.177$; $\sigma = 0.421$

Plugging the above values and the WLAs from step 3 into Equation 10 and solving:

$LTA_{acute} = (5.78) \times exp\ [0.5(0.573) - (2.326)(0.757)] = 1.32\ \mu g/L$

$LTA_{chronic} = (3.73) \times exp\ [0.5(0.177) - (2.326)(0.421)] = 1.53\ \mu g/L$

These LTA concentrations are also shown in *Table C - 7: Summary of Permit Limit Derivation*. Since the LTA concentration based on the acute criterion is more stringent than the LTA based on the acute criterion, the chronic LTA is used to derive the aquatic life effluent limits for copper (see Step 4b, below).

<u>Step 4b: Develop Effluent Limits Based on the LTA.</u>

The most stringent LTA concentration is converted to a MDL and an AML via Equation 11:

$MDL, AML = LTA \times exp[z\sigma - 0.5\sigma^2]$ (Equation 11)

where,

for the MDL: z = 2.326 for 99th percentile probability basis (per the *TSD*)
$\sigma^2 = \ln(CV^2 + 1) = \ln(0.88^2 + 1) = 0.573$; $\sigma = 0.757$

for the AML: z = 1.645 for 95th percentile probability basis (per the *TSD*)
$\sigma^2 = \ln(CV^2/n + 1) = \ln(0.88^2/4 + 1) = 0.177$; $\sigma = 0.421$
since, n = number of samples per month = 4
(monthly monitoring for copper in Outfall 018)

Substituting the above values and the lowest LTA concentrations from Step 4a into Equation 11 and solving:

$MDL = (1.32)\ exp\ [(2.326)(0.757) - 0.5\ (0.573)] = 5.78\ \mu g/L$

$AML = (1.32)\ exp\ [(1.645)(0.421) - 0.5\ (0.177)] = 2.42\ \mu g/L$

These are the copper effluent limits for Outfall 018 in the draft permit (see also *Table C - 7: Summary of Permit Limit Derivation* and *Table C - 8: Effluent Limits Dry Docks Outfalls*).

Appendix E - Endangered Species Act

Section 7 of the Endangered Species Act (ESA) requires federal agencies to consult with National Oceanic and Atmospheric Administration Fisheries (NOAA) Fisheries and the U.S. Fish and Wildlife Service regarding potential effects an action may have on listed endangered species.

<<To Be Added>>