~~363175~~

912496

February 2004

25290-000-0000

PHASE II
ENVIRONMENTAL SITE ASSESSMENT
J-PIT REDEVELOPMENT AREA
GARY, INDIANA

Prepared for

CITY OF GARY

Department of Environmental Affairs

504 Broadway, Suite 1012
Gary, Indiana 46402

Prepared by

Baker Environmental, Inc.

5261 Fountain Drive
Suite A
Crown Point, Indiana 46307

Prepared by

Baker

Baker
Environmental, Inc.
Crown Point, Indiana

February 2004

25290-000-0000

PHASE II
ENVIRONMENTAL SITE ASSESSMENT
J-PIT REDEVELOPMENT AREA
GARY, INDIANA

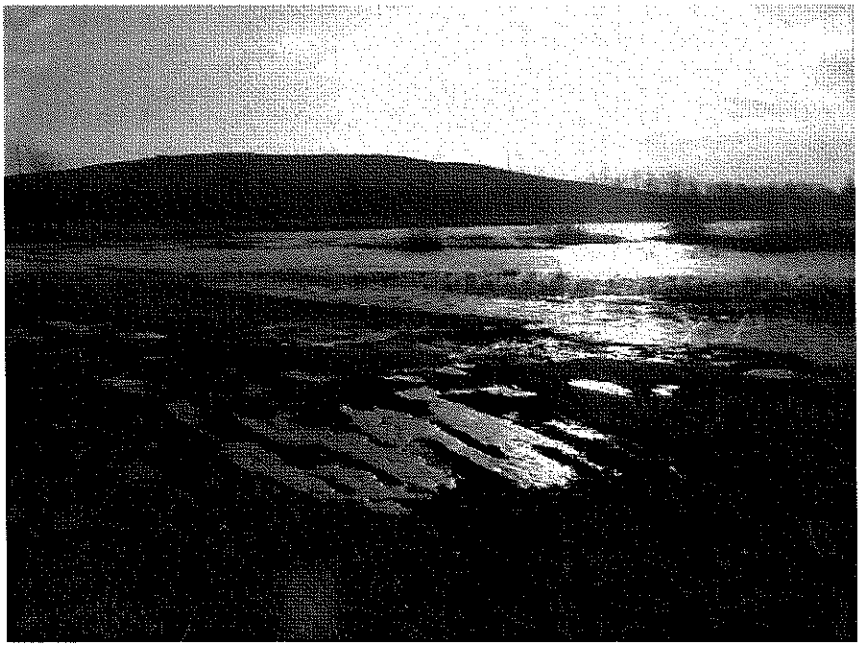

Prepared for

CITY OF GARY

Department of Environmental Affairs

504 Broadway, Suite 1012
Gary, Indiana 46402

Prepared by

Baker Environmental, Inc.

5261 Fountain Drive
Suite A
Crown Point, Indiana 46307

Prepared by

Baker
Environmental, Inc.
Crown Point, Indiana

PHASE II ENVIRONMENTAL SITE ASSESSMENT
J-PIT REDEVELOPMENT AREA, GARY, INDIANA

TABLE OF CONTENTS

		Page
List of Acronyms		v
1.0	**INTRODUCTION**	**1-1**
1.1	Site Background and Setting	1-2
1.1.1	Historical Aerial Photograph Review	1-3
1.1.2	Summary of Previous Phase I ESAs	1-3
1.2	Summary of V3 Ecological Assessment	1-5
1.3	Site Geology/Hydrogeology	1-8
1.4	Phase II ESA Workplans	1-9
2.0	**SAMPLE METHODOLOGY**	**2-1**
2.1	Mobilization	2-1
2.2	Surface Soil Sampling	2-2
2.3	Subsurface Soil Sampling	2-2
2.4	Test Trenching	2-3
2.5	Sediment Sampling	2-3
2.6	Surface Water Sampling	2-4
2.7	Well Installation/Development	2-4
2.8	Groundwater Sampling	2-5
2.9	Alternate Low Flow Sampling Method	2-6
2.10	Decontamination and Waste Handling	2-6
2.11	Quality Assurance/Control Samples	2-7
2.12	Sample Numbering	2-7
2.13	Chain of Custody, Sample Packing and Shipping	2-8
2.14	Documentation	2-8
2.15	Field Change and Corrective Action	2-9
2.16	Field Instrument Calibration	2-9
2.17	Preservation	2-9
2.18	Analytical Methods	2-9
3.0	**SITE INVESTIGATION ACTIVITIES**	**3-1**
3.1	Pilot Section 1	3-1
3.1.1	Soil Sampling	3-1
3.1.2	Groundwater Sampling	3-2

PHASE II ENVIRONMENTAL SITE ASSESSMENT
J-PIT REDEVELOPMENT AREA, GARY, INDIANA

TABLE OF CONTENTS (Continued)

Page

3.2 Pilot Section 2 3-2
3.2.1 Soil Sampling 3-2
3.2.2 Groundwater Sampling 3-3
3.2.3 Test Trenches 3-4
3.3 Pilot Section 3 3-4
3.3.1 Soil Sampling 3-4
3.3.2 Groundwater Sampling 3-5
3.4 Pilot Section 4 3-5
3.4.1 Soil Sampling 3-5
3.4.2 Groundwater Sampling 3-6
3.5 Greenspace Section 5 3-7
3.5.1 Soil Sampling 3-7
3.5.2 Groundwater Sampling 3-7
3.5.3 Sediment and Surface Water Sampling 3-8
3.6 Paul's Auto Yard (Lead and Other RCRA Metals Investigation) 3-9
3.7 Alternate Low Flow Sampling Evaluation 3-10
3.8 Site Survey 3-10

4.0 RESULTS 4-1

4.1 Pilot Section 1 4-2
4.1.1 Soil Results 4-2
4.1.2 Groundwater Results 4-2
4.2 Pilot Section 2 4-3
4.2.1 Soil Results 4-3
4.2.2 Groundwater Results 4-4
4.3 Pilot Section 3 4-5
4.3.1 Soil Results 4-5
4.3.2 Groundwater Results 4-6
4.4 Pilot Section4 4-7
4.4.1 Soil Results 4-7
4.4.2 Groundwater Results 4-8
4.5 Greenspace Section 5 4-9
4.5.1 Subsurface Soil Results 4-9
4.5.2 Surface Soil Results 4-9
4.5.3 Surface Water Results 4-9
4.5.4 Sediment Results 4-10
4.5.5 Groundwater Results 4-10
4.6 Paul's Auto Yard Lead/Metal Investigation Results 4-11
4.7 Low Flow Sampling Evaluation Results 4-12

PHASE II ENVIRONMENTAL SITE ASSESSMENT
J-PIT REDEVELOPMENT AREA, GARY, INDIANA

TABLE OF CONTENTS (Continued)

Page

4.8 Sample Validation 4-13
4.8.1 Data Quality 4-13
4.8.2 Data Usability 4-14
4.8.3 Analytical Data Quality 4-15
4.8.4 Relative Percent Difference 4-16
4.8.5 Data Quality Indicators 4-17
4.8.6 QA/QC Sample Results 4-17
4.8.7 Matrix Spike/Matrix Spike Duplicate Samples 4-18
4.8.8 Trip Blanks 4-19
4.8.9 Equipment Rinsate Blanks 4-20
4.9 Geology and Hydrogeology 4-20
4.9.1 Site Geology 4-20
4.9.2 Site Hydrogeology 4-22

5.0 CONCLUSIONS 5-1

5.1 Remediation Contaminants of Concern 5-2
5.2 Nature and Extent of Contamination 5-2
5.2.1 Soil 5-2
5.2.2. Groundwater 5-5
5.2.3 Summary 5-7
5.3 Conceptual Site Model 5-7
5.3.1 Human Health CSM 5-9
5.3.2 Ecological CSM 5-10
5.4 Contaminant Fate and Transport 5-11
5.4.1 Characteristic of Reactivity 5-11
5.4.2 Characteristics of Toxicity 5-11
5.4.3 RCOC Characteristics 5-12
5.4.4 Fate and Transport Assessment 5-18
5.5 Recommendations 5-19

6.0 REFERENCES 6-1

PHASE II ENVIRONMENTAL SITE ASSESSMENT
J-PIT REDEVELOPMENT AREA, GARY, INDIANA

TABLE OF CONTENTS (Continued)

TABLES

Table 1	Paul's Auto Yard Sampling Log
Table 2	Surface Soil Analytical Results
Table 3	Subsurface Soil Analytical Results
Table 4	Sediment Analytical Results
Table 5	Surface Water Analytical Results
Table 6	Groundwater Analytical Results, Round 1
Table 7	Groundwater Analytical Results Round 2
Table 8	Paul's Auto Yard Lead/RCRA Metal Results
Table 9	Duplicate Sample Comparisons
Table 10	Low Flow Sampling Evaluation Results
Table 11	Groundwater Elevations

FIGURES

Figure 1	Site Location Map
Figure 2	Site Map
Figure 3	Sample/Monitoring Well Location Map
Figure 4	Test Pit Cross Section Diagrams
Figure 5a	Groundwater Contour Map November 2002
Figure 5b	Groundwater Contour Map April 2003
Figure 5c	Groundwater Contour Map July 2003
Figure 6	RISC Soil and Sediment Exceedances
Figure 7	Surface and Groundwater Exceedances
Figure 8	VRP Soil and Sediment Exceedances
Figure 9	Soil Sampling for Lead Results
Figure 10	CSM Human Health Risk Evaluation
Figure 11	CSM Ecological Risk Evaluation

APPENDICES

Appendix A	Boring Logs/ Well Construction Diagrams
Appendix B	Laboratory Reports
Appendix C	MSDS and EPA Fact Sheets

LIST OF ACRONYMS

ACOE	Army Corps of Engineers
ASTM	American Society for Testing and Materials
BAKER	Baker Environmental, Inc.
bgs	below ground surface
BTEX	Benzene, Toluene, Ethylbenzene and xylene
COC	Chain of Custody
CSM	Conceptual Site Model
DNPL	Dense Non aqueous Phase Liquid
DOEA	Department of Environmental Affairs
EPRI	Electric Power Research Institute
ESA	Environmental Site Assessment
HASP	Health and Safety Plan
IDEM	Indiana Department of Environmental Management
LNPL	Light, Non aqueous Phase Liquid
LUST	Leaking Underground Storage Tank
MSDS	Material Safety Data Sheet
MS/MSD	Matrix Spike/Matrix Spike Duplicate
MTBE	Methyl-t-butyl ether
NA	Not Applicable
ND	Non-Detect
OSHA	Occupational Safety and Health Administration
PCE	Perchloroethylene
PID	Photoionization Detector
PNA	Polynuclear Aromatic Hydrocarbon
PPE	Personal Protective Equipment
PVC	Polyvinyl Chloride
QA/QC	Quality Assurance/Quality Control
QAPP	Quality Assurance Project Plan
RCOC	Remediation Contaminants of Concern
RO	Remediation Objectives
RCRA	Resource Conservation and Recovery Act
REC	Recognized Environmental Condition
RISC	Risk Integrated System of Closure
SAP	Sampling and Analysis Plan

LIST OF ACRONYMS

SCS	Soil Conservation Service
SHSC	Site Health and Safety Coordinator
SIMA	SIMALABS International
SOP	Standard Operating Procedure
SVOC	Semi-volatile Organic Compound
TCE	Trichloroethane
TCLP	Total Characteristic Leachability Procedure
TDS	Total Dissolved Solids
TRI	Toxic Release Inventory
USDA	United States Department of Agriculture
USEPA	United States Environmental Protection Agency
VOC	Volatile Organic Compound
VRP	Voluntary Remediation Program

SECTION 1.0

1.0 INTRODUCTION

Baker Environmental Inc. (Baker) has prepared this Phase II Environmental Site Assessment (ESA) Report of the J-Pit Redevelopment Area (J-Pit) on behalf of the City of Gary Department of Environmental Affairs (Gary DOEA). This project was developed through the Gary DOEA under a Brownfields Assessment Demonstration Pilot Grant from the United States Environmental Protection Agency (USEPA).

The goal of the J-Pit project is to work with the City's partners to identify, assess, and redevelop local brownfields within the 215-acre J-Pit site, located within the overall 8,200-acre Airport Development Zone. The J-Pit is comprised of five Sections. Sections 1, 2, 3 and 4 comprise the Pilot Sections, which include approximately 100 total acres of abandoned and undeveloped property. Section 5 is an approximately 114-acre former sand mine known as the Greenspace Section.

The J-Pit Redevelopment Project is intended to evaluate the 215-acre site for potential multipurpose usage. While the J-Pit site has been entered into the Indiana Voluntary Remediation (VRP) program, under the 1996 VRP Resource Guide rules, the City of Gary has the option to proceed under the Indiana Brownfield Program. Therefore, the Gary DOEA has elected to evaluate the Phase II ESA data to both the 1996 VRP and Indiana Department of Environmental Management (IDEM) Risk Integrated System of Closure (RISC) default cleanup goals for potential residential and commercial land use.

As part of the City's plans to evaluate potential redevelopment of the J-Pit, environmental and ecological assessments were required. The initial investigative process has been divided into four segments:

- A Phase I ESA performed by Environmental Design International of Gary, Indiana in July 2001;
- A Baseline Ecological Assessment performed by V3 Consultants of Woodridge, Illinois in October 2003;
- Phase II ESA Workplans provided by Baker Environmental, Inc. in June 2002; and
- A Phase II ESA (the subject of this report) performed by Baker Environmental, Inc. in February 2004.

The following Phase II ESA Report presents the site history and setting, a brief summary of previous site documents, investigation methods, results and conclusions.

1.1 Site Background and Setting

The following subsections provide a description of the site location, history and background.

The J-Pit is located in an area of mixed usage including residential, industrial, commercial and undeveloped properties (see Figures 1 and 2). The Phase I ESA divided the J-Pit into five sections: the Pilot Sections 1 through 4, and the Greenspace Section 5.

The 215-acre J-Pit area is located west of Burr Street, south of 15th Avenue, east of the E.J.& E. Railroad and north of 23rd Avenue in Gary (Calumet Township), Lake County, Indiana. The J-Pit is within Sections 11, 12, 13 and 14; Township 36 North; Range 9 West of the Third Principal Meridian. The general property descriptions for each of the five Pilot Sections and the Greenspace Section are provided below:

- Pilot Section 1: This section consists of approximately 15 acres of undeveloped, wooded land with minor scattered debris. The section is bounded to the west by Hobart Street, to the north by 15th Avenue, to the east by Dallas Street, to the southeast by the closed Gary Municipal Landfill and to the southwest by the former sand mine (Greenspace Section 5).

- Pilot Section 2: This section consists of approximately 23 acres covered with trees and grasses. While several streets were extended into the section, it was not developed. The section is located south of the former sand mine (Greenspace Section 5) and is bound to the south by 22nd Avenue, to the east by Colfax Street, to the north by 21st Avenue, and to the west by Fairbanks Street. The eastern one/fourth of the section was the site of the former Paul's Auto Yard.

- Pilot Section 3: This section lies directly south of the closed Gary Landfill and consists of approximately 27 acres. The northern 22 acres of the site were part of the former Paul's Auto Yard operations and is covered with fill material, small piles of construction debris and scrub

vegetation. A small potential wetland is located in the southern 5 acres of the section. The section is bound to the west by Colfax Street, Hamlin Street and King Street; to the south by 23rd Avenue; to the north by 21st Avenue; and to the east by Calhoun Street.

- Pilot Section 4: Is an undeveloped parcel that contains a potential 12 acre wetland area is located in the southern portion of the roughly 36 acre section. A small barrow sand pit is located along the northern side. The site is bound to the north by the Greenspace, to the south by 23rd Avenue, to the east by Fairbanks Street, and to the west by the EJ&E Railroad line.

- Greenspace Section 5: This section is a former sand mine and encompasses roughly 114 acres. The section is actively dewatered as part of the landfill hydraulic control system with a extraction pump located on the western side. Shallow water-filled ditches run through the section to the dewatering pumps. A leachate collection berm/system is located along the eastern border of the parcel. The entire perimeter of the section is fenced to prevent trespassing. The section is bound to the north by 19th Avenue, to the south by 21st Avenue, to the west by EJ&E Railroad Line, and to the east by Colfax Avenue.

1.1.1 Historic Aerial Photograph Review

As part of the site background evaluation, Baker reviewed aerial photographs from 1938, 1958, 1965, 1973, 1987 and 1992. The photos were acquired from the records of the Soil Conservation District for Lake County, Indiana. The photographs appear to show the following site developments:

- 1938 - the site was part of a largely undisturbed dune and swale topography typical of the majority of the region.
- 1958 - the former sand mine (Greenspace Section 5) and the Gary Municipal Landfill were visible and apparently active.
- Subsequent photographs indicate periodic flooding of the former sand mine, and the emergence of both industrial and commercial development in the surrounding area.
- 1987 - construction debris and fill material piles were evident in Section 3. The surrounding properties (Pilot Sections 1 through 4) appear to have remained largely undeveloped, with the exception of pre-subdivision development roadways in Section 2, and various commercial businesses along Colfax Avenue.

- 1987 and 1992 - the former Paul's Auto Yard was active in the eastern portion of Section 2 and northern portion of Section 3.

1.1.2 Summary of Previous Phase I ESAs

Individual Phase I ESA reports were prepared for each of the four Pilot Sections and the Greenspace Section, for a total five reports. Several Recognized Environmental Conditions (RECs) were documented in the Phase I ESA Reports. In general, some level of Phase II ESA sampling was recommended for all five of the Sections due to their proximity to the closed Gary Municipal Landfill, two Superfund sites (Midco I and 9th Avenue Dump), and several Leaking Underground Storage Tank (LUST) sites. Specific RECs were also reported within the Sections as outlined below:

- Pilot Section 1: Although the parcel was predominantly vacant, two small buildings were observed on the west side (south of 15th Avenue) in an area historically used as a junkyard; surface and buried refuse, tires, an old bus, metal, plastic, and empty 55-gallon drums were observed.

- Pilot Section 2: Structures and scattered piles of debris were observed on the northeast side in the area of the former Paul's Auto Yard (a scrap yard once located at 2124 Colfax); and LeRoy's Used Cars (previously located at 2150 Colfax). The piles included shredded tires, two empty 55-gallon drums. Scrap metal and scattered rubbish was observed along the boundary line with the former sand mine area to the north.

- Pilot Section 3: The north and northwest portions of this parcel were reportedly used for car repairs and dumping. There is an approximately 1,200-foot common property line with the Gary Municipal Landfill, which did not have a slurry wall/barrier until 1990. Active junkyards are located adjacent to the southwest property line. The Bivona, Inc. site is located along the southeast property line and is currently enrolled in the IDEM VRP and listed on the Toxic Release Inventory (TRI) for trichloroethane (TCE). Debris, scattered piles of rubbish, shredded tires, and stressed vegetation was observed at various locations throughout the site.

- Pilot Section 4: Partially buried construction debris was observed along the northern border boundary fence with the former sand mine, and a set of railroad tracks is located along the west border.

- Greenspace Section 5: An oily, rust-colored substance was observed on the north side in an approximately 1,300 foot long ditch. Debris was observed along the perimeter of the Section including tires, concrete piping, concrete, scrap metal, plastics, and some buried material. Monitoring wells/piezometers were observed during the Phase I Investigation; however, these wells were either abandoned, buried, or in disrepair.

  The Greenspace Section is currently being used as part of the groundwater control system and a leachate collection system for the closed Gary Municipal Landfill to the east. The groundwater control system consists of a pump on the west side of the site that reduces the local groundwater level for operation of the landfill leachate collection system

  The leachate collection system is separated from the Greenspace Section by an approximately 10-foot high clay berm. The clay berm was constructed to join with the underlying clay formation for leachate flow control and collection. The system is an active part of the ongoing landfill operation and maintenance and is excluded from redevelopment.

1.2 Summary of V3 Ecological Assessment

In conjunction with the Phase II ESA, a Baseline Ecological Assessment Report was prepared by V3 Consultants (V3). The subject properties were investigated by V3 to determine the presence, extent and quality of any wetlands or other areas under US Army Corps of Engineers (ACOE) or IDEM jurisdiction. The following is a brief summary of the ecological survey results provided by V3.

Four wetlands were found within the 215-acre J-Pit project area, totaling approximately 18.27 acres. These wetlands were dominated by low-quality vegetation, such as Common Reed (Phragmites australis), Purple Loosestrife (Lythrum salicaria), Reed Canary Grass (Phalaris arundinacea), and Narrow-leaved Cattail (Typha angustifolia), although some higher ranked species also were present. Areas described in the Baseline Ecological Assessment Report are labeled to indicate which Section they are present; thus, Area 1 is within Pilot Section 1, and Area 2 is in Pilot Section 2, and so on.

Additional letters after the site label indicate whether the site is either an upland or wetland. The findings are summarized below:

Pilot Section 1

Pilot Section 1 does not contain any jurisdictional wetland areas; however, it does contain moderate to good quality native Black Oak (Quercus velutina) savanna on remnant sand dunes, which is a relatively rare habitat in Indiana. Therefore, a growing season botanical survey should be conducted in advance of any proposed site development to determine whether any Indiana State threatened or endangered plant species are present. No listed plant species have been found to date, but additional and more extensive surveys may be warranted based on the number and quality of species already known to be present to prevent later project delays.

Pilot Section 2

While no dune and swale features still exist on Section 2 due to historical excavation and leveling, the Section does contain an approximately 0.10-acre emergent wetland labeled as Area 2b. Area 2B is located in the southwestern portion of Pilot Section 2, along the southern property boundary. The small wetland does not appear to be part of a remnant swale based on the lack of characteristic swale vegetation and an underdeveloped vegetative community. The closed depressional nature of Area 2b means that this wetland is likely to be considered an isolated wetland and therefore not under ACOE jurisdiction.

Pilot Section 3

Pilot Section 3 contained an approximately 4.91-acre emergent wetland (Area 3c) located in the southern portion the Section. A 1.48-acre remnant Black Oak savanna (Area 3b) is located south of this emergent wetland. The emergent wetland portion of the remnant dune and swale complex is likely to be considered isolated, due to its closed depressional nature and lack of a surface water connection. No other dune features are located on Pilot Section 3 due to historic dune leveling.

Pilot Section 4

The southern portion of Pilot Section 4 contains an approximately 12.40-acre emergent wetland (Area 4b). The emergent swale is located between two dunes and is directly connected to a much larger wetland located south of the dune and swale complex. This larger emergent wetland is likely an old swale that was expanded during the construction of residential housing located to the south. These wetlands appear to be isolated in nature. The large emergent wetland is partially surrounded by Black Oak savanna, making it the largest remnant dune and swale complex identified on the 215-acre J-Pit site. The size of the dune and swale complex is approximately 18.00 acres and encompasses the southern portion of the Section. A chain-link fence that traverses the property at its mid-section defines the limits of this portion of the site.

The northern portion of Section 4 contains leveled dunes and a borrow pit, but no intact dune and swale features. Although initially inconclusive, a re-evaluation of the sand pit on September 3, 2003, resulted in the addition of 0.86 acre of wetland (Area 4c) to Pilot Section 4. The combined wetland acreage for Areas 4b and 4c equals 13.26 acres. These wetlands appear to be isolated, but because of their association with a dune and swale habitat complex they may be under IDEM jurisdiction.

Greenspace Site Section 5

The former sand mine (known locally as the "J-Pit") does not qualify as "waters of the United States" since it is a sand and gravel quarry that has not been abandoned and which is operated (pumped) by the City of Gary. In addition, it does not qualify as "waters of the State of Indiana" as it appears to qualify as one or more of the following: off-stream ponds, reservoir, or facility built for reduction or control of pollution or cooling of water. In a letter dated June 20, 2003, the ACOE (Detroit District) determined that the Greenspace Site "...does not meet Corps criteria for regulation and is therefore not within Federal Jurisdiction (File No. 90-145-129-2)." A copy of this jurisdictional determination is included in Appendix V of the Baseline Ecological Assessment Report and is valid through June 20, 2008, when it may be re-evaluated. However, this letter does not eliminate the need to contact IDEM for state

permitting requirements. IDEM should be contacted well in advance of any proposed site modification activities.

1.3 Site Geology/Hydrogeology

According to the 1992 United States Department of Agriculture (USDA) Soil Conservation Service (SCS) Soil Survey of Lake County, Indiana, the site and immediate area are underlain by the Oakville-Tawas complex and the Tawas Muck soils. The Oakville-Tawas complex is comprised of about 45 percent Oakville sand and 45 percent Tawas Muck. The Oakville sand is a black to yellowish brown, excessively drained, fine sand located on narrow ridges. The Tawas muck is a black, deep, very poorly drained organic muck underlain with a grayish-brown loose sand in depressions between the Oakville sand ridges. The large portions of the site surface have been heavily altered by sand mining, filling, grading, spreading gravel and stockpiling activities.

The site is located at the boundary of lacustrine deposits of the Calumet Lacustrine Plain physiographic region and the Toleston Beach complex. The Calumet Lacustrine Plain has been heavily altered due to industrial and residential development. Where undisturbed, the area is dominated by three relict dune-capped beach ridges separated by broad inter-ridge marches. The Toleston Beach complex extends from between the Little Calumet River and the Grand Calumet River to Lake Michigan and is characterized by linear ridges of unified parabolic dunes interspaced with interdunal swamps (dune and swale). The unconsolidated materials were deposited in the Wisconsin age, with a combined action of ice, wind and water. The glacial deposits in the vicinity and surrounding area have an estimated thickness of 150 feet (1994, Department of Environmental Resources Water Resource Availability in the Lake Michigan Region, Indiana).

The site is within the Calumet Aquifer System consisting of fine to medium sand with beach gravel beds. Discontinuous beds of silt, clay and peat deposits confine the aquifer in some locales. The aquifer is considered highly susceptible to surface contamination due to the lack of a clay cap or separator beds (1994, Department of Environmental Resources Water Resource Availability in the Lake Michigan Region, Indiana). Regional groundwater flow is anticipated to be to the north toward the Grand Calumet River and Lake Michigan, but due to the location of the site between the Grand Calumet and Little Calumet Rivers, local groundwater flow may differ.

The unconsolidated soils are underlain by the Wabash Formation within the Kankakee Arch. The Wabash Formation is comprised of reef and inter-reef Silurian dolomite, dolomitic limestone and argillaceous limestone (1994, USGS Hydrogeologic Atlas of Aquifers in Indiana).

1.4 Phase II ESA Workplans

On the behalf of the Gary DOEA, Baker submitted Phase II ESA Workplans to the USEPA Region V Brownfield Section in June 2002. The Phase II ESA Workplans included a Quality Assurance Project Plan (QAPP), Sampling and Analysis Plan (SAP) and Health and Safety Plan (HASP) for the J-Pit Redevelopment Site. The SAP and QAPP were designed to ensure that sampling and data collection activities were carried out with generally acceptable practices and to demonstrate that data obtained during the field investigation are of sufficient quantity and quality to fulfill project data quality objectives, as described in the QAPP. These plans were generated to provide technical guidance and address health and safety concerns during the Phase II ESA.

The USEPA reviewed and approved the Phase II ESA Work plans on October 1, 2002. The IDEM Brownfield Section agreed to accept the USEPA review/approval in lieu of an IDEM review. The Phase II ESA Workplans were submitted, revised and approved by the Gary DOEA, IDEM, and the USEPA prior to commencement of field activities.

The chemicals of concern for this project were identified in the Phase II ESA Workplans were Volatile Organic Compounds (VOCs), Semi-volatile Organic Compounds (SVOCs), eight Resource Conservation and Recovery Act (RCRA) metals (arsenic, barium, cadmium, chromium, lead, mercury, selenium and silver), and Polynuclear Aromatics Hydrocarbons (PNAs) (in aqueous samples only). The media to be evaluated included soil, groundwater, surface water and sediment.

SECTION 2.0

2.0 SAMPLING METHODOLOGY

The goal of the Phase II ESA was to provide site characterization for redevelopment evaluations individual Sections and the overall 215-acre J-Pit site. The objective of the Phase II ESA was to evaluate the presence of chemicals associated with the RECs identified in the July 2001 Phase I ESA, or additional concerns identified by the Gary DOEA.

Field activities conducted during the Phase II ESA included the advancement of soil borings in all of the Sections, the installation of monitoring wells, collection of soil samples via GeoProbe® borings and test trenches, collection of sediment, surface water and groundwater samples, and groundwater level measurements. As outlined in the Workplans, the Phase II ESA was designed to provide a characterization of the site and potential contaminants associated with the Phase I RECs.

The chemicals of concern for this project were VOCs, SVOCs and eight RCRA metals in soil and sediment; and VOCs, SVOC/PNAs, and eight RCRA metals in groundwater and surface water. Specific sample locations and Section-specific sampling variations are described in Section 3.1 to 3.5. All field activities were conducted in accordance with the USEPA approved Workplans.

A brief description of the practices, procedures and methods used to collect samples during the Phase II ESA for the various media are described in the following section.

2.1 Mobilization

The field investigation was conducted during sampling events in 2002 and 2003 through mobilization activities such as equipment procurement, utility clearances, location of decontamination and drum storage areas, etc. Subsurface exploration, decontamination equipment, and associated materials were mobilized by Paramount Environmental Services of Portage, Indiana; Enviro-Dynamics, Inc. of Hobart, Indiana; and Integrated Environmental Solutions of Gary Indiana. Sample labels, containers, identification numbers and tracking documents were provided by SIMALABS International (SIMALABS) of Merrillville Indiana. Surveying, Ecological Assessment, and Redevelopment Assessment was performed by V3 Consultants of Woodridge, Illinois. Remaining sampling equipment, underground utility notifications, and other supplies were collected and provided by the Baker field team.

2.2 Surface Soil Sampling

Surface soil samples were collected to characterize the potential impact of surface material or a release at the surface. Surface soil samples were collected from 0 to 1.5 foot below ground surface (bgs) via three methods: a GeoProbe® soil sampler with new acetate liner, a stainless steel hand auger, or a stainless steel spoon. Soil was placed in a stainless steel bowl upon retrieval and any rock, twigs, debris and/or vegetation were removed prior to filling soil jars. Laboratory supplied jars were filled in the following order: VOCs, SVOCs and Metals. Typically, the soil samples were analyzed for VOCs and SVOCs with a percentage of them analyzed for RCRA metals. In order to provide areal coverage of surface soil conditions, surface soil samples from borings within each section were composited and analyzed for RCRA metals.

Soil descriptions were logged and the location noted and staked upon completion in accordance with the Workplans. Sampling locations for each area are shown on Figure 3. Selected soil samples were composited to provide additional evaluation of RCRA metals in surface soils within each of the five sections. The surface sampling procedures are presented in the SAP and QAPP.

2.3 Subsurface Soil Sampling

Surface and subsurface soil samples were collected via a GeoProbe® sampler fitted with a new acetate sleeve and advanced at 4-foot intervals until groundwater was encountered (typically 4 to 28 feet bgs). Each 4-foot GeoProbe® soil sample was opened at the surface, screened using a photoionization detector (PID) and logged by the on-site geologist. A minimum of one soil sample was selected from each borehole based upon PID readings, and visual and field indications of the highest soil contamination in each boring. Non-VOC soil samples were based upon the soil type and chemical of concern characteristics or other visible signs of contamination, per the observations of a professional geologist.

All soil samples were transferred from the GeoProbe® acetate sampler into laboratory supplied jars with a decontaminated stainless steel spoon. Laboratory supplied jars were filled in the following order: VOCs and SVOCs at intervals and frequencies described in Section 3.0 and the Workplans. Soil samples for Metals analysis were collected at select locations as determined by the field geologist

based on field conditions and overall coverage. Following the sampling activities, each GeoProbe® borehole was backfilled to the ground surface with bentonite chips, and the location was stacked.

2.4 Test Trenching

Test trenches permitted a more detailed exploration of the nature and extent of contamination of in-situ materials, and the characteristics and stratification of near surface materials. The trenches were dug with an excavator to a common depth of up to 5 feet. Excavation was performed by removing approximately 12 inches of soil in each lift prior to inspection. Peat layers were encountered at several locations at depths of 3 to 5 feet. To avoid creation of a potential pathway to groundwater between the upper fill material and the lower sand unit, the lower peat layer was not compromised during trenching activities.

The test trenches were logged and sampled by the on-site geologist. The dimensions and location of the test trenches as well as soils classification and description in accordance with the Baker standard operating procedures. Samples were collected at shallow depths of less than 3 feet. Soil samples were collected at three trench locations based upon PID readings, and field indications of the highest soil contamination. Laboratory supplied jars were filled in the following order: VOCs, SVOCs and Metals. Prior to and after each test trench excavation or sampling location, equipment was decontaminated. Per the Gary DOEA, backfill materials were returned to the trench to reduce immediate site hazards and minimize the potential for rainwater accumulation and potential contaminant migration.

2.5 Sediment Sampling

Sediment sampling was limited to the Greenspace Section 5 (see Figure 3) at paired locations with surface water samples. Following collection of a surface water sample, a sediment sample was collected from the top of the sediment to a depth of 0.5 feet. As with surface water samples, sediment samples were obtained using on-shore access. Sediment sampling was conducted using either a stainless steel hand auger or sampling spoon based upon site conditions at the time of the sampling event. Sampling personnel used judgment in removing large plant fragments to limit bias caused by bioorganic accumulation.

The auger/spoon was advanced one bucket at a time, to a depth of 0.5 feet. The same bucket auger or sampling trowel was used to advance the hole, as well as collect subsequent samples in the same hole. Sediments were placed in a stainless steel bowl and allowed to drain by partially decanting accumulated liquid. Laboratory supplied jars were filled in the following order: VOCs, SVOCs and Metals. The sampling locations were marked with a stake placed at the nearest bank or shore.

2.6 Surface Water Sampling

Surface water sampling was limited to the Greenspace Section 5 (see Figure 3). Surface water samples were collected using either a Teflon dipper cup or directly into laboratory bottles (with preservation at the surface) based upon site conditions at the time of the sampling event. Samples were collected by immersing either the approved sample container or a glass beaker into the water obtained from the shore. Sample bottles (which did not contain preservatives) were rinsed at least once with the water to be sampled prior to sample collection. Care was taken to avoid excessive agitation of the water which could result in the loss of volatile constituents. Sample collection equipment was submerged just below the surface of the water to avoid floating debris or dust/film on the water and with care to avoid disturbing the sediment and biasing the sample. Laboratory supplied jars were filled in the following order: VOCs, SVOCs, PNAs, and Metals. The sampling locations were marked with a stake placed at the nearest bank or shore.

2.7 Well Installation/Development

Monitoring wells were installed based on the data from the GeoProbe® soil sampling and discussions with the Gary DOEA (see Figure 3). Wells were installed through hollow-stem augers via a truck-mounted drill rig. The well depths were based on lithology, depth to water, and observations from GeoProbe® boreholes advanced at the same location or at adjacent boreholes.

Monitoring wells were constructed of 2-inch diameter, Schedule 40 PVC screen and riser. The screens were 10 feet in length with 0.010-inch machined slots. The annulus surrounding the well screen was commonly backfilled from the bottom of the borehole to a minimum of two feet above the top of the screen with 10 to 12 mesh silica sand. The remaining annulus was filled with bentonite chips to near grade and hydrated. The wells were completed with aboveground protective steel

casing embedded in a concrete pad and supplied with a locking cap and lock. The pads were sloped so as to provide positive drainage away from the well.

The newly installed monitoring wells were developed no sooner than 24 hours following installation. Prior to development, measurements of the static water level and total depth were recorded for well volume calculations. A minimum of three and a maximum of five well volumes were evacuated through bailing. Field parameters of pH, specific conductance and temperature were recorded in the field books after each well volume had been evacuated. The wells were not considered developed until stability of the field parameters (typically less than 10 percent change between three successive measurements) or evacuation of a maximum of five volumes had occurred. All soil cuttings and development water were containerized in 55-gallon drums, labeled, and left at the well locations pending disposal by the Gary DOEA.

2.8 Groundwater Sampling

Prior to groundwater sampling, static water level and total depth measurements were recorded for well volume calculations. As with well development, a minimum of three and a maximum of five well volumes were evacuated via bailer prior to sampling.

Measurements of pH, specific conductivity, and temperature were recorded after the evacuation of each well volume. The wells were considered sufficiently purged once three well volumes and stability of the field parameters (typically less than 10 percent change between three successive measurements) or removal of a maximum of five volumes had occurred.

Groundwater samples were collected following purging by decanting the dedicated bailer directly into laboratory supplied bottles filled in the following order: VOCs, SVOCs, PNAs, and Metals.

Groundwater sampling was conducted from all 16 monitoring wells in two events: Round 1 in December 2002, and Round 2 in July/August 2003. MW-17 was installed in 2003 was included in Round 2. All groundwater samples were analyzed for VOCs, SVOCs, PNAs, and RCRA metals.

A third limited sampling event was conducted in December 2003 for arsenic and lead from five selected wells for comparison of total metals versus low-flow total metals and dissolved metals with field filtering.

2.9 Alternative Low Flow Sampling Method

During the limited third round of groundwater sampling, low flow sampling methodology was used to reduce turbidity. The sampling was performed via bladder pump connected to double walled Teflon tubing lowered into the monitoring well and set at the midpoint between the bottom of the well and the water table. The bladder pump is a pneumatic pump that is capable of drawing water at low flow rates typically between 0.1 to 0.5 liters per minute from the well. As the water was being purged, field parameters (pH, conductivity, temperature and turbidity) were periodically monitored. Once the parameters had stabilized, typically within the purging of one well volume, the sample was collected. Although not identified as one of the sampling methods in the Project QAPP, low flow groundwater sampling is a recognized technique by the USEPA to collect samples that are representative of actual groundwater conditions.

2.10 Decontamination and Waste Handling

Prior to initiation of field activities, between each boring location, and prior to leaving the site, all associated excavation, drilling and sampling equipment were steam cleaned in order to prevent cross-contamination. During field activities, GeoProbe® soil samplers, hand augers, spoons and associated sampling equipment were decontaminated via the following six-step procedure:

1. Alconox soap and potable water wash
2. Potable water rinse
3. Isopropyl alcohol or methanol wash
4. Distilled water rinse
5. 10% nitric acid solution wash
6. Triple distilled water rinse

This same sequence for decontamination was used for smaller equipment (such as stainless steel spoons, low flow pumps, bowls and bailers), but without steam cleaning. Personal decontamination steps were conducted as required in the HASP.

Soil cuttings, purge water and associated decontamination fluids, including steam cleaned equipment rinsate, were placed into properly labeled 55-gallon drums and stored pending analytical results and disposal by the Gary DOEA. Health and safety disposables, such as sampling gloves, paper towels, or other materials which contacted potentially contaminated materials were "double bagged" and disposed of as non-hazardous waste.

2.11 Quality Assurance/Quality Control Samples

During the field sampling activities, quality assurance/quality control (QA/QC) samples were collected in order to verify the accuracy of data supplied by the laboratory. Duplicate samples were collected at a ratio of one duplicate in 10 samples (10 percent) and one matrix spike/matrix spike duplicate (MS/MSD) in 20 samples (5 percent). In addition to the duplicates and MS/MSD samples, field/equipment rinsate blanks were collected at a ratio of one blank in 20 samples(5 percent). In addition, a trip blank accompanied each sample shipment delivered to the laboratory. The trip blanks were analyzed for VOCs only.

2.12 Sample Numbering

Samples collected during the Phase II ESA were designated with an appropriate sample prefix according to the following list and sample number, date, or interval:

- LS - Lead/RCRA metal investigation soil sample
- LSC - Lead/RCRA metal investigation composite soil sample
- MW- Monitoring Well groundwater sample
- SB - Soil Boring soil sample
- SC - Soil Composite sample
- SD - Sediment sample
- SS - Surface Soil sample

- SW - Surface Water sample
- TP - Test Pit soil sample

An example of this would be SB-10, where SB indicates a soil boring and 10 indicates the tenth sample in the series.

Groundwater samples collected after the installation of the wells were designated by the well number and number of the sample event (e.g., MW-1-01).

Duplicate samples were given a individual sample number to prevent the laboratory from differentiating between samples and duplicate samples. MS/MSD for matrix spike/matrix spike duplicate was attached to the sample designation. Field/equipment rinsate blanks were designated by the prefix FB or ER and a sequential number. Trip blanks had a TB prefix followed by a sequential number.

2.13 Chain-Of-Custody, Sample Packing and Shipping

Proper chain-of custody documentation was maintained for all samples from the time of collection until they were shipped to the laboratory. Chain-of-custody sheets accompanying the samples included the following information: project number, sampler(s) name, sample numbers, number of containers, method(s) of preservation of samples, date and time of sample collection, analysis(es) requested, and date and time of transportation to the laboratory. All samples were placed in ice in a cooler immediately following collection and maintained under chain of custody procedures until delivered to the laboratory by Baker.

2.14 Documentation

A notebook was dedicated to the investigation and served as a daily logbook detailing the weather and activities of the day, including work accomplished, those present on site, and technical issues such as sample numbers, descriptions of sample locations, any problems encountered during sample collection and preservation methods.

2.15 Field Change and Corrective Action

Changes to the procedures in the QAPP/SAP due to field conditions (e.g., weather problems, obstruction to sampling locations) were agreed upon with the Gary DOEA project representative or communicated from the Field Team Supervisor to the Project Manager, and then to the Gary DOEA Project Manager. Upon mutual agreement of the best method of solving the problem, the method was implemented and the changes were either noted in the field notebook or placed in the project file.

2.16 Field Instrument Calibration

Equipment calibration was performed at the frequency and using the directions recommended by the manufacturer of each piece of equipment. Calibrations were performed daily, prior to initiation of field activities.

2.17 Preservation

All samples were preserved with ice to a temperature of 4° Celsius prior to transportation to SIMALABS. Aqueous samples to be analyzed for VOCs were preserved with hydrochloric acid to a pH of less than 2. Aqueous samples to be analyzed for RCRA metals were preserved with nitric acid (HNO3) to a pH of less than 2.

2.18 Analytical Methods

Surface soil, subsurface soil and groundwater samples were analyzed by SIMALABS. The analyses followed the appropriate SW 846 analytical method, sample preparation steps, and data packages and validation procedures. The specific analytical methods are as follows:

- VOCs by USEPA SW-846-Method 8260B
- SVOCs by USEPA SW-846-Method 8270C
- PNAs by USEPA SW-846-Method 8310
- RCRA metals by USEPA SW-846-Methods 6010, 3015, and 3051

SECTION 3.0

3.0 SITE INVESTIGATION ACTIVITIES

For purposes of discussion, the field investigation is divided into the respective Pilot Sections 1 through 4 and the Greenspace Section 5. This division is to identify environmental concerns relative to their geographic areas and to provide evaluations appropriate for future development. A description of the Section/event-specific sampling activities is subdivided by media (soil, groundwater, surface water, and sediment). Figure 3 provides a map showing locations for borings and monitoring wells. Boring logs and well construction diagrams are presented in Appendix A.

In addition to the Section-specific investigation activities, three other events are included in their own subsections:

- As a result of the discovery of high concentrations of lead in soil during the initial sampling, the Gary DOEA requested an additional investigation located in the former Paul's Auto Yard portion of Sections 2 and 3. This investigation was limited to lead and select locations for RCRA Metals in surface and subsurface soils.

- As a result of elevated turbidity/contaminant levels, a limited groundwater-sampling event was conducted in December 2003 at five wells for analysis of arsenic and lead via low flow sampling.

- A brief description of the site survey is provided.

3.1 Pilot Section 1

3.1.1 Soil Sampling

Seven GeoProbe® soil borings were advanced within Pilot Section 1 at the following locations:

- SB-9 - east of Colfax Avenue in the south central area of this smaller parcel,
- SB-10 - along the border with the Greenspace near Colfax Avenue,
- SB-11 - along Colfax Avenue midway along Section 1,

- SB-23 - northwest corner of Section 1,
- SB-24 - southwest corner of Section 1 along the border with the Greenspace,
- SB-25 – midway along the southern border with the Greenspace, and
- SB-26 - midway along 15th Avenue along the northern portion of Section 1.

Since specific RECs identified in the previous Phase I ESA were not within the borders of Pilot Section 1, the borings were designed to provide areal coverage of the site, while SB-23 was located along the western property line adjacent to the Phase I ESA REC area (see Figure 3).

Nine soil samples were collected from these six borings as follows: SB-9-01 and SB-9-02, SB-10-01, SB-11-01, SB-23-01, SB-24-01, SB-25-01, SB-26-01. The two samples were collected from 0 to 2.5 feet bgs (SB-9-01, and SB-24-01). The remaining six samples were collected from just above the water table at depths that ranged from 10 to 23 feet bgs.

One additional composite sample (SC-1) was collected from surface soils at 0 to 1.5 feet bgs from equal aliquots from all seven of the borings and submitted for RCRA metals analysis only.

3.1.2 Groundwater Sampling

Four wells (MW-1 to 4) were installed in Section 1 (see Figure 3): SB-24, SB-10, SB-9 and SB-26 were located in association with the installation of wells MW-1, MW-2, MW-3, and MW-4, respectively.

The Round 1 (2002) sampling included groundwater samples MW-1-01, MW-2-01, MW-3-01, and MW-4-01. The Round 2 (2003) sampling included samples MW-1-02, MW-2-02, MW-3-02, and MW-4-02.

3.2 Pilot Section 2

3.2.1 Soil Sampling

Five GeoProbe® borings were advanced in Pilot Section 2 at the following locations:

- SB-20 - along the northern border with the Greenspace
- SB-21 - southeastern portion of the property,
- SB-22 - south central portion of the property,
- SB-28 - between the former Paul's Auto Yard and the Greenspace, and
- SB-29 - southwestern portion of the property.

Boring SB-28 was located to address the Phase I ESA debris pile, 55-gallon drums, and scrap metal REC along the border with the Greenspace. Borings SB- 20, SB-22, and SB-29 were designed to provide areal coverage of the site, while SB-21 and the test trenches provided targeted sampling within the former Paul's Auto Yard and Leroy's Used Cars operation areas (see Figure 3).

Six subsurface soil samples were collected: SB-20-01, SB-21-01, SB-22-01, SB-28-01, SB-28-02, and SB-29-01. Three samples were collected from 2 to 4 feet bgs (SB-21-01, SB-28-01and SB-29-01). The remaining three samples were collected from just above the water table at depths that ranged from 9 to 21 feet bgs.

One additional composite sample (SC-2) was collected from surface soils at 0 to 1.5 feet bgs from equal aliquots from all five of the borings and submitted for RCRA metals analysis only.

In order to address community concerns, the Gary DOEA requested three additional surface soil samples to address potential surface runoff impacts to residential areas. Sample SS-2 was collected immediately to the south of southwest corner of Section 2 from a ditch along the east side of Fairbanks Avenue. Surface soil samples (SS-01-729 and SS-02-729) were collected to the south and west of the Former Pails Auto Yard from 0 to 1.5 feet bgs. These samples were collected to further evaluate the Former Paul's Auto Yard and assess surface water pathways for migration of chemicals of concern offsite.

3.2.2 Groundwater Sampling

Four wells were installed in Section 2 (see Figure 3). SB-28 and SB-29 were located in association with the installation of wells MW-9 and MW-13, respectively. MW-8 was located in the Former Paul's Auto Yard and was based upon test trench data. MW-14 was located adjacent to the residential properties at the south end of the Section 2 to provide coverage along the property line.

The Round 1 (2002) sampling included groundwater samples MW-8-01R, MW-8-01D, MW-9-01, MW-13-01, and MW-14-01. During the initial sampling, samples inadvertently were broken at the laboratory that resulted in resampling of MW-8 with replacement sample MW-8-01R.

The Round 2 (2003) sampling included samples MW-8-02, MW-9-02, MW-13-02, and MW-14-02.

3.2.3 Test Trenches

Test trenches were conducted in 2002 in the Former Paul's Auto Yard to evaluate subsurface conditions of reported historical buried materials. Samples were collected at shallow depths of less than 3 feet. During the test trench excavations, three soil samples (TP-01, TP-02, and TP-03) were selected for analysis based upon PID readings and field indications of soil contamination. Figure 4 provides a diagram of the test trench locations and a cross section of the trenches. The cross section shows that much of the top two feet was backfilled with a variety of materials including construction debris and auto salvage scrap material.

3.3 Pilot Section 3

3.3.1 Soil Sampling

Eight GeoProbe® soil borings were advanced within Pilot Section 3 at the following locations:

- SB-1 – west side along Colfax Avenue,
- SB-2 – north side near border with the Gary Municipal Landfill,
- SB-3 – northeast corner near the Gary Municipal Landfill and infiltration pond,
- SB-4 - central portion of Section 3,
- SB-5 - along the eastern property boundary with Bivona Inc.,
- SB-6 - along the western property boundary near the Former Paul's Auto Yard,
- SB-7 - southeast corner near Bivona Inc, and
- SB-8 - southwestern portion of Section 3.

Borings SB-1, 2, and 3 were located to address the Gary Municipal Landfill and infiltration pond. Borings SB-5 and 7 were located to address the Bivona Inc. VRP site. Boring SB-6 was located to address the Former Paul's Auto Yard site, and borings SB-4 and 8 were designed to provide the remaining areal coverage of the site (see Figure 3).

Nine soil samples were collected from the eight borings as follows: SB-01-01, SB-02-01, SB-03-01, SB-04-01, SB-05-01, SB-06-01, SB-07-01, SB-7-02 and SB-08-01. Sample depths ranged from 0 to 7.5 feet bgs with groundwater encountered from 3 to 8 feet bgs.

One additional composite sample (SC-3) was collected from surface soils at 0 to 1.5 feet bgs from equal aliquots from all eight of the borings and submitted for RCRA metals analysis only. Subsequent to the results of sample SC-3, the component samples (SB-01a to SB-08a) were submitted for additional analysis for lead.

3.3.2 Groundwater Sampling

Four wells were installed in Section 3 (see Figure 3): MW-16 along the eastern border with the Bivona VRP site and the Gary Landfill Retention Pond, MW-5 on the northwestern corner, MW-6 on the western border and MW-7 on the southern border. MW-17 was installed following review of the Round 1 sampling in the northeastern comer of the site to address potential interaction with the landfill.

Round 1 (2002) sampling included groundwater samples MW-5-01, MW-6-01, MW-7-01, and MW-16-01. Round 2 (2003) sampling included samples MW-5-02, MW-6-02, MW-7-02, MW-16-02, and MW-17-02.

3.4 Pilot Section 4

3.4.1 Soil Sampling

Four GeoProbe® borings were advanced within Pilot Section 4 at the following locations:

- SB-12 - at the base of the former sand barrow pit,

- SB-15 - along the railroad tracks at the northwest corner of Section 4,
- SB-16 - along the railroad tracks at the west side of Section 4, and
- SB-18 - between Section 4 and the Greenspace/Section 2 intersection.

Since the area south of the 22nd Avenue extension was identified as likely to have ecological concerns limiting future development (as indicated by V-3 Consultants in consultation with the City of Gary), only the area north of 22nd Avenue was addressed during the Phase II ESA. Boring SB-12 was located to address the sand barrow pit/partially buried debris, and borings SB-15, 16 and 18 were located to address the railroad tracks and provide remaining areal coverage of the section (see Figure 3).

Five soil samples were collected from the four borings as follows: SB-12-01, SB-15-01, SB-16-01, and SB-18-01. Sample depths ranged from 0 to 15 feet bgs and groundwater was encountered at 2 to 19 feet bgs. The significant variance in depth to groundwater was largely due to differences in surface elevation at boring locations.

One additional composite sample (SC-4) was collected from surface soils at 0 to 1.5 feet bgs from equal aliquots from all four of the borings and submitted for RCRA metals analysis only.

In order to address community concerns and to evaluate the ecologically valuable area south of the investigation area, seven surface samples were collected at the request of the Gary DOEA. Sample SS-1 was collected in 2002 immediately south of Section 4 in a drainage ditch on Sherman Avenue. Three samples were collected in 2003: SS-5-7-29 north of the Bell Street and 23rd Avenue, SS-4-7-29 north of Edison Street and 23rd Avenue, and SS-3-7-29 west of Fairbanks and north of 23rd Avenue. Sample locations where decided by the Gary DOEA in consultation with local citizens.

3.4.2 Groundwater Sampling

Two wells were installed in Section 4 (see Figure 3): MW-12 centrally along the north border with the Greenspace, and MW-11 across from the railroad tracks.

Round 1 (2002) sampling included samples MW-11-01 and MW-12-01. Round 2 (2003) sampling included samples MW-11-02 and MW-12-02.

3.5 Greenspace Section 5

3.5.1 Soil Sampling

Six GeoProbe® borings were advanced in Greenspace Section 5 at the following locations:

- SB-13 - along the railroad tracks on the west side across from the trucking company,
- SB-14 - along the railroad tracks at the southwest corner across from trucking company,
- SB-17 - along the southern border with Section 4,
- SB-19 - along the southern border with Section 2,
- SB-27 - along the railroad tracks at the west side of the Section, and
- SB-30 - along the railroad tracks at the northwest corner south of waste handling station.

Borings SB-13, 14, 27 and 30 were located to address potential offsite impacts from railroad tracks, trucking facilities, a waste handling station and debris along the perimeter of the Greenspace. Borings SB-17 and 19 were located to provide additional data points for Sections 2 and 4. Soil borings within the Greenspace Section 5 were limited to the western and the southern borders where the native sands still exist above the upper clay formation (exposed across the majority of the area).

Six soil samples were colleted from the six borings as follows: SB-13-01, SB-14-01, SB-17-01, SB-19-01, SB-27-01, and SB-30-01. Sample depths were approximately 14 to 15 feet bgs.

One additional composite sample (SC-5) was collected from surface soils at 0 to 1.5 feet bgs from equal aliquots from all four of the borings and submitted for RCRA metals analysis only.

3.5.2 Groundwater Sampling

Two wells (MW-10 and 15) were installed in Section 5 (see Figure 3), and four wells (MW-1, MW-2, MW-9 and MW-12) were installed along the border in other Sections. MW-10 was installed along the western property border at SB 27, and MW- 15 was installed in the northwest corner at SB-30.

Round 1 (2002) sampling included samples MW-10-01 and MW-15-01. Round 2 (2003) sampling included samples MW-10-02 and MW-15-02.

3.5.3 Sediment and Surface Water Sampling

Surface water samples SW-1 to 5, sediment samples SD-1 to 5, and surface soil samples SS-3 to SS-7 were collected at the following locations:

- SW-1/SD-1 - in the northern trench,
- SW-2/SD-2 - near the reported oily, rust colored substance,
- SW-3/SD-3 - in the central trench,
- SW-4/SD-4 - adjacent to the southern end of the leachate collection berm,
- SW-5/SD-5 - adjacent to the central portion of the leachate collection berm,
- SS-3, SS-4 and SS-6 - across the central portion of the parcel,
- SS-5 and SS-7 - immediately to the west of the leachate collection berm.

All surface water samples were collected with a corresponding sediment sample. SW-2/SD-2 was to address the reported oily, rust colored substance; SW-1/SD-1 and SW-3/SD-3 were to address the use of the pit as a groundwater control system; and SW-4/SD-4, SW-5/SD-5, SS-5, and SS-7 were designed to evaluate the potential for infiltration of run-off from the Former Paul's Auto Yard and the Gary Municipal Landfill leachate collection system. SS-3, SS-4 and SS-6 provided the remaining areal coverage of the Greenspace (see Figure 3).

For categorical purposes these samples are identified as surface water and sediment samples; however, due to the active use of the area for groundwater elevation control, they are more representative of groundwater and surface soil. At the time of surface water sampling, the depression was seasonally low and much of the area was dry; therefore, some of the SAP sediment sampling locations were sampled for surface soil only.

3.6 Paul's Auto Yard (Lead and other RCRA Metal Investigation)

During the initial Phase II ESA sampling, elevated lead levels were identified in the former Paul's Auto Yard in portions of Sections 2 and 3. This area was covered with fill material that included car parts and construction debris. In order to better evaluate the site conditions and aid in evaluating potential remedial and development options, the Gary DOEA requested an additional investigation for lead, and at limited locations for other RCRA metals. The area included in the additional investigation was the eastern 6 acres of Section 2 and the northern 22 acres (two thirds) of Section 3 (for a total of 28 acres). The sample collection was conducted in accordance with the surface and subsurface soil sampling methods described in Sections 2.2 and 2.3.

The fieldwork was conducted in two phases in July and August 2003. The first phase included 29 soil borings (LS-1 to 30). Based on the results of the July phase, an additional 35 borings were advanced (LS-31 to 64). Fifteen borings were completed in Section 2, and 49 borings were completed in Section 3.

Table 1 provides a summary log of the borings including a brief discussion of soil type, depth to water, depth of boring, sample interval, and location and Figure 9 shows the sample locations. The samples were collected from four intervals as follows: 64 samples were collected from A (0'-2'), 46 from B (2' to 5'), 11 from C (5 to 8') and one from D (8' to 12') for a total of 122 samples.

All 122 samples were submitted for total lead analysis. In addition, seven samples (LS-9, LS-14, LS-45, LS-31 LS-34B, LS-45A, LS-59D) were submitted for total RCRA metals analysis, and six samples for laboratory pH measurement (LS-9A, LS-45A, LS-32A, LS-56B, LS-59B, and LS-20B).

A composite sample (LSCM-1) from equal aliquots from samples LS-6A, LS-13A, LS-18A, and LS-15A; and composite sample LSCM-2 from samples LS-29A, LS-28A, LS-27A, and LS-26A were submitted for TCLP RCRA Metals analysis. TCLP samples were collected for disposal purposes and for evaluation of migration to groundwater. These samples were composited at SIMALABS.

3.7 Alternate Low Flow Sampling Evaluation

As a result of the slightly turbid conditions observed during groundwater sampling and the overall decrease in total metal concentrations between Round 1 and Round 2, an evaluation of potential sampling methodology (low-flow versus filtration) was conducted at five wells in December 2003. The intent of this evaluation was to address the potential impact of the fine sediments/turbidity on the elevated levels of RCRA metal results in the groundwater samples.

The evaluation consisted of sampling five wells (one from each Section) for the lead and arsenic. The locations of the wells (MW-3, 5, 8, 11 and 15) were based on areal distribution, prior levels of RCRA metals, and accessibility. Sampling was conducted via three methods: low-flow unfiltered, bailer unfiltered, and bailer with field filtering. All five of the wells were sampled (MW-3-03, MW-3-03, MW-5-03, MW-8-03, MW-11-03 and MW-15-03) via low flow-unfiltered methods; two of the wells (MW-5-03B and MW-11-03B) were purged and sampled using bailing as outlined in the USEPA approved QAPP; and one well sample (MW-5-03-BF) was field filtered following sample collection via a dedicated bailer.

3.8 Site Survey

Following field activities, the monitoring wells were surveyed for vertical and horizontal control by V3 Consultants to standard, acceptable surveying practices as required by the State of Indiana. Horizontal Datum is based on Indiana West, State Plain (US Feet) and the Vertical Datum is NGVD 29 (US Feet). The information was used to develop potentiometric surface data to determine groundwater flow direction.

SECTION 4.0

4.0 RESULTS

This section provides a discussion of the results of the Phase II ESA in the following subsections:

4.1 Pilot Section 1 Results

4.2 Pilot Section 2 Results

4.3 Pilot Section 3 Results

4.4 Pilot Section 4 Results

4.5 Greenspace Section 5 Results

4.6 Paul's Auto Yard Lead/Metals Results

4.7 Low Flow Sampling Evaluation

4.8 Data Assessment

4.9 Geology and Hydrogeology

The analytical results are organized by the media sampled (e.g. soil, groundwater), sampling round and by analytical suite (VOCs, SVOCs, RCRA metals). Aqueous sample PNA results are incorporated in the SVOC suite of analytes in the text and tables of the report. The discussion of specific analytes, both in the text and summary tables, is limited to only positive detections above estimated or practical quantitation limits.

Tables 2 through 11 summarize the results of the investigation as follows:

- Table 2: Surface Soil Analytical Results
- Table 3: Subsurface Soil Analytical Results
- Table 4: Sediment Analytical Results
- Table 5: Surface Water Analytical Results
- Table 6: Groundwater Analytical Results, Round 1
- Table 7: Groundwater Analytical Results, Round 2
- Table 8: Paul's Auto Yard Lead/Metal Results
- Table 9: Duplicate Sample Comparisons
- Table 10: Low Flow Sampling Evaluation Results
- Table 11: Groundwater Elevations

Tables 2, 3, 6, and 7 are further subdivided by Section number (Section 1 to 5). Table 3/Section 2 incorporates soil samples collected during the test pit investigation as part of subsurface soil sample

results. While each Section table includes sample results from locations along the Section borders, each Section results discussion is limited to those locations specifically within the Section. All laboratory reports are included in Appendix B and are presented chronologically. Figures 6, 7, and 8 provide summaries of results of exceedances of RISC goals for soil, VRP goals for soil RISC goals for groundwater, respectively.

For comparative purposes, both the IDEM RISC and VRP criteria are included in the text and tables. In the following discussion, the residential and industrial cleanup goals specified within the RISC program or the VRP are simply referred to as Residential RISC, Industrial RISC, Residential VRP, or Industrial VRP. Please note that lead does not have a cleanup goal for groundwater under the 1996 VRP guidance.

4.1 Pilot Section 1

4.1.1 Soil Results

Eight Pilot Section 1 subsurface soil samples (SB-09-01, SB-09-02, SB-10-01, SB-11-01, SB-23-01, SB-24-01, SB-25-01, and SB-26-01) were analyzed for VOCs and SVOCs. Two soil samples (SB-09-01 and composite sample S-1C) were analyzed for RCRA metals. Table 2/Section1 and Table 3/Section1 present the result summaries. Laboratory reports are located in Appendix B.

Sample SB-10-01 was below detection limits for VOCs, and four samples (SB-09-01, SB-09-02, SB-10-01, and SB-11-01) were below detection limits for SVOCs. All eight of the soil samples were below Residential VRP and RISC goals for VOCs and SVOCs.

Samples S-1C and SB-09-01 were below Residential RISC and VRP goals for RCRA metals.

4.1.2 Groundwater Results

Round 1 (2002) Results

Four groundwater samples (MW-01-01, MW-02-01, MW-03-01 and MW-04-01) were analyzed for VOCs, SVOCs/PNAs, and RCRA metals. Table 6/Section 1 present the result summaries. Laboratory reports are located in Appendix B.

All four of the groundwater samples were below detection levels for VOCs and SVOCs/PNAs.

Groundwater sample RCRA metal detections were below Residential VRP and RISC goals, with the exception of arsenic and lead. Arsenic exceeded Industrial VRP and RISC goals in sample MW-03-01 (0.15 mg/l). Lead exceeded Residential RISC in samples MW-02-01 (0.030 mg/l) and MW-04-01 (0.027 mg/l), and Industrial RISC in samples MW-01-01 (0.052 mg/l) and MW-03-01 (0.055 mg/l).

Round 2 (2003) Results

Four groundwater samples (MW-01-02, MW-02-02, MW-03-02 and MW-04-02) were analyzed for VOCs, SVOCs/PNAs, and RCRA metals. Table 7/Section 1 present the result summaries. Laboratory reports are located in Appendix B.

All four of the groundwater samples were below detection levels for VOCs and SVOCs/PNAs.

Groundwater sample RCRA metal detections were below Residential VRP and RISC goals, with the exception of lead; which exceeded Residential RISC in sample MW-01-02 (0.022 mg/l).

4.2 Pilot Section 2

4.2.1 Soil Results

Subsurface Soil Results

Ten Pilot Section 2 subsurface soil samples (SB-20-01, SB-21-01, SB-22-01, SB-28-01, SB-28-02, SB-29-01, TP-01, TP-02, TP-03 and LS-29-3 [collected as part of the Paul's Auto Yard sampling]) were analyzed for VOC and SVOCs. Four subsurface soil samples (SB-28-02, TP-01, TP-02 and TP-03) were analyzed for RCRA metals. Table 3/Section 2 present the result summaries. Laboratory reports are located in Appendix B.

Samples SB-20-01 and SB-22-01 were below detection limits for VOCs, and samples SB-28-02 and SB-29-01 were below detection limits for SVOCs. All 10 samples results were below Residential RISC and VRP goals for VOCs and SVOCs with the following exceptions: benzene in sample TP-03 (0.077mg/kg) exceeded Residential RISC and VRP; methylene chloride in samples TP-01 (0.027 mg/kg) and TP-03 (0.900 mg/kg) exceeded Residential RISC; tetrachloroethene in sample TP-03 (0.140mg/kg) exceeded Residential RISC; and benzo[a]pyrene in sample SB-28-01 (0.620 mg/kg) exceeded Residential RISC.

All four samples were below Residential RISC and VRP goals for RCRA metals.

Surface Soil Results

Four surface soil samples (S-2C, SS-02-01, SS-01-729 and SS-02-729) were analyzed for VOCs, SVOCs and RCRA metals. Table 2/Section 2 present the result summaries. Laboratory reports are located in Appendix B.

All four samples were below Residential RISC and VRP goals for VOCs and SVOCs, and sample SS-01-7/29 was below detection limits.

All four sample results were below Residential RISC and VRP goals for RCRA metals with the following exceptions: arsenic in samples SS-01-729 (4.2 mg/kg) and SS-02-729 (13.0 mg/kg) exceeded Residential RISC; lead in sample SS-01-729 (130 mg) exceeded Residential RISC; lead in sample SS-2-729 (1300 mg/kg) exceeded Industrial RISC; and cadmium and chromium in sample SS-2-729 (10.0 mg/kg and 90.0 mg/kg, respectively) exceeded Residential RISC.

4.2.2 Groundwater Results

Round 1 (2002) Results

Four groundwater samples (MW-08-01, MW-09-01, MW-13-01 and MW-14-01) were analyzed for VOCs, SVOCs/PNAs, and RCRA metals. Table 6/Section 2 present the result summaries. Laboratory reports are located in Appendix B.

Sample MW-08-01R results were below Residential RISC and VRP goals for VOCs, and the remaining three samples were below detection limits. Sample MW-09-01 results were below Residential RISC and VRP, and the remaining three samples were below detection limits for SVOCs/PNAs.

All four groundwater samples were below Residential RISC and VRP goals for RCRA metals with the following exceptions: arsenic in sample M-08-01R (0.052 mg/l) exceeded Industrial RISC and VRP; cadmium in sample MW-08-01R (0.011 mg/l) exceeded Residential RISC; lead in samples MW-08-01R (0.039 mg/l), MW-09-01 (0.031mg/l), and MW-14-01 (0.026mg/l) exceeded Residential RISC; and lead in sample MW-13-01 (0.080 mg/l) exceeded Industrial RISC.

Round 2 (2003) Results

Four groundwater samples (MW-08-02, MW-09-02, MW-13-02 and MW-14-02) were analyzed for VOCs, SVOCs/PNAs, and RCRA metals. Table 7/Section 2 present the result summaries. Laboratory reports are located in Appendix B.

Sample MW-09-02 results were below Residential RISC goals for VOCs, and the remaining three samples were below detection limits. All four samples were below Residential goals for SVOCs/PNAs.

All four of the samples were below RCRA metal Residential RISC and VRP goals with the following exceptions: arsenic in sample MW-09-02 (0.066 mg/l) exceeded Industrial RISC and VRP; lead in samples MW-13-01 (0.024mg/l) and MW-14-01 (0.037 mg/l) exceeded Residential RISC; and lead in samples MW-08-01 (0.12 mg/kg) and MW-09-01 (0.078 mg/l) exceeded Industrial RISC.

4.3 Pilot Section 3

4.3.1 Soil Results

Nine subsurface soil samples (SB-01-01, SB-02-01, SB-03-01, SB-04-01, SB-05-01, SB-06-01, SB-07-01, SB-07-02 and SB-08-01) were analyzed for VOCs and SVOC. Two soil samples (SB-03-01 and SB-07-01) and surface soil composite sample S-3C were analyzed for RCRA Metals. Table 2/Section 3 and Table 3/Section 3 present the result summaries. Laboratory reports are located in Appendix B.

All nine of the soil samples were below Residential RISC and VRP goals for VOCs. Two samples (SB-03-01 and SB-04-01) were below Residential RISC and VRP for SVOCs, and the remaining seven samples were below detection limits for SVOCs.

Sample SB-07-01 was below Residential RISC for RCRA metals. Sample SB-03-01 exceeded Residential RISC for arsenic (5.7 mg/kg), cadmium (14 mg/kg) and selenium (8.9 mg/kg), and Industrial RISC for chromium (130 mg/kg) and lead (1400 mg/kg). Composite sample S-3C exceeded Residential RISC for arsenic (5.4 mg/kg) and chromium (46 mg/kg), and Industrial RISC for lead (490 mg/kg).

The eight sample aliquots (SB-01-01a, SB-02-01a, SB-03-01a, SB-04-01a, SB-05-01a, SB-06-01a, SB-07-01a and SB-08-01a) of composite sample S-3C were individually analyzed for lead. Four of the eight individual aliquot samples exceeded Industrial RISC: SB-01-01a (1500 mg/kg), SB-03-01a (12000 mg/kg), SB-04-01a (960 mg/k), and SB-05-01a (1500 mg/kg). Based on these findings, the Gary DOEA requested additional lead delineation in the Former Paul's Auto Yard.

4.3.2 Groundwater Results

Round 1 (2002) Results

Four groundwater samples (MW-05-01, MW-06-01 MW-07-01 and MW-16-01) were analyzed for VOCs, SVOCs/PNAs, and RCRA metals. Table 6/Section 3 present the result summaries. : Laboratory reports are located in Appendix B.

Samples MW-05-01 and MW-07-01 were non-detect for all VOCs, and SVOCs. In addition, when VOCs or SVOCs were detected, all results were below Residential RISC and VRP goals with the exception of methyl-t-butyl ether detected in sample MW-06-01 (0.59 mg/l) above Residential RISC.

All four of the samples were below RCRA metal Residential RISC and VRP goals with the following exceptions: cadmium in sample MW-07-01 (0.0064 mg/l) exceeded Residential RISC; arsenic in sample MW-05-01 (0.1 mg/l) exceeded Industrial RISC and VRP; and lead in samples MW-05-01 (0.11 mg/l), MW-06-01 (0.11 mg/l), MW-07-01 (0.05 mg/l) and MW-16-01 (0.058 mg/l) exceeded Industrial RISC.

Round 2 (2003) Results

Five groundwater samples (MW-05-02, MW-06-02, MW-07-02, MW-16-02 and MW-17-02) were analyzed for VOCs, SVOCs/PNAs, and RCRA metals. Table 7/Section 3 present the result summaries. Laboratory reports are located in Appendix B.

All five of the samples were below detection limits for VOCs and SVOCs/PNAs with the exception of: sample MW-16-02 results, which were below Residential RISC and VRP for VOCs; and methyl-t-butyl ether in sample MW-06-01 (0.048 mg/l), which exceeded Residential RISC.

All five of the samples were below RCRA metal Residential RISC and VRP goals with the following exceptions: arsenic in samples MW-05-02 (0.084 mg/l), MW-16-02 (0.062 mg/l), and MW-17-02

(0.061 mg/l) exceeded Industrial RISC and VRP; lead in samples MW-05-02 (0.019 mg/l), MW-6-02 (0.031 mg/l), and MW-16-02 (0.021 mg/l) exceeded Residential RISC; and lead in sample MW-17-02 (0.18 mg/l) exceeded Industrial RISC.

4.4 Pilot Section 4

4.4.1 Soil Results

Subsurface Soil Results

Four subsurface soil samples (SB-12-01, SB-15-01, SB-16-01, and SB-18-01) were analyzed for VOCs, and SVOCs. Table 3/Section 4 present the result summaries. Laboratory reports are located in Appendix B.

All four of the samples were below Residential RISC and VRP goals for VOCs. Sample SB-16-01 was below SVOC Residential RISC and VRP, and the remaining three samples were below detection limits.

Surface Soil Results

A composite sample (S-4C) from Section 4 was analyzed for RCRA metals. Table 2/Section 4 present the result summaries. Laboratory reports are located in Appendix B.

Sample S-4C results were below Residential RISC and VRP goals for RCRA metals.

Surface Soil Results outside of Investigation Area

Four surface soil samples (SS-1-01, SS-3-729, SS-4-729 and SS-5-729) from outside the Pilot Section 4 study area were analyzed for VOCs, SVOCs, and RCRA metals. These sample were requested to address community concerns associated the border of the wetlands area in southern part of Section 4 and adjacent properties immediately to the south. Table 2/Section 4 present the result summaries. Laboratory reports are located in Appendix B.

Sample SS-1-01 results were below Residential RISC and VRP goals for VOCs and SVOCs, and the remaining three samples were below detection limits.

All four of the samples were below RCRA metal Residential RISC and VRP with the exception of arsenic in sample SS-1-01 (13 mg/kg) and SS-4-729 (15 mg/kg), which exceeded Residential RISC; and selenium in sample SS-1-01 (8.4 mg/kg), which exceeded Residential RISC.

4.4.2 Groundwater Results

Round 1 (2002) Results

Two groundwater samples (MW-11-01 and MW-12-01) were analyzed for VOCs, SVOCs/PNAs, and RCRA metals. Table 6/Section 4 present the result summaries. Laboratory reports are located in Appendix B.

Both of the samples were below detection limits for VOCs and SVOCs/PNAs.

Both of the samples were below RCRA metals Residential RISC with the following exceptions cadmium in samples MW-11-01 (0.0085mg/l) and MW-12-01 (0.0068 mg/l) exceeded Residential VRP and RISC; lead in sample MW-12-01 (0.034 mg/l) exceeded Residential RISC; and lead in sample MW-11-01 (0.043 mg/l) exceeded Industrial RISC.

Round 2 (2003) Results

Two groundwater samples (MW-11-02 and MW-12-02) were analyzed for VOCs, SVOCs/PNAs, and RCRA metals. Table 7/Section 4 present the result summaries. Laboratory reports are located in Appendix B.

Sample MW-12-01 exceeded the Residential RISC goal for methylene chloride (0.014 mg/kg); all of the remaining sample results were below detection limits for VOCs and SVOCs/PNAs.

Both of the samples were below RCRA metals Residential RISC with the exception of lead in sample MW-11-01 (0.016 mg/kg), which exceeded Residential RISC; and lead in sample MW-12-01 (0.055 mg/kg), which exceeded Industrial RISC.

4.5 Greenspace Section 5

4.5.1 Subsurface Soil Results

Six subsurface soil samples (SB-13-01, SB-14-01, SB-17-01, SB-19-01, SB-27-01 and SB-30-01) were analyzed for VOCs and SVOCs. Table 3/Section 5 present the result summaries. Laboratory reports are located in Appendix B.

Sample SB-13-01 was below detection limits for VOC and the remaining samples were below Residential RISC and VRP goals. All of the soil samples were below detection limits for SVOCs.

4.5.2 Surface Soil Results

In Greenspace Section 5, five surface soil samples (SS-03-01, SS-04-01, SS-05-01, SS-06-01 and SS-07-01) were analyzed for VOCs, SVOCs, and RCRA metals, and composite sample (S-5C) was analyzed for RCRA metals. Table 2/Section 5 present the result summaries. Laboratory reports are located in Appendix B.

Composite sample S-5C results were below RCRA metals Residential RISC and VRP goals.

All five of the surface soil samples (SS-03-01, SS-04-01, SS-05-01, SS-06-01 and SS-07-01) were below Residential RISC and VRP for VOCs and SVOCs. Sample SS-07-01 was below detection limits for SVOCs, and Sample SS-04-01 was below detection limits for VOCs.

All six of the sample results were below RCRA metals Residential RISC and VRP with the following exceptions: arsenic exceeded Residential RISC for all six of the samples: SS-03-01 (8.6 mg/kg), SS-04-01 (5.0 mg/kg), SS-05-01 (8.1 mg/kg), SS-06-01 (6.0 mg/kg), SS-07-01 (7.2 mg/kg) and S-5C (4.2 mg/kg); and selenium exceeded Residential RISC in five of the samples: SS-03-01 (5.3 mg/kg), SS-04-01 (5.6 mg/kg), SS-05-01 (5.6 mg/kg), SS-06-01 (6.2 mg/kg) and SS-07-01 (6.7 mg/kg).

4.5.3 Surface Water Results

Five surface water samples (SW-01, SW-02 SW-03, SW-04 and SW-05) were analyzed for VOCs, SVOCs/PNAs, and RCRA metals from the Greenspace Section 5. Table 5/Section 5 present the result summaries. Laboratory reports are located in Appendix B.

Surface water sample SW-01 results were below Residential RISC and VRP for VOCs and SVOCs. Samples SW-02, SW-03, SW-04 and SW-05 were below detection limits for VOCs and below Residential RISC and VRP for SVOCS/PNAs.

All five of the surface water sample results were below RCRA metals Residential RISC and VRP except with the following exceptions: arsenic in sample SW-01 (0.12 mg/l) exceeded Industrial RISC and VRP; cadmium in samples SW-01 (0.0060 mg/l) and SW-05 (0.0065 mg/l) exceeded Residential RISC and VRP; selenium in samples SW-01 (0.057 mg/l) and SW-05 (0.074 mg/l) exceeded Residential RISC and VRP; and lead in sample SW-05 (0.035 mg/l) exceeded Residential RISC.

4.5.4 Sediment Results

Five sediment samples from Greenspace Section 5 (SD-01, SC-02, SD-03, SD-04, and SD-05) were submitted for VOCs, SVOCs, and RCRA metals analysis. Table 4/Section 5 present the result summaries. Laboratory reports are located in Appendix B.

All five of the samples were below Residential RISC and VRP goals for VOCs and SVOCs except sample SD-04 which exceeded Residential RISC and VRP for benzo[a]pyrene (0.770 mg/kg); Residential RISC for methylene chloride (0.029 mg/kg), and Residential RISC and VRP for benzo[b]fluoranthene (1.60 mg/kg).

All five of the samples were below RCRA metals Residential RISC and VRP goals with the following exceptions: arsenic in samples SD-01 (6.5 mg/kg), SD-02 (4.7 mg/kg), SD-03 (7.8 mg/kg), SD-04 (10 mg/kg) and SD-05 (5.7 mg/kg), and selenium in samples SD-01 (5.3 mg/kg), SD-03 (5.8 mg/kg), SD-04 (15 mg/kg) and SD-05 (6.2 mg/kg) exceeded Residential RISC, but were below Industrial RISC; and chromium in sample SD-01 (71 mg/kg) exceeded Residential RISC.

4.5.5 Groundwater Results

Round 1 (2002) Results

Two groundwater samples (MW-10-01 and MW-15-01) were analyzed for VOCs, SVOCs/PNAs, and RCRA metals. Table 6/Section 5 present the result summaries. Laboratory reports are located in Appendix B.

Both of the samples were below detection limits for VOCs and SVOCs/PNAs.

Both of the samples were below RCRA metals Residential RISC and VRP with the exception of: cadmium in sample MW-15-01 (0.0080 mg/l) and lead in sample MW-10-01 (0.016mg/l), which exceeded Residential RISC and VRP; and lead in sample MW-15-01 (0.046mg/l), which exceeded Industrial RISC.

Round 2 (2003) Results

Two groundwater samples (MW-10-02 and MW-15-02) were analyzed for VOCs, SVOCs/PNAs, and RCRA metals. Table 7/Section 5 present the result summaries. Laboratory reports are located in Appendix B.

Both of the samples were below detection limits for VOCs and SVOCs/PNAs.

RCRA metals in both of the samples were below Residential RISC with the exception of lead in sample MW-10-02 (0.024 mg/l), which exceeded Residential RISC.

4.6 Paul's Auto Yard Lead/Metal Investigation Results

Sixty-four boring/surface sampling locations (LS-1 to LS 64) and 122 soil samples were submitted for lead analysis. Select samples (LS-10A, LS-12A, LS-12B, LS-34B, LS-45, LS-58C, and LS-59B and Section 2 samples SS-1-729 and SS-2-729) were submitted for RCRA metals analysis. Although exceedances of other RCRA metals including arsenic, cadmium and chromium occur within the Former Paul's Auto Yard, the focus of this discussion is on lead. Lead was used as the indicator analyte due to the level of RISC exceedances found, its pervasiveness within the former Paul's Auto Yard, and its persistent association with the other RCRA metals. A full summary of the analytical results is presented in Table 8, and Figure 9 provides the sample locations of the investigation.

During the Investigation, surficial material was comprised of largely fill material and contained brick, concrete, wood, car parts, rubber tires, slag, and sand and silt sized particles. Beneath the fill material is fine to medium grained light brown sand with the occasional peat seam (see Table 1).

The results of the Paul's Auto Yard Lead/Metal investigation indicated significant lead impacts. Approximately 35 percent of the samples submitted for analysis results exceeded the Industrial RISC goal for lead of 230 mg/kg, and nearly 50 percent of the samples submitted for analysis exceeded the

IDEM Residential RISC Cleanup Goal of 81 mg/kg. Sample results for lead ranged from 1.1 mg/kg in sample LS-20b to 3200 mg/kg in sample LS-26.

All of the samples collected from below a depth of 5 feet indicated concentrations of RCRA metals below Residential RISC. The majority of samples collected at a depth of 2 to 5 feet also were below Residential RISC. Based on a review of the data, the elevated lead levels correlate fairly well with the presence of fill material. The areal extent of the elevated lead levels is well delineated to the north, south and west, and exceeds the scope of the investigation beyond the eastern property line.

Samples LS-34B, LS-45A, LS-59B, LSCM-1 and LSCM-2 were submitted for TCLP RCRA metals analysis. This analysis was provided to evaluate pathway to groundwater concerns as well as to provide analytical profiles for future remedial action. As indicated in Table 8c, all results are below USEPA RCRA Hazardous Waste Criteria.

4.7 Low Flow Sampling Evaluation Results

The evaluation consisted of five samples (MW-3-03, MW-3-03, MW-5-03, MW-8-03, MW-11-03, and MW-15-03) acquired via low flow-unfiltered methods; two samples (MW-5-03B and MW-11-03B) using a bailing as outlined in the USEPA approved QAPP; and one well sample (MW-5-03-BF) field-filtered following sample collection via a dedicated bailer for arsenic and lead analysis.

All of the low flow sample results were below Residential RISC and VRP; the two samples collected using bailing methods indicated lead and arsenic levels were either non-detect or below Residential RISC and VRP; and the one filtered sample indicated a significant reduction in arsenic from the low flow unfiltered bailer sample (See Table 10). The results of this evaluation indicated that the following:

1. Turbidity levels in the groundwater has a direct effect on the concentration of metals.

2. A significant decrease of arsenic and lead levels in evaluation samples appeared to be only partially influenced by sampling methodology.

3. The significant decreasing concentrations from Round 1, Round 2 and Low Flow evaluation samples may be the result of seasonal differences or through the continued sampling and development of the monitoring wells.

4.8 Sample Validation

4.8.1 Data Quality

The quality of the data collected as part of the Phase II ESA was assessed by its accuracy and precision with respect to prescribed requirements or specifications for laboratory analysis. To make these determinations, 10 percent of the data set was evaluated by an independent third-party validator. Validation reports are located in Appendix F. Data was evaluated in accordance with the criteria established by USEPA guidelines, "Laboratory Data Validation Functional Guidelines for Evaluating Organic Analyses" (USEPA, 1991b), specific method requirements, and professional judgment. Validation of the analytical data serves to reduce the inherent uncertainties about its usability.

In addition, analytical data was evaluated to determine both the usability of results as well as contractual compliance relative to the aforementioned requirements. Data validation also provided an interpretation of the reported quality control results. A minimum of 10 percent of all laboratory calculations was verified as part of this validation. All instrument output (e.g., spectra, chromatograms, etc.) for the selected sample was carefully reviewed. Data quality was evaluated based on, but not limited to, the following criteria:

- Data completeness
- Holding times
- Calibrations
- Blanks
- Surrogate recoveries
- Initial and continuing calibrations
- Laboratory and field duplicates
- Matrix Spike/Matrix Spike Duplicate samples
- Internal standard performance
- Compound identification
- Compound quantitation

Based upon the results of this evaluation, various qualifiers and/or codes have been attached to certain data by the data validator with regard to the data's usability. These qualifiers often pertain to QA/QC problems and generally indicate questions concerning chemical identity, chemical concentration, or

both. Because the data validation process is intended to assess the effect of QC issues on data usability, validation data qualifiers are attached to the reviewed data subsequent to the laboratory qualifiers and supersede any laboratory qualifiers.

Qualified data are flagged with a letter qualifier representing an associated explanatory note needed to clarify the corresponding analytical result. Data qualified as "J" were retained as estimated. Estimated analytical results within a data set are common and considered to be usable by the USEPA (USEPA, 1989). Data may be qualified as estimated for several reasons, including an exceedence of holding times, high or low surrogate recovery, or intra-sample variability. In addition, values may be assigned an estimated "J" qualifier if the reported value is below the Contract Required Detection Limit (CRDL) or the Contract Required Quantitation Limit (CRQL). Data assigned a rejected "R" qualifier were excluded from the usable data set, and other qualified data were retained in the usable data set. Under these conditions, estimated positive results were designated with "J" qualifiers and rejected data were assigned "R" qualifiers. Annotated Form "Is" for all samples were reviewed by the data validator and included in the overall data assessment. Based on the overall assessment of this data, the validator has deemed it accurate and representative of site conditions.

4.8.2 Data Usability

Data generated from the sampling events were evaluated to assess which were of sufficient quality to meet the project specific objectives. These objectives are as follow:

- Characterize the nature of contaminants at the site,
- Provide initial delineation of soil, surface water, sediment and groundwater impacts, and
- Delineate the extent of lead impacted soil/fill in the Former Paul's Auto Yard.

The Goal in selecting data to use for these objectives is to ensure that accurate and precise data were used to characterize contamination and ensure that the data used accurately reflected site conditions. Data usability is the process of assuring that the quality of data meets the intended purposes. Data usability differs from validation in that it considers both analytical and field error. Data validation is the standardized process by which analytical error is assessed. To assess usability, the following three criteria are evaluated: analytical data quality (i.e., the data validation results), field sampling, and data quality objectives (DQOs).

4.8.3 Analytical Data Quality

Tables 2 through 10 present the sampling and analysis performed in support of the sampling programs. Soil, surface water, sediment and groundwater samples were collected during the Phase II ESA. The samples were analyzed for VOCs, SVOCs/PNAs, and RCRA Metals. Analyses were conducted in accordance with SW-846, 3rd edition, Revision 2, September 1994 methods 8260B, 8270C, 8310, 6010B, and 7470A.

As part of the evaluation of analytical data quality, the following components were assessed and are presented:

- Data validation results
- Impact of rejected data on the data set
- Analytical detection limits (i.e., whether they meet the DQOs)
- Data quality indicators (e.g., completeness, precision, accuracy, etc.)

In accordance with the project QAPP, the laboratory (SIMALABS) submitted a CLP-like deliverable consistent with EPA DQO Level IV. The analytical data were validated by an independent third party, ECT.CON, Inc. Validation was conducted in accordance with the National Functional Guidelines for Organic Data (February 1994), the SW-846 analytical method, and professional judgment. Details of the validation (i.e., case narratives) are located in Appendix B.

2002 Sampling

In several instances, the validator rejected certain data. The rejected data is primarily associated with the VOC and SVOC fractions, and is overwhelmingly associated with non-detects. While this data is acceptable for screening criteria conducted in accordance with IDEM and VRP RISC protocols, future use of this data in subsequent confirmation or Risk Assessment will at a minimum require full data validation of the entire data package. For reference, the primary reasons for data rejection are:

- Continuing calibration relative response factor (RRF) fell below the 0.05 quality control limit for 2-butanone and benzoic acid.
- Initial and continuing calibration RRFs fell below the 0.05 quality control limit for bromomethane, acrolein, and 2-butanone.

- Initial calibration RRFs fell below the 0.05 quality control limit for bromomethane and acrolein.
- The recovery of acrylonitrile (0%) fell below 10% in the LCS.
- Recovery of the surrogate 2,4,6-tribromophenol (7.17%) fell below 10%.
- Continuing calibration %Ds exceeded the 25% quality control limit for bromomethane, acrolein and vinyl acetate.
- Recovery of vinyl acetate (0%) fell below 10% in the LCS analyzed

2003 Sampling

Soils were collected during the 2003 sampling to confirm/refute the presence of lead. No data was rejected from this set.

Groundwater samples were also collected during the 2003 sampling. The validator rejected several for VOCs and SVOCs. The rejected data is primarily associated with the VOC and SVOC fractions, and is overwhelmingly associated with non-detects. While this data is acceptable for screening criteria conducted in accordance with IDEM and VRP RISC protocols, future use of this data in subsequent confirmation or Risk Assessment will at a minimum require full data validation of the entire data package. For reference, the primary reasons for data rejection are:

- Initial and continuing calibration RRFs fell below the 0.05 quality control limit for benzidine, 2-butanone and acrolein.
- The recovery of acrylonitrile (0%) fell below 10% in the LCS.
- Recovery of the surrogate phenol-d5 (2.08%) fell below the 10% quality control limit.
- Continuing calibration %Ds exceeded the 25% quality control limit for benzidine, acrolein and acrylonitrile.

4.8.4 Relative Percent Difference

2002 Sampling

The relative percent difference (RPD) was within the acceptable criteria, as shown on Table 9. The RPD for all but one of the groundwater results were within the acceptable criteria as shown on Tables 9a to 9e. The sample with the large RPD was for a sample with a detect and non-detect result.

The RPD for all but 11 of the soil duplicate results were outside the acceptable control limit of 50% RPD. Seven of the larger RPDs were for analytical parameters with detect and non-detect results. The deviation of the analytical results between the remaining four samples is most likely due to the heterogeneity of the soil samples and/or the matrix interference typical with a soil sample. This does not affect the usability of the data.

2003 Sampling

The relative percent difference (RPD) for all but one of the groundwater results were within the acceptable criteria as shown on Table 9. The large RPD was for chromium.

Overall, the data for the project constituents of concern are usable for quantitative purposes. The completeness Goal of 95 percent was met. The accuracy and precision of the data were verified by the results of the data validation.

No major QA/QC problems were encountered during the field investigation and sample collection. As a result, significant impacts on the analytical results from the sample collections are not expected and no resampling is required.

4.8.5 Data Quality Indicators

The data quality objectives for this project were to obtain analytical data of sufficient quality (i.e., data that may be used quantitatively) to delineate nature and extent of contamination and in support of baseline risk assessment. Based on the results of the data validation and data usability, these DQOs have been met for the project.

4.8.6 QA/QC Sample Results

As part of the requirements for field quality control, two types of QA/QC blanks were evaluated: trip blanks and equipment rinsate/field blanks. Laboratory QC samples (extra volume collected for MS/MSD) were collected in the field. In addition to MS/MSD samples, laboratory QA/QC procedures include analysis of surrogate spikes, lab control standards/blanks, and continuing calibration standards/blanks. These samples were evaluated during the validation and the data usability of these results was presented in the previous sections. Field duplicate sample results were

also compared in the previous section to determine the relative percent difference (RPD) for assessment of variabilities of the measurement process and sampling techniques.

Analysis of blank samples provides a measurement of contamination that may have been introduced into a sample set during the collection, transportation, preparation, and/or analysis of samples. To remove non-site related contaminants from further consideration, the concentrations of chemicals detected in blanks were compared with concentrations of the same chemicals detected in environmental samples. The following organic constituents are frequently associated with analysis of samples and are referred to as common laboratory contaminants (USEPA, 1989):

- Acetone
- 2-Butanone (methyl ethyl ketone)
- Methylene Chloride (Dichloromethane)
- Toluene
- Phthalate Esters

Detections of these common laboratory contaminants in environmental samples are considered to be positive results only when observed concentrations exceeded 10 times the maximum concentration detected in an associated blank (USEPA, 1989). Blanks containing organic constituents that are not considered common laboratory contaminants (i.e., all other organic compounds) were considered as positive results only when observed concentrations exceeded five times the maximum concentration detected in an associated blank (USEPA, 1989). The determination that the detected concentrations were blank-related was made by the data validator. The environmental samples that contained compounds at a concentration less than 10 or five times (as appropriate) the concentrations reported in the associated blank were qualified as "U," non-detect due to blank contamination, by the data validator.

4.8.7 Matrix Spike/Matrix Spike Duplicate Samples

Matrix spike and matrix spike duplicate samples (MS/MSD) were taken during each sampling effort at a frequency of one in 20 for each matrix (e.g., soil and groundwater). Validation of the sample analysis indicates that the percent recovery of the spikes and relative percent difference between the matrix spike sample and matrix spike duplicate sample were not all within control limits. Those MS/MSD with relative percent difference out of the control limits are presented below:

2002 Sampling

MW-08-01R

Recoveries of acrylonitrile (0% and 0%) fell below 10% in MW-08-01R MS and MSD. The non-detect result was rejected "UR"

- SD-03

Recovery of vinyl acetate (0% and 0%) fell below 10% in SD-03 MS and MSD. The non-detect result was rejected "UR"

2003 Sampling

- MW-9-02

The percent recovery of the MW-12-02 matrix spike/matrix spike duplicate for mercury (8%, 3%) was less than the control limit and less than 30%. For the following sample, qualify positive results of silver as estimated "J" and reject "R" non-detect results. As the rejected results are non-detect values, the matrix of the samples was not an interferent in the analytical program.

4.8.8 Trip Blanks

2002 Sampling

Trip blanks TB-1 to TB-6, TB12/5/02, TB12/11/02, and TB-12-23-02 were evaluated during the soil investigation, while one trip blank was evaluated during the groundwater portion of the site investigation. These samples were analyzed for VOCs. VOCs were not detected in any of the trip blanks.

2003 Sampling

Trip blanks TB-728/03, TB7/29/03, and TB-7/30/03 were evaluated during the soil and water investigation. The sample was analyzed for VOCs. VOCs were not detected in the trip blank.

4.8.9 Equipment Rinsate Blanks

2002 Sampling

Equipment rinsate blanks EB-1 to EB-3, and EB-12/23/02 were collected as part of the site investigation. These samples were analyzed for VOCs, SVOCs/PNAs, and RCRA Metals, as these were the constituents of concern for the field investigation. VOCs and SVOCs/PNAs were not detected in any of the equipment rinsate blanks. Metals were detected in three of the samples. One of the samples was associated with a laboratory method blank that also was determined to contain the same contaminant. As the detected value in the equipment blank is less then five times the detected value of the laboratory blank, this value should not be considered to be an issue.

The remaining two equipment rinsate blanks had detected levels of arsenic in a range of 0.011-0.029 and barium at 0.0026. EB-3 was associated with sediment samples. As the results of the sediments analysis for arsenic ranged from 30 to 80 times greater then the reported value in the equipment blank, the value should not be considered an issue. The second equipment blank was associated with soil boring samples.

2003 Sampling

Equipment rinsate blanks LSEB-7/25/03 and EB-7/30/03 were collected. These samples were analyzed for VOCs, SVOCs, and TAL Metals. VOCs and SVOCs were not detected in any of the equipment rinsate blanks. Metals were detected in one of the samples. LS -EB-7/25/03 was probably impacted due the high levels of lead in the soil. Also, due to those high levels versus the low level detected in the blank, it is likely that a cross-contamination from the sample equipment was inconsequential.

4.9 Geology and Hydrogeology

4.9.1 Site Geology

Geologic and hydrogeologic information was obtained through the advancement of the monitoring wells and other borings related to the Phase II ESA. As indicated in Section 1, the area is underlain with 130 feet of unconsolidated material over dolomite bedrock. The unconsolidated material is comprised primarily of approximately 30 feet of sand overlying approximately 100 feet of clay and

clay till. The sand unit comprises the upper aquifer and is hydraulically associated with the Little Calumet River to the South and the Grand Calumet River to the North.

The Phase II investigation was limited to the upper sand unit and the associated unconfined aquifer.

During the investigation, 30 site wide GeoProbe® borings were installed to a maximum depth of 28 feet bgs, and 64 GeoProbe® and hand auger borings were installed in the Former Paul's Auto Yard (Pilot Sections 2 and 3). Soil boring/well installation logs are provided in Appendix A, and the Paul's Auto Yard sampling log is provided on Table 1.

The results of the investigation indicate that the upper 25 to 30 feet of the site is comprised of a dense, light brown, fine to medium grained sand with trace amounts of silt with intermittent banding of peat layer of up to one foot or greater in thickness. Fill material is found across portions of the site, primarily within the Former Paul's Auto Yard. The fill material encountered was from one to three feet in thickness and contained brick, concrete, wood, car parts, rubber tires, slag, sand and silt sized particles.

Locally, several topographic and anthropogenic features affect hydraulic conditions at the site:

- The closed Gary Municipal landfill (the topographic high point in the area) along the eastern portion of the site;
- A drainage control retention pond just east of Section 3; and
- Long-term dewatering of the Greenspace Section 5 depression for maintenance of the landfill hydraulic control.

The landfill is a closed system with hydraulic barriers consisting primarily of a grout curtain and a leachate collection trench on the east side of the site. Both the berm and the grout curtain were constructed down to the clay layer and retard groundwater movement around the perimeter of the landfill.

The surface water drainage retention pond acts as a significant groundwater recharge area that generates localized groundwater mounding, especially during high rain events.

The groundwater that accumulates in the Greenspace depression is actively pumped. This pumping has a significant impact on the direction and flow of groundwater within the study area. A pump

located on the west side of the site provides long-term dewatering of the Greenspace Section 5 depression.

Topographically, Sections 1 to 4 are at approximately 600 to 610 feet above mean sea level. These areas are at elevations similar to the surrounding area. The topographic low of the area is the base of the Greenspace depression at approximately 580 feet above mean sea level, either at or within a few feet of the clay unit.

4.9.2 Site Hydrogeology

The effects of the landfill, retention pond and dewatering activities dominate groundwater flow within the study area. These influences and the resultant flow patterns are a depicted in the groundwater contour diagrams (Figures 5a, 5b, and 5c) from groundwater measurement events in November 2002, April 2003, and July 2003. The direction of groundwater flow is primarily toward the Greenspace depression and increases in slope with proximity. The groundwater flow for the majority of the study area is primarily defined by the dewatering activities. Localized reversal of groundwater flow was also observed in the area adjacent to the retention pond and provides a western component in Pilot Section 3.

The hydraulic gradient - defined as the rate of change in pressure head per unit of distance at a given point in a given direction - varies significantly both in direction and slope across the site. The hydraulic gradient varies across the site from approximately 2.5×10^{-2} feet/foot to 4×10^{-2} feet/foot. In comparing groundwater elevation from wells on the south and north sides of the study area, groundwater elevations are consistently higher to the south. This suggests that, in the absence of pumping, groundwater would likely flow to the north, northwest toward the Grand Calumet River.

Hydraulic conductivity - defined as the rate of flow in gallons per foot through a one-foot cross section under a unit hydraulic gradient - was estimated for the site, based on data generated from prior investigations in Northwest Indiana and from reference materials providing hydraulic conductivity data for similar lithologies. The estimated hydraulic conductivity for the upper sand unit is anticipated to range from of 5 to 50 feet/day.

Effective porosity is defined as the volume of void spaces through which water or other fluids can travel in a rock or sediment divided by the total volume of the sediment or rock. Based on sieve analysis from other samples collected in this formation, the effective porosity is 30 percent. Based

on the prior information one can calculate the average velocity (the rate of fluid movement through a porous media) within the sand formation using the following equation.

$$V=K*I/N$$

Where V= Average Flow Velocity,
K= Hydraulic Conductivity
I= Groundwater Gradient
N= Effective Porosity

Based on site hydrogeological parameters, the average velocity for groundwater at the J-Pit site ranges from 0.42 to 0.67 foot/day.

5.0 CONCLUSIONS

The J-Pit Redevelopment Project is intended to evaluate the 215-acre site for potential multipurpose usage. The J-Pit site has been entered into the Indiana VRP program; however, under the 1996 VRP Resource Guide rules, the City of Gary has the option to proceed under the Indiana Brownfield Program. Therefore, the Gary DOEA has elected to evaluate the Phase II ESA data to both the 1996 VRP and IDEM RISC default cleanup goals for potential residential and commercial land use.

The following discussion of the site Remediation Objectives (ROs) are based on both the 1996 VRP and IDEM RISC default cleanup goals. The site ROs will vary depending on land usage, site activities, and the oversight agency.

The Greenspace (Section 5) soil/sediment and groundwater/surface water evaluations are combined due to the unique nature of the Greenspace parcels, which is a component of the active hydraulic control system for the Gary Municipal Landfill (the landfill). Surface water within the Greenspace is groundwater from the surrounding aquifer that is drawn toward the dewatering pump. In order to maintain hydraulic control for the landfill, the extraction rate must be much greater than available recharge from precipitation. Therefore, surface water within the Greenspace is evaluated as part of the overall groundwater. Sediment is similar in characteristics to the surface soil within the Greenspace that has been subjected to repeated submersion and exposure cycles and thus, sediment and surface soil will be evaluated together.

As stated in the Baseline Ecological Assessment by V3, "The J-Pit does not appear to qualify as 'water of the United States' as the former sand and gravel quarry that has not been abandoned and is being operated (pumped) by the City of Gary. In addition, it does not appear to qualify as 'water' of the State of Indiana as it appears to qualify as one or more of the following: off stream ponds, reservoir, or facility built for the reduction or control of pollution or cooling water."

The following section presents discussions of the contaminants of concern, nature and extent of contamination, conceptual site model, the fate and transport of site contaminants, and recommendations.

5.1 Remediation Contaminants of Concern

Those compounds that exceeded ROs (IDEM RISC or IDEM VRP residential and/or non-residential) have been identified as the Remediation Contaminants of Concern (RCOC). The RCOCs are discussed below with respect to the matrix. Data supporting selection of the RCOCs are provided in Tables 2 through 10.

Soil RCOCs include:

- VOCs - benzene and tetrachloroethene
- PNAs - benzo[a]pyrene, benzo[b]fluoranthene
- Metals - arsenic, cadmium, chromium, lead, selenium

Groundwater RCOCs include:

- VOCs - methyl t-butyl ether
- Metals - arsenic, cadmium, lead, selenium

While methylene chloride was detected in both soil and groundwater samples, the Data Assessment (Section 4.8) concluded that it was a laboratory artifact and was not included in the RCOC list.

5.2 Nature and Extent of Contamination

The following provides a review of the nature and extent of contamination within each of the 5 J-Pit Sections and Paul's Auto Yard (portions of Section 2 and 3) for soil and groundwater.

5.2.1 Soil

Pilot Section 1

Soil in Pilot Section 1 did not exceed the ROs; no additional investigation is anticipated.

Pilot Section 2

Soil in the western 15 acres of the 23-acre Pilot Section 2 did not exceed the ROs; no additional investigation is anticipated.

Soil in the easternmost 8 acres (¼) of the Pilot Section 2 parcel exceeded the ROs for the following: VOCs - benzene, methylene chloride, and tetrachloroethene; and metals - arsenic, cadmium, chromium and lead. The area of impact is largely limited to the upper two to three feet of soil within the former Paul's Auto Yard. Additional investigation results and delineation of lead and other metals are addressed in the Paul's Auto Yard subsection below.

Pilot Section 3

Soil in the southernmost five acres of the 27-acre Pilot Section 3 did not exceed the ROs; no additional investigation is anticipated.

While soil in the remaining 22-acre portion of Pilot Section 3 did not exceed VOCs or SVOCs ROs; arsenic, cadmium, chromium, lead and selenium exceeded ROs in the former Paul's Auto Yard portion of the parcel. Additional investigation results and delineation of lead and other metals are addressed in the Paul's Auto Yard subsection below.

Pilot Section 4

There were no exceedances of ROs in soil samples collected within the Phase II ESA investigation area in Pilot Section 4; no additional investigation is anticipated.

Two locations to the south of Pilot Section 4 exceeded the arsenic and selenium ROs. These locations are south of the undeveloped wetland portion of the parcel. These locations do not appear to be associated with the J-Pit and are well within regional sediment background levels (see *Regional Background Sediment Levels for Metals* below); therefore, no further delineation is anticipated.

Greenspace Section 5

Subsurface soil around the perimeter of the Greenspace Section 5 did not exceed ROs; no additional investigation is anticipated.

Surface soil and sediment within the Greenspace former sand mine exceeded ROs for arsenic, chromium and selenium. The metals were found at multiple locations within the J-Pit regional sediment background levels for Lake County Indiana (see *Regional Background Sediment Levels for Metals* below), and no further delineation is anticipated.

One sediment sample located at the southeast corner of the landfill leachate collection system exceeded PNA (benzo[a]pyrene and benzo[b]fluoranthene) ROs. While this occurrence appeared to isolated, delineation/confirmation may be appropriate.

Paul's Auto Yard Lead/Metals Investigation

The results of the Paul's Auto Yard Lead/Metals Investigation indicated an area significantly impacted, with almost 50 percent of the samples submitted for analysis exceeding the ROs.

The impacted area was vertically delineated to the upper five feet of fill material. Soil below five feet did not exceed ROs. In addition, the majority of samples collected at a depth of two to five feet were below ROs. The elevated lead levels were closely associated with the presence of fill material. The areal extent of the elevated lead levels was delineated with the exception of two small areas on the eastern and western property lines. Further delineation to the east is limited by both the property line and the Gary Municipal Landfill Retention Pond; while the western limit extended off-site toward an adjacent salvage/junk yard. Delineation of off-site areas exceeded the scope of the investigation and would yield limited additional data.

Regional Background Sediment Levels for Metals

Elevated levels of RCOC metals are found in background sediment in Lake County as shown in the Purdue University, Department of Forestry and Natural Resources report "Sediment Background

Concentration Distribution of 172 Potential Pollutants in Indiana" by Stephen Went. The study listed background concentrations for metals in sediment samples from Lake County (at the 95th percentile) for lead at 1,539 mg/kg, arsenic at 54.4 mg/kg, and chromium at 346 mg/kg. These levels are among the highest found within the State of Indiana and provide evidence that elevated metals are not limited to the J-Pit study area, but are a regional concern in Lake County, Indiana.

5.2.2 Groundwater

Since elevated lead levels were identified in upgradient and downgradient wells across the 215-acre J-Pit site; the lead in groundwater appears to be a regional characteristic and not directly associated with specific J-Pit sources.

Pilot Section 1

Groundwater in Pilot Section 1 did not exceed VOC or SVOC/PNA ROs during any of the sampling events.

While arsenic in MW-1 and lead in all four wells exceeded the ROs during the Round 1, only lead in MW-1 exceeded the ROs during Round 2.

Pilot Section 2

Groundwater in Pilot Section 2 did not exceed VOC or SVOC/PNA ROs during any of the sampling events.

Arsenic exceeded ROs in one well during both of the sampling rounds, and cadmium exceeded ROs during Round 1. While lead exceeded ROs in all four wells during both rounds, three of the four wells showed a reduction in lead during the second round.

Pilot Section 3

Methyl-t-butyl ether (MTBE) exceeded the ROs in one well during both rounds in Pilot Section 3, the remaining VOC or SVOC/PNA did not exceed ROs during any of the sampling events. While the

Paul's Auto Yard Lead/Metals Investigation

While lead was encountered in groundwater and surface water across the J-Pit site, the lead concentrations within the immediate area of the former Paul's Auto Yard appear to be more consistent and slightly higher than the other areas.

Low Flow Sampling Evaluation

The low flow sampling evaluation indicated that while turbidity levels in the wells have an effect on the groundwater sample metal concentrations (that may be partially addressed via low flow sampling methodology) the significant decrease in concentrations from the Round 1, Round 2 and Low Flow evaluation samples may result from seasonal variances, or from the continued sampling and development of the monitoring wells. Low flow sampling methods are recommended as part of any future sampling events.

5.2.3 Summary

To summarize, soil and subsurface soils in primarily fill material at the former Paul's Auto Yard, and the isolated PNA impacted sediment location were the only impacted soils at the J-Pit site.

Groundwater and surface water RO exceedances were limited to metals across the entire site and MTBE at the former Paul's Auto Yard. To address the slightly higher concentrations at Paul's Auto Yard, seasonal variations and the decreasing metals result trend, additional groundwater monitoring is recommended

5.3 Conceptual Site Model

To evaluate potential exposure pathways for both human health and ecological receptors, a conceptual site model (CSM) has been generated for the J-Pit site based in the current conditions and history of the site and potential future land use.

The 215-acre J-Pit area is located east of Burr Street, south of 15th Avenue, west of the E.J.& E. Railroad and north of 23rd Avenue in Gary (Calumet Township), Lake County, Indiana. The J-Pit is located in an area of mixed usage including residential, industrial, commercial and undeveloped

side-gradient (southwest) direction of the MTBE exceedance has been delineated, it has been delineated in upgradient and downgradient directions.

Cadmium exceeded the ROs in one well, but only during the first round. Arsenic exceeded ROs in one well during both rounds, and arsenic exceeded ROs in two wells only during the second round. Lead exceeded ROs in all the wells sampled during the first round, and all but one of the wells during the second round. All other RCRA metals were either non-detect or below ROs.

Pilot Section 4

Groundwater in Pilot Section 2 did not exceed VOC or SVOC/PNA ROs during any of the sampling events, with the exception of methylene chloride, which was indicated as a laboratory artifact.

Cadmium exceeded the ROs in one well during Round 1 only; and lead exceeded ROs in both wells during Round 1, and in one well during Round 2.

Section 5

Groundwater in Pilot Section 2 did not exceed VOC or SVOC/PNA ROs during any of the sampling events.

Cadmium in one well and lead in two wells exceeded ROs during Round 1, and lead in one well exceed ROs during Round 2.

Surface water sampling indicated the presence of arsenic, cadmium, lead and selenium above ROs. Due to the fact that the surface water in the J-Pit is part of an active groundwater pumping system, the analytical result from surface water sampling has been incorporated into the site-wide review for groundwater.

properties (see Figures 1 and 2). The general property description for each of the Sections are provided below:

- Pilot Section 1: This section consists of approximately 15 acres of undeveloped, wooded land with minor scattered debris.

- Pilot Section 2: This section consists of approximately 23 acres covered with trees and grasses. While several streets were extended into the section, it was not developed. The eastern one/fourth of the section was part of the former Paul's Auto Yard.

- Pilot Section 3: This section lies directly south of the closed Gary Landfill and consists of approximately 27 acres. The northern 22 acres of the site were part of the former Paul's Auto Yard operations and is covered with fill material, small piles of construction debris and scrub vegetation. A small potential wetland is located in the southern 5 acres of the section.

- Pilot Section 4: Is an undeveloped parcel that contains over 13 acres wetland area located in the southern portion of the 36 acre section. A small barrow sand pit is located along the northern side.

- Greenspace Section 5: This section is the former sand mine and encompasses roughly 114 acres. The section is actively dewatered as part of the landfill hydraulic control system with an extraction pump located on the western side. Shallow water-filled ditches run through the section to the dewatering pumps. A leachate collection berm/system is located along the eastern border of the parcel. The entire perimeter of the section is fenced to prevent trespassing.

While there were no underground utilities or other potential manmade pathways identified in the Former Paul's Auto Yard area, once the contaminants have left the site (via the soil to groundwater and groundwater routes), other manmade pathways such as buried utilities, sewers etc. may intercept the groundwater off-site.

The current exposure route most likely to have human health impact would be by trespassers on the Property that may come into contact with impacted soil or inhalation of contaminated particulates.

Graphic representation CSMs identifying potential exposure pathways for potential human health and ecological receptors are shown on Figure 10 and 11. The CSM is meant to be a "living" model that can be updated and modified as additional data become available. The potential exposure scenarios identified as potentially complete and proposed for evaluation are identified below. However, the CSM will be reviewed and modified as necessary as additional site data is generated.

5.3.1 Human Health CSM

The CSM is used to guide evaluation of the potential risk to human health at the J-Pit Site. The CSM presented in Figure 10 show potential sources of chemicals, potential environmental release mechanisms, potential exposure pathways, potential exposure routes, and potential human receptors. Potentially complete exposure pathways found to be insignificant (i.e., those for which no RCOCs are identified at concentrations greater than ROs) will not be retained for further evaluation. Those potentially complete exposure pathways identified as potentially significant may require additional evaluation.

In addition to the following complete exposure routes, potential exposure routes associated with surface water, sediment and fish tissue for upgradient surface water bodies upgradient of the Phase II ESA study area may require additional evaluation to confirm that the Greenspace active dewatering system is providing capture of groundwater contaminants.

Paul's Auto Yard

Paul's Auto Yard has numerous complete exposure routes due to the following conditions: a lack of soil covering; no security; and the presence of VOC, PNA, and Significant Metals RCOCs in the surface, subsurface and groundwater (see Figure 10). Based on knowledge of current conditions of Paul's Auto Yard, the surrounding, and reasonably foreseeable future land use: a future industrial, commercial and maintenance worker; and recreational and residential (via trespass) receptors have been identified for the site. Pathways that will require additional investigation, evaluation or remediation include:

- Ingestion/inhalation of airborne dust or volatile emissions;
- Ingestion and dermal exposure of subsurface soil;
- Ingestion and dermal exposure of surface soil (construction worker only); and
- Inhalation, ingestion, and dermal exposure to groundwater;

J-Pit Site (minus Paul's Auto Yard)

The remainder of the J-Pit site (minus Paul's Auto Yard) has significantly fewer complete pathways, since most of the site samples were below ROs. Based on current conditions of the J-Pit site, the surrounding, and reasonably foreseeable future land use: a future industrial, commercial and maintenance worker; recreational, fisher and residential (via trespass) receptors have been identified for the site. Pathways that will require additional investigation, evaluation or remediation include:

- Ingestion and dermal exposure of surface water (maintenance worker and trespasser);
- Ingestion and dermal exposure of sediment (PNAs at the SD-4 location);
- Inhalation, ingestion, and dermal exposure to groundwater; and
- Fish tissue ingestion for fisher (trespasser).

5.3.2 Ecological CSM

In conjunction with the Phase II ESA, a Baseline Ecological Assessment Report was prepared by V3 Consultants (V3) that identified several potentially sensitive ecologic receptor areas, in the J-Pit area. Four wetlands were found within the 215-acre J-Pit project area, totaling approximately 18.27 acres:

- Area 2b - a 0.17-acre isolated wooded wetland,
- Area 3c - a 4.91-acre emergent wetland,
- Area 4b - a 12.40-acre emergent wetland, and
- Area 4c – a 0.86-acre wetland.

A general ecological CSM is included (Figure 11) that identifies potential sources of chemicals, potential environmental release mechanisms, potential exposure pathways, potential exposure routes, and potential ecological receptors. Potentially complete exposure pathways found to be insignificant

(i.e., those for which no RCOCs are identified at concentrations greater than ROs) will not be retained for further evaluation. Those potentially complete exposure pathways identified as potentially significant may require additional evaluation.

Ecological receptors are the components of ecosystems that are or may be adversely affected by a chemical or physical stressor. Receptors can be any part of an ecological system, including species, populations, communities and the ecosystem itself.

Potential ecological exposure pathways may be evaluated include the exposure to RCOCs in surface water and sediments by aquatic and wildlife receptors (principally waterfowl) through direct contact, ingestion, and bioaccumulation in prey (fish) tissue.

5.4 Contaminant Fate and Transport

This section presents a summary of key chemical and physical properties of the RCOCs and how these properties affect the behavior of the RCOC within the physical setting of the J-Pit Site.

5.4.1 Characteristic of Reactivity

The evaluation of the soil pH was limited to the former Paul's Auto Yard investigation; pH ranged from 7.4 to 8.2 (slightly alkaline). The analytical results for pH are provided in the laboratory reports in Appendix B.

The RCOCs do not exhibit any of the characteristics of reactivity as shown on USEPA Envirofact and Material Safety Data Sheets (MSDS) (provided in Appendix C).

5.4.2 Characteristics of Toxicity

Total Characteristic Leachability Procedure (TCLP) analysis was run on representative soil samples as part of the Paul's Auto Yard Lead/Metals investigation to evaluate any characteristics of toxicity for the eight listed metals. The results indicated that, based on leachability, the soils would be considered non-hazardous. The TCLP results are provided in the laboratory reports in Appendix B.

5.4.3 RCOC Characteristics

In evaluating the potential fate and transport of the RCOCs, the chemical, physical and biological characteristics of the site directly affect transport mechanisms. Among these characteristics are: solubility, specific gravity, and Henry Coefficient for the RCOC. Solubility is one of the most important properties affecting the fate and transport of organic compounds in the environment. Solubility is described as the maximum dissolved quantity of a compound in solution in water at a given temperature. Specific gravity is defined as the ratio of weight of a given compound to the weight of the same volume of water. The primary purpose for determining specific gravity is to determine if the liquid floats or sinks. Henry's Law constant expresses the amount of chemical partitioning between air and water at equilibrium. Therefore it indicates the tendency of a chemical to transfer from air to water or vice versa.

The following table provides the Solubility, Specific Gravity and Henry Law's constant for the RCOCs.

Constituent	Solubility (mg/L)	Specific Gravity	Henry's Law constant
VOCs			
Benzene	1.79×10^{3}	.879	0.227
MTBE	5.1×10^{4}	.731	0.024
Tetrachloroethene	2.06×10^{2}	1.631	0.724
PNAs			
Benzo[a]pyrene	1.62×10^{-3}	1.35	0.0000187
Benzo[b]fluoranthene	1.5×10^{-3}	—	0.0000269

The following provides a description of each RCOC along with common usage, sources and terrestrial/aquatic fate information.

Benzene

Benzene, also known as benzol, is a colorless liquid with a sweet odor. Benzene evaporates into air very quickly and dissolves slightly in water. Benzene found in the environment is from both human activities and natural processes. The primary release of benzene is through former Paul's

Auto Yard operations resulting in the spillage of gasoline. Benzene is also used for the manufacturing of some types of rubbers, lubricants, dyes, detergents, drugs, and pesticides. Natural sources of benzene, which include volcanoes and forest fires, also contribute to the presence of benzene in the environment. Benzene is also a natural part of crude oil and gasoline, and cigarette smoke.

Industrial discharge, disposal of products containing benzene, and gasoline leaks from underground storage tanks can release benzene into water and soil. Benzene can pass into air from water and soil surfaces. Once in the air, benzene reacts with other chemicals and breaks down within a few days. Benzene in the air can attach to rain or snow and be carried back down to the ground. Benzene in water and soil breaks down more slowly. Benzene is slightly soluble in water and can pass through the soil into underground water. Benzene in the environment does not build up in plants or animals.

Tetrachloroethene

Tetrachloroethene, also known industrially as perchloroethylene (PCE), is a common solvent used to clean machinery and electronic parts, and it was likely used at the former Paul's Auto Yard as a parts degreaser. It and trichloroethene (TCE) are suspected carcinogens, and some of the most abundant environmental pollutants of groundwater in the United States. In some groundwater, they undergo reductive dechlorination catalyzed by anaerobic bacteria that yields vinyl chloride, a potent human carcinogen.

Tetrachloroethene is highly mobile in soil and will leach rapidly into groundwater. Several studies have indicated that PCE biodegrades very slowly under anaerobic conditions. The biodegradation products of PCE are TCE, dichloroethene and vinyl chloride.

Methyl Tertiary Butyl Ether

Methyl tertiary butyl ether (MTBE) is a volatile flammable colorless liquid with a turpentine-like odor, originally used in gasoline as an octane enhancer. MTBE has higher water solubility, exhibits lower adsorption to soil, and is more resistant to chemical degradation than the other common groundwater contaminants from gasoline - benzene, toluene, ethylbenzene, and xylene

(BTEX compounds). Its water solubility is about 25 times more soluble than benzene, the most soluble of the BTEX constituents. This implies that MTBE should be more readily leached to groundwater, and transported more quickly and further in groundwater, than the BTEX compounds. Its adsorption to soil is so low that it should transport nearly as rapidly as the groundwater itself.

MTBE degrades rather rapidly in the atmosphere. The primary degradation product is tertiary-butyl formate. Half-lives of MTBE in the atmosphere can be as short as three days. The primary reactant in the atmosphere responsible for the degradation is the hydroxyl radical.

Evidence to date indicates that MTBE degrades much slower than the BTEX compounds, and, therefore may travel further and persist longer in groundwater plumes. The primary reaction product is tertiary-butyl alcohol, which is another constituent of gasoline commonly found in conjunction with MTBE. The ultimate degradation products have been confirmed to be carbon dioxide and water.

Polynuclear Aromatic Hydrocarbons

The Polynuclear Aromatic Hydrocarbons (PNAs) above the ROs at the site are benzo[a]pyrene and benzo[b]fluoranthene. These will be discussed as a group because of their similar attributes. The USEPA Fact Sheet presents information in general about PNAs and specifically about benzo(a)pyrene. PNAs are formed as a result of incomplete combustion of organic materials and are not produced or used commercially. PNAs are found in emissions from vehicles, coal, oil and wood burning stoves and furnaces, cigarette smoke, incinerators, coke ovens, asphalt processing and use, and charcoal broiled foods. Benzo(a)pyrene is relatively stable in the atmosphere and may be transported long distances on particulate matter. When released to water it adsorbs very strongly to sediments and particulate matter. Adsorption to sediments and particulates may significantly retard biodegradation, photodegradation, and evaporation. Benzo(a)pyrene releases to soil adsorb very strongly and are not expected to leach to groundwater. Biodegradation may be an important mechanism in soils. Bioaccumulation in aquatic organisms is variable depending on the species ability to metabolize it. Human exposures are from inhalation of contaminated air and consumption of contaminated food and water. Cigarette smoking results in especially high levels of exposure.

A single source of the PNAs found in the soil has not been identified at the Property. The fill material itself is a likely source, as well as atmospheric releases in the highly urbanized area. The PNAs are also likely related to the fuel and oil releases at the former Paul's Auto Yard. Studies have been conducted by the Electric Power Research Institute (EPRI) indicating that PNAs are ubiquitous in the environment, especially in urban areas.

Several sources for the metals found at the Property are likely: 1) the fill material, 2) the former Paul's Auto Yard, and 3) atmospheric emissions.

Arsenic

Arsenic is a naturally occurring element. Most inorganic and organic arsenic compounds are white or colorless powders that do not evaporate. Arsenic can enter the environment in several ways. Even though it does not evaporate, arsenic can get into air as dust. Once in the air, the arsenic particles will travel with the wind for a while, but will then settle back to the ground. Most arsenic compounds can also dissolve in water. Thus, arsenic can get into lakes, rivers, or underground water by dissolving in rain or snow, or through the discharge of industrial wastes. Some of the arsenic will stick to the sediment on the bottom of the lake or river, and some will be carried along by the water.

Arsenic is not broken down or destroyed in the environment. However, it can change from one form to another by natural chemical reactions, and also by the action of bacteria that live in soil or water. Although some fish and shellfish build up arsenic in their tissues, most of this is in a form that is not toxic (often called "fish arsenic").

Because arsenic is a natural part of the environment, low levels of arsenic are present in soil, water, and air. Soil usually contains has the highest levels. Some areas of the country contain unusually high natural levels of arsenic in rock, and this can lead to unusually high levels of arsenic in soil or water.

Cadmium

Cadmium is an element that occurs naturally in the earth's crust. Most cadmium used in this country is extracted during the production of other metals such as zinc, lead, or copper. Cadmium has many uses in industry and consumer products, mainly batteries, pigments, metal coatings, and plastics. A likely on-site source for cadmium is car paint or in the fill material from the former Paul's Auto Yard. Cadmium is used in electroplating and for pigments used in paint, printing ink, and plastics. It is also used as a stabilizer in PVC plastic and in electrical batteries and fluorescent and video tubes.

Cadmium can enter the environment in several ways. It can enter the air from the burning of coal and household waste, and metal mining and refining processes. It can enter water from disposal of wastewater from households or industries. Fertilizers often have some cadmium, and fertilizer use causes cadmium to enter the soil. Spills and leaks from hazardous waste sites can also cause cadmium to enter soil or water. Cadmium attached to small particles may get into the air and travel a long way before coming down to earth as dust or in rain or snow. Cadmium does not break down in the environment but can change into different forms. Most cadmium stays where it enters the environment for a long time. Some of the cadmium that enters water will bind to soil but some will remain in the water. Cadmium in soil can enter water or be taken up by plants. Fish, plants, and animals take up cadmium from the environment.

Chromium

Chromium and its compounds are used in metal alloys such as stainless steel; protective coatings on metal; magnetic tapes; and pigments for paints, cement, paper, rubber, composition floor covering and other materials. Other uses include: chemical intermediate for wood preservatives, organic chemical synthesis, photochemical processing and industrial water treatment. In medicine, chromium compounds are used in astringents and antiseptics. They also are used in cooling waters, and in the leather tanning industry, in catalytic manufacture, and in fungicides; as an algaecide against slime forming bacteria, and yeasts in brewery processing water and brewery warmer water.

Chromium occurs in nature mostly as chrome iron ore, or chromite. Though widely distributed in soils and plants, it is rare in natural waters. The two largest sources of chromium emission in the atmosphere are from the chemical manufacturing industry and combustion of natural gas, oil, and coal.

Other sources include wind transport from road dust, cement producing plants (cement contains chromium), the wearing down of asbestos brake linings from automobiles or similar sources of wind carried asbestos (asbestos contains chromium), incineration of municipal refuse and sewage sludge, exhaust emission from automotive catalytic converters, emissions from cooling towers that use chromium compounds as rust inhibitors, waste waters from electroplating, leather tanning, textile industries when discharged into surface waters, and solid wastes from chemical manufacture.

Chromium is not likely to migrate to ground water. A field trial on the application of wastewater treatment sludge to soils found movement of heavy metals, including chromium, from the soil surface to a depth of 10 cm, but most of the metal (mean 87%) remained in the upper 5 cm of soil.

Chromium compounds are very persistent in water. Most of the chromium in surface waters may be present in particulate form as sediment. Some of the particulate chromium would remain as suspended matter and ultimately be deposited in sediments.

Lead

Certain uses of lead have created situations whereby the element has become widely dispersed in the environment. The use of lead as an additive in gasoline beginning in the 1920's resulted in lead emissions as an aerosol in exhaust gases. Large amounts of lead are also released in the smelting of ores and burning of coal. The primary modes of lead releases into the environment are atmospheric fallout, runoff and wastewater discharges. Lead is retained in the upper 2 to 5 cm of soil especially in soils with at least 5% organic matter and a pH greater than 5. It will slowly undergo speciation to the more insoluble sulfate, sulfide, oxide and phosphate salts. In water, lead is effectively removed from the water column to the sediment by adsorption to organic matter and clay minerals. Lead does not appear to bioaccumulate significantly in fish.

The release of leaded fuels and battery recycling in the former Paul's Auto Yard is likely to have been the largest contributor of lead at the Property.

Selenium

Selenium is used extensively in the manufacture and production of glass, pigments, rubber, metal alloys, textiles, petroleum, medical therapeutic agents, and photographic emulsions. Selenium dioxide is the most widely used selenium compound in industry. It is used as an oxidizing agent in drug and other chemical manufacturing, a catalyst in organic syntheses, and an antioxidant in lubricating oils.

The toxicity of selenium depends on whether it is in the biologically active oxidized form. In alkaline soils and oxidizing conditions, selenium may be oxidized sufficiently to maintain the availability of its biologically active form, and cause plant uptake of the metal to be increased.

In acidic or neutral soils, it tends to remain relatively insoluble and the amount of biologically available selenium should steadily decrease. Selenium volatilizes from soils when converted to volatile selenium compounds (such as dimethyl selenide, dimethyl diselenide and others) by microorganisms.

5.4.4 Fate and Transport Assessment

The VOC RO soil exceedances (benzene and tetrachloroethene) were limited to the Section 2 portion of the former Paul's Auto Yard. Both of these compounds would be expected to volatilize and migrate readily to the ambient air, surface water run-off, and soil to groundwater. While these compounds have not been detected in groundwater samples at the site, both would be highly mobile within the aquifer. Benzene is a light, non-aqueous phase liquid (LNPL), which would migrate in the upper portion of the aquifer; tetrachloroethene is a dense, non-aqueous phase liquid (DNPL), which would migrate in the lower portion of the aquifer.

The PNA RO exceedances (benzo[a]pyrene and benzo[b]fluoranthene) were limited to the Section 2 portion of Paul's Auto Yard and a sediment sample (SD-4) in the southwest corner of the Greenspace.

Both of these compounds would not be expected to volatilize and migrate readily. These compounds have not been detected in groundwater samples at the site and would not readily leach to the groundwater. Both of these compounds are DNPLs, which would migrate in the lower portion of the aquifer/surface water body.

The Metals RO exceedances (arsenic, chromium, selenium) in surface soil and sediment within the Greenspace sand mine and south of the Pilot Section 4 study area were below regional sediment background levels (see *Regional Background Sediment Levels for Metals* in Section 5.2.1) for Lake County and Residential VRP goals.

The Metals RO exceedances (arsenic, cadmium, chromium, lead, selenium) in soil within the former Paul's Auto Yard were significant and have the potential to migrate via surface runoff, dust emissions, and to groundwater. While arsenic can leach readily to the groundwater, cadmium, chromium, lead (unless it speciates), and selenium are not likely to leach to groundwater. Based on the non-hazardous TCLP results, there is only a limited potential for metals leaching to groundwater at the site.

The VOC RO exceedances for VOCS in groundwater were limited to methyl t-butyl ether (MTBE). MTBE would be expected to volatilize and migrate very readily to the ambient air, surface water run-off, and soil to groundwater. MTBE is highly mobile within the aquifer and is an LNPL, which would migrate in the upper portion of the aquifer.

The Metal RO exceedances (arsenic, cadmium, lead, selenium) in groundwater were encountered across the site, but with slightly more consistent and higher concentrations within the former Paul's Auto Yard. The metals would not be expected to migrate readily within the aquifer.

5.5 Recommendations

Additional investigation/assessment is recommended for the following:

- Remedial or mitigation measures to address potential human and ecological risk posed by the impacted fill material/shallow soils at Paul's Auto Yard.

- Collection of groundwater samples (via low flow sampling methods) for RCRA metals on a quarterly basis for a minimum of one year. Further groundwater monitoring is required to: 1) evaluate for potential seasonal variations in concentration and groundwater flow, 2) be protective of potential human and ecological receptors, and 3) substantiate the decreasing trend in groundwater concentrations observed between Rounds 1 and 2.

- Confirmation/delineation of an isolated sediment sample (SD-4), located in the southeast corner of the Greenspace Section 5, that had elevated PNAs.

- Collection of background samples to confirm literature-based background metal values.

- Groundwater modeling to demonstrate the extent of the Greenspace dewatering pump capture zone, specifically for potential contaminant migration to identified up-gradient ecologically sensitive areas.

SECTION 6.0

6.0 REFERENCES

Drever, James I. (1997). The Geochemistry of Natural Waters: Surface and Groundwater Environments (3rd ed.). Prentice Hall.

Driscoll, F.G. (1986). Groundwater and Wells. St. Paul: Johnson Division.

Freeze, R.A., and Cherry, J.A. (1979). Groundwater. Prentice-Hall.

Howard, Philip H. (1990). Handbook of Environmental Fate and Exposure Data for Organic Chemicals. (Vol. 1). Chelsea, Michigan: Lewis Publishers.

Indiana Department of Environmental Management (IDEM). (1996). Voluntary Remediation Program Resource Guide. Indianapolis: Office of Environmental Response.

Indiana Department of Natural Resources Division of Water. (1994). Water Resource Availability in the Lake Michigan Region, Indiana. (Water Resource Assessment 94-4).

Puls, Robert W., & Barcelona, Michael J. (1996). Ground Water Issue: Low-Flow (Minimal Drawdown) Ground-Water Sampling Procedures. Washington, D.C.: USEPA Office of Research and Development, Office of Solid Waste and Emergency Response. (EPA/540/s-95/504).

United States Department of Agriculture (USDA). (1992). Lake County Soil Survey, Lake County Indiana.

United States Environmental Protection Agency (USEPA). (1989). Risk Assessment Guidance for Superfund (Vol. 1). Human Health Evaluation Manual (Part A) Interim Final. Washington, D.C.: Office of Solid Waste and Emergency Response. (EPA/540/1-89-002).

United States Environmental Protection Agency (USEPA). (1990). Groundwater: Ground Water and Contamination. (Vol. 1). Washington, D.C. (EPA/625/6-90/016a).

United States Environmental Protection Agency (USEPA). (1991). Methodology. Groundwater. (Vol. 2). Washington, D.C. (EPA/625/6-90/016b).

United States Environmental Protection Agency (USEPA). (1991). Laboratory Guidelines for Evaluating Organic Analyses. Washington, D.C.

United States Environmental Protection Agency (USEPA). (1992). Drinking Water Regulations and Health Advisories. Washington, D.C.: USEPA Office of Water.

United States Geological Survey (USGS). (1994). Hydrogeologic Atlas of Aquifers in Indiana, Water Resource Investigations Report. (92-4142).

Wente S.P. (1994). Sediment Background Concentration, Distribution of 172 Potential Pollutants in Indiana. Lafayette, Indiana: Purdue University, Department of Forestry and Natural Resources.

TABLES

TABLES

Table 1
J-Pit Redevelopment
Phase II Site Assessment
Paul's Auto Yard Sampling Log

Boring No.	Soil Description	Depth to Water	End of Boring	Sample Interval No.	Northing	Easting
LS-1	Sand and black fines, trace gravel (disturbed), banding At 4': Sand, trace silt, fines, light brown	7.5'	8'	A, C	41° 34.837	87° 24.765
LS-2	Silt, plastic, plant roots At 2': Banding of silt and sand At 4': Sand, trace silt, fines, brown	7'	8'	A, B, B-MS/MSD	41° 34.835	87° 24.729
LS-3	Topsoil, sand, organics, black At 1.5': Sand, trace silt, fines, light brown	4'	8'	A, C	41° 34.841	87° 24.689
LS-4	Topsoil, sand, organics, black At 0.5': Sand, trace silt, fines, light brown	5'	8'	A	41° 34.839	87° 24.643
LS-5	Fill (silt, rock, brick, fines)	-	Refusal at 3.5'	A	41° 34.	87° 24.
LS-6 (MW-17)	Fill (gravel, tire fragments, disturbed sand) At 2.5': Banding of sand At 3.5': Sand, trace silt, fines, light brown	3'	12.5'	A, B	41° 34.821	87° 24.559
LS-7	Topsoil Sand, trace silt, fines, light brown	-	1.5'	A	41° 34.835	87° 24.523
LS-8	Fill, (slag, concrete, black fines) At 5': Sand, trace silt, fines, light brown	8.5'	12'	A, B, B-Dup, C	41° 34.804	87° 24.766
LS-9	Fill (gravel, concrete, fine grained sand) At 2': Charred wood	-	Refusal at 3.5'	A, B	41° 34.805	87° 24.729
LS-10	Fill (gravel, sand, tire fragments, plastic tubing fragments, black) At 3': Sand, trace silt, fines, light brown	6.5'	12'	A, B, D	41° 34.803	87° 24.687
LS-11	Fill (concrete, glass fragments, wood fragments, grey) At 4': Sand, trace silt, fines, light brown At 6': 6" Peat layer	6'	12'	A, A-Dup, B, C	41° 34.800	87° 24.647
LS-12	Fill (concrete, brick, wood, plastic tubing fragments, black fines) At 5': Sand, trace silt, fines, light brown	7'	8'	A, B, B-Dup, C	41° 34.800	87° 24.601
LS-13	Fill (Brick, concrete, rubber fragments, black fines, sand)	-	Refusal at 5'	A, B	41° 34.796	87° 24.559
LS-14	Topsoil, roots Sand, trace silt, fines, light brown	4'	8'	A	41° 34.793	87° 24.534
LS-15	Initial Refusal Offset 5' North Fill (concrete, black fines, plastic fragments) Sand, trace silt, fines, light brown	5'	8'	A, C	41° 34.773	87° 24.690
LS-16	Fill (topsoil, roots, wire, dark brown At 4': 4" Peat layer Sand, trace silt, fines, light brown	6'	8'	A, B	41° 34.763	87° 24.646
LS-17	Fill (brick, concrete, sand, rubber fragments)	-	Refusal at 4'	A, B	41° 34.788	87° 24.816
LS-18	Fill (sand, silt, plastic fragments, rubber fragments, wire) At 2': Sand, trace silt, fines, light brown	4.5'	12'	A, B	41° 34.778	87° 24.573
LS-19	Hand Auger Sand, trace gravel, rubber fragments (disturbed), brown Sand, trace silt, fines, light brown	-	2'	A, A-MS/MSD	41° 34.790	87° 24.855
LS-20	Fill (glass, gravel, sand, black fines) At 2': Sand, trace silt, fines, light brown	4.5'	8'	A, B	41° 34.740	87° 24.685
LS-21	Moss, topsoil At 0.5': Sand, trace silt, fines, light brown	5'	8'	A, B	41° 34.732	87° 24.645
LS-22	Sand, trace silt, fines, light brown	5'	8'	A, A-Dup, C	41° 34.727	87° 24.612
LS-23	Topsoil, sand, roots, grey Sand, trace silt, fines, light brown	5'	8'	A, B	41° 34.738	87° 24.571
LS-24	Sand, trace silt, roots, fines, light brown, banding	4.5'	8'	A, B	41° 34.725	87° 24.519
LS-25	Topsoil, sand, silt At 2': Sand, trace silt, fines, light brown	-	8'	A, B	41° 34.846	87° 24.811
LS-26	Fill (silt, sand, concrete, roots, glass fragments, wood fragments, grey) At 5': Sand, trace silt, fines, light brown	-	8'	A, B	41° 34.825	87° 24.811
LS-27	Fill (sand, rubber fragments, wire, black fines) At 3': Peat At 3.5': Sand, trace silt, fines, light brown	-	8'	A, B	41° 34.817	87° 24.836
LS-28	Fill (silt, sand, concrete, black) At 2.5': Sand, trace silt, fines, light brown	-	8'	A, A-Dup, B, C	41° 34.817	87° 24. 802
LS-29	Fill (black fines, glass fragments, sand), peat At 3.5': Sand, trace silt, fines, brown	-	8'	A, B, -3	41° 34.810	87° 24.811
LS-30	Fill (gravel, black fines, sand) At 3': Sand, trace silt, fines, brown At 5': 6" Peat layer	-	8'	A, B	41° 34.791	87° 24.811
LS-31	Fill (rock, brick, glass fragments, metal fragments, black fines)	-	Refusal at 1.5'	A	41° 34.797	87° 24.842

Table 1
J-Pit Redevelopment
Phase II Site Assessment
Paul's Auto Yard Sampling Log

Boring No.	Soil Description	Depth to Water	End of Boring	Sample Interval No.	Northing	Easting
LS-32	Fill (black fines, gravel, metal fragments) At 3': Sand, trace silt, fines, light brown	-	8'	A, B	41° 34.839	87° 24.866
LS-33	Fill (concrete, slag, black fines) Sand, trace silt, fines, light brown	-	Refusal at 1.5'	A	41° 34.833	87° 24.815
LS-34	Fill (fines, gravel, brown-black) At 3.5' Sand (discolored) Sand, trace silt, fines, brown	10'	12'	A, B, C	41° 34.	87° 24.
LS-35	Topsoil (4" layer), fine grained sand, trace silt, light brown	-	1.5'	A,	41° 34.784	87° 24.805
LS-36	Fill (disturbed sand, trace silt, gravel) At 0.5': Sand, trace silt, fines, light brown	-	8'	A, B	41° 34.798	87° 24.855
LS-37	Fill (slag, rubber fragments, metal fragments, black fines) At 2.5': Sand, trace silt, fines, light brown	-	8'	A, B	41° 34.780	87° 24.854
LS-38	Topsoil (4" layer) Sand, trace silt, fines, light brown	7'	8'	A, A-Dup, B	41° 34.844	87° 24.764
LS-39	Fill (rock, metal fragments, wood fragments, sand) At 2': Sand, trace silt, fines, light brown	6.5'	8'	A, B, B-MS/MSD, C	41° 34.815	87° 24.738
LS-40	Sand, trace silt, fines, light grey	5'	8'	A, B	41° 34.798	87° 24.734
LS-41	Sand (disturbed), paper, plastic fragments, roots At 2.5': Sand, trace silt, fines, light brown	5'	8'	A, B	41° 34.814	87° 24.687
LS-42	Fill (black fines, sand, trace gravel) At 2': Sand, trace silt, fines, brown	5'	8'	A, B	41° 34.803	87° 24.710
LS-43	Fill (brick, gravel, sand) At 3': Sand, trace silt, fines, light brown	5'	8'	A, B, C, C-Dup	41° 34.814	87° 24.648
LS-44	Fill (asphalt, brick, gravel, wood fragments, black) At 3': Sand, trace silt, fines, light brown	3.5'	8'	A, B	41° 34.792	87° 24.545
LS-45	Fill (sand, gravel, black fines) Sand, trace silt, fines, light brown	3.5'	8'	A, B	41° 34.808	87° 24.558
LS-46	Fill (sand, fines, foam rubber fragments, gravel, black) Sand, trace silt, fines, light brown	3.5'	8'	A, B	41° 34.810	87° 24.600
LS-47	Fill (slag, gravel, grey) At 2': Sand, trace silt, fines, light brown	5'	8'	A, B, B-MS/MSD	41° 34.803	87° 24.634
LS-48	Topsoil, sand, silt, some organics Sand, trace silt, fines, light brown	4.5'	8'	A, A-Dup, B	41° 34.734	87° 24.677
LS-49	Fill (disturbed topsoil, glass fragments), 3 to 5" peat layer At 2': Sand, trace silt, fines, light brown	4.5'	8'	A, B	41° 34.741	87° 24.695
LS-50	Fill (disturbed topsoil, trace slag, metal fragments) At 1': Sand, trace silt, fines, light brown	4.5'	8'	A, B, B-Dup	41° 34.722	87° 24.689
LS-51	Fill (silt, sand, little glass fragments, gravel) At 2': Sand, trace silt, fines, light brown, some banding	4.5'	8'	A, A-MS/MSD, B	41° 34.760	87° 24.675
LS-52	Topsoil, silt, organics, sand (disturbed) At 2': Sand, trace silt, fines, light brown	4.5'	8'	A, B, B-Dup	41° 34.741	87° 24.605
LS-53	Fill (wood fragments, black fines, peat) At 2': Sand, trace silt, fines, light brown	4.5'	8'	A, B	41° 34.754	87° 24.571
LS-54	Fill (organic silt, foam rubber, glass fragments) At 2.5': Sand, trace silt, fines, light brown	5'	8'	A, A-Dup, B	41° 34.768	87° 24.663
LS-55	Fill (wood fragments, plastic fragments, gravel) At 2': Sand, trace silt, fines, light brown	5'	8'	A, A-MS/MSD, B	41° 34.761	87° 24.716
LS-56	Fill (black fines, rubber fragments, slag)	-	Refusal at 3'	A, B	41° 34.806	87° 24.755
LS-57	Fill (black fines, brick, slag)	-	Refusal at 3.5'	A, B	41° 34.801	87° 24.664
LS-58	Fill (silt, brick, concrete, black to brown) At 4': Sand, trace silt, fines, light brown	4.5'	8'	A, B	41° 34.799	87° 24.623
LS-59	Fill (fines, yellow brick, glass fragments) At 3': 6" Peat layer At 3.5': Sand, trace silt, fines, light brown	4.5'	8'	A, B	41° 34.798	87° 24.583
LS-60	Fill (fines, gravel, slag) At 4': Sand, trace silt, fines, grey	5'	8'	A, B	41° 34.782	87° 24.560
LS-61	Topsoil, sand, silt, some organics At 0.3': Sand, trace silt, fines, light brown	-	1.5'	A	41° 34.846	87° 24.570
LS-62	Topsoil, sand, silt, some organics At 0.5': Sand, trace silt, fines, brown	-	1.5'	A	41° 34.736	87° 24.495
LS-63	Topsoil, sand, silt, some organics At 0.5': Sand, trace silt, fines, brown	-	1.5'	A	41° 34.775	87° 24.883
LS-64	Topsoil, sand, silt, some organics At 0.5': Sand, trace silt, fines, brown	-	1.5'	A	41° 34.806	87° 24.924

Table 2 / Section 1
J-PIT Redevelopment
Phase II Site Assessment
Surface Soil Analytical Results

	VRP Cleanup Goals		RISC Cleanup Goals			
	Surface Soil Nonresidential (mg/kg)	Surface Soil Residential (mg/kg)	Surface Soil Industrial (mg/kg)	Surface Soil Residential (mg/kg)	S-1C 11/05/02	S-1C D 11/05/02
Semivolatile Organic Compounds						
Anthracene	10,000.00	10,000.00	51	51	x	x
Benzo[a]anthracene	79.45	0.88	15	5.0	x	x
Benzo[a]pyrene	7.94	0.66	1.5	0.50	x	x
Benzo[b]fluoranthene	79.45	0.88	15	5.0	x	x
Benzo[g,h,i]perylene	NA	NA	(1)	(1)	x	x
Benzo[k]fluoranthene	794.52	8.77	39	39	x	x
Bis(2-ethylhexyl)phthalate	4,142.86	45.71	980	300	x	x
Chrysene	7,945.21	87.67	25	25	x	x
Di-n-butyl phthalate	10,000.00	5,400.00	2,000	2,000	x	x
Di-octyl-phthalate	10,000.00	5,400.00	(1)	(1)	x	x
Dibenz[a,h]anthracene	7.95	0.66	1.5	0.50	x	x
Dimethyl phthalate	10,000.00	10,000.00	1,300	450	x	x
Fluoranthene	10,000.00	2,160.00	880	880	x	x
Fluorene	10,000.00	10,000.00	1,100	170	x	x
Ideno[1,2,3-cd]pyrene	79.45	0.88	3.1	3.1	x	x
Phenanthrene	NA	NA	(1)	(1)	x	x
Phenol	10,000.00	10,000.00	320	110	x	x
Pyrene	10,000.00	8,100.00	570	570	x	x
Volatile Organic Compounds						
Methylene chloride	(1)	(1)	1.8	0.023	x	x
Metals						
Mercury	122.40	16.20	32	2.1	--	--
Arsenic	612.00	81.00	20	3.9	1.2	3.8
Barium	10,000.00	10,000.00	5,900	1,600	15	16
Cadmium	1,020.00	135.00	77	7.5	0.45	1.4
Chromium	10,000.00	1,350.00	120	38	2.7	13
Lead	NA	NA	230	81	21	25
Selenium	10,000.00	1,350.00	53	5.2	--	--

NOTES: *Data Quality Objectives and Cleanup Goals per Indiana Department of Environmental Management, in the Resource Guide for the Indiana Voluntary Remediation Program (VRP July 1996) and Risk Integrated System of Closure Technical Guide - Appendix 1 (RISC February 15, 2001).*

All values are mg/kg (or parts per million).

All samples taken at a depth of 0-2'.

1 - Analytic specific cleanup goal not listed in VRP or RISC cleanup goals

2 - Exceeds RISC Residential cleanup goal only

3 - Exceeds RISC Industrial and Residential cleanup goals

J - Estimated value detected below reporting limits (metals/organics)

NA - Not Applicable

"--" - Data point below reporting values

"x" - Parameter not analyzed

Table 2 / Section 2
J-PIT Redevelopment
Phase II Site Assessment
Surface Soil Analytical Results

	VRP Cleanup Goals		RISC Cleanup Goals					
	Surface Soil Nonresidential (mg/kg)	Surface Soil Residential (mg/kg)	Surface Soil Industrial (mg/kg)	Surface Soil Residential (mg/kg)	SS-2-01[4] 11/07/02	S-2C 11/08/02	SS-01-729 07/29/03	SS-2-729 07/29/03
Semivolatile Organic Compounds								
Anthracene	10,000.00	10,000.00	51	51	--	x	--	--
Benzo[a]anthracene	79.45	0.88	15	5.0	0.120	x	--	--
Benzo[a]pyrene	7.94	0.66	1.5	0.50	--	x	--	--
Benzo[b]fluoranthene	79.45	0.88	15	5.0	--	x	--	--
Benzo[g,h,i]perylene	NA	NA	(1)	(1)	--	x	--	--
Benzo[k]fluoranthene	794.52	8.77	39	39	--	x	--	--
Bis(2-ethylhexyl)phthalate	4,142.86	45.71	980	300	0.050 J	x	--	44.000
Chrysene	7,945.21	87.67	25	25	0.130	x	--	--
Di-n-butyl phthalate	10,000.00	5,400.00	2,000	2,000	0.060	x	--	--
Di-octyl-phthalate	10,000.00	5,400.00	(1)	(1)	--	x	--	12.000
Dibenz[a,h]anthracene	7.95	0.66	1.5	0.50	--	x	--	--
Dimethyl phthalate	10,000.00	10,000.00	1,300	450	--	x	--	--
Fluoranthene	10,000.00	2,160.00	880	880	0.220	x	--	--
Fluorene	10,000.00	10,000.00	1,100	170	--	x	--	--
Ideno[1,2,3-cd]pyrene	79.45	0.88	3.1	3.1	--	x	--	--
Phenanthrene	NA	NA	(1)	(1)	0.076	x	--	--
Phenol	10,000.00	10,000.00	320	110	--	x	--	--
Pyrene	10,000.00	8,100.00	570	570	0.210	x	--	--
Volatile Organic Compounds								
Methylene chloride	(1)	(1)	1.8	0.023	--	x	--	--
Metals								
Mercury	122.40	16.20	32	2.1	0.03 J	--	0.042	0.74
Arsenic	612.00	81.00	20	3.9	2.6	2.0	**4.2**[2]	**13**[2]
Barium	10,000.00	10,000.00	5,900	1,600	20	15	55	340
Cadmium	1,020.00	135.00	77	7.5	0.83	0.56	1.0	**10**[2]
Chromium	10,000.00	1,350.00	120	38	5.1	12	5.6	**90**[2]
Lead	NA	NA	230	81	31	23	**130**[2]	**1,300**[3]
Selenium	10,000.00	1,350.00	53	5.2	2.0	--	--	2.3

NOTES: *Data Quality Objectives and Cleanup Goals per Indiana Department of Environmental Management, in the Resource Guide for the Indiana Voluntary Remediation Program (VRP July 1996) and Risk Integrated System of Closure Technical Guide - Appendix 1 (RISC February 15, 2001).*

All values are mg/kg (or parts per million).

All samples taken at a depth of 0-2'.

1 - Analytic specific cleanup goal not listed in VRP or RISC cleanup goals

2 - Exceeds RISC Residential cleanup goal only

3 - Exceeds RISC Industrial and Residential cleanup goals

4 - Although offsite, sample was included in Section 2.

J - Estimated value detected below reporting limits (metals/organics)

NA - Not Applicable

"--" - Data point below reporting values

"x" - Parameter not analyzed

Table 2 / Section 3
J-PIT Redevelopment
Phase II Site Assessment
Surface Soil Analytical Results

	VRP Cleanup Goals		RISC Cleanup Goals										
	Surface Soil Nonresidential (mg/kg)	Surface Soil Residential (mg/kg)	Surface Soil Industrial (mg/kg)	Surface Soil Residential (mg/kg)	S-3C	SB-1-01A	SB-2-01A	SB-3-01A	SB-4-01A	SB-5-01A	SB-6-01A	SB-7-01A	SB-8-01A
					11/04/02	11/14/02	11/14/02	11/14/02	11/14/02	11/14/02	11/14/02	11/14/02	11/14/02
Semivolatile Organic Compounds													
Anthracene	10,000.00	10,000.00	51	51	x	x	x	x	x	x	x	x	x
Benzo[a]anthracene	79.45	0.88	15	5.0	x	x	x	x	x	x	x	x	x
Benzo[a]pyrene	7.94	0.66	1.5	0.50	x	x	x	x	x	x	x	x	x
Benzo[b]fluoranthene	79.45	0.88	15	5.0	x	x	x	x	x	x	x	x	x
Benzo[g,h,i]perylene	NA	NA	(1)	(1)	x	x	x	x	x	x	x	x	x
Benzo[k]fluoranthene	794.52	8.77	39	39	x	x	x	x	x	x	x	x	x
Bis(2-ethylhexyl)phthalate	4,142.86	45.71	980	300	x	x	x	x	x	x	x	x	x
Chrysene	7,945.21	87.67	25	25	x	x	x	x	x	x	x	x	x
Di-n-butyl phthalate	10,000.00	5,400.00	2,000	2,000	x	x	x	x	x	x	x	x	x
Di-octyl-phthalate	10,000.00	5,400.00	(1)	(1)	x	x	x	x	x	x	x	x	x
Dibenz[a,h]anthracene	7.95	0.66	1.5	0.50	x	x	x	x	x	x	x	x	x
Dimethyl phthalate	10,000.00	10,000.00	1,300	450	x	x	x	x	x	x	x	x	x
Fluoranthene	10,000.00	2,160.00	880	880	x	x	x	x	x	x	x	x	x
Fluorene	10,000.00	10,000.00	1,100	170	x	x	x	x	x	x	x	x	x
Ideno[1,2,3-cd]pyrene	79.45	0.88	3.1	3.1	x	x	x	x	x	x	x	x	x
Phenanthrene	NA	NA	(1)	(1)	x	x	x	x	x	x	x	x	x
Phenol	10,000.00	10,000.00	320	110	x	x	x	x	x	x	x	x	x
Pyrene	10,000.00	8,100.00	570	570	x	x	x	x	x	x	x	x	x
Volatile Organic Compounds													
Methylene chloride	(1)	(1)	1.8	0.023	x	x	x	x	x	x	x	x	x
Metals													
Mercury	122.40	16.20	32	2.1	0.22	x	x	x	x	x	x	x	x
Arsenic	612.00	81.00	20	3.9	**5.4**(2)	x	x	x	x	x	x	x	x
Barium	10,000.00	10,000.00	5,900	1,600	150	x	x	x	x	x	x	x	x
Cadmium	1,020.00	135.00	77	7.5	5.3	x	x	x	x	x	x	x	x
Chromium	10,000.00	1,350.00	120	38	**46**(2)	x	x	x	x	x	x	x	x
Lead	NA	NA	230	81	**490**(3)	**1,500**(3)	2.5	**12,000**(3)	**960**(3)	**1,500**(3)	8.2	64	14
Selenium	10,000.00	1,350.00	53	5.2	--	x	x	x	x	x	x	x	x

NOTES: *Data Quality Objectives and Cleanup Goals per Indiana Department of Environmental Management, in the Resource Guide for the Indiana Voluntary Remediation Program (VRP July 1996) and Risk Integrated System of Closure Technical Guide - Appendix 1 (RISC February 15, 2001).*

All values are mg/kg (or parts per million).

All samples taken at a depth of 0-2'.

1 - Analytic specific cleanup goal not listed in VRP or RISC cleanup

2 - Exceeds RISC Residential cleanup goal only

3 - Exceeds RISC Industrial and Residential cleanup goals

J - Estimated value detected below reporting limits (metals/organics

NA - Not Applicable

"--" - Data point below reporting values

"x" - Parameter not analyzed

Table 2 / Section 4
J-PIT Redevelopment
Phase II Site Assessment
Surface Soil Analytical Results

	VRP Cleanup Goals		RISC Cleanup Goals						
	Surface Soil Nonresidential (mg/kg)	Surface Soil Residential (mg/kg)	Surface Soil Industrial (mg/kg)	Surface Soil Residential (mg/kg)	SS-1-01[4]	SS-4C	SS-3-729	SS-4-729	SS-5-729
					11/07/02	11/05/02	07/29/03	07/29/03	07/29/03
Semivolatile Organic Compounds									
Anthracene	10,000.00	10,000.00	51	51	--	x	--	--	--
Benzo[a]anthracene	79.45	0.88	15	5.0	0.150	x	--	--	--
Benzo[a]pyrene	7.94	0.66	1.5	0.50	0.170	x	--	--	--
Benzo[b]fluoranthene	79.45	0.88	15	5.0	0.440	x	--	--	--
Benzo[g,h,i]perylene	NA	NA	(1)	(1)	--	x	--	--	--
Benzo[k]fluoranthene	794.52	8.77	39	39	0.085	x	--	--	--
Bis(2-ethylhexyl)phthalate	4,142.86	45.71	980	300	0.370	x	--	--	--
Chrysene	7,945.21	87.67	25	25	0.190	x	--	--	--
Di-n-butyl phthalate	10,000.00	5,400.00	2,000	2,000	0.070 J	x	--	--	--
Di-octyl-phthalate	10,000.00	5,400.00	(1)	(1)	--	x			--
Dibenz[a,h]anthracene	7.95	0.66	1.5	0.50	--	x	--	--	--
Dimethyl phthalate	10,000.00	10,000.00	1,300	450	--	x	--	--	--
Fluoranthene	10,000.00	2,160.00	880	880	0.250	x	--	--	--
Fluorene	10,000.00	10,000.00	1,100	170	--	x	--	--	--
Ideno[1,2,3-cd]pyrene	79.45	0.88	3.1	3.1	0.140	x	--	--	--
Phenanthrene	NA	NA	(1)	(1)	0.082	x	--	--	--
Phenol	10,000.00	10,000.00	320	110	--	x	--	--	--
Pyrene	10,000.00	8,100.00	570	570	0.160	x	--	--	--
Volatile Organic Compounds									
Methylene chloride	(1)	(1)	1.8	0.023	--	x	--	--	--
Metals									
Mercury	122.40	16.20	32	2.1	--	0.02 J	--	--	0.044
Arsenic	612.00	81.00	20	3.9	**13**[2]	2.7	1.9	**15**[2]	3.1
Barium	10,000.00	10,000.00	5,900	1,600	690	7.1	24	40	15
Cadmium	1,020.00	135.00	77	7.5	1.8	0.50	0.64	1.1	0.64
Chromium	10,000.00	1,350.00	120	38	13	1.8	1.7	3.9	1.3
Lead	NA	NA	230	81	18	16	25	24	29
Selenium	10,000.00	1,350.00	53	5.2	**8.4**[2]	--	--	--	--

NOTES: *Data Quality Objectives and Cleanup Goals per Indiana Department of Environmental Management, in the Resource Guide for the Indiana Voluntary Remediation Program (VRP July 1996) and Risk Integrated System of Closure Technical Guide - Appendix 1 (RISC February 15, 2001).*

All values are mg/kg (or parts per million).

All samples taken at a depth of 0-2'.

1 - Analytic specific cleanup goal not listed in VRP or RISC cleanup goals

2 - Exceeds RISC Residential cleanup goal only

3 - Exceeds RISC Industrial and Residential cleanup goals

4 - Although offsite, sample was included in Section 4.

J - Estimated value detected below reporting limits (metals/organics)

NA - Not Applicable

"--" - Data point below reporting values

"x" - Parameter not analyzed

Table 2 / Section 5
J-PIT Redevelopment
Phase II Site Assessment
Surface Soil Analytical Results

	VRP Cleanup Goals		RISC Cleanup Goals								
	Surface Soil Nonresidential (mg/kg)	Surface Soil Residential (mg/kg)	Surface Soil Industrial (mg/kg)	Surface Soil Residential (mg/kg)	SS-3-01	SS-4-01	SS-5-01	SS-5-01D	SS-6-01	SS-7-01	S-5C
					11/07/02	11/07/02	11/07/02	11/07/02	11/07/02	12/11/02	11/08/02
Semivolatile Organic Compounds											
Anthracene	10,000.00	10,000.00	51	51	--	--	0.069	0.110	--	--	x
Benzo[a]anthracene	79.45	0.88	15	5.0	--	0.100	0.300	0.360	--	--	x
Benzo[a]pyrene	7.94	0.66	1.5	0.50	--	0.120	0.280	--	0.040	--	x
Benzo[b]fluoranthene	79.45	0.88	15	5.0	--	0.088	0.290	0.240	--	--	x
Benzo[g,h,i]perylene	NA	NA	(1)	(1)	--	0.092	0.190	0.190	--	--	x
Benzo[k]fluoranthene	794.52	8.77	39	39	--	0.075	0.170	0.220	--	--	x
Bis(2-ethylhexyl)phthalate	4,142.86	45.71	980	300	--	--	--	--	--	--	x
Chrysene	7,945.21	87.67	25	25	--	0.130	0.320	0.370	--	--	x
Di-n-butyl phthalate	10,000.00	5,400.00	2,000	2,000	--	--	--	--	--	--	x
Di-octyl-phthalate	10,000.00	5,400.00	(1)	(1)	--	--	--	--	--	--	x
Dibenz[a,h]anthracene	7.95	0.66	1.5	0.50	--	--	0.070 J	0.060 J	--	--	x
Dimethyl phthalate	10,000.00	10,000.00	1,300	450	--	--	--	--	0.060 J	--	x
Fluoranthene	10,000.00	2,160.00	880	880	--	--	0.580	0.870	0.050 J	--	x
Fluorene	10,000.00	10,000.00	1,100	170	0.040 J	--	--	--	--	--	x
Ideno[1,2,3-cd]pyrene	79.45	0.88	3.1	3.1	--	0.070 J	0.170	0.170	--	--	x
Phenanthrene	NA	NA	(1)	(1)	--	0.059	0.250	0.430	--	--	x
Phenol	10,000.00	10,000.00	320	110	--	--	--	--	--	--	x
Pyrene	10,000.00	8,100.00	570	570	--	0.180	0.490	0.720	0.054	--	x
Volatile Organic Compounds											
Methylene chloride	(1)	(1)	1.8	0.023	0.011	--	0.0054	0.0053	0.0047	0.010 J	x
Metals											
Mercury	122.40	16.20	32	2.1	--	--	--	--	--	--	0.044
Arsenic	612.00	81.00	20	3.9	**8.6**(2)	**5.0**(2)	**8.1**(2)	**7.2**(2)	**6.0**(2)	**7.2**(2)	**4.2**(2)
Barium	10,000.00	10,000.00	5,900	1,600	41	60	45	44	45	49	32
Cadmium	1,020.00	135.00	77	7.5	1.1	1.2	1.3	1.2	1.5	2.6	1.4
Chromium	10,000.00	1,350.00	120	38	14	15	16	16	18	16	17
Lead	NA	NA	230	81	7.0	13	22	22	14	15	44
Selenium	10,000.00	1,350.00	53	5.2	**5.3**(2)	**5.6**(2)J	**5.6**(2)J	4.6	**6.2**(2)	**6.7**(2)	--

NOTES: *Data Quality Objectives and Cleanup Goals per Indiana Department of Environmental Management, in the Resource Guide for the Indiana Voluntary Remediation Program (VRP July 1996) and Risk Integrated System of Closure Technical Guide - Appendix 1 (RISC February 15, 2001).*

All values are mg/kg (or parts per million).

All samples taken at a depth of 0-2'.

1 - Analytic specific cleanup goal not listed in VRP or RISC cleanup goals

2 - Exceeds RISC Residential cleanup goal only

3 - Exceeds RISC Industrial and Residential cleanup goals

J - Estimated value detected below reporting limits (metals/organics)

NA - Not Applicable

"--" - Data point below reporting values

"x" - Parameter not analyzed

Table 3 / Section 1
J-PIT Redevelopment
Phase II Site Assessment
Subsurface Soil Analytical Results

	VRP Cleanup Goals		RISC Cleanup Goals												
	Subsurface Soil Nonresidential (mg/kg)	Subsurface Soil Residential (mg/kg)	Subsurface Soil Industrial (mg/kg)	Subsurface Soil Residential (mg/kg)	SB-9-01	SB-9-02	SB-10-01	SB-10-01D	SB-11-01	SB-23-01	SB-24-01	SB-25-01	SB-26-01	SB-26-01D
					1-2'	14-15'	23-24'	23-24'	19-20'	9.5-11.5'	0-2.5'	20-21'	12-13'	12-13'
					11/04/02	11/04/02	11/05/02	11/05/02	11/05/02	11/08/02	11/13/02	11/13/02	11/13/02	11/13/02
Semivolatile Organic Compounds														
2,4-Dimethylphenol	(1)	(1)	25	9.0	--	--	--	--	--	--	--	--	--	--
2-Methylnaphthalene (2)	10,000.00	1,761.785	170	0.70	--	--	--	--	--	--	--	--	--	--
4-Chloroaniline	1,117.69	186.921	2.7	0.97	--	--	--	--	--	--	--	--	--	--
Anthracene	10,000.00	10,000.00	51	51	--	--	--	--	--	--	--	--	--	--
Benzo[a]anthracene	103.88	103.881	15	5.0	--	--	--	--	--	--	--	--	--	--
Benzo[a]pyrene	69.85	69.849	1.5	0.50	--	--	--	--	--	--	--	--	--	--
Benzo[b]fluoranthene	354.98	354.977	15	5.0	--	--	--	--	--	--	--	--	--	--
Benzo[g,h,i]perylene	NA	NA	(1)	(1)	--	--	--	--	--	--	0.057	0.040 J	0.040 J	--
Benzo[k]fluoranthene	3,759.12	501.638	39	39	--	--	--	--	--	--	--	--	--	--
Bis(2-ethylhexyl)phthalate	1,406.25	16.427	980	300	--	--	--	--	--	--	0.080	0.050 J	--	--
Butyl benzyl phthalate	10,000.00	10,000.00	930	930	--	--	--	--	--	--	--	--	--	--
Chrysene	10,000.00	379.273	25	25	--	--	--	--	--	--	--	--	--	--
Di-n-butyl phthalate	6,188.56	1,034.967	2,000	2,000	--	--	--	--	--	0.078	--	--	--	--
Di-n-octyl phthalate	10,000.00	2,318.850	(1)	(1)	--	--	--	--	--	--	--	--	--	--
Dibenzo[a,h]anthracene	69.86	69.863	1.5	0.50	--	--	--	--	--	--	0.060 J	0.050 J	0.050 J	0.040 J
Diethyl phthalate	10,000.00	10,000.00	1,300	450	--	--	--	--	--	--	--	--	--	--
Fluoranthene	10,000.00	2,305.040	880	880	--	--	--	--	--	--	--	--	--	--
Indeno[1,2,3-cd]pyrene	629.17	629.166	3.1	3.1	--	--	--	--	--	--	0.060 J	0.050 J	0.040 J	0.040 J
Naphthalene	10,000.00	1,761.785	170	0.70	--	--	--	--	--	--	--	--	--	--
Phenanthrene	NA	NA	(1)	(1)	--	--	--	--	--	--	--	--	--	--
Pyrene	10,000.00	10,000.00	570	570	--	--	--	--	--	--	--	--	--	--

NOTES: *Data Quality Objectives and Cleanup Goals per Indiana Department of Environmental Management, in the Resource Guide for the Indiana Voluntary Remediation Program (VRP July 1996) and Risk Integrated System of Closure Technical Guide - Appendix 1 (RISC February 15, 2001).*

All values are mg/kg (or parts per million).

1 - Analytic specific cleanup goal not listed in applicable cleanup goals

2 - Alternate cleanup criteria for Naphthalene was used

3 - Alternate cleanup criteria for Xylenes was used

4 - Exceeds RISC Residential cleanup goal only

5 - Exceeds RISC Industrial and Residential cleanup goals

6 - Exceeds both VRP Residential and RISC Residential cleanup goals

J - Estimated value detected below reporting limits (metals/organics)

NA - Not Applicable

"--" - Data point below reporting values

"x" - Parameter not analyzed

Table 3 / Section 1
J-PIT Redevelopment
Phase II Site Assessment
Subsurface Soil Analytical Results

	VRP Cleanup Goals		RISC Cleanup Goals											
	Subsurface Soil Nonresidential (mg/kg)	Subsurface Soil Residential (mg/kg)	Subsurface Soil Industrial (mg/kg)	Subsurface Soil Residential (mg/kg)	SB-9-01	SB-9-02	SB-10-01	SB-10-01D	SB-11-01	SB-23-01	SB-24-01	SB-25-01	SB-26-01	SB-26-01D
					1-2'	14-15'	23-24'	23-24'	19-20'	9.5-11.5'	0-2.5'	20-21'	12-13'	12-13'
					11/04/02	11/04/02	11/05/02	11/05/02	11/05/02	11/08/02	11/13/02	11/13/02	11/13/02	11/13/02
Volatile Organic Compounds														
1,1,2-Trichloroethane	1.05	0.035	0.30	0.030	--	--	--	--	--	--	--	--	--	--
2-Butanone	(1)	(1)	260	12	--	--	--	--	--	--	--	--	--	--
2-Hexanone	(1)	(1)	(1)	(1)	--	--	--	--	--	--	--	--	--	--
Acetone	136.29	22.793	41	3.1	--	--	--	--	--	--	--	--	--	--
Benzene	4.77	0.059	0.67	0.034	--	--	--	--	--	--	--	--	--	--
Carbon Disulfide	(1)	(1)	82	10	--	--	--	--	--	--	--	--	--	--
Dibromochloromethane	(1)	(1)	0.63	0.63	--	--	--	--	--	--	--	--	--	--
Ethylbenzene	1,000.00	834.372	200	13	--	--	--	--	--	--	--	--	--	--
m,p-Xylene (3)	1,000.00	1,000.00	410	190	--	--	--	0.003	--	--	--	--	--	--
Methylene chloride	(1)	(1)	1.8	0.023	0.0055 J	0.007 J	--	0.0079	0.007	--	0.0094	0.011	0.012	0.010
o-Xylene (3)	1,000.00	1,000.00	410	190	--	--	--	--	--	--	--	--	--	--
Styrene	(1)	(1)	720	3.5	--	--	--	--	--	--	--	--	--	--
Tetrachloroethene	8.01	0.227	0.64	0.058	--	--	--	--	--	--	--	--	--	--
Toluene	1,000.00	278.926	240	12	--	0.050	--	0.0035	0.0021	0.0025	--	--	--	--
Trichlorofluoromethane	(1)	(1)	(1)	(1)	--	--	--	--	--	--	--	--	--	--
Total Xylenes (3)	1,000.00	1,000.00	410	190	--	--	--	0.003	--	--	--	--	--	--
Metals														
Mercury	87.60	87.60	32	2.1	--	x	x	x	x	x	x	x	x	x
Arsenic	438.00	438.00	20	3.9	0.97	x	x	x	x	x	x	x	x	x
Barium	10,000.00	10,000.00	5,900	1,600	6.0	x	x	x	x	x	x	x	x	x
Cadmium	730.00	730.00	77	7.5	0.40	x	x	x	x	x	x	x	x	x
Chromium	7,3000.00	7300	120	38	2.0	x	x	x	x	x	x	x	x	x
Lead	NA	NA	230	81	3.9	x	x	x	x	x	x	x	x	x
Selenium	7,300.00	7,300.00	53	5.2	--	x	x	x	x	x	x	x	x	x
Silver	7,300.00	7,300.00	87	31	--	x	x	x	x	x	x	x	x	x

NOTES: *Data Quality Objectives and Cleanup Goals per Indiana Department of Environmental Management, in the Resource Guide for the Indiana Voluntary Remediation Program (VRP July 1996) and Risk Integrated System of Closure Technical Guide - Appendix 1 (RISC February 15, 2001).*

All values are mg/kg (or parts per million).

1 - Analytic specific cleanup goal not listed in VRP or RISC cleanup goals

2 - Alternate cleanup criteria for Naphthalene was used

3 - Alternate cleanup criteria for Xylenes was used

4 - Exceeds RISC Residential cleanup goal only

5 - Exceeds RISC Industrial and Residential cleanup goals

6 - Exceeds both VRP Residential and RISC Residential cleanup goals

J - Estimated value detected below reporting limits (metals/organics)

NA - Not Applicable

"--" - Data point below reporting values

"x" - Parameter not analyzed

Table 3 / Section 2
J-PIT Redevelopment
Phase II Site Assessment
Subsurface Soil Analytical Results

	VRP Cleanup Goals		RISC Cleanup Goals												
	Subsurface Soil Nonresidential (mg/kg)	Subsurface Soil Residential (mg/kg)	Subsurface Soil Industrial (mg/kg)	Subsurface Soil Residential (mg/kg)	SB-19-01	SB-20-01	SB-21-01	SB-22-01	SB-28-01	SB-28-02	SB-29-01	TP-01	TP-02	TP-03	LS-29-3
					19-20'	15-16'	2-4'	9-11'	2-3'	20-21'	3-4'	2-3'	2-3'	3-4'	2-3'
					11/08/02	11/08/02	11/08/02	11/08/02	11/20/02	11/20/02	11/20/02	11/11/02	11/11/02	11/12/02	07/24/03
Semivolatile Organic Compounds															
2.4-Dimethylphenol	(1)	(1)	25	9.0	--	--	0.100 J	--	--	--	--	--	--	--	x
2-Methylnaphthalene (2)	10,000.00	1,761.785	170	0.70	--	--	0.380	--	--	--	--	0.240	--	0.110	x
4-Chloroaniline	1,117.69	186.921	2.7	0.97	--	--	0.160	--	--	--	--	--	--	--	x
Anthracene	10,000.00	10,000.00	51	51	--	--	--	--	0.065	--	--	--	--	--	x
Benzo[a]anthracene	103.88	103.881	15	5.0	--	--	--	--	0.470	--	--	--	--	--	x
Benzo[a]pyrene	69.85	69.849	1.5	0.50	--	--	--	--	**0.620**(4)	--	--	--	--	--	x
Benzo[b]fluoranthene	354.98	354.977	15	5.0	--	--	--	--	0.570	--	--	--	--	--	x
Benzo[g,h,i]perylene	NA	NA	(1)	(1)	--	--	--	--	0.620	--	--	--	--	--	x
Benzo[k]fluoranthene	3,759.12	501.638	39	39	--	--	--	--	0.660	--	--	--	--	--	x
Bis(2-ethylhexyl)phthalate	1,406.25	16.427	980	300	--	--	0.055	0.040 J	0.084	--	--	0.062	--	--	x
Butyl benzyl phthalate	10,000.00	10,000.00	930	930	--	--	--	--	0.110	--	--	--	--	--	x
Chrysene	10,000.00	379.273	25	25	--	--	--	--	0.490	--	--	--	--	--	x
Di-n-butyl phthalate	6,188.56	1,034.967	2,000	2,000	--	--	--	--	--	--	--	--	--	--	x
Di-n-octyl phthalate	10,000.00	2,318.850	(1)	(1)	--	--	--	--	--	--	--	--	--	--	x
Dibenzo[a,h]anthracene	69.86	69.863	1.5	0.50	--	--	--	--	0.140	--	--	--	--	--	x
Diethyl phthalate	10,000.00	10,000.00	1,300	450	--	0.040 J	--	--	--	--	--	0.050 J	0.040 J	0.100 J	x
Fluoranthene	10,000.00	2,305.040	880	880	--	--	0.330	--	0.930	--	--	--	--	--	x
Indeno[1,2,3-cd]pyrene	629.17	629.166	3.1	3.1	--	--	--	--	0.450	--	--	--	--	--	x
Naphthalene	10,000.00	1,761.785	170	0.70	--	--	0.520	--	--	--	--	0.330	--	0.370	x
Phenanthrene	NA	NA	(1)	(1)	--	--	--	--	0.410	--	--	--	--	--	x
Pyrene	10,000.00	10,000.00	570	570	--	--	0.230	--	0.800	--	--	--	--	--	x

NOTES: *Data Quality Objectives and Cleanup Goals per Indiana Department of Environmental Management, in the Resource Guide for the Indiana Voluntary Remediation Program (VRP July 1996) and Risk Integrated System of Closure Technical Guide - Appendix 1 (RISC February 15, 2001).*

All values are mg/kg (or parts per million).

1 - Analytic specific cleanup goal not listed in VRP or RISC cleanup goals

2 - Alternate cleanup criteria for Naphthalene was used

3 - Alternate cleanup criteria for Xylenes was used

4 - Exceeds RISC Residential cleanup goal only

5 - Exceeds RISC Industrial and Residential cleanup goals

6 - Exceeds both VRP Residential and RISC Residential cleanup goals

J - Estimated value detected below reporting limits (metals/organics)

NA - Not Applicable

"--" - Data point below reporting values

"x" - Parameter not analyzed

Table 3 / Section 2
J-PIT Redevelopment
Phase II Site Assessment
Subsurface Soil Analytical Results

	VRP Cleanup Goals		RISC Cleanup Goals												
	Subsurface Soil Nonresidential (mg/kg)	Subsurface Soil Residential (mg/kg)	Subsurface Soil Industrial (mg/kg)	Subsurface Soil Residential (mg/kg)	SB-19-01	SB-20-01	SB-21-01	SB-22-01	SB-28-01	SB-28-02	SB-29-01	TP-01	TP-02	TP-03	LS-29-3
					19-20'	15-16'	2-4'	9-11'	2-3'	20-21'	3-4'	2-3'	2-3'	3-4'	2-3'
					11/08/02	11/08/02	11/08/02	11/08/02	11/20/02	11/20/02	11/20/02	11/11/02	11/11/02	11/12/02	07/24/03
Volatile Organic Compounds															
1,1,2-Trichloroethane	1.05	0.035	0.30	0.030	--	--	--	--	--	--	--	--	--	--	0.0067
2-Butanone	(1)	(1)	260	12	--	--	0.037	--	--	--	--	--	--	--	--
2-Hexanone	(1)	(1)	(1)	(1)	--	--	--	--	--	--	--	--	--	--	0.012
Acetone	136.29	22.793	41	3.1	--	--	0.110	--	--	--	--	0.170	0.045	1.400	--
Benzene	4.77	0.059	0.67	0.034	--	--	0.0059	--	--	--	--	0.015	--	**0.077**[(5)]	0.0015
Carbon Disulfide	(1)	(1)	82	10	--	--	--	--	--	--	--	--	--	--	--
Dibromochloromethane	(1)	(1)	0.63	0.63	--	--	--	--	0.0061	0.0055	0.0091	--	--	--	--
Ethylbenzene	1,000.00	834.372	200	13	--	--	0.190	--	--	--	0.0015	0.012	--	1.300	0.0042
m,p-Xylene (3)	1,000.00	1,000.00	410	190	0.0035	--	0.610	--	--	--	0.0051	0.770	--	8.200	0.030
Methylene chloride	(1)	(1)	1.8	0.023	--	--	--	--	0.011	0.0099	0.0096	**0.027**[(4)]	0.0088	**0.900**[(4)]	--
o-Xylene (3)	1,000.00	1,000.00	410	190	--	--	0.017	--	--	--	0.0015	0.072	--	0.270	0.0036
Styrene	(1)	(1)	720	3.5	--	--	--	--	--	--	--	--	--	--	--
Tetrachloroethene	8.01	0.227	0.64	0.058	--	--	--	--	0.0069	0.0069	0.012	0.052	--	**0.140**[(4)]	--
Toluene	1,000.00	278.926	240	12	--	--	0.0049	--	--	--	0.0020	--	--	--	--
Trichlorofluoromethane	(1)	(1)	(1)	(1)	--	--	--	--	--	--	--	--	--	--	--
Total Xylenes (3)	1,000.00	1,000.00	410	190	0.0035	--	0.650	--	--	--	0.0066	1.000	--	8.500	0.034
Metals												11/21/02	11/22/02	11/22/02	
Mercury	87.60	87.60	32	2.1	x	x	x	x	x	--	x	--	--	0.03	x
Arsenic	438.00	438.00	20	3.9	x	x	x	x	x	1.5	x	2.3	1.7	2.5	x
Barium	10,000.00	10,000.00	5,900	1,600	x	x	x	x	x	3.6	x	46	7.4	87	x
Cadmium	730.00	730.00	77	7.5	x	x	x	x	x	0.38	x	x	x	x	x
Chromium	7,3000.00	7300	120	38	x	x	x	x	x	3.4	x	2.0	0.72	6.8	x
Lead	NA	NA	230	81	x	x	x	x	x	1.9	x	7.2	2.0	5.8	x
Selenium	7,300.00	7,300.00	53	5.2	x	x	x	x	x	2.4	x	--	--	--	x
Silver	7,300.00	7,300.00	87	31	x	x	x	x	x	--	x	--	--	--	x

NOTES: *Data Quality Objectives and Cleanup Goals per Indiana Department of Environmental Management, in the Resource Guide for the Indiana Voluntary Remediation Program (VRP July 1996) and Risk Integrated System of Closure Technical Guide - Appendix 1 (RISC February 15, 2001).*

All values are mg/kg (or parts per million).

1 - Analytic specific cleanup goal not listed in VRP or RISC cleanup goals

2 - Alternate cleanup criteria for Naphthalene was used

3 - Alternate cleanup criteria for Xylenes was used

4 - Exceeds RISC Residential cleanup goal only

5 - Exceeds RISC Industrial and Residential cleanup goals

6 - Exceeds both VRP Residential and RISC Residential cleanup goals

J - Estimated value detected below reporting limits (metals/organics)

NA - Not Applicable

"--" - Data point below reporting values

"x" - Parameter not analyzed

Table 3 / Section 3
J-PIT Redevelopment
Phase II Site Assessment
Subsurface Soil Analytical Results

	VRP Cleanup Goals		RISC Cleanup Goals										
	Subsurface Soil Nonresidential (mg/kg)	Subsurface Soil Residential (mg/kg)	Subsurface Soil Industrial (mg/kg)	Subsurface Soil Residential (mg/kg)	SB-1-01	SB-2-01	SB-3-01	SB-4-01	SB-5-01	SB-6-01	SB-7-01	SB-7-02	SB-8-01
					2-3'	6-7'	3-4'	3-4'	2.5-3.5'	3.5-4'	0-1.5'	5-6.5'	6.5-7.5'
					11/04/02	11/04/02	11/04/02	11/04/02	11/04/02	11/04/02	11/04/02	11/04/02	11/04/02
Semivolatile Organic Compounds													
2,4-Dimethylphenol	(1)	(1)	25	9.0	--	--	--	--	--	--	--	--	--
2-Methylnaphthalene (2)	10,000.00	1,761.785	170	0.70	--	--	--	--	--	--	--	--	--
4-Chloroaniline	1,117.69	186.921	2.7	0.97	--	--	--	--	--	--	--	--	--
Anthracene	10,000.00	10,000.00	51	51	--	--	--	--	--	--	--	--	--
Benzo[a]anthracene	103.88	103.881	15	5.0	--	--	--	--	--	--	--	--	--
Benzo[a]pyrene	69.85	69.849	1.5	0.50	--	--	--	--	--	--	--	--	--
Benzo[b]fluoranthene	354.98	354.977	15	5.0	--	--	--	--	--	--	--	--	--
Benzo[g,h,i]perylene	NA	NA	(1)	(1)	--	--	--	--	--	--	--	--	--
Benzo[k]fluoranthene	3,759.12	501.638	39	39	--	--	--	--	--	--	--	--	--
Bis(2-ethylhexyl)phthalate	1,406.25	16.427	980	300	--	--	73.000	41.000	--	--	--	--	--
Butyl benzyl phthalate	10,000.00	10,000.00	930	930	--	--	--	--	--	--	--	--	--
Chrysene	10,000.00	379.273	25	25	--	--	--	--	--	--	--	--	--
Di-n-butyl phthalate	6,188.56	1,034.967	2,000	2,000	--	--	--	--	--	--	--	--	--
Di-n-octyl phthalate	10,000.00	2,318.850	(1)	(1)	--	--	19.000	20.000	--	--	--	--	--
Dibenzo[a,h]anthracene	69.86	69.863	1.5	0.50	--	--	--	--	--	--	--	--	--
Diethyl phthalate	10,000.00	10,000.00	1,300	450	--	--	--	--	--	--	--	--	--
Fluoranthene	10,000.00	2,305.040	880	880	--	--	--	--	--	--	--	--	--
Indeno[1,2,3-cd]pyrene	629.17	629.166	3.1	3.1	--	--	--	--	--	--	--	--	--
Naphthalene	10,000.00	1,761.785	170	0.70	--	--	--	--	--	--	--	--	--
Phenanthrene	NA	NA	(1)	(1)	--	--	--	--	--	--	--	--	--
Pyrene	10,000.00	10,000.00	570	570	--	--	--	--	--	--	--	--	--

NOTES: *Data Quality Objectives and Cleanup Goals per Indiana Department of Environmental Management, in the Resource Guide for the Indiana Voluntary Remediation Program (VRP July 1996) and Risk Integrated System of Closure Technical Guide - Appendix 1 (RISC February 15, 2001).*

All values are mg/kg (or parts per million).

1 - Analytic specific cleanup goal not listed in VRP or RISC cleanup goals

2 - Alternate cleanup criteria for Naphthalene was used

3 - Alternate cleanup criteria for Xylenes was used

4 - Exceeds RISC Residential cleanup goal only

5 - Exceeds RISC Industrial and Residential cleanup goals

6 - Exceeds both VRP Residential and RISC Residential cleanup goals

J - Estimated value detected below reporting limits (metals/organics)

NA - Not Applicable

"--" - Data point below reporting values

"x" - Parameter not analyzed

Table 3 / Section 3
J-PIT Redevelopment
Phase II Site Assessment
Subsurface Soil Analytical Results

	VRP Cleanup Goals		RISC Cleanup Goals										
	Subsurface Soil Nonresidential (mg/kg)	Subsurface Soil Residential (mg/kg)	Subsurface Soil Industrial (mg/kg)	Subsurface Soil Residential (mg/kg)	SB-1-01	SB-2-01	SB-3-01	SB-4-01	SB-5-01	SB-6-01	SB-7-01	SB-7-02	SB-8-01
					2-3'	6-7'	3-4'	3-4'	2.5-3.5'	3.5-4'	0-1.5'	5-6.5'	6.5-7.5'
					11/04/02	11/04/02	11/04/02	11/04/02	11/04/02	11/04/02	11/04/02	11/04/02	11/04/02
Volatile Organic Compounds													
1,1,2-Trichloroethane	1.05	0.035	0.30	0.030	--	--	--	--	--	--	--	--	--
2-Butanone	(1)	(1)	260	12	--	--	--	0.042	--	--	--	--	--
2-Hexanone	(1)	(1)	(1)	(1)	--	--	--	--	--	--	--	--	--
Acetone	136.29	22.793	41	3.1	--	--	--	0.220	--	--	--	--	--
Benzene	4.77	0.059	0.67	0.034	--	--	0.0052	0.0081	--	--	--	--	--
Carbon Disulfide	(1)	(1)	82	10	--	--	--	--	--	--	--	--	--
Dibromochloromethane	(1)	(1)	0.63	0.63	--	--	--	--	--	--	--	--	--
Ethylbenzene	1,000.00	834.372	200	13	--	--	0.0086	0.051	--	--	--	--	--
m,p-Xylene (3)	1,000.00	1,000.00	410	190	--	--	0.014	0.088	--	0.0043	0.003	0.0025	--
Methylene chloride	(1)	(1)	1.8	0.023	0.0063	0.0061	0.018	0.017	0.0047	0.0077	0.0094	0.0054	0.0053
o-Xylene (3)	1,000.00	1,000.00	410	190	--	--	--	0.064	--	--	--	--	--
Styrene	(1)	(1)	720	3.5	--	--	0.0089	--	--	--	--	--	--
Tetrachloroethene	8.01	0.227	0.64	0.058	--	--	0.033	--	--	--	--	--	--
Toluene	1,000.00	278.926	240	12	0.0035	0.0064	0.12	0.12	--	0.058	0.027	0.03	0.008
Trichlorofluoromethane	(1)	(1)	(1)	(1)	--	--	0.12	--	--	--	--	--	--
Total Xylenes (3)	1,000.00	1,000.00	410	190	--	--	0.014	0.15	--	0.0043	0.003	--	--
Metals													
Mercury	87.60	87.60	32	2.1	x	x	0.86	x	x	x	--	x	x
Arsenic	438.00	438.00	20	3.9	x	x	**5.7**(4)	x	x	x	1.1	x	x
Barium	10,000.00	10,000.00	5,900	1,600	x	x	580	x	x	x	13	x	x
Cadmium	730.00	730.00	77	7.5	x	x	**14**(4)	x	x	x	0.25	x	x
Chromium	7,3000.00	7300	120	38	x	x	**130**(5)	x	x	x	6.1	x	x
Lead	NA	NA	230	81	x	x	**1400**(5)	x	x	x	7.4	x	x
Selenium	7,300.00	7,300.00	53	5.2	x	x	**8.9**(4)	x	x	x	--	x	x
Silver	7,300.00	7,300.00	87	31	x	x	0.6	x	x	x	--	x	x

NOTES: *Data Quality Objectives and Cleanup Goals per Indiana Department of Environmental Management, in the Resource Guide for the Indiana Voluntary Remediation Program (VRP July 1996) and Risk Integrated System of Closure Technical Guide - Appendix 1 (RISC February 15, 2001).*

All values are mg/kg (or parts per million).

1 - Analytic specific cleanup goal not listed in VRP or RISC cleanup goals

2 - Alternate cleanup criteria for Naphthalene was used

3 - Alternate cleanup criteria for Xylenes was used

4 - Exceeds RISC Residential cleanup goal only

5 - Exceeds RISC Industrial and Residential cleanup goals

6 - Exceeds both VRP Residential and RISC Residential cleanup goals

J - Estimated value detected below reporting limits (metals/organics)

NA - Not Applicable

"--" - Data point below reporting values

"x" - Parameter not analyzed

Table 3 / Section 4
J-PIT Redevelopment
Phase II Site Assessment
Subsurface Soil Analytical Results

	VRP Cleanup Goals		RISC Cleanup Goals						
	Subsurface Soil Nonresidential (mg/kg)	Subsurface Soil Residential (mg/kg)	Subsurface Soil Industrial (mg/kg)	Subsurface Soil Residential (mg/kg)	SB-12-01 3-4' 11/05/02	SB-15-01 10-11' 11/08/02	SB-16-01 6-7' 11/08/02	SB-17-01 14-15' 11/08/02	SB-18-01 3-5' 11/08/02
Semivolatile Organic Compounds									
2,4-Dimethylphenol	(1)	(1)	25	9.0	--	--	--	--	--
2-Methylnaphthalene (2)	10,000.00	1,761.785	170	0.70	--	--	--	--	--
4-Chloroaniline	1,117.69	186.921	2.7	0.97	--	--	--	--	--
Anthracene	10,000.00	10,000.00	51	51	--	--	--	--	--
Benzo[a]anthracene	103.88	103.881	15	5.0	--	--	--	--	--
Benzo[a]pyrene	69.85	69.849	1.5	0.50	--	--	--	--	--
Benzo[b]fluoranthene	354.98	354.977	15	5.0	--	--	--	--	--
Benzo[g,h,i]perylene	NA	NA	(1)	(1)	--	--	--	--	--
Benzo[k]fluoranthene	3,759.12	501.638	39	39	--	--	--	--	--
Bis(2-ethylhexyl)phthalate	1,406.25	16.427	980	300	--	--	--	--	--
Butyl benzyl phthalate	10,000.00	10,000.00	930	930	--	--	--	--	--
Chrysene	10,000.00	379.273	25	25	--	--	--	--	--
Di-n-butyl phthalate	6,188.56	1,034.967	2,000	2,000	--	--	0.060 J	--	--
Di-n-octyl phthalate	10,000.00	2,318.850	(1)	(1)	--	--	--	--	--
Dibenzo[a,h]anthracene	69.86	69.863	1.5	0.50	--	--	--	--	--
Diethyl phthalate	10,000.00	10,000.00	1,300	450	--	--	--	--	--
Fluoranthene	10,000.00	2,305.040	880	880	--	--	--	--	--
Indeno[1,2,3-cd]pyrene	629.17	629.166	3.1	3.1	--	--	--	--	--
Naphthalene	10,000.00	1,761.785	170	0.70	--	--	--	--	--
Phenanthrene	NA	NA	(1)	(1)	--	--	--	--	--
Pyrene	10,000.00	10,000.00	570	570	--	--	--	--	--

NOTES: *Data Quality Objectives and Cleanup Goals per Indiana Department of Environmental Management, in the Resource Guide for the Indiana Voluntary Remediation Program (VRP July 1996) and Risk Integrated System of Closure Technical Guide - Appendix 1 (RISC February 15, 2001).*

All values are mg/kg (or parts per million).

1 - Analytic specific cleanup goal not listed in VRP or RISC cleanup goals

2 - Alternate cleanup criteria for Naphthalene was used

3 - Alternate cleanup criteria for Xylenes was used

4 - Exceeds RISC Residential cleanup goal only

5 - Exceeds RISC Industrial and Residential cleanup goals

6 - Exceeds both VRP Residential and RISC Residential cleanup goals

J - Estimated value detected below reporting limits (metals/organics)

NA - Not Applicable

"--" - Data point below reporting values

"x" - Parameter not analyzed

Table 3 / Section 4
J-PIT Redevelopment
Phase II Site Assessment
Subsurface Soil Analytical Results

	VRP Cleanup Goals		RISC Cleanup Goals						
	Subsurface Soil Nonresidential (mg/kg)	Subsurface Soil Residential (mg/kg)	Subsurface Soil Industrial (mg/kg)	Subsurface Soil Residential (mg/kg)	SB-12-01 3-4' 11/05/02	SB-15-01 10-11' 11/08/02	SB-16-01 6-7' 11/08/02	SB-17-01 14-15' 11/08/02	SB-18-01 3-5' 11/08/02
Volatile Organic Compounds									
1,1,2-Trichloroethane	1.05	0.035	0.30	0.030	--	--	--	--	--
2-Butanone	(1)	(1)	260	12	--	--	--	--	--
2-Hexanone	(1)	(1)	(1)	(1)	--	--	--	--	--
Acetone	136.29	22.793	41	3.1	--	--	--	--	--
Benzene	4.77	0.059	0.67	0.034	--	--	--	--	--
Carbon Disulfide	(1)	(1)	82	10	--	--	--	--	--
Dibromochloromethane	(1)	(1)	0.63	0.63	--	--	--	--	--
Ethylbenzene	1,000.00	834.372	200	13	--	--	--	--	--
m,p-Xylene (3)	1,000.00	1,000.00	410	190	--	--	--	0.0049	0.0027
Methylene chloride	(1)	(1)	1.8	0.023	0.015	0.013 J	0.0085	--	--
o-Xylene (3)	1,000.00	1,000.00	410	190	--	--	--	--	--
Styrene	(1)	(1)	720	3.5	--	--	--	--	--
Tetrachloroethene	8.01	0.227	0.64	0.058	--	--	--	--	--
Toluene	1,000.00	278.926	240	12	0.0038	0.0085 J	--	--	0.0036
Trichlorofluoromethane	(1)	(1)	(1)	(1)	--	--	--	--	--
Total Xylenes (3)	1,000.00	1,000.00	410	190	--	--	--	0.0049	0.0027
Metals									
Mercury	87.60	87.60	32	2.1	x	x	x	x	x
Arsenic	438.00	438.00	20	3.9	x	x	x	x	x
Barium	10,000.00	10,000.00	5,900	1,600	x	x	x	x	x
Cadmium	730.00	730.00	77	7.5	x	x	x	x	x
Chromium	7,3000.00	7300	120	38	x	x	x	x	x
Lead	NA	NA	230	81	x	x	x	x	x
Selenium	7,300.00	7,300.00	53	5.2	x	x	x	x	x
Silver	7,300.00	7,300.00	87	31	x	x	x	x	x

NOTES: *Data Quality Objectives and Cleanup Goals per Indiana Department of Environmental Management, in the Resource Guide for the Indiana Voluntary Remediation Program (VRP July 1996) and Risk Integrated System of Closure Technical Guide - Appendix 1 (RISC February 15, 2001).*

All values are mg/kg (or parts per million).

1 - Analytic specific cleanup goal not listed in VRP or RISC cleanup goals

2 - Alternate cleanup criteria for Naphthalene was used

3 - Alternate cleanup criteria for Xylenes was used

4 - Exceeds RISC Residential cleanup goal only

5 - Exceeds RISC Industrial and Residential cleanup goals

6 - Exceeds both VRP Residential and RISC Residential cleanup goals

J - Estimated value detected below reporting limits (metals/organics)

NA - Not Applicable

"--" - Data point below reporting values

"x" - Parameter not analyzed

Table 3 / Section 5
J-PIT Redevelopment
Phase II Site Assessment
Subsurface Soil Analytical Results

	VRP Cleanup Goals		RISC Cleanup Goals											
	Subsurface Soil Nonresidential (mg/kg)	Subsurface Soil Residential (mg/kg)	Subsurface Soil Industrial (mg/kg)	Subsurface Soil Residential (mg/kg)	SB-13-01	SB-14-01	SB-17-01	SB-19-01	SB-20-01	SB-24-01	SB-25-01	SB-27-01	SB-30-01	SB-30-01D
					19-20'	15-16'	14-15'	19-20'	15-16'	0-2.5'	20-21'	17-18'	14-15'	14-15'
					11/08/02	11/08/02	11/08/02	11/08/02	11/08/02	11/13/02	11/13/02	11/19/02	11/20/02	11/20/02
Semivolatile Organic Compounds														
2,4-Dimethylphenol	(1)	(1)	25	9.0	--	--	--	--	--	--	--	--	--	--
2-Methylnaphthalene (2)	10,000.00	1,761.785	170	0.70	--	--	--	--	--	--	--	--	--	--
4-Chloroaniline	1,117.69	186.921	2.7	0.97	--	--	--	--	--	--	--	--	--	--
Anthracene	10,000.00	10,000.00	51	51	--	--	--	--	--	--	--	--	--	--
Benzo[a]anthracene	103.88	103.881	15	5.0	--	--	--	--	--	--	--	--	--	--
Benzo[a]pyrene	69.85	69.849	1.5	0.50	--	--	--	--	--	--	--	--	--	--
Benzo[b]fluoranthene	354.98	354.977	15	5.0	--	--	--	--	--	--	--	--	--	--
Benzo[g,h,i]perylene	NA	NA	(1)	(1)	--	--	--	--	--	0.057	0.040 J	--	--	--
Benzo[k]fluoranthene	3,759.12	501.638	39	39	--	--	--	--	--	--	--	--	--	--
Bis(2-ethylhexyl)phthalate	1,406.25	16.427	980	300	--	--	--	--	--	0.080	0.050 J	--	--	--
Butyl benzyl phthalate	10,000.00	10,000.00	930	930	--	--	--	--	--	--	--	--	--	--
Chrysene	10,000.00	379.273	25	25	--	--	--	--	--	--	--	--	--	--
Di-n-butyl phthalate	6,188.56	1,034.967	2,000	2,000	--	--	--	--	--	--	--	--	--	--
Di-n-octyl phthalate	10,000.00	2,318.850	(1)	(1)	--	--	--	--	--	--	--	--	--	--
Dibenzo[a,h]anthracene	69.86	69.863	1.5	0.50	--	--	--	--	--	0.060 J	0.050 J	--	--	--
Diethyl phthalate	10,000.00	10,000.00	1,300	450	--	--	--	--	0.040 J	--	--	--	--	--
Fluoranthene	10,000.00	2,305.040	880	880	--	--	--	--	--	--	--	--	--	--
Indeno[1,2,3-cd]pyrene	629.17	629.166	3.1	3.1	--	--	--	--	--	0.060 J	0.050 J	--	--	--
Naphthalene	10,000.00	1,761.785	170	0.70	--	--	--	--	--	--	--	--	--	--
Phenanthrene	NA	NA	(1)	(1)	--	--	--	--	--	--	--	--	--	--
Pyrene	10,000.00	10,000.00	570	570	--	--	--	--	--	--	--	--	--	--

NOTES: *Data Quality Objectives and Cleanup Goals per Indiana Department of Environmental Management, in the Resource Guide for the Indiana Voluntary Remediation Program (VRP July 1996) and Risk Integrated System of Closure Technical Guide - Appendix 1 (RISC February 15, 2001).*

All values are mg/kg (or parts per million).

1 - Analytic specific cleanup goal not listed in VRP or RISC cleanup goals

2 - Alternate cleanup criteria for Naphthalene was used

3 - Alternate cleanup criteria for Xylenes was used

4 - Exceeds RISC Residential cleanup goal only

5 - Exceeds RISC Industrial and Residential cleanup goals

6 - Exceeds both VRP Residential and RISC Residential cleanup goals

J - Estimated value detected below reporting limits (metals/organics)

NA - Not Applicable

"--" - Data point below reporting values

"x" - Parameter not analyzed

Table 3 / Section 5
J-PIT Redevelopment
Phase II Site Assessment
Subsurface Soil Analytical Results

	VRP Cleanup Goals		RISC Cleanup Goals												
	Subsurface Soil Nonresidential (mg/kg)	Subsurface Soil Residential (mg/kg)	Subsurface Soil Industrial (mg/kg)	Subsurface Soil Residential (mg/kg)	SB-13-01	SB-14-01	SB-17-01	SB-19-01	SB-20-01	SB-24-01	SB-25-01	SB-27-01	SB-30-01	SB-30-01D
					19-20'	15-16'	14-15'	19-20'	15-16'	0-2.5'	20-21'	17-18'	14-15'	14-15'
					11/08/02	11/08/02	11/08/02	11/08/02	11/08/02	11/13/02	11/13/02	11/19/02	11/20/02	11/20/02
Volatile Organic Compounds														
1,1,2-Trichloroethane	1.05	0.035	0.30	0.030	--	--	--	--	--	--	--	--	--	--
2-Butanone	(1)	(1)	260	12	--	--	--	--	--	--	--	--	--	--
2-Hexanone	(1)	(1)	(1)	(1)	--	--	--	--	--	--	--	--	--	--
Acetone	136.29	22.793	41	3.1	--	--	--	--	--	--	--	0.010	--	--
Benzene	4.77	0.059	0.67	0.034	--	--	--	--	--	--	--	--	--	--
Carbon Disulfide	(1)	(1)	82	10	--	--	--	--	--	--	--	0.0014	--	--
Dibromochloromethane	(1)	(1)	0.63	0.63	--	--	--	--	--	--	--	--	0.0044	0.0048
Ethylbenzene	1,000.00	834.372	200	13	--	--	--	--	--	--	--	--	--	0.0011
m,p-Xylene (3)	1,000.00	1,000.00	410	190	--	0.0061	0.0049	0.0035	--	--	--	--	0.0028	0.0035
Methylene chloride	(1)	(1)	1.8	0.023	--	0.0051	--	--	--	0.0094	0.011	0.012	0.0070	0.0063
o-Xylene (3)	1,000.00	1,000.00	410	190	--	--	--	--	--	--	--	--	--	--
Styrene	(1)	(1)	720	3.5	--	--	--	--	--	--	--	--	--	--
Tetrachloroethene	8.01	0.227	0.64	0.058	--	--	--	--	--	--	--	--	0.0045	0.0054
Toluene	1,000.00	278.926	240	12	--	--	--	--	--	--	--	--	--	0.0018
Trichlorofluoromethane	(1)	(1)	(1)	(1)	--	--	--	--	--	--	--	--	--	--
Total Xylenes (3)	1,000.00	1,000.00	410	190	--	0.0061	0.0049	0.0035	--	--	--	--	0.0028	0.0035
Metals														
Mercury	87.60	87.60	32	2.1	x	x	x	x	x	x	x	x	x	x
Arsenic	438.00	438.00	20	3.9	x	x	x	x	x	x	x	x	x	x
Barium	10,000.00	10,000.00	5,900	1,600	x	x	x	x	x	x	x	x	x	x
Cadmium	730.00	730.00	77	7.5	x	x	x	x	x	x	x	x	x	x
Chromium	7,3000.00	7300	120	38	x	x	x	x	x	x	x	x	x	x
Lead	NA	NA	230	81	x	x	x	x	x	x	x	x	x	x
Selenium	7,300.00	7,300.00	53	5.2	x	x	x	x	x	x	x	x	x	x
Silver	7,300.00	7,300.00	87	31	x	x	x	x	x	x	x	x	x	x

NOTES: *Data Quality Objectives and Cleanup Goals per Indiana Department of Environmental Management, in the Resource Guide for the Indiana Voluntary Remediation Program (VRP July 1996) and Risk Integrated System of Closure Technical Guide - Appendix 1 (RISC February 15, 2001).*

All values are mg/kg (or parts per million).

1 - Analytic specific cleanup goal not listed in VRP or RISC cleanup goals

2 - Alternate cleanup criteria for Naphthalene was used

3 - Alternate cleanup criteria for Xylenes was used

4 - Exceeds RISC Residential cleanup goal only

5 - Exceeds RISC Industrial and Residential cleanup goals

6 - Exceeds both VRP Residential and RISC Residential cleanup goals

J - Estimated value detected below reporting limits (metals/organics)

NA - Not Applicable

"--" - Data point below reporting values

"x" - Parameter not analyzed

Table 4 / Section 5
J-PIT Redevelopment
Phase II Site Assessment
Sediment Analytical Results

	VRP Cleanup Goals		RISC Cleanup Goals							
	Surface Soil Nonresidential (mg/kg)	Surface Soil Residential (mg/kg)	Surface Soil Industrial (mg/kg)	Surface Soil Residential (mg/kg)	SD-01	SD-02	SD-02D	SD-03	SD-04	SD-05
					11/21/02	11/21/02	11/21/02	11/22/02	11/22/02	11/22/02
Semivolatile Organic Compounds										
Anthracene	10,000.00	10,000.00	51	51	--	--	--	--	0.120	--
Benzo[a]anthracene	79.45	0.88	15	5.0	--	--	--	--	0.750	--
Benzo[a]pyrene	7.94	0.66	1.5	0.50	--	--	--	--	**0.770**[3]	--
Benzo[b]fluoranthene	79.45	0.88	15	5.0	0.110	0.067	0.050 J	--	**1.600**[4]	0.070 J
Benzo[g,h,i]perylene	NA	NA	(1)	(1)	0.072	0.060 J	--	--	0.660	--
Benzo[k]fluoranthene	794.52	8.77	39	39	0.050 J	--	--	--	0.280	--
Chrysene	7,945.21	87.67	25	25	--	--	--	--	0.750	--
Dibenz[a,h]anthracene	7.95	0.66	1.5	0.50	0.060 J	--	--	--	0.200 J	--
Fluoranthene	10,000.00	2,160.00	880	880	--	--	--	--	1.400	--
Ideno[1,2,3-cd]pyrene	79.45	0.88	3.1	3.1	0.080 J	0.050 J	--	--	0.510	--
Phenanthrene	NA	NA	(1)	(1)	--	--	--	--	0.420	--
Pyrene	10,000.00	8,100.00	570	570	--	--	--	--	0.920	--
Volatile Organic Compounds										
Acetone	1,000.00	1,000.00	41	3.1	--	--	--	--	--	0.015
Carbon Disulfide	(1)	(1)	82	10	--	--	--	--	0.0034	0.0026
Dibromochloromethane	(1)	(1)	0.63	0.63	--	--	--	0.0070	--	--
Methylene chloride	(1)	(1)	1.8	0.023	0.0046	0.0065	0.0067	0.0056	**0.029**[2]	0.0061
Tetrachloroethene	101.23	12.55	0.64	0.058	--	--	--	0.010	--	--
Metals										
Arsenic	612.00	81.00	20	3.9	**6.5**[2]	**4.7**[2]	**4.9**[2]	**7.8**[2]	**10**[2]	**5.7**[2]
Barium	10,000.00	10,000.00	5,900	1,600	20	15	11	36	82	27
Cadmium	1,020.00	135.00	77	7.5	1.9	0.89	1.2	2.2	3.2	1.7
Chromium	10,000.00	1,350.00	120	38	**71**[2]	5.2	7.8	15	32	12
Lead	NA	NA	230	81	13	7.3	9.1	12	34	10
Selenium	10,000.00	1,350.00	53	5.2	**5.3**[2]	3.9	4.4	**5.8**[2] J	**15**[2]	**6.2**[2]

NOTES: *Data Quality Objectives and Cleanup Goals per Indiana Department of Environmental Management, in the Resource Guide for the Indiana Voluntary Remediation Program (VRP July 1996) and Risk Integrated System of Closure Technical Guide - Appendix 1 (RISC February 15, 2001).*

All values are mg/kg (or parts per million).

1 - Analytic specific cleanup goal not listed in VRP or RISC cleanup goals

2 - Exceeds RISC Residential cleanup goal only

3 - Exceeds both VRP Residential and RISC Residential cleanup goals

4 - Exceeds VRP Residential cleanup goal only

J - Estimated value detected below reporting limits (metals/organics)

NA - Not Applicable

"--" - Data point below reporting values

"x" - Parameter not analyzed

Table 5 / Section 5
J-PIT Redevelopment
Phase II Site Assessment
Surface Water Analytical Results

	VRP Cleanup Goals		RISC Cleanup Goals							
	Groundwater Nonresidential (mg/L)	Groundwater Residential (mg/L)	Groundwater Industrial (mg/L)	Groundwater Residential (mg/L)	SW-01	SW-02	SW-02D	SW-03	SW-04	SW-05
					11/21/02	11/21/02	11/21/02	11/22/02	11/22/02	11/22/02
Semivolatile Organic Compounds										
Benzo[a]anthracene	0.0100	0.00010	0.0039	0.0012	0.00064	--	--	--	--	--
Fluoranthene	0.8176	0.8176	0.21	0.21	0.0002 J	--	--	--	--	--
Fluorene	4.0880	1.21600	2.0	0.31	0.00086	--	--	--	--	--
Phenanthrene	NA	NA	(1)	(1)	0.00028	--	--	--	--	--
Metals										
Arsenic	0.0500	0.05000	0.050	0.050	**0.12**(4)	0.018	0.011	0.009 J	0.044	0.029
Barium	7.1540	2.00000	7.2	2.0	0.17	0.090	0.13	0.072	0.25	0.19
Cadmium	0.5110	0.00500	0.051	0.0050	**0.0060**(3) J	--	--	--	0.0047	**0.0065**(3)
Chromium	0.31	0.10000	0.31	0.100	0.021	--	--	--	--	0.010
Lead	NA	NA	0.042	0.015	0.007 J	--	--	--	0.0096	**0.035**(2)
Selenium	0.5110	0.05000	0.51	0.050	**0.057**(3)	0.032	0.03 J	--	**0.074**(3)	0.03 J

NOTES: *Data Quality Objectives and Cleanup Goals per Indiana Department of Environmental Management, in the Resource Guide for the Indiana Voluntary Remediation Program (VRP July 1996) and Risk Integrated System of Closure Technical Guide - Appendix 1 (RISC February 15, 2001).*

Groundwater cleanup goals were used rather than Surface Water cleanup goals as the area is part of a groundwater collection system and the samples are representative of groundwater.

All values are mg/L (or parts per million).

1 - Analytic specific cleanup goal not listed in VRP or RISC cleanup goals

2 - Exceeds RISC Residential cleanup goal only

3 - Exceeds both VRP Residential and RISC Residential cleanup goals

4 - Exceeds all cleanup goals

J - Estimated value detected below reporting limits (metals/organics)

NA - Not Applicable

"--" - Data point below reporting values

"x" - Parameter not analyzed

Table 6 / Section 1
J-PIT Redevelopment
Phase II Site Assessment
Groundwater Analytical Results, Round 1

	VRP Cleanup Goals		RISC Cleanup Goals					
	Groundwater Nonresidential (mg/L)	Groundwater Residential (mg/L)	Groundwater Industrial (mg/L)	Groundwater Residential (mg/L)	MW-1-01	MW-2-01	MW-3-01	MW-4-01
					12/06/02	12/06/02	12/06/02	12/06/02
Semivolatile Organic Compounds								
Fluorene	4.0880	1.21600	2.0	0.31	--	--	--	--
Volatile Organic Compounds								
1,1,1-Trichloroethane	9.1980	0.20000	3.6	0.20	--	--	--	--
1,1-Dichloroethane	10.2200	0.64000	10	0.99	--	--	--	--
Chloroethane	NA	23.16075	0.99	0.062	--	--	--	--
Methyl-t-Butyl Ether	(1)	(1)	0.72	0.045	--	--	--	--
Metals								
Mercury	0.0061	0.00200	0.031	0.0020	--	--	0.0001	--
Arsenic	0.0500	0.05000	0.050	0.050	0.028	0.024	**0.15**(5)	0.023
Barium	7.1540	2.00000	7.2	2.0	0.13	0.082	0.23	0.011
Cadmium	0.5110	0.00500	0.051	0.0050	0.0034	0.001 J	0.0029	0.0020
Chromium	0.31	0.10000	0.31	0.100	0.018	0.002 J	0.011	0.038
Lead	NA	NA	0.042	0.015	**0.052**(4)	**0.030**(2)	**0.055**(4)	**0.027**(2)
Selenium	0.5110	0.05000	0.51	0.050	--	--	--	--

NOTES: *Data Quality Objectives and Cleanup Goals per Indiana Department of Environmental Management, in the Resource Guide for the Indiana Voluntary Remediation Program (VRP July 1996) and Risk Integrated System of Closure Technical Guide - Appendix 1 (RISC February 15, 2001).*

All values are mg/L (or parts per million).

1 - Analytic specific cleanup goal not listed in VRP or RISC cleanup goals

2 - Exceeds RISC Residential cleanup goal only

3 - Exceeds both VRP Residential and RISC Residential cleanup goals

4 - Exceeds RISC Industrial and Residential cleanup goals

5 - Exceeds all cleanup goals

J - Estimated value detected below reporting limits (metals/organics)

NA - Not Applicable

"--" - Data point below reporting values

"x" - Parameter not analyzed

Table 6 / Section 2
J-PIT Redevelopment
Phase II Site Assessment
Groundwater Analytical Results, Round 1

	VRP Cleanup Goals		RISC Cleanup Goals						
	Groundwater Nonresidential (mg/L)	Groundwater Residential (mg/L)	Groundwater Industrial (mg/L)	Groundwater Residential (mg/L)	MW-8-01R	MW-8-01D	MW-9-01	MW-13-01	MW-14-01
					12/23/02	12/23/02	12/06/02	12/06/02	12/06/02
Semivolatile Organic Compounds									
Fluorene	4.0880	1.21600	2.0	0.31	0.0005 J	0.0003 J	--	--	--
Volatile Organic Compounds									
1,1,1-Trichloroethane	9.1980	0.20000	3.6	0.20	--	--	--	--	--
1,1-Dichloroethane	10.2200	0.64000	10	0.99	--	--	--	--	--
Chloroethane	NA	23.16075	0.99	0.062	--	--	--	--	--
Methyl-t-Butyl Ether	(1)	(1)	0.72	0.045	--	--	0.033	--	--
Metals									
Mercury	0.0061	0.00200	0.031	0.0020	--	--	--	0.0001 J	--
Arsenic	0.0500	0.05000	0.050	0.050	**0.052**(5)	**0.050**(5)	0.032	0.020	0.013
Barium	7.1540	2.00000	7.2	2.0	0.12	0.11	0.19	0.13	0.10
Cadmium	0.5110	0.00500	0.051	0.0050	**0.011**(3)	**0.010**(3)	0.0023	0.0032	0.001 J
Chromium	0.31	0.10000	0.31	0.100	0.019	0.015	0.0044	0.024	0.0084
Lead	NA	NA	0.042	0.015	**0.039**(2)	**0.031**(2)	**0.031**(2)	**0.080**(4)	**0.026**(2)
Selenium	0.5110	0.05000	0.51	0.050	--	--	--	--	--

NOTES: *Data Quality Objectives and Cleanup Goals per Indiana Department of Environmental Management, in the Resource Guide for the Indiana Voluntary Remediation Program (VRP July 1996) and Risk Integrated System of Closure Technical Guide - Appendix 1 (RISC February 15, 2001).*

All values are mg/L (or parts per million).

1 - Analytic specific cleanup goal not listed in VRP or RISC cleanup goals

2 - Exceeds RISC Residential cleanup goal only

3 - Exceeds both VRP Residential and RISC Residential cleanup goals

4 - Exceeds RISC Industrial and Residential cleanup goals

5 - Exceeds all cleanup goals

J - Estimated value detected below reporting limits (metals/organics)

NA - Not Applicable

"--" - Data point below reporting values

"x" - Parameter not analyzed

Table 6 / Section 3
J-PIT Redevelopment
Phase II Site Assessment
Groundwater Analytical Results, Round 1

	VRP Cleanup Goals		RISC Cleanup Goals						
	Groundwater Nonresidential (mg/L)	Groundwater Residential (mg/L)	Groundwater Industrial (mg/L)	Groundwater Residential (mg/L)	MW-5-01	MW-6-01	MW-7-01	MW-7D-01	MW-16-01
					12/06/02	12/06/02	12/11/02	12/11/02	12/06/02
Semivolatile Organic Compounds									
Fluorene	4.0880	1.21600	2.0	0.31	--	0.0004 J	--	--	--
Volatile Organic Compounds									
1,1,1-Trichloroethane	9.1980	0.20000	3.6	0.20	--	--	--	--	0.011
1,1-Dichloroethane	10.2200	0.64000	10	0.99	--	--	--	--	0.019
Chloroethane	NA	23.16075	0.99	0.062	--	--	--	--	0.027
Methyl-t-Butyl Ether	(1)	(1)	0.72	0.045	--	**0.059**(2)	--	--	--
Metals									
Mercury	0.0061	0.00200	0.031	0.0020	0.00025	--	--	0.00035	--
Arsenic	0.0500	0.05000	0.050	0.050	**0.10**(5)	0.028	0.026	0.030	0.043
Barium	7.1540	2.00000	7.2	2.0	0.091	0.17	0.13	0.15	0.14
Cadmium	0.5110	0.00500	0.051	0.0050	0.0040	0.0029	**0.0064**(3)	**0.0079**(3)	0.002 J
Chromium	0.31	0.10000	0.31	0.100	0.015	0.018	0.028	0.042	0.021
Lead	NA	NA	0.042	0.015	**0.11**(4)	**0.11**(4)	**0.050**(4)	**0.060**(4)	**0.058**(4)
Selenium	0.5110	0.05000	0.51	0.050	--	--	--	--	--

NOTES: *Data Quality Objectives and Cleanup Goals per Indiana Department of Environmental Management, in the Resource Guide for the Indiana Voluntary Remediation Program (VRP July 1996) and Risk Integrated System of Closure Technical Guide - Appendix 1 (RISC February 15, 2001).*

All values are mg/L (or parts per million).

1 - Analytic specific cleanup goal not listed in VRP or RISC cleanup goals

2 - Exceeds RISC Residential cleanup goal only

3 - Exceeds both VRP Residential and RISC Residential cleanup goals

4 - Exceeds RISC Industrial and Residential cleanup goals

5 - Exceeds all cleanup goals

J - Estimated value detected below reporting limits (metals/organics)

NA - Not Applicable

"--" - Data point below reporting values

"x" - Parameter not analyzed

Table 6 / Section 4
J-PIT Redevelopment
Phase II Site Assessment
Groundwater Analytical Results, Round 1

	VRP Cleanup Goals		RISC Cleanup Goals				
	Groundwater Nonresidential (mg/L)	Groundwater Residential (mg/L)	Groundwater Industrial (mg/L)	Groundwater Residential (mg/L)	MW-11-01	MW-12-01	MW-12D-01
					12/11/02	12/11/02	12/11/02
Semivolatile Organic Compounds							
Fluorene	4.0880	1.21600	2.0	0.31	--	--	x
Volatile Organic Compounds							
1,1,1-Trichloroethane	9.1980	0.20000	3.6	0.20	--	--	--
1,1-Dichloroethane	10.2200	0.64000	10	0.99	--	--	--
Chloroethane	NA	23.16075	0.99	0.062	--	--	--
Methyl-t-Butyl Ether	(1)	(1)	0.72	0.045	--	--	--
Metals							
Mercury	0.0061	0.00200	0.031	0.0020	--	--	--
Arsenic	0.0500	0.05000	0.050	0.050	0.032	0.029	0.036
Barium	7.1540	2.00000	7.2	2.0	0.23	0.17	0.18
Cadmium	0.5110	0.00500	0.051	0.0050	**0.0085**(3)	**0.0068**(3)	**0.0075**(3)
Chromium	0.31	0.10000	0.31	0.100	0.014	0.0075	0.011
Lead	NA	NA	0.042	0.015	**0.043**(4)	**0.034**(2)	**0.039**(2)
Selenium	0.5110	0.05000	0.51	0.050	--	0.036	0.037

NOTES: *Data Quality Objectives and Cleanup Goals per Indiana Department of Environmental Management, in the Resource Guide for the Indiana Voluntary Remediation Program (VRP July 1996) and Risk Integrated System of Closure Technical Guide - Appendix 1 (RISC February 15, 2001).*

All values are mg/L (or parts per million).

1 - Analytic specific cleanup goal not listed in VRP or RISC cleanup goals

2 - Exceeds RISC Residential cleanup goal only

3 - Exceeds both VRP Residential and RISC Residential cleanup goals

4 - Exceeds RISC Industrial and Residential cleanup goals

5 - Exceeds all cleanup goals

J - Estimated value detected below reporting limits (metals/organics)

NA - Not Applicable

"--" - Data point below reporting values

"x" - Parameter not analyzed

Table 6 / Section 5
J-PIT Redevelopment
Phase II Site Assessment
Groundwater Analytical Results, Round 1

	VRP Cleanup Goals		RISC Cleanup Goals								
	Groundwater Nonresidential (mg/L)	Groundwater Residential (mg/L)	Groundwater Industrial (mg/L)	Groundwater Residential (mg/L)	MW-1-01	MW-2-01	MW-9-01	MW-10-01	MW-12-01	MW-12D-01	MW-15-01
					12/06/02	12/06/02	12/06/02	12/11/02	12/11/02	12/11/02	12/11/02
Semivolatile Organic Compounds											
Fluorene	4.0880	1.21600	2.0	0.31	--	--	--	--	--	x	--
Volatile Organic Compounds											
1,1,1-Trichloroethane	9.1980	0.20000	3.6	0.20	--	--	--	--	--	--	--
1,1-Dichloroethane	10.2200	0.64000	10	0.99	--	--	--	--	--	--	--
Chloroethane	NA	23.16075	0.99	0.062	--	--	--	--	--	--	--
Methyl-t-Butyl Ether	(1)	(1)	0.72	0.045	--	--	0.033	--	--	--	--
Metals											
Mercury	0.0061	0.00200	0.031	0.0020	--	--	--	--	--	--	--
Arsenic	0.0500	0.05000	0.050	0.050	0.028	0.024	0.032	0.014	0.029	0.036	0.038
Barium	7.1540	2.00000	7.2	2.0	0.13	0.082	0.19	0.040	0.17	0.18	0.095
Cadmium	0.5110	0.00500	0.051	0.0050	0.0034	0.001 J	0.0023	0.0041 J	**0.0068**(3)	**0.0075**(3)	**0.0080**(3)
Chromium	0.31	0.10000	0.31	0.100	0.018	0.002 J	0.0044	--	0.0075	0.011	0.025
Lead	NA	NA	0.042	0.015	**0.052**(4)	**0.030**(2)	**0.031**(2)	**0.016**(2)	**0.034**(2)	**0.039**(2)	**0.046**(4)
Selenium	0.5110	0.05000	0.51	0.050	--	--	--	--	0.036	0.037	0.043

NOTES: *Data Quality Objectives and Cleanup Goals per Indiana Department of Environmental Management, in the Resource Guide for the Indiana Voluntary Remediation Program (VRP July 1996) and Risk Integrated System of Closure Technical Guide - Appendix 1 (RISC February 15, 2001).*

All values are mg/L (or parts per million).

1 - Analytic specific cleanup goal not listed in VRP or RISC cleanup goals

2 - Exceeds RISC Residential cleanup goal only

3 - Exceeds both VRP Residential and RISC Residential cleanup goals

4 - Exceeds RISC Industrial and Residential cleanup goals

5 - Exceeds all cleanup goals

J - Estimated value detected below reporting limits (metals/organics)

NA - Not Applicable

"--" - Data point below reporting values

"x" - Parameter not analyzed

Table 7 / Section 1
J-PIT Redevelopment
Phase II Site Assessment
Groundwater Analytical Results, Round 2

	VRP Cleanup Goals		RISC Cleanup Goals					
	Groundwater Nonresidential (mg/L)	Groundwater Residential (mg/L)	Groundwater Industrial (mg/L)	Groundwater Residential (mg/L)	MW-1-02	MW-2-02	MW-3-02	MW-4-02
					07/28/03	07/28/03	07/28/03	07/28/03
Volatile Organic Compounds								
1,1,1-Trichloroethane	9.1980	0.20000	3.6	0.20	--	--	--	--
1,1-Dichloroethane	10.2200	0.64000	10	0.99	--	--	--	--
Methyl-t-Butyl Ether	(1)	(1)	0.72	0.045	--	--	--	--
Methylene Choride	(1)	(1)	0.38	0.0050	--	--	--	--
Metals								
Mercury	0.0061	0.00200	0.031	0.0020	--	--	--	--
Arsenic	0.0500	0.05000	0.050	0.050	0.038	0.015	0.017	0.014
Barium	7.1540	2.00000	7.2	2.0	0.080	0.063	0.13	0.11
Cadmium	0.5110	0.00500	0.051	0.0050	0.0020	---	---	---
Chromium	0.31	0.10000	0.31	0.100	0.0079	0.0083	---	0.0098
Lead	NA	NA	0.042	0.015	**0.022**(2)	0.010	0.013	0.0099
Selenium	0.5110	0.05000	0.51	0.050	0.030	--	--	--

NOTES: *Data Quality Objectives and Cleanup Goals per Indiana Department of Environmental Management, in the Resource Guide for the Indiana Voluntary Remediation Program (VRP July 1996) and Risk Integrated System of Closure Technical Guide - Appendix 1 (RISC February 15, 2001).*

All values are mg/L (or parts per million).

All samples were tested and found below reporting limits for semi-volatile organic compounds.

1 - Analytic specific cleanup goal not listed in VRP or RISC cleanup goals

2 - Exceeds RISC Residential cleanup goal only

3 - Exceeds RISC Industrial and Residential cleanup goals

4 - Exceeds all cleanup goals

J - Estimated value detected below reporting limits (metals/organics)

NA - Not Applicable

"--" - Data point below reporting values

"x" - Parameter not analyzed

Table 7 / Section 2
J-PIT Redevelopment
Phase II Site Assessment
Groundwater Analytical Results, Round 2

	VRP Cleanup Goals		RISC Cleanup Goals					
	Groundwater Nonresidential (mg/L)	Groundwater Residential (mg/L)	Groundwater Industrial (mg/L)	Groundwater Residential (mg/L)	MW-08-02	MW-09-02	MW-13-02	MW-14-02
					07/29/03	07/29/03	07/29/03	07/29/03
Volatile Organic Compounds								
1,1,1-Trichloroethane	9.1980	0.20000	3.6	0.20	--	--	--	--
1,1-Dichloroethane	10.2200	0.64000	10	0.99	--	--	--	--
Methyl-t-Butyl Ether	(1)	(1)	0.72	0.045	--	0.013	--	--
Methylene Choride	(1)	(1)	0.38	0.0050	--	--	--	--
Metals								
Mercury	0.0061	0.00200	0.031	0.0020	0.00029	0.00024	--	--
Arsenic	0.0500	0.05000	0.050	0.050	0.016	**0.066**(4)	--	--
Barium	7.1540	2.00000	7.2	2.0	0.094	0.23	0.13	0.10
Cadmium	0.5110	0.00500	0.051	0.0050	0.0040	0.0046	--	--
Chromium	0.31	0.10000	0.31	0.100	--	--	--	--
Lead	NA	NA	0.042	0.015	**0.12**(3)	**0.078**(3)	**0.024**(2)	**0.037**(2)
Selenium	0.5110	0.05000	0.51	0.050	--	--	--	--

NOTES: *Data Quality Objectives and Cleanup Goals per Indiana Department of Environmental Management, in the Resource Guide for the Indiana Voluntary Remediation Program (VRP July 1996) and Risk Integrated System of Closure Technical Guide - Appendix 1 (RISC February 15, 2001).*

All values are mg/L (or parts per million).

All samples were tested and found below reporting limits for semi-volatile organic compounds.

1 - Analytic specific cleanup goal not listed in VRP or RISC cleanup goals

2 - Exceeds RISC Residential cleanup goal only

3 - Exceeds RISC Industrial and Residential cleanup goals

4 - Exceeds all cleanup goals

J - Estimated value detected below reporting limits (metals/organics)

NA - Not Applicable

"--" - Data point below reporting values

"x" - Parameter not analyzed

Table 7 / Section 3
J-PIT Redevelopment
Phase II Site Assessment
Groundwater Analytical Results, Round 2

	VRP Cleanup Goals		RISC Cleanup Goals								
	Groundwater Nonresidential (mg/L)	Groundwater Residential (mg/L)	Groundwater Industrial (mg/L)	Groundwater Residential (mg/L)	MW-5-02	MW-5-02D	MW-6-02	MW-6-02D	MW-7-02	MW-16-02	MW-17-02
					07/28/03	07/28/03	07/30/03	07/30/03	07/30/03	07/30/03	07/30/03
Volatile Organic Compounds											
1,1,1-Trichloroethane	9.1980	0.20000	3.6	0.20	--	--	--	--	--	0.0090	--
1,1-Dichloroethane	10.2200	0.64000	10	0.99	--	--	--	--	--	0.010	--
Methyl-t-Butyl Ether	(1)	(1)	0.72	0.045	--	--	**0.048**(2)	**0.047**(2)	--	--	--
Methylene Choride	(1)	(1)	0.38	0.0050	--	--	--	--	--	--	--
Metals											
Mercury	0.0061	0.00200	0.031	0.0020		--	--	--	--	--	0.00039
Arsenic	0.0500	0.05000	0.050	0.050	**0.084**(4)	**0.094**(4)	0.016	0.021	--	**0.062**(4)	**0.061**(4)
Barium	7.1540	2.00000	7.2	2.0	0.064	0.063	0.060	0.053	0.069	0.085	0.086
Cadmium	0.5110	0.00500	0.051	0.0050	0.0024	0.0024	--	--	--	--	0.0025
Chromium	0.31	0.10000	0.31	0.100	0.0045	0.033	--	--	0.016	--	--
Lead	NA	NA	0.042	0.015	**0.019**(2)	**0.020**(2)	**0.031**(2)	**0.028**(2)	--	**0.021**(2)	**0.18**(3)
Selenium	0.5110	0.05000	0.51	0.050	--	--	--	--	--	--	--

NOTES: *Data Quality Objectives and Cleanup Goals per Indiana Department of Environmental Management, in the Resource Guide for the Indiana Voluntary Remediation Program (VRP July 1996) and Risk Integrated System of Closure Technical Guide - Appendix 1 (RISC February 15, 2001).*

All values are mg/L (or parts per million).

All samples were tested and found below reporting limits for semi-volatile organic compounds.

1 - Analytic specific cleanup goal not listed in VRP or RISC cleanup goals

2 - Exceeds RISC Residential cleanup goal only

3 - Exceeds RISC Industrial and Residential cleanup goals

4 - Exceeds all cleanup goals

J - Estimated value detected below reporting limits (metals/organics)

NA - Not Applicable

"--" - Data point below reporting values

"x" - Parameter not analyzed

Table 7 / Section 4
J-PIT Redevelopment
Phase II Site Assessment
Groundwater Analytical Results, Round 2

	VRP Cleanup Goals		RISC Cleanup Goals			
	Groundwater Nonresidential (mg/L)	Groundwater Residential (mg/L)	Groundwater Industrial (mg/L)	Groundwater Residential (mg/L)	MW-11-02	MW-12-02
					07/29/03	07/29/03
Volatile Organic Compounds						
1,1,1-Trichloroethane	9.1980	0.20000	3.6	0.20	--	--
1,1-Dichloroethane	10.2200	0.64000	10	0.99	--	--
Methyl-t-Butyl Ether	(1)	(1)	0.72	0.045	--	--
Methylene Choride	(1)	(1)	0.38	0.0050	--	**0.014**(2)
Metals						
Mercury	0.0061	0.00200	0.031	0.0020	--	--
Arsenic	0.0500	0.05000	0.050	0.050	0.011	0.022
Barium	7.1540	2.00000	7.2	2.0	0.15	0.19
Cadmium	0.5110	0.00500	0.051	0.0050	--	0.0028
Chromium	0.31	0.10000	0.31	0.100	--	--
Lead	NA	NA	0.042	0.015	**0.016**(2)	**0.055**(3)
Selenium	0.5110	0.05000	0.51	0.050	--	--

NOTES: *Data Quality Objectives and Cleanup Goals per Indiana Department of Environmental Management, in the Resource Guide for the Indiana Voluntary Remediation Program (VRP July 1996) and Risk Integrated System of Closure Technical Guide - Appendix 1 (RISC February 15, 2001).*

All values are mg/L (or parts per million).

All samples were tested and found below reporting limits for semi-volatile organic compounds.

1 - Analytic specific cleanup goal not listed in VRP or RISC cleanup goals

2 - Exceeds RISC Residential cleanup goal only

3 - Exceeds RISC Industrial and Residential cleanup goals

4 - Exceeds all cleanup goals

J - Estimated value detected below reporting limits (metals/organics)

NA - Not Applicable

"--" - Data point below reporting values

"x" - Parameter not analyzed

Table 7 / Section 5
J-PIT Redevelopment
Phase II Site Assessment
Groundwater Analytical Results, Round 2

	VRP Cleanup Goals		RISC Cleanup Goals						
	Groundwater Nonresidential (mg/L)	Groundwater Residential (mg/L)	Groundwater Industrial (mg/L)	Groundwater Residential (mg/L)	MW-1-02	MW-09-02	MW-10-02	MW-12-02	MW-15-02
					07/28/03	07/29/03	07/29/03	07/29/03	07/29/03
Volatile Organic Compounds									
1,1,1-Trichloroethane	9.1980	0.20000	3.6	0.20	--	--	--	--	--
1,1-Dichloroethane	10.2200	0.64000	10	0.99	--	--	--	--	--
Methyl-t-Butyl Ether	(1)	(1)	0.72	0.045	--	0.013	--	--	--
Methylene Choride	(1)	(1)	0.38	0.0050	--	--	--	**0.014**(2)	--
Metals									
Mercury	0.0061	0.00200	0.031	0.0020	--	0.00024	--	--	--
Arsenic	0.0500	0.05000	0.050	0.050	0.038	**0.066**(4)	--	0.022	--
Barium	7.1540	2.00000	7.2	2.0	0.080	0.23	0.049	0.19	0.062
Cadmium	0.5110	0.00500	0.051	0.0050	0.0020	0.0046	--	0.0028	--
Chromium	0.31	0.10000	0.31	0.100	0.0079	--	--	--	--
Lead	NA	NA	0.042	0.015	**0.022**(2)	**0.078**(3)	**0.024**(2)	**0.055**(3)	0.013
Selenium	0.5110	0.05000	0.51	0.050	0.030	--	--	--	--

NOTES: *Data Quality Objectives and Cleanup Goals per Indiana Department of Environmental Management, in the Resource Guide for the Indiana Voluntary Remediation Program (VRP July 1996) and Risk Integrated System of Closure Technical Guide - Appendix 1 (RISC February 15, 2001).*

All values are mg/L (or parts per million).

All samples were tested and found below reporting limits for semi-volatile organic compounds.

1 - Analytic specific cleanup goal not listed in VRP or RISC cleanup goals

2 - Exceeds RISC Residential cleanup goal only

3 - Exceeds RISC Industrial and Residential cleanup goals

4 - Exceeds all cleanup goals

J - Estimated value detected below reporting limits (metals/organics)

NA - Not Applicable

"--" - Data point below reporting values

"x" - Parameter not analyzed

Table 8a
J-PIT Redevelopment
Phase II Site Assessment
Paul's Auto Yard Lead/RCRA Metal Results

	VRP Cleanup Goals		RISC Cleanup Goals		Sec. 3	Sec. 3	Sec. 3	Sec. 3	Sec. 3	Sec. 3	Sec. 3	Sec. 3	Sec. 3
	Surface Soil Nonresidential (mg/kg)	Surface Soil Residential (mg/kg)	Surface Soil Industrial (mg/kg)	Surface Soil Residential (mg/kg)	LS-01A	LS-02A	LS-03 A	LS-04A	LS-05A	LS-06A	LS-07A	LS-08A	LS-09A
					07/23/03	07/23/03	07/23/03	07/24/03	07/24/03	07/24/03	07/24/03	07/23/03	07/23/03
Metals													
Mercury	122.40	16.20	32	2.1	x	x	x	x	x	x	x	x	x
Arsenic	612.00	81.00	20	3.9	x	x	x	x	x	x	x	x	x
Barium	10,000.00	10,000.00	5,900	1,600	x	x	x	x	x	x	x	x	x
Cadmium	1,020.00	135.00	77	7.5	x	x	x	x	x	x	x	x	x
Chromium	10,000.00	1,350.00	120	38	x	x	x	x	x	x	x	x	x
Lead	NA	NA	230	81	300(3)	190(2)	110(2)	92(2)	100(2)	1,100(3)	170(2)	23	510(3)
Selenium	10,000.00	1,350.00	53	5.2	x	x	x	x	x	x	x	x	x
Silver	10,000.00	1,350.00	87	31	x	x	x	x	x	x	x	x	x

	VRP Cleanup Goals		RISC Cleanup Goals		Sec. 3	Sec. 3	Sec. 3	Sec. 3	Sec. 3	Sec. 3	Sec. 3	Sec. 3	Sec. 3
	Surface Soil Nonresidential (mg/kg)	Surface Soil Residential (mg/kg)	Surface Soil Industrial (mg/kg)	Surface Soil Residential (mg/kg)	LS-10A	LS-11A	LS-11AD	LS-12A	LS-13A	LS-14A	LS-15A	LS-16A	LS-17A
					07/23/03	07/23/03	07/23/03	07/23/03	07/23/03	07/23/03	07/23/03	07/23/03	07/24/03
Metals													
Mercury	122.40	16.20	32	2.1	2.0	x	x	2.4(2)	x	x	x	x	x
Arsenic	612.00	81.00	20	3.9	4.8(2)	x	x	10(2)	x	x	x	x	x
Barium	10,000.00	10,000.00	5,900	1,600	540	x	x	470	x	x	x	x	x
Cadmium	1,020.00	135.00	77	7.5	17(2)	x	x	20(2)	x	x	x	x	x
Chromium	10,000.00	1,350.00	120	38	170(3)	x	x	220(3)	x	x	x	x	x
Lead	NA	NA	230	81	900(3)	150(2)	210(2)	1,100(3)	900(3)	87(2)	1,300(3)	37	350(2)
Selenium	10,000.00	1,350.00	53	5.2	--	x	x	--	x	x	x	x	x
Silver	10,000.00	1,350.00	87	31	1.1	x	x	1.1	x	x	x	x	x

NOTES: *Data Quality Objectives and Cleanup Goals per Indiana Department of Environmental Management, in the Resource Guide for the Indiana Voluntary Remediation Program (VRP July 1996) and Risk Integrated System of Closure Technical Guide - Appendix 1 (RISC February 15, 2001).*

All values are mg/kg (or parts per million).

1 - Analytic specific cleanup goal not listed in VRP or RISC cleanup goals

2 - Exceeds RISC Residential cleanup goal only

3 - Exceeds RISC Industrial and Residential cleanup goals

J - Estimated value detected below reporting limits (metals/organics)

NA - Not Applicable

"--" - Data point below reporting values

"x" - Parameter not analyzed

Table 8a
J-PIT Redevelopment
Phase II Site Assessment
Paul's Auto Yard Lead/RCRA Metal Results

	VRP Cleanup Goals		RISC Cleanup Goals		Sec. 3	Sec. 3	Sec. 3	Sec. 3	Sec. 3	Sec. 3	Sec. 3	Sec. 3	Sec. 3
	Surface Soil Nonresidential (mg/kg)	Surface Soil Residential (mg/kg)	Surface Soil Industrial (mg/kg)	Surface Soil Residential (mg/kg)	LS-18A	LS-19A	LS-20A	LS-21A	LS-22A	LS-22AD	LS-23A	LS-24A	LS-25A
					07/23/03	07/25/03	07/23/03	07/23/03	07/23/03	07/23/03	07/23/03	07/23/03	07/24/03
Metals													
Mercury	122.40	16.20	32	2.1	x	x	x	x	x	x	x	x	x
Arsenic	612.00	81.00	20	3.9	x	x	x	x	x	x	x	x	x
Barium	10,000.00	10,000.00	5,900	1,600	x	x	x	x	x	x	x	x	x
Cadmium	1,020.00	135.00	77	7.5	x	x	x	x	x	x	x	x	x
Chromium	10,000.00	1,350.00	120	38	x	x	x	x	x	x	x	x	x
Lead	NA	NA	230	81	**2,600**(3)	**630**(3)	**1,700**(3)	26	2.3	2.9	40	10	**160**(2)
Selenium	10,000.00	1,350.00	53	5.2	x	x	x	x	x	x	x	x	x
Silver	10,000.00	1,350.00	87	31	x	x	x	x	x	x	x	x	x

	VRP Cleanup Goals		RISC Cleanup Goals		Sec. 2	Sec. 2	Sec. 2	Sec. 2	Sec. 2	Sec. 2	Sec. 2	Sec. 2	Sec. 2
	Surface Soil Nonresidential (mg/kg)	Surface Soil Residential (mg/kg)	Surface Soil Industrial (mg/kg)	Surface Soil Residential (mg/kg)	LS-26A	LS-27A	LS-28A	LS-28AD	LS-29A	LS-30A	LS-31A	LS-32A	LS-33A
					07/24/03	07/24/03	07/24/03	07/24/03	07/24/03	07/24/03	07/31/03	07/31/03	07/31/03
Metals													
Mercury	122.40	16.20	32	2.1	x	x	x	x	x	x	x	x	x
Arsenic	612.00	81.00	20	3.9	x	x	x	x	x	x	x	x	x
Barium	10,000.00	10,000.00	5,900	1,600	x	x	x	x	x	x	x	x	x
Cadmium	1,020.00	135.00	77	7.5	x	x	x	x	x	x	x	x	x
Chromium	10,000.00	1,350.00	120	38	x	x	x	x	x	x	x	x	x
Lead	NA	NA	230	81	**710**(3)	**180**(2)	**1,100**(3)	**320**(3)	**1,200**(3)	**500**(3)	**980**(3)	**380**(3)	**3,800**(3)
Selenium	10,000.00	1,350.00	53	5.2	x	x	x	x	x	x	x	x	x
Silver	10,000.00	1,350.00	87	31	x	x	x	x	x	x	x	x	x

NOTES: *Data Quality Objectives and Cleanup Goals per Indiana Department of Environmental Management, in the Resource Guide for the Indiana Voluntary Remediation Program (VRP July 1996) and Risk Integrated System of Closure Technical Guide - Appendix 1 (RISC February 15, 2001).*

All values are mg/kg (or parts per million).

1 - Analytic specific cleanup goal not listed in VRP or RISC cleanup goals

2 - Exceeds RISC Residential cleanup goal only

3 - Exceeds RISC Industrial and Residential cleanup goals

J - Estimated value detected below reporting limits (metals/organics)

NA - Not Applicable

"--" - Data point below reporting values

"x" - Parameter not analyzed

Table 8a
J-PIT Redevelopment
Phase II Site Assessment
Paul's Auto Yard Lead/RCRA Metal Results

	VRP Cleanup Goals		RISC Cleanup Goals		Sec. 2	Sec. 2	Sec. 2	Sec. 2	Sec. 3	Sec. 3	Sec. 3	Sec. 3	Sec. 3
	Surface Soil Nonresidential (mg/kg)	Surface Soil Residential (mg/kg)	Surface Soil Industrial (mg/kg)	Surface Soil Residential (mg/kg)	LS-34A	LS-35 A	LS-36A	LS-37A	LS-38A	LS-38AD	LS-39A	LS-40A	LS-41A
					07/31/03	08/05/03	07/31/03	07/31/03	07/31/03	07/31/03	07/31/03	07/31/03	07/31/03
Metals													
Mercury	122.40	16.20	32	2.1	x	x	x	x	x	x	x	x	x
Arsenic	612.00	81.00	20	3.9	x	x	x	x	x	x	x	x	x
Barium	10,000.00	10,000.00	5,900	1,600	x	x	x	x	x	x	x	x	x
Cadmium	1,020.00	135.00	77	7.5	x	x	x	x	x	x	x	x	x
Chromium	10,000.00	1,350.00	120	38	x	x	x	x	x	x	x	x	x
Lead	NA	NA	230	81	**200**(2)	2.5	17	**1,200**(3)	3.3	2.9	**300**(3)	**660**(3)	**380**(3)
Selenium	10,000.00	1,350.00	53	5.2	x	x	x	x	x	x	x	x	x
Silver	10,000.00	1,350.00	87	31	x	x	x	x	x	x	x	x	x

	VRP Cleanup Goals		RISC Cleanup Goals		Sec. 3	Sec. 3	Sec. 3	Sec. 3	Sec. 3	Sec. 3	Sec. 3	Sec. 3	Sec. 3
	Surface Soil Nonresidential (mg/kg)	Surface Soil Residential (mg/kg)	Surface Soil Industrial (mg/kg)	Surface Soil Residential (mg/kg)	LS-42A	LS-43A	LS-44A	LS-46A	LS-47A	LS-48A	LS-48AD	LS-49A	LS-50A
					07/31/03	07/31/03	07/31/03	07/31/03	08/01/03	08/01/03	08/01/03	08/01/03	08/01/03
Metals													
Mercury	122.40	16.20	32	2.1	x	x	x	x	x	x	x	x	x
Arsenic	612.00	81.00	20	3.9	x	x	x	x	x	x	x	x	x
Barium	10,000.00	10,000.00	5,900	1,600	x	x	x	x	x	x	x	x	x
Cadmium	1,020.00	135.00	77	7.5	x	x	x	x	x	x	x	x	x
Chromium	10,000.00	1,350.00	120	38	x	x	x	x	x	x	x	x	x
Lead	NA	NA	230	81	**810**(3)	**100**(2)	**480**(3)	**390**(3)	**110**(2)	12	**200**(2)	**830**(3)	**170**(2)
Selenium	10,000.00	1,350.00	53	5.2	x	x	x	x	x	x	x	x	x
Silver	10,000.00	1,350.00	87	31	x	x	x	x	x	x	x	x	x

NOTES: *Data Quality Objectives and Cleanup Goals per Indiana Department of Environmental Management, in the Resource Guide for the Indiana Voluntary Remediation Program (VRP July 1996) and Risk Integrated System of Closure Technical Guide - Appendix 1 (RISC February 15, 2001).*

All values are mg/kg (or parts per million).

1 - Analytic specific cleanup goal not listed in VRP or RISC cleanup goals

2 - Exceeds RISC Residential cleanup goal only

3 - Exceeds RISC Industrial and Residential cleanup goals

J - Estimated value detected below reporting limits (metals/organics)

NA - Not Applicable

"--" - Data point below reporting values

"x" - Parameter not analyzed

Table 8a
J-PIT Redevelopment
Phase II Site Assessment
Paul's Auto Yard Lead/RCRA Metal Results

	VRP Cleanup Goals		RISC Cleanup Goals		Sec. 3	Sec. 3	Sec. 3	Sec. 3	Sec. 3	Sec. 3	Sec. 3	Sec. 3
	Surface Soil Nonresidential (mg/kg)	Surface Soil Residential (mg/kg)	Surface Soil Industrial (mg/kg)	Surface Soil Residential (mg/kg)	LS-51A	LS-52A	LS-53A	LS-54A	LS-54AD	LS-55A	LS-56A	LS-57A
					08/01/03	08/01/03	08/01/03	08/01/03	08/01/03	08/01/03	08/01/03	08/01/03
Metals												
Mercury	122.40	16.20	32	2.1	x	x	x	x	x	x	x	x
Arsenic	612.00	81.00	20	3.9	x	x	x	x	x	x	x	x
Barium	10,000.00	10,000.00	5,900	1,600	x	x	x	x	x	x	x	x
Cadmium	1,020.00	135.00	77	7.5	x	x	x	x	x	x	x	x
Chromium	10,000.00	1,350.00	120	38	x	x	x	x	x	x	x	x
Lead	NA	NA	230	81	240(3) J	82(2)	130(2)	330(3)	130(2)	600(3) J	430(3)	170(2)
Selenium	10,000.00	1,350.00	53	5.2	x	x	x	x	x	x	x	x
Silver	10,000.00	1,350.00	87	31	x	x	x	x	x	x	x	x

	VRP Cleanup Goals		RISC Cleanup Goals		Sec. 3	Sec. 3	Sec. 3	Sec. 3	Sec. 3	Sec. 2	Sec. 2	
	Surface Soil Nonresidential (mg/kg)	Surface Soil Residential (mg/kg)	Surface Soil Industrial (mg/kg)	Surface Soil Residential (mg/kg)	LS-58A	LS-59A	LS-60A	LS-61A	LS-62A	LS-63	LS-64	
					08/01/03	08/01/03	08/01/03	08/05/03	08/05/03	09/30/03	09/30/03	
Metals												
Mercury	122.40	16.20	32	2.1	x	x	x	x	x	x	x	
Arsenic	612.00	81.00	20	3.9	x	x	x	x	x	x	x	
Barium	10,000.00	10,000.00	5,900	1,600	x	x	x	x	x	x	x	
Cadmium	1,020.00	135.00	77	7.5	x	x	x	x	x	x	x	
Chromium	10,000.00	1,350.00	120	38	x	x	x	x	x	x	x	
Lead	NA	NA	230	81	870(3)	280(3)	140(2)	76	18	2.5	4.2	
Selenium	10,000.00	1,350.00	53	5.2	x	x	x	x	x	x	x	
Silver	10,000.00	1,350.00	87	31	x	x	x	x	x	x	x	

NOTES: *Data Quality Objectives and Cleanup Goals per Indiana Department of Environmental Management, in the Resource Guide for the Indiana Voluntary Remediation Program (VRP July 1996) and Risk Integrated System of Closure Technical Guide - Appendix 1 (RISC February 15, 2001).*

All values are mg/kg (or parts per million).

1 - Analytic specific cleanup goal not listed in VRP or RISC cleanup goals

2 - Exceeds RISC Residential cleanup goal only

3 - Exceeds RISC Industrial and Residential cleanup goals

J - Estimated value detected below reporting limits (metals/organics)

NA - Not Applicable

"--" - Data point below reporting values

"x" - Parameter not analyzed

Table 8b
J-PIT Redevelopment
Phase II Site Assessment
Paul's Auto Yard Lead/RCRA Metal Results

	VRP Cleanup Goals		RISC Cleanup Goals		Sec. 3	Sec. 3	Sec. 3	Sec. 3	Sec. 3	Sec. 3	Sec. 3	Sec. 3	Sec. 3
	Suburface Soil Nonresidential (mg/kg)	Suburface Soil Residential (mg/kg)	Subsurface Soil Industrial (mg/kg)	Suburface Soil Residential (mg/kg)	LS-01C	LS-02B	LS-03C	LS-06B	LS-08B	LS-08BD	LS-08C	LS-09B	LS-10B
					07/23/03	07/23/03	07/23/03	07/24/03	07/23/03	07/23/03	07/23/03	07/23/03	07/23/03
Metals													
Mercury	87.60	87.60	32	2.1	x	x	x	x	x	x	x	x	x
Arsenic	438.00	438.00	20	3.9	x	x	x	x	x	x	x	x	x
Barium	10,000.00	10,000.00	5,900	1,600	x	x	x	x	x	x	x	x	x
Cadmium	730.00	730.00	77	7.5	x	x	x	x	x	x	x	x	x
Chromium	7,3000.00	7300	120	38	x	x	x	x	x	x	x	x	x
Lead	NA	NA	230	81	2.0	2.5	2.3	13	**170**(2)	**210**(2)	2.0	**1,500**(3)	2.0
Selenium	7,300.00	7,300.00	53	5.2	x	x	x	x	x	x	x	x	x
Silver	7,300.00	7,300.00	87	31	x	x	x	x	x	x	x	x	x

	VRP Cleanup Goals		RISC Cleanup Goals		Sec. 3	Sec. 3	Sec. 3	Sec. 3	Sec. 3	Sec. 3	Sec. 3	Sec. 3	Sec. 3
	Suburface Soil Nonresidential (mg/kg)	Suburface Soil Residential (mg/kg)	Subsurface Soil Industrial (mg/kg)	Suburface Soil Residential (mg/kg)	LS-10D	LS-11B	LS-11C	LS-12B	LS-12BD	LS-12C	LS-13B	LS-15C	LS-16B
					07/23/03	07/23/03	07/23/03	07/23/03	07/23/03	07/23/03	07/23/03	07/23/03	07/23/03
Metals													
Mercury	87.60	87.60	32	2.1	x	x	x	0.81	x	x	x	x	x
Arsenic	438.00	438.00	20	3.9	x	x	x	**6.3**(2)	x	x	x	x	x
Barium	10,000.00	10,000.00	5,900	1,600	x	x	x	340	x	x	x	x	x
Cadmium	730.00	730.00	77	7.5	x	x	x	**10**(2)	x	x	x	x	x
Chromium	7,3000.00	7300	120	38	x	x	x	**64**(2)	x	x	x	x	x
Lead	NA	NA	230	81	2.4	**1,000**(3)	2.1	**660**(3)	**930**(3)	1.3	**660**(3)	2.9	11
Selenium	7,300.00	7,300.00	53	5.2	x	x	x	--	x	x	x	x	x
Silver	7,300.00	7,300.00	87	31	x	x	x	--	x	x	x	x	x

NOTES: *Data Quality Objectives and Cleanup Goals per Indiana Department of Environmental Management, in the Resource Guide for the Indiana Voluntary Remediation Program (VRP July 1996) and Risk Integrated System of Closure Technical Guide - Appendix 1 (RISC February 15, 2001).*

All values are mg/kg (or parts per million).

1 - Analytic specific cleanup goal not listed in VRP or RISC cleanup goals

2 - Exceeds RISC Residential cleanup goal only

3 - Exceeds RISC Industrial and Residential cleanup goals

J - Estimated value detected below reporting limits (metals/organics)

NA - Not Applicable

"--" - Data point below reporting values

"x" - Parameter not analyzed

Table 8b
J-PIT Redevelopment
Phase II Site Assessment
Paul's Auto Yard Lead/RCRA Metal Results

	VRP Cleanup Goals		RISC Cleanup Goals		Sec. 3	Sec. 3	Sec. 3	Sec. 3	Sec. 3	Sec. 3	Sec. 3	Sec. 3	Sec. 2
	Suburface Soil Nonresidential (mg/kg)	Suburface Soil Residential (mg/kg)	Subsurface Soil Industrial (mg/kg)	Suburface Soil Residential (mg/kg)	LS-17B	LS-18B	LS-20B	LS-21B	LS-22B	LS-23B	LS-24B	LS-25B	LS-26B
					07/24/03	07/23/03	07/23/03	07/23/03	07/23/03	07/23/03	07/23/03	07/24/03	07/24/03
Metals													
Mercury	87.60	87.60	32	2.1	x	x	x	x	x	x	x	x	x
Arsenic	438.00	438.00	20	3.9	x	x	x	x	x	x	x	x	x
Barium	10,000.00	10,000.00	5,900	1,600	x	x	x	x	x	x	x	x	x
Cadmium	730.00	730.00	77	7.5	x	x	x	x	x	x	x	x	x
Chromium	7,3000.00	7300	120	38	x	x	x	x	x	x	x	x	x
Lead	NA	NA	230	81	**140**(2)	14	1.1	1.4	2.4	1.5	3.9	3.0	**3,200**(3)
Selenium	7,300.00	7,300.00	53	5.2	x	x	x	x	x	x	x	x	x
Silver	7,300.00	7,300.00	87	31	x	x	x	x	x	x	x	x	x

	VRP Cleanup Goals		RISC Cleanup Goals		Sec. 2	Sec. 2	Sec. 2	Sec. 2	Sec. 2	Sec. 2	Sec. 2	Sec. 2	Sec. 2
	Suburface Soil Nonresidential (mg/kg)	Suburface Soil Residential (mg/kg)	Subsurface Soil Industrial (mg/kg)	Suburface Soil Residential (mg/kg)	LS-27B	LS-28B	LS-29B	LS-30B	LS-32B	LS-34B	LS-34C	LS-36B	LS-37B
					07/24/03	07/24/03	07/24/03	07/24/03	07/31/03	07/31/03	07/31/03	07/31/03	07/31/03
Metals													
Mercury	87.60	87.60	32	2.1	x	x	x	x	x	0.24	x	x	x
Arsenic	438.00	438.00	20	3.9	x	x	x	x	x	**28**(3)	x	x	x
Barium	10,000.00	10,000.00	5,900	1,600	x	x	x	x	x	720	x	x	x
Cadmium	730.00	730.00	77	7.5	x	x	x	x	x	**22**(2)	x	x	x
Chromium	7,3000.00	7300	120	38	x	x	x	x	x	31	x	x	x
Lead	NA	NA	230	81	4.3	4.3	6.4	**120**(2)	4.3	**3,100**(3)	3.1	19	8.6
Selenium	7,300.00	7,300.00	53	5.2	x	x	x	x	x	--	x	x	x
Silver	7,300.00	7,300.00	87	31	x	x	x	x	x	--	x	x	x

NOTES: *Data Quality Objectives and Cleanup Goals per Indiana Department of Environmental Management, in the Resource Guide for the Indiana Voluntary Remediation Program (VRP July 1996) and Risk Integrated System of Closure Technical Guide - Appendix 1 (RISC February 15, 2001).*

All values are mg/kg (or parts per million).

1 - Analytic specific cleanup goal not listed in VRP or RISC cleanup goals

2 - Exceeds RISC Residential cleanup goal only

3 - Exceeds RISC Industrial and Residential cleanup goals

J - Estimated value detected below reporting limits (metals/organics)

NA - Not Applicable

"--" - Data point below reporting values

"x" - Parameter not analyzed

Table 8b
J-PIT Redevelopment
Phase II Site Assessment
Paul's Auto Yard Lead/RCRA Metal Results

	VRP Cleanup Goals		RISC Cleanup Goals		Sec. 3	Sec. 3	Sec. 3	Sec. 3	Sec. 3	Sec. 3	Sec. 3	Sec. 3	Sec. 3
	Suburface Soil Nonresidential (mg/kg)	Suburface Soil Residential (mg/kg)	Subsurface Soil Industrial (mg/kg)	Suburface Soil Residential (mg/kg)	LS-38B	LS-39B	LS-39C	LS-40B	LS-41B	LS-42B	LS-43B	LS-43C	LS-43CD
					07/31/03	07/31/03	07/31/03	07/31/03	07/31/03	07/31/03	07/31/03	07/31/03	07/31/03
Metals													
Mercury	87.60	87.60	32	2.1	x	x	x	x	x	x	x	x	x
Arsenic	438.00	438.00	20	3.9	x	x	x	x	x	x	x	x	x
Barium	10,000.00	10,000.00	5,900	1,600	x	x	x	x	x	x	x	x	x
Cadmium	730.00	730.00	77	7.5	x	x	x	x	x	x	x	x	x
Chromium	7,3000.00	7300	120	38	x	x	x	x	x	x	x	x	x
Lead	NA	NA	230	81	1.8	12	2.9	5.5	1.9	5.9	2.9	3.2	2.5
Selenium	7,300.00	7,300.00	53	5.2	x	x	x	x	x	x	x	x	x
Silver	7,300.00	7,300.00	87	31	x	x	x	x	x	x	x	x	x

	VRP Cleanup Goals		RISC Cleanup Goals		Sec. 3	Sec. 3	Sec. 3	Sec. 3	Sec. 3	Sec. 3	Sec. 3	Sec. 3	Sec. 3
	Suburface Soil Nonresidential (mg/kg)	Suburface Soil Residential (mg/kg)	Subsurface Soil Industrial (mg/kg)	Suburface Soil Residential (mg/kg)	LS-44B	LS-45B	LS-46B	LS-47B	LS-48B	LS-49B	LS-50B	LS-50BD	LS-51B
					07/31/03	07/31/03	07/31/03	08/01/03	08/01/03	08/01/03	08/01/03	08/01/03	08/01/03
Metals													
Mercury	87.60	87.60	32	2.1	x	x	x	x	x	x	x	x	x
Arsenic	438.00	438.00	20	3.9	x	x	x	x	x	x	x	x	x
Barium	10,000.00	10,000.00	5,900	1,600	x	x	x	x	x	x	x	x	x
Cadmium	730.00	730.00	77	7.5	x	x	x	x	x	x	x	x	x
Chromium	7,3000.00	7300	120	38	x	x	x	x	x	x	x	x	x
Lead	NA	NA	230	81	3.6	540(3)	1800(3)	3.0	2.1	5.8	2.4	2.8	3.8
Selenium	7,300.00	7,300.00	53	5.2	x	x	x	x	x	x	x	x	x
Silver	7,300.00	7,300.00	87	31	x	x	x	x	x	x	x	x	x

NOTES: *Data Quality Objectives and Cleanup Goals per Indiana Department of Environmental Management, in the Resource Guide for the Indiana Voluntary Remediation Program (VRP July 1996) and Risk Integrated System of Closure Technical Guide - Appendix 1 (RISC February 15, 2001).*

All values are mg/kg (or parts per million).

1 - Analytic specific cleanup goal not listed in VRP or RISC cleanup goals

2 - Exceeds RISC Residential cleanup goal only

3 - Exceeds RISC Industrial and Residential cleanup goals

J - Estimated value detected below reporting limits (metals/organics)

NA - Not Applicable

"--" - Data point below reporting values

"x" - Parameter not analyzed

Table 8b
J-PIT Redevelopment
Phase II Site Assessment
Paul's Auto Yard Lead/RCRA Metal Results

	VRP Cleanup Goals		RISC Cleanup Goals		Sec. 3	Sec. 3	Sec. 3	Sec. 3	Sec. 3	Sec. 3	Sec. 3	Sec. 3	Sec. 3
	Suburface Soil Nonresidential (mg/kg)	Suburface Soil Residential (mg/kg)	Subsurface Soil Industrial (mg/kg)	Suburface Soil Residential (mg/kg)	LS-52B	LS-52BD	LS-53B	LS-54B	LS-55B	LS-56B	LS-57B	LS-58C	LS-58CD
					08/01/03	08/01/03	08/01/03	08/01/03	08/01/03	08/01/03	08/01/03	08/01/03	08/01/03
Metals													
Mercury	87.60	87.60	32	2.1	x	x	x	x	x	x	x	--	--
Arsenic	438.00	438.00	20	3.9	x	x	x	x	x	x	x	1.1	1.8
Barium	10,000.00	10,000.00	5,900	1,600	x	x	x	x	x	x	x	3.1	4.7
Cadmium	730.00	730.00	77	7.5	x	x	x	x	x	x	x	--	0.45
Chromium	7,3000.00	7300	120	38	x	x	x	x	x	x	x	0.67	2.0
Lead	NA	NA	230	81	1.9	1.7	2.3	3.5	2.7	**300**(3)	**200**(2)	2.3	8.7
Selenium	7,300.00	7,300.00	53	5.2	x	x	x	x	x	x	x	--	--
Silver	7,300.00	7,300.00	87	31	x	x	x	x	x	x	x	--	--

	VRP Cleanup Goals		RISC Cleanup Goals		Sec. 3	Sec. 3
	Suburface Soil Nonresidential (mg/kg)	Suburface Soil Residential (mg/kg)	Subsurface Soil Industrial (mg/kg)	Suburface Soil Residential (mg/kg)	LS-59B	LS-60B
					08/01/03	08/01/03
Metals						
Mercury	87.60	87.60	32	2.1	--	x
Arsenic	438.00	438.00	20	3.9	1.3	x
Barium	10,000.00	10,000.00	5,900	1,600	16	x
Cadmium	730.00	730.00	77	7.5	0.34	x
Chromium	7,3000.00	7300	120	38	4.1	x
Lead	NA	NA	230	81	26	**99**(2)
Selenium	7,300.00	7,300.00	53	5.2	--	x
Silver	7,300.00	7,300.00	87	31	--	x

NOTES: *Data Quality Objectives and Cleanup Goals per Indiana Department of Environmental Management, in the Resource Guide for the Indiana Voluntary Remediation Program (VRP July 1996) and Risk Integrated System of Closure Technical Guide - Appendix 1 (RISC February 15, 2001).*

All values are mg/kg (or parts per million).

1 - Analytic specific cleanup goal not listed in VRP or RISC cleanup goals

2 - Exceeds RISC Residential cleanup goal only

3 - Exceeds RISC Industrial and Residential cleanup goals

J - Estimated value detected below reporting limits (metals/organics)

NA - Not Applicable

"--" - Data point below reporting values

"x" - Parameter not analyzed

Table 8c
J-PIT Redevelopment
Phase II Site Assessment
Paul's Auto Yard Lead/TCLP Metal Results

	RCRA Hazardous Waste Criteria					
	Regulatory Level (mg/L)	LS-34B	LS-45A	LS-59B	LSCM-1[1]	LSCM-2[2]
		07/31/03	07/31/03	08/01/03	07/23/03	07/24/03
Metals						
Mercury	0.2	--	--	--	--	--
Arsenic	5.0	--	--	--	--	--
Barium	100.0	9.4	1.8	0.66	1.7	0.79
Cadmium	1.0	0.037	0.12	--	0.12	--
Chromium	5.0	--	--	--	--	--
Lead	5.0	1.5	1.1	--	0.66	--
Selenium	1.0	--	--	--	--	--
Silver	5.0	--	--	--	--	--

NOTES: *Regulatory Levels were taken as per RCRA Toxicity characteristic 40 CFR 261.24.*

All values are mg/kg (or parts per million).

1 - Composite of LS-6A, 13A, 15A, & 18A

2 - Composite of LS-26A, 27A, 28A, & 29A

NA - Not Applicable

"--" - Data point below reporting values

Table 9a
J-PIT Redevelopment
Phase II Site Assessment
Surface Soil Duplicate Sample Comparisons

	Sample ID	S-1C	S-1C D	Relative Percent Difference (%)	SS-5-01		SS-5-01D		Relative Percent Difference (%)
	Date	11/05/02	11/05/02		11/07/02		11/07/02		
	Sample Type	Sample	Duplicate		Sample		Duplicate		
	Sample Media	SB	SB		SB		SB		
Parameter	CAS Number								
Semivolatile Organic Compounds									
Anthracene	120-12-7	x	x		0.069		0.110		46%
Benzo[a]anthracene	56-55-3	x	x		0.300		0.360		18%
Benzo[a]pyrene	50-32-8	x	x		0.280		0.0285	(1)	163%
Benzo[b]fluoranthene	205-99-2	x	x		0.290		0.240		19%
Benzo[g,h,i]perylene	191-24-2	x	x		0.190		0.190		0%
Benzo[k]fluoranthene	207-08-9	x	x		0.170		0.220		26%
Chrysene	218-01-9	x	x		0.320		0.370		14%
Dibenz[a,h]anthracene	53-70-3	x	x		0.070	J	0.060	J	15%
Fluoranthene	206-44-0	x	x		0.580		0.870		40%
Ideno[1,2,3-cd]pyrene	193-39-5	x	x		0.170		0.170		0%
Phenanthrene	85-01-8	x	x		0.250		0.430		53%
Pyrene	129-00-0	x	x		0.490		0.720		38%
Volatile Organic Compounds									
Methylene chloride	75-09-2	x	x		0.0054		0.0053		2%
Metals									
Arsenic	7440-38-2	1.2	3.8	104%	8.1		7.2		12%
Barium	7440-39-3	15	16	6%	45		44		2%
Cadmium	7440-43-9	0.45	1.4	103%	1.3		1.2		8%
Chromium	7440-47-3	2.7	13	131%	16		16		0%
Lead	7439-92-1	21	25	17%	22		22		0%
Selenium	7782-49-2	--	--		5.6		4.6		20%

Notes: *All values listed are in mg/kg.*

1 - Value listed as non detect. One half the detection limit was used for calculation purposes.

J - Estimated value detected below reporting limits (metals/organics)

"--" - Data point below reporting values

"x" - Parameter not analyzed

Table 9b
J-PIT Redevelopment
Phase II Site Assessment
Subsurface Soil Duplicate Sample Comparisons

	Sample ID	SB-10-01		SB-10-01D	Relative Percent Difference (%)	SB-26-01		SB-26-01D		Relative Percent Difference (%)	SB-30-01		SB-30-01D	Relative Percent Difference (%)
	Date	11/05/02		11/05/02		11/13/02		11/13/02			11/20/2002		11/20/2002	
	Sample Type	Sample		Duplicate		Sample		Duplicate			Sample		Duplicate	
	Sample Media	SB		SB		SB		SB			SB		SB	
Parameter	CAS Number													
Semivolatile Organic Compounds														
Benzo[g,h,i]perylene	191-24-2	--		--		0.040	J	0.029	(1)	32%	--		--	
Dibenzo[a,h]anthracene	53-70-3	--		--		0.050	J	0.040	J	22%	--		--	
Indeno[1,2,3-cd]pyrene	193-39-5	--		--		0.040	J	0.040	J	0%	--		--	
Volatile Organic Compounds														
Dibromochloromethane	124-48-1	--		--		--		--			0.0044		0.0048	9%
Ethylbenzene	100-41-4	--		--		--		--			0.00031	(1)	0.0011	112%
m,p-Xylene	1330-20-7	0.0012	(1)	0.003	86%	--		--			0.0028		0.0035	22%
Methylene chloride	75-09-2	0.00165	(1)	0.0079	131%	0.012		0.010		18%	0.0070		0.0063	11%
Tetrachloroethene	127-18-4	--		--		--		--			0.0045		0.0054	18%
Toluene	108-88-3	0.00085	(1)	0.0035	122%	--		--			0.0085	(1)	0.0018	130%
Total Xylenes	No Number	0.0013	(1)	0.003	79%	--		--			0.0028		0.0035	22%

Notes: *All values listed are in mg/kg.*

1 - Value listed as non detect. One half the detection limit was used for calculation purposes.

J - Estimated value detected below reporting limits (metals/organics)

"--" - Data point below reporting values

Table 9c
J-PIT Redevelopment
Phase II Site Assessment
Sediment Duplicate Sample Comparisons

	Sample ID	SD-02		SD-02D		Relative Percent Difference (%)
	Date	11/21/02		11/21/02		
	Sample Type	Sample		Duplicate		
	Sample Media	SD		SD		
Parameter						
Semivolatile Organic Compounds	**CAS Number**					
Benzo[b]fluoranthene	205-99-2	0.067		0.050	J	29%
Benzo[g,h,i]perylene	191-24-2	0.060	J	0.029	(1)	70%
Ideno[1,2,3-cd]pyrene	193-39-5	0.050	J	0.0365	(1)	31%
Volatile Organic Compounds						
Methylene chloride	75-09-2	0.0065		0.0067		3%
Metals						
Arsenic	7440-38-2	4.7		4.9		4%
Barium	7440-39-3	15		11		31%
Cadmium	7440-43-9	0.89		1.2		30%
Chromium	7440-47-3	5.2		7.8		40%
Lead	7439-92-1	7.3		9.1		22%
Selenium	7782-49-2	3.9		4.4		12%

Notes: *All values listed are in mg/kg.*

1 - Value listed as non detect. One half the detection limit was used for calculation purposes.

J - Estimated value detected below reporting limits (metals/organics)

Table 9d
J-PIT Redevelopment
Phase II Site Assessment
Surface Water Duplicate Sample Comparisons

	Sample ID	SW-02		SW-02D		Relative Percent Difference (%)
	Date	11/21/02		11/21/02		
	Sample Type	Sample		Duplicate		
	Sample Media	SW		SW		
Parameter						
Metals	CAS Number					
Arsenic	7440-38-2	0.018		0.011		48%
Barium	7440-39-3	0.090		0.13		36%
Selenium	7782-49-2	0.032		0.03	J	6%

Notes: *All values listed are in mg/L.*

J - Estimated value detected below reporting limits (metals/organics

Table 9e
J-PIT Redevelopment
Phase II Site Assessment
Groundwater Round 1 Duplicate Sample Comparisons

	Sample ID	MW-7-01		MW-7D-01	Relative Percent Difference (%)	MW-8-01R		MW-8-01D		Relative Percent Difference (%)	MW-12-01	MW-12D-01	Relative Percent Difference (%)
	Date	12/11/02		12/11/02		12/23/02		12/23/02			12/11/02	12/11/02	
	Sample Type	Sample		Duplicate		Sample		Duplicate			Sample	Duplicate	
	Sample Media	GW		GW		GW		GW			GW	GW	
Parameter	CAS Number												
Semivolatile Organic Compounds													
Fluorene	86-73-7	--		--		0.0005	J	0.0003	J	50%	--	X	
Metals													
Mercury	7439-97-6	0.0001	(1)	0.00035	111%	--		--			--	--	
Arsenic	7440-38-2	0.026		0.030	14%	0.052		0.050		4%	0.029	0.036	22%
Barium	7440-39-3	0.13		0.15	14%	0.12		0.11		9%	0.17	0.18	6%
Cadmium	7440-43-9	0.0064		0.0079	21%	0.011		0.010		10%	0.0068	0.0075	10%
Chromium	7440-47-3	0.028		0.042	40%	0.019		0.015		24%	0.0075	0.011	38%
Lead	7439-92-1	0.050		0.060	18%	0.039		0.031		23%	0.034	0.039	14%
Selenium	7782-49-2	--		--		--		--			0.036	0.037	3%

Notes: *All values listed are in mg/L.*

1 - Value listed as non detect. One half the detection limit was used for calculation purposes.

J - Estimated value detected below reporting limits (metals/organics)

"--" - Data point below reporting values

"x" - Parameter not analyzed

Table 9f
J-PIT Redevelopment
Phase II Site Assessment
Groundwater Round 2 Duplicate Sample Comparisons

	Sample ID	MW-5-02	MW-5-02D	Relative Percent Difference (%)	MW-6-02	MW-6-02D	Relative Percent Difference (%)
	Date	07/28/03	07/28/03		07/30/03	07/30/03	
	Sample Type	Sample	Duplicate		Sample	Duplicate	
	Sample Media	GW	GW		GW	GW	
Parameter	CAS Number						
Volatile Organic Compounds							
Methyl-t-Butyl Ether	1634-04-4	--	--		0.048	0.047	2%
Metals							
Arsenic	7440-38-2	0.084	0.094	11%	0.016	0.021	27%
Barium	7440-39-3	0.064	0.063	2%	0.060	0.053	12%
Cadmium	7440-43-9	0.0024	0.0024	0%	--	--	
Chromium	7440-47-3	0.0045	0.033	152%	--	--	
Lead	7439-92-1	0.019	0.020	5%	0.031	0.028	10%

Notes: *All values listed are in mg/L.*
"--" - Data point below reporting values

Table 10
J-PIT Redevelopment
Phase II Site Assessment
Low Flow Sampling Evaluation Results

	VRP Cleanup Goals		RISC Cleanup Goals										
	Surface Soil Nonresidential (mg/kg)	Surface Soil Residential (mg/kg)	Surface Soil Industrial (mg/kg)	Surface Soil Residential (mg/kg)	MW-15-03	MW-15-03D	MW-11-03	MW-11-03B	MW-3-03	MW-8-03	MW-05-03	MW-05-03B	MW-05-03BF
					12/22/03	12/22/03	12/22/03	12/22/03	12/22/03	12/22/03	12/23/03	12/23/03	12/23/03
Metals													
Arsenic	612.00	81.00	20	3.9	--	--	--	0.034	--	--	0.027	0.031	0.015
Lead	NA	NA	230	81	--	--	--	--	--	--	--	0.012	--

NOTES: *Data Quality Objectives and Cleanup Goals per Indiana Department of Environmental Management, in the Resource Guide for the Indiana Voluntary Remediation Program (VRP July 1996) and Risk Integrated System of Closure Technical Guide - Appendix 1 (RISC February 15, 2001).*

All values are mg/kg (or parts per million).

"--" - Data point below reporting values

Table 11
J-PIT Redevelopment
Phase II Site Assessment
Groundwater Elevations

Well Number	Northing	Easting	Top of PVC	Ground Elevation	Groundwater Elevation					
					November-02		April-03		July-03	
					Depth to Water (ft)	GW Elevation (ft)	Depth to Water (ft)	GW Elevation (ft)	Depth to Water (ft)	GW Elevation (ft)
MW-1	2308804.16	2861754.49	608.21	605	26.96	581.25	27.08	581.13	26.87	581.34
MW-2	2308756.2	2862471.31	610.32	609.1	28.02	582.3	28.01	582.31	27.49	582.83
MW-3	2309283.2	2862744.8	605.52	602.7	19.82	585.7	20.37	585.15	18.65	586.87
MW-4	2309380.98	2862126.33	604.68	602.5	17.51	587.17	18.29	586.39	16.8	587.88
MW-5	2306629.83	2862676.74	612.11	609.1	13.32	598.79	12.31	599.80	8.05	604.06
MW-6	2306178.7	2863029.21	610.75	607.5	9.76	600.99	8.42	602.33	5.53	605.22
MW-7	2305491.91	2863413.08	609.16	605.9	8.47	600.69	6.24	602.92	4.48	604.68
MW-8	2306442.8	2862482.33	608.87	607.1	10.77	598.1	10.13	598.74	6.67	602.20
MW-9	2306812.91	2862246.52	612.02	609.3	20.52	591.5	20.59	591.43	19.37	592.65
MW-10	2307544.68	2859936.76	612.44	610.1	21.68	590.76	22.53	589.91	20.56	591.88
MW-11	2306538.61	2859919.95	609.92	607.6	14.04	595.88	13.50	596.42	11.64	598.28
MW-12	2306790.04	2860614.53	612.98	611.3	24.21	588.77	24.28	588.70	23.41	589.57
MW-13	2306280.56	2861377.85	608.81	606.1	13.83	594.98	13.38	595.43	11.86	596.95
MW-14	2306242.17	2861878.63	609.45	607.2	12.92	596.53	12.24	597.21	10.39	599.06
MW-15	2308771.47	2859996.65	610.12	607.5	20.01	590.11	20.39	589.73	19.21	590.91
MW-16	2305980.99	2863797.15	610.54	606.6	7.96	602.58	6.89	603.65	5.3	605.24
MW-17	2306655.79	2863577.54	611.13	608.1	-	-	-	-	4.9	606.23

FIGURES

FIGURES

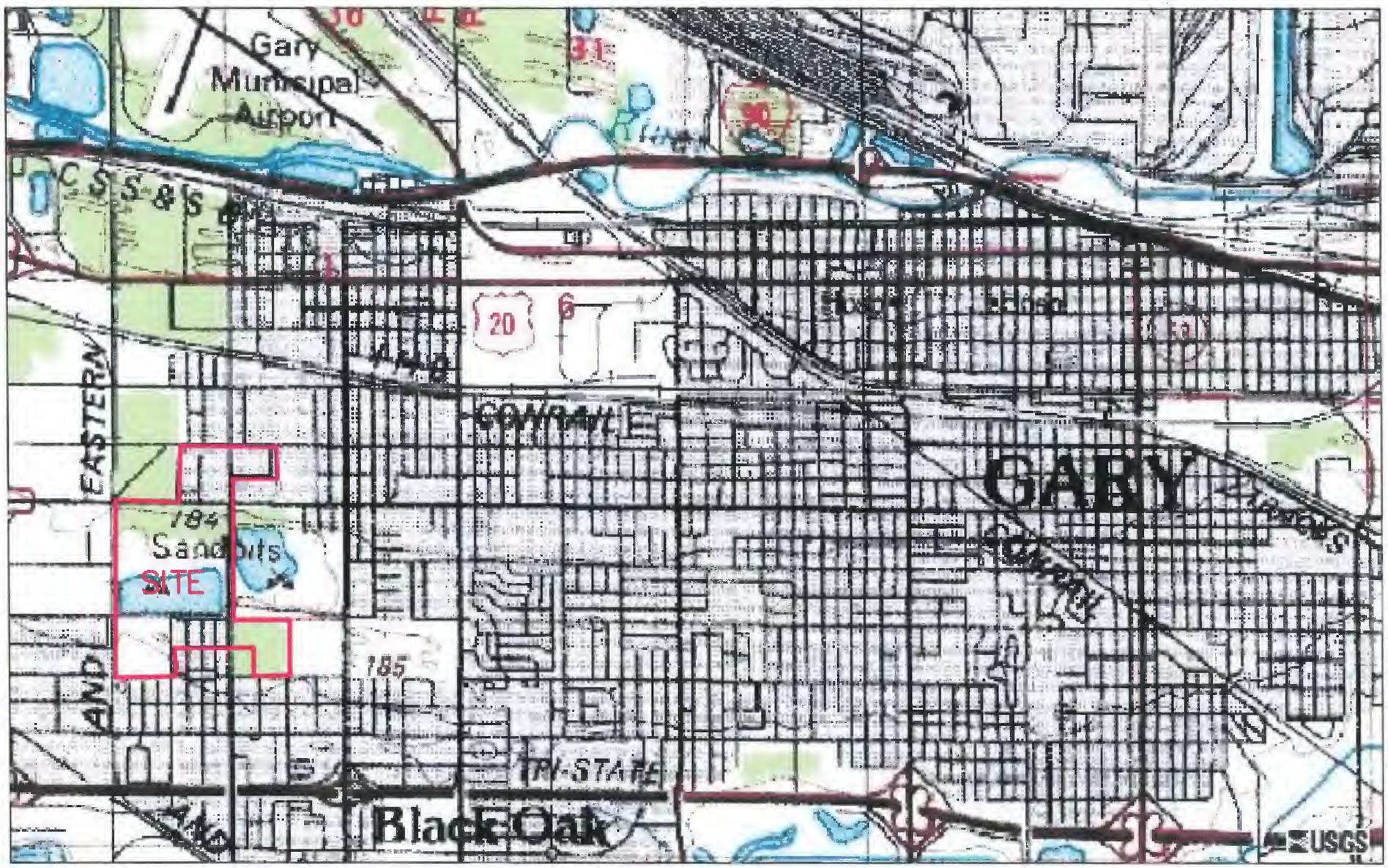

CONTOUR INTERVAL 10 FEET

US GEOLOGICAL SURVEY, JULY 01, 1991

GARY/HIGHLAND QUADRANGLE

APPROX. SCALE: 1" = 45,000' S.O. No. 25290-000-0000 DATE: DECEMBER, 2003 FILE: Figure 1.dwg	FIGURE 1 SITE LOCATION MAP J-PIT PHASE II ESA CITY OF GARY GARY, INDIANA	Baker BAKER ENVIRONMENTAL, INC

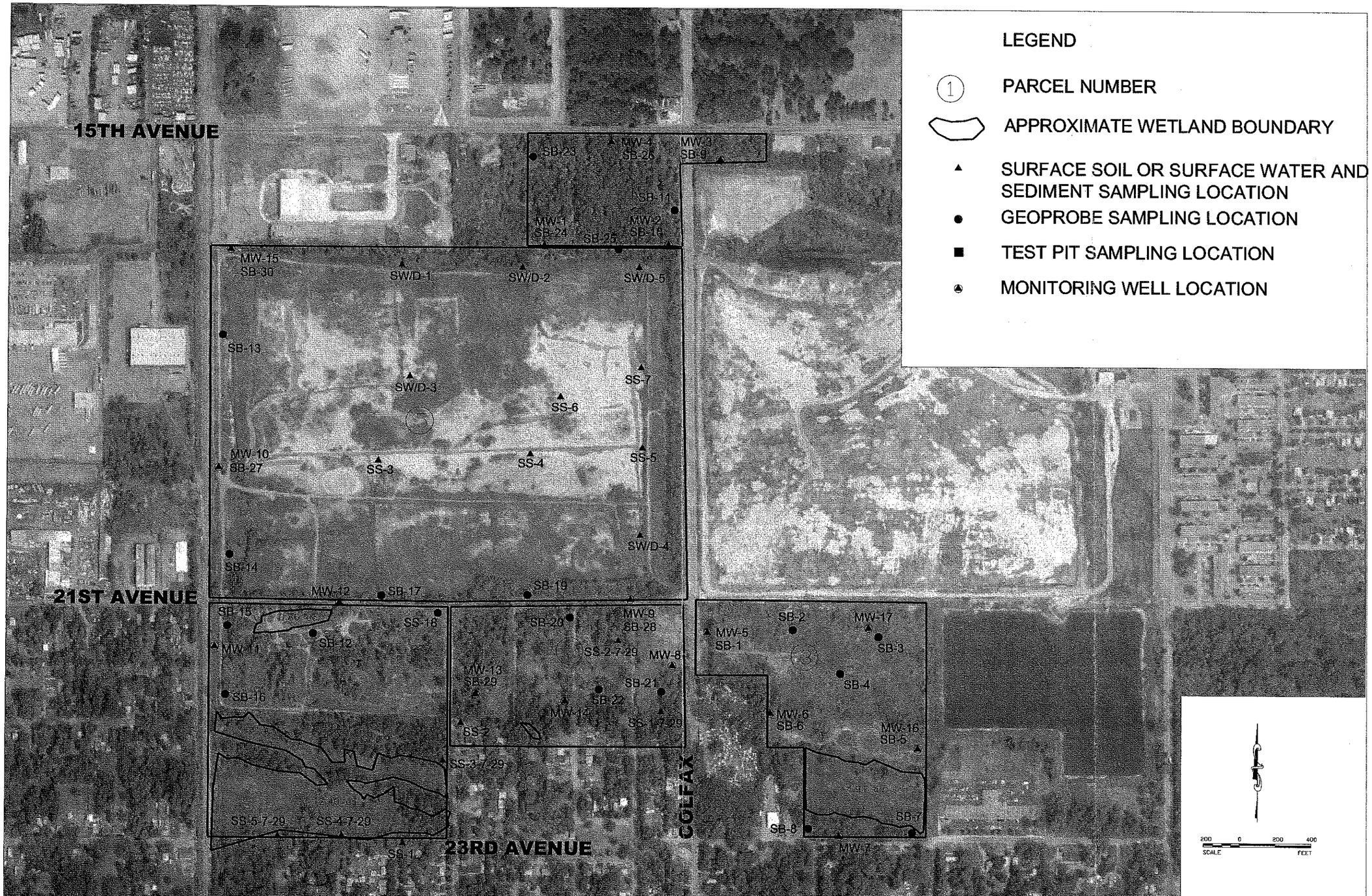

BASE MAP AND WETLAND DELINEATION PROVIDED BY V3 CONSULTANTS WOODRIDGE, ILLINOIS

Baker
BAKER ENVIRONMENTAL, INC.
CROWN POINT, INDIANA

REVISIONS					
NO.	DATE	DESCRIPTION	NO.	DATE	DESCRIPTION

SEAL

PROJ. NO.: B25290	DESIGNED BY: RMS
FILE NAME: Figure 3	DRAWN BY: RMS
DATE: NOV, 2003	CHECKED BY: NOV, 2003
SCALE: AS SHOWN	PROJ. MAN.: WMP

J-PIT PHASE II ESA
CITY OF GARY
GARY, INDIANA

FIGURE 3
SAMPLE / MONITORING WELL LOCATION MAP

DRAWING NO.

11-57

OFFICE OF THE MAYOR
GARY, INDIANA 46402 - 1236

SCOTT L. KING
MAYOR

(219) 881-1301
FAX (219) 881-1337

February 14, 2000

U. S. Environmental Protection Agency
OSWER Outreach and Special Projects Staff (5101)
401 M Street, SW
Room SE 385
Washington, DC 20460

To the Selection Committee,

Please find attached the City of Gary application for funding through the USEPA Brownfields Assessment Demonstration Pilot grant. Assessment, clean up and redevelopment of the hundreds of abandoned and underutilized properties in the city is key to the revitalization of our area's economy, the remediation of our environment, and the enhancement of the quality of life of our residents.

The city has targeted the Gary Airport Development Zone for the first phase of brownfield assessment and clean up due to the large number of brownfield sites in the ADZ and the very real and time-sensitive opportunities for business development associated with the expansion of the Gary Chicago Airport.

This proposal focuses on a 200-acre development site, located in the ADZ, which was acquired by the city in the fall of 1999. The J-Pit is a former sand mine surrounded by undeveloped and abandoned property. The assessment and clean up of these properties will provide the foundation for a comprehensive plan for redevelopment which incorporates a light industrial complex with preservation and enhancement of natural areas. The conceptual plan has been reviewed by the surrounding community and meets their vision and goals for community redevelopment and the protection of residents' health. The City of Gary Department of Environmental Affairs heads up the Gary Interdepartmental Brownfields Team and will manage the Pilot Project.

Your support of this proposal will allow the city move forward on a much needed and timely redevelopment and community revitalization project that can serve as a model for sustainable brownfields clean up and reuse throughout our region.

Thank you for your consideration of our application.

Sincerely,

Scott L. King
Mayor

11-57

USEPA Brownfields Assessment Demonstration Pilot Grant
COVER PAGE

Project Title:	**J-Pit Redevelopment Site**
Location:	City of Gary, Lake County, Indiana
Population (1990 census):	City - 116,646; Pilot Area – 17,126
Applicant Identification:	City of Gary, Indiana
Project Manager:	Mary Mulligan, Brownfields Specialist
Mailing Address:	Department of Environmental Affairs 504 Broadway, Suite 1012 Gary, Indiana 46402
Telephone/Fax:	(219) 882-3000; (219) 882-3012 (fax)
Representative:	Mayor Scott L. King
Mailing address:	401 Broadway Gary, Indiana 46402
Telephone/Fax:	(219) 881-1301; (219) 881-1337 (fax)
Date Submitted:	February 16, 2000
Project Period:	The project will be completed two years from date of award.

Community Background:

	Size	Population	Poverty	Unemployment
Gary	50.2 sq. miles	116,646	25%	7%
Target Area Community	10.4, sq. miles	17,126	est. at 25%	est. at 14%

Cooperative Partners:

Black Oak Redevelopment Corporation
Gary/Chicago Airport Authority
Gary Urban Enterprise Association
Gary Chamber of Commerce
Ivy Tech State College Northwest
Indiana University Northwest
Northwest Indiana Brownfield Redevelopment Project, Inc.
Grand Cal Task Force
Lake County Soil and Water Conservation District
Indiana Department of Environmental Management

Project Overview

In the early 1900's, Gary, Indiana was called the City of the Century due to its almost magical growth from the sand and swamps at the southern-most shores of Lake Michigan into a bustling metropolis and the economic hub of the mid-western steel region. Fueled by two world wars and a burgeoning consumer economy, Gary 's rise and subsequent decline were tied to the fortunes of its parent and dominant industry, U.S. Steel, Gary Works. Steel and oil from the Calumet Region helped build this country and win the wars. Waves of immigrants from Europe, Mexico, and Puerto Rico and migrants from the American South and Southwest found jobs, acquired homes and developed communities in Gary. The smoke from industrial furnaces meant jobs and a better life for thousands who came to Gary seeking escape from poverty and oppression.

Beginning in the 1960's, however, competition from worldwide steel production, racial divisions, and loss of federal support for social programs began a downward trend in Gary's economic base and a subsequent loss of jobs and population. More than 100,000 steel and steel related jobs were lost in Northwest Indiana due to the downsizing of Big Steel and the loss of associated industrial and commercial enterprise. The workforce at Gary Works dropped from over 20,000 in the 1970's to 6,000 in the 1990's. In that same period, the City of Gary's population dropped by 40%, the greatest loss among cities over 100,000 in the United States. In August 1998, the average unemployment rate in Gary was 7.1 % more than twice the state's unemployment rate of 2.8%.

Not only has Gary lost jobs and residents, but it has also been left with environmental problems created by decades of industrial production. Gary is ringed by superfund sites and has a continuing problem with illegal dumping. Shuttered factories and abandoned business and residential properties dominate many neighborhoods. Despite regulatory initiatives and public pressures that have brought significant environmental improvements since the early 1990s, the air quality remains poor, non-attainment for TSP, CO, SO2, VOC, and Ozone. The Grand Calumet River is clogged with industrial waste, groundwater is contaminated, and the globally unique dune and swale ecosystem is threatened.

Notwithstanding this historic decline, the City of Gary retains significant strengths and assets. First and foremost its location on the shores of Lake Michigan at the crossroads of the nation's expressways and rail systems. The Gary Chicago Airport is working with the city and private partners to expand into a reliever airport for Chicago. Major investments have been made in water-based casinos and related waterfront development. The steel industry has also upgraded mills in Gary and other Northwest Indiana cities. The unique environment and recreational resources of the Indiana Dunes and Lakeshore continue to draw visitors and local residents.

The government and people of the City of Gary are working together to bring jobs and revitalization to the city. The residents of the city have participated in design forums for the redevelopment of the Gary Waterfront adjacent to the Casino Boats and the restoration and beautification of the downtown area. There has been extensive public discussion regarding the targeted development areas in the city such as the Airport Development Zone and the Empowerment Zone. Public meetings have been held to educate local residents and receive input on the city's Brownfield program and its relationship to Gary redevelopment projects.

Through a broad public involvement and visioning process in 1999, Gary successfully partnered with East Chicago and Hammond, Indiana for Federal Empowerment Zone designation. The strategic plan is organized around a 1000 day implementation agenda and that includes the creation of 10,000 jobs, job training for residents, tax incentives for local business development, enhanced social services to residents, brownfield redevelopment, neighborhood restoration, environmental protection, and natural resource reclamation.

With the Empowerment Zone designation and other new and planned developments, there is much hope and real opportunity for a new future for the city. Along with this comes a widely recognized imperative for sustainable community-based economic development planning and revitalization programs that will protect both the people and the irreplaceable ecosystem in which they live and work.

Brownfields Redevelopment is recognized as key to the successful revitalization of the City of Gary. Abandoned and tax delinquent industrial, commercial, and residential properties are evident throughout the city. Because Gary is landlocked, new development must, in most cases, be redevelopment of previously utilized properties. A large-scale effort is underway by Lake County to reduce the number of tax delinquent properties, the highest percentage of which are in Gary, through frequent county tax sales. Gary has further implemented an aggressive demolition program both to protect public health and safety and to open up areas for redevelopment. Although brownfield sites are ubiquitous throughout the city, the first stage of Gary's redevelopment focus has

targeted the Airport Development Zone, the waterfront, and the Empowerment Zone area.

Focus of Proposal

This grant proposal focuses on the approximately 200 acre J-Pit Redevelopment Site, newly acquired by the city, and located within the 8,200 acre Airport Development Zone (ADZ). An inventory and assessment project funded by the Indiana Development Finance Authority is already underway in the ADZ, but the magnitude of the area, the number of brownfield sites, and the need to move as quickly as possible to meet potential market demands related to airport expansion, requires additional resources.

We have identified this site as our pilot not only because of its recent acquisition and the possibilities this offers to the city, but also because there has been a long-standing public concern regarding the environmental quality of this area. A small number of local residents use well water both for drinking and utility purposes. Because of the junk yards and illegal dumping associated with the J-Pit properties and their potential impact on groundwater, this grant will give us the opportunity to directly assess existing conditions and develop a plan to clean up any threats that may exist to public health and the environment. The city is also in discussion with the Northwest Indiana Water Company, the local water utility provider, to extend water lines to all areas of the city not yet serviced.

Ultimate Goal of the City of Gary's Brownfield Initiative

The ultimate goal of our Brownfield Program is to work with our partners and affected communities to identify, inventory and assess all existing brownfield properties, remediate where necessary, and return all properties to a safe and productive use. We will use the redevelopment of brownfields to create jobs, and provide opportunities for resident training and apprenticeship programs. The remediation of these sites will reduce blight, and health and environmental hazards, thus preventing the creation of future brownfield properties.

To aid in accomplishing our goals, we plan to:

- Inventory all brownfield properties in the city utilizing the city's brownfield inventory database beginning with the Airport Development Zone and the Empowerment Zone. The database consists of market and environmental information including photographs of the site and will be used for the purpose of assessment prioritization, assembly, and marketing. The brownfield inventory will be transferred to the city GIS system slated for completion in the year 2000.
- Do Phase I and Phase II Environmental Assessments on selected properties based on priorities of public health and development potential.
- Prioritize sites and facilitate the clean up, land assembly, and marketing to target audiences of brownfields for the purpose of bringing new business and jobs to Gary and further to improve the quality of life of Gary's residents through the protection of public health and the environment.
- Assure that the brownfield process and projects are open and accessible to the public and that the public plays a role in the decision making.
- Create a $500,000. Gary Brownfield Revolving Clean Up Fund in the year 2000 through city appropriation which will be utilized to fund environmental clean up. The fund will be replenished through sale and reuse of brownfield properties.
- Work with State and Federal governments to support and promote legislation contributing to assessment, clean up, and redevelopment of brownfield properties.

Project Specific Objectives

We plan to use the USEPA funding and other resources available through this grant to lay the foundations for a major redevelopment project on approximately 200 acres of abandoned and undeveloped property located in Gary's Airport Development Zone called the J-Pit Redevelopment Site. Our primary goal is to complete, in the course of a broad public information and decision-making process, all Phase I & II Environmental Site Assessments, characterizations, and remediation plans for the pilot site.

We will further utilize USEPA funding to assist the city in carrying out the public information and community involvement program associated with the site assessments and remedial planning for the J-Pit Pilot Project. We will work with the public and state and federal environmental agencies to develop clean up plans based on future uses that are protective of public health and the environment and which meet public expectations and needs. Through the creation of a J-Pit Brownfield Community Work Group we will make sure that everyone has a chance to provide input and all voices are heard. We will incorporate job training and apprenticeship opportunities for the residents that are impacted the most by the location of the pilot site.

To further contribute to the success of the public process, the city will develop and ongoing evaluation and feedback process that will

document public input and response and assure that public concerns and recommendations are being addressed in a meaningful way.

Building on the foundation supplied through USEPA assessment and planning resources, the city will proceed with the clean up and development of the J-Pit Redevelopment Site. Our objective is not only to redevelop the pilot site, but also to revitalize and improve the quality of life for the surrounding neighborhoods, and to prevent and correct any actual or threatened release of any hazardous substance or pollutant.

Project Strategy

The City of Gary Brownfields Team, led by the Brownfields Specialist, will provide management and oversight of the pilot project work and associated city brownfield policies. The city Brownfields Team consists of internal staff from the departments of Planning, Economic Development, Redevelopment, and Environment.

The city Brownfields Team will work with the J-Pit Brownfield Community Work Group to be made up of representatives of our project partners and supporters: community groups, business, educational and training institutions, local agencies, and state and federal government. The meetings of the Work Group will be open to the public.

To carry out the pilot, the J-Pit Brownfield Community Work Group will implement a (re)development plan that considers four important factors: (1) threats to public health and the environment, (2) community input and decision-making, (3) site re-use considerations, and (4) economic benefits. We believe that by responding effectively to each factor, we will successfully return these brownfield properties to a safe and productive use.

The J-Pit Brownfield Community Work Group will ensure, through a facilitated public process, that community needs are met and that sensitive issues such as acceptable cleanup standards, land use considerations, environmental justice concerns, job training and apprenticeship opportunities, and job creation for residents are publicly discussed and satisfactorily addressed. Information and technical assistance not available through city staff will be supplied through the resources of state and federal agencies and outside consultants.

The City's Brownfields Team will manage the grant, and, in consultation with the Brownfields Community Work Group, review and evaluate the assessments and remediation plans for the pilot site. With leadership from the Planning and Economic Development Departments, the City Brownfields Team will work with the Community Work Group to develop, from the existing conceptual plan, the final design and marketing plan for the J-Pit Redevelopment Project.

Greenspace Proposal Summary

The Greenspace proposal is to utilize USEPA funding for Phase I and II Environmental Site Assessments and Remedial Planning for the 80-acre former sand mine called the J-Pit. When the sand was removed from the pit area over 20 years ago, the site was then approved by the State of Indiana as a potential site for a sanitary landfill. The permit to design the site as a landfill expired in 1979. New owner Waste Management challenged the State determination on the status of the pit and continued to plan for the development of a landfill until 1998. Waste Management turned the J-Pit and surrounding properties over to the City of Gary in the fall of 1999 as part of the settlement of a lawsuit filed by the city.

The site is at the center of the proposed light industrial/Commercial Complex conceptual design for future use of the area. Potential sources of contamination exist surrounding the pit including a former junkyard and illegal dumping sites. The potential exists for infiltration of contaminated groundwater into the pit. Remedial Planning must include protection and facilitation of future natural resource uses. The Lake County Soil and Water Conservation District will provide review and technical assistance for the Greenspace Project. Public information and decision-making will occur through the Community Involvement Plan and the J-Pit Brownfield Community Work Group designed for the comprehensive J-Pit Redevelopment Project.

The proposed restoration and enhanced plan for the J-Pit itself is to allow the pit to fill with water from groundwater inflow and then restore the banks of the lake through natural plantings and constructed wetlands. A trail for biking and walking will be constructed around the lake and natural resource and historical interpretative displays will be incorporated into the trail. The trail will be designed to connect with a new city Park being developed adjacent to the south end of the J-Pit Redevelopment Project.

BUDGET

Environmental Consultant Proposed Cost - $170,000

- Phase I Environmental Site Assessment
  Collect and review all historical material and testing information on the area and adjacent properties; Inspect the site and any buildings and structures; Review concept plans for the site; Provide technical document. Proposed Cost - $ 32,000

- Phase II Environmental Site Assessment
  Collect, test, and evaluate soil and other samples to determine environmental contamination; Provide technical document. Proposed Cost - $ 93,000

- Remediation Plan
  Develop remediation and mitigation plan for identified reuse, including any institutional and engineering control recommendations. Develop alternatives, if appropriate; Identify any potential need for the installation of any monitoring devices; Identify financial and other resources necessary for cleanup scenarios based on potential reuse (cost projections);
  Identify funding strategies for cleanup;
  Provide technical document. Proposed Cost - $ 45,000

Independent Consultant and Facilitator Proposed Cost - $ 30,000

- Community Outreach activities
  Publicize the pilot project and community planning process; Promote and solicit community participation by attracting residents to meetings and forums; Train select city staff and residents to assist with facilitation at meetings/forums; Facilitate meetings;
  Gather data and information regarding residents environmental concerns, collect and share information, and review redevelopment scenarios; Work with and use the Environmental Justice Resource Center at Indiana University Northwest, as needed.

- Technical Consultant
  Serve as the community's environmental consultant and technical assistant; Act as an environmental advocate for residents of the area by translating technical information into terms easily understood by residents; Help residents understand the technical information and make informed decisions about environmental issues, risks and potential re)development; Help disseminate environmental and other related information to residents and groups.

Greenspace Proposed Cost - $ 50,000
(The tasks are the same as described above.)

- Phase I Environmental Site Assessment Proposed Cost - $ 12,000

- Phase II Environmental Site Assessment Proposed Cost - $ 28,000

- Remediation Plan Proposed Cost - $ 10,000

EVALUATION CRITERIA

1. Problem Statement and Needs Assessment

Effect of Brownfields on your Community or Communities

Definition of Community - In the expansion years (1910 -1940), there were two cities of Gary, each offering a different way of life and a degree of sectionalism. The northern district, built by the Gary Land Company was closely supervised and regulated. Good housing conditions, improved streets, sewers, gas and water mains characterized the area. The southern district, the "Patch" area, had all the characteristics of a typical boomtown, especially overcrowded living conditions. The professional, managerial and skilled population segment lived on the north side. The south side housed low paid, unskilled workers, mainly immigrants from southern and eastern Europe.

When WWI began, the flow of immigrants from southern and Eastern Europe ceased while at the same time, demand for labor in the steel mills and related industries increased. After WWI, a series of immigration acts were passed by Congress which made it more difficult for European immigrants to enter America. These new immigration laws affected the supply of ready labor, workmen had to be recruited from other areas, and the principal new source of labor was that of southern Blacks.

During WWII and the post war years, Gary started to experience the beginning of economic decline (1940-1965). Although the mills operated at almost peak employment, Gary Works, now approaching fifty years old, was becoming technologically obsolete causing increased production costs and becoming less competitive in world markets. Starting in the 1950's, Gary's upwardly mobile white population started to leave the city for new housing in the neighboring suburbs. Year after year, the level of Gary-based retail sales dropped off as middle-income residents departed for new suburban locations. By the late 1960's, retail sales in Gary were made almost exclusively to local Black residents. Gary's decline was not unique, rather it was typical of central cities throughout the nation during this period.

Between 1980 and 1990, the civilian labor force in northwestern Indiana declined by 9.7% or 33,760 workers. The area lost 42.7% or 51,800 of its total jobs in the manufacturing sector, the majority of which were steel mill jobs. Between 1980 and 1990, non-manufacturing employment rose from 60% of total employment to 75%.

Between 1960 and 1990, Gary's population declined from 178,320 to 116,646. Today, 89% Gary's residents are people of color. Approximately 25% of the population live below the poverty level. With an unemployment rate almost 2 times higher than the state average, the youth of Gary are offered little promise of employment or opportunities for advancement in their hometown.

Impact of Brownfields

Due to the downsizing, and subsequent closing and moving of business and industry, the city of Gary has inherited an enormous inventory of abandoned and underutilized buildings and vacant properties. The majority of brownfield sites are located in the northern half of the city adjacent to Lake Michigan, the Gary/Chicago Airport, major expressways, and rail lines. The loss of tax and reinvestment dollars has been critical.

The clean up and redevelopment of these brownfields has been recognized as a key factor in the revitalization of Gary and the old industrial cities of Northwest Indiana. In 1996, the Northwest Indiana Brownfield Redevelopment Project, Inc.(NIBRP), received a $200,000. EPA Brownfield Pilot grant and a $200,000 match from the State of Indiana to begin an inventory of brownfields in Gary, Hammond, and East Chicago, Indiana and to select, assess, and promote redevelopment of a pilot brownfield redevelopment site in each city. The City of Gary and local brownfield redevelopment partners have identified additional brownfield redevelopment opportunities based on market potential and protection of community health and environment. In partnership with the Majestic Star Casino, the City of Gary will be embarking on a multimillion dollar clean up and redevelopment project on former industrial land on Gary's Lake Michigan Shoreline. Over 1 million dollars of funding has been secured from the state Build Indiana Fund to assist in remediation costs for this project. The Gary Urban Enterprise Association (GUEA) has recently completed a one million dollar acquisition and clean up project on a former steel products plant within the Enterprise Zone.

Despite these initial efforts, there remain hundreds of properties in Gary to be inventoried, assessed, acquired, cleaned up, assembled, and marketed. To this end, Gary has developed a targeted approach to inventory and assessment, which this demonstration pilot will build upon.

Because of an increase in airline usage and expansion plans at the Gary Chicago Airport there is a very real and time sensitive need to assess, clean up, and redevelop property in the Airport Development Zone (ADZ). The ADZ was established by state statute in 1994 and contains approximately 8,200 acres surrounding the Gary Chicago Airport. The properties in the ADZ represent a mix of commercial, industrial, residential, recreational, and natural area uses. The ADZ offers the same benefits and incentives as the Urban Enterprise Zone. These include a variety of tax abatement and wage and tax credits. The City of Gary is targeting brownfield inventory and assessment in the ADZ in order to assist in providing develop able sites for warehousing and other airport related business.

The immensity of the ADZ and the large number of potentially contaminated sites required a partnership effort in the assessment and redevelopment process. In 1998, the City of Gary, the Gary Chicago Airport, and the Airport Development Zone Board, along with NIBRP, applied for and received a $50,000.Brownfields Site Assessment Grant for the ADZ from the Indiana Finance Authority (IDFA). A match of $100,000. was committed by the project partners. An additional $20,000. grant was requested and approved in 1999 from IDFA for assistance with the inventory database for the ADZ and to begin an inventory of sites in the newly designated Empowerment Zone.

The goal of the city and its partners for the ongoing ADZ Inventory and Site Assessment Project is to inventory 800 brownfield properties in the Zone and do Phase I and Phase II Environmental assessments on prioritized properties in the ADZ and the Empowerment Zone. The inventories are being entered into a brownfield database created for this purpose which will be transferred to a GIS system under development by the city in the year 2000.

How this Proposal is Distinct from Others

The J-Pit Redevelopment Project was selected for this Pilot Demonstration for 3 important reasons:
1) The 200 acre property was acquired by the city in fall of 1999.
2) It is located in the Airport Development Zone adjacent to residential neighborhoods and offers a real opportunity to bring in appropriate business and recreational opportunities for airport business development and community revitalization.
3) Some of the site properties are considered an environmental risk to the surrounding community.

The focus area for this proposal is known as the J-Pit, a former sand mine and adjacent properties located on 200 acres in the Gary Airport Development Zone (ADZ). These properties had previously been targeted for the development of a regional solid waste landfill by Waste Management. The city administration and local residents were opposed to this development due to its location in Gary near homes and schools. After a protracted legal battle, the J-Pit and adjacent land holdings were signed over to the city of Gary in the fall of 1999.

The J-Pit properties are vacant at this time but a large auto junkyard was located at the southeast corner for many years. The Redevelopment Commission of the City of Gary now holds title to all of the J-Pit properties. For assessment purposes the site is divided according to proposed future use: the approximately 80 acre J-Pit itself, which is the focus area for the Greenspace grant, and the 120 acres of properties surrounding the J-Pit. There are residences and commercial sites within 1 block of the J-Pit properties. The J-Pit Redevelopment site is easily accessible from three major highway interchanges, I80/94, Highway 912 (Cline) and the Indiana Toll Road.

Due to past uses including, auto junkyards and illegal dumping, environmental and public health and safety concerns have long been associated with some properties in this area. Private water wells are utilized in the surrounding area and residents are concerned about groundwater contamination.

The City Planning Department has already prepared a conceptual plan for the development of a commercial industrial park flanked by natural resource and recreation areas at the J-Pit site. A new city park is also in the design stage on an adjacent property. The plan to develop an industrial/commercial complex and recreation/natural areas will provide jobs, environmental clean up and protection, neighborhood revitalization, and improved quality of life for local residents.

Value Added by Federal Support

The USEPA funding and other assistance provided through this grant will be used to carry out this pilot project in three major ways:
(1) Complete all Phase I & II Environmental Site Assessments, characterization, and remediation plans for the pilot;

(2) Provide the foundation work for the redevelopment of the pilot which includes preventing and/or correcting any actual or threatened release of any hazardous substance or pollutant, and;
(3) Ensure meaningful community involvement through an independently facilitated Community Involvement Plan. We will assure through the Community Involvement Plan that anyone who wants to participate in the process does and that everyone has a chance to receive information and provide input.

Gary is working with USEPA and the Indiana Department of Environmental Management on several projects that are related to the Pilot area and that have already produced benefits and support for this project.

- The Environmental Affairs Department received a two year $55,000. EPA funded Illegal Dumping Prevention grant which will end in December 2000. Black Oak and Gary West Side residents have worked with federal and state agencies, city staff, and the local COP police officers to design a pilot project to stop illegal dumping in their neighborhoods through prevention and monitoring programs, education, and stepped up enforcement and conviction. The target area to stop illegal dumping is Brownfield Pilot J-Pit area. Ongoing citizen oversight and involvement in the program is accomplished through monthly meetings of the Black Oak Community Development Corporation and the local chapter of Community Oriented Policing.
- The EPA funded Great Lakes Environmental Finance Center of the College of Urban Affairs at Cleveland State University prepared a Brownfield Redevelopment Strategy document for Gary following a June 1999 workshop. City staff and brownfield stakeholders discussed overcoming barriers to brownfield redevelopment and financing basics. Recommendations from the resulting strategy report have been utilized in the city's brownfield assessment and inventory project.
- Gary is presently a partner in the EPA Landfill Methane Outreach Program and is receiving technical assistance from EPA to utilize the methane produced by the closed Gary Landfill for a gas to energy project. The closed Landfill is adjacent to the J-Pit Redevelopment Project.
- Gary and the Gary Chicago Airport have developed a working relationship with EPA Region 5 in regard to the development of the Gary Chicago Airport and environmental issues in the ADZ. In 1999 the Airport Environmental Workgroup facilitated by the city met monthly to address environmental issues relating to airport development in a proactive and cooperative manner.
- Gary, EPA, and the PRP group from two superfund sites in the ADZ are working to develop a final remedy for two ADZ superfund sites that will allow for appropriate re-use and protection of human health and the environment.

The J-Pit Redevelopment Project has the potential to bring additional resources and support for addressing brownfield issues in the City of Gary. Successful assessment and clean up of brownfields in the ADZ will attract developers and partners to the city. The comprehensive and community oriented approach to the J-Pit Pilot Site will provide an excellent example to the Gary Urban Enterprise Association which is developing a Strategic Plan for a portion of the ADZ called the Cline Avenue Corridor located immediately to the north of the J-Pit. The J-Pit Pilot Site and the Cline Avenue Corridor are the primary brownfield areas targeted for commercial and light industrial development linked to the expansion of the Gary Chicago Airport. Clean and reusable properties in the ADZ will further support the expansion and development of the airport which will bring jobs and revitalization to the entire city.

We believe that a successful grant application will go far in convincing residents and our brownfield partners that the city is serious about the redevelopment of brownfields and that there is a commitment to redevelop the J-Pit from a community liability to a community opportunity. In addition, we will work with Ivy Tech and area residents to insure that job training and apprenticeship opportunities are offered to the residents that are impacted the most by the location of the pilot site. Jobs, job training, and the potential funding support that can be requested to support community training opportunities will be value added to this pilot project.

Cooperation and assistance from EPA and the IDEM in regards to the establishment of clean up standards based on future uses and relief of liability to innocent third parties will go far in providing a higher comfort level to developers interested in the ADZ . The support of the EPA both from a funding and a technical advisory capacity will show the public that the federal government is willing to play the role of facilitator to brownfield clean up and re-use in Gary.

2. Community-Based Planning and Involvement

Citywide - Over the past two years, the City of Gary has conducted a variety of community based planning and involvement strategies both citywide and for targeted development projects. The Waterfront and Downtown revitalization Plan has involved hundreds of residents beginning with assessment and goal setting and continuing with implementation which is now underway in the year 2000. The Empowerment Zone application process was conducted citywide with citizen participation and input. The resulting plan was developed out of a community visioning process with specific projects and programs to address job creation, business

development, neighborhood revitalization and clean up, brownfield redevelopment, and natural resource protection and enhancement. A Coordinating Council made up of local residents, agencies, and organizations is guiding the Empowerment Zone implementation in the three cities.

Gary's targeted Brownfield Strategy has developed out of the need to prioritize development areas and potential public health threats within the context of the hundreds of brownfield sites located throughout the city. Working with the public, the three city Northwest Indiana Brownfield Redevelopment Project, and the Urban Enterprise Association, city staff and planners have targeted the Airport Development Zone and the Empowerment Zone for the first stage of inventory and assessment, clean up and redevelopment. The Indiana Development Finance Authority (IDFA) is funding the first phase of inventory and assessment in the ADZ through their Brownfields Site Assessment Grant Program. EPA and IDEM have also assisted Gary in providing assessment and technical assistance through their respective brownfield programs. The ADZ Site Assessment Project has completed over 25 Phase I Environmental Site Assessments and is preparing a request for another 25. A database project is underway to inventory 800 sites in the ADZ and the Empowerment Zone.

Residents in the Airport Development Zone near the Pilot Site have been among the most active in the city, voicing their concerns and advocacy for their neighborhoods through the public meetings associated with the formation of the ADZ, airport expansion, the closure of the Gary Landfill, and most recently in partnership programs for environmental clean up projects and future development planning.

Black Oak & West Side Communities impacted by J-Pit Pilot Site – Gary residents living on the city's far west side, in the shadow of the now closed Gary Landfill, have developed a strong interest in their environment and an equally strong interest in building a new future for their neighborhoods. Gary's landfill operated for 30 years in close proximity to homes and schools. People had concerns and fears for the majority of those years regarding the potential health impacts of living near the landfill. In the last two years, the city has worked closely with these residents during the landfill closure. Many public meetings, large and small, were held to answer questions and to discuss and review the final closure plan and its implementation. The residents' greatest enthusiasm was reserved for the discussions for future community development now that the landfill is closed.

The Black Oak neighborhood was annexed and became part of the city of Gary in 1975. This neighborhood has felt the pressures of sporadic development and economic decline that has led to job loss, population decline, and environmental issues related to the former city landfill, waste handling enterprises, and illegal dumping. The racial composition of this neighborhood is majority white. 25 % of Black Oak residents' income is below poverty level.

The West Side neighborhood of Gary closest to the J-Pit is primarily a residential neighborhood built up in the 1950's and 60's. There is mixed single family housing as well as a subsidized housing development and a large public housing authority complex. An elementary school and high school are within 1 mile of the J-Pit. Income is middle to poverty level and the racial composition is majority African American. 25% of West Side residents' income is below the poverty level.

When the city gained ownership of the J-Pit properties in the fall of 1999, the city Planning Department immediately began working with area residents to develop a conceptual plan for the approximately 200 acre site. The city Park Department is also working with the community on a design for a new city park and nature interpretive area adjacent to the J-Pit site.

Now there is hope for the future and a neighborhood renewal that clean up and development can bring to this area once known best for waste disposal and associated illegal dumping. The development of the J-Pit as a light industrial park and nature resource area is a dream come true to residents who feared they would be fighting another landfill if previous owners Waste Management had been able to proceed with their plans.

City department staff have an ongoing relationship to Black Oak and West Side neighbors in the J-Pit area. The city Environmental Affairs Dept. is working with residents of these communities on a $55,000. EPA funded Illegal Dumping Prevention Project. Residents have worked with federal and state agencies, city staff, and the local COP (Community Oriented Police) officers to design a pilot project to stop illegal dumpers through prevention and monitoring programs, education, enforcement and conviction.

Because of the many environmental concerns raised by J-Pit area residents, city staff and local residents have also been working with the Indiana Department of Environmental Management , the State Health Department, and the area water utility to respond to

residents request for assistance. IDEM tested 5 resident's water wells and the State Health Department conducted a health survey to determine if there are local health impacts due to water quality. The limited surveys and testing have not found evidence of well contamination but until residents have more information and verification they will continue to have concerns.

The environmental assessment and remedial planning provided by the pilot grant will contribute to resident understanding and information regarding groundwater quality in the J-Pit area. Assessment and any required clean up will provide a comfort level for residents in relation to their own properties and the safety of future development at the J-Pit site.

Community Involvement Plan

In order to better communicate and coordinate assessment and planning activities for the J-Pit Redevelopment Pilot Project, the city will set up a J-Pit Brownfield Community Work Group that will include city departments, state and federal agencies, area residents, area school representatives, interested organizations, and area business representatives.

- The city will hire a qualified facilitator or firm that has experience in communicating environmental information to communities to assist the city with public meetings, outreach activities and information, evaluation and documentation.
- The city will inform the public regarding the project and invite participation through the local media, through community mailings, and through community meetings and organizations. The city Environmental will design and produce a quarterly newsletter on the J-Pit Pilot Project activities for public dissemination.
- During the two year course of the J-Pit Pilot Project, the city will hold a minimum of 8 facilitated public meetings of the J-Pit Brownfield Work Group. The meetings will be video taped for the public access channel and shown for public viewing.
- Public information and involvement will also occur through city staff presentations and feed back sessions at community group meetings such as CDCs, Block Clubs, and School and Church groups. Public feedback and recommendations will be solicited on a continuing basis and participation process changes made on the basis of public response and suggestions.
- All aspects of the site assessment and remedial planning and implementation process will be shared with the public through the J-Pit Brownfield Community Work Group. Public input will be documented and the public will be involved in the decision-making process. Questions regarding contaminants and contaminant levels will be answered and technical assistance will be requested from IDEM and EPA. The environmental consultant conducting the site assessments and preparing the remedial plans will be available for public questions and clarification. If further assistance is needed, the city will make efforts to provide additional technical assistance for public information purposes.
- The project will be evaluated and documented with the assistance of the public facilitator and the information made available in public respositories.

The following groups are presently working on brownfield redevelopment in Gary and will partner with and support the J-Pit Brownfield Redevelopment Project by participating in the J-Pit Brownfield Community Work Group:

• The City Brownfield Team consists of staff representatives of Environmental Affairs, Planning, Economic Development, and Redevelopment Departments. City internal coordination and brownfield project oversight. Contact: Mary Mulligan, Brownfield Specialist - 219/882-3000.

• Black Oak Redevelopment Corporation is a community based community development corporation (CDC) which has grown out of a well organized and long standing community advocacy group located in the Black Oak neighborhood. The group is organized around economic development and housing as well as quality of life issues. Contact Marge Elea, President – 219/989-9159.

• Gary Chicago Airport – The Gary Chicago Airport Board supported the original ADZ environmental site assessment project with a $50,000. match for the Indiana Finance Authority grant and will support and participate in this project. Contact William Staehle, Airport Administrator – 219/949-9722.

• Gary Urban Enterprise Association (GUEA) – The GUEA is a not for profit organization responsible for the development of the Gary's Urban Enterprise Zone. The GUEA also manages the ADZ on behalf of the Gary Chicago Airport. The GUEA contributed a $50,000. Match to the ADZ assessment project. Contact Jujuana Meeks, Executive Director, 219/939-9663.

• Lake County Soil and Water Conservation District(LCSWCD) – LCSWCD will provide staff technical assistance and review for the Greenspace portion of the J-Pit Pilot Project. Contact Sue Gerlock, Conservation Specialist – 219/663-0588 Ext.3.

- The Northwest Indiana Brownfield Redevelopment Project, Inc. (NIBRP) – NIBRP is a not-for-profit brownfield organization set

up to help coordinate and promote brownfield remediation and redevelopment activities in Gary, Hammond, and East Chicago, Indiana. NIBRP staff and board will participate and provide technical assistance to the J-Pit Brownfield Pilot Project. Contact Carol-Ann Seaton, Executive Director, 219/397-5905.

• The Grand Cal Task Force – The Task Force is a local community based environmental organization and will provide technical assistance and outreach for assessment, remedial planning, and pollution prevention project activities. Contact Bowden Quinn, Executive Director – 219/473-4246.

• Indiana Department of Environmental Management (IDEM) – IDEM will continue its partnership with the city in support of the assessment and clean up of brownfield sites. Contact Dana Reed Wise, Chief, Brownfields and Site Investigation Programs – 317/232-8603.

• Indiana University NW Environmental Justice Project – This project is a result of funding through a USEPA Environmental Justice Community University Partnership. The Environmental Justice Project will work with the J-Pit Brownfield Community Work Group as a resource for the environmental justice community. Contact Earl R. Jones, PhD. – 219/980-6629.

• Gary Chamber of Commerce - The Gary Chamber of Commerce represents local business and will work with this Pilot Project and provide support and assistance. Contact Jeff Williams, Executive Director – 219/885-7407.

• Ivy Tech State College Northwest – Ivy Tech will work with the Pilot Project to assist in the development of associated job training and
Apprenticeship programs. Contact Arlene Pearson, Business Coordinator – 219/981-1111.

Workforce Development Services – Workforce Development will work with the City to develop job training and apprenticeship programs associated with the J-Pit Redevelopment Project. Contact Denise Dillard, Center Director – 219/981-4100.

Additionally, the following groups will be asked to participate in the project and the J-Pit Brownfield Community Work Group:
• Black Oak Community Oriented Policing (COP) Program
• Concord Commons Tenant Organization
• West Side High School
• Ivanhoe Elementary School
• Gary Common Council Representative
• Calumet Project for Industrial Jobs
• USEPA Region 5

Environmental Justice Plan
When EPA Region 5 held its Environmental Justice Workshop in Gary in 1998, community participants emphasized the need to find solutions to the environmental problems facing the residents living in the area around the J-Pit. The residential neighborhoods in the J-Pit area have been negatively impacted by the former Gary Landfill, superfund sites, and continued illegal dumping activity. There is a high percentage of people of color and low income residents in the impacted community. This Pilot Project will provide economic and environmental benefits to the surrounding environmental justice communities.

The Environmental Affairs Department has worked the minority and low-income residents of the Airport Development Zone to provide information and decision-making opportunities in the closure and post closure management of the Gary Landfill. We have further developed an illegal dumping prevention project with the Black Oak and West Side community residents which reflects their input for program design and implementation. This is very much an environmental justice project in that community members are carrying out a program they have designed with funding assistance from an EPA grant which will result in measurable improvements to both the image and the safety and health of the community.

The city and any consultants involved in the J-Pit Pilot Project will ensure that there is a community understanding of all aspects of the project, site assessments and results, remediation plans, end use and development plans, so that informed participation can occur. Efforts will be made to connect with the environmental justice community members who may not normally utilize the news media or participate in planning meetings. In neighborhoods immediately adjacent to the J-Pit Pilot Site the J-Pit Brownfield Community Workgroup will organize door-to-door information distribution and feedback surveys.

As we carry out the J-Pit Redevelopment Project, the City of Gary Brownfield Program and Environmental Affairs Department will build on our previous and ongoing outreach to low income, people of color, and other disadvantaged communities. Residents in the ADZ have told us they want new business and jobs to come into their area where they can walk and bus to work. They need training assistance to prepare them for the work that new business development will bring. They want to change the image of their area by creating both economic vitality and quality of life improvements. We will work with the impacted community to incorporate their goals into the J-Pit Redevelopment Pilot Project. The participation of the local community in determining clean up standards, remedial solutions, and future development will insure that environmental risks are not increased as a result of redevelopment.

The expansion of the Gary Chicago Airport and the resulting business development and job expansion that will occur in the Airport Development Zone will benefit not only residents of the ADZ but the entire city of Gary. Development of the J-Pit as a clean and sustainable economic enterprise with the added benefits of natural resource restoration and preservation will provide an example of community based planning and development which can serve as a model for development projects in the city and region wide.

3. Implementation Planning

Government Support

The city is responsible for the administration of civil affairs on behalf of the residents. As such, the city has the power and authority to carry out this project and fully supports this project. The city of Gary owns the J-Pit and adjacent properties.

Any remaining parcels that need to be included in this project will be incorporated through public-private partnership initiatives.

Once all assessments and site characterization has been completed and the remediation plan has been developed, the city will begin marketing the site to developers. The city will strongly recommend that developers apply to enter the Indiana Voluntary Remediation Program. The city hopes to partner with developers by initiating the application process.

However, in the case where the city retains ownership of the property, all or part, we aim to apply to enter the Indiana Voluntary Remediation Program. Please note that the costs associated with participating in this program can be staggering especially for those municipalities and/or owners that have a large number of Brownfield properties and/or very limited financial resources. The costs associated with participating in this program can prohibit the participation of those communities and entities that would benefit the most from participating in the program.

Site Selection and Environmental Site Assessment Plan

The selection of the project site was made based on public interest, opportunities for economic development, the need for environmental improvements, and infrastructure enhancements. The site, and area in general, is part of a broader (re)development initiative that will be supported and advanced by this project.

The Environmental Site Assessments will be used to develop a development strategy that will address:

- the health and safety of neighbors and community-at-large after development
- the health and safety of future site users
- site workers health and safety issues
- protection of drinking water sources
- integrating on-site and work-related pollution prevention strategies
- protection from preexisting contamination liability issues
- possible funding for remediation from potentially responsible parties

To accomplish thorough and cost-effective site assessments, characterization and remediation planning for the pilot site, credible and qualified consultants will be used. The Brownfields staff and Brownfields Team will monitor and approve all environmental work tasks. If the Indiana Voluntary Remediation Program is used, all Phase II Environmental Site Assessment and remediation planning work tasks will have IDEM oversight.

Reuse Planning and Proposed Cleanup Funding Mechanisms
In most cases, the costs for cleanup of Brownfield properties exceed the value of the real property. As such, obtaining funds for cleanup of Brownfields is likely to require an unusual level of risk-taking through innovative programs which are oriented for long-term investment and pay-back. Such financing will need to be tied to redevelopment efforts that are based on plans that consider engineering and institutional controls, where appropriate, to maximize resources and efficiently estimate remediation costs based on the future use of the property and overall environmental health impacts to the community. The development of a funding strategy and plan for future redevelopment is part of the work program for this project. All plans to reuse the site will be consistent with plans to redevelop the Airport Development Zone.

There are a number of funding sources that will be targeted for the pilot site:

- Potentially responsible parties, if applicable
- Indiana Development Finance Authority Grants & Low-Interest Loans
- State and U.S. EPA Revolving Loan Funds
- Indiana Department of Commerce
- State tax credits
- Section 108 Loan Guarantees
- Brownfields Economic Development Initiative
- Federal Home Loan Bank System
- Transportation Funds
- U. S. Department of Commerce/Economic Development Administration
- CRA lending
- Insurance cost-recovery
- Build Indiana Funds

As the redevelopment process unfolds, other potential funding options may surface.

Flow of Ownership Plan
Currently the City of Gary is the owner of the J-Pit and most of the adjacent property. Our strategy will be for the city to transfer ownership by either selling and/or leasing the property in its entirety or portions thereof to an approved developer or end user. After site assessments and the creation of a development plan that addresses remediation, funding, types of end use, and hopefully, a developer and/or end user, we plan to proceed with the transfer of ownership.

The on-going concern over environmental liability is a major deterrent to private sector investment. If the concern over liability cannot be completely resolved to the satisfaction of the prospective developer, owner, and/or end users, then it is likely that the city will maintain ownership of the property. The city will then enter into long-term lease agreements with the end user(s). Private investment will take the form of lease-hold improvement loans. Depending on the scope of these investments, it may be necessary to secure these loans with other resources of the city or other public resources or agreements.

In summary, we are faced with two (2) options. One option is for the city to retain title to the property until remediation is completed and then directly transfer the title to a new owner or end user(s). The other option is to sell the property to a developer or end user once the nature and extent of any contamination is confirmed through site assessments.

4. Long-Term Benefits and Sustainability

Long-Term Benefits
Major benefits from this project will be local economic development and protection of health and environment. Jobs will be created that are accessible via walking, as well as by bus transportation. The image of the entire area will be greatly improved and massive revitalization will have taken place. The combination of natural resource restoration and enhancement will not only benefit the surrounding community, but will provide an example for other urban

redevelopment projects in the city and the entire region.

The opportunity to utilize this once damaged landscape for recreation and natural resource restoration also provides the community with healthful and educational activities within their own community and will in all likelihood draw other visitors to the area.

Once the environmental risks and threats associated with the property have been eradicated lenders will become more supportive in making Brownfields and Brownfields-related investments in this area as well as throughout the city.

Further, this project will evaluate the formation of a community or neighborhood-based committee or work group to participate in the Brownfields redevelopment process on a site-by-site basis. Information and technical expertise will be provided to the committee or work group. This approach will provide greater likelihood of success in the creation and acceptance of a site development plan or site development options. In addition, the redevelopment process will consider health and safety (risk) factors as well as site considerations, neighborhood concerns and issues, and economic considerations to ensure that the development plan implemented will be an approach that is safe and satisfies all the different constituencies involved, and has the best chance of success. We will document our successes, and stumbling blocks, with this approach so this project can serve as a model.

Sustainable Reuse

Through the J-Pit Brownfields Communitiy Work Group discussions and recommendations, we will consider the sustainable elements of this project such as natural resource restoration, recreation, education, job training, and clean business development. We will further develop at 'Brownfields Prevention" Program (see below) and research the possibility of using landfill gas to energy generation to power J-Pit Redevelopment Project businesses. A sustainable check list will be developed for the Pilot Project which will include built in sustainable features and recommendations for future development.

A major goal of the project as it relates to sustainable reuse or development is to make sure that new Brownfield sites are not created nor recreated at the project site. The J-Pit Brownfields Community Work Group will work with Airport Development Zone business and residents to develop a "Brownfields Prevention" policy and guidelines. The "Brownfields Prevention" policy and guidelines will be shared with local businesses such as auto repair, dry cleaners, paint shops, truck barns, and recycling yards. A voluntary agreement will be developed for businesses to sign on as a supporter and participant in the program. A concerted effort will be made to establish the Airport Development Zone as a Pollution Prevention Zone for government, business, and residents. New businesses recruited to the J-Pit Redevelopment Project will be asked to sign on to the Pollution Prevention Agreement.

The program will also build and expand on the pollution prevention outreach efforts of the Grand Calumet Task Force, a local environmental organization. The city will partner with the Grand Calumet Task Force for continued pollution prevention technical assistance and training. The city will further use, where possible, the resources of the Indiana Department of Environmental Management and U. S. Environmental Protection Agency Region V for workshops, training, and technical assistance for municipal departments, local businesses, and residents.

The city will coordinate with the Environmental Justice Resource Center at Indiana University Northwest to assist in promoting the Pollution Prevention program through its community outreach efforts and web site, and maintain pollution prevention information, as well as, project documentation in its Environmental Justice library.

In addition, it is our hope that an array of community involvement and service projects come out of this initiative. Initiatives such as school recycling and environmental health programs, youth-oriented natural resource and environmental education activities, college internships, and involvement by other organizations of interest.

Measures of Success

Further, investigating, cleaning up, and returning unproductive land to our tax rolls and providing jobs is a direct benefit of Brownfield redevelopment. We need jobs that are suited to our residents and located close to their homes.

The city also needs the revenues generated by the jobs to provide services. Additionally, we believe that by establishing a productive use for these sites, property conditions and values in the surrounding area will also dramatically improve.

SUCCESSES:

- number of jobs for local residents
- education and training opportunities
- new tax revenues
- new and improved infrastructure
- number of acres assessed, remediated and redeveloped
- Natural Resource areas restored and enhanced
- Recreation and Education Opportunites created
- Successful model for sustainable urban redevelopment

Since our goals for the project are (1) to complete site assessments and develop a remediation plan for the pilots and (2) to facilitate community participation and provide technical assistance, our measures of success is readily attainable. We will have met our Brownfields pilot goals when we have (1) knowledge about the site provided by the Phase I & II Environmental Site Assessments, (2) a plan to address remediation options, (3) broad community support for the project, and (4) a commitment to see the site redeveloped by the partners and supporters of the project.

We will provide U. S. EPA a summary report and evaluation that reflects the activities and outcomes of the pilot projects and site development plans upon completion.

EVALUATION CRITERIA (PART II)
5. Greenspace

Authority and Context

Local Conservation Agency - The primary agency that will be working with the City of Gary Brownfield Team on the J-Pit Brownfield Redevelopment Project will be the Lake County Soil and Water Conservation District and their partner agencies, the Indiana Department of Natural Resources, and the Natural Resource Conservation Service. These agencies have worked with city departments in the past to do natural resource restoration and water protection projects. Specifically the city has worked with the LCSWCD to restore dunes on the city owned lakeshore, and to implement surface water runoff management programs on the Grand Calumet River and Lagoons in Gary. Most recently, the city requested and received technical assistance on the management of sand and dune grass on the closed Gary Sanitary Landfill. The Lake County Soil and Water Conservation District will provide technical assistance and oversight for the J-Pit Brownfield Project environmental assessment and remedial plan with respect to natural resource impacts and future natural resource and recreational uses of the area.

Existing Open Space/Greenspace Plans -The City of Gary is in the process of developing an inventory of greenspace in the city for the purposes of comprehensive planning for parks, preservation, mitigation, and resource management. Several properties under consideration for preservation are within targeted economic development areas of the city. Many of the greenspace properties are considered brownfield sites. The city will develop plans, as is being done with the J-Pit Redevelopment Project, that incorporate natural resource preservation and enhancement with economic development planning.

Relationship to Part I - The J-Pit sits at the center of the properties described as the J-Pit Redevelopment Project in Part I of this proposal. The city Planning Department is developing a conceptual plan for the properties and plans to proceed with finalizing the plans and seeking development partners after the initial assessment and clean up of the site. The Economic Development Department will take the lead in marketing the business and commercial properties to private partners.

Community Involvement
The city is already working with residents in the surrounding community to develop a future vision and plans for the J-Pit area. Because the actual J-Pit is located at the center of the redevelopment project, the Greenspace Project will be incorporated into the Community Involvement Plan to be carried out by the J-Pit Brownfield Community Workgroup described in Part I.

Residents in the surrounding communities have not had the opportunity to access or learn about their natural environment or the benefits of preservation and enhancement. As a part of the community involvement plan, residents will be invited to tour the J-Pit site and learn about the natural habitat. As residents are asked to consider the remedial plan design, there will be discussion of how remedial design can complement the future natural resource uses.

Community residents will be asked to consider how they would like to be able to utilize the natural resource aspects of the site. Final site design and development will take into account the residents input and concerns. Presentations on the project will be made to local school classes and assemblies and schools and students will be asked to contribute visions for design and future uses of the site.

The benefits of the project to low income and people of color communities will be information and participation in decision making, environmental clean up, recreational opportunities, opportunities for natural resource education and appreciation, and community revitalization.

Site Identification
This J-Pit was selected because the property has recently been acquired by the city and it has also been the focus of community residents' interest and concern for many years. It is the centerpiece of the light industrial complex and enhanced natural area that is proposed for this area. The J-Pit is a former sand mine approximately 80 acres in size. It is 35 ft deep with sloped sides. There is a drainage ditch system in the pit to capture groundwater inflow and a pump which transports excess water to the Little Calumet River. It is directly adjacent to a former auto junkyard that is suspected of contaminating the soil and possibly groundwater. The J-Pit is across the street from the closed Gary Landfill and is protected from possible contamination by a clay dike at the east end of the pit.

Local residents have indicated support for business and natural resource development of the J-Pit area in community development planning meetings. Community residents further want to see assessment and clean up of contaminated properties at the J-Pit site.

Site Assessment Plan

- Phase I and II Environmental Site Assessments will be conducted on the J-Pit by qualified environmental professionals utilizing the EPA Brownfield Greenspace grant funds.

- The public will review the site assessment results as they become available. Discussions and decisions will occur at the J-Pit Brownfield Community Work Group meetings. We will request technical assistance from the Indiana Department of Environmental Management, the Environmental Protection Agency, and the Lake County Soil and Water Conservation District in the review and interpretation of the site assessments.

- The city and the J-Pit Brownfield Community Workgroup, our environmental consultants, and the above mentioned environmental and conservation agencies, will work together to devise a remedial plan for the J-Pit that is based on the proposed future natural resource uses.

Additional potential site assessment funding may be available through matching funds contributed to the original ADZ Brownfield Site Assessment Project. However, it is estimated that additional Phase I site assessments adjacent to the Gary Chicago Airport, and Phase II site assessments on priority properties adjacent to the airport will require all of the remainder of those funds.

Flow of Ownership
The 200 acres of the J-Pit Redevelopment Area were turned over to the city in the fall of 1999 by previous owner Waste Management to settle a lawsuit filed by the city. The J-Pit itself is presently fenced and gates padlocked. Public access is denied. Security and property management is under authority of the Redevelopment Commission of the City of Gary which holds title to the property. Based future partnership agreements, the management and maintenance of the natural resource area of the J-Pit Redevelopment Project will either be retained by the city or given over to the responsibility of future site owners.

Reuse Planning
The proposed restoration and redevelopment design would allow the J-Pit to become a lake fed by groundwater and surrounded with natural plantings and possibly constructed wetlands. A walking and biking trail is planned to be constructed around the lake with connections to other parks and bikepaths. Eventually, the plan calls for a linear park and trail connecting the J-Pit with the South Shore passenger railroad and the Gary Chicago Airport. Historic and environmental interpretive exhibits would be located along the trails.
Residents of Gary's Black Oak and West Side neighborhoods see the redevelopment and enhancement of the J-Pit as an opportunity to turn around the image of their communities. For 30 years the municipal landfill dominated the landscape. Now that the landfill is closed the community can plan for the future. Business development, jobs, environmental clean up, parks, and natural resource preservation have been identified by residents for their community. Besides the obvious benefits of jobs and neighborhood improvement and beautification, the J-Pit Redevelopment Project will help residents understand and develop plans to remediate many of the environmental problems they have struggled with over the years. Redevelopment and re-use of the J-Pit area will help to prevent illegal dumping and change the image of the neighborhood. The recreational trail and educational exhibits will provide the community a safe place to bike and walk as well as an opportunity to learn about the cultural and natural heritage of the area.

Project Milestones
May 2000 - Publicize receipt of grant and purpose of grant. Send out letters of invitation to participants in the J-Pit Brownfield Community Work Group.
Put out RFPs for Phase I and Phase II Environmental Assessment of J-Pit Area and Development of Remedial Plan.
June 2000 - First Meeting of J-Pit Brownfield Community Work Group. Publicize meeting in media. Schedule natural resource tour of J-Pit. Review responses to RFPs. Select consultant.
July 2000 - Natural Resource Tour of J-Pit.
Contract with selected consultant for Environmental Assessments and Remedial Plans. Proceed with Phase I.
Meet with Community Groups. Do door-to-door information giving and gathering.
September 2000 - Second Meeting of Community Work Group. Review Phase I Environmental Assessment. Make decisions regarding Phase II Environmental Assessments. Proceed with Phase II Environmental Assessments. Schedule School Presentations and involve student participants.
December 2000 - Third Meeting of Brownfield Community Work Group. Review Phase II Environmental Assessments. Begin discussions of remedial planning.
March 2001 – December 2001 - Five Brownfield Community Work Group Meetings to Develop Remedial Plan. Continue outreach and education. Publicize the project. Finalize reports and plans. Document project and evaluation. Proceed to Voluntary Remediation Program. Schedule second natural resource tour.

Funding and Potential Partners
The city will seek private partners to invest in development property in the J-Pit development area. Based on discussion and community planning decisions, management and maintenance of the development natural areas may become a part of the purchase contract. Other management options based on the future uses will be considered in the planning stage. In the design and implementation phase of the natural resource and recreation areas of the J-Pit Development, the city will seek support funding through grants from appropriate agencies and institutions as well as donations from local business and industry.

ATTACHMENTS INDEX

1. Letters of Support:

   Black Oak Redevelopment Corporation
   Gary/Chicago Airport Authority
   Gary Urban Enterprise Association
   Gary Chamber of Commerce
   Ivy Tech State College Northwest - Business and Industry Training
   Ivy Tech State College Northwest - Workforce Development Services
   Indiana University Northwest
   Northwest Indiana Brownfield Redevelopment Project, Inc.
   Lake County Soil & Water Conservation District
   Indiana Department of Environmental Management - Brownfields
   Indiana Department of Environmental Management - Northwest Office
   State Representative Dr. Vernon G. Smith
   State Senator Earline S. Rogers
   U. S. Representative Peter J. Visclosky

2. Airport Development Zone Map

3. Airport Development Zone Fact Sheet

4. Existing Site - Property Ownership Map

5. North Black Oak Redevelopment Plan

6. U. S. Conference of Mayors
   A National Report on Brownfields Redevelopment, Volume II, April 1999

7. Great Lakes Environmental Finance Center
   Brownfield Redevelopment Strategies for Gary, Indiana, July 13, 1999

8. Federal Home Loan Bank of Indianapolis
   Community Report - City of Gary, Indiana, Fall 1999

Black Oak Redevelopment Corporation

5404 West 25 Avenue
Suite 103
Gary, Indiana 46406

Phone (219) 989-9159
Fax (219) 989-9169

February 11, 2000

US Environmental Protection Agency
OSWER Outreach and Special Projects Staff (5101)
401 M Street
Room SE 385
Washington , DC 20460

To the Selection Committee,

The Black Oak Redevelopment Corporation (BORC) is a community organization working to promote the implementation of social and physical development in order to revitalize the Black Oak Area located in Gary, Indiana. Local business and residential development, jobs, infrastructure improvements , and environmental clean up are key concerns of our community.

Our organization fully supports the City of Gary's plan to redevelop the J-Pit area as a light Industrial park and a natural resource conservation and recreation area. We have worked with the City Of Gary Planning Department on the conceptual plan and want to be involved in the environmental assessment and remedial planning project that is proposed in the city's grant application.

Black Oak residents helped the city Environmental Affairs Department plan and implement an Illegal Dumping Prevention Project funded by EPA Region 5 that is presently underway in our neighborhood. We are looking forward to working on this project that will further involve residents in understanding and helping to develop solutions to long-standing problems that have been a barrier to community restoration and redevelopment.

The J-Pit Brownfield Redevelopment Project is a real opportunity to create jobs, protect people's health and the environment, and to provide recreational opportunities for the neighborhood and the entire city. The assessment and restoration of the J-Pit properties is the first step of this important project.

We request that you support Gary's Brownfields Assessment Pilot Program grant application and our efforts to revitalize our community.

Sincerely,

Margie Elea

Margie Elea
Executive Director

BORC Mission: To Enhance The Quality Of Life For The Residents Of Black Oak And Surrounding Communities.

GARY
CHICAGO
AIRPORT

Chicago's Best Approach

William L. Staehle
Administrator

Lavell Gatewood
Executive Director

SCOTT L. KING
MAYOR

AIRPORT BOARD OF AUTHORITY
Thomas J. Crump, Jr., President
Moses A. Dilts, Vice President
Reverend Charles Emery, Secretary
Lee G. Freel, Member

February 11, 2000

U. S. Environmental Protection Agency
OSWER Outreach and Special Projects Staff (5101)
401 M Street, SW
Room SE 385
Washington, DC 20460

To the Selection Committee,

I am writing in support of the City of Gary's proposal to receive a grant from U. S. EPA to do brownfields assessment and remedial planning for the J-Pit Redevelopment Site in the Airport Development Zone.

It is critical that brownfield properties in the Airport Development Zone (ADZ) are assessed, cleaned up, and made available for redevelopment. The Gary Chicago Airport is in the process of expanding. Pan Am has recently begun passenger service to the East Coast and Florida, and plans additional Midwest destinations. The Gary Chicago Airport is receiving requests daily for development sites located in the ADZ.

The City and the Gary Chicago Airport have developed a targeted strategy to identify, clean up and assemble brownfield property in the ADZ. The Airport Board has contributed $50,000 to the Gary ADZ Assessment Project for Phase I Environmental Site Assessments on properties adjacent to the Gary Chicago Airport facility. The recent acquisition of the J-Pit properties has provided the opportunity to move forward quickly on the assessment and clean up of very desirable acreage in the ADZ.

I strongly encourage your support of this proposal.

Sincerely,

William Staehle
Administrator

GARY/CHICAGO AIRPORT AUTHORITY DISTRICT
6001 WEST INDUSTRIAL HIGHWAY • GARY, INDIANA 46406 • PH. (219) 949-9722 • FAX (219) 949-0573

Gary Urban Enterprise Association

825 South Lake Street Gary, IN 46403 Phone: (219) 939-9663 Fax: (219) 939-2891

Christopher M. Morrow
Chairman

Derrick Earls
Vice Chairman

Margaret Goudeaux
Treasurer

Johnnie Wright
Secretary

Larry S. Webb

Moses Steel

Gardest Gillespie

Doris Jackson

Gwendolyn Adams

Shirlonda Dowd

Sherilyn McCrady

Earline Rogers

J. Lynn Meeks
Executive Director

February 11, 2000

U.S Environmental Protection Agency
OSWER Outreach and Special Projects Staff (S101)
401 M Street, SW
Room SE 38S
Washington, DC 20460

To the Selection Committee,

I am writing on behalf of the City of Gary, Indiana and their application to receive an EPA Pilot Project grant to fund environmental assessment and remedial planning for the J-Pit Brownfield Redevelopment Project located within the boundaries of the Gary Airport Development Zone.

The Gary Urban Enterprise Zone, in its capacity as manager of the Airport Development Zone (ADZ), has been working with the City of Gary to develop an assessment, clean up, and redevelopment strategy for brownfield properties in the ADZ. With the recent expansion of flights and business interest in the Gary Chicago Airport, we need to quickly facilitate the availability of development properties in the 8,200 acre ADZ.

The J-Pit Brownfield Redevelopment Project offers an excellent opportunity for a successful and sustainable economic development and environmental protection project. The proposed combination of light industrial development in conjunction with natural resource restoration and preservation can provide a model for urban redevelopment projects in Gary and throughout the region.

We are in support of this application and will work with the City of Gary to make this a successful brownfield redevelopment project.

Sincerely,

J. Lynn Meeks
Executive Director

Gary
Chamber
of
Commerce

February 10, 2000

U. S. Environmental Protection Agency
OSWER Outreach and Special Projects Staff (5101)
401 M Street, SW
Room SE 385
Washington, DC 20460

Re: J-Pit Redevelopment Project

Dear Sir or Madam:

I am writing in support of the City of Gary's application to the U. S. Environmental Protection Agency for a $250,000 Brownfields Demonstration Pilot Grant.

This is a very exciting and challenging time for this community. Brownfields and Brownfields Redevelopment are of paramount concern as they relate to the future of community and economic development. There's much hope in the benefits that Brownfields Redevelopment can provide to a community like Gary, Indiana.

We are waiting and ready to assist in this redevelopment process as it relates to the business development and marketing components. We look forward to working with the city, neighborhood groups and interested stakeholders in this massive undertaking.

The success of this project is only a decision away. Your utmost consideration is requested.

Again, thank you for the time and consideration given to this application.

Sincerely,

Jeff Williams
Executive Director

504 Broadway, Gary IN 46402 219-885-7407 Fax: 219-885-7408

1440 East 35th Avenue
Gary, Indiana 46409
219-981-1111

February 14, 2000

U.S. Environmental Protection Agency
OSWER Outreach and Special Projects Staff (5101)
401 M Street, SW
Room SE 385
Washington, DC 20460

Re: J-Pit Redevelopment Project

Dear Sir or Madam:

I am writing to support the City of Gary Department of Environmental Affairs and their efforts to receive a $250,000 U.S. Environmental Protection Agency Brownsfields Demonstration Pilot Grant.

The City of Gary has many issues to resolve and Brownsfields/Brownsfields Redevelopment represents a major one. The opportunity to improve conditions by cleaning up and returning valuable land to productive use is very exciting.

At some point in the project's redevelopment process, we hope to get involved in some aspect of the education and training of local residents.

Your support of this application is requested.

Sincerely,

Arlene Pearson
Business Coordinator
Business and Industry Training
Ivy Tech State College Northwest

IVY TECH STATE COLLEGE

Ivy Tech is an accredited,
equal opportunity,
affirmative action state college.

Workforce Development Services

1776 W. 37th Avenue • Gary, Indiana 46408-2002
Phone: 219-981-4100 • Fax: 219-981-4121

February 16, 2000

U.S. Environmental Protection Agency
OSWER Outreach and Special Projects Staff (5101)
401 M Street, SW
Room SE 385
Washington, DC 20460

Re: J-Pit Redevelopment Project

Dear U.S. EPA Representative:

I am writing to support the City of Gary application for $250,000 U.S. Environmental Protection Agency Brownfields Demonstration Pilot Grant.

This grant would be used for much needed environmental work and community outreach. The opportunity to improve health and economic conditions by cleaning up and returning valuable land to productive use is very important to this community. I applaud all efforts to carry out and achieve these goals. I further look forward to participating in the Workforce Development activities associated with this project.

Workforce Development Services' mission statement is to, "*Aspire to status as a high-quality provider of a comprehensive set of programs and services which reflect state-of-the-art designs as technologies. It also seeks to serve as a catalyst for positive change in Northwest Indiana.*"

Thank you for considering the worthiness of this application.

Sincerely,

Denise Dillard

Denise Dillard
Center Director

DD/mlf

INDIANA UNIVERSITY
NORTHWEST

DEPARTMENT OF
MINORITY STUDIES

February 15, 2000

U.S. Environmental Protection Agency
OSWER Outreach and Special Projects Staff (5101)
401 M Street, SW
Room SE 385
Washington, DC
20460

Dear Reviewers:

This is a letter in support of a grant submitted by the City of Gary, Indiana for site assessment, site characterization, a remediation plan and redevelopment of the J pit in the City of Gary. The J Pit and surrounding area has been a serious and major source of environmental degradation and controversy in the City of Gary. Located in the Gary Airport development zone, the J Pit is a serious deterrent to economic development of the zone and the City of Gary. As Project Director and Principle Investigator for the local U.S. EPA Community University Environment Justice Grant, funding of the proposal is essential to begin to reverse the deleterious effects of the J Pit in the community. The emphasis in the proposal given to the outreach activities and the technical consultant are critical aspects of the proposal which are aimed directly at including environmental justice concerns in the project development. The proposal has my strong recommendation.

Sincerely,

Earl R. Jones, Ph.D.
Project Director and Principle Investigator
U.S. EPA Environmental Justice
Community University Partnership;
Associate Dean for Planning,
Division of Arts and Sciences

3400 Broadway
Gary, Indiana
46408-1197

219-980-6629

NORTHWEST INDIANA BROWNFIELD REDEVELOPMENT PROJECT, INC.
720 West Chicago Avenue, Suite #211
East Chicago, IN 46312
Phone: 219-397-5905
Fax: 219-397-5934

Carol Ann Seaton,
Executive Director

February 10, 2000

U.S. Environmental Protection Agency
OSWER Outreach and Social Projects Staff (5101)
401 M. Street, SW
Room SE 385
Washington, DC 20460

Re: J-Pit Redevelopment Project

Dear Sir or Madam:

The purpose of this letter is to express the support of the Northwest Indiana Brownfield Redevelopment Project, Inc. for the City of Gary application for a $250,000 U.S. Environmental Protection Agency Grant for the Brownfields Assessment Demonstration Pilot Program.

We are a direct supporter and partner in efforts to redevelop Brownfields in the City of Gary. The J-Pit Redevelopment Project is worthy of your support because the contribution to this project will begin the process for environmental assessments and remediation, as well as, provide the potential to leverage considerable other public and private funds.

The targeted development area is large and offers the opportunity to have quality mixed-use development including a green space development that has nature trails and preservation areas. This project will provide an excellent example of sustainable urban reuse because it combines economic development, environmental protection, pollution prevention, and nature preservation.

The grant will represent an important step forward for the City of Gary's Brownfields Initiative and future redevelopment opportunities for this site and surrounding area. This project has the potential to bring many jobs and training opportunities to the City of Gary. We ask that you support this application.

Sincerely,

Carol-Ann Seaton,
Executive Director

Mary Mulligan,
President

Dan Repay,
Vice President

Reggie Korthals,
Secretary

Rev. J. Patrick Gaza,
Treasurer

Turning today's brownfields into tomorrow's economic opportunities!

Lake Michigan

GRAND CAL TASK FORCE

at Calumet College

2400 New York Avenue ▪ Suite 303 ▪ Whiting, Indiana 46394
Phone 219-473-4246 ▪ 219-473-4249 ▪ FAX 219-473-4288
email - gctf@igc.org ▪ website www.grandcal.org

February 14, 2000

U.S. Environmental Protection Agency
OSWER Outreach and Special Projects Staff (5101)
401 M Street, S.W.
Washington, DC 20460

Re: U.S. EPA Brownfields Economic Redevelopment Initiative

Dear Sir or Madam:

Please accept this letter of support for the City of Gary's application to the U.S. EPA Demonstration Pilot Program for the J-Pit Redevelopment Pilot Project.

The redevelopment of brownfields is necessary for urban areas to begin to compete with suburban greenfields and mitigate the ramifications of urban sprawl and the destruction of natural resources.

The environmental aspects of this project provide many rewards—improving the condition of the environment, eradicating any threats to human health, restoring and preserving natural resources and promoting the beauty and wonder of nature with trails and parks.

The economic rewards will be just as significant. Jobs for local residents, new business development, increased tax revenues for the city and an improved neighborhood top the list.

This grant award is necessary to provide the much needed funding for assessments and remediation planning that this area needs. I urge your support for this application.

Sincerely,

Bowden Quinn
Executive Director

printed on recycled paper

Lake County Soil and Water Conservation District
928 South Court Street, Suite C - Crown Point, IN 46307-4848 - 219-663-0588 Ext. 3

February 14, 2000

U. S. Environmental Protection Agency
OSWER Outreach and Special Projects Staff (5101)
401 M Street, SW
Room SE 385
Washington, DC 20460

To the Selection Committee,

The Lake County Soil and Water Conservation District and the Indiana Department of Natural Resources have been working with the City of Gary on a variety of natural resource protection and restoration programs over the past several years. We have worked on partnership projects to restore dunes on Gary Beaches and to develop innovative surface water run-off management systems to protect the water quality of local lagoons and rivers. Most recently, we have provided technical assistance to the city on sand erosion and dune grass management at the Closed Gary Landfill.

We are looking forward to working with Gary and the J-Pit Brownfield Redevelopment partners to restore and preserve the 90 acre former sand mine into an enhanced natural resource and recreation area. We will participate in the J-Pit from the perspective of natural resource managers and potential future design and uses. We will work with the community, the city and their environmental consultants to develop a remedial plan for the site which integrates the future natural resource opportunities with the clean up and management plan.

The Lake County Soil and Water Conservation District works within both the urban and rural environments of Lake County. We recognize the need to reduce urban sprawl by redeveloping urban lands. We also recognize the need to restore and enhance greenspace and natural features in the urban environment. The J-Pit Brownfield Redevelopment Project addresses both of these needs and we hope through our participation to contribute to a successful planning implementation process.

Sincerely,

Brian Wietbrock

Brian Wietbrock
SWCD, Chairman

Sue Gerlach
Larry Osterholz

Indiana Department of Natural Resources
Division of Soil Conservation

Larry Osterholz, Stormwater Specialist
Sue Gerlach, Resource Specialist

INDIANA DEPARTMENT OF ENVIRONMENTAL MANAGEMENT

We make Indiana a cleaner, healthier place to live

Frank O'Bannon
Governor

Lori F. Kaplan
Commissioner

100 North Senate Avenue
P.O. Box 6015
Indianapolis, Indiana 46206-6015
(317) 232-8603
(800) 451-6027
www.state.in.us/idem

February 15, 2000

Ms. Mary Mulligan
City of Gary, Department of Environmental Affairs
540 Broadway, Suite 1012
Gary, IN 46402

Re: U.S. EPA Brownfields Assessment
Demonstration Pilot

Dear Ms. Mulligan:

I am happy to provide this letter of support for your application for the U.S. Environmental Projection Agency Brownfields Demonstration Assessment Pilot. The City of Gary has demonstrated its commitment to redeveloping brownfields by being an active participant in the Northwest Indiana Brownfields Redevelopment Project and by taking advantage of the State of Indiana's Brownfields Grant and Loan Program.

The Indiana Department of Environmental Management recognizes there are unique environmental challenges in your city, and we are committed to providing technical assistance and coordination of our programs to help remove the environmental barriers to the redevelopment of your brownfields properties. We are confident that Gary will be an excellent pilot selection. Good luck and we are looking forward to continuing our partnership.

Sincerely,

Dana Reed Wise

Dana Reed Wise, Chief
Brownfields and Site Investigation Programs
Office of Land Quality

INDIANA DEPARTMENT OF ENVIRONMENTAL MANAGEMENT
We make Indiana a cleaner, healthier place to live

Frank O'Bannon
Governor

Lori F. Kaplan
Commissioner

Northwest Regional Office
504 North Broadway, Suite 418
Gary, Indiana 46402-1942
(219) 881-6712
(888) 209-8892 Toll Free
(219) 881-6745 Fax
(800) 451-6027 EnviroLine
www.state.in.us/idem

February 15, 2000

US Environmental Protection Agency
OSWER Outreach and Special Projects Staff (5101)
401 M Street, SW
Room SE 385
Washington, DC 20460

Re: U.S. EPA Brownfield Assessment
Demonstration Pilot

Dear Grants Administrator:

I support the City of Gary's application for the U.S. Environmental Projection Agency Brownfields Demonstration Assessment Pilot. The Northwest Regional Office acknowledges that the J-Pit Redevelopment Project can help Gary economic development and promote other environmental clean up projects. I am confident that Gary will be an excellent pilot selection.

Sincerely,

Adriane Esparza
Director

STATE OF INDIANA
HOUSE OF REPRESENTATIVES
THIRD FLOOR STATE HOUSE
INDIANAPOLIS, INDIANA 46204

DR. VERNON G. SMITH
ASST. MAJORITY FLOOR LEADER
P.O. BOX M822
GARY, IN 46401

COMMITTEES:
EDUCATION
ELECTIONS AND APPORTIONMENT
HUMAN AFFAIRS

February 11, 2000

U.S. Environmental Protection Agency
OSWER Outreach and Special Projects Staff
401 M Street, SW
Room SE 385
Washington, D.C. 20460

Dear Grant Coordinator:

It is my understanding that the City of Gary is seeking a Brownfields Assessment Demonstration Pilot Grant. Please consider this letter my expression of full and public support for the awarding of this grant to the city.

I have reviewed the grant proposal and feel that it is sound and supports the revitalization efforts in our city. The creation of a light industrial park and a natural resources preservation area are both goals that would contribute positively to the quality of life in Gary. The awarding of this grant would lend financial support to the project in its assessment and planning stages.

I join those who are working in support of the Brownfields Assessment Development Pilot Grant in encouraging its approval at the earliest possible opportunity.

Respectfully yours,

Vernon

Dr. Vernon G. Smith
State Representative
House District 14

VGS/ts

STATE OF INDIANA SENATE

Senator Earline S. Rogers
Assistant Minority Floor Leader
3636 W. 15th Ave.
Gary, IN 46404-1828
Business (219) 977-2152
Residence (219) 949-7578
EMAIL: S3@ai.org

Committees:
Appointments & Claims, R.M.M.
Education
Health & Provider Services
Rules & Legislative Procedure

February 15, 2000

U.S. Environmental Protection Agency
OSWER Outreach and Special Projects Staff (5101)
401 M Street, SW
Washington, DC 20460

Re: U.S. EPA Brownfields Economic Redevelopment Initiative

Dear U.S. EPA Representative:

I fully support the City of Gary's application to the U.S. EPA Demonstration Pilot Program for the J-Pit Redevelopment Pilot Project.

The redevelopment of Brownfield properties in the city of Gary are paramount to successful community economic development. In my capacity, I have supported the needs of the city as much as possible and see the need for federal and other support sources. We are at the crossroads where we must achieve environmental clean ups and the redevelopment of Brownfield properties.

The benefits and rewards provided by Brownfields Redevelopment can aid in restoring stability to the city of Gary. There is nothing more important than improving the quality of life for the residents of this community.

I look forward to actively participating in this project. And I urge your support for this application.

Sincerely,

Earline S. Rogers

Earline S. Rogers
State Senator

PETER J. VISCLOSKY
1ST DISTRICT, INDIANA

COMMITTEE ON APPROPRIATIONS
SUBCOMMITTEES:
DEFENSE
ENERGY AND WATER DEVELDPMENT
CONGRESSIONAL STEEL CAUCUS
EXECUTIVE COMMITTEE VICE-CHAIRMAN
NORTHEAST-MIDWEST
CONGRESSIONAL COALITIDN
MIDWEST VICE-CHAIR

Congress of the United States
House of Representatives
Washington, DC 20515-1401

2313 RAYBURN BUILDING
WASHINGTON, DC 20515-1401
(202) 225-2461

215 WEST 35TH AVENUE
GARY, IN 46408
TTY-TDD SERVICE AVAILABLE
(219) 884-1177

PORTAGE CITY HALL
(219) 763-2904

VALPARAISO CITY HALL
(219) 464-0315

INTERNET:
http://www.house.gov/visclosky/

February 16, 2000

Secretary Carol Browner
Environmental Protection Agency
401 M Street SW
Washington, DC 20460

Dear Secretary Browner:

I write in strong support for an EPA Brownfields Economic Redevelopment Initiative grant submitted by the City of Gary, Indiana. I appreciate all consideration be given to their application.

This grant will be utilized to provide the City of Gary with the necessary information to redevelop a brownfield area covering approximately 200 acres. These funds will be applied to conduct an environmental assessment of the site, determine the characteristic of the site and prepare a remediation plan. In addition, the City of Gary will include a component of this grant program to institute a community outreach initiative that will educate the surrounding neighborhoods on any actions that are being proposed on site.

I thank you for your time and effort extended in reviewing the City of Gary grant proposal. Again, I hope all consideration be given to their application.

Sincerely,

Peter J. Visclosky

Peter J. Visclosky
Member of Congress

PJV:ml

THIS STATIONERY PRINTED ON PAPER MADE OF RECYCLED FIBERS

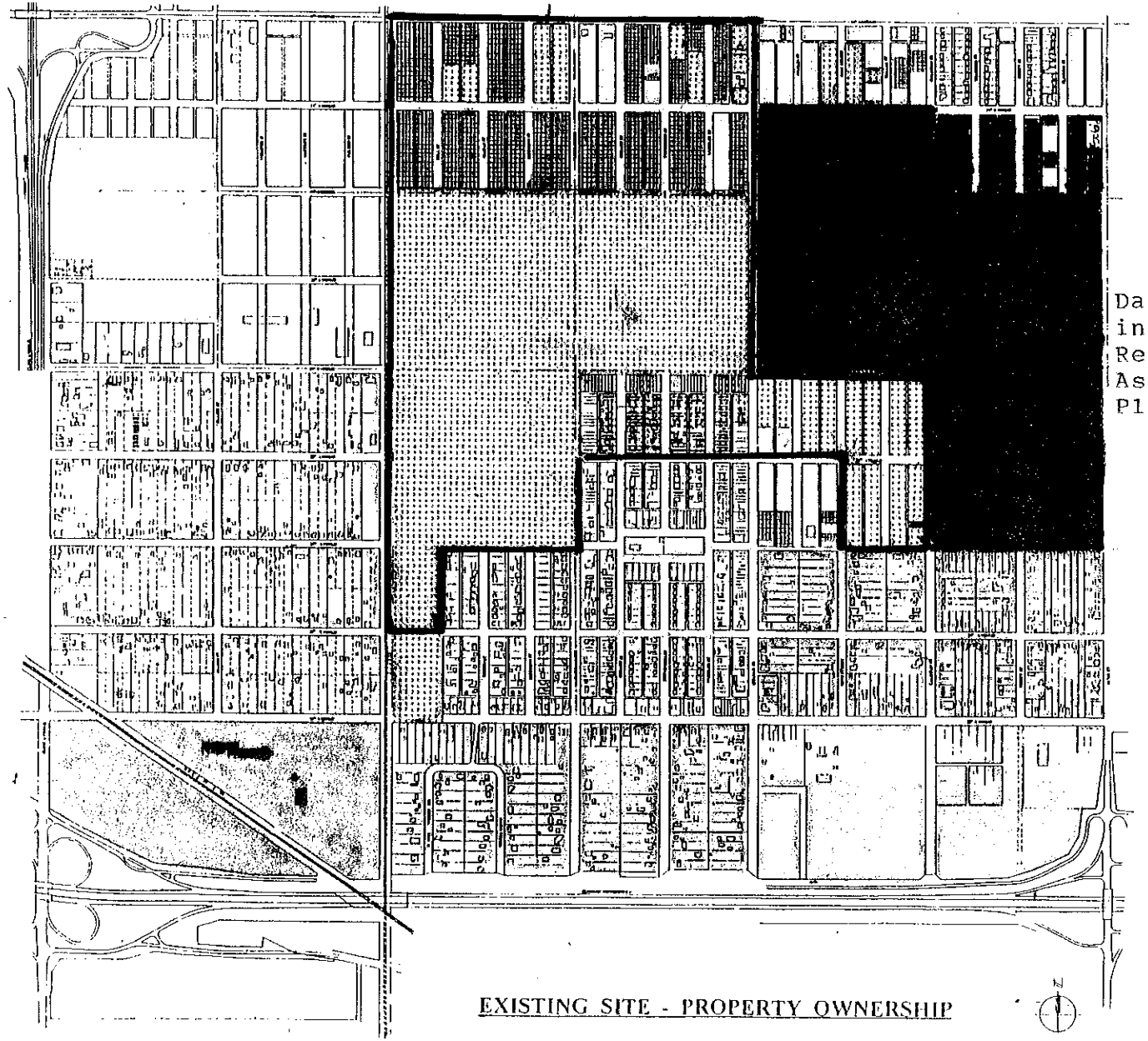

LEGEND

- WASTE MANAGEMENT
- CITY OWNED
- COUNTY OWNED
- GARY SANITARY LANDFILL
- PRIVATE / RESIDENTIAL

Dark Outline Area indicates J-Pit Redevelopment Site Assessment & Remedial Planning Area.

EXISTING SITE - PROPERTY OWNERSHIP

CITY OF GARY

MAYOR SCOTT L. KING

DEPARTMENT OF PLANNING

NORTH BLACK OAK
REDEVELOPMENT PLAN

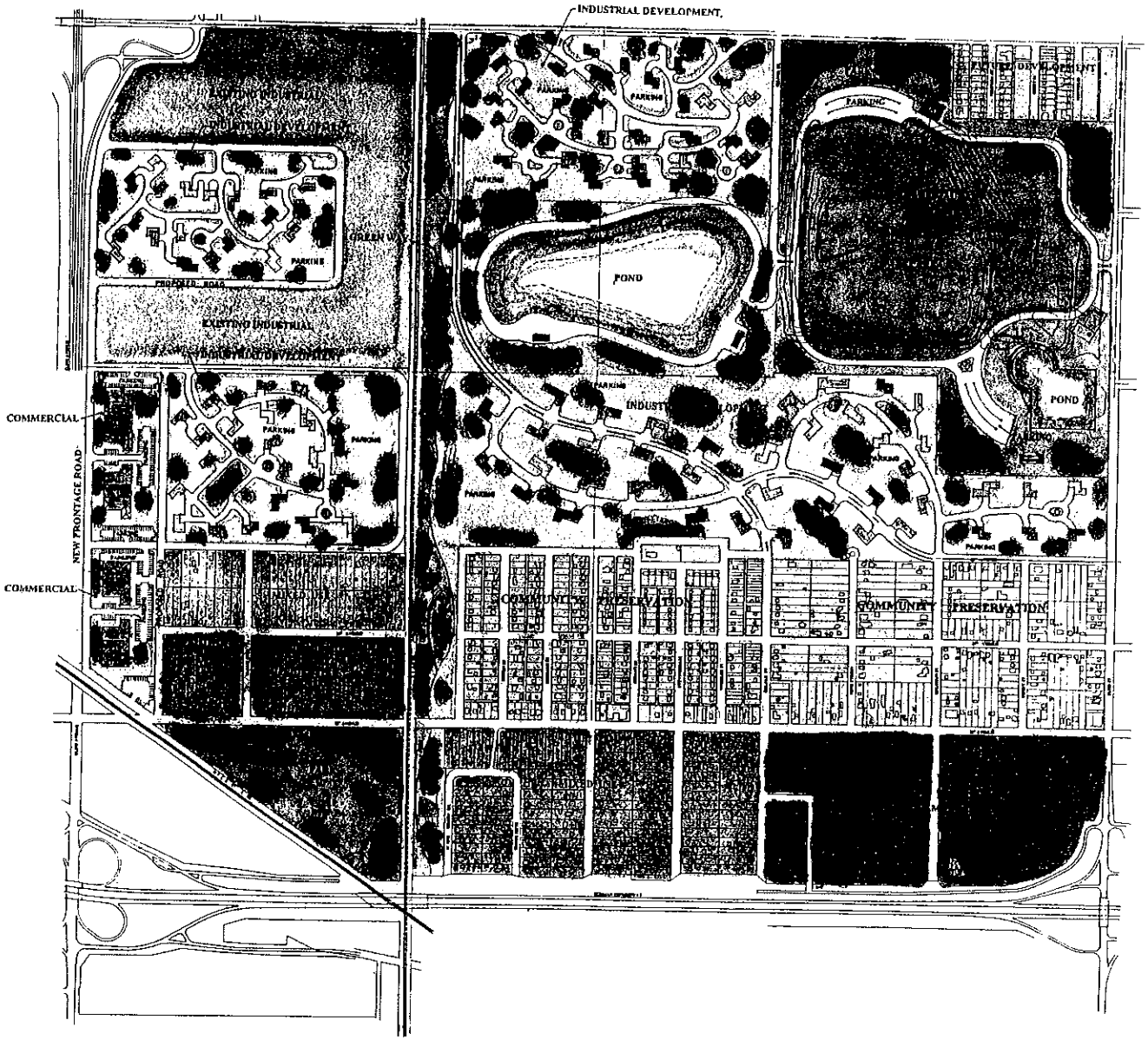

SCHEME - A

PROPOSED REDEVELOPMENT PLAN
SCALE 1" = 400'-0"

CITY OF GARY

SCOTT L. KING MAYOR

DEPARTMENT OF PLANNING & COMMUNITY DEVELOPMENT

Airport Development Zone Map [redacted]

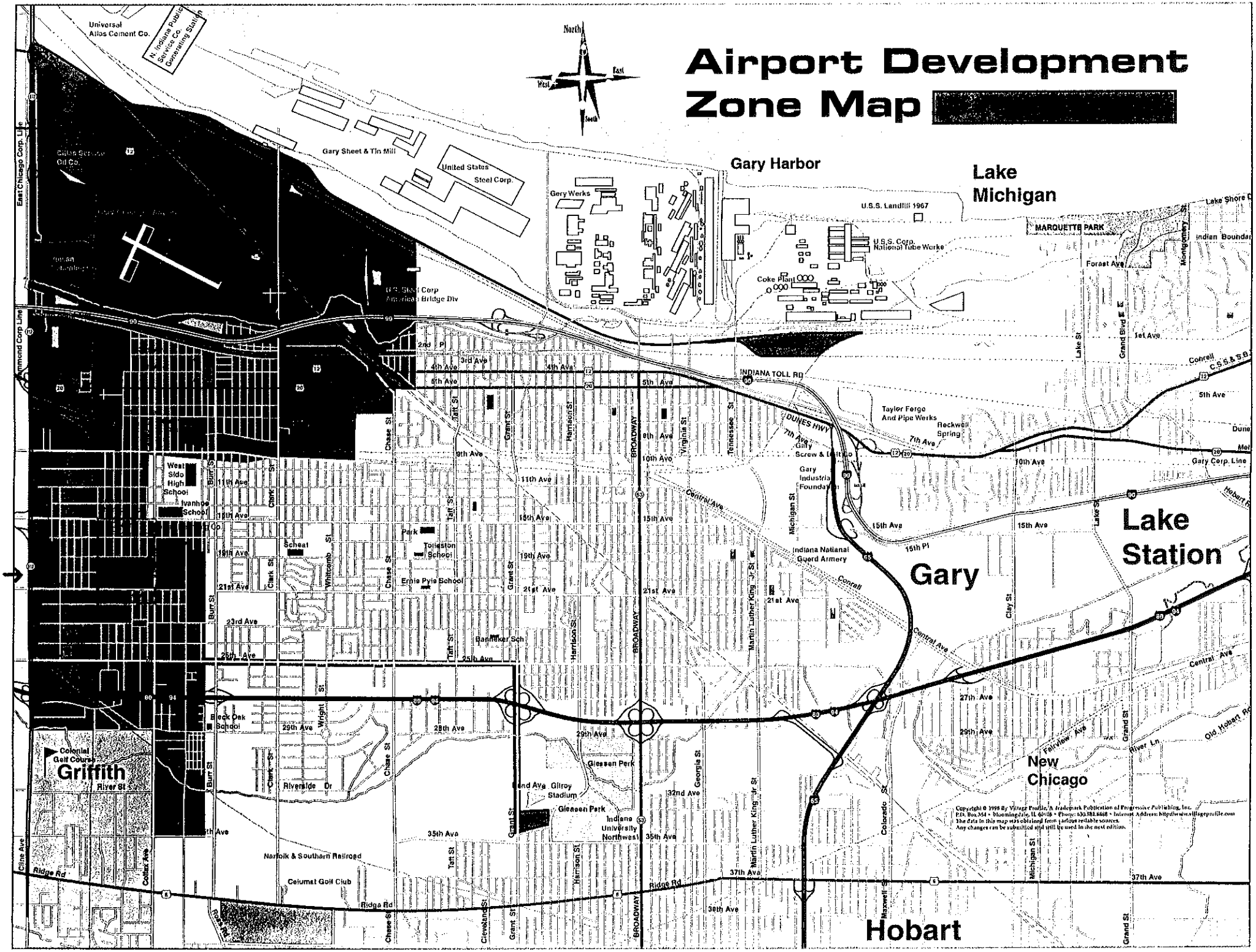

Section 5 (J-Pit)

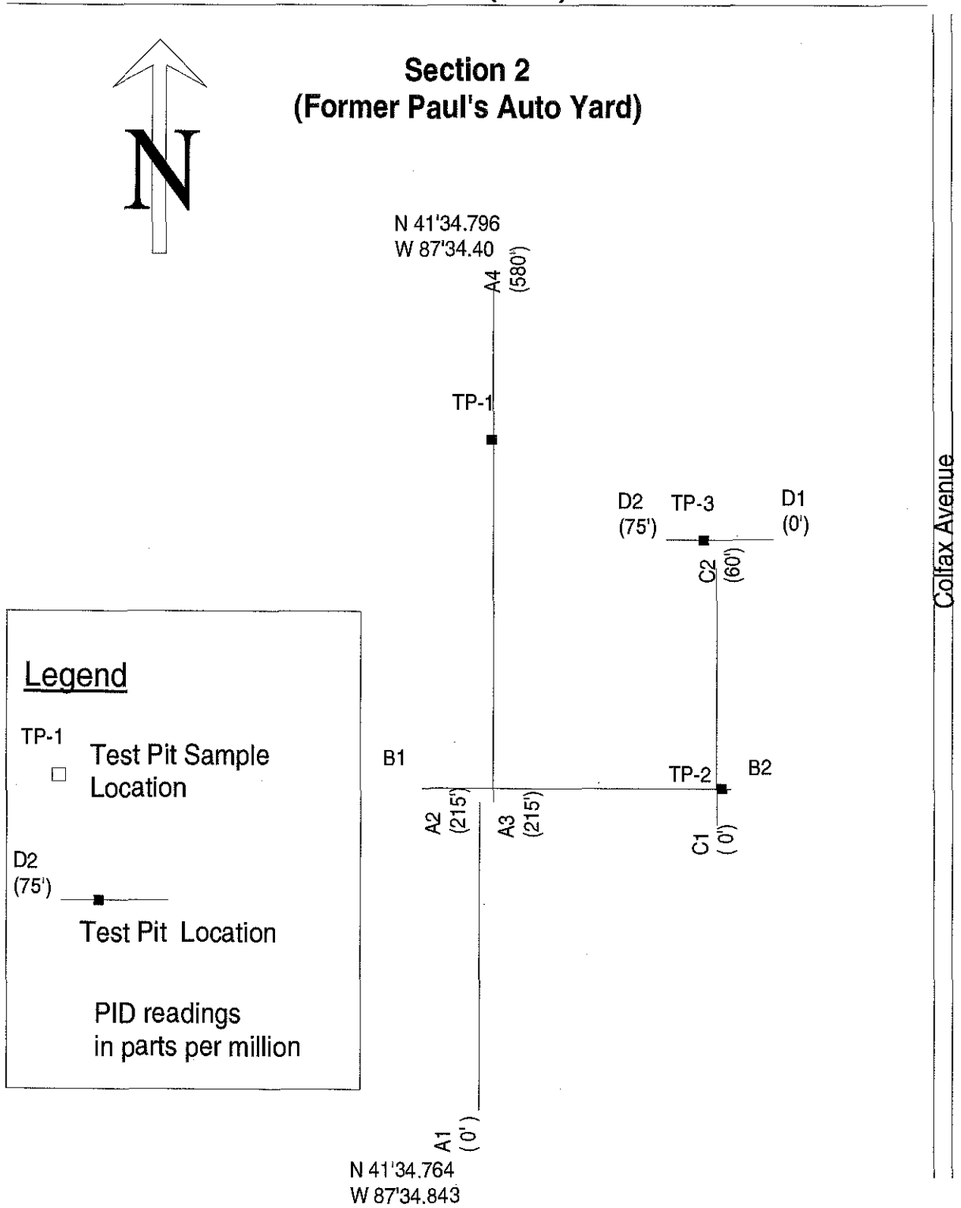

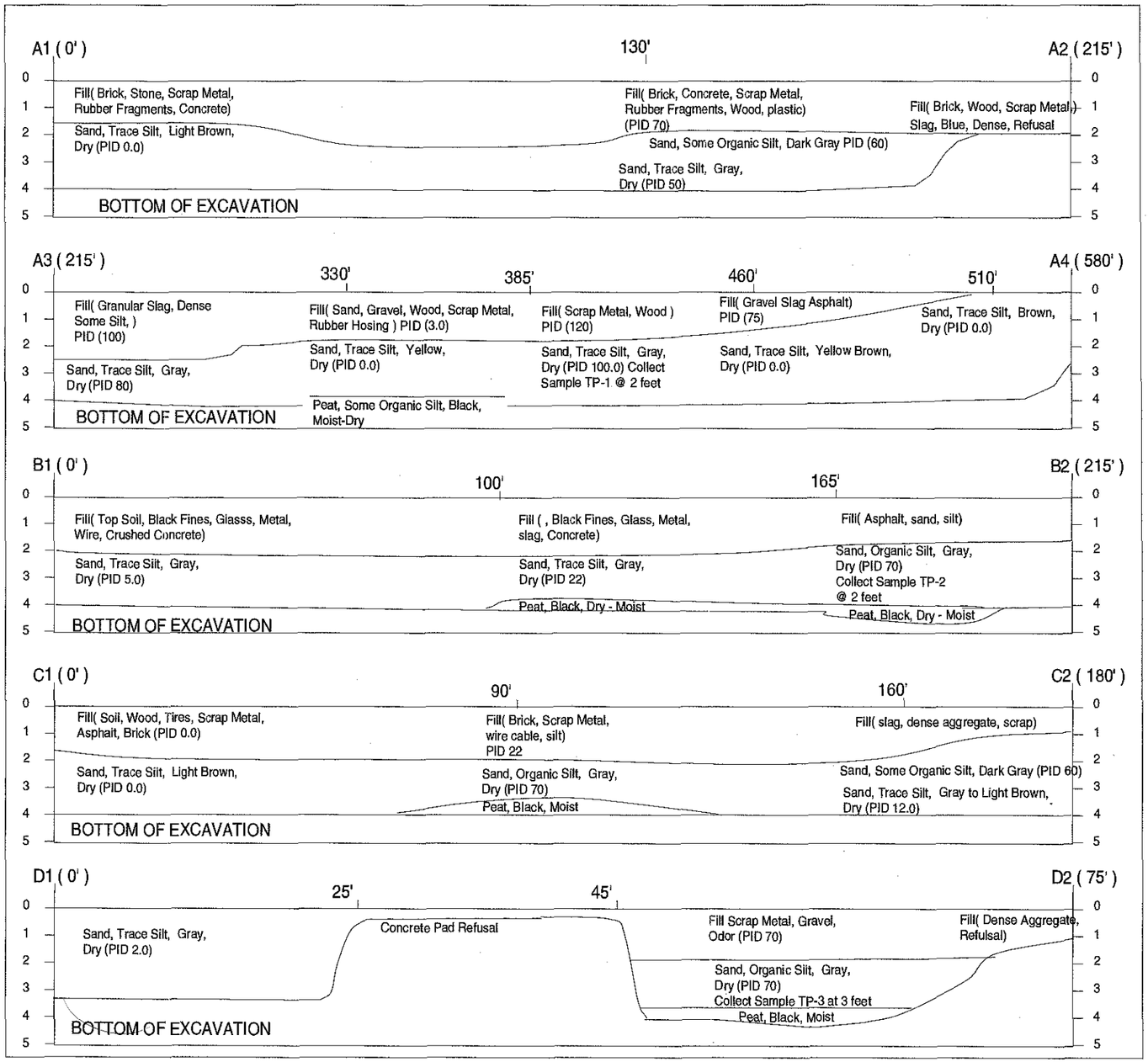

Drawn: RMS **Reviewed: JDP** **11-25-03** **Not to Scale**	**J-Pit Phase II ESA** **City of Gary** **Gary Indiana**	**BAKER ENVIRONMENTAL** **MERRILLVILLE, INDIANA**	**Figure 4**	**Test Pit Cross Section Diagrams**

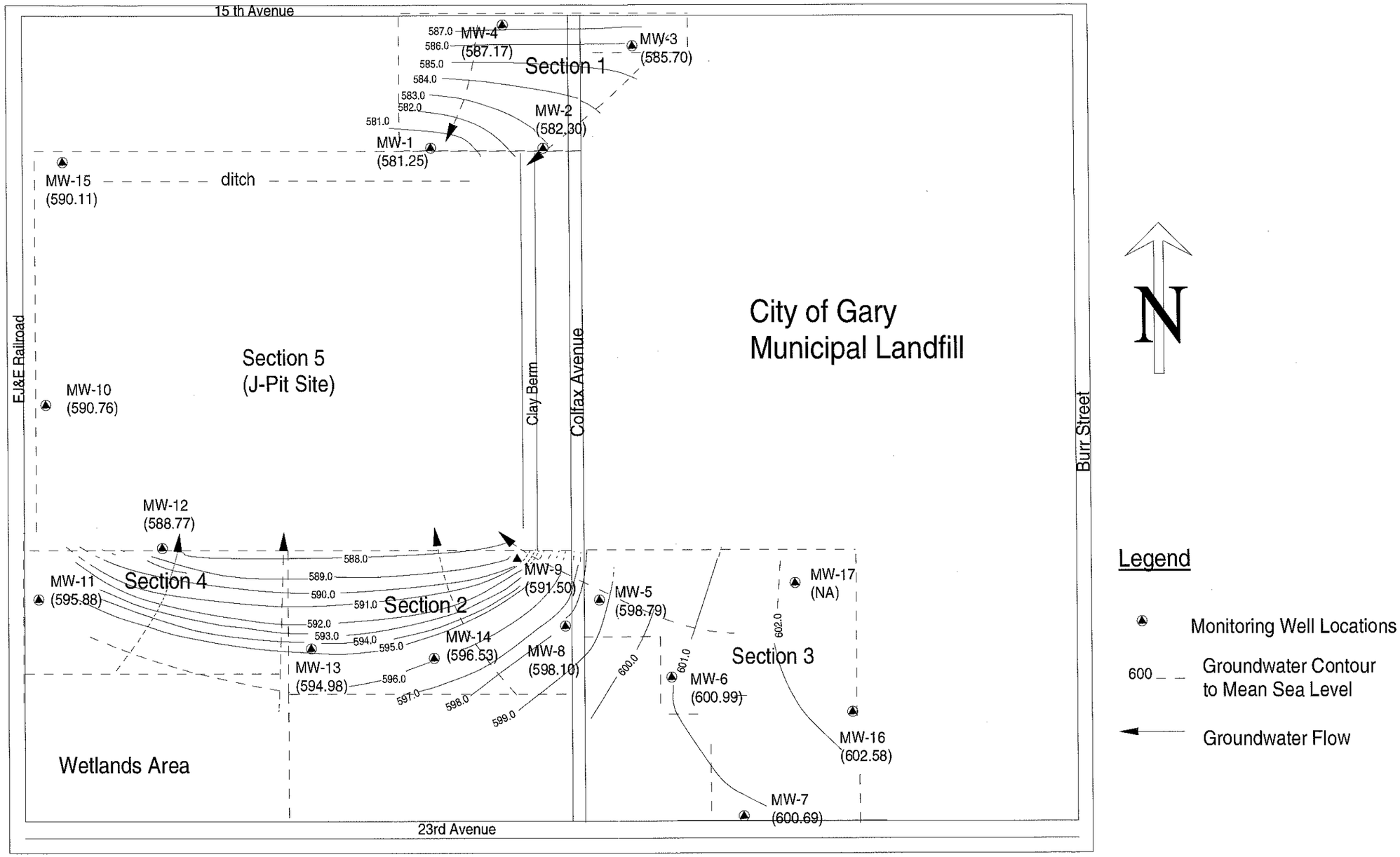

Drawn: RMS **Reviewed: JDP** **11-05-03** **Not to Scale**	**J-Pit Phase II ESA** **City of Gary** **Gary, Indiana**	**BAKER ENVIRONMENTAL** **CROWN POINT, INDIANA**	**Figure 5a**	**Groundwater Contour Map** **November 2002**

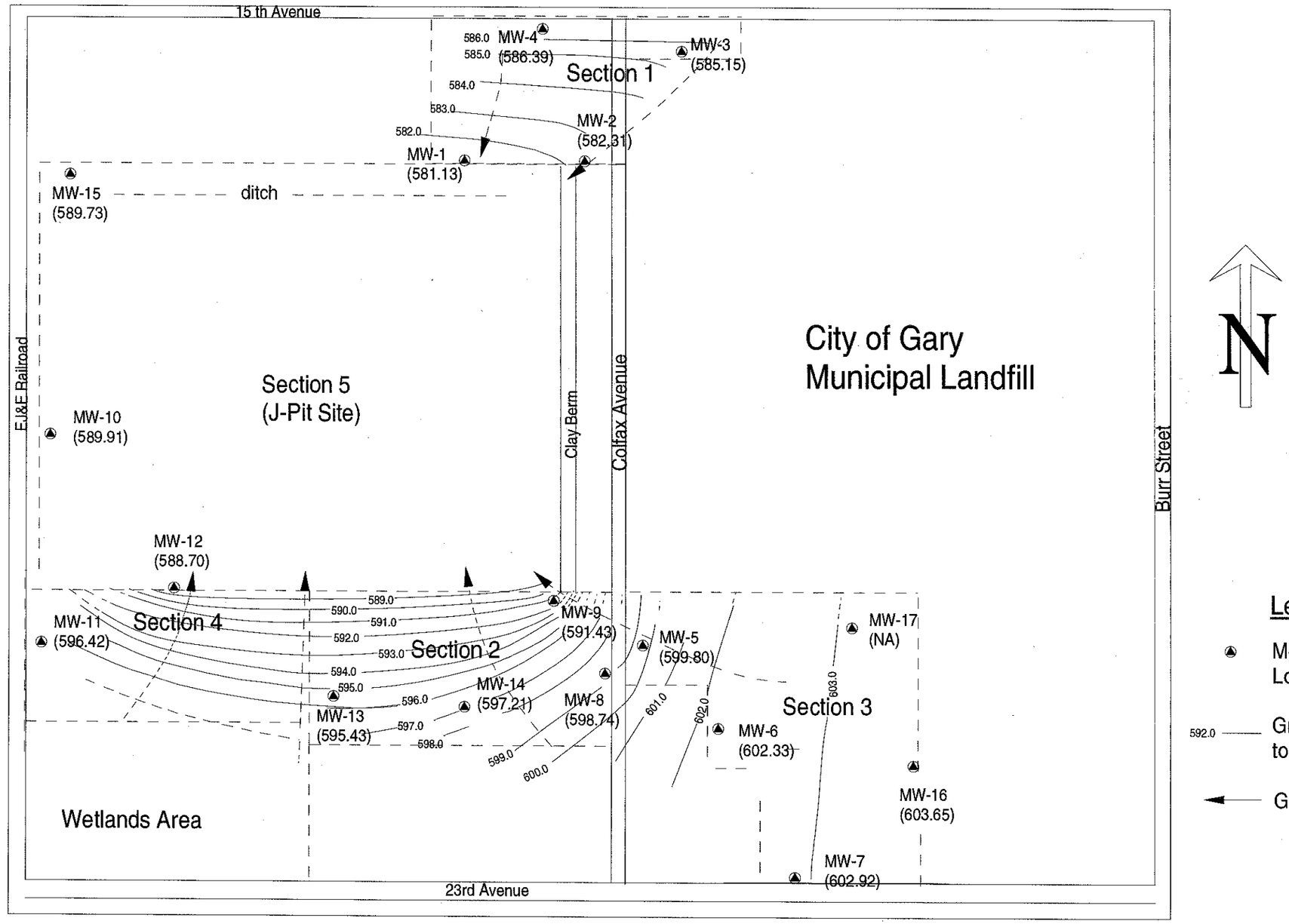

Drawn: RMS **Reviewed: JDP** **11-05-03** **Not to Scale**	**J-Pit Phase II ESA** **City of Gary** **Gary, Indiana**	**BAKER ENVIRONMENTAL** **CROWN POINT, INDIANA**	**Figure 5b**	**Groundwater Contour Map April 2003**

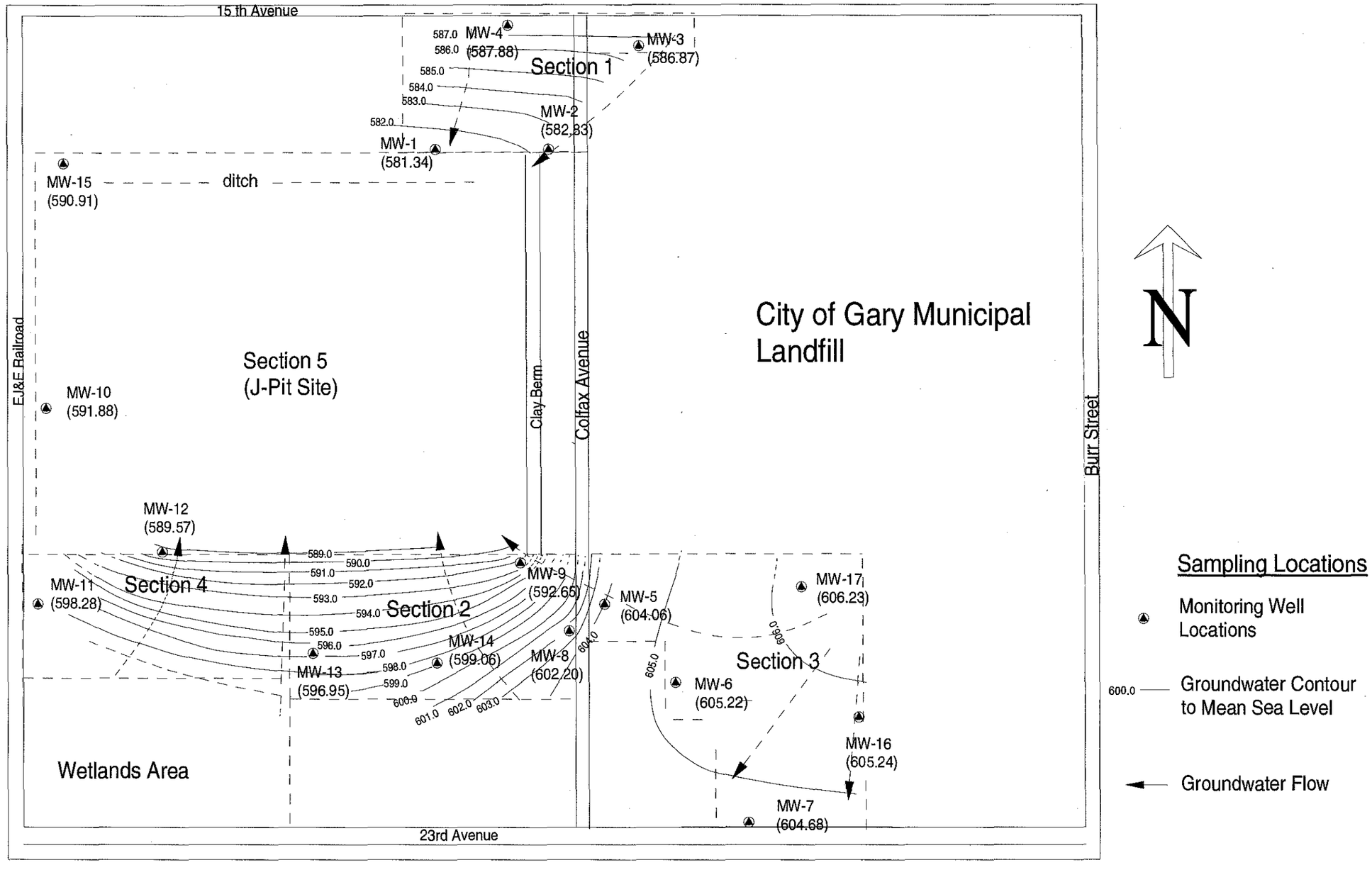

Drawn: RMS **Reviewed: JDP** **11-05-03** **Not to Scale**	**J-Pit Phase II ESA** **City of Gary** **Gary, Indiana**	**BAKER ENVIRONMENTAL** **CROWN POINT, INDIANA**	**Figure 5c**	**Groundwater Contour Map** **July 2003**

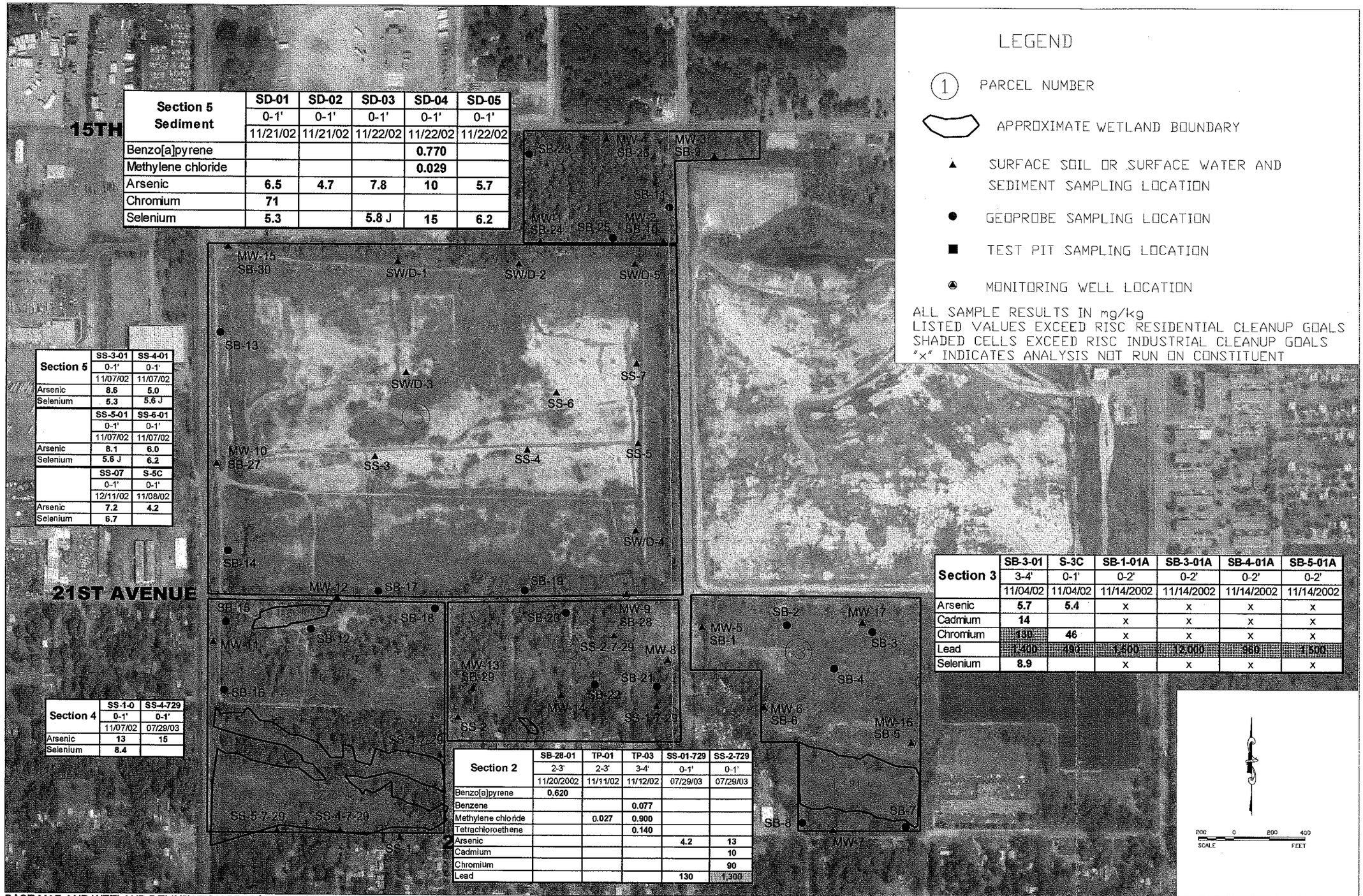

LEGEND

(1) PARCEL NUMBER

APPROXIMATE WETLAND BOUNDARY

▲ SURFACE SOIL OR SURFACE WATER AND SEDIMENT SAMPLING LOCATION

● GEOPROBE SAMPLING LOCATION

■ TEST PIT SAMPLING LOCATION

MONITORING WELL LOCATION

ALL SAMPLE RESULTS IN mg/kg
LISTED VALUES EXCEED RISC RESIDENTIAL CLEANUP GOALS
SHADED CELLS EXCEED RISC INDUSTRIAL CLEANUP GOALS
"x" INDICATES ANALYSIS NOT RUN ON CONSTITUENT

Section 5 Sediment	SD-01	SD-02	SD-03	SD-04	SD-05
	0-1'	0-1'	0-1'	0-1'	0-1'
	11/21/02	11/21/02	11/22/02	11/22/02	11/22/02
Benzo[a]pyrene				0.770	
Methylene chloride				0.029	
Arsenic	6.5	4.7	7.8	10	5.7
Chromium	71				
Selenium	5.3		5.8 J	15	6.2

Section 5	SS-3-01	SS-4-01
	0-1'	0-1'
	11/07/02	11/07/02
Arsenic	8.6	5.0
Selenium	5.3	5.6 J

	SS-5-01	SS-6-01
	0-1'	0-1'
	11/07/02	11/07/02
Arsenic	8.1	6.0
Selenium	5.6 J	6.2

	SS-07	S-5C
	0-1'	0-1'
	12/11/02	11/08/02
Arsenic	7.2	4.2
Selenium	6.7	

Section 4	SS-1-0	SS-4-729
	0-1'	0-1'
	11/07/02	07/29/03
Arsenic	13	15
Selenium	8.4	

Section 2	SB-28-01	TP-01	TP-03	SS-01-729	SS-2-729
	2-3'	2-3'	3-4'	0-1'	0-1'
	11/20/2002	11/11/02	11/12/02	07/29/03	07/29/03
Benzo[a]pyrene	0.620				
Benzene			0.077		
Methylene chloride		0.027	0.900		
Tetrachloroethene			0.140		
Arsenic				4.2	13
Cadmium					10
Chromium					90
Lead				130	1,300

Section 3	SB-3-01	S-3C	SB-1-01A	SB-3-01A	SB-4-01A	SB-5-01A
	3-4'	0-1'	0-2'	0-2'	0-2'	0-2'
	11/04/02	11/04/02	11/14/2002	11/14/2002	11/14/2002	11/14/2002
Arsenic	5.7	5.4	x	x	x	x
Cadmium	14		x	x	x	x
Chromium	130	46	x	x	x	x
Lead	1,400	491	1,500	12,000	880	1,500
Selenium	8.9		x	x	x	x

BASE MAP AND WETLAND DELINEATION PROVIDED BY V3 CONSULTANTS WOODRIDGE, ILLINOIS

Baker
BAKER ENVIRONMENTAL, INC.
CROWN POINT, INDIANA

REVISIONS

NO.	DATE	DESCRIPTION	NO.	DATE	DESCRIPTION

SCALE:

PROJ. NO. B25290	DESIGNED BY RMS
FILE NAME B25290F06	DRAWN BY RMS
DATE NOV, 2003	CHECKED BY NOV, 2003
SCALE AS SHOWN	FIELD NAME WMP

J-PIT PHASE II ESA
CITY OF GARY
GARY, INDIANA

DRAWING NO.

FIGURE 6
RISC SOIL AND SEDIMENT EXCEEDANCES

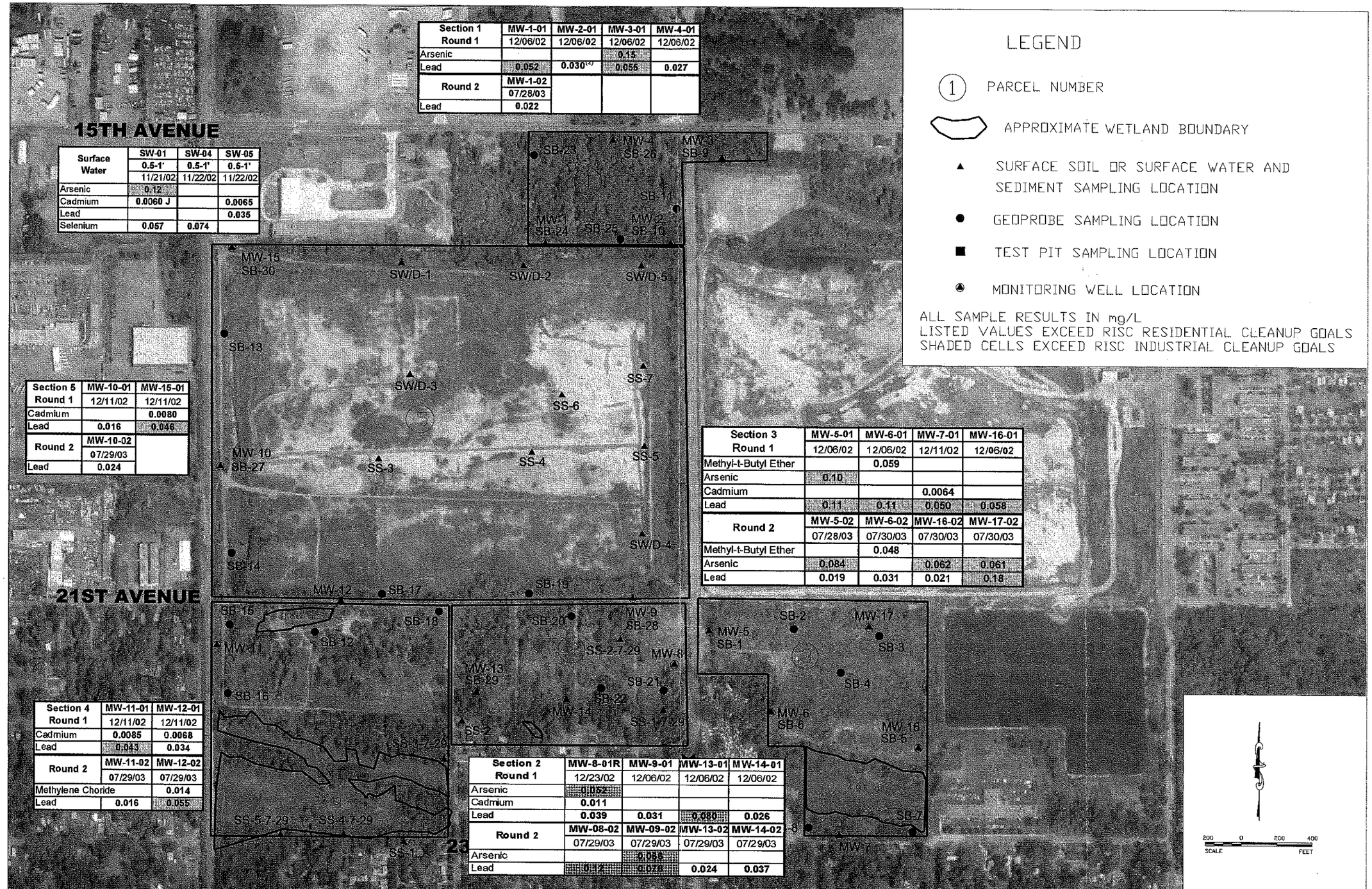

Section 1 Round 1	MW-1-01	MW-2-01	MW-3-01	MW-4-01
	12/06/02	12/06/02	12/06/02	12/06/02
Arsenic			0.15	
Lead	0.052	0.030(w)	0.055	0.027
Round 2	MW-1-02			
	07/28/03			
Lead	0.022			

Surface Water	SW-01	SW-04	SW-05
	0.5-1'	0.5-1'	0.5-1'
	11/21/02	11/22/02	11/22/02
Arsenic	0.12		
Cadmium	0.0060 J		0.0065
Lead			0.035
Selenium	0.057	0.074	

LEGEND

(1) PARCEL NUMBER

APPROXIMATE WETLAND BOUNDARY

▲ SURFACE SOIL OR SURFACE WATER AND SEDIMENT SAMPLING LOCATION

● GEOPROBE SAMPLING LOCATION

■ TEST PIT SAMPLING LOCATION

MONITORING WELL LOCATION

ALL SAMPLE RESULTS IN mg/L
LISTED VALUES EXCEED RISC RESIDENTIAL CLEANUP GOALS
SHADED CELLS EXCEED RISC INDUSTRIAL CLEANUP GOALS

Section 5 Round 1	MW-10-01	MW-15-01
	12/11/02	12/11/02
Cadmium		0.0080
Lead	0.016	0.046
Round 2	MW-10-02	
	07/29/03	
Lead	0.024	

Section 3 Round 1	MW-5-01	MW-6-01	MW-7-01	MW-16-01
	12/06/02	12/06/02	12/11/02	12/06/02
Methyl-t-Butyl Ether		0.059		
Arsenic	0.10			
Cadmium			0.0064	
Lead	0.11	0.11	0.050	0.058
Round 2	MW-5-02	MW-6-02	MW-16-02	MW-17-02
	07/28/03	07/30/03	07/30/03	07/30/03
Methyl-t-Butyl Ether		0.048		
Arsenic	0.084		0.062	0.061
Lead	0.019	0.031	0.021	0.18

Section 4 Round 1	MW-11-01	MW-12-01
	12/11/02	12/11/02
Cadmium	0.0085	0.0068
Lead	0.043	0.034
Round 2	MW-11-02	MW-12-02
	07/29/03	07/29/03
Methylene Choride		0.014
Lead	0.016	0.055

Section 2 Round 1	MW-8-01R	MW-9-01	MW-13-01	MW-14-01
	12/23/02	12/06/02	12/06/02	12/06/02
Arsenic	0.052			
Cadmium	0.011			
Lead	0.039	0.031	0.080	0.026
Round 2	MW-08-02	MW-09-02	MW-13-02	MW-14-02
	07/29/03	07/29/03	07/29/03	07/29/03
Arsenic		0.085		
Lead	0.12	0.078	0.024	0.037

BASE MAP AND WETLAND DELINEATION PROVIDED BY V3 CONSULTANTS WOODRIDGE, ILLINOIS

Baker
BAKER ENVIRONMENTAL, INC.
CROWN POINT, INDIANA

REVISIONS

NO.	DATE	DESCRIPTION	NO.	DATE	DESCRIPTION

PROJ. NO. B25290	DESIGNED BY RMS
FILE NAME B25290F06	DRAWN BY RMS
DATE NOV, 2003	CHECKED BY NOV, 2003
SCALE AS SHOWN	PROJ. MGR. WMP

J-PIT PHASE II ESA
CITY OF GARY
GARY, INDIANA

FIGURE 7
SURFACE AND GROUNDWATER EXCEEDANCES

DRAWING NO.

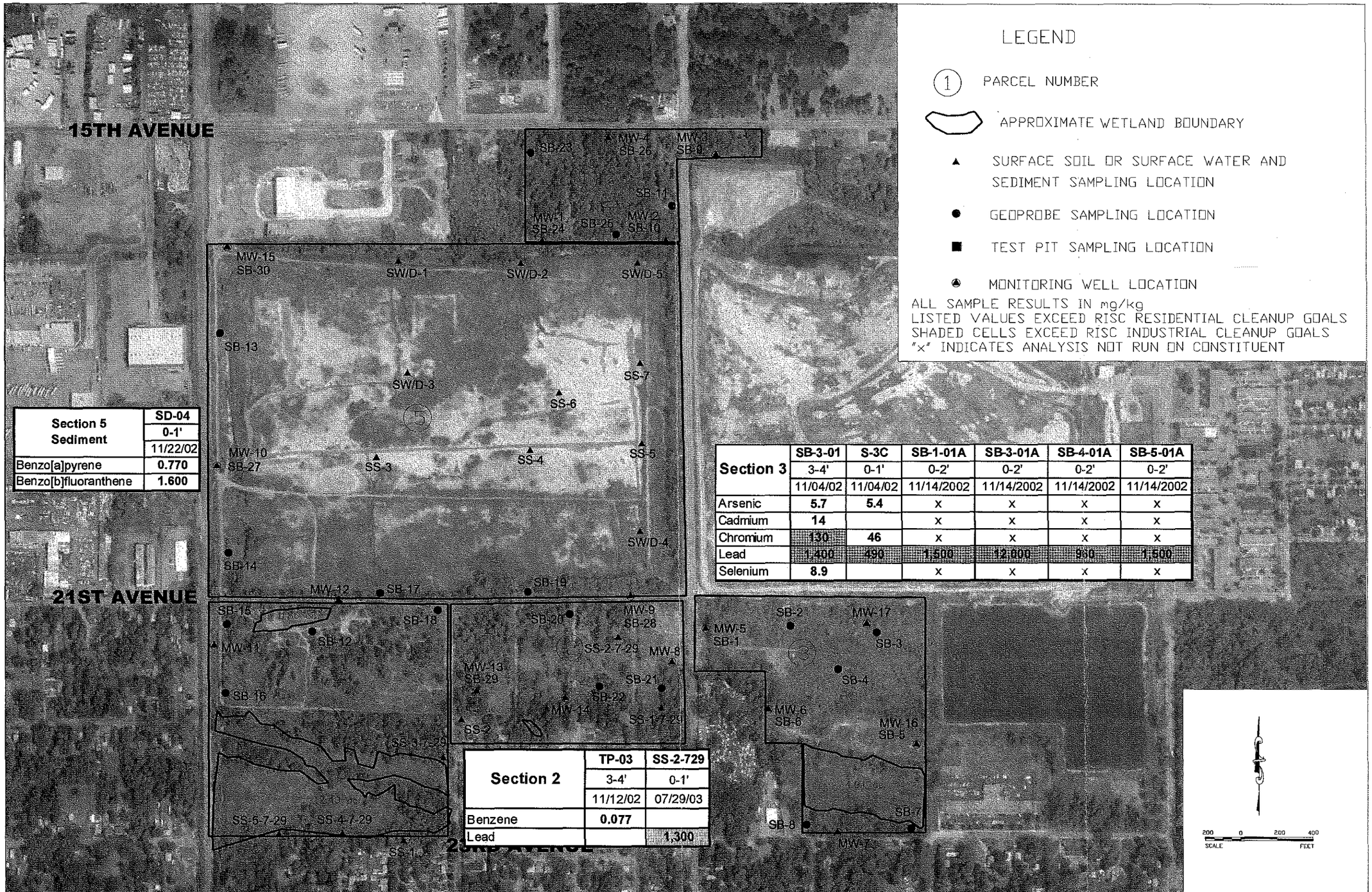

LEGEND

(1) PARCEL NUMBER

APPROXIMATE WETLAND BOUNDARY

▲ SURFACE SOIL OR SURFACE WATER AND SEDIMENT SAMPLING LOCATION

● GEOPROBE SAMPLING LOCATION

■ TEST PIT SAMPLING LOCATION

MONITORING WELL LOCATION

ALL SAMPLE RESULTS IN mg/kg
LISTED VALUES EXCEED RISC RESIDENTIAL CLEANUP GOALS
SHADED CELLS EXCEED RISC INDUSTRIAL CLEANUP GOALS
"x" INDICATES ANALYSIS NOT RUN ON CONSTITUENT

Section 5 Sediment	SD-04	
	0-1'	
	11/22/02	
Benzo[a]pyrene	0.770	
Benzo[b]fluoranthene	1.600	

Section 3	SB-3-01	S-3C	SB-1-01A	SB-3-01A	SB-4-01A	SB-5-01A
	3-4'	0-1'	0-2'	0-2'	0-2'	0-2'
	11/04/02	11/04/02	11/14/2002	11/14/2002	11/14/2002	11/14/2002
Arsenic	5.7	5.4	x	x	x	x
Cadmium	14		x	x	x	x
Chromium	130	46	x	x	x	x
Lead	1,400	490	1,500	12,000	900	1,500
Selenium	8.9		x	x	x	x

Section 2	TP-03	SS-2-729
	3-4'	0-1'
	11/12/02	07/29/03
Benzene	0.077	
Lead		1,300

BASE MAP AND WETLAND DELINEATION PROVIDED BY V3 CONSULTANTS WOODRIDGE, ILLINOIS

Baker
BAKER ENVIRONMENTAL, INC.
CROWN POINT, INDIANA

REVISIONS

NO.	DATE	DESCRIPTION	NO.	DATE	DESCRIPTION

SEAL:

PROJ. NO. B25290 | DESIGNED BY RMS
FILE NAME B25290F08 | DRAWN BY WMP
DATE NOV, 2003 | CHECKED BY JDP
SCALE AS SHOWN | FIELD MAN. WMP

J-PIT PHASE II ESA
CITY OF GARY
GARY, INDIANA

FIGURE 8
VRP SOIL AND SEDIMENT EXCEEDANCES

DRAWING NO.

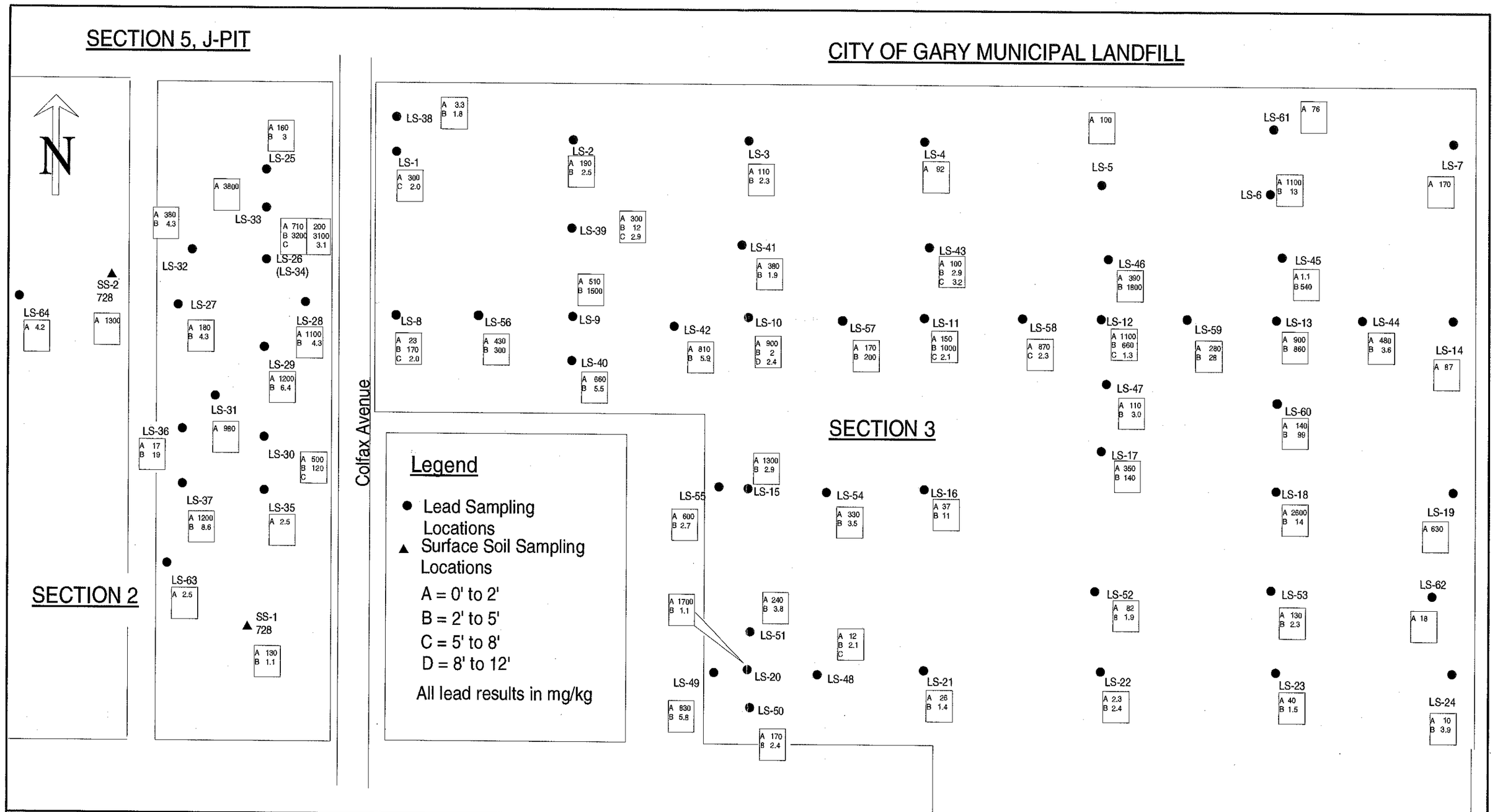

Drawn: RMS **Reviewed: JDP** **11-25-03** **Not to Scale**	**J-Pit Phase II ESA** **City of Gary** **Gary Indiana**	**BAKER ENVIRONMENTAL** **CROWN POINT, INDIANA**	**Figure 9**	**Section 2/3** **Former Pauls Auto Salvage Yard** **Soil Sampling for Lead Results**

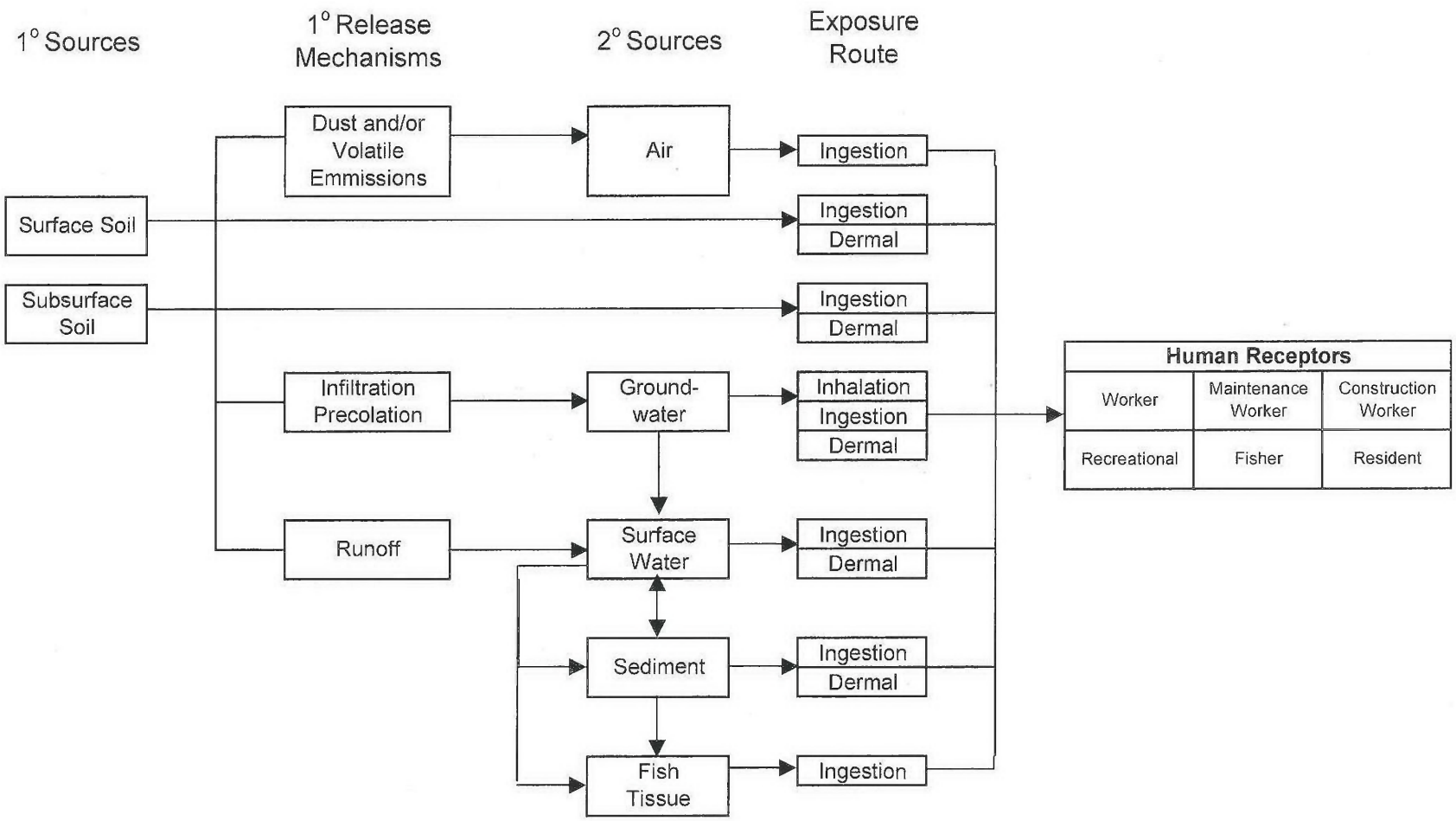

Figure 10

Conceptual Site Model
Human Health Risk Evaluation
J-PIT Redevelopment Site

Baker

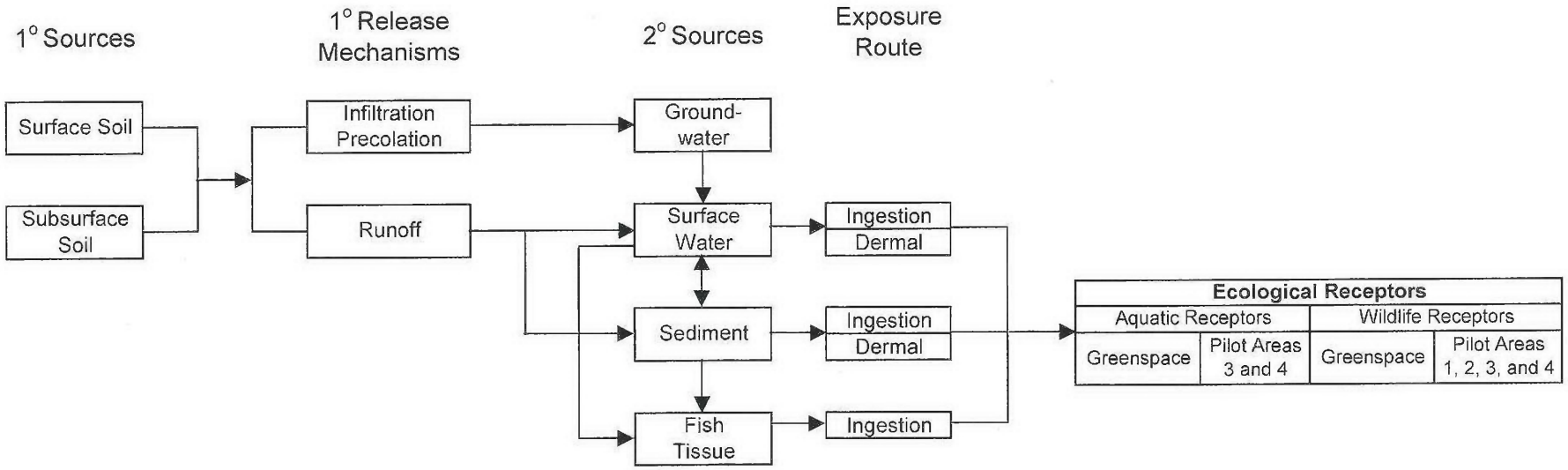

Figure 11

Conceptual Site Model
Ecological Risk Evaluation
J-PIT Redevelopment Site

Baker

APPENDIX A

Boring Logs / Well Construction Diagrams

Baker
Baker Environmental

TEST BORING AND WELL CONSTRUCTION RECORD

PROJECT:	City of Gary J-Pit Phase II Investigation		
PROJECT NO.:	24989-0-0-00100	BORING NAME:	MW-2
COORDINATES: EAST:	2862471.31	NORTH:	2308756.20
ELEVATION: SURFACE:	609.10	DIAMETER: (inches)	

Rig: Geoprobe 5400	Split Spoon	Casing	Augers	Core Barrel	Date	Progress (Ft.)	Weather	Depth to Water (Ft.)
Size (ID)		NA	NA	NA	11/14/02	29.5	Rain, 40's	24.0
Length	4.0"							
Type	NA							
Hammer Wt.	NA							
Fall	NA							

Remarks:

SAMPLE TYPE
S = Split Spoon A = Auger
T = Shelby Tube W = Wash
R = Air Rotary C = Core
D = Denison P = Piston
N = No Sample

DEFINITIONS
SPT = Standard Penetration Test (ASTM D1586)
PID = Photo Ionization Detector Measurement
MSL = Mean Sea Level
BG/PS = Background/Point Source
ppm = parts per million

Depth (Ft.)		Sample Type & No.	Sample Rec. (Ft.,%)	SPT	USCS CODES	PID (ppm) ps/bg	Visual Description	Bore Detail	Elevation (Ft. MSL)
1							See SB-10 for Lithology.		608.10
2									607.10
3									606.10
4	4.0								605.10
5									604.10
6									603.10
7									602.10
8	8.0								601.10
9									600.10
10									599.10

DRILLING CO.:	Envirodynamics	BAKER REP.:	Rick Spitaler
DRILLER:	Gregg Kolibowski	BORING NO.:	MW-2 SHEET 1 OF 2

Baker
Baker Environmental

TEST BORING AND WELL CONSTRUCTION RECORD

PROJECT: City of Gary J-Pit Phase II Investigation
PROJECT NO.: 25290-000-0000 BORING NO.: MW-2

SAMPLE TYPE
S = Split Spoon A = Auger
T = Shelby Tube W = Wash
R = Air Rotary C = Core
D = Denison P = Piston N = No Sample

DEFINITIONS
SPT = Standard Penetration Test (ASTM D1586)
PID = Photo Ionization Detector Measurement
MSL = Mean Sea Level
ps/bg = point source/background

Depth (Ft.)		Sample Type & No.	Sample Rec. (Ft.,%)	SPT	USCS CODES	PID (ppm) ps/bg	Visual Description	Bore Detail	Elevation (Ft. MSL)
11									598.10
12	12.0								597.10
13									596.10
14									595.10
15									594.10
16	16.0								593.10
17									592.10
18									591.10
19									590.10
20	20.0								589.10
21									588.10
22									587.10
23									586.10
24	24.0								585.10
25									584.10
26									583.10
27									582.10
28	28.0						28.0'		581.10
29							Blind Drill to Depth. 29.5'		580.10
30							End of Boring at 29.5'.		579.10

DRILLING CO.: Envirodynamics BAKER REP.: Rick Spitaler
DRILLER: Gregg Kolibowski BORING NO.: MW-2 SHEET 2 OF 2

Baker
Baker Environmental

TEST BORING AND WELL CONSTRUCTION RECORD

PROJECT: City of Gary J-Pit Phase II Investigation
PROJECT NO.: 24989-0-0-00100 BORING NAME: MW-3
COORDINATES: EAST: 2862744.80 NORTH: 2309283.20
ELEVATION: SURFACE: 602.70 DIAMETER: (inches)

Rig: Geoprobe 5400	Split Spoon	Casing	Augers	Core Barrel	Date	Progress (Ft.)	Weather	Depth to Water (Ft.)
Size (ID)		NA	NA	NA	11/14/02	23.5	Overcast, 40's	16.0
Length	4.0"							
Type	NA							
Hammer Wt.	NA							
Fall	NA							

Remarks:

SAMPLE TYPE
S = Split Spoon A = Auger
T = Shelby Tube W = Wash
R = Air Rotary C = Core
D = Denison P = Piston
N = No Sample

DEFINITIONS
SPT = Standard Penetration Test (ASTM D1586)
PID = Photo Ionization Detector Measurement
MSL = Mean Sea Level
BG/PS = Background/Point Source
ppm = parts per million

Depth (Ft.)		Sample Type & No.	Sample Rec. (Ft.,%)	SPT	USCS CODES	PID (ppm) ps/bg	Visual Description	Bore Detail	Elevation (Ft. MSL)
1							See SB-9 for Lithology.		601.70
2									600.70
3									599.70
4	4.0								598.70
5									597.70
6									596.70
7									595.70
8	8.0								594.70
9									593.70
10									592.70

DRILLING CO.: Envirodynamics BAKER REP.: Rick Spitaler
DRILLER: Rob Morris BORING NO.: MW-3 SHEET 1 OF 2

Baker
Baker Environmental

TEST BORING AND WELL CONSTRUCTION RECORD

PROJECT: City of Gary J-Pit Phase II Investigation
PROJECT NO.: 25290-000-0000 BORING NO.: MW-3

SAMPLE TYPE
S = Split Spoon A = Auger
T = Shelby Tube W = Wash
R = Air Rotary C = Core
D = Denison P = Piston N = No Sample

DEFINITIONS
SPT = Standard Penetration Test (ASTM D1586)
PID = Photo Ionization Detector Measurement
MSL = Mean Sea Level
ps/bg = point source/background

Depth (Ft.)		Sample Type & No.	Sample Rec. (Ft.,%)	SPT	USCS CODES	PID (ppm) ps/bg	Visual Description	Bore Detail	Elevation (Ft. MSL)
11									591.70
12	12.0								590.70
13									589.70
14									588.70
15									587.70
16	16.0								586.70
17									585.70
18									584.70
19									583.70
20	20.0						20.0'		582.70
21							Blind Drill to Depth.		581.70
22									580.70
23									579.70
24							23.5' End of Boring at 23.5'		578.70
25									577.70
26									576.70
27									575.70
28									574.70
29									573.70
30									572.70

DRILLING CO.: Envirodynamics BAKER REP.: Rick Spitaler
DRILLER: Rob Morris BORING NO.: MW-3 SHEET 2 OF 2

Baker
Baker Environmental

TEST BORING AND WELL CONSTRUCTION RECORD

PROJECT: City of Gary J-Pit Phase II Investigation
PROJECT NO.: 24989-0-0-00100 BORING NAME: MW-5
COORDINATES: EAST: 2862676.740 NORTH: 2306629.830
ELEVATION: SURFACE: 609.10 DIAMETER: (inches)

Rig: Geoprobe 5400	Split Spoon	Casing	Augers	Core Barrel	Date	Progress (Ft.)	Weather	Depth to Water (Ft.)
Size (ID)		NA	NA	NA	11/04/02	14.5	Overcast, 40's	8.0
Length	4.0"							
Type	NA							
Hammer Wt.	NA							
Fall	NA							

Remarks:

SAMPLE TYPE
S = Split Spoon A = Auger
T = Shelby Tube W = Wash
R = Air Rotary C = Core
D = Denison P = Piston
N = No Sample

DEFINITIONS
SPT = Standard Penetration Test (ASTM D1586)
PID = Photo Ionization Detector Measurement
MSL = Mean Sea Level
BG/PS = Background/Point Source
ppm = parts per million

Depth (Ft.)		Sample Type & No.	Sample Rec. (Ft.,%)	SPT	USCS CODES	PID (ppm) ps/bg	Visual Description	Bore Detail	Elevation (Ft. MSL)
1							See SB-1 for Lithology.		608.10
2									607.10
3									606.10
4	4.0								605.10
5									604.10
6									603.10
7									602.10
8	8.0								601.10
9									600.10
10									599.10

DRILLING CO.: Envirodynamics BAKER REP.: Rick Spitaler
DRILLER: Rob Morris BORING NO.: MW-5 SHEET 1 OF 2

Baker
Baker Environmental

TEST BORING AND WELL CONSTRUCTION RECORD

PROJECT: City of Gary J-Pit Phase II Investigation
PROJECT NO.: 25290-000-0000 BORING NO.: MW-5

SAMPLE TYPE
S = Split Spoon A = Auger
T = Shelby Tube W = Wash
R = Air Rotary C = Core
D = Denison P = Piston N = No Sample

DEFINITIONS
SPT = Standard Penetration Test (ASTM D1586)
PID = Photo Ionization Detector Measurement
MSL = Mean Sea Level
ps/bg = point source/background

Depth (Ft.)	Sample Type & No.	Sample Rec. (Ft.,%)	SPT	USCS CODES	PID (ppm) ps/bg	Visual Description	Bore Detail	Elevation (Ft. MSL)
11								598.10
12	12.0					12.0'		597.10
13						Blind Drill to Depth.		596.10
14								595.10
15						14.5' End of Boring at 14.5'.		594.10
16								593.10
17								592.10
18								591.10
19								590.10
20								589.10
21								588.10
22								587.10
23								586.10
24								585.10
25								584.10
26								583.10
27								582.10
28								581.10
29								580.10
30								579.10

DRILLING CO.: Envirodynamics BAKER REP.: Rick Spitaler
DRILLER: Rob Morris BORING NO.: MW-5 SHEET 2 OF 2

Baker
Baker Environmental

TEST BORING AND WELL CONSTRUCTION RECORD

PROJECT:	City of Gary J-Pit Phase II Investigation		
PROJECT NO.:	24989-0-0-00100	BORING NAME:	MW-6
COORDINATES:	EAST: 2863029.21	NORTH:	2306178.70
ELEVATION:	SURFACE: 607.50	DIAMETER: (inches)	

Rig: Geoprobe 5400	Split Spoon	Casing	Augers	Core Barrel	Date	Progress (Ft.)	Weather	Depth to Water (Ft.)
Size (ID)		NA	NA	NA	11/15/02	13.5	Overcast, 40's	7.0
Length	4.0"							
Type	NA							
Hammer Wt.	NA							
Fall	NA							

Remarks:

SAMPLE TYPE
S = Split Spoon A = Auger
T = Shelby Tube W = Wash
R = Air Rotary C = Core
D = Denison P = Piston
N = No Sample

DEFINITIONS
SPT = Standard Penetration Test (ASTM D1586)
PID = Photo Ionization Detector Measurement
MSL = Mean Sea Level
BG/PS = Background/Point Source
ppm = parts per million

Depth (Ft.)	Sample Type & No.	Sample Rec. (Ft.,%)	SPT	USCS CODES	PID (ppm) ps/bg	Visual Description	Bore Detail	Elevation (Ft. MSL)
1						See Lithology for SB-6.		606.50
2								605.50
3								604.50
4	4.0							603.50
5								602.50
6								601.50
7								600.50
8	8.0					8.0'		599.50
9						Blind Drill to Depth.		598.50
10								597.50

DRILLING CO.:	Envirodynamics	BAKER REP.:	Rick Spitaler
DRILLER:	Rob Morris	BORING NO.:	MW-6 SHEET 1 OF 2

Baker
Baker Environmental

TEST BORING AND WELL CONSTRUCTION RECORD

PROJECT: City of Gary J-Pit Phase II Investigation
PROJECT NO.: 25290-000-0000 BORING NO.: MW-6

SAMPLE TYPE
S = Split Spoon A = Auger
T = Shelby Tube W = Wash
R = Air Rotary C = Core
D = Denison P = Piston N = No Sample

DEFINITIONS
SPT = Standard Penetration Test (ASTM D1586)
PID = Photo Ionization Detector Measurement
MSL = Mean Sea Level
ps/bg = point source/background

Depth (Ft.)	Sample Type & No.	Sample Rec. (Ft.,%)	SPT	USCS CODES	PID (ppm) ps/bg	Visual Description	Bore Detail	Elevation (Ft. MSL)
11								598.10
12	12.0							597.10
13								596.10
14						13.5' End of Boring at 13.5'		595.10
15								594.10
16								593.10
17								592.10
18								591.10
19								590.10
20								589.10
21								588.10
22								587.10
23								586.10
24								585.10
25								584.10
26								583.10
27								582.10
28								581.10
29								580.10
30								579.10

DRILLING CO.: Envirodynamics BAKER REP.: Rick Spitaler
DRILLER: Rob Morris BORING NO.: MW-6 SHEET 1 OF 2

Baker
Baker Environmental

TEST BORING AND WELL CONSTRUCTION RECORD

PROJECT:	City of Gary J-Pit Phase II Investigation		
PROJECT NO.:	24989-0-0-00100	BORING NAME:	MW-7
COORDINATES:	EAST: 2863413.080	NORTH:	2305491.910
ELEVATION:	SURFACE: 605.90	DIAMETER: (inches)	

Rig: Geoprobe 5400	Split Spoon	Casing	Augers	Core Barrel	Date	Progress (Ft.)	Weather	Depth to Water (Ft.)
Size (ID)		NA	NA	NA	11/15/02	12.0	Partly Cloudy, 30's	5.5
Length	4.0"							
Type	NA							
Hammer Wt.	NA							
Fall	NA							

Remarks:

SAMPLE TYPE
S = Split Spoon A = Auger
T = Shelby Tube W = Wash
R = Air Rotary C = Core
D = Denison P = Piston
N = No Sample

DEFINITIONS
SPT = Standard Penetration Test (ASTM D1586)
PID = Photo Ionization Detector Measurement
MSL = Mean Sea Level
BG/PS = Background/Point Source
ppm = parts per million

Depth (Ft.)		Sample Type & No.	Sample Rec. (Ft.,%)	SPT	USCS CODES	PID (ppm) ps/bg	Visual Description	Bore Detail	Elevation (Ft. MSL)
1							**TOPSOIL.** 1.0'		604.90
2		S-1	75%	NA	SP	0.0	**SAND**, fine to medium grained, trace silt; light brown; moist		603.90
3									602.90
4	4.0								601.90
5									600.90
6		S-2	80%	NA	SP	0.0	Wet.		599.90
7							7.0' **SILT**, (organic). 3.0"		598.90
8	8.0								597.90
9		S-3	75%	NA	SP	0.0	**SAND**, fine to medium grained, trace silt; light brown; moist		596.90
10									595.90

DRILLING CO.:	Paramount	BAKER REP.:	Rick Spitaler
DRILLER:	Keith Kreischer	BORING NO.:	SHEET 1 OF 2

Baker
Baker Environmental

TEST BORING AND WELL CONSTRUCTION RECORD

PROJECT: City of Gary J-Pit Phase II Investigation
PROJECT NO.: 25290-000-0000 BORING NO.: MW-7

SAMPLE TYPE
S = Split Spoon A = Auger
T = Shelby Tube W = Wash
R = Air Rotary C = Core
D = Denison P = Piston N = No Sample

DEFINITIONS
SPT = Standard Penetration Test (ASTM D1586)
PID = Photo Ionization Detector Measurement
MSL = Mean Sea Level
ps/bg = point source/background

Depth (Ft.)	Sample Type & No.	Sample Rec. (Ft.,%)	SPT	USCS CODES	PID (ppm) ps/bg	Visual Description	Bore Detail	Elevation (Ft. MSL)
11								594.90
12	12.0					12.0'		593.90
						End of Boring at 12'.		
13								592.90
14								591.90
15								590.90
16								589.90
17								588.90
18								587.90
19								586.90
20								585.90
21								584.90
22								583.90
23								582.90
24								581.90
25								580.90
26								579.90
27								578.90
28								577.90
29								576.90
30								575.90

DRILLING CO.: Paramount BAKER REP.: Rick Spitaler
DRILLER: Keith Kreischer BORING NO.: SHEET 2 OF 2

Baker
Baker Environmental

TEST BORING AND WELL CONSTRUCTION RECORD

PROJECT:	City of Gary J-Pit Phase II Investigation		
PROJECT NO.:	24989-0-0-00100	BORING NAME:	MW-8
COORDINATES:	EAST: 2862482.33	NORTH:	2306442.80
ELEVATION:	SURFACE: 607.10	DIAMETER: (inches)	

Rig: Geoprobe 5400	Split Spoon	Casing	Augers	Core Barrel	Date	Progress (Ft.)	Weather	Depth to Water (Ft.)
Size (ID)		NA	NA	NA	11/18/02	15.0	Overcast, 20's	7.5
Length	4.0"							
Type	NA							
Hammer Wt.	NA							
Fall	NA							

Remarks:

SAMPLE TYPE
S = Split Spoon A = Auger
T = Shelby Tube W = Wash
R = Air Rotary C = Core
D = Denison P = Piston
N = No Sample

DEFINITIONS
SPT = Standard Penetration Test (ASTM D1586)
PID = Photo Ionization Detector Measurement
MSL = Mean Sea Level
BG/PS = Background/Point Source
ppm = parts per million

Depth (Ft.)		Sample Type & No.	Sample Rec. (Ft.,%)	SPT	USCS CODES	PID (ppm) ps/bg	Visual Description	Bore Detail	Elevation (Ft. MSL)
1					FI		**FILL**, (slag, rock, gravel, sand).		606.10
2		S-1	65%	NA		2.1	2.0'		605.10
3					SP		**SAND**, medium grained, trace silt; yellow, dry. 3.5'		604.10
4	4.0				PT		**SILT**, (organic). 4.0"		603.10
5									602.10
6		S-2	80%	NA	SP	11.0	Light brown; moist.		601.10
7									600.10
8	8.0						Wet.		599.10
9		S-3	85%	NA	SP	16.0	Silt banding; dark grey.		598.10
10									597.10

DRILLING CO.:	Paramount	BAKER REP.:	Rick Spitaler
DRILLER:	Keith Kreischer	BORING NO.:	MW-8 SHEET 1 OF 2

Baker
Baker Environmental

TEST BORING AND WELL CONSTRUCTION RECORD

PROJECT: City of Gary J-Pit Phase II Investigation
PROJECT NO.: 25290-000-0000 BORING NO.: MW-8

SAMPLE TYPE
S = Split Spoon A = Auger
T = Shelby Tube W = Wash
R = Air Rotary C = Core
D = Denison P = Piston N = No Sample

DEFINITIONS
SPT = Standard Penetration Test (ASTM D1586)
PID = Photo Ionization Detector Measurement
MSL = Mean Sea Level
ps/bg = point source/background

Depth (Ft.)	Sample Type & No.	Sample Rec. (Ft.,%)	SPT	USCS CODES	PID (ppm) ps/bg	Visual Description	Bore Detail	Elevation (Ft. MSL)
11						**SAND**, medium grained, trace silt; light brown; moist.		596.10
12 12.0								595.10
13	S-4	60%	NA	SP	0.0			594.10
14								593.10
15 15.0						**15.0'**		592.10
16						End of Boring at 15'.		591.10
17								590.10
18								589.10
19								588.10
20								587.10
21								586.10
22								585.10
23								584.10
24								583.10
25								582.10
26								581.10
27								580.10
28								579.10
29								578.10
30								577.10

DRILLING CO.: Paramount BAKER REP.: Rick Spitaler
DRILLER: Keith Kreischer BORING NO.: MW-8 SHEET 2 OF 2

Baker

Baker Environmental

TEST BORING AND WELL CONSTRUCTION RECORD

PROJECT:	City of Gary J-Pit Phase II Investigation		
PROJECT NO.:	24989-0-0-00100	BORING NAME:	MW-11
COORDINATES:	EAST: 2859919.95	NORTH:	2306538.61
ELEVATION:	SURFACE: 607.60	DIAMETER: (inches)	

Rig: Geoprobe 5400	Split Spoon	Casing	Augers	Core Barrel	Date	Progress (Ft.)	Weather	Depth to Water (Ft.)
Size (ID)		NA	NA	NA	11/19/02	16.5	Clear, 40's	10.0
Length	4.0"							
Type	NA							
Hammer Wt.	NA							
Fall	NA							

Remarks:

SAMPLE TYPE

S = Split Spoon A = Auger
T = Shelby Tube W = Wash
R = Air Rotary C = Core
D = Denison P = Piston
N = No Sample

DEFINITIONS

SPT = Standard Penetration Test (ASTM D1586)
PID = Photo Ionization Detector Measurement
MSL = Mean Sea Level
BG/PS = Background/Point Source
ppm = parts per million

Depth (Ft.)		Sample Type & No.	Sample Rec. (Ft.,%)	SPT	USCS CODES	PID (ppm) ps/bg	Visual Description	Bore Detail	Elevation (Ft. MSL)
1							**SAND**, medium grained, little silt, little roots; brown. 1.0'		606.60
2		S-1	85%	NA	SP	0.1	**SAND**, medium grained, trace silt, light brown; loose; dry. 3.0'		605.60
3							**SILT**, (organic). 1.0"		604.60
4	4.0						**SAND**, medium grained, trace silt, light brown; loose; dry.		603.60
5									602.60
6		S-2	90%	NA	SP	0.0			601.60
7									600.60
8	8.0								599.60
9		S-3	85%	NA	SP	0.0			598.60
10							Wet.		597.60

DRILLING CO.:	Paramount	BAKER REP.:	Rick Spitaler
DRILLER:	Keith Kreischer	BORING NO.:	MW-11 SHEET 1 OF 2

Baker
Baker Environmental

TEST BORING AND WELL CONSTRUCTION RECORD

PROJECT: City of Gary J-Pit Phase II Investigation
PROJECT NO.: 25290-000-0000 BORING NO.: MW-11

SAMPLE TYPE
S = Split Spoon A = Auger
T = Shelby Tube W = Wash
R = Air Rotary C = Core
D = Denison P = Piston N = No Sample

DEFINITIONS
SPT = Standard Penetration Test (ASTM D1586)
PID = Photo Ionization Detector Measurement
MSL = Mean Sea Level
ps/bg = point source/background

Depth (Ft.)		Sample Type & No.	Sample Rec. (Ft.,%)	SPT	USCS CODES	PID (ppm) ps/bg	Visual Description	Bore Detail	Elevation (Ft. MSL)
11							**SAND**, medium grained, trace silt; light brown; dense; wet.		596.60
12	12.0								595.60
13									594.60
14		S-4	85%	NA	SP	0.0			593.60
15									592.60
16	16.0								591.60
	16.5						**16.5'**		
17							End of Boring at 16.5'.		590.60
18									589.60
19									588.60
20									587.60
21									586.60
22									585.60
23									584.60
24									583.60
25									582.60
26									581.60
27									580.60
28									579.60
29									578.60
30									577.60

DRILLING CO.: Paramount BAKER REP.: Rick Spitaler
DRILLER: Keith Kreischer BORING NO.: MW-11 SHEET 2 OF 2

Baker
Baker Environmental

TEST BORING AND WELL CONSTRUCTION RECORD

PROJECT:	City of Gary J-Pit Phase II Investigation		
PROJECT NO.:	24989-0-0-00100	BORING NAME:	MW-12
COORDINATES: EAST:	2860614.53	NORTH:	2306790.04
ELEVATION: SURFACE:	611.30	DIAMETER: (inches)	

Rig: Geoprobe 5400	Split Spoon	Casing	Augers	Core Barrel	Date	Progress (Ft.)	Weather	Depth to Water (Ft.)
Size (ID)		NA	NA	NA	11/19/02	27.0	Partly Cloudy, 50's	19.8
Length	4.0"							
Type	NA							
Hammer Wt.	NA							
Fall	NA							

Remarks:

SAMPLE TYPE
S = Split Spoon A = Auger
T = Shelby Tube W = Wash
R = Air Rotary C = Core
D = Denison P = Piston
N = No Sample

DEFINITIONS
SPT = Standard Penetration Test (ASTM D1586)
PID = Photo Ionization Detector Measurement
MSL = Mean Sea Level
BG/PS = Background/Point Source
ppm = parts per million

Depth (Ft.)		Sample Type & No.	Sample Rec. (Ft.,%)	SPT	USCS CODES	PID (ppm) ps/bg	Visual Description	Bore Detail	Elevation (Ft. MSL)
1							**TOPSOIL.** 1.0'		610.30
2		S-1	15%	NA	FI	0.1	**FILL**, (sand); orange-brown. 3.0'		609.30
3									608.30
4	4.0						**SAND**, medium grained, trace silt, disturbed; light brown; dense; dry.		607.30
5									606.30
6		S-2	70%	NA	FI	0.1			605.30
7							7.0'		604.30
8	8.0						**SILT**, (organic), some fine grained sand; dark brown; dry. 3.0"		603.30
9		S-3	70%	NA	SP	0.0	**SAND**, medium grained, trace silt; light brown; dense; dry.		602.30
10									601.30

DRILLING CO.:	Paramount	BAKER REP.:	Rick Spitaler
DRILLER:	Keith Kreischer	BORING NO.:	MW-12 SHEET 1 OF 2

Baker
Baker Environmental

TEST BORING AND WELL CONSTRUCTION RECORD

PROJECT: City of Gary J-Pit Phase II Investigation
PROJECT NO.: 25290-000-0000 BORING NO.: MW-12

SAMPLE TYPE
S = Split Spoon A = Auger
T = Shelby Tube W = Wash
R = Air Rotary C = Core
D = Denison P = Piston N = No Sample

DEFINITIONS
SPT = Standard Penetration Test (ASTM D1586)
PID = Photo Ionization Detector Measurement
MSL = Mean Sea Level
ps/bg = point source/background

Depth (Ft.)		Sample Type & No.	Sample Rec. (Ft.,%)	SPT	USCS CODES	PID (ppm) ps/bg	Visual Description	Bore Detail	Elevation (Ft. MSL)
11							**SAND**, medium grained, trace silt; light brown; dense; dry.		600.30
12	12.0								599.30
13									598.30
14		S-4	75%	NA	SP	0.0			597.30
15									596.30
16	16.0								595.30
17									594.30
18		S-5	65%	NA	SP	0.0			593.30
19									592.30
20	20.0						Yellow; wet.		591.30
21									590.30
22		S-6	60%	NA	SP	0.0	Grey.		589.30
23									588.30
24	24.0								587.30
25									586.30
26		S-7	100%	NA	SP	0.0			585.30
27	27.0						**27.0'**		584.30
28							End of Boring at 27'.		583.30
29									582.30
30									581.30

DRILLING CO.: Paramount BAKER REP.: Rick Spitaler
DRILLER: Keith Kreischer BORING NO.: MW-12 SHEET 2 OF 2

Baker
Baker Environmental

TEST BORING AND WELL CONSTRUCTION RECORD

PROJECT:	City of Gary J-Pit Phase II Investigation		
PROJECT NO.:	24989-0-0-00100	BORING NAME:	MW-14
COORDINATES:	EAST: 2861878.63	NORTH:	2306242.17
ELEVATION:	SURFACE: 607.20	DIAMETER: (inches)	

Rig: Geoprobe 5400	Split Spoon	Casing	Augers	Core Barrel	Date	Progress (Ft.)	Weather	Depth to Water (Ft.)
Size (ID)		NA	NA	NA	11/20/02	16.5	Overcast / 40's	10.0
Length	4.0"							
Type	NA							
Hammer Wt.	NA							
Fall	NA							

Remarks:

SAMPLE TYPE
S = Split Spoon A = Auger
T = Shelby Tube W = Wash
R = Air Rotary C = Core
D = Denison P = Piston
N = No Sample

DEFINITIONS
SPT = Standard Penetration Test (ASTM D1586)
PID = Photo Ionization Detector Measurement
MSL = Mean Sea Level
BG/PS = Background/Point Source
ppm = parts per million

Depth (Ft.)		Sample Type & No.	Sample Rec. (Ft.,%)	SPT	USCS CODES	PID (ppm) ps/bg	Visual Description	Bore Detail	Elevation (Ft. MSL)
1					FI		**TOPSOIL**, root, leaves, sand, disturbed.		606.20
2		S-1	65%	NA		0.0			605.20
3							3.0'		604.20
					SP				
4	4.0						**SAND**, medium grained, trace silt; light brown; loose; dry.		603.20
5									602.20
6		S-2	80%	NA	SP	0.0			601.20
7									600.20
8	8.0								599.20
9		S-3	80%	NA	SP	0.0			598.20
10							Wet.		597.20

DRILLING CO.:	Paramount	BAKER REP.:	Rick Spitaler
DRILLER:	Keith Kreischer	BORING NO.:	MW-14 SHEET 1 OF 2

Baker
Baker Environmental

TEST BORING AND WELL CONSTRUCTION RECORD

PROJECT: City of Gary J-Pit Phase II Investigation
PROJECT NO.: 25290-000-0000 BORING NO.: MW-14

SAMPLE TYPE
S = Split Spoon A = Auger
T = Shelby Tube W = Wash
R = Air Rotary C = Core
D = Denison P = Piston N = No Sample

DEFINITIONS
SPT = Standard Penetration Test (ASTM D1586)
PID = Photo Ionization Detector Measurement
MSL = Mean Sea Level
ps/bg = point source/background

Depth (Ft.)		Sample Type & No.	Sample Rec. (Ft.,%)	SPT	USCS CODES	PID (ppm) ps/bg	Visual Description	Bore Detail	Elevation (Ft. MSL)
11							**SAND**, medium grained, trace silt; light brown, banding; dense; wet.		596.20
12	12.0								595.20
13									594.20
14		S-4	80%	NA	SP	0.0			593.20
15									592.20
16	16.0								591.20
	16.5						16.5'		
17							End of Boring at 16.5'.		590.20
18									589.20
19									588.20
20									587.20
21									586.20
22									585.20
23									584.20
24									583.20
25									582.20
26									581.20
27									580.20
28									579.20
29									578.20
30									577.20

DRILLING CO.: Paramount BAKER REP.: Rick Spitaler
DRILLER: Keith Kreischer BORING NO.: MW-14 SHEET 2 OF 2

Baker

Baker Environmental

TEST BORING AND WELL CONSTRUCTION RECORD

PROJECT:	City of Gary J-Pit Phase II Investigation		
PROJECT NO.:	24989-0-0-00100	BORING NAME:	MW-16
COORDINATES:	EAST: 2863797.15	NORTH:	2305980.99
ELEVATION:	SURFACE: 606.60	DIAMETER: (inches)	

Rig: Geoprobe 5400	Split Spoon	Casing	Augers	Core Barrel	Date	Progress (Ft.)	Weather	Depth to Water (Ft.)
Size (ID)		NA	NA	NA	11/21/02	12.0	Overcast, 40's	3.5
Length	4.0"							
Type	NA							
Hammer Wt.	NA							
Fall	NA							

Remarks:

SAMPLE TYPE

S = Split Spoon A = Auger
T = Shelby Tube W = Wash
R = Air Rotary C = Core
D = Denison P = Piston
N = No Sample

DEFINITIONS

SPT = Standard Penetration Test (ASTM D1586)
PID = Photo Ionization Detector Measurement
MSL = Mean Sea Level
BG/PS = Background/Point Source
ppm = parts per million

Depth (Ft.)	Sample Type & No.	Sample Rec. (Ft.,%)	SPT	USCS CODES	PID (ppm) ps/bg	Visual Description	Bore Detail	Elevation (Ft. MSL)
1						See SB-5 for Lithology.		605.60
2								604.60
3								603.60
4	4.0						4.0'	602.60
5						Blind Drill to Depth.		601.60
6								600.60
7								599.60
8	8.0							598.60
9								597.60
10								596.60

DRILLING CO.:	Envirodynamics	BAKER REP.:	Rick Spitaler
DRILLER:	Rob Morris	BORING NO.:	MW-16 SHEET 1 OF 1

Baker
Baker Environmental

TEST BORING AND WELL CONSTRUCTION RECORD

PROJECT: City of Gary J-Pit Phase II Investigation
PROJECT NO.: 25290-000-0000 BORING NO.: MW-16

SAMPLE TYPE
S = Split Spoon A = Auger
T = Shelby Tube W = Wash
R = Air Rotary C = Core
D = Denison P = Piston N = No Sample

DEFINITIONS
SPT = Standard Penetration Test (ASTM D1586)
PID = Photo Ionization Detector Measurement
MSL = Mean Sea Level
ps/bg = point source/background

Depth (Ft.)		Sample Type & No.	Sample Rec. (Ft.,%)	SPT	USCS CODES	PID (ppm) ps/bg	Visual Description	Bore Detail	Elevation (Ft. MSL)
11									596.10
12	12.0						12.0'		595.10
							End of Boring at 12'.		
13									594.10
14									593.10
15									592.10
16									591.10
17									590.10
18									589.10
19									588.10
20									587.10
21									586.10
22									585.10
23									584.10
24									583.10
25									582.10
26									581.10
27									580.10
28									579.10
29									578.10
30									577.10

DRILLING CO.: Envirodynamics BAKER REP.: Rick Spitaler
DRILLER: Rob Morris BORING NO.: MW-16 SHEET 1 OF 1

Baker
Baker Environmental

TEST BORING AND WELL CONSTRUCTION RECORD

PROJECT:	City of Gary J-Pit Phase II Investigation		
PROJECT NO.:	24989-0-0-00100	BORING NAME:	MW-17
COORDINATES: EAST:	2863577.54	NORTH:	2306655.79
ELEVATION: SURFACE:	608.10	DIAMETER: (inches)	

Rig: Geoprobe 5400	Split Spoon	Casing	Augers	Core Barrel	Date	Progress (Ft.)	Weather	Depth to Water (Ft.)
Size (ID)		NA	NA	NA		12.5		3.0
Length	4.0"							
Type	NA							
Hammer Wt.	NA							
Fall	NA							

Remarks:

SAMPLE TYPE
S = Split Spoon A = Auger
T = Shelby Tube W = Wash
R = Air Rotary C = Core
D = Denison P = Piston
N = No Sample

DEFINITIONS
SPT = Standard Penetration Test (ASTM D1586)
PID = Photo Ionization Detector Measurement
MSL = Mean Sea Level
BG/PS = Background/Point Source
ppm = parts per million

Depth (Ft.)		Sample Type & No.	Sample Rec. (Ft.,%)	SPT	USCS CODES	PID (ppm) ps/bg	Visual Description	Bore Detail	Elevation (Ft. MSL)
1							**FILL**, (gravel, sand, tire fragments), disturbed.		607.10
2		S-1	70%	NA	SP	0.0			606.10
							2.5'		
3							**SAND**; banding; wet.		605.10
							3.5'		
4	4.0								604.10
							SAND, fine grained, trace silt; light brown; wet.		
5									603.10
6		S-2	70%	NA	SP	0.0			602.10
7									601.10
8	8.0								600.10
9		S-3	70%	NA	SP	0.0			599.10
10									598.10

DRILLING CO.:	Paramount	BAKER REP.:	Rick Spitaler
DRILLER:	Keith Kreischer	BORING NO.:	MW-17 SHEET 1 OF 2

Baker
Baker Environmental

TEST BORING AND WELL CONSTRUCTION RECORD

PROJECT: City of Gary J-Pit Phase II Investigation
PROJECT NO.: 25290-000-0000 BORING NO.: MW-17

SAMPLE TYPE
S = Split Spoon A = Auger
T = Shelby Tube W = Wash
R = Air Rotary C = Core
D = Denison P = Piston N = No Sample

DEFINITIONS
SPT = Standard Penetration Test (ASTM D1586)
PID = Photo Ionization Detector Measurement
MSL = Mean Sea Level
ps/bg = point source/background

Depth (Ft.)		Sample Type & No.	Sample Rec. (Ft.,%)	SPT	USCS CODES	PID (ppm) ps/bg	Visual Description	Bore Detail	Elevation (Ft. MSL)
11									597.10
12	12.0								596.10
	12.5						12.5'		
13							End of Boring at 12.5'.		595.10
14									594.10
15									593.10
16									592.10
17									591.10
18									590.10
19									589.10
20									588.10
21									587.10
22									586.10
23									585.10
24									584.10
25									583.10
26									582.10
27									581.10
28									580.10
29									579.10
30									578.10

DRILLING CO.: Paramount BAKER REP.: Rick Spitaler
DRILLER: Keith Kreischer BORING NO.: MW-17 SHEET 2 OF 2

Baker
Baker Environmental

TEST BORING AND WELL CONSTRUCTION RECORD

PROJECT:	City of Gary J-Pit Phase II Investigation		
PROJECT NO.:	24989-0-0-00100	BORING NAME:	SB-1
COORDINATES:	EAST: 2862676.740	NORTH:	2306629.830
ELEVATION:	SURFACE: 609.10	DIAMETER: (inches)	

Rig: Geoprobe 5400	Split Spoon	Casing	Augers	Core Barrel	Date	Progress (Ft.)	Weather	Depth to Water (Ft.)
Size (ID)		NA	NA	NA	11/04/02	12.0	Overcast, 40's	8.0
Length	4.0"							
Type	NA							
Hammer Wt.	NA							
Fall	NA							

Remarks:

SAMPLE TYPE
S = Split Spoon A = Auger
T = Shelby Tube W = Wash
R = Air Rotary C = Core
D = Denison P = Piston
N = No Sample

DEFINITIONS
SPT = Standard Penetration Test (ASTM D1586)
PID = Photo Ionization Detector Measurement
MSL = Mean Sea Level
BG/PS = Background/Point Source
ppm = parts per million

Depth (Ft.)	Sample Type & No.	Sample Rec. (Ft.,%)	SPT	USCS CODES	PID (ppm) ps/bg	Visual Description	Bore Detail	Elevation (Ft. MSL)
				FI	1.2	**FILL**, (gravel, plastic, concrete). 4.0"		
1								608.10
2	S-1	75%	NA	SP	2.1	**SAND**, medium grained, trace silt; light brown; moist.		607.10
3						Collected SB-1 at 2 to 3'.		606.10
4	4.0							605.10
5					1.1			604.10
6	S-2	80%	NA	SP				603.10
7								602.10
8	8.0				1.0	Shell fragments; wet.		601.10
9	S-3	70%	NA	SP	0.1	9.5'		600.10
10						**SILT**, fine grained sand, organics. 1.0"		599.10

DRILLING CO.:	Envirodynamics	BAKER REP.:	RMS
DRILLER:	Rob Morris	BORING NO.:	SB-1 SHEET 1 OF 2

Baker
Baker Environmental

TEST BORING AND WELL CONSTRUCTION RECORD

PROJECT: City of Gary J-Pit Phase II Investigation
PROJECT NO.: 25290-000-0000 BORING NO.: SB-1

SAMPLE TYPE
S = Split Spoon A = Auger
T = Shelby Tube W = Wash
R = Air Rotary C = Core
D = Denison P = Piston N = No Sample

DEFINITIONS
SPT = Standard Penetration Test (ASTM D1586)
PID = Photo Ionization Detector Measurement
MSL = Mean Sea Level
ps/bg = point source/background

Depth (Ft.)	Sample Type & No.	Sample Rec. (Ft.,%)	SPT	USCS CODES	PID (ppm) ps/bg	Visual Description	Bore Detail	Elevation (Ft. MSL)
11						**SAND**, medium grained, trace silt; light brown; moist.		598.10
12	12.0					**12.0'**		597.10
						End of Boring at 12'.		
13								596.10
14								595.10
15								594.10
16								593.10
17								592.10
18								591.10
19								590.10
20								589.10
21								588.10
22								587.10
23								586.10
24								585.10
25								584.10
26								583.10
27								582.10
28								581.10
29								580.10
30								579.10

DRILLING CO.: Envirodynamics BAKER REP.: RMS
DRILLER: Rob Morris BORING NO.: SB-1 SHEET 2 OF 2

Baker

Baker Environmental

TEST BORING AND WELL CONSTRUCTION RECORD

PROJECT:	City of Gary J-Pit Phase II Investigation		
PROJECT NO.:	24989-0-0-00100	BORING NAME:	SB-2
COORDINATES: EAST:	87 24 629	NORTH:	41 34 844
ELEVATION: SURFACE:		DIAMETER: (inches)	

Rig: Geoprobe 5400	Split Spoon	Casing	Augers	Core Barrel	Date	Progress (Ft.)	Weather	Depth to Water (Ft.)
Size (ID)		NA	NA	NA	11/04/02	8.0	Overcast, 40's	7.8
Length	4.0"							
Type	NA							
Hammer Wt.	NA							
Fall	NA							

Remarks:

SAMPLE TYPE

S = Split Spoon A = Auger
T = Shelby Tube W = Wash
R = Air Rotary C = Core
D = Denison P = Piston
N = No Sample

DEFINITIONS

SPT = Standard Penetration Test (ASTM D1586)
PID = Photo Ionization Detector Measurement
MSL = Mean Sea Level
BG/PS = Background/Point Source
ppm = parts per million

Depth (Ft.)	Sample Type & No.	Sample Rec. (Ft.,%)	SPT	USCS CODES	PID (ppm) ps/bg	Visual Description	Bore Detail	Elevation (Ft. MSL)
1				FI		**FILL**, (sand, little silt, roots, plastic). 1.0'		
2	C-1	70%	NA	SP		**SAND**, medium grained, trace silt; light brown; dry.		
3								
4	4.0							
5								
6	C-2	65%	NA	SP				
7						Collected SB-2 at 6 to 7'.		
8	8.0					Wet. 8.0'		
9						End of Boring at 8'.		
10								

DRILLING CO.:	Envirodynamics	BAKER REP.:	Rick Spitaler
DRILLER:	Rob Morris	BORING NO.:	SB-2 SHEET 1 OF 1

Baker

Baker Environmental

TEST BORING AND WELL CONSTRUCTION RECORD

PROJECT:	City of Gary J-Pit Phase II Investigation		
PROJECT NO.:	24989-0-0-00100	BORING NAME:	SB-3
COORDINATES:	EAST: 87 24 554	NORTH:	41 34 820
ELEVATION:	SURFACE:	DIAMETER: (inches)	

Rig: Geoprobe 5400								
	Split Spoon	Casing	Augers	Core Barrel	Date	Progress (Ft.)	Weather	Depth to Water (Ft.)
Size (ID)		NA	NA	NA	11/04/02	8.0	Overcast, 40's	5.0
Length	4.0"							
Type	NA							
Hammer Wt.	NA							
Fall	NA							

Remarks:

SAMPLE TYPE

S = Split Spoon A = Auger
T = Shelby Tube W = Wash
R = Air Rotary C = Core
D = Denison P = Piston
N = No Sample

DEFINITIONS

SPT = Standard Penetration Test (ASTM D1586)
PID = Photo Ionization Detector Measurement
MSL = Mean Sea Level
BG/PS = Background/Point Source
ppm = parts per million

Depth (Ft.)		Sample Type & No.	Sample Rec. (Ft.,%)	SPT	USCS CODES	PID (ppm) ps/bg	Visual Description	Bore Detail	Elevation (Ft. MSL)
1							**FILL**, (silt, brick ceramic, wood, plaster, sand), roots; black; moist.		
2		S-1	70%	NA	FI	1.1			
3									
4	4.0						Collected SB-3 at 3 to 4'.		
5							Wet. 5.0'		
6		S-1	60%	NA	SP	0.4			
7							**SAND**, medium grained, trace silt; light brown; wet.		
8	8.0						8.0'		
9							End of Boring at 8'.		
10									

DRILLING CO.:	Envirodynamics	BAKER REP.:	Rick Spitaler
DRILLER:	Rob Morris	BORING NO.:	SB-3 SHEET 1 OF 1

Baker
Baker Environmental

TEST BORING AND WELL CONSTRUCTION RECORD

PROJECT: City of Gary J-Pit Phase II Investigation
PROJECT NO.: 24989-0-0-00100 BORING NAME: SB-4
COORDINATES: EAST: 87 24 573 NORTH: 41 34 783
ELEVATION: SURFACE: DIAMETER: (inches)

Rig: Geoprobe 5400	Split Spoon	Casing	Augers	Core Barrel	Date	Progress (Ft.)	Weather	Depth to Water (Ft.)
Size (ID)		NA	NA	NA	11/04/02	8.0	Overcast, 40's	7
Length	4.0"							
Type	NA							
Hammer Wt.	NA							
Fall	NA							

Remarks:

SAMPLE TYPE
S = Split Spoon A = Auger
T = Shelby Tube W = Wash
R = Air Rotary C = Core
D = Denison P = Piston
N = No Sample

DEFINITIONS
SPT = Standard Penetration Test (ASTM D1586)
PID = Photo Ionization Detector Measurement
MSL = Mean Sea Level
BG/PS = Background/Point Source
ppm = parts per million

Depth (Ft.)	Sample Type & No.	Sample Rec. (Ft.,%)	SPT	USCS CODES	PID (ppm) ps/bg	Visual Description	Bore Detail	Elevation (Ft. MSL)
1					0.0	**FILL**, (silt, brick, tire, metal, wood), roots.		
2	S-1	40%	NA	FI		Increase of sand with depth.		
3						Collected SB-4 at 3'.		
4					0.1			
4.0								
5						5.0'		
6	S-2	55%	NA	SP	0.1	**SAND**, medium grained; light brown; wet.		
7								
8						8.0'		
8.0								
9						End of Boring at 8'.		
10								

DRILLING CO.: Envirodynamics BAKER REP.: Rick Spitaler
DRILLER: Rob Morris BORING NO.: SB-4 SHEET 1 OF 1

Baker
Baker Environmental

TEST BORING AND WELL CONSTRUCTION RECORD

PROJECT:	City of Gary J-Pit Phase II Investigation		
PROJECT NO.:	24989-0-0-00100	BORING NAME:	SB-5
COORDINATES: EAST:	2863797.15	NORTH:	2305980.99
ELEVATION: SURFACE:	606.60	DIAMETER: (inches)	

Rig: Geoprobe 5400	Split Spoon	Casing	Augers	Core Barrel	Date	Progress (Ft.)	Weather	Depth to Water (Ft.)
Size (ID)		NA	NA	NA	11/21/02	4.0	Overcast, 40's	3.5
Length	4.0"							
Type	NA							
Hammer Wt.	NA							
Fall	NA							

Remarks:

SAMPLE TYPE
S = Split Spoon A = Auger
T = Shelby Tube W = Wash
R = Air Rotary C = Core
D = Denison P = Piston
N = No Sample

DEFINITIONS
SPT = Standard Penetration Test (ASTM D1586)
PID = Photo Ionization Detector Measurement
MSL = Mean Sea Level
BG/PS = Background/Point Source
ppm = parts per million

Depth (Ft.)	Sample Type & No.	Sample Rec. (Ft.,%)	SPT	USCS CODES	PID (ppm) ps/bg	Visual Description	Bore Detail	Elevation (Ft. MSL)
1						**SAND**, medium grained, trace silt; light brown; moist.		605.60
2	S-1	75%	NA	SP	0.1	Collected SB-5 at 2.5 to 3.5'.		604.60
3						Wet.		603.60
4	4.0					4.0'		602.60
5						End of Boring at 4'.		601.60
6								600.60
7								599.60
8								598.60
9								597.60
10								596.60

DRILLING CO.:	Envirodynamics	BAKER REP.:	Rick Spitaler
DRILLER:	Rob Morris	BORING NO.:	SB-5 SHEET 1 OF 1

Baker
Baker Environmental

TEST BORING AND WELL CONSTRUCTION RECORD

PROJECT:	City of Gary J-Pit Phase II Investigation		
PROJECT NO.:	24989-0-0-00100	BORING NAME:	SB-6
COORDINATES:	EAST: 2863029.21	NORTH:	2306178.70
ELEVATION:	SURFACE: 607.50	DIAMETER: (inches)	

Rig: Geoprobe 5400	Split Spoon	Casing	Augers	Core Barrel	Date	Progress (Ft.)	Weather	Depth to Water (Ft.)
Size (ID)		NA	NA	NA	11/02/02	8.0	Overcast, 40's	7.0
Length	4.0"							
Type	NA							
Hammer Wt.	NA							
Fall	NA							

Remarks:

SAMPLE TYPE
S = Split Spoon A = Auger
T = Shelby Tube W = Wash
R = Air Rotary C = Core
D = Denison P = Piston
N = No Sample

DEFINITIONS
SPT = Standard Penetration Test (ASTM D1586)
PID = Photo Ionization Detector Measurement
MSL = Mean Sea Level
BG/PS = Background/Point Source
ppm = parts per million

Depth (Ft.)		Sample Type & No.	Sample Rec. (Ft.,%)	SPT	USCS CODES	PID (ppm) ps/bg	Visual Description	Bore Detail	Elevation (Ft. MSL)
1					FI	0.0	**FILL**, (sand, silt, glass, tire fragments, black fines)		606.50
2		S-1	80%	NA			2.5'		605.50
3					SP	0.1			604.50
4	4.0						Collect Sample SB-6 at 3.5 to 4'.		603.50
5							**SAND**, fine to medium grained, trace silt, some dark staining; light brown; dry.		602.50
6		S-2	80%	NA	SP	0.0			601.50
7							Wet.		600.50
8	8.0						8.0'		599.50
9							End of Boring at 8'.		598.50
10									597.50

DRILLING CO.:	Envirodynamics	BAKER REP.:	Rick Spitaler
DRILLER:	Rob Morris	BORING NO.:	SB-6 SHEET 1 OF 1

Baker
Baker Environmental

TEST BORING AND WELL CONSTRUCTION RECORD

PROJECT:	City of Gary J-Pit Phase II Investigation		
PROJECT NO.:	24989-0-0-00100	BORING NAME:	SB-7
COORDINATES:	EAST: 87 24 532	NORTH:	41 34 629
ELEVATION:	SURFACE:	DIAMETER: (inches)	

Rig: Geoprobe 5400	Split Spoon	Casing	Augers	Core Barrel	Date	Progress (Ft.)	Weather	Depth to Water (Ft.)
Size (ID)		NA	NA	NA	11/04/02	8.0	Overcast, 40's	6.5
Length	4.0"							
Type	NA							
Hammer Wt.	NA							
Fall	NA							

Remarks:

SAMPLE TYPE
S = Split Spoon A = Auger
T = Shelby Tube W = Wash
R = Air Rotary C = Core
D = Denison P = Piston
N = No Sample

DEFINITIONS
SPT = Standard Penetration Test (ASTM D1586)
PID = Photo Ionization Detector Measurement
MSL = Mean Sea Level
BG/PS = Background/Point Source
ppm = parts per million

Depth (Ft.)	Sample Type & No.	Sample Rec. (Ft.,%)	SPT	USCS CODES	PID (ppm) ps/bg	Visual Description	Bore Detail	Elevation (Ft. MSL)
				ML	0.0	**TOPSOIL**, sand, leaves. 4.0"		
1								
2	S-1	70%	NA	SP	0.0	Collected SB-7-1 at 0-1.5'.		
3						**SAND**, medium grained, trace silt; loose; yellow; wet.		
4 4.0								
5						Collected SB-7-2 at 5.0 to 6.5'		
6	S-2	75%	NA	SP	0.1			
7						Wet.		
8 8.0						8.0'		
9						End of Boring at 8'.		
10								

DRILLING CO.:	Envirodynamics	BAKER REP.:	Rick Spitaler
DRILLER:	Rob Morris	BORING NO.:	SB-7 SHEET 1 OF 1

Baker

Baker Environmental

TEST BORING AND WELL CONSTRUCTION RECORD

PROJECT: City of Gary J-Pit Phase II Investigation

PROJECT NO.: 24989-0-0-00100 BORING NAME: SB-8

COORDINATES: EAST: 87 24 622 NORTH: 41 34 639

ELEVATION: SURFACE: DIAMETER: (inches)

Rig: Geoprobe 5400	Split Spoon	Casing	Augers	Core Barrel	Date	Progress (Ft.)	Weather	Depth to Water (Ft.)
Size (ID)		NA	NA	NA	11/04/02	8.0	Overcast, 40's	7.5
Length	4.0"							
Type	NA							
Hammer Wt.	NA							
Fall	NA							

Remarks:

SAMPLE TYPE

S = Split Spoon A = Auger
T = Shelby Tube W = Wash
R = Air Rotary C = Core
D = Denison P = Piston
N = No Sample

DEFINITIONS

SPT = Standard Penetration Test (ASTM D1586)
PID = Photo Ionization Detector Measurement
MSL = Mean Sea Level
BG/PS = Background/Point Source
ppm = parts per million

Depth (Ft.)		Sample Type & No.	Sample Rec. (Ft.,%)	SPT	USCS CODES	PID (ppm) ps/bg	Visual Description	Bore Detail	Elevation (Ft. MSL)
					ML	0.3	**TOPSOIL**, sand, leaves. 2.0"		
1									
2		S-1	65%	NA	SP	0.3	**SAND**, medium grained, trace silt, loose, light brown, dry.		
3									
4	4.0								
5									
6		S-2	70%	NA	SP	0.8			
7							Collected SB-8 at 6.5 to 7.5'. Wet.		
8	8.0						8.0'		
9							End of Boring at 8'.		
10									

DRILLING CO.: Envirodynamics BAKER REP.: Rick Spitaler

DRILLER: Rob Morris BORING NO.: SB-8 SHEET 1 OF 1

Baker

Baker Environmental

TEST BORING AND WELL CONSTRUCTION RECORD

PROJECT:	City of Gary J-Pit Phase II Investigation		
PROJECT NO.:	24989-0-0-00100	BORING NAME:	SB-9
COORDINATES:	EAST: 2862744.80	NORTH:	2309283.20
ELEVATION:	SURFACE: 602.70	DIAMETER: (inches)	

Rig: Geoprobe 5400	Split Spoon	Casing	Augers	Core Barrel	Date	Progress (Ft.)	Weather	Depth to Water (Ft.)
Size (ID)		NA	NA	NA	11/04/02	20.0	Overcast, 40's	16.0
Length	4.0"							
Type	NA							
Hammer Wt.	NA							
Fall	NA							

Remarks:

SAMPLE TYPE

S = Split Spoon A = Auger
T = Shelby Tube W = Wash
R = Air Rotary C = Core
D = Denison P = Piston
N = No Sample

DEFINITIONS

SPT = Standard Penetration Test (ASTM D1586)
PID = Photo Ionization Detector Measurement
MSL = Mean Sea Level
BG/PS = Background/Point Source
ppm = parts per million

Depth (Ft.)	Sample Type & No.	Sample Rec. (Ft.,%)	SPT	USCS CODES	PID (ppm) ps/bg	Visual Description	Bore Detail	Elevation (Ft. MSL)
				SM	0.1	**TOPSOIL**, sand, little organics; grey. 0.5'		
1						**SAND**, medium grained, trace silt; loose; light brown; dry..		601.70
2	S-1	60%	NA	SP	0.2	Collected SB-9 at 1 to 2'.		600.70
3								599.70
4	4.0							598.70
5					2.1			597.70
6	S-2	60%	NA	SP				596.70
7								595.70
8	8.0				0.4			594.70
9	S-3	75%	NA	SP	0.6			593.70
10								592.70

DRILLING CO.:	Envirodynamics	BAKER REP.:	Rick Spitaler
DRILLER:	Rob Morris	BORING NO.:	SB-9 SHEET 1 OF 2

Baker
Baker Environmental

TEST BORING AND WELL CONSTRUCTION RECORD

PROJECT: City of Gary J-Pit Phase II Investigation
PROJECT NO.: 25290-000-0000 BORING NO.: SB-9

SAMPLE TYPE
S = Split Spoon A = Auger
T = Shelby Tube W = Wash
R = Air Rotary C = Core
D = Denison P = Piston N = No Sample

DEFINITIONS
SPT = Standard Penetration Test (ASTM D1586)
PID = Photo Ionization Detector Measurement
MSL = Mean Sea Level
ps/bg = point source/background

Depth (Ft.)		Sample Type & No.	Sample Rec. (Ft.,%)	SPT	USCS CODES	PID (ppm) ps/bg	Visual Description	Bore Detail	Elevation (Ft. MSL)
11							**SAND**, medium grained, trace silt; dense; light brown; dry.		591.70
12	12.0								590.70
13									589.70
14		S-4	65%	NA	SP	0.0	Collect Sample SB-9 at 14 to 15'.		588.70
15									587.70
16	16.0						Wet.		586.70
17									585.70
18		S-5	70%	NA	SP	0.0			584.70
19									583.70
20	20.0						**20.0'**		582.70
21							End of Boring at 20'.		581.70
22									580.70
23									579.70
24									578.70
25									577.70
26									576.70
27									575.70
28									574.70
29									573.70
30									572.70

DRILLING CO.: Envirodynamics BAKER REP.: Rick Spitaler
DRILLER: Rob Morris BORING NO.: SB-9 SHEET 2 OF 2

Baker
Baker Environmental

TEST BORING AND WELL CONSTRUCTION RECORD

PROJECT:	City of Gary J-Pit Phase II Investigation		
PROJECT NO.:	24989-0-0-00100	BORING NAME:	SB-10
COORDINATES: EAST:	2862471.31	NORTH:	2308756.20
ELEVATION: SURFACE:	609.10	DIAMETER: (inches)	

Rig: Geoprobe 5400	Split Spoon	Casing	Augers	Core Barrel	Date	Progress (Ft.)	Weather	Depth to Water (Ft.)
Size (ID)		NA	NA	NA	11/05/02	28.0	Rain, 40's	24.0
Length	4.0"							
Type	NA							
Hammer Wt.	NA							
Fall	NA							

Remarks:

SAMPLE TYPE
S = Split Spoon A = Auger
T = Shelby Tube W = Wash
R = Air Rotary C = Core
D = Denison P = Piston
N = No Sample

DEFINITIONS
SPT = Standard Penetration Test (ASTM D1586)
PID = Photo Ionization Detector Measurement
MSL = Mean Sea Level
BG/PS = Background/Point Source
ppm = parts per million

Depth (Ft.)	Sample Type & No.	Sample Rec. (Ft.,%)	SPT	USCS CODES	PID (ppm) ps/bg	Visual Description	Bore Detail	Elevation (Ft. MSL)
						TOPSOIL, sand, leaves, roots. 0.5'		
1								608.10
2	S-1	65%	NA	SP	0.1	**SAND**, medium grained, trace silt, loose, light brown, dry.		607.10
3								606.10
4	4.0							605.10
5								604.10
6	S-2	70%	NA	SP	0.2			603.10
7								602.10
8	8.0							601.10
9	S-3	70%	NA	SP	0.1			600.10
10								599.10

DRILLING CO.:	Envirodynamics	BAKER REP.:	Rick Spitaler
DRILLER:	Gregg Kolibowski	BORING NO.:	SB-10 SHEET 1 OF 2

Baker
Baker Environmental

TEST BORING AND WELL CONSTRUCTION RECORD

PROJECT: City of Gary J-Pit Phase II Investigation
PROJECT NO.: 25290-000-0000 BORING NO.: SB-10

SAMPLE TYPE
S = Split Spoon A = Auger
T = Shelby Tube W = Wash
R = Air Rotary C = Core
D = Denison P = Piston N = No Sample

DEFINITIONS
SPT = Standard Penetration Test (ASTM D1586)
PID = Photo Ionization Detector Measurement
MSL = Mean Sea Level
ps/bg = point source/background

Depth (Ft.)	Sample Type & No.	Sample Rec. (Ft.,%)	SPT	USCS CODES	PID (ppm) ps/bg	Visual Description	Bore Detail	Elevation (Ft. MSL)
11						**SAND**, medium grained, trace silt, loose, light brown, dry.		598.10
12 12.0								597.10
13								596.10
14	S-4	70%	NA	SP	0.1			595.10
15								594.10
16 16.0								593.10
17								592.10
18	S-5	75%	NA	SP	0.1			591.10
19								590.10
20 20.0								589.10
21								588.10
22	S-6	75%	NA	SP	0.2			587.10
23						Sample SB-10 at 23'.		586.10
24 24.0						Wet.		585.10
25								584.10
						25.5'		
26	S-7	80%	NA	SP	0.1	**SAND**, course grained. 1.0"		583.10
27								582.10
28 28.0						28.0'		581.10
29						End of Boring at 28'.		580.10
30								579.10

DRILLING CO.: Envirodynamics BAKER REP.: Rick Spitaler
DRILLER: Gregg Kolibowski BORING NO.: SB-10 SHEET 2 OF 2

Baker
Baker Environmental

TEST BORING AND WELL CONSTRUCTION RECORD

PROJECT: City of Gary J-Pit Phase II Investigation
PROJECT NO.: 24989-0-0-00100 BORING NAME: SB-11
COORDINATES: EAST: 87 24 801 NORTH: 41 35 218
ELEVATION: SURFACE: DIAMETER: (inches)

Rig: Geoprobe 5400	Split Spoon	Casing	Augers	Core Barrel	Date	Progress (Ft.)	Weather	Depth to Water (Ft.)
Size (ID)		NA	NA	NA	11/05/02	24.0	Rain, 40's	20.0
Length	4.0"							
Type	NA							
Hammer Wt.	NA							
Fall	NA							

Remarks:

SAMPLE TYPE
S = Split Spoon A = Auger
T = Shelby Tube W = Wash
R = Air Rotary C = Core
D = Denison P = Piston
N = No Sample

DEFINITIONS
SPT = Standard Penetration Test (ASTM D1586)
PID = Photo Ionization Detector Measurement
MSL = Mean Sea Level
BG/PS = Background/Point Source
ppm = parts per million

Depth (Ft.)	Sample Type & No.	Sample Rec. (Ft.,%)	SPT	USCS CODES	PID (ppm) ps/bg	Visual Description	Bore Detail	Elevation (Ft. MSL)
						TOPSOIL. 0.5'		
1, 2, 3, 4 (4.0)	S-1	75%	NA	SP	0.1	**SAND,** medium grained, trace silt; loose; light brown; dry.		
5, 6, 7, 8 (8.0)	S-2	78%	NA	SP	0.2			
9, 10	S-3	70%	NA	SP	0.2			

DRILLING CO.: Envirodynamics BAKER REP.: Rick Spitaler
DRILLER: Rob Morris BORING NO.: SB-11 SHEET 1 OF 2

Baker
Baker Environmental

TEST BORING AND WELL CONSTRUCTION RECORD

PROJECT: City of Gary J-Pit Phase II Investigation
PROJECT NO.: 25290-000-0000 BORING NO.: SB-11

SAMPLE TYPE
S = Split Spoon A = Auger
T = Shelby Tube W = Wash
R = Air Rotary C = Core
D = Denison P = Piston N = No Sample

DEFINITIONS
SPT = Standard Penetration Test (ASTM D1586)
PID = Photo Ionization Detector Measurement
MSL = Mean Sea Level
ps/bg = point source/background

Depth (Ft.)		Sample Type & No.	Sample Rec. (Ft.,%)	SPT	USCS CODES	PID (ppm) ps/bg	Visual Description	Bore Detail	Elevation (Ft. MSL)
11							**SAND**, medium grained, trace silt; loose; light brown; dry.		
12	12.0								
13									
14		S-4	65%	NA	SP	0.2			
15									
16	16.0								
17									
18		S-5	70%	NA	SP	0.2			
19							Collected SB-10-01 at 19'.		
20	20.0						Wet.		
21									
22		S-6	85%	NA	SP	0.2			
23									
24	24.0						**24.0'**		
25							End of Boring at 24'.		
26									
27									
28									
29									
30									

DRILLING CO.: Envirodynamics BAKER REP.: Rick Spitaler
DRILLER: Rob Morris BORING NO.: SB-11 SHEET 2 OF 2

Baker
Baker Environmental

TEST BORING AND WELL CONSTRUCTION RECORD

PROJECT: City of Gary J-Pit Phase II Investigation
PROJECT NO.: 24989-0-0-00100 BORING NAME: SB-12
COORDINATES: EAST: 87 25 259 NORTH: 41 34 820
ELEVATION: SURFACE: DIAMETER: (inches)

Rig: Geoprobe 5400	Split Spoon	Casing	Augers	Core Barrel	Date	Progress (Ft.)	Weather	Depth to Water (Ft.)
Size (ID)		NA	NA	NA	11/05/02	4.0	Rain, 40's	2.0
Length	4.0"							
Type	NA							
Hammer Wt.	NA							
Fall	NA							

Remarks:

SAMPLE TYPE
S = Split Spoon A = Auger
T = Shelby Tube W = Wash
R = Air Rotary C = Core
D = Denison P = Piston
N = No Sample

DEFINITIONS
SPT = Standard Penetration Test (ASTM D1586)
PID = Photo Ionization Detector Measurement
MSL = Mean Sea Level
BG/PS = Background/Point Source
ppm = parts per million

Depth (Ft.)	Sample Type & No.	Sample Rec. (Ft.,%)	SPT	USCS CODES	PID (ppm) ps/bg	Visual Description	Bore Detail	Elevation (Ft. MSL)
1						**SAND**, medium grained, roots, little fines; loose; dark brown; moist.		
2	S-1	70%	NA	SP	0.2	Wet.		
3								
4	4.0					Collect SB-12-01/MS/MSD at 4'. 4.0'		
5						End of Boring at 4'.		
6								
7								
8								
9								
10								

DRILLING CO.: Envirodynamics BAKER REP.: Rick Spitaler
DRILLER: Greg Kolibowski BORING NO.: SB-12 SHEET 1 OF 1

Baker
Baker Environmental

TEST BORING AND WELL CONSTRUCTION RECORD

PROJECT: City of Gary J-Pit Phase II Investigation
PROJECT NO.: 24989-0-0-00100 BORING NAME: SB-13
COORDINATES: EAST: NA NORTH: NA
ELEVATION: SURFACE: DIAMETER: (inches)

Rig: Geoprobe 5400	Split Spoon	Casing	Augers	Core Barrel	Date	Progress (Ft.)	Weather	Depth to Water (Ft.)
Size (ID)		NA	NA	NA	11/08/02	24.0	Clear, 50's	20.0
Length	4.0"							
Type	NA							
Hammer Wt.	NA							
Fall	NA							

Remarks:

SAMPLE TYPE
S = Split Spoon A = Auger
T = Shelby Tube W = Wash
R = Air Rotary C = Core
D = Denison P = Piston
N = No Sample

DEFINITIONS
SPT = Standard Penetration Test (ASTM D1586)
PID = Photo Ionization Detector Measurement
MSL = Mean Sea Level
BG/PS = Background/Point Source
ppm = parts per million

Depth (Ft.)		Sample Type & No.	Sample Rec. (Ft.,%)	SPT	USCS CODES	PID (ppm) ps/bg	Visual Description	Bore Detail	Elevation (Ft. MSL)
1							**SAND**, medium grained, trace silt, trace organics, roots; loose; dark brown; moist. 1.0'		
2		S-1	90%	NA	SP	0.0	**SAND**, mediium grained; loose; light brown; dry.		
3									
4	4.0								
5									
6		S-2	90%	NA	SP	0.0			
7									
8	8.0								
9		S-3	70%	NA	SP	0.0			
10									

DRILLING CO.: Envirodynamics BAKER REP.: Rick Spitaler
DRILLER: Rob Morris BORING NO.: SB-13 SHEET 1 OF 2

Baker
Baker Environmental

TEST BORING AND WELL CONSTRUCTION RECORD

PROJECT: City of Gary J-Pit Phase II Investigation
PROJECT NO.: 25290-000-0000 BORING NO.: SB-13

SAMPLE TYPE
S = Split Spoon A = Auger
T = Shelby Tube W = Wash
R = Air Rotary C = Core
D = Denison P = Piston N = No Sample

DEFINITIONS
SPT = Standard Penetration Test (ASTM D1586)
PID = Photo Ionization Detector Measurement
MSL = Mean Sea Level
ps/bg = point source/background

Depth (Ft.)	Sample Type & No.	Sample Rec. (Ft.,%)	SPT	USCS CODES	PID (ppm) ps/bg	Visual Description	Bore Detail	Elevation (Ft. MSL)
11						**SAND**, mediium grained; loose; light brown; dry.		
12 12.0								
13								
14	S-4	75%	NA	SP	0.0			
15								
16 16.0								
17								
18	S-5	85%	NA	SP	0.0			
19						Collected SB-13 at 19'.		
20 20.0						Wet.		
21								
22	S-6	95%	NA	SP	0.0			
23						Medium to course grained sand; trace gravel (rounded).		
24 24.0						**24.0'**		
25						End of Boring at 24'.		
26								
27								
28								
29								
30								

DRILLING CO.: Envirodynamics BAKER REP.: Rick Spitaler
DRILLER: Rob Morris BORING NO.: SB-13 SHEET 2 OF 2

Baker

Baker Environmental

TEST BORING AND WELL CONSTRUCTION RECORD

PROJECT: City of Gary J-Pit Phase II Investigation

PROJECT NO.: 24989-0-0-00100 BORING NAME: SB-14

COORDINATES: EAST: NA NORTH: NA

ELEVATION: SURFACE: DIAMETER: (inches)

Rig: Geoprobe 5400	Split Spoon	Casing	Augers	Core Barrel	Date	Progress (Ft.)	Weather	Depth to Water (Ft.)
Size (ID)		NA	NA	NA	11/08/02	20.0	Clear, 50's	16.0
Length	4.0"							
Type	NA							
Hammer Wt.	NA							
Fall	NA							

Remarks:

SAMPLE TYPE

S = Split Spoon A = Auger
T = Shelby Tube W = Wash
R = Air Rotary C = Core
D = Denison P = Piston
N = No Sample

DEFINITIONS

SPT = Standard Penetration Test (ASTM D1586)
PID = Photo Ionization Detector Measurement
MSL = Mean Sea Level
BG/PS = Background/Point Source
ppm = parts per million

Depth (Ft.)	Sample Type & No.	Sample Rec. (Ft.,%)	SPT	USCS CODES	PID (ppm) ps/bg	Visual Description	Bore Detail	Elevation (Ft. MSL)
1				FI		**FILL**, (silt, sand, slag, rock, trace organics); black.		
2	S-1	85%	NA		0.0	2.0'		
3				SP		**SAND**, medium grained, disturbed fill (trace gravel, rubber); grey.		
4	4.0					4.0'		
5						**SAND**, medium grained, disturbed; yellow brown.		
6	S-2	90%	NA	SP	0.0			
7								
8	8.0							
9	S-3	75%	NA	SP	0.1	9.0'		
10						**SAND**, medium grained, trace silt; light brown; dry.		

DRILLING CO.: Envirodynamics BAKER REP.: Rick Spitaler

DRILLER: Rob Morris BORING NO.: SB-14 SHEET 1 OF 2

Baker
Baker Environmental

TEST BORING AND WELL CONSTRUCTION RECORD

PROJECT: City of Gary J-Pit Phase II Investigation
PROJECT NO.: 25290-000-0000 BORING NO.: SB-14

SAMPLE TYPE
S = Split Spoon A = Auger
T = Shelby Tube W = Wash
R = Air Rotary C = Core
D = Denison P = Piston N = No Sample

DEFINITIONS
SPT = Standard Penetration Test (ASTM D1586)
PID = Photo Ionization Detector Measurement
MSL = Mean Sea Level
ps/bg = point source/background

Depth (Ft.)	Sample Type & No.	Sample Rec. (Ft.,%)	SPT	USCS CODES	PID (ppm) ps/bg	Visual Description	Bore Detail	Elevation (Ft. MSL)
11						**SAND**, medium grained, trace silt; light brown; dry.		
12 12.0								
13								
14	S-4	85%	NA	SP	0.1			
15						Sample SB-14-01 at 15'.		
16 16.0						Wet.		
17								
18	S-5	90%	NA	SP	0.0			
19								
20 20.0						20.0'		
21						End of Boring at 20'.		
22								
23								
24								
25								
26								
27								
28								
29								
30								

DRILLING CO.: Envirodynamics BAKER REP.: Rick Spitaler
DRILLER: Rob Morris BORING NO.: SB-14 SHEET 2 OF 2

Baker

Baker Environmental

TEST BORING AND WELL CONSTRUCTION RECORD

PROJECT:	City of Gary J-Pit Phase II Investigation		
PROJECT NO.:	24989-0-0-00100	BORING NAME:	SB-15
COORDINATES:	EAST: 87 25 361	NORTH:	41 34 824
ELEVATION:	SURFACE:	DIAMETER: (inches)	

Rig: Geoprobe 5400	Split Spoon	Casing	Augers	Core Barrel	Date	Progress (Ft.)	Weather	Depth to Water (Ft.)
Size (ID)		NA	NA	NA	11/08/02	28.0	Clear, 50's	11.5
Length	4.0"							
Type	NA							
Hammer Wt.	NA							
Fall	NA							

Remarks:

SAMPLE TYPE

S = Split Spoon A = Auger
T = Shelby Tube W = Wash
R = Air Rotary C = Core
D = Denison P = Piston
N = No Sample

DEFINITIONS

SPT = Standard Penetration Test (ASTM D1586)
PID = Photo Ionization Detector Measurement
MSL = Mean Sea Level
BG/PS = Background/Point Source
ppm = parts per million

Depth (Ft.)	Sample Type & No.	Sample Rec. (Ft.,%)	SPT	USCS CODES	PID (ppm) ps/bg	Visual Description	Bore Detail	Elevation (Ft. MSL)
1						**TOPSOIL**, sand, little silt; grey.		
2	S-1	80%	NA	SP	0.0	2.0'		
3						**SAND**, medium grained, trace silt, loose, yellow brown, dry.		
4	4.0							
5								
6	S-2	75%	NA	SP	0.0			
7								
8	8.0							
9	S-3	80%	NA	SP	0.0			
10						Collect Sample SB-15 at 10'.		

DRILLING CO.:	Envirodynamics	BAKER REP.:	Rick Spitaler
DRILLER:	Rob Morris	BORING NO.:	SB-15 SHEET 1 OF 2

Baker
Baker Environmental

TEST BORING AND WELL CONSTRUCTION RECORD

PROJECT: City of Gary J-Pit Phase II Investigation
PROJECT NO.: 25290-000-0000 BORING NO.: SB-15

SAMPLE TYPE
S = Split Spoon A = Auger
T = Shelby Tube W = Wash
R = Air Rotary C = Core
D = Denison P = Piston N = No Sample

DEFINITIONS
SPT = Standard Penetration Test (ASTM D1586)
PID = Photo Ionization Detector Measurement
MSL = Mean Sea Level
ps/bg = point source/background

Depth (Ft.)	Sample Type & No.	Sample Rec. (Ft.,%)	SPT	USCS CODES	PID (ppm) ps/bg	Visual Description	Bore Detail	Elevation (Ft. MSL)
11						**SAND**, medium grained, trace silt, loose, yellow brown, moist to wet.		
12 12.0								
13								
14	S-4	85%	NA	SP	0.0			
15						**GRAVEL**, trace, well rounded; grey.		
16 16.0								
17								
18	S-5	80%	NA	SP	0.0			
19								
20 20.0								
21								
22	S-6	80%	NA	SP	0.0			
23								
24 24.0								
25								
26	S-7		NA	SN	0.0	**26.5'**		
27						**CLAY**, mottled, trace gravel, sand; dense; grey to brown; moist.		
28 28.0						**28.0'**		
29						End of Boring at 28'.		
30								

DRILLING CO.: Envirodynamics BAKER REP.: Rick Spitaler
DRILLER: Rob Morris BORING NO.: SB-15 SHEET 2 OF 2

Baker
Baker Environmental

TEST BORING AND WELL CONSTRUCTION RECORD

PROJECT:	City of Gary J-Pit Phase II Investigation		
PROJECT NO.:	24989-0-0-00100	BORING NAME:	SB-16
COORDINATES:	EAST: 87 25 357	NORTH:	41 34 761
ELEVATION:	SURFACE:	DIAMETER: (inches)	

Rig: Geoprobe 5400	Split Spoon	Casing	Augers	Core Barrel	Date	Progress (Ft.)	Weather	Depth to Water (Ft.)
Size (ID)		NA	NA	NA	11/08/02	8.0	Partly Cloudy; 50's	7.2
Length	4.0"							
Type	NA							
Hammer Wt.	NA							
Fall	NA							

Remarks:

SAMPLE TYPE
S = Split Spoon A = Auger
T = Shelby Tube W = Wash
R = Air Rotary C = Core
D = Denison P = Piston
N = No Sample

DEFINITIONS
SPT = Standard Penetration Test (ASTM D1586)
PID = Photo Ionization Detector Measurement
MSL = Mean Sea Level
BG/PS = Background/Point Source
ppm = parts per million

Depth (Ft.)	Sample Type & No.	Sample Rec. (Ft.,%)	SPT	USCS CODES	PID (ppm) ps/bg	Visual Description	Bore Detail	Elevation (Ft. MSL)
1								
2	S-1	80%	NA	SP	0.0	**SAND**, medium grained, trace silt; light brown; dry.		
3								
4	4.0							
5						Moist.		
6	S-2	80%	NA	SP	0.0	Collect SB-16-01 at 6'.		
7						7.2'		
8	8.0					Wet. 8.0'		
9						End of Boring at 8'.		
10								

DRILLING CO.:	Envirodynamics	BAKER REP.:	Rick Spitaler
DRILLER:	Greg Kolibowski	BORING NO.:	SB-16 SHEET 1 OF 1

Baker

Baker Environmental

TEST BORING AND WELL CONSTRUCTION RECORD

PROJECT: City of Gary J-Pit Phase II Investigation

PROJECT NO.: 24989-0-0-00100 BORING NAME: SB-17

COORDINATES: EAST: NORTH:

ELEVATION: SURFACE: DIAMETER: (inches)

Rig: Geoprobe 5400	Split Spoon	Casing	Augers	Core Barrel	Date	Progress (Ft.)	Weather	Depth to Water (Ft.)
Size (ID)		NA	NA	NA	11/08/02	20.0	Partly Cloudy; 50's	16.0
Length	4.0"							
Type	NA							
Hammer Wt.	NA							
Fall	NA							

Remarks:

SAMPLE TYPE

S = Split Spoon A = Auger
T = Shelby Tube W = Wash
R = Air Rotary C = Core
D = Denison P = Piston
N = No Sample

DEFINITIONS

SPT = Standard Penetration Test (ASTM D1586)
PID = Photo Ionization Detector Measurement
MSL = Mean Sea Level
BG/PS = Background/Point Source
ppm = parts per million

Depth (Ft.)		Sample Type & No.	Sample Rec. (Ft.,%)	SPT	USCS CODES	PID (ppm) ps/bg	Visual Description	Bore Detail	Elevation (Ft. MSL)
1							**SAND**, medium grained, little silt, trace gravel, disturbed.		
2		S-1	60%	NA	SP	1.0	2.0'		
3							**SAND**, medium grained, trace silt; light brown.		
4	4.0								
5							Medium to course grained sand.		
6		S-2	75%	NA	SP	0.0	Banding (thin organic silt layer).		
7									
8	8.0								
9		S-3	55%	NA	SP	0.0	Grades to **SAND**, medium grained; dense; light brown; dry.		
10									

DRILLING CO.: Envirodynamics BAKER REP.: Rick Spitaler

DRILLER: Rob Morris BORING NO.: SB-17 SHEET 1 OF 2

Baker
Baker Environmental

TEST BORING AND WELL CONSTRUCTION RECORD

PROJECT: City of Gary J-Pit Phase II Investigation
PROJECT NO.: 25290-000-0000 BORING NO.: SB-17

SAMPLE TYPE
S = Split Spoon A = Auger
T = Shelby Tube W = Wash
R = Air Rotary C = Core
D = Denison P = Piston N = No Sample

DEFINITIONS
SPT = Standard Penetration Test (ASTM D1586)
PID = Photo Ionization Detector Measurement
MSL = Mean Sea Level
ps/bg = point source/background

Depth (Ft.)		Sample Type & No.	Sample Rec. (Ft.,%)	SPT	USCS CODES	PID (ppm) ps/bg	Visual Description	Bore Detail	Elevation (Ft. MSL)
11							SAND, medium grained; dense; light brown; dry.		
12	12.0								
13									
14		S-4	80%	NA	SP	0.0	Collect SB-17-01 at 14'.		
15									
16	16.0						Wet.		
17									
18		S-5	80%	NA	SP	0.0			
19									
20	20.0						20.0'		
21							End of Boring at 20'.		
22									
23									
24									
25									
26									
27									
28									
29									
30									

DRILLING CO.: Envirodynamics BAKER REP.: Rick Spitaler
DRILLER: Rob Morris BORING NO.: SB-17 SHEET 2 OF 2

Baker
Baker Environmental

TEST BORING AND WELL CONSTRUCTION RECORD

PROJECT: City of Gary J-Pit Phase II Investigation
PROJECT NO.: 24989-0-0-00100 BORING NAME: SB-18
COORDINATES: EAST: NORTH:
ELEVATION: SURFACE: DIAMETER: (inches)

Rig: Geoprobe 5400	Split Spoon	Casing	Augers	Core Barrel	Date	Progress (Ft.)	Weather	Depth to Water (Ft.)
Size (ID)		NA	NA	NA	11/08/02	20.0	Partly Cloudy; 50's	19.0
Length	4.0"							
Type	NA							
Hammer Wt.	NA							
Fall	NA							

Remarks:

SAMPLE TYPE
S = Split Spoon A = Auger
T = Shelby Tube W = Wash
R = Air Rotary C = Core
D = Denison P = Piston
N = No Sample

DEFINITIONS
SPT = Standard Penetration Test (ASTM D1586)
PID = Photo Ionization Detector Measurement
MSL = Mean Sea Level
BG/PS = Background/Point Source
ppm = parts per million

Depth (Ft.)		Sample Type & No.	Sample Rec. (Ft.,%)	SPT	USCS CODES	PID (ppm) ps/bg	Visual Description	Bore Detail	Elevation (Ft. MSL)
1							**TOPSOIL**, wood. 1.0'		
2		S-1	55%	NA	SP	0.0	**SAND**, fine grained, trace silt; yellow brown.		
3							Collect SB-18-01 at 3 to 5'.		
4	4.0								
5									
6		S-2	75%	NA	SP	0.0			
7									
8	8.0								
9		S-3	80%	NA	SP	0.0			
10									

DRILLING CO.: Envirodynamics BAKER REP.: Rick Spitaler
DRILLER: Rob Morris BORING NO.: SB-18 SHEET 1 OF 2

Baker
Baker Environmental

TEST BORING AND WELL CONSTRUCTION RECORD

PROJECT: City of Gary J-Pit Phase II Investigation
PROJECT NO.: 25290-000-0000 BORING NO.: SB-18

SAMPLE TYPE
S = Split Spoon A = Auger
T = Shelby Tube W = Wash
R = Air Rotary C = Core
D = Denison P = Piston N = No Sample

DEFINITIONS
SPT = Standard Penetration Test (ASTM D1586)
PID = Photo Ionization Detector Measurement
MSL = Mean Sea Level
ps/bg = point source/background

Depth (Ft.)		Sample Type & No.	Sample Rec. (Ft.,%)	SPT	USCS CODES	PID (ppm) ps/bg	Visual Description	Bore Detail	Elevation (Ft. MSL)
11							SAND, fine to medium grained, trace silt; dense; light brown.		
12	12.0								
13									
14		S-4	75%	NA	SP	0.0			
15									
16	16.0								
17									
18		S-5	70%	NA	SP	0.0			
19							Wet.		
20	20.0						20.0'		
21							End of Boring at 20'.		
22									
23									
24									
25									
26									
27									
28									
29									
30									

DRILLING CO.: Envirodynamics BAKER REP.: Rick Spitaler
DRILLER: Rob Morris BORING NO.: SB-18 SHEET 2 OF 2

Baker

Baker Environmental

TEST BORING AND WELL CONSTRUCTION RECORD

PROJECT: City of Gary J-Pit Phase II Investigation

PROJECT NO.: 24989-0-0-00100 BORING NAME: SB-19

COORDINATES: EAST: NORTH:

ELEVATION: SURFACE: DIAMETER: (inches)

Rig: Geoprobe 5400	Split Spoon	Casing	Augers	Core Barrel	Date	Progress (Ft.)	Weather	Depth to Water (Ft.)
Size (ID)		NA	NA	NA	11/08/02	20.0	Partly Cloudy; 50's	19.8
Length	4.0"							
Type	NA							
Hammer Wt.	NA							
Fall	NA							

Remarks:

SAMPLE TYPE

S = Split Spoon A = Auger
T = Shelby Tube W = Wash
R = Air Rotary C = Core
D = Denison P = Piston
N = No Sample

DEFINITIONS

SPT = Standard Penetration Test (ASTM D1586)
PID = Photo Ionization Detector Measurement
MSL = Mean Sea Level
BG/PS = Background/Point Source
ppm = parts per million

Depth (Ft.)		Sample Type & No.	Sample Rec. (Ft.,%)	SPT	USCS CODES	PID (ppm) ps/bg	Visual Description	Bore Detail	Elevation (Ft. MSL)
1							**TOPSOIL**, sand, organic silt, roots. 1.0'		
2		S-1	60%	NA	SP	0.1	**SAND**, medium grained, trace silt; loose; brown; dry.		
3									
4	4.0								
5									
6		S-2	75%	NA	SP	0.1			
7									
8	8.0								
9		S-3	80%	NA	SP	0.1			
10									

DRILLING CO.: Envirodynamics BAKER REP.: Rick Spitaler

DRILLER: Rob Morris BORING NO.: SB-19 SHEET 1 OF 2

Baker
Baker Environmental

TEST BORING AND WELL CONSTRUCTION RECORD

PROJECT: City of Gary J-Pit Phase II Investigation
PROJECT NO.: 25290-000-0000 BORING NO.: SB-19

SAMPLE TYPE
S = Split Spoon A = Auger
T = Shelby Tube W = Wash
R = Air Rotary C = Core
D = Denison P = Piston N = No Sample

DEFINITIONS
SPT = Standard Penetration Test (ASTM D1586)
PID = Photo Ionization Detector Measurement
MSL = Mean Sea Level
ps/bg = point source/background

Depth (Ft.)	Sample Type & No.	Sample Rec. (Ft.,%)	SPT	USCS CODES	PID (ppm) ps/bg	Visual Description	Bore Detail	Elevation (Ft. MSL)
11						**SAND**, medium grained, trace silt; loose; brown; dry.		
12 12.0								
13								
14	S-4	80%	NA	SP	0.1			
15								
16 16.0								
17								
18	S-5	80%	NA	SP	0	Collect SB-19-01 at 19'.		
19								
20 20.0						19.8' Wet. 20.0'		
21						End of Boring at 20'.		
22								
23								
24								
25								
26								
27								
28								
29								
30								

DRILLING CO.: Envirodynamics BAKER REP.: Rick Spitaler
DRILLER: Rob Morris BORING NO.: SB-19 SHEET 2 OF 2

Baker
Baker Environmental

TEST BORING AND WELL CONSTRUCTION RECORD

PROJECT: City of Gary J-Pit Phase II Investigation
PROJECT NO.: 24989-0-0-00100 BORING NAME: SB-20
COORDINATES: EAST: NORTH:
ELEVATION: SURFACE: DIAMETER: (inches)

Rig: Geoprobe 5400	Split Spoon	Casing	Augers	Core Barrel	Date	Progress (Ft.)	Weather	Depth to Water (Ft.)
Size (ID)		NA	NA	NA	11/08/02	20.0	Partly Cloudy; 60's	16.0
Length	4.0"							
Type	NA							
Hammer Wt.	NA							
Fall	NA							

Remarks:

SAMPLE TYPE
S = Split Spoon A = Auger
T = Shelby Tube W = Wash
R = Air Rotary C = Core
D = Denison P = Piston
N = No Sample

DEFINITIONS
SPT = Standard Penetration Test (ASTM D1586)
PID = Photo Ionization Detector Measurement
MSL = Mean Sea Level
BG/PS = Background/Point Source
ppm = parts per million

Depth (Ft.)	Sample Type & No.	Sample Rec. (Ft.,%)	SPT	USCS CODES	PID (ppm) ps/bg	Visual Description	Bore Detail	Elevation (Ft. MSL)
1						**TOPSOIL**, silt, sand, gravel, concrete. 1.0'		
2	S-1	70%	NA	SP	0.0	**SAND**, fine to medium grained, trace silt; light brown; dry.		
3								
4 4.0								
5								
6	S-2	80%	NA	SP	0.0			
7								
8 8.0								
9	S-3	80%	NA	SP	0.0			
10								

DRILLING CO.: Envirodynamics BAKER REP.: Rick Spitaler
DRILLER: Rob Morris BORING NO.: SB-20 SHEET 1 OF 2

Baker
Baker Environmental

TEST BORING AND WELL CONSTRUCTION RECORD

PROJECT: City of Gary J-Pit Phase II Investigation
PROJECT NO.: 25290-000-0000 BORING NO.: SB-20

SAMPLE TYPE
S = Split Spoon A = Auger
T = Shelby Tube W = Wash
R = Air Rotary C = Core
D = Denison P = Piston N = No Sample

DEFINITIONS
SPT = Standard Penetration Test (ASTM D1586)
PID = Photo Ionization Detector Measurement
MSL = Mean Sea Level
ps/bg = point source/background

Depth (Ft.)	Sample Type & No.	Sample Rec. (Ft.,%)	SPT	USCS CODES	PID (ppm) ps/bg	Visual Description	Bore Detail	Elevation (Ft. MSL)
11						SAND, fine to medium grained, trace silt; light brown; dry.		
12 12.0								
13								
14	S-4	80%	NA	SP	0.0	Banding (organic silt).		
15						Collect SB-20-01 at 15'.		
16 16.0						Wet.		
17								
18	S-5	95%	NA	SP	0.0			
19								
20 20.0						20.0'		
21						End of Boring at 20'.		
22								
23								
24								
25								
26								
27								
28								
29								
30								

DRILLING CO.: Envirodynamics BAKER REP.: Rick Spitaler
DRILLER: Rob Morris BORING NO.: SB-20 SHEET 2 OF 2

Baker
Baker Environmental

TEST BORING AND WELL CONSTRUCTION RECORD

PROJECT: City of Gary J-Pit Phase II Investigation
PROJECT NO.: 24989-0-0-00100 BORING NAME: SB-21
COORDINATES: EAST: NORTH:
ELEVATION: SURFACE: DIAMETER: (inches)

Rig: Geoprobe 5400	Split Spoon	Casing	Augers	Core Barrel	Date	Progress (Ft.)	Weather	Depth to Water (Ft.)
Size (ID)		NA	NA	NA	11/08/02	12.0	Partly Cloudy; 60's	10.0
Length	4.0"							
Type	NA							
Hammer Wt.	NA							
Fall	NA							

Remarks:

SAMPLE TYPE
S = Split Spoon A = Auger
T = Shelby Tube W = Wash
R = Air Rotary C = Core
D = Denison P = Piston
N = No Sample

DEFINITIONS
SPT = Standard Penetration Test (ASTM D1586)
PID = Photo Ionization Detector Measurement
MSL = Mean Sea Level
BG/PS = Background/Point Source
ppm = parts per million

Depth (Ft.)		Sample Type & No.	Sample Rec. (Ft.,%)	SPT	USCS CODES	PID (ppm) ps/bg	Visual Description	Bore Detail	Elevation (Ft. MSL)
1					FI		**FILL**, (gravel, black fines, glass, wood, rubber). 1.0'		
2		S-1	70%	NA		2.7	**FILL**, (sand), staining.		
3							Collect SB-21-01 at 2 to 4'.		
4	4.0				SP		Black organics, sand.		
5									
6		S-2	75%	NA	SP	0.9	Grades to **SAND**, medium grained, trace silt; grey; moist.		
7									
8	8.0								
9		S-3	70%	NA	SP	0.3			
10							Wet.		

DRILLING CO.: Envirodynamics BAKER REP.: Rick Spitaler
DRILLER: Rob Morris BORING NO.: SB-21 SHEET 1 OF 2

Baker
Baker Environmental

TEST BORING AND WELL CONSTRUCTION RECORD

PROJECT: City of Gary J-Pit Phase II Investigation
PROJECT NO.: 25290-000-0000 BORING NO.: SB-21

SAMPLE TYPE
S = Split Spoon A = Auger
T = Shelby Tube W = Wash
R = Air Rotary C = Core
D = Denison P = Piston N = No Sample

DEFINITIONS
SPT = Standard Penetration Test (ASTM D1586)
PID = Photo Ionization Detector Measurement
MSL = Mean Sea Level
ps/bg = point source/background

Depth (Ft.)		Sample Type & No.	Sample Rec. (Ft.,%)	SPT	USCS CODES	PID (ppm) ps/bg	Visual Description	Bore Detail	Elevation (Ft. MSL)
11									
12	12.0						12.0'		
							End of Boring at 12'.		
13									
14									
15									
16									
17									
18									
19									
20									
21									
22									
23									
24									
25									
26									
27									
28									
29									
30									

DRILLING CO.: Envirodynamics BAKER REP.: Rick Spitaler
DRILLER: Rob Morris BORING NO.: SB-21 SHEET 2 OF 2

Baker
Baker Environmental

TEST BORING AND WELL CONSTRUCTION RECORD

PROJECT: City of Gary J-Pit Phase II Investigation
PROJECT NO.: 24989-0-0-00100 BORING NAME: SB-22
COORDINATES: EAST: NORTH:
ELEVATION: SURFACE: DIAMETER: (inches)

Rig: Geoprobe 5400	Split Spoon	Casing	Augers	Core Barrel	Date	Progress (Ft.)	Weather	Depth to Water (Ft.)
Size (ID)		NA	NA	NA	11/08/02	12.0	Partly Cloudy; 60's	11.2
Length	4.0"							
Type	NA							
Hammer Wt.	NA							
Fall	NA							

Remarks:

SAMPLE TYPE
S = Split Spoon A = Auger
T = Shelby Tube W = Wash
R = Air Rotary C = Core
D = Denison P = Piston
N = No Sample

DEFINITIONS
SPT = Standard Penetration Test (ASTM D1586)
PID = Photo Ionization Detector Measurement
MSL = Mean Sea Level
BG/PS = Background/Point Source
ppm = parts per million

Depth (Ft.)	Sample Type & No.	Sample Rec. (Ft.,%)	SPT	USCS CODES	PID (ppm) ps/bg	Visual Description	Bore Detail	Elevation (Ft. MSL)
				SM	0.0	**TOPSOIL**, sand, some silt organics. 4.0"		
1, 2, 3, 4 (4.0)	S-1	75%	NA	SP	0.0	**SAND**, medium grained, trace silt; loose; yellow brown; dry.		
5, 6, 7, 8 (8.0)	S-2	75%	NA	SP	0.1			
9, 10	S-3	80%	NA	SP	0.2	Collect SB-22-01 at 9 to 11'.		

DRILLING CO.: Envirodynamics BAKER REP.: Rick Spitaler
DRILLER: Rob Morris BORING NO.: SB-22 SHEET 1 OF 2

Baker
Baker Environmental

TEST BORING AND WELL CONSTRUCTION RECORD

PROJECT: City of Gary J-Pit Phase II Investigation
PROJECT NO.: 25290-000-0000 BORING NO.: SB-22

SAMPLE TYPE
S = Split Spoon A = Auger
T = Shelby Tube W = Wash
R = Air Rotary C = Core
D = Denison P = Piston N = No Sample

DEFINITIONS
SPT = Standard Penetration Test (ASTM D1586)
PID = Photo Ionization Detector Measurement
MSL = Mean Sea Level
ps/bg = point source/background

Depth (Ft.)	Sample Type & No.	Sample Rec. (Ft.,%)	SPT	USCS CODES	PID (ppm) ps/bg	Visual Description	Bore Detail	Elevation (Ft. MSL)
11						11.2'		
12	12.0					Wet. 12.0'		
						End of Boring at 12'.		
13								
14								
15								
16								
17								
18								
19								
20								
21								
22								
23								
24								
25								
26								
27								
28								
29								
30								

DRILLING CO.: Envirodynamics BAKER REP.: Rick Spitaler
DRILLER: Rob Morris BORING NO.: SB-22 SHEET 2 OF 2

Baker
Baker Environmental

TEST BORING AND WELL CONSTRUCTION RECORD

PROJECT: City of Gary J-Pit Phase II Investigation
PROJECT NO.: 24989-0-0-00100 BORING NAME: SB-23
COORDINATES: EAST: NORTH:
ELEVATION: SURFACE: DIAMETER: (inches)

Rig: Geoprobe 5400	Split Spoon	Casing	Augers	Core Barrel	Date	Progress (Ft.)	Weather	Depth to Water (Ft.)
Size (ID)		NA	NA	NA	11/08/02	16.0	Partly Cloudy; 60's	12.0
Length	4.0"							
Type	NA							
Hammer Wt.	NA							
Fall	NA							

Remarks:

SAMPLE TYPE
S = Split Spoon A = Auger
T = Shelby Tube W = Wash
R = Air Rotary C = Core
D = Denison P = Piston
N = No Sample

DEFINITIONS
SPT = Standard Penetration Test (ASTM D1586)
PID = Photo Ionization Detector Measurement
MSL = Mean Sea Level
BG/PS = Background/Point Source
ppm = parts per million

Depth (Ft.)	Sample Type & No.	Sample Rec. (Ft.,%)	SPT	USCS CODES	PID (ppm) ps/bg	Visual Description	Bore Detail	Elevation (Ft. MSL)
						TOPSOIL, organic silt, roots. 0.5'		
1, 2, 3, 4 (4.0)	S-1	75%	NA	SP	0.0	**SAND**, fine to medium grained, trace silt; loose; light brown; dry.		
5, 6, 7, 8 (8.0)	S-2	70%	NA	SP	0.1			
9, 10	S-3	75%	NA	SP	0.2	Collect SB-23-01 at 9.5 to 11.5'.		

DRILLING CO.: Envirodynamics BAKER REP.: Rick Spitaler
DRILLER: Rob Morris BORING NO.: SB-23 SHEET 1 OF 2

Baker
Baker Environmental

TEST BORING AND WELL CONSTRUCTION RECORD

PROJECT: City of Gary J-Pit Phase II Investigation
PROJECT NO.: 25290-000-0000 BORING NO.: SB-23

SAMPLE TYPE
S = Split Spoon A = Auger
T = Shelby Tube W = Wash
R = Air Rotary C = Core
D = Denison P = Piston N = No Sample

DEFINITIONS
SPT = Standard Penetration Test (ASTM D1586)
PID = Photo Ionization Detector Measurement
MSL = Mean Sea Level
ps/bg = point source/background

Depth (Ft.)	Sample Type & No.	Sample Rec. (Ft.,%)	SPT	USCS CODES	PID (ppm) ps/bg	Visual Description	Bore Detail	Elevation (Ft. MSL)
11						**SAND**, fine to medium grained, trace silt; loose; light brown; moist to wet.		
12 12.0								
13								
14	S-4	95%	NA	SP	0.1			
15								
16 16.0						16.0'		
17						End of Boring at 16'.		
18								
19								
20								
21								
22								
23								
24								
25								
26								
27								
28								
29								
30								

DRILLING CO.: Envirodynamics BAKER REP.: Rick Spitaler
DRILLER: Rob Morris BORING NO.: SB-23 SHEET 2 OF 2

Baker

Baker Environmental

TEST BORING AND WELL CONSTRUCTION RECORD

PROJECT:	City of Gary J-Pit Phase II Investigation		
PROJECT NO.:	24989-0-0-00100	BORING NAME:	SB-24 / MW-1
COORDINATES: EAST:	2861754.49	NORTH:	2808804.16
ELEVATION: SURFACE:	605.00	DIAMETER: (inches)	

Rig: Geoprobe 5400	Split Spoon	Casing	Augers	Core Barrel	Date	Progress (Ft.)	Weather	Depth to Water (Ft.)
Size (ID)		NA	NA	NA	11/13/02	28.0	Clear, 60's	22.0
Length	4.0"							
Type	NA							
Hammer Wt.	NA							
Fall	NA							

Remarks:

SAMPLE TYPE

S = Split Spoon A = Auger
T = Shelby Tube W = Wash
R = Air Rotary C = Core
D = Denison P = Piston
N = No Sample

DEFINITIONS

SPT = Standard Penetration Test (ASTM D1586)
PID = Photo Ionization Detector Measurement
MSL = Mean Sea Level
BG/PS = Background/Point Source
ppm = parts per million

Depth (Ft.)	Sample Type & No.	Sample Rec. (Ft.,%)	SPT	USCS CODES	PID (ppm) ps/bg	Visual Description	Bore Detail	Elevation (Ft. MSL)
						TOPSOIL, roots, sand. 0.5'		
1						**SAND**, medium grained, trace silt; loose; light brown; dry.		604.00
2	S-1	55%	NA	SP	0.1	Collect SB-24 at 0 to 2.5'.		603.00
3								602.00
4	4.0							601.00
5								600.00
6	S-2	85%	NA	SP	0.0			599.00
7								598.00
8	8.0							597.00
9	S-3	90%	NA	SP	0.0			596.00
10								595.00

DRILLING CO.:	Paramount	BAKER REP.:	Rick Spitaler
DRILLER:	Keith Kreiser / Ed Deluca	BORING NO.:	SB-24 / MW-1 SHEET 1 OF 2

Baker
Baker Environmental

TEST BORING AND WELL CONSTRUCTION RECORD

PROJECT: City of Gary J-Pit Phase II Investigation
PROJECT NO.: 25290-000-0000 BORING NO.: SB-24 / MW-1

SAMPLE TYPE
S = Split Spoon A = Auger
T = Shelby Tube W = Wash
R = Air Rotary C = Core
D = Denison P = Piston N = No Sample

DEFINITIONS
SPT = Standard Penetration Test (ASTM D1586)
PID = Photo Ionization Detector Measurement
MSL = Mean Sea Level
ps/bg = point source/background

Depth (Ft.)		Sample Type & No.	Sample Rec. (Ft.,%)	SPT	USCS CODES	PID (ppm) ps/bg	Visual Description	Bore Detail	Elevation (Ft. MSL)
11							**SAND**, medium grained, trace silt; dense; light brown; dry.		594.00
12	12.0								593.00
13									592.00
14		S-4	90%	NA	SP	0.0			591.00
15									590.00
16	16.0								589.00
17									588.00
18		S-5	85%	NA	SP	0.1			587.00
19									586.00
20	20.0								585.00
21									584.00
22		S-6	80%	NA	SP	0.0	Moist to wet.		583.00
23									582.00
24	24.0								581.00
25							Grades to **SAND**, medium to course grained, little gravel; light brown; wet.		580.00
26		S-7	90%	NA	SP	0.0			579.00
27									578.00
28	28.0						**28.0'**		577.00
29							End of Boring at 28'.		576.00
30									575.00

DRILLING CO.: Paramount BAKER REP.: Rick Spitaler
DRILLER: Keith Kreiser / Ed Deluca BORING NO.: SB-24 / MW-1 SHEET 2 OF 2

Baker

Baker Environmental

TEST BORING AND WELL CONSTRUCTION RECORD

PROJECT: City of Gary J-Pit Phase II Investigation

PROJECT NO.: 24989-0-0-00100 BORING NAME: SB-25

COORDINATES: EAST: NORTH:

ELEVATION: SURFACE: DIAMETER: (inches)

Rig: Geoprobe 5400	Split Spoon	Casing	Augers	Core Barrel	Date	Progress (Ft.)	Weather	Depth to Water (Ft.)
Size (ID)		NA	NA	NA	11/13/02	22.0	Clear, 50's	22.0
Length	4.0"							
Type	NA							
Hammer Wt.	NA							
Fall	NA							

Remarks:

SAMPLE TYPE

S = Split Spoon A = Auger
T = Shelby Tube W = Wash
R = Air Rotary C = Core
D = Denison P = Piston
N = No Sample

DEFINITIONS

SPT = Standard Penetration Test (ASTM D1586)
PID = Photo Ionization Detector Measurement
MSL = Mean Sea Level
BG/PS = Background/Point Source
ppm = parts per million

Depth (Ft.)		Sample Type & No.	Sample Rec. (Ft.,%)	SPT	USCS CODES	PID (ppm) ps/bg	Visual Description	Bore Detail	Elevation (Ft. MSL)
							TOPSOIL. 0.5'		
1									
2		S-1	65%	NA	SP	0.0	**SAND**, fine to medium grained, trace silt; loose; light brown; dry.		
3									
4	4.0								
5									
6		S-2	80%	NA	SP	0.1			
7									
8	8.0								
9		S-3	70%	NA	SP	0.0			
10									

DRILLING CO.: Envirodynamics BAKER REP.: Rick Spitaler

DRILLER: Rob Morris BORING NO.: SB-25 SHEET 1 OF 2

Baker
Baker Environmental

TEST BORING AND WELL CONSTRUCTION RECORD

PROJECT: City of Gary J-Pit Phase II Investigation
PROJECT NO.: 25290-000-0000 BORING NO.: SB-25

SAMPLE TYPE
S = Split Spoon A = Auger
T = Shelby Tube W = Wash
R = Air Rotary C = Core
D = Denison P = Piston N = No Sample

DEFINITIONS
SPT = Standard Penetration Test (ASTM D1586)
PID = Photo Ionization Detector Measurement
MSL = Mean Sea Level
ps/bg = point source/background

Depth (Ft.)	Sample Type & No.	Sample Rec. (Ft.,%)	SPT	USCS CODES	PID (ppm) ps/bg	Visual Description	Bore Detail	Elevation (Ft. MSL)
11						**SAND**, fine to medium grained, trace silt; dense; light brown; dry.		
12 12.0								
13								
14	S-4	85%	NA	SP	0.1			
15								
16 16.0								
17								
18	S-5	70%	NA	SP	0			
19								
20 20.0						Collect SB-25-01 at 20'.		
21								
22 22.0						Moist. **22.0'**		
23						End of Boring at 22'. Refusal due to dense sand.		
24								
25								
26								
27								
28								
29								
30								

DRILLING CO.: Envirodynamics BAKER REP.: Rick Spitaler
DRILLER: Rob Morris BORING NO.: SB-25 SHEET 2 OF 2

Baker

Baker Environmental

TEST BORING AND WELL CONSTRUCTION RECORD

PROJECT:	City of Gary J-Pit Phase II Investigation		
PROJECT NO.:	24989-0-0-00100	BORING NAME:	SB-26 / MW-4
COORDINATES:	EAST: 2862126.33	NORTH:	2309380.98
ELEVATION:	SURFACE: 602.50	DIAMETER: (inches)	

Rig: Geoprobe 5400	Split Spoon	Casing	Augers	Core Barrel	Date	Progress (Ft.)	Weather	Depth to Water (Ft.)
Size (ID)		NA	NA	NA	11/14/02	20.0	Overcast, 40's	13.5
Length	4.0"							
Type	NA							
Hammer Wt.	NA							
Fall	NA							

Remarks:

SAMPLE TYPE

S = Split Spoon A = Auger
T = Shelby Tube W = Wash
R = Air Rotary C = Core
D = Denison P = Piston
N = No Sample

DEFINITIONS

SPT = Standard Penetration Test (ASTM D1586)
PID = Photo Ionization Detector Measurement
MSL = Mean Sea Level
BG/PS = Background/Point Source
ppm = parts per million

Depth (Ft.)		Sample Type & No.	Sample Rec. (Ft.,%)	SPT	USCS CODES	PID (ppm) ps/bg	Visual Description	Bore Detail	Elevation (Ft. MSL)
							TOPSOIL, silt, sand, roots, organics. 0.5'		
1									601.50
							SAND, medium grained; loose; light brown; dry.		
2		S-1	80%	NA	SP	0.0			600.50
3									599.50
4	4.0								598.50
5									597.50
6		S-2	75%	NA	SP	0.0			596.50
7									595.50
8	8.0								594.50
9		S-3	80%	NA	SP	0.0			593.50
10									592.50

DRILLING CO.:	Paramount	BAKER REP.:	Rick Spitaler
DRILLER:	Keith Kreisher	BORING NO.:	SB-26 / MW-4 SHEET 1 OF 2

Baker
Baker Environmental

TEST BORING AND WELL CONSTRUCTION RECORD

PROJECT: City of Gary J-Pit Phase II Investigation
PROJECT NO.: 25290-000-0000 BORING NO.: SB-26 / MW-4

SAMPLE TYPE
S = Split Spoon A = Auger
T = Shelby Tube W = Wash
R = Air Rotary C = Core
D = Denison P = Piston N = No Sample

DEFINITIONS
SPT = Standard Penetration Test (ASTM D1586)
PID = Photo Ionization Detector Measurement
MSL = Mean Sea Level
ps/bg = point source/background

Depth (Ft.)	Sample Type & No.	Sample Rec. (Ft.,%)	SPT	USCS CODES	PID (ppm) ps/bg	Visual Description	Bore Detail	Elevation (Ft. MSL)
11						**SAND**, medium grained, trace silt; dense; dry.		591.50
12 12.0						Collect SB-26-01 at 12'.		590.50
13								589.50
14	S-4	80%	NA	SP	0.0	Wet.		588.50
15								587.50
16 16.0								586.50
17								585.50
18	S-5	80%	NA	SP	0.0			584.50
19								583.50
20						19.5' End of Boring at 19.5'.		582.50
21								581.50
22								580.50
23								579.50
24								578.50
25								577.50
26								576.50
27								575.50
28								574.50
29								573.50
30								572.50

DRILLING CO.: Paramount BAKER REP.: Rick Spitaler
DRILLER: Keith Kreisher BORING NO.: SB-26 / MW-4 SHEET 2 OF 2

Baker
Baker Environmental

TEST BORING AND WELL CONSTRUCTION RECORD

PROJECT:	City of Gary J-Pit Phase II Investigation		
PROJECT NO.:	24989-0-0-00100	BORING NAME:	SB-27 / MW-10
COORDINATES: EAST:	2859936.76	NORTH:	2307544.68
ELEVATION: SURFACE:	610.10	DIAMETER: (inches)	

Rig: Geoprobe 5400	Split Spoon	Casing	Augers	Core Barrel	Date	Progress (Ft.)	Weather	Depth to Water (Ft.)
Size (ID)		NA	NA	NA	11/19/02	24.0	Clear, 30's	17.5
Length	4.0"							
Type	NA							
Hammer Wt.	NA							
Fall	NA							

Remarks:

SAMPLE TYPE
S = Split Spoon A = Auger
T = Shelby Tube W = Wash
R = Air Rotary C = Core
D = Denison P = Piston
N = No Sample

DEFINITIONS
SPT = Standard Penetration Test (ASTM D1586)
PID = Photo Ionization Detector Measurement
MSL = Mean Sea Level
BG/PS = Background/Point Source
ppm = parts per million

Depth (Ft.)	Sample Type & No.	Sample Rec. (Ft.,%)	SPT	USCS CODES	PID (ppm) ps/bg	Visual Description	Bore Detail	Elevation (Ft. MSL)
						TOPSOIL, roots, little gravel. 0.5'		
1								609.10
2	S-1	75%	NA	SP	0.1	**SAND**, fine to medium grained, trace silt; dense; light brown; moist.		608.10
3								607.10
4	4.0							606.10
5								605.10
6	S-2	80%	NA	SP	0.0	Dry.		604.10
7								603.10
8	8.0							602.10
9	S-3	80%	NA	SP	0.0			601.10
10								600.10

DRILLING CO.:	Paramount	BAKER REP.:	Rick Spitaler
DRILLER:	Ed Delucca	BORING NO.:	SB-27 / MW-10 SHEET 1 OF 2

Baker
Baker Environmental

TEST BORING AND WELL CONSTRUCTION RECORD

PROJECT: City of Gary J-Pit Phase II Investigation
PROJECT NO.: 25290-000-0000 BORING NO.: SB-27 / MW-10

SAMPLE TYPE
S = Split Spoon A = Auger
T = Shelby Tube W = Wash
R = Air Rotary C = Core
D = Denison P = Piston N = No Sample

DEFINITIONS
SPT = Standard Penetration Test (ASTM D1586)
PID = Photo Ionization Detector Measurement
MSL = Mean Sea Level
ps/bg = point source/background

Depth (Ft.)		Sample Type & No.	Sample Rec. (Ft.,%)	SPT	USCS CODES	PID (ppm) ps/bg	Visual Description	Bore Detail	Elevation (Ft. MSL)
11							**SAND**, fine to medium grained, trace silt; dense; light brown; dry.		599.10
12	12.0								598.10
13									597.10
14		S-4	80%	NA	SP	0.0	Wet.		596.10
15									595.10
16	16.0								594.10
17							Collect SB-27-01 at 17'.		593.10
18		S-5	90%	NA	SP	0.0			592.10
19									591.10
20	20.0								590.10
21							21.0'		589.10
22		S-6	100%	NA	SW-SP	0.0	**SAND**, medium to course grained seam, trace gravel. 21.8'		588.10
23									587.10
24	24.0						24.0'		586.10
25							End of Boring at 24'.		585.10
26									584.10
27									583.10
28									582.10
29									581.10
30									580.10

DRILLING CO.: Paramount BAKER REP.: Rick Spitaler
DRILLER: Ed Delucca BORING NO.: SB-27 / MW-1(SHEET 2 OF 2

Baker

Baker Environmental

TEST BORING AND WELL CONSTRUCTION RECORD

PROJECT:	City of Gary J-Pit Phase II Investigation		
PROJECT NO.:	24989-0-0-00100	BORING NAME:	SB-28 / MW-9
COORDINATES: EAST:	2862246.52	NORTH:	2306812.91
ELEVATION: SURFACE:	609.30	DIAMETER: (inches)	

Rig: Geoprobe 5400	Split Spoon	Casing	Augers	Core Barrel	Date	Progress (Ft.)	Weather	Depth to Water (Ft.)
Size (ID)		NA	NA	NA	11/20/02	24.0	Overcast, 40's	20.5
Length	4.0"							
Type	NA							
Hammer Wt.	NA							
Fall	NA							

Remarks: North of garage, in alley.

SAMPLE TYPE

S = Split Spoon A = Auger
T = Shelby Tube W = Wash
R = Air Rotary C = Core
D = Denison P = Piston
N = No Sample

DEFINITIONS

SPT = Standard Penetration Test (ASTM D1586)
PID = Photo Ionization Detector Measurement
MSL = Mean Sea Level
BG/PS = Background/Point Source
ppm = parts per million

Depth (Ft.)		Sample Type & No.	Sample Rec. (Ft.,%)	SPT	USCS CODES	PID (ppm) ps/bg	Visual Description	Bore Detail	Elevation (Ft. MSL)
							TOPSOIL, fill, (gravel, sand, clay). 0.5'		
1							**SAND**, medium grained, trace gravel.		608.30
2		S-1	85%	NA	FI	0.0	Collect SB-28-01 at 2'.		607.30
3							3.0'		606.30
4	4.0						**SAND**, medium grained, trace silt; loose; light brown; dry.		605.30
5									604.30
6		S-2	80%	NA	SP	0.0			603.30
7									602.30
8	8.0								601.30
9		S-3	80%	NA	SP	0.0			600.30
10									599.30

DRILLING CO.:	Paramount	BAKER REP.:	Rick Spitaler
DRILLER:	Keith Kreisher	BORING NO.:	SB-28 / MW-9 SHEET 1 OF 2

Baker
Baker Environmental

TEST BORING AND WELL CONSTRUCTION RECORD

PROJECT: City of Gary J-Pit Phase II Investigation
PROJECT NO.: 25290-000-0000 BORING NO.: SB-28-02 / MW-9

SAMPLE TYPE
S = Split Spoon A = Auger
T = Shelby Tube W = Wash
R = Air Rotary C = Core
D = Denison P = Piston N = No Sample

DEFINITIONS
SPT = Standard Penetration Test (ASTM D1586)
PID = Photo Ionization Detector Measurement
MSL = Mean Sea Level
ps/bg = point source/background

Depth (Ft.)		Sample Type & No.	Sample Rec. (Ft.,%)	SPT	USCS CODES	PID (ppm) ps/bg	Visual Description	Bore Detail	Elevation (Ft. MSL)
11							**SAND**, medium grained, trace silt; loose; light brown; dry.		598.30
12	12.0								597.30
13									596.30
14		S-4	80%	NA	SP	0.0			595.30
15									594.30
16	16.0								593.30
17									592.30
18		S-5	80%	NA	SP	0.0			591.30
19									590.30
20	20.0						Collect SB-28-02 at 20'. Wet.		589.30
21									588.30
22		S-6	80%	NA	SP	0.0			587.30
23									586.30
24	24.0						**24.0'**		585.30
25							End of Boring at 24'.		584.30
26									583.30
27									582.30
28									581.30
29									580.30
30									579.30

DRILLING CO.: Paramount BAKER REP.: Rick Spitaler
DRILLER: Keith Kreisher BORING NO.: SB-28 / MW-9 SHEET 2 OF 2

Baker
Baker Environmental

TEST BORING AND WELL CONSTRUCTION RECORD

PROJECT: City of Gary J-Pit Phase II Investigation
PROJECT NO.: 24989-0-0-00100 BORING NAME: SB-29 / MW-13
COORDINATES: EAST: 2861377.85 NORTH: 2306280.56
ELEVATION: SURFACE: 606.10 DIAMETER: (inches)

Rig: Geoprobe 5400	Split Spoon	Casing	Augers	Core Barrel	Date	Progress (Ft.)	Weather	Depth to Water (Ft.)
Size (ID)		NA	NA	NA	11/19/02	16.5	Partly Cloudy, 50's	10.5
Length	4.0"							
Type	NA							
Hammer Wt.	NA							
Fall	NA							

Remarks:

SAMPLE TYPE
S = Split Spoon A = Auger
T = Shelby Tube W = Wash
R = Air Rotary C = Core
D = Denison P = Piston
N = No Sample

DEFINITIONS
SPT = Standard Penetration Test (ASTM D1586)
PID = Photo Ionization Detector Measurement
MSL = Mean Sea Level
BG/PS = Background/Point Source
ppm = parts per million

Depth (Ft.)		Sample Type & No.	Sample Rec. (Ft.,%)	SPT	USCS CODES	PID (ppm) ps/bg	Visual Description	Bore Detail	Elevation (Ft. MSL)
1							**TOPSOIL**, grass, roots; black. 0.5'		605.10
2		S-1	75%	NA	SP	0.0	**SAND**, medium grained, trace silt; loose; light brown; dry.		604.10
3							Collect SB-29-01/MS/MSD at 3'.		603.10
4	4.0								602.10
5									601.10
6		S-2	80%	NA	SP	0.0			600.10
7									599.10
8	8.0						Banding.		598.10
9		S-3	80%	NA	SP	0.0			597.10
10									596.10

DRILLING CO.: Paramount BAKER REP.: Rick Spitaler
DRILLER: Ed Delucca BORING NO.: SB-29 / MW-13 SHEET 1 OF 2

Baker
Baker Environmental

TEST BORING AND WELL CONSTRUCTION RECORD

PROJECT: City of Gary J-Pit Phase II Investigation
PROJECT NO.: 25290-000-0000 BORING NO.: SB-29 / MW-13

SAMPLE TYPE
S = Split Spoon A = Auger
T = Shelby Tube W = Wash
R = Air Rotary C = Core
D = Denison P = Piston N = No Sample

DEFINITIONS
SPT = Standard Penetration Test (ASTM D1586)
PID = Photo Ionization Detector Measurement
MSL = Mean Sea Level
ps/bg = point source/background

Depth (Ft.)	Sample Type & No.	Sample Rec. (Ft.,%)	SPT	USCS CODES	PID (ppm) ps/bg	Visual Description	Bore Detail	Elevation (Ft. MSL)
11						**SAND**, medium grained, trace silt; dense; light brown; wet.		595.10
12	12.0							594.10
13								593.10
14		S-4	95%	NA	SP	0.0		592.10
15								591.10
16	16.0							590.10
	16.5					16.5'		
17						End of Boring at 16.5'.		589.10
18								588.10
19								587.10
20								586.10
21								585.10
22								584.10
23								583.10
24								582.10
25								581.10
26								580.10
27								579.10
28								578.10
29								577.10
30								576.10

DRILLING CO.: Paramount BAKER REP.: Rick Spitaler
DRILLER: Ed Delucca BORING NO.: SB-29 / MW-13 SHEET 2 OF 2

Baker
Baker Environmental

TEST BORING AND WELL CONSTRUCTION RECORD

PROJECT:	City of Gary J-Pit Phase II Investigation		
PROJECT NO.:	24989-0-0-00100	BORING NAME:	SB-30 / MW-15
COORDINATES:	EAST: 2859996.65	NORTH:	2308771.47
ELEVATION:	SURFACE: 607.50	DIAMETER: (inches)	

Rig: Geoprobe 5400	Split Spoon	Casing	Augers	Core Barrel	Date	Progress (Ft.)	Weather	Depth to Water (Ft.)
Size (ID)		NA	NA	NA	11/20/02	23.0	Overcast, 40's	16.5
Length	4.0"							
Type	NA							
Hammer Wt.	NA							
Fall	NA							

Remarks: North of garage, in alley.

SAMPLE TYPE
S = Split Spoon A = Auger
T = Shelby Tube W = Wash
R = Air Rotary C = Core
D = Denison P = Piston
N = No Sample

DEFINITIONS
SPT = Standard Penetration Test (ASTM D1586)
PID = Photo Ionization Detector Measurement
MSL = Mean Sea Level
BG/PS = Background/Point Source
ppm = parts per million

Depth (Ft.)		Sample Type & No.	Sample Rec. (Ft.,%)	SPT	USCS CODES	PID (ppm) ps/bg	Visual Description	Bore Detail	Elevation (Ft. MSL)
1							**FILL**, (silt, sand, stone, trace asphalt, concrete).		606.50
2		S-1	65%	NA	FI	0.0			605.50
3							3.0'		604.50
4	4.0						**SAND**, medium grained, trace silt; loose; light brown; dry.		603.50
5									602.50
6		S-2	85%	NA	SP	0.0			601.50
7									600.50
8	8.0								599.50
9		S-3	80%	NA	SP	0.0	Dense.		598.50
10									597.50

DRILLING CO.:	Envirodynamics	BAKER REP.:	Rick Spitaler
DRILLER:	Rob Morris	BORING NO.:	SB-30 / MW-15 SHEET 1 OF 2

Baker
Baker Environmental

TEST BORING AND WELL CONSTRUCTION RECORD

PROJECT: City of Gary J-Pit Phase II Investigation
PROJECT NO.: 25290-000-0000 BORING NO.: SB-30 / MW-15

SAMPLE TYPE
S = Split Spoon A = Auger
T = Shelby Tube W = Wash
R = Air Rotary C = Core
D = Denison P = Piston N = No Sample

DEFINITIONS
SPT = Standard Penetration Test (ASTM D1586)
PID = Photo Ionization Detector Measurement
MSL = Mean Sea Level
ps/bg = point source/background

Depth (Ft.)		Sample Type & No.	Sample Rec. (Ft.,%)	SPT	USCS CODES	PID (ppm) ps/bg	Visual Description	Bore Detail	Elevation (Ft. MSL)
11							**SAND**, medium grained, trace silt; dense; light brown; dry.		596.50
12	12.0								595.50
13							Trace gravel.		594.50
14		S-4	80%	NA	SP	0.0	Collect SB-30-01 at 14'.		593.50
15									592.50
16	16.0						Moist		591.50
17							Wet.		590.50
18		S-5	80%	NA	SP	0.0			589.50
19									588.50
20	20.0								587.50
21									586.50
22		S-6	80%	NA	SP	0.0			585.50
23	23.0						23.0'		584.50
24							End of Boring at 23'.		583.50
25									582.50
26									581.50
27									580.50
28									579.50
29									578.50
30									577.50

DRILLING CO.: Envirodynamics BAKER REP.: Rick Spitaler
DRILLER: Rob Morris BORING NO.: SB-30 / MW-15 SHEET 2 OF 2

Baker

PROJECT	WELL	
J-Pit Phase II Investigation	MW-1	SHEET 1 OF 1

WELL COMPLETION DIAGRAM

Project Number :	B2529000000000	**Coordinates: Northing:**	2308804.160	**Easting:**	2861454.490
Drilling Contractor:	Paramount Environmental	**Description:**			
Drilling Method and Equipment:	Hollow Stem Auger				
Driller: Keith Kreiser / Ed Deluca	**Dates: Start :** 11/13/2002	**End :** 11/13/2002	**Logger :** Rick Spitaler		

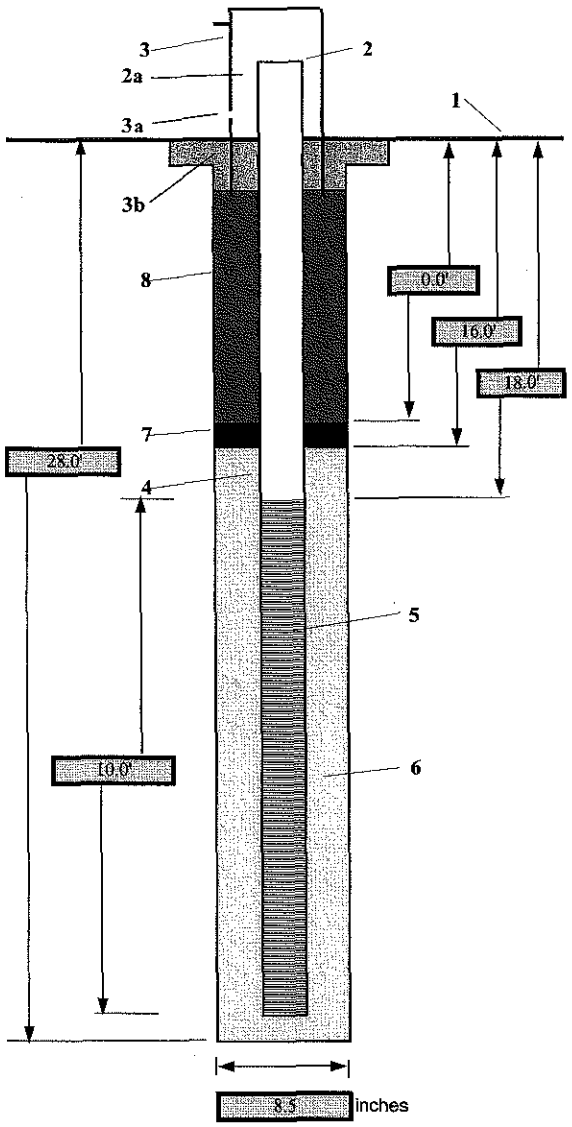

1- Ground elevation at well	605.00
2- Top of casing elevation	608.21
a) vent hole?	Yes
3- Wellhead protection cover type	Pro-Cover
a) drain tube?	No
b) concrete pad dimensions	2.5' x 2.5'
4- Well Casing	
a) Diameter (in)	2.0"
b) Material	PVC - Schedule 40
5- Type/slot size of screen	
a) Type	Machine Slotted
b) Screen Size	0.01
c) Screen Diameter (in)	2.0"
d) Material	PVC - Schedule 40
6- Type screen filter	#5 Sand Pack
a) Quantity used	
7- Type of seal	Bentonite Pellets
a) Quantity used	
b) Quantity estimated	
8- Grout	
a) Quantity used	
b) Quantity estimated	
b) Development method	Bailer
c) Development time	
9- Estimated development volume	
10- Comments	3' cap at base of screen (-')

Baker

PROJECT	WELL	
J-Pit Phase II Investigation	MW-2	SHEET 1 OF 1

WELL COMPLETION DIAGRAM

Project Number :	B252900000000	**Coordinates: Northing:**	20308756.20	**Easting:**	2862471.31
Drilling Contractor:	Paramount Environmental	**Description:**			
Drilling Method and Equipment:	Hollow Stem Auger				
Driller: Keith Kreiser / Ed Deluca	**Dates: Start :** 11/14/02	**End :** 11/14/2002	**Logger :** Rick Spitaler		

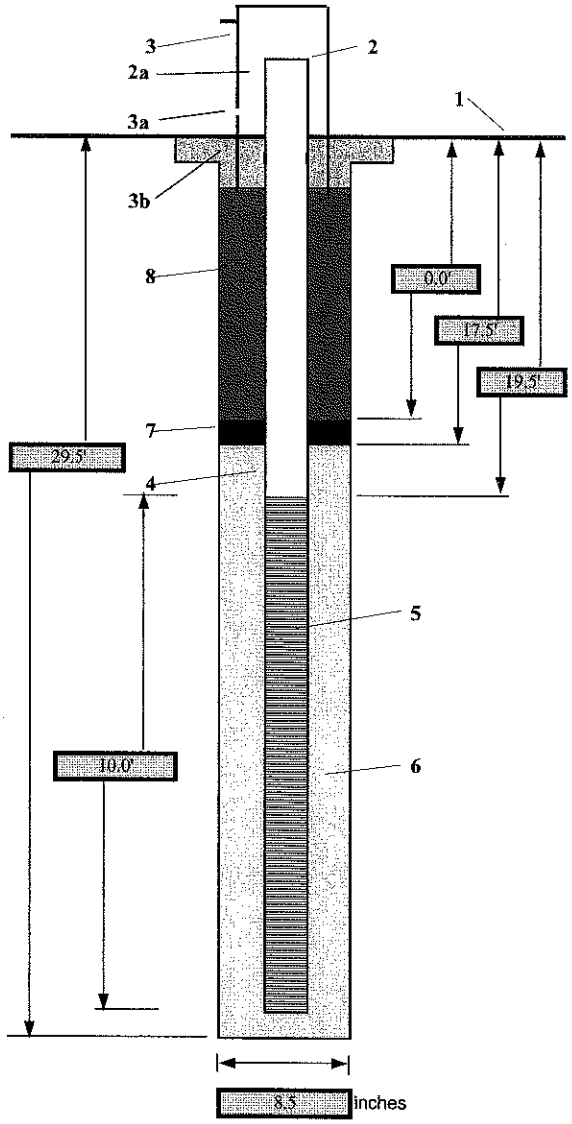

1- Ground elevation at well	609.10
2- Top of casing elevation	610.32
a) vent hole?	Yes
3- Wellhead protection cover type	Pro-Cover
a) drain tube?	No
b) concrete pad dimensions	2.5' x 2.5'
4- Well Casing	
a) Diameter (in)	2.0"
b) Material	PVC - Schedule 40
5- Type/slot size of screen	
a) Type	Machine Slotted
b) Screen Size	0.01
c) Screen Diameter (in)	2.0"
d) Material	PVC - Schedule 40
6- Type screen filter	#5 Sand Pack
a) Quantity used	
7- Type of seal	Bentonite Pellets
a) Quantity used	
b) Quantity estimated	
8- Grout	
a) Quantity used	
b) Quantity estimated	
b) Development method	Bailer
c) Development time	
9- Estimated development volume	
10- Comments	3" cap at base of screen (?)

Baker

PROJECT	WELL	
J-Pit Phase II Investigation	MW-3	SHEET 1 OF 1

WELL COMPLETION DIAGRAM

Project Number :	B252900000000	**Coordinates: Northing:**	2309283.20	**Easting:**	2862744.80		
Drilling Contractor:	Paramount Environmental	**Description:**					
Drilling Method and Equipment:	Hollow Stem Auger						
Driller:	Keith Kreiser / Ed Deluca	**Dates:**	**Start :** 11/14/2002	**End :**	11/14/2002	**Logger :**	Rick Spitaler

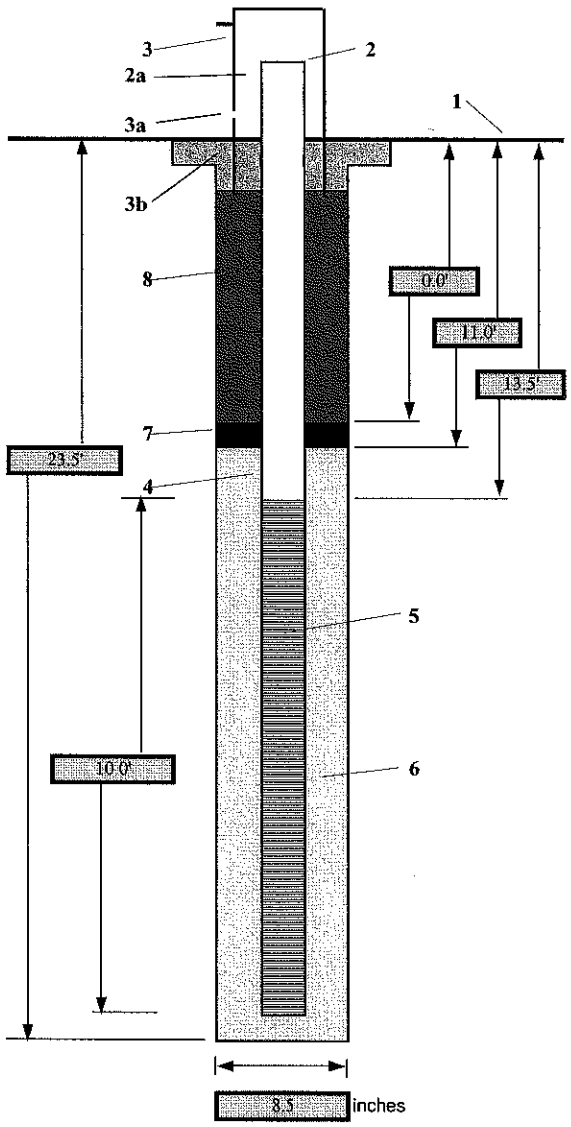

1- Ground elevation at well	602.70
2- Top of casing elevation	605.52
a) vent hole?	Yes
3- Wellhead protection cover type	Pro-Cover
a) drain tube?	No
b) concrete pad dimensions	2.5' x 2.5'
4- Well Casing	
a) Diameter (in)	2.0"
b) Material	PVC - Schedule 40
5- Type/slot size of screen	
a) Type	Machine Slotted
b) Screen Size	0.01
c) Screen Diameter (in)	2.0"
d) Material	PVC - Schedule 40
6- Type screen filter	#5 Sand Pack
a) Quantity used	
7- Type of seal	Bentonite Pellets
a) Quantity used	
b) Quantity estimated	
8- Grout	
a) Quantity used	
b) Quantity estimated	
b) Development method	Bailer
c) Development time	
9- Estimated development volume	
10- Comments	3" cap at base of screen (?)

Baker

PROJECT	WELL	
J-Pit Phase II Investigation	MW-4	SHEET 1 OF 1

WELL COMPLETION DIAGRAM

Project Number :	B252900000000		**Coordinates: Northing:**	2309380.98		**Easting:**	2862126.33
Drilling Contractor:	Paramount Environmental		**Description:**				
Drilling Method and Equipment:	Hollow Stem Auger						
Driller:	Keith Kreiser / Ed Deluca	**Dates:**	**Start :**	11/04/02	**End :**	11/04/02	**Logger :** Rick Spitaler

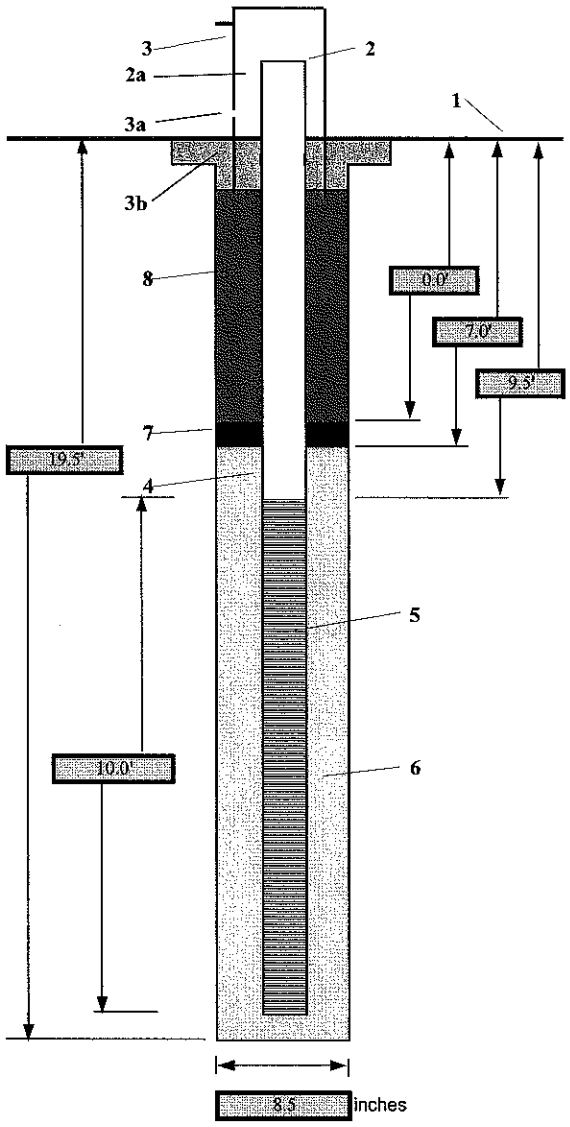

1- Ground elevation at well	602.50
2- Top of casing elevation	604.68
a) vent hole?	Yes
3- Wellhead protection cover type	Pro-Cover
a) drain tube?	No
b) concrete pad dimensions	2.5' x 2.5'
4- Well Casing	
a) Diameter (in)	2.0"
b) Material	PVC - Schedule 40
5- Type/slot size of screen	
a) Type	Machine Slotted
b) Screen Size	0.01
c) Screen Diameter (in)	2.0"
d) Material	PVC - Schedule 40
6- Type screen filter	#5 Sand Pack
a) Quantity used	
7- Type of seal	Bentonite Pellets
a) Quantity used	
b) Quantity estimated	
8- Grout	
a) Quantity used	
b) Quantity estimated	
b) Development method	Bailer
c) Development time	
9- Estimated development volume	
10- Comments	3" cap at base of screen (-)

Baker

PROJECT	WELL	
J-Pit Phase II Investigation	MW-5	SHEET 1 OF 1

WELL COMPLETION DIAGRAM

Project Number :	B252900000000	**Coordinates: Northing:**	2306629.83	**Easting:**	2862676.74
Drilling Contractor:	Paramount Environmental	**Description:**			
Drilling Method and Equipment:	Hollow Stem Auger				
Driller: Keith Kreiser / Ed Deluca	**Dates: Start :** 11/04/02	**End :** 11/04/02	**Logger :** Rick Spitaler		

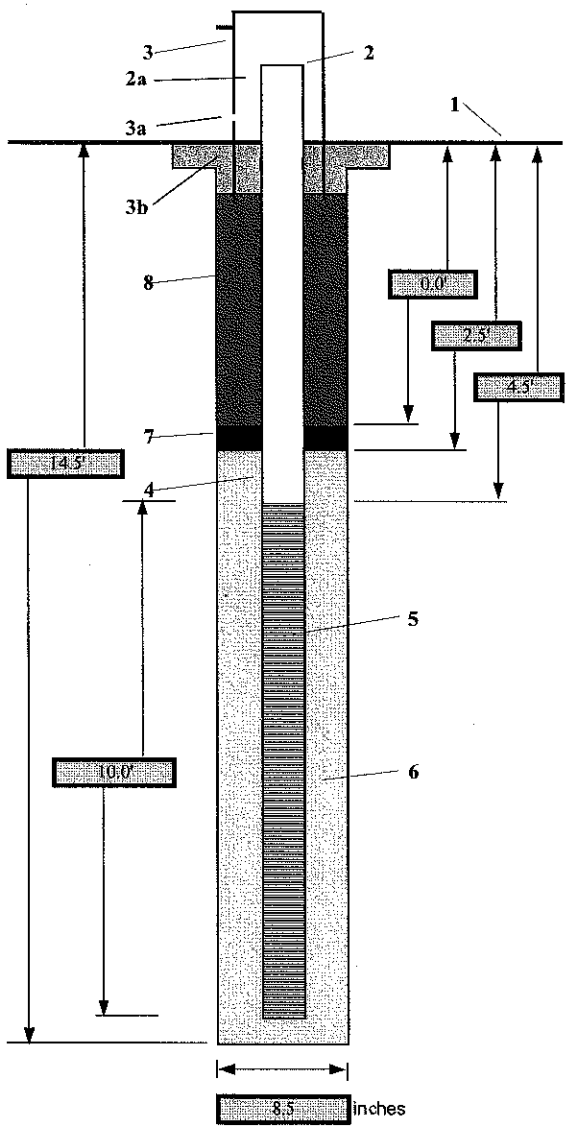

1- Ground elevation at well	609.10
2- Top of casing elevation	612.11
a) vent hole?	Yes
3- Wellhead protection cover type	Pro-Cover
a) drain tube?	No
b) concrete pad dimensions	2.5' x 2.5'
4- Well Casing	
a) Diameter (in)	2.0"
b) Material	PVC - Schedule 40
5- Type/slot size of screen	
a) Type	Machine Slotted
b) Screen Size	0.01
c) Screen Diameter (in)	2.0"
d) Material	PVC - Schedule 40
6- Type screen filter	#5 Sand Pack
a) Quantity used	
7- Type of seal	Bentonite Pellets
a) Quantity used	
b) Quantity estimated	
8- Grout	
a) Quantity used	
b) Quantity estimated	
b) Development method	Bailer
c) Development time	
9- Estimated development volume	
10- Comments	3" cap at base of screen (·)

Baker

PROJECT	WELL	
J-Pit Phase II Investigation	MW-6	SHEET 1 OF 1

WELL COMPLETION DIAGRAM

Project Number :	B252900000000	**Coordinates: Northing:**	2306178.70	**Easting:**	2863029.21		
Drilling Contractor:	Paramount Environmental	**Description:**					
Drilling Method and Equipment:	Hollow Stem Auger						
Driller:	Keith Kreiser / Ed Deluca	**Dates: Start :**	11/15/02	**End :**	11/15/02	**Logger :**	Rick Spitaler

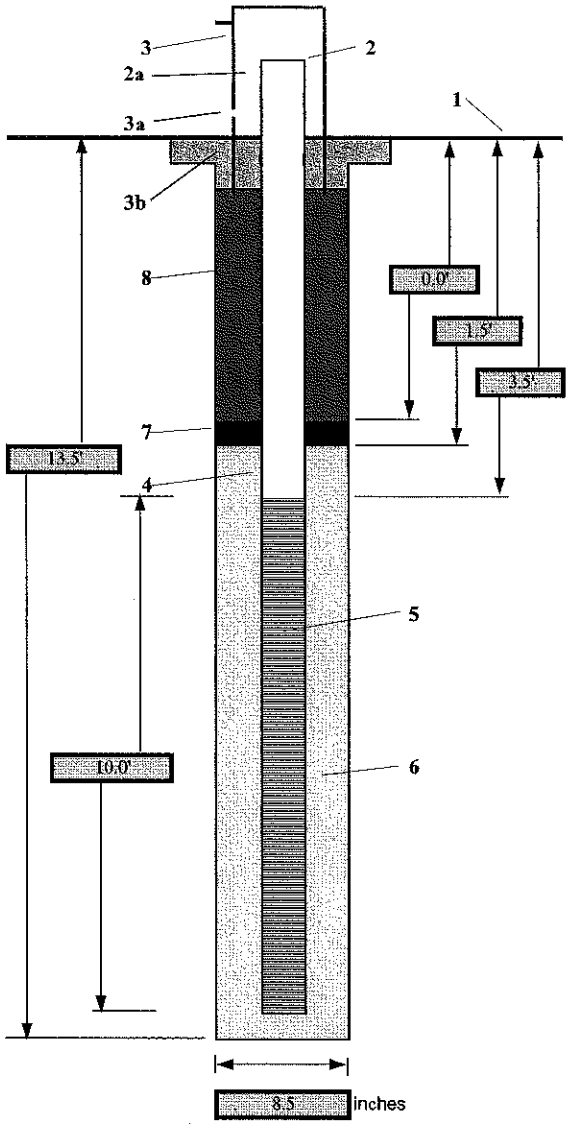

1- Ground elevation at well	607.50
2- Top of casing elevation	610.75
a) vent hole?	Yes
3- Wellhead protection cover type	Pro-Cover
a) drain tube?	No
b) concrete pad dimensions	2.5'x2.5'
4- Well Casing	
a) Diameter (in)	2.0"
b) Material	PVC - Schedule 40
5- Type/slot size of screen	
a) Type	Machine Slotted
b) Screen Size	0.01
c) Screen Diameter (in)	2.0"
d) Material	PVC - Schedule 40
6- Type screen filter	#5 Sand Pack
a) Quantity used	
7- Type of seal	Bentonite Pellets
a) Quantity used	
b) Quantity estimated	
8- Grout	
a) Quantity used	
b) Quantity estimated	
b) Development method	Bailer
c) Development time	
9- Estimated development volume	
10- Comments	3" cap at base of screen (-)

Baker

PROJECT	WELL	
J-Pit Phase II Investigation	MW-7	SHEET 1 OF 1

WELL COMPLETION DIAGRAM

Project Number :	B252900000000	**Coordinates: Northing:**	2305491.91	**Easting:**	2863413.08		
Drilling Contractor:	Paramount Environmental	**Description:**					
Drilling Method and Equipment:	Hollow Stem Auger						
Driller:	Keith Kreiser / Ed Deluca	**Dates: Start :**	11/15/02	**End :**	11/15/02	**Logger :**	Rick Spitaler

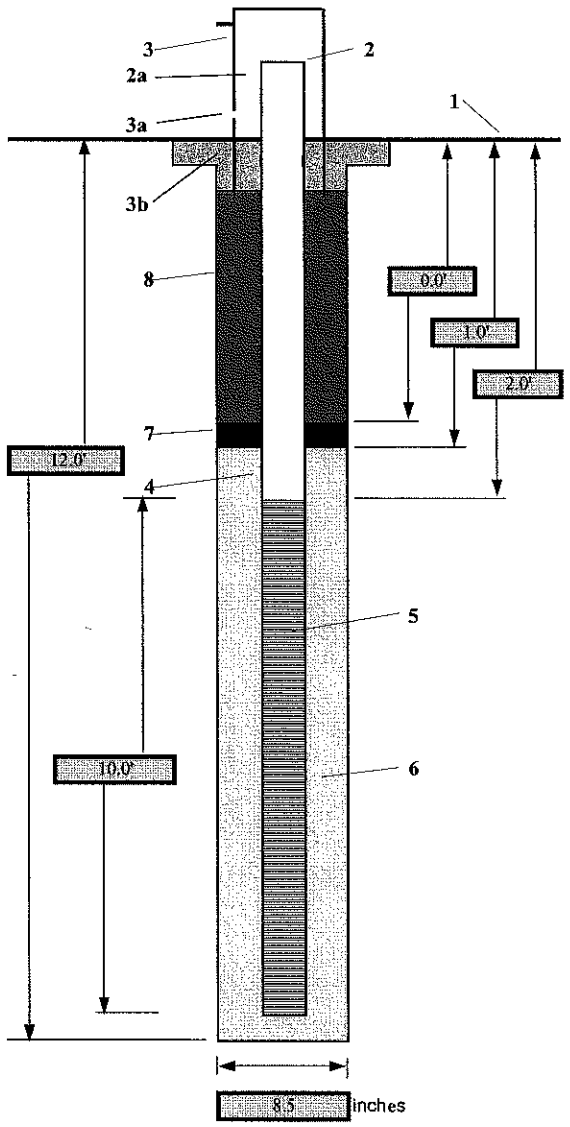

1- Ground elevation at well	605.90
2- Top of casing elevation	609.16
a) vent hole?	Yes
3- Wellhead protection cover type	Pro-Cover
a) drain tube?	No
b) concrete pad dimensions	2.5' x 2.5'
4- Well Casing	
a) Diameter (in)	2.0"
b) Material	PVC - Schedule 40
5- Type/slot size of screen	
a) Type	Machine Slotted
b) Screen Size	0.01
c) Screen Diameter (in)	2.0"
d) Material	PVC - Schedule 40
6- Type screen filter	#5 Sand Pack
a) Quantity used	
7- Type of seal	Bentonite Pellets
a) Quantity used	
b) Quantity estimated	
8- Grout	
a) Quantity used	
b) Quantity estimated	
b) Development method	Bailer
c) Development time	
9- Estimated development volume	
10- Comments	3" cap at base of screen (?)

Baker

PROJECT	WELL	
J-Pit Phase II Investigation	MW-8	SHEET 1 OF 1

WELL COMPLETION DIAGRAM

Project Number :	B252900000000	**Coordinates: Northing:**	2306442.80	**Easting:**	2862482.33		
Drilling Contractor:	Paramount Environmental	**Description:**					
Drilling Method and Equipment:	Hollow Stem Auger						
Driller:	Keith Kreiser / Ed Deluca	**Dates: Start :**	11/18/02	**End :**	11/08/02	**Logger :**	Rick Spitaler

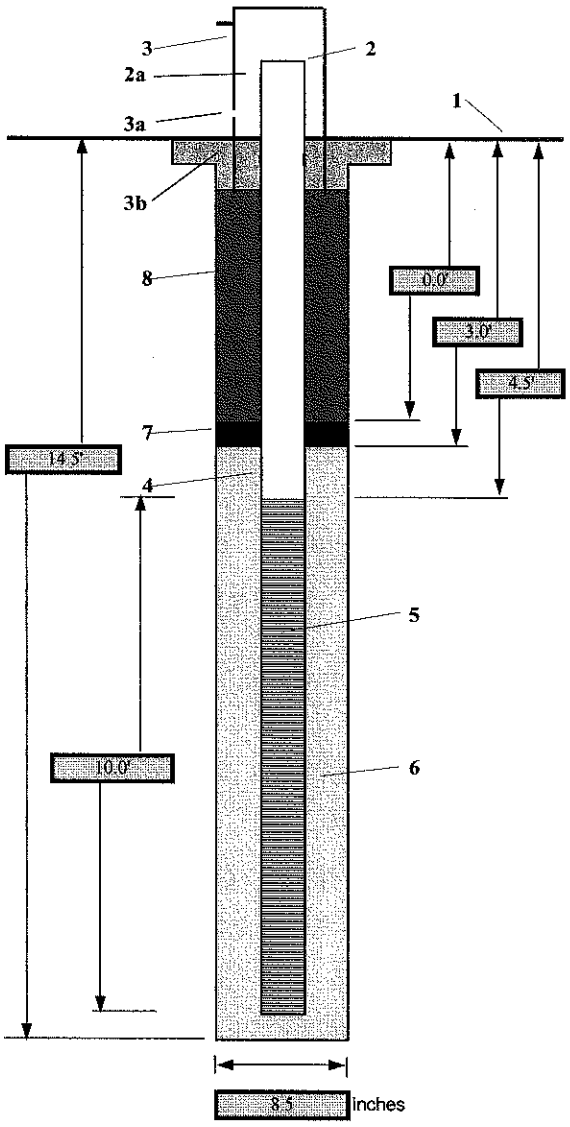

1- Ground elevation at well	607.10
2- Top of casing elevation	608.87
a) vent hole?	Yes
3- Wellhead protection cover type	Pro-Cover
a) drain tube?	No
b) concrete pad dimensions	2.5' x 2.5'
4- Well Casing	
a) Diameter (in)	2.0"
b) Material	PVC - Schedule 40
5- Type/slot size of screen	
a) Type	Machine Slotted
b) Screen Size	0.01
c) Screen Diameter (in)	2.0"
d) Material	PVC - Schedule 40
6- Type screen filter	#5 Sand Pack
a) Quantity used	
7- Type of seal	Bentonite Pellets
a) Quantity used	
b) Quantity estimated	
8- Grout	
a) Quantity used	
b) Quantity estimated	
b) Development method	Bailer
c) Development time	
9- Estimated development volume	
10- Comments	3" cap at base of screen (!-)

Baker

PROJECT	WELL	
J-Pit Phase II Investigation	MW-9	SHEET 1 OF 1

WELL COMPLETION DIAGRAM

Project Number :	B252900000000	**Coordinates: Northing:**	2306812.91	**Easting:**	2862246.52		
Drilling Contractor:	Paramount Environmental	**Description:**					
Drilling Method and Equipment:	Hollow Stem Auger						
Driller:	Keith Kreiser / Ed Deluca	**Dates: Start :**	11/18/02	**End :**	11/18/02	**Logger :**	Rick Spitaler

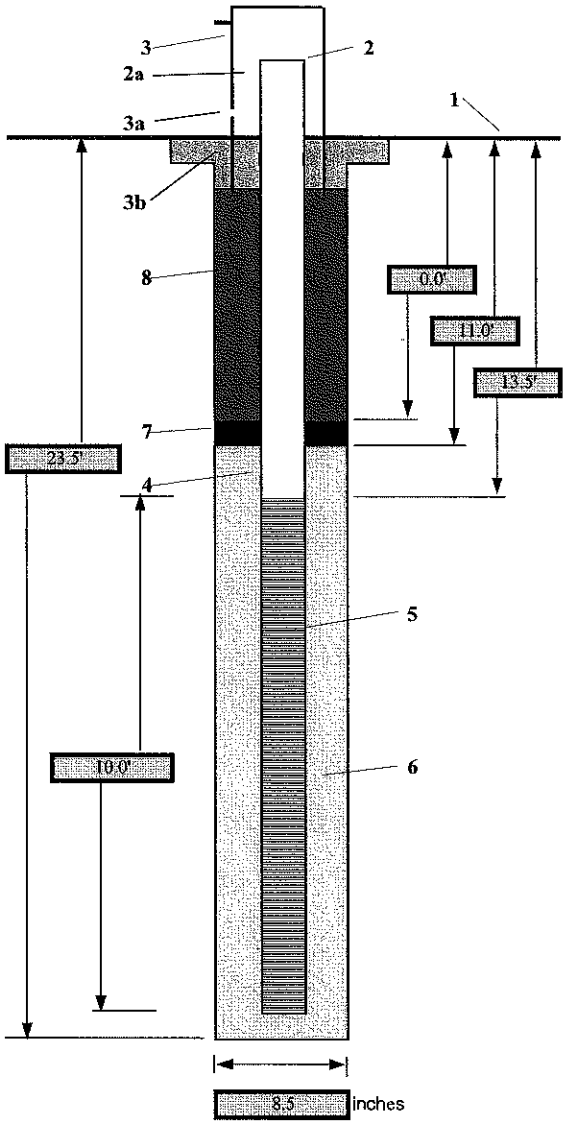

1- Ground elevation at well	609.30
2- Top of casing elevation	612.02
a) vent hole?	Yes
3- Wellhead protection cover type	Pro-Cover
a) drain tube?	No
b) concrete pad dimensions	2.5' x 2.5'
4- Well Casing	
a) Diameter (in)	2.0"
b) Material	PVC - Schedule 40
5- Type/slot size of screen	
a) Type	Machine Slotted
b) Screen Size	0.01
c) Screen Diameter (in)	2.0"
d) Material	PVC - Schedule 40
6- Type screen filter	#5 Sand Pack
a) Quantity used	
7- Type of seal	Bentonite Pellets
a) Quantity used	
b) Quantity estimated	
8- Grout	
a) Quantity used	
b) Quantity estimated	
b) Development method	Bailer
c) Development time	
9- Estimated development volume	
10- Comments	3" cap at base of screen (?)

Baker

PROJECT	WELL	
J-Pit Phase II Investigation	MW-10	SHEET 1 OF 1

WELL COMPLETION DIAGRAM

Project Number :	B252900000000	**Coordinates: Northing:**	2307544.68	**Easting:**	2859936.76		
Drilling Contractor:	Paramount Environmental	**Description:**					
Drilling Method and Equipment:	Hollow Stem Auger						
Driller:	Keith Kreiser / Ed Deluca	**Dates: Start :**	11/19/02	**End :**	11/19/02	**Logger :**	Rick Spitaler

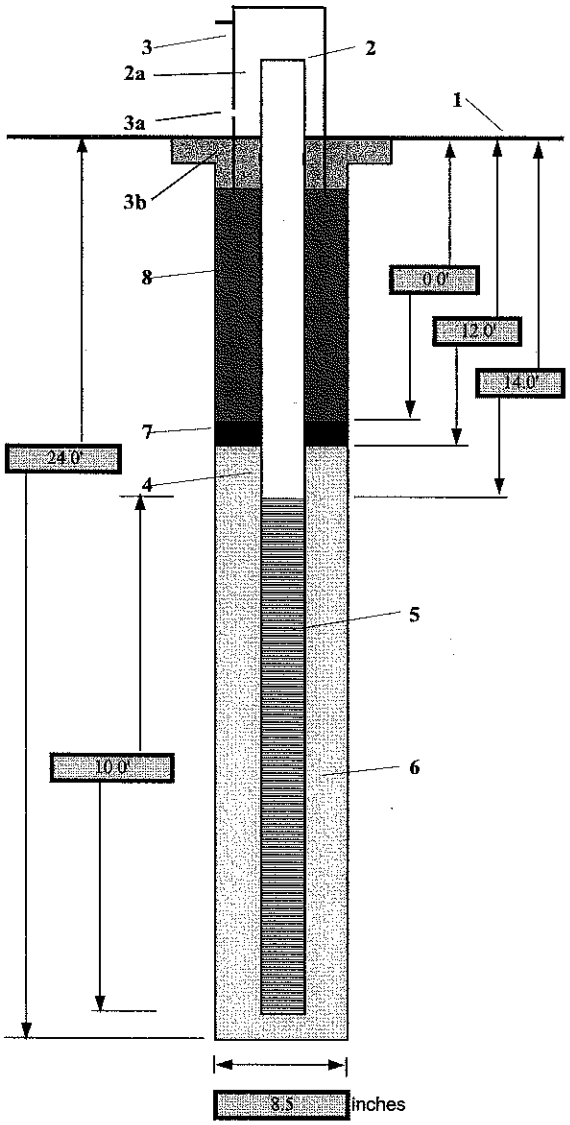

1- Ground elevation at well	610.10
2- Top of casing elevation	612.44
a) vent hole?	Yes
3- Wellhead protection cover type	Pro-Cover
a) drain tube?	No
b) concrete pad dimeosions	2.5' x 2.5'
4- Well Casing	
a) Diameter (in)	2.0"
b) Material	PVC - Schedule 40
5- Type/slot size of screen	
a) Type	Machine Slotted
b) Screen Size	0.01
c) Screen Diameter (in)	2.0"
d) Material	PVC - Schedule 40
6- Type screen filter	#5 Sand Pack
a) Quantity used	
7- Type of seal	Bentonite Pellets
a) Quantity used	
b) Quantity estimated	
8- Grout	
a) Quantity used	
b) Quantity estimated	
b) Development method	Bailer
c) Development time	
9- Estimated development volume	
10- Comments	3" cap at base of screen (-')

Baker

PROJECT	WELL	
J-Pit Phase II Investigation	MW-11	SHEET 1 OF 1

WELL COMPLETION DIAGRAM

Project Number :	B252900000000	**Coordinates: Northing:**	2306538.610	**Easting:**	2859919.950		
Drilling Contractor:	Paramount Environmental	**Description:**					
Drilling Method and Equipment:	Hollow Stem Auger						
Driller:	Keith Kreiser / Ed Deluca	**Dates: Start :**	11/19/02	**End :**	11/19/02	**Logger :**	Rick Spitaler

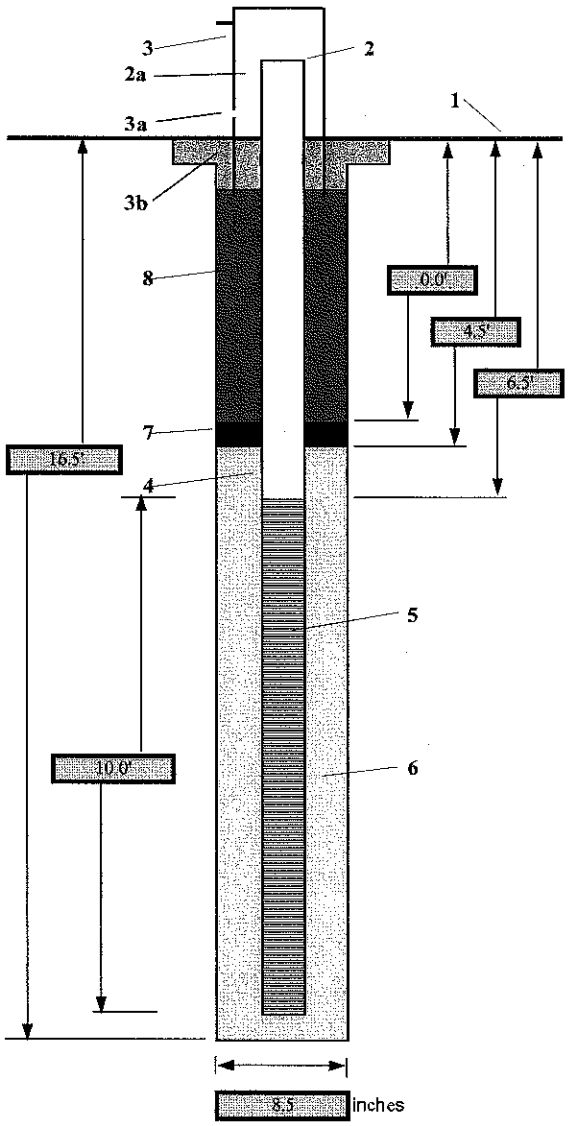

1- Ground elevation at well	607.60
2- Top of casing elevation	609.92
a) vent hole?	Yes
3- Wellhead protection cover type	Pro-Cover
a) drain tube?	No
b) concrete pad dimensions	2.5' x 2.5'
4- Well Casing	
a) Diameter (in)	2.0"
b) Material	PVC - Schedule 40
5- Type/slot size of screen	
a) Type	Machine Slotted
b) Screen Size	0.01
c) Screen Diameter (in)	2.0"
d) Material	PVC - Schedule 40
6- Type screen filter	#5 Sand Pack
a) Quantity used	
7- Type of seal	Bentonite Pellets
a) Quantity used	
b) Quantity estimated	
8- Grout	
a) Quantity used	
b) Quantity estimated	
b) Development method	Bailer
c) Development time	
9- Estimated development volume	
10- Comments	3" cap at base of screen ('-')

Baker

PROJECT	WELL	
J-Pit Phase II Investigation	MW-12	SHEET 1 OF 1

WELL COMPLETION DIAGRAM

Project Number :	B252900000000	**Coordinates: Northing:**	2306790.04	**Easting:**	2860614.53
Drilling Contractor:	Paramount Environmental	**Description:**			
Drilling Method and Equipment:	Hollow Stem Auger				
Driller:	Keith Kreiser / Ed Deluca	**Dates: Start :**	11/19/02	**End :**	11/19/02
Logger :	Rick Spitaler				

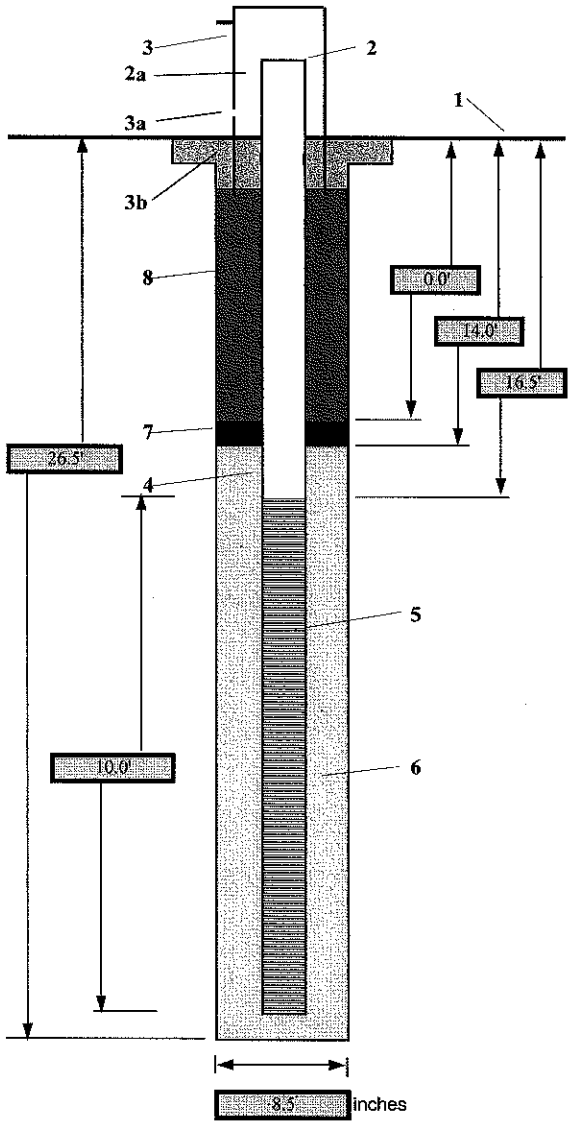

1- Ground elevation at well	611.30
2- Top of casing elevation	612.98
a) vent hole?	Yes
3- Wellhead protection cover type	Pro-Cover
a) drain tube?	No
b) concrete pad dimensions	2.5' x 2.5'
4- Well Casing	
a) Diameter (in)	2.0"
b) Material	PVC - Schedule 40
5- Type/slot size of screen	
a) Type	Machine Slotted
b) Screen Size	0.01
c) Screen Diameter (in)	2.0"
d) Material	PVC - Schedule 40
6- Type screen filter	#5 Sand Pack
a) Quantity used	
7- Type of seal	Bentonite Pellets
a) Quantity used	
b) Quantity estimated	
8- Grout	
a) Quantity used	
b) Quantity estimated	
b) Development method	Bailer
c) Development time	
9- Estimated development volume	
10- Comments	3" cap at base of screen (1")

Baker

PROJECT	WELL	
J-Pit Phase II Investigation	MW-13	SHEET 1 OF 1

WELL COMPLETION DIAGRAM

Project Number :	B252900000000	**Coordinates: Northing:**	2306280.56	**Easting:**	2861377.85		
Drilling Contractor:	Paramount Environmental	**Description:**					
Drilling Method and Equipment:	Hollow Stem Auger						
Driller:	Keith Kreiser / Ed Deluca	**Dates: Start :**	11/19/02	**End :**	11/19/02	**Logger :**	Rick Spitaler

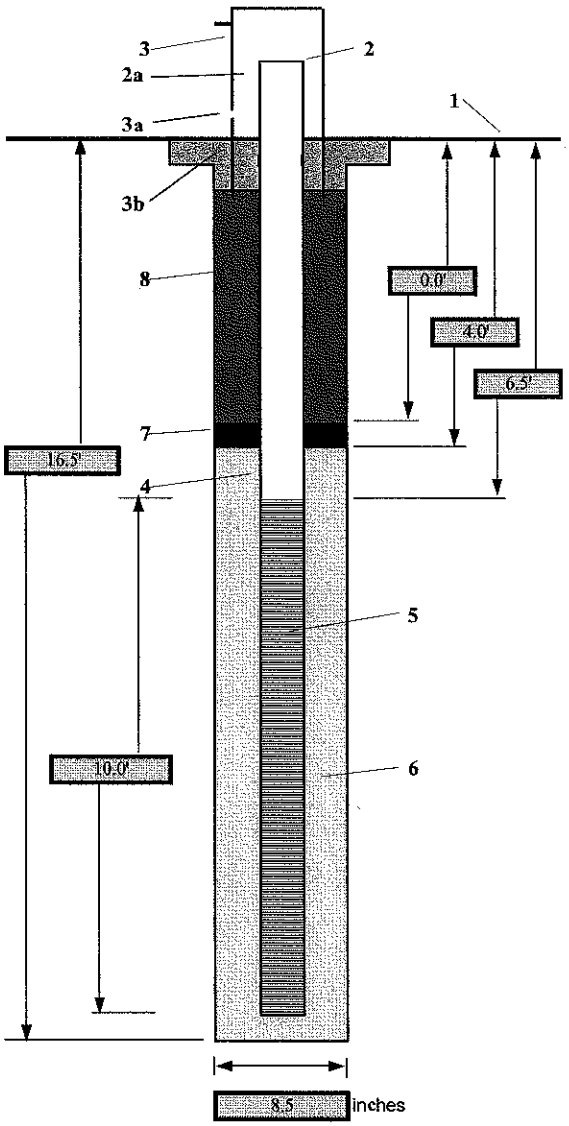

1- Ground elevation at well	606.10
2- Top of casing elevation	608.81
a) vent hole?	Yes
3- Wellhead protection cover type	Pro-Cover
a) drain tube?	No
b) concrete pad dimensions	2.5' x 2.5'
4- Well Casing	
a) Diameter (in)	2.0"
b) Material	PVC - Schedule 40
5- Type/slot size of screen	
a) Type	Machine Slotted
b) Screen Size	0.01
c) Screen Diameter (in)	2.0"
d) Material	PVC - Schedule 40
6- Type screen filter	#5 Sand Pack
a) Quantity used	
7- Type of seal	Bentonite Pellets
a) Quantity used	
b) Quantity estimated	
8- Grout	
a) Quantity used	
b) Quantity estimated	
b) Development method	Bailer
c) Development time	
9- Estimated development volume	
10- Comments	3" cap at base of screen (?)

Baker

PROJECT	WELL	
J-Pit Phase II Investigation	MW-14	SHEET 1 OF 1

WELL COMPLETION DIAGRAM

Project Number :	B252900000000	**Coordinates: Northing:**	2306242.17	**Easting:**	2861878.63
Drilling Contractor:	Paramount Environmental	**Description:**			
Drilling Method and Equipment:	Hollow Stem Auger				
Driller: Keith Kreiser / Ed Deluca	**Dates: Start :** 11/20/02	**End :** 11/20/02	**Logger :** Rick Spittler		

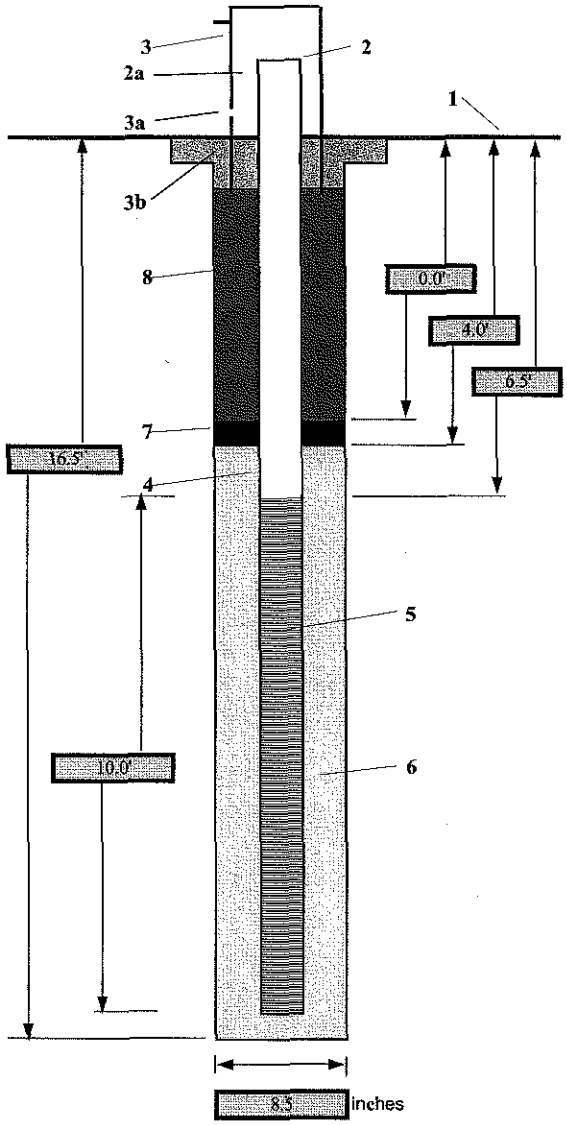

1- Ground elevation at well	607.20
2- Top of casing elevation	609.45
a) vent hole?	Yes
3- Wellhead protection cover type	Pro-Cover
a) drain tube?	No
b) concrete pad dimensions	2.5' x 2.5'
4- Well Casing	
a) Diameter (in)	2.0"
b) Material	PVC - Schedule 40
5- Type/slot size of screen	
a) Type	Machine Slotted
b) Screen Size	0.01
c) Screen Diameter (in)	2.0"
d) Material	PVC - Schedule 40
6- Type screen filter	#5 Sand Pack
a) Quantity used	
7- Type of seal	Bentonite Pellets
a) Quantity used	
b) Quantity estimated	
8- Grout	
a) Quantity used	
b) Quantity estimated	
b) Development method	Bailer
c) Development time	
9- Estimated development volume	
10- Comments	3" cap at base of screen (-)

Baker

PROJECT	WELL	
J-Pit Phase II Investigation	MW-15	SHEET 1 OF 1

WELL COMPLETION DIAGRAM

Project Number :	B252900000000	**Coordinates: Northing:**	2308771.47	**Easting:**	2859996.65		
Drilling Contractor:	Paramount Environmental	**Description:**					
Drilling Method and Equipment:	Hollow Stem Auger						
Driller:	Keith Kreiser / Ed Deluca	**Dates: Start :**	11/20/02	**End :**	11/20/02	**Logger :**	Rick Spitaler

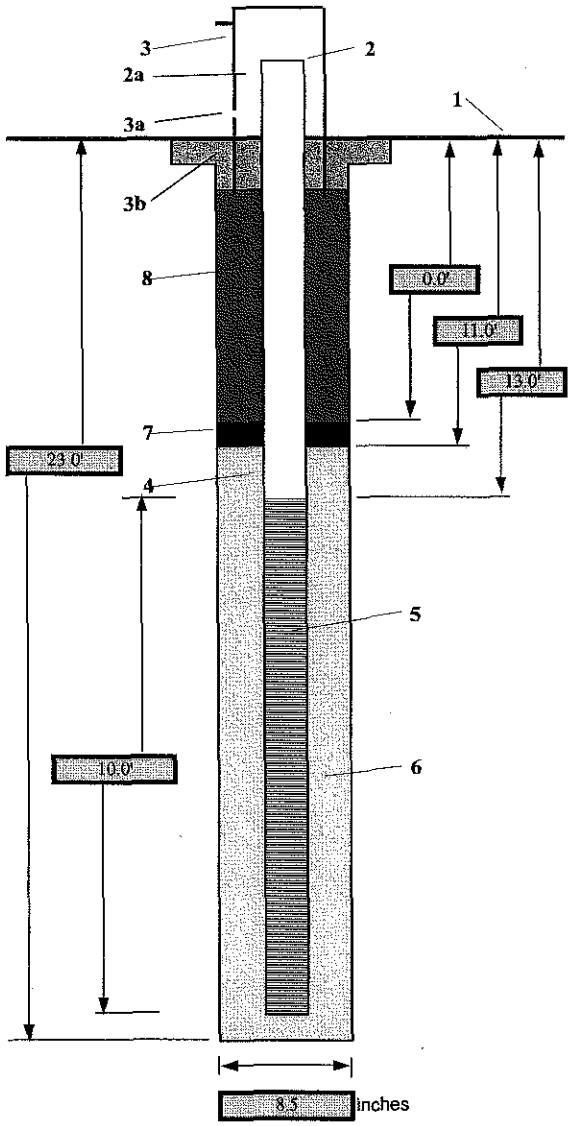

1- Ground elevation at well	607.50
2- Top of casing elevation	610.12
a) vent hole?	Yes
3- Wellhead protection cover type	Pro-Cover
a) drain tube?	No
b) concrete pad dimensions	2.5' x 2.5'
4- Well Casing	
a) Diameter (in)	2.0"
b) Material	PVC - Schedule 40
5- Type/slot size of screen	
a) Type	Machine Slotted
b) Screen Size	0.01
c) Screen Diameter (in)	2.0"
d) Material	PVC - Schedule 40
6- Type screen filter	#5 Sand Pack
a) Quantity used	
7- Type of seal	Bentonite Pellets
a) Quantity used	
b) Quantity estimated	
8- Grout	
a) Quantity used	
b) Quantity estimated	
b) Development method	Bailer
c) Development time	
9- Estimated development volume	
10- Comments	3" cap at base of screen (-)

Baker

PROJECT	WELL	
J-Pit Phase II Investigation	MW-16	SHEET 1 OF 1

WELL COMPLETION DIAGRAM

Project Number :	B252900000000	**Conrdinates: Northing:**	2305980.99	**Easting:**	2863797.15		
Drilling Contractor:	Paramount Environmental	**Description:**					
Drilling Method and Equipment:	Hollow Stem Auger						
Driller:	Keith Kreiser / Ed Deluca	**Dates: Start :**	11/21/02	**End :**	11/21/02	**Logger :**	Rick Spitaler

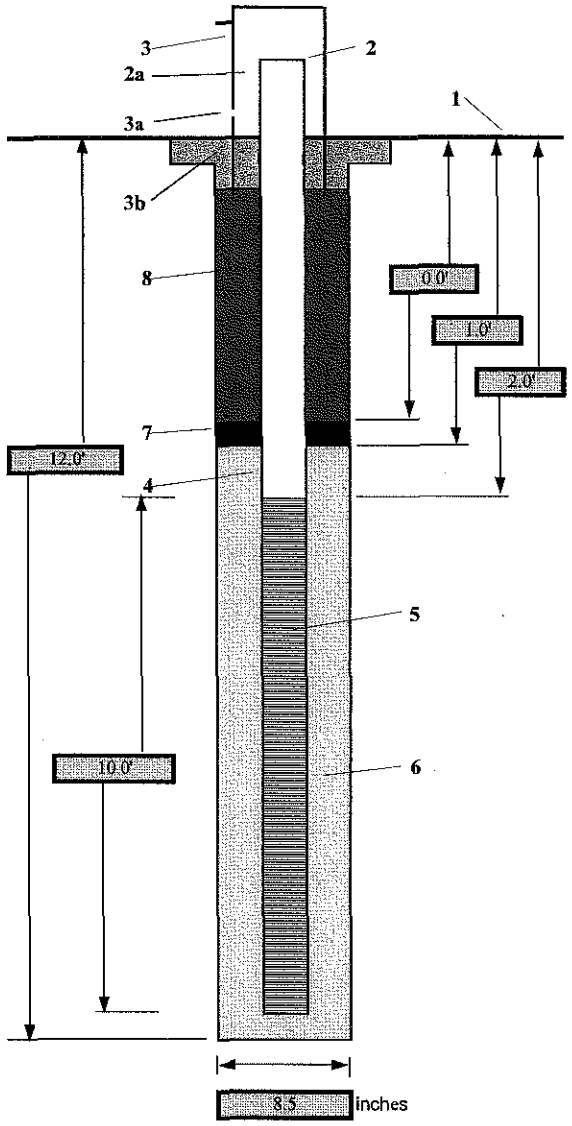

1- Ground elevation at well	606.60
2- Top of casing elevation	610.54
a) vent hole?	Yes
3- Wellhead protection cover type	Pro-Cover
a) drain tube?	No
b) concrete pad dimensions	2.5' x 2.5'
4- Well Casing	
a) Diameter (in)	2.0"
b) Material	PVC - Schedule 40
5- Type/slot size of screen	
a) Type	Machine Slotted
b) Screen Size	0.01
c) Screen Diameter (in)	2.0"
d) Material	PVC - Schedule 40
6- Type screen filter	#5 Sand Pack
a) Quantity used	
7- Type of seal	Bentonite Pellets
a) Quantity used	
b) Quantity estimated	
8- Grout	
a) Quantity used	
b) Quantity estimated	
b) Development method	Bailer
c) Development time	
9- Estimated development volume	
10- Comments	3" cap at base of screen (-')

Baker

PROJECT	WELL	
J-Pit Phase II Investigation	MW-17	SHEET 1 OF 1

WELL COMPLETION DIAGRAM

Project Number :	B252900000000	**Coordinates: Northing:**	2306655.79	**Easting:**	2863577.54		
Drilling Contractor:	Paramount Environmental	**Description:**					
Drilling Method and Equipment:	Hollow Stem Auger						
Driller:	Keith Kreiser / Ed Deluca	**Dates: Start :**	07/25/03	**End :**	07/25/03	**Logger :**	Rick Spitaler

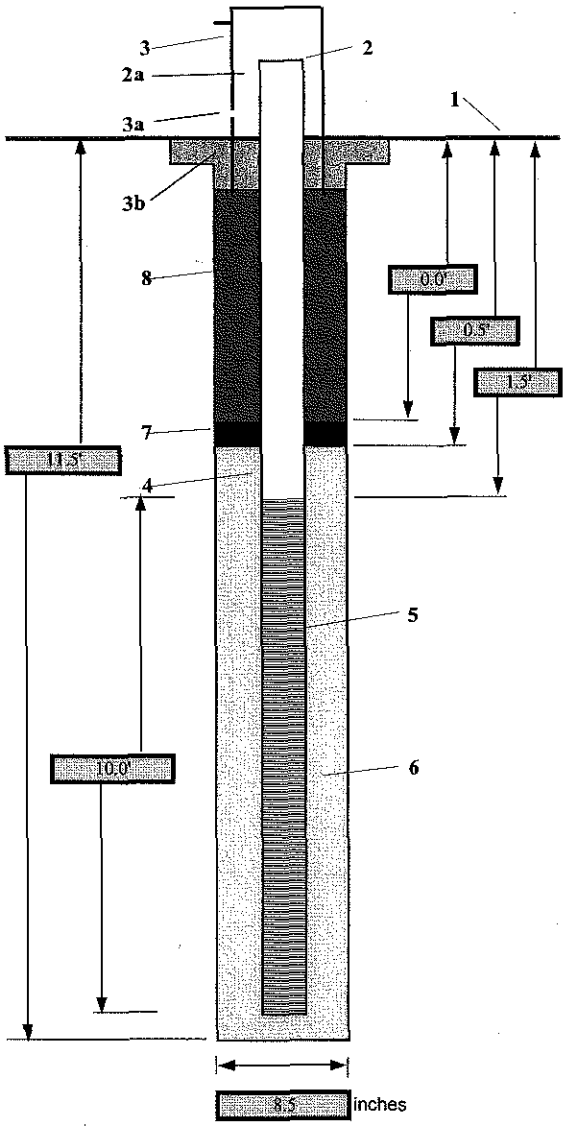

1- Ground elevation at well	608.10
2- Top of casing elevation	611.13
a) vent hole?	Yes
3- Wellhead protection cover type	Pro-Cover
a) drain tube?	No
b) concrete pad dimensions	2.5' x 2.5'
4- Well Casing	
a) Diameter (in)	2.0"
b) Material	PVC - Schedule 40
5- Type/slot size of screen	
a) Type	Machine Slotted
b) Screen Size	0.01
c) Screen Diameter (in)	2.0"
d) Material	PVC - Schedule 40
6- Type screen filter	#5 Sand Pack
a) Quantity used	
7- Type of seal	Bentonite Pellets
a) Quantity used	
b) Quantity estimated	
8- Grout	
a) Quantity used	
b) Quantity estimated	
b) Development method	Bailer
c) Development time	
9- Estimated development volume	
10- Comments	3" cap at base of screen (-')

Baker

PROJECT	WELL
J-Pit Phase II Investigation	

WELL COMPLETION DIAGRAM

Project Number :	B252900000000	**Coordinates: Northing:**	**Easting:**
Drilling Contractor:	Paramount Environmental	**Description:**	
Drilling Method and Equipment:	Hollow Stem Auger		
Driller:	**Dates: Start :**	**End :**	**Logger :**

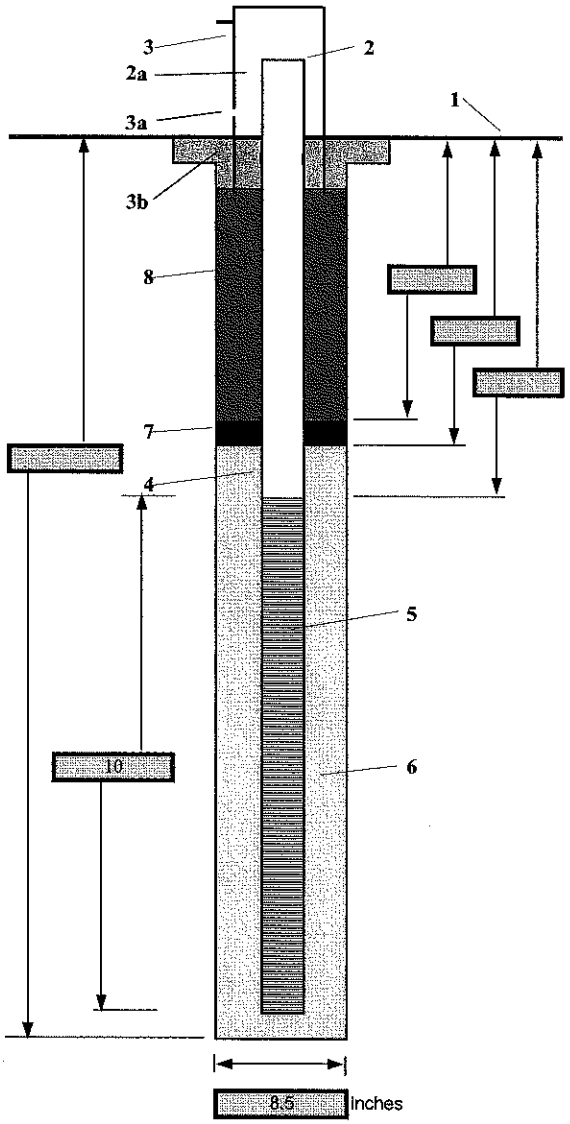

1- Ground elevation at well	
2- Top of casing elevation	
a) vent hole?	Y
3- Wellhead protection cover type	Pro-Cover
a) drain tube?	N
b) concrete pad dimensions	2.5'x2.5'
4- Well Casing	
a) Diameter (in)	2"
b) Material	PVC - Schedule 40
5- Type/slot size of screen	
a) Type	Machine Slotted
b) Screen Size	0.01
c) Screen Diameter (in)	2"
d) Material	PVC - Schedule 40
6- Type screen filter	#5 Sand Pack
a) Quantity used	
7- Type of seal	Bentonite Pellets
a) Quantity used	
b) Quantity estimated	
8- Grout	
a) Quantity used	
b) Quantity estimated	
b) Development method	Bailer
c) Development time	
9- Estimated development volume	

10- Comments 3" cap at base of screen (-')

APPENDIX B

Laboratory Reports

J-PIT
Appendix "B"
(Copy)

Phase II Site Investigation
J-PIT Redevelopment Site

Gary, Indiana

Prepared for
City of Gary
Department of Environmental Affairs

Appendix B Laboratory Results

Prepared by
Baker
Baker Environmental, Inc.
Crown Point, Indiana

APPENDIX C

MSDS and EPA Fact Sheets

U.S. Environmental Protection Agency

Ground Water & Drinking Water

Drinking Water and Health Basics
Frequently Asked Questions
Local Drinking Water Information
Drinking Water Standards
List of Contaminants & MCLs
Regulations & Guidance
Public Drinking Water Systems
Source Water Protection
Underground Injection Control
Data & Databases
Drinking Water Academy
Safe Drinking Water Act
National Drinking Water Advisory Council
Water Infrastructure Security
Drinking Water For Kids!

Technical Factsheet on: BENZENE

List of Contaminants

As part of the Drinking Water and Health pages, this fact sheet is part of a larger publication:
National Primary Drinking Water Regulations

Drinking Water Standards

MCLG: Zero
MCL: 0.005 mg/L
HAL: 1 to 10 day: 0.2 mg/L; Longer-term: 0.2 mg/L

Health Effects Summary

Acute: Acute exposure to high levels of benzene produces central nervous system (CNS) and death. At lower levels, above the MCL, mild CNS effects appear to be concentration dependent and rapidly reversible. Other effects include immune system depression and bone marrow toxicity leading to aplastic anemia.

Drinking water levels which are considered "safe" for short-term exposures: For a 10 kg (22 lb.) child consuming 1 liter of water per day: upto a ten-day exposure to 0.2 mg/L.

Chronic: Benzene has the potential to cause chromosomal aberrations in people who are chronically exposed at levels above the MCL.

Cancer: Benzene has the potential to cause cancer from a lifetime exposure at levels above the MCL.

Usage Patterns

Production of benzene in the USA in 1993 was over 12 billion lbs.

Used for printing & lithography, paint, rubber, dry cleaning, adhesives & coatings, detergents, extraction and rectification, preparation and use of inks in the graphic arts industries, as a thinner for paints and as a degreasing agent. In the tire industry and in shoe factories, benzene is used extensively.

Used primarily as a raw material in the synthesis of styrene (polystyrene plastics and synthetic rubber), phenol (phenolic resins), cyclohexane (nylon), aniline, maleic anhydride (polyester resins), alkylbenzenes (detergents), chlorobenzenes, and other products used in the production of drugs, dyes, insecticides, and plastics.

In future, coal will increasingly replace petroleum & natural gas as a source of hydrocarbons both for fuel & petrochemicals. Processes such as USA Steel Corporation's Clean Coke process, which yields 38% coke & 20% chemical by-products compared to 73% coke & 2% chemical by-products in conventional coking technology, should soon be used commercially. New coking, liquefaction, & gasification processes for coal are all potential sources of benzene.

Release Patterns

Benzene will enter the atmosphere primarily from fugitive emissions and exhaust connected with its use in gasoline. Another important source is emissions associated with its production and as an industrial intermediate. In addition, there are discharges into water from industrial effluents and losses during spills. Benzene is also released from its indirect production in coke ovens; from nonferrous metal manufacture, ore mining, wood processing, coal mining and textile manufacture. Although most public drinking water supplies are free of benzene or contain <0.3 ppb, exposure can be very high from consumption of contaminated sources drawn from wells contaminated by leaky gasoline storage tanks, landfills, etc.

From 1987 to 1993, according to the Toxics Release Inventory, releases of benzene to water totalled 583,210 lbs. Releases to land totalled 1,566,900 lbs. As indicated in the Table below, these releases were primarily from petroleum refining industries, with the greatest releases occuring in Texas and Alabama.

Environmental Fate

If benzene is released to soil, it will be subject to rapid volatilization near the surface and that which does not evaporate will be highly to very highly mobile in the soil and may leach to groundwater. It may be subject to biodegradation based on reported biodegradation of 24% and 47% of the initial 20 ppm benzene in a base-rich para-brownish soil in 1 and 10 weeks, respectively. It may be subject to biodegradation in shallow, aerobic groundwaters, but probably not under anaerobic conditions.

If benzene is released to water, it will be subject to rapid volatilization; the half-life for evaporation in a wind-wave tank with a moderate wind speed of 7.09 m/sec was 5.23 hrs; the estimated half-life for volatilization of benzene from a model river one meter deep flowing 1 m/sec with a wind velocity of 3 m/sec is estimated to be 2.7 hrs at 20 deg C. It will not be expected to significantly adsorb to sediment, bioconcentrate in aquatic organisms or hydrolyze.

It may be subject to biodegradation based on a reported biodegradation half-life of 16 days in an aerobic river die-away test. In a marine ecosystem biodegradation occurred in 2 days after an acclimation period of 2 days and 2 weeks in the summer and spring, respectively, whereas no degradation occurred in winter. According to one experiment, benzene has a half-life of 17 days due to photodegradation which could contribute to benzene's removal in situations of cold water, poor nutrients, or other conditions less conductive to microbial degradation.

If benzene is released to the atmosphere, it will exist predominantly in the vapor phase. Gas-phase benzene will not be subject to direct photolysis but it will react with photochemically produced hydroxyl radicals with a half-life of 13.4 days calculated using an experimental rate constant for the reaction. The reaction time in polluted atmospheres which contain nitrogen oxides or sulfur dioxide is accelerated with the half-life being reported as 4-6 hours. Products of photooxidation include phenol, nitrophenols, nitrobenzene, formic acid, and peroxyacetyl nitrate.

Benzene is fairly soluble in water and is removed from the atmosphere in rain. The primary routes of exposure are inhalation of contaminated air, especially in areas with high traffic, and in the vicinity of gasoline service stations and consumption of contaminated drinking water.

Chemical/Physical Properties

CAS Number: 71-43-2

Color/ Form/Odor: Clear, colorless aromatic liquid; highly flammable M.P.: 5.5 C B.P.: 80.1 C

Vapor Pressure: 100 mm Hg at 26.1 C

Octanol/Water Partition (Kow): Log Kow = 2.13

Density/Spec. Grav.: 0.8787 at 15 C

Solubilities: 1.8 g/L of water at 25 C; Slightly soluble in water;

Soil sorption coefficient: Koc estimated at 98; high to very high mobility in soil

Odor/Taste Thresholds: Taste threshold in water is 0.5 to 4.5 mg/L

Bioconcentration Factor: 3.5 to 4.4 in fish; not expected to bioconcentrate in aquatic organisms.

Henry's Law Coefficient: 0.0053 atm-cu m/mole;

Trade Names/Synonyms: Benzol 90, Pyrobenzol, Polystream, Coal naphtha, Phene

Other Regulatory Information

Monitoring:

--For Ground/Surface Water Sources:

Initial Frequency- 4 quarterly samples every 3 years

Repeat Frequency- Annually after 1 year of no detection

--Triggers - Return to Initial Freq. if detect at > 0.0005 mg/L

Analysis

Reference Source	Method Numbers
EPA 600/4-88-039	502.2; 524.2

Treatment/Best Available Technologies: Granular Activated Charcoal and Packed Tower Aeration

Toxic Release Inventory - Releases to Water and Land, 1987 to 1993 (in pounds):

	Water	Land
TOTALS	**564,546**	**1,539,385**
Top Six States*		
TX	1,436	1,135,994
AL	199,642	0
LA	137,599	4,347
CO	0	40,793
NM	0	38,199
IL	3	34,110
Major Industries*		
Petroleum refining	32,411	1,049,800
Primary Metal Ind.	133,339	18,078
Industrial chemicals	73,000	250,103
Alkalies, chlorine	122,240	0

* Water/Land totals only include facilities with releases greater than a certain amount - usually 1000 to 10,000 lbs.

For Additional Information

EPA can provide further regulatory or other general information:
EPA Safe Drinking Water Hotline - 800/426-4791

Other sources of toxicological and environmental fate data include:
Toxic Substance Control Act Information Line - 202/554-1404
Toxics Release Inventory, National Library of Medicine - 301/496-6531
Agency for Toxic Substances and Disease Registry - 404/639-6000

RETURN TO MTBE in NJ

TABLE OF CONTENTS

PROGRAM REQUIREMENTS	HEALTH EFFECTS	REGULATION & GUIDANCE
PERMIT LIMITS & MONITORING REQUIREMENTS	OCCURRENCE OF MTBE IN AIR & WATER	CONCLUSION & RECOMMENDATIONS
REFERENCES		

FATE AND TRANSPORT

1. Potential for transport in groundwater

MTBE has higher water solubility, exhibits lower adsorption to soil, and is more resistant to chemical degradation than the other common groundwater contaminants from gasoline - benzene, toluene, ethylbenzene, and xylene (BTEX compounds). Its water solubility of about 50 g/L makes it about 25 times more soluble than benzene, the most soluble of the BTEX constituents (Squillace et. al, 1997). This implies that MTBE should be more readily leached to groundwater, and transported more quickly and further in groundwater, than the BTEX compounds. Its adsorption to soil is so low that it should transport nearly as rapidly as the groundwater itself. This behavior has been observed in aquifers (Squillace et al., 1997). For this reason, MTBE has been used as an indicator compound to determine if a plume of gasoline-contaminated groundwater is approaching a groundwater monitoring location. How much more quickly and how much further MTBE travels relative to other gasoline compounds is under some debate, however. Benzene, while having a lower soil adsorption coefficient than MTBE, nonetheless exhibits minimal adsorption to soil and is quite mobile. A recent report from Lawrence Livermore laboratories (Happel et al., 1998) indicated that measured MTBE plumes for several case studies were no more extensive than benzene plumes. However, the investigators also stated that the measured benzene plumes quite possibly resulted from earlier spills than those responsible for the MTBE plumes, and that they believed that the MTBE plumes would grow over time relative to the benzene plumes. This hypothesis is further supported by the fact that MTBE is more resistant to degradation than benzene, which would tend to allow its transport for longer distances prior to being attenuated via degradation.

2. Potential contribution of atmospheric MTBE to groundwater

Much of the interest in possible MTBE washout from the atmosphere to groundwater stems from recent publications by the U.S. Geological Survey (Pankow et al., 1997; Baehr et al., 1999a). The papers discuss levels of MTBE found in shallow groundwater, and possible sources for the observed levels. Possible sources discussed were leaking storage tanks,

stormwater runoff, and precipitation.

The possibility for MTBE deposition onto the soil surface and its subsequent leaching to groundwater stems from the low Henry's law constant for this chemical. The Henry's law constant determines the tendency of a chemical to transfer from air to water or vice versa. The Henry's law constant for MTBE is low relative to the BTEX compounds (about 14 times lower than that of benzene), which signifies that it has a greater tendency to wash out of the atmosphere in precipitation and to leach to groundwater than do the BTEX compounds.

Direct experimental measurements of MTBE deposition have not been conducted, because such experiments are difficult to conduct with volatile organic chemicals. However, theoretical calculations have been made to estimate maximum MTBE concentrations in shallow groundwater resulting from washout and leaching of measured air levels of MTBE in New Jersey. It was determined that maximum concentrations of MTBE that might occur in shallow groundwater as a result of atmospheric deposition would be approximately 1 ug/L. Since many groundwater samples collected both in New Jersey and other parts of the United States have been observed to contain MTBE in sub-ug/L levels, the possibility of some of these observations being due to atmospheric washout cannot be eliminated, at least in the case of shallow groundwater samples. Concentrations higher than 1 ug/L in groundwater apparently result from local spillage or leaking of underground storage tanks, rather than atmospheric deposition.

3. <u>Potential for accumulation in lakes</u>

Data pertaining to MTBE fate and transport in lakes has recently become available, and include studies on lakes in New Jersey and California (See Occurrence section below for data on MTBE in New Jersey lakes). The University of California, Davis, is conducting the largest-scale studies on this topic at the present time. In their study at Donner Lake, CA, motorized watercraft were identified as the principle source of MTBE contamination (Reuter et al., 1998). Personal watercraft (jetskis) and many other motorized watercraft use 2-stroke engines, which run on a oil/gasoline mixture. As much as 30% of this fuel is discharged directly into the waterbody.

Two factors may account for the buildup of MTBE in lakes during the boating season. First, MTBE is present in gasoline as a higher percentage than the BTEX compounds. Additionally, BTEX chemicals have much higher Henry's law constants than MTBE; these compounds volatilize fairly rapidly from the water body while MTBE has a much greater tendency to remain in the water. The time resolution of the Donner Lake study was such that a spike in MTBE levels was observed over the July 4th weekend of 1997. MTBE levels as high as 12 ug/Lin the lake

were measured just after this holiday. Also observed was the dissipation of MTBE after the boating season. Although volatilization of MTBE is slow, it was adequate to remove measurable MTBE from the lake prior to the next boating season. Thus, no carryover from the prior year was observed. UC Davis, along with the U.S. Geological Survey, is conducting research on a much larger lake, Lake Tahoe, CA (USGS, 1998). Significant near shore levels of MTBE up to 4.2 ug/L have been measured, presumably due to boating activity. In deeper waters of the lake, MTBE has not been observed, apparently due to dilution of MTBE into the very large volume of this lake. Other lakes in the vicinity without watercraft activity were also sampled and no measurable MTBE was found.

Information on MTBE occurrence in New Jersey lakes is presented later in this report.

4. Degradation of MTBE

Atmosphere - Like many gasoline components, MTBE degrades rather rapidly in the atmosphere. The primary degradation product is tertiary-butyl formate. Half-lives of MTBE in the atmosphere can be as short as 3 days. The primary reactant in the atmosphere responsible for the degradation is the hydroxyl radical. In urban areas, degradation may be lower due to lower concentrations of the hydroxyl radical being present. Nonetheless, MTBE is not thought to persist, and measured concentrations result from a steady-state between vehicular emissions and degradation in the atmosphere.

Soil and groundwater - Research into MTBE degradation in soil and groundwater is under extensive investigation at the present time. Evidence to date indicates that MTBE degrades much slower than the BTEX compounds, and, therefore, may travel further and persist longer in groundwater plumes. The primary reaction product is tertiary-butyl alcohol, which is another constituent of gasoline commonly found in conjunction with MTBE. The ultimate degradation products have been confirmed to be carbon dioxide and water.

While natural field degradation of MTBE by microorganisms is rather slow, it is measurable, and particular species have recently been identified that are able to utilize MTBE as a sole-carbon source. Recent research in bioremediation of MTBE implies that degradation can be greatly accelerated by inoculating water or soil with MTBE-acclimated microorganisms. Thus, while natural degradation of MTBE may be slow, there is a good potential for using enhanced biodegradation as a remediation technique. Spontaneous development of higher degradation rates has also been observed in one California wastewater treatment plant. Factors controlling the rate of biodegradation of MTBE appear to be site-specific, and are not well understood at this time.

Drinking Water and Health Basics
Frequently Asked Questions
Local Drinking Water Information
Drinking Water Standards
List of Contaminants & MCLs
Regulations & Guidance
Public Drinking Water Systems
Source Water Protection
Underground Injection Control
Data & Databases
Drinking Water Academy
Safe Drinking Water Act
National Drinking Water Advisory Council
Water Infrastructure Security
Drinking Water For Kids!

Consumer Factsheet on: TRICHLOROETHYLENE

List of Contaminants

As part of the Drinking Water and Health pages, this fact sheet is part of a larger publication:
National Primary Drinking Water Regulations

This is a factsheet about a chemical that may be found in some public or private drinking water supplies. It may cause health problems if found in amounts greater than the health standard set by the United States Environmental Protection Agency (EPA).

What is Trichloroethylene and how is it used?

Trichloroethylene is a colorless or blue organic liquid with a chloroform-like odor. The greatest use of trichloroethylene is to remove grease from fabricated metal parts and some textiles.

The list of trade names given below may help you find out whether you are using this chemical at home or work.

Trade Names and Synonyms:

1,1,2-Trichloroethylene
Acetylene trichloroethylene
Algylen
Anameth
Benzinol
Chlorilen
CirCosolv
Germalgene
Lethurin
Perm-a-chlor
Petzinol
Philex
TRI-Plus M
Vitran

Why is Trichloroethylene being Regulated?

In 1974, Congress passed the Safe Drinking Water Act. This law requires EPA to determine safe levels of chemicals in drinking water which do or may cause health problems. These non-enforceable levels, based solely on possible health risks and exposure, are called Maximum Contaminant Level Goals.

The MCLG for trichloroethylene has been set at zero because EPA believes this level of protection would not cause any of the potential health problems described below.

Based on this MCLG, EPA has set an enforceable standard called a Maximum Contaminant Level (MCL). MCLs are set as close to the MCLGs as possible, considering the ability of public water systems to detect and remove contaminants using suitable treatment technologies.

The MCL has been set at 5 parts per billion (ppb) because EPA believes, given present technology and resources, this is the lowest level to which water systems can reasonably be required to remove this contaminant should it occur in drinking water.

These drinking water standards and the regulations for ensuring these standards are met, are called National Primary Drinking Water Regulations. All public water supplies must abide by these regulations.

What are the Health Effects?

Some people who drink water containing trichloroethylene in excess of the MCL over many years could experience problems with their liver and may have an increased risk of getting cancer.

How much Trichloroethylene is produced and released to the environment?

Production of trichloroethylene has increased from just over 260,000 lbs. in 1981 to 320 million lbs. in 1991. Major environmental releases of trichloroethylene are due to air emissions from metal degreasing plants. Wastewater from metal finishing, paint and ink formulation, electrical/electronic components, and rubber processing industries also may contain trichloroethylene.

From 1987 to 1993, according to the Toxics Release Inventory, trichloroethylene releases to water and land totalled over 291,000 lbs. These releases were primarily from steel pipe and tube manufacturing industries. The largest releases occurred in Pennsylvania and Illinois. The largest direct releases to water occurred in West Virginia.

What happens to Trichloroethylene when it is released to the environment?

Trichloroethylene released to soil will either evaporate or leach into ground water. If released to water, it will also quickly evaporate. It has only a moderate potential to accumulate in aquatic life.

How will Trichloroethylene be Detected in and Removed from My Drinking Water?

The regulation for trichloroethylene became effective in 1989. Between 1993 and 1995, EPA required your water supplier to collect water samples every 3 months for one year and analyze them to find out if TCE is present above 0.5 ppb. If it is present above this level, the system must continue to monitor this contaminant until the system has taken immediate steps to remediate the problem or the State has determined that the contaminant will remain reliably and consistently below the MCL.

If contaminant levels are found to be consistently above the MCL, your water supplier must take steps to reduce the amount of TCE so that it is consistently below that level. The following treatment methods have been approved by EPA for removing TCE: Granular activated carbon in combination with Packed Tower Aeration.

How will I know if Trichloroethylene is in my drinking water?

If the levels of trichloroethylene exceed the MCL, 5 ppb, the system must notify the public via newspapers, radio, TV and other means. Additional actions, such as providing alternative drinking water supplies, may be required to prevent serious risks to public health.

Drinking Water Standards:

Mclg: zero

Mcl: 5 ppb

Trichloroethylene Releases to Water and Land, 1987 to 1993 (in pounds):

		Water	Land
TOTALS (in pounds)		**100,293**	**191,088**
Top Six States*			
PA	0	33,450	
IL	0	30,711	
GA	3,742	17,532	
TX	0	21,000	
MA	0	19,920	
WV	12,822	0	
Major Industries			
Steel pipe, tubes		31	39,288
Misc. Indust. Organics		27,708	0
Car parts, access.		4,405	19,920
Plating, polishing		3,342	20,100
Wool fabric mills		3,942	18,081

* State totals only include facilities with releases greater than 10,000 lbs.

Learn more about your drinking water!

EPA strongly encourages people to learn more about their drinking water, and to support local efforts to protect and upgrade the supply of safe drinking water. Your water bill or telephone books government listings are a good starting point.

Your local water supplier can give you a list of the chemicals they test for in your water, as well as how your water is treated.

Your state Department of Health/Environment is also a valuable source of information.

For help in locating these agencies or for information on drinking water in general, call: EPAs Safe Drinking Water Hotline: (800) 426-4791.

For additional information on the uses and releases of chemicals in your state, contact the: Community Right-to-Know Hotline: (800) 535-0202.

List of Contaminants

Safewater Home | About Our Office | Publications | Calendar | Links | Office of Water | En Español

EPA Home | Privacy and Security Notice | Contact Us

Last updated on Thursday, March 6th, 2003
URL: http://www.epa.gov/safewater/contaminants/dw_contamfs/trichlor.html

U.S. Environmental Protection Agency

Ground Water & Drinking Water

Drinking Water and Health Basics
Frequently Asked Questions
Local Drinking Water Information
Drinking Water Standards
List of Contaminants & MCLs
Regulations & Guidance
Public Drinking Water Systems
Source Water Protection
Underground Injection Control
Data & Databases
Drinking Water Academy
Safe Drinking Water Act
National Drinking Water Advisory Council
Water Infrastructure Security

Technical Factsheet on: POLYCYCLIC AROMATIC HYDROCARBONS (PAHs)

List of Contaminants

As part of the Drinking Water and Health pages, this fact sheet is part of a larger publication:
National Primary Drinking Water Regulations

Drinking Water Standards
MCLG: zero mg/L
Mcl: 0.0002 mg/L
HAL(child): none

Health Effects Summary

Acute: EPA has found polycyclic aromatic hydrocarbons (PAHs) similar to benzo(a)pyrene to potentially cause the following health effects from acute exposures at levels above the MCL: red blood cell damage, leading to anemia; suppressed immune system.

Drinking water levels which are considered "safe" for short-term exposures have not been established at this time.

Chronic: Benzo(a)pyrene has the potential to cause the following health effects from long-term exposures at levels above the MCL: developmental and reproductive effects.

Cancer: There is some evidence that benzo(a)pyrene has the potential to cause cancer from a lifetime exposure at levels above the MCL.

Usage Patterns

Benzo(a)pyrene is one of a group of compounds called polycyclic aromatic hydrocarbons (PAHs), or polynuclear aromatic hydrocarbons (PNAs). They are not produced or used commercially but are ubiquitous in that they are formed as a result of incomplete combustion of organic materials.

Release Patterns

PAHs are found in exhaust from motor vehicles and other gasoline and diesel engines, emission from coal-, oil-, and wood-burning stoves and furnaces, cigarette smoke; general soot and smoke of industrial, municipal, and domestic origin, and cooked foods, especially charcoal-broiled; in incinerators, coke ovens, and asphalt processing and use.

There are two major sources of PAHs in drinking water: 1) contamination of raw water supplies from natural and man-made sources, and 2) leachate from coal tar and asphalt linings in water storage tanks and distribution lines. PAHs in raw water will tend to adsorb to any particulate matter and be removed by filtration before reaching the tap.

PAHs in tap water will mainly be due to the presence of PAH-containing materials in water storage and distribution systems. Though few data are available for estimating the potential for PAH release to water from these materials, there are reports that levels can reach 0.01 mg/L with optimum leaching conditions.

Environmental Fate

Released benzo(a)pyrene is largely associated with particulate matter, soils, and sediments. Although environmental concentrations are highest near sources, its presence in places distant from primary sources indicates that it is reasonably stable in the atmosphere and capable of long distance transport.

When released to air it may be subject to direct photolysis, although adsorption to particulates apparently can retard this process. It may also be removed by reaction with ozone (half-life 37 min) and NO2 (half-life 7 days), and an estimated half-life for reaction with photochemically produced hydroxyl radicals is 21.49 hr.

If released to water, it will be expected to adsorb very strongly to sediments and particulate matter. It will not hydrolyze. It has been shown to be susceptible to significant metabolism by microorganisms in some natural waters without use as carbon or energy source, but in most waters and in sediments it is stable towards biodegradation. BaP will be expected to undergo significant photodegradation near the surface of waters. Evaporation may be significant with a predicted half-life of 43 days. However, adsorption to sediments and particulates may significantly retard biodegradation, photodegradation, and evaporation.

If released to soil it will be expected to adsorb very strongly and will not be expected to leach to the groundwater. However, its presence in some groundwater samples indicates that it can be transported there by some mechanism. It will not hydrolyze, and evaporation from soils and surfaces is not expected to be significant. Biodegradation tests in soils have resulted in a wide range of reported half-lives: 2 days to 1.9 yr. Based on these values and the apparent lack of a significant competing fate process, biodegradation may be an important process in soils.

Benzo(a)pyrene is expected to bioconcentrate in aquatic organisms that can not metabolize it. Reported BCFs include: Oysters, 3000; Rainbow trout, 920; Bluegills, 2,657; zooplankton, 1000 to 13,000. The presence of humic acid in solution has been shown to decrease bioconcentration. Those organisms which lack a metabolic detoxification enzyme system, tend to accumulate polycyclic aromatic hydrocarbons. For example, BCFs have been found to be very low (<1) for mudsuckers, sculpins and sand dabs.

Human exposure will be from inhalation of contaminated air and consumption of contaminated food and water. Especially high exposure will occur through the smoking of cigarettes and the ingestion of certain foods (eg smoked and charcoal broiled meats and fish).

Chemical/ Physical Properties

CAS Number: 50-32-8

Color/ Form/Odor: Pale yellow needlelike crystals, faintly aromatic

M.P.: 179-179.3 C B.P.: >360 C

Vapor Pressure: >1 mm Hg at 20 C

Density/Spec. Grav.: 1.35 at 15 C

Octanol/Water Partition (Kow): Log Kow = 6.04

Solubility: 0.0038 mg/L of water at 25 C; very low solubility in water

Soil sorption coefficient: Log Koc =6.6 to 6.8; very low mobility in soil

Odor/Taste Thresholds: N/A

Bioconcentration Factor: BCFs range from <1 to 2675 in fish; expected to bioconcentrate in

aquatic organisms which are unable to metabolize it.

Henry's Law Coefficient: N/A; volatilization not significant

Trade Names/Synonyms: 3,4-Benz(a)pyrene; BaP; BP

Other Regulatory Information

Monitoring For Ground/Surface Water Sources:

Initial Frequency- 4 quarterly samples every 3 years
Repeat Frequency- If no detections during initial round:
2 quarterly per year if serving >3300 persons;
1 sample per 3 years for smaller systems
Triggers - Return to Initial Freq. if detect at > 0.00002 mg/L

Analysis:

Reference Source	Method Numbers
EPA 600/4-88-039	525.1; 550; 550.1

Treatment- Best Available Technologies:
Granular Activated Charcoal

For Additional Information:

EPA can provide further regulatory and other general information:
EPA Safe Drinking Water Hotline - 800/426-4791

Other sources of toxicological and environmental fate data include:
Toxic Substance Control Act Information Line - 202/554-1404
Toxics Release Inventory, National Library of Medicine - 301/496-6531
Agency for Toxic Substances and Disease Registry - 404/639-6000

List of Contaminants

Safewater Home | About Our Office | Publications | Calendar | Links | Office of Water | En Español

EPA Home | Privacy and Security Notice | Contact Us

Last updated on Tuesday, November 26th, 2002
URL: http://www.epa.gov/OGWDW/dwh/t-soc/pahs.html

U.S. Environmental Protection Agency

Ground Water & Drinking Water

Technical Fact Sheet: Final Rule for Arsenic in Drinking Water

EPA 815-F-00-016
January 2001

- Arsenic in drinking water rule (66 FR 6976 / January 22, 2001) (read online) ~ (PDF file)
- NEW EPA is reviewing the new arsenic in drinking water standard. EPA will work with the National Academy of Sciences and the National Drinking Water Advisory Council to reassess the scientific and cost issues associated with the rule.

1. What are we announcing?

Today's final rule revises the current Maximum Contaminant Level (MCL) from 50 µg/L to 10 µg/L and sets a Maximum Contaminant Level Goal (MCLG) of zero for arsenic in drinking water. In addition, this final rule also clarifies how compliance is demonstrated for many inorganic and organic contaminants in drinking water.

2. What are the requirements of this final rule?

Both community water systems (CWSs) and non-transient, non-community water systems (NTNCWSs) will be required to reduce the arsenic concentration in their drinking water systems to 10 µg/L. A CWS is a public water system that serves at least 15 locations or 25 residents regularly year round (e.g., most cities and towns, apartments, and mobile home parks with their own water supplies). An NTNCWS is a public water system that is not a CWS and serves at least 25 of the same people more than 6 months of the year (e.g., schools, churches, nursing homes, and factories).

This final rule is also a vehicle for clarifying two compliance requirements for inorganic contaminants (IOCs), volatile organic contaminants (VOCs), and synthetic organic contaminants (SOCs). When a system fails to collect the required number of samples, compliance averages will be based on the actual number of samples collected. Also, new public water systems and systems using new sources of water must demonstrate compliance within State-specified time and sampling frequencies.

3. How soon after publishing the final rule will the changes take effect?

All CWSs and all NTNCWSs that exceed the MCL of 10 µg/L will be required to come into compliance 5 years after the publication of the final rule. Beginning with reports that are due by July 1, 2002, all CWSs will begin providing health information and arsenic concentrations in their annual consumer confidence report (CCR) for water that exceeds ½ the new MCL.

4. Why is this rule significant?

In the 1996 amendments to the Safe Drinking Water Act (SDWA), Congress directed EPA to propose a new arsenic regulation by January 1, 2000 and to issue the final rule by January 1, 2001 (Congress subsequently extended the final rule date to June 22, 2001). EPA published the

proposed rule for arsenic on June 22, 2000. The rule proposed an MCL of 5 µg/L for arsenic and EPA took comment on regulatory options of 3 µg/L (the feasible level), 10 µg/L and 20 µg/L. The 1996 amendments to SDWA added discretionary authority for the EPA Administrator to adjust the maximum contaminant level (MCL) if the benefits would not justify the costs (§1412(b)(6)). Today's rule is important because it is the second drinking water regulation in which EPA will use the discretionary authority under §1412(b)(6) of SWDA. After careful consideration of the benefits and the costs, EPA has decided to set the drinking water standard for arsenic higher than the technically feasible level of 3 µg/L because EPA believes that the costs would not justify the benefits at this level. EPA believes that the final MCL of 10 µg/L maximizes health risk reduction at a cost justified by the benefits.

5. What health effects are associated with exposure to arsenic from drinking water?

In most drinking water sources, the inorganic form of arsenic tends to be more predominant than organic forms. Inorganic arsenic in drinking water can exert toxic effects after acute (short-term) or chronic (long-term) exposure. Although acute exposures to high doses of inorganic arsenic can cause adverse effects, such exposures do not occur from public water systems in the U.S. that are in compliance with the existing MCL of 50 µg/L. Today's final rule addresses the long-term, chronic effects of exposure to low concentrations of inorganic arsenic in drinking water. Studies link inorganic arsenic ingestion to a number of health effects. These health effects include:

- *Cancerous Effects:* skin, bladder, lung, kidney, nasal passages, liver and prostate cancer; and
- *Non-cancerous effects:* cardiovascular, pulmonary, immunological, neurological and endocrine (*e.g.*, diabetes) effects.

6. What are the sources of arsenic contamination in water?

The contamination of a drinking water source by arsenic can result from either natural or human activities. Arsenic is an element that occurs naturally in rocks and soil, water, air, plants, and animals. Volcanic activity, the erosion of rocks and minerals, and forest fires are natural sources that can release arsenic into the environment. Although about 90 percent of the arsenic used by industry in the United States is currently used for wood preservative purposes, arsenic is also used in paints, drugs, dyes, soaps, metals and semi-conductors. Agricultural applications, mining, and smelting also contribute to arsenic releases.

7. How many people and how many systems will be affected by this rule?

Higher levels of arsenic tend to be found more in ground water sources than in surface water sources (*i.e.*, lakes and rivers) of drinking water. Compared to the rest of the United States, the Western states have more systems with arsenic levels greater than 10 µg/L. Parts of the Midwest and New England have some systems whose current arsenic levels are greater than µg/L, but more systems with arsenic levels that range from 2-10 µg/L of arsenic. While many systems may not have detected arsenic in their drinking water above 10 µg/L, there may be geographic "hot spots" with systems that may have higher levels of arsenic than the predicted occurrence for that area. About 3,000 (or 5.5 percent) of the nation's 54,000 CWSs and 1,100 (or 5.5 percent) of the 20,000 NTNCWSs will need to take measures to lower arsenic in their drinking water. Of the affected systems, 97 percent serve less than 10,000 people. Table 1 below shows the estimated number of CWSs and NTNCWSs that would be affected by this rule and the estimated population served by these public water systems.

Table 1. Estimates of the Number of CWSs and NTNCWSs That Would Need to Treat and the Population Served by These Systems

Regulatory Action	Type of System and Total Number	Number Systems Affected	Total Population Served by the Affected Systems
10 µg/L	CWSs (54,000)	~ 3,000	~ 11 million
10 µg/L	NTNCWSs (20,000)	~ 1,100	~ 1.7 million

8. How much will this rule cost?

EPA estimates the total national annualized costs of treatment, monitoring, reporting, recordkeeping, and administration for this rule to be approximately $181 million (using 1999 dollars at a three percent discount rate - Table 2). Most of the cost is due to the cost of installing and operating the treatment technologies needed to reduce arsenic in public water systems (both CWSs and NTNCWS). EPA estimates the total treatment cost to be approximately $177 million per year. Annual monitoring and administrative costs will be about $2.7 million and States' costs will be approximately $1 million.

Table 2. Annual National System and State Compliance Costs (3% Discount Rate, $millions)

	CWS	NTNCWS	Total
System Costs			
Treatment	$170	$7.0	$177
Monitoring/Administrative	$1.8	$0.9	$2.7
State Costs	$0.9	$0.1	$1.0
Total Cost	$173	$8	$181

The average annual household costs for the homes served by the approximately 2,387 CWSs that require treatment are expected to be approximately $32 per year. The average annual household costs are shown categorized by system size in Table 3. The disparity in household costs between systems sizes is due to economies of scale. Larger systems are able to spread the costs they incur over a larger customer base.

Table 3. Total Annual Costs (Dollars) per Household for CWSs

System Size	25-500	501-3,300	3.3K-10K	10K-and above
Annual Household Costs	$ 327-$162	$ 71-$58	$ 38	$32-$0.86

The estimated average annual costs for CWSs, which exceed the final MCL of 10 µg/L and are required to treat, are shown in Table 4 categorized by system size.

Table 4: Average Annual Costs per CWS (Dollars)

CWS System Size	Costs ($)
25-500	$6,494-$12,358
501-3,300	$22,100-$53,086
3,300-10,000	$111, 646
10,000 and above	$531,584-$1,340,716

9. What are the benefits of this rule?

The rule will protect approximately 13 million Americans served by CWSs and NTNCWSs (this number is based on reducing arsenic from 50 to 10 µg/L) . Reducing arsenic from 50 to 10 µg/L will prevent ~ 19-31 cases of bladder cancer and ~ 5-8 deaths due to bladder cancer per year. EPA estimates that reducing arsenic from 50 to 10 µg/L will prevent ~ 19-25 cases of lung cancer and ~ 16-22 deaths due to lung cancer per year. In addition to these quantified benefits, there are substantial non-quantified benefits of this rule, including reducing the incidences of non-cancerous effects summarized above.

The quantified annual benefits for the today's rule range from $140 to $198 million. The benefit range consists of both lower and upper bound estimates. These estimates reflect the upper and lower bound of the risk range addresssed by this rule as well as different drinking water consumption distributions that were used in our analysis.

10. Is there funding associated with this rule?

Since 1996, the Drinking Water State Revolving Loan Fund (DWSRF) has made over $3.2 billion available for loans to help water systems improve their infrastructure. EPA also provides funding to States that have primary enforcement responsibility for their drinking water programs through the Public Water Systems Supervision (PWSS) grants program. Other federal funds are available through Housing and Urban Development's Community Development Block Grant Program, and the Rural Utilities Service of the U.S. Department of Agriculture. In the most recent year, 2000, the DWSRF and Rural Utilities Service combined made $1.7 billion available to States and public water systems for capital improvements and infrastructure needs.

11. How did EPA consult with stakeholders?

From 1997-1999, EPA conducted a number of Agency workgroup meetings on arsenic as well as five stakeholder meetings across the country. Representatives of eight Federal agencies, 19 state offices, 16 associations, 13 corporations, 14 consulting engineering companies, two environmental organizations, three members of the press, 37 public utilities and cities, four universities, and one Indian tribe attended the stakeholder meetings on arsenic. Five States also provided written comments on implementation issues during the rule development process. The Office of Water staff presented an overview of the arsenic rulemaking to over 900 Tribal attendees in 1998 and provided more detailed information in 1999 to 25 Tribal council members and water utility operators from 12 Indian tribes.

As part of the Small Business Regulatory and Enforcement Flexibility Act (SBREFA) consultation process, EPA also received substantial input from discussions with small entity representatives. The National Drinking Water Advisory Council (NDWAC) provided useful input, particularly on the benefits analysis and small systems affordability. We also posted discussion papers produced for our stakeholder interactions on the Office of Ground Water and Drinking Water (OGWDW) Internet site and sent them directly to participants at stakeholder meetings and others who expressed interest. In addition, EPA provided updates on our rulemaking activities at national and regional meetings of various groups and trade associations. Furthermore, we participated in technical workgroup meetings held by the American Water Works Association (AWWA). EPA received comments from over 1,100 commenters from the public on the proposed rule. EPA has considered these comments carefully in developing today's final rule for arsenic.

12. Where can the public get more information about this final rule?

For general information on arsenic in drinking water, contact the Safe Drinking Water Hotline, at (800) 426-4791, or visit the EPA Safewater website at http://www.epa.gov/safewater or the arsenic website at http://www.epa.gov/safewater/arsenic.html.

In addition to this technical fact sheet, the following documents and fact sheets will be available to the public at EPA's web site on arsenic in drinking water:

1. *Federal Register* notice of the final arsenic regulation
2. Detailed technical support documents on Arsenic in Drinking Water
3. Consumer Fact Sheet on Arsenic in Drinking Water

A copy of the *Federal Register* notice of the final regulation or any of the technical and consumer facts sheets can be obtained by contacting the Safe Drinking Water Hotline at (800) 426-4791 and (703) 285-1093. The Safe Drinking Water Hotline is open Monday through Friday, excluding Federal holidays, from 9:00 a.m. to 5:30 p.m. Eastern Time.

You will need Adobe Acrobat Reader to view the Adobe PDF files on this page. See EPA's PDF page for more information about getting and using the free Acrobat Reader.

Last updated on Tuesday, November 26th, 2002
URL: http://www.epa.gov/OGWDW/ars/ars_rule_techfactsheet.html

U.S. Environmental Protection Agency

Ground Water & Drinking Water

Drinking Water and Health Basics
Frequently Asked Questions
Local Drinking Water Information
Drinking Water Standards
List of Contaminants & MCLs
Regulations & Guidance
Public Drinking Water Systems
Source Water Protection
Underground Injection Control
Data & Databases
Drinking Water Academy
Safe Drinking Water Act
National Drinking Water Advisory Council
Water Infrastructure Security
Drinking Water For Kids!

Technical Factsheet on: CADMIUM

List of Contaminants

As part of the Drinking Water and Health pages, this fact sheet is part of a larger publication:
National Primary Drinking Water Regulations

Drinking Water Standards

MCLG: 0.005 mg/l
MCL: 0.005 mg/l
HAL(child): 1- to 10-day: 0.04 mg/L; Longer-term: 0.005 mg/L

Health Effects Summary

Acute: EPA has found cadmium to potentially cause a variety of effects from acute exposures, including: nausea, vomiting, diarrhea, muscle cramps, salivation, sensory disturbances, liver injury, convulsions, shock and renal failure.

Drinking water levels which are considered "safe" for short-term exposures: For a 10-kg (22 lb.) child consuming 1 liter of water per day, a one- to ten-day exposure to 0.04 mg/L; a longer-term (up to 7 years) exposure to 0.005 mg/L.

Chronic: Cadmium has the potential to cause kidney, liver, bone and blood damage from long-term exposure at levels above the MCL.

Cancer: There is inadequate evidence to state whether or not cadmium has the potential to cause cancer from lifetime exposures in drinking water.

Usage Patterns

2.9 million lbs of cadmium were produced in the US in 1986, and nearly twice that amount was imported in the same year.

According to 1986 estimates, cadmium is used primarily for metal plating and coating operations (35%), including transportation equipment, machinery and baking enamels, photography, television phosphors. It is also used in nickel-cadmium and solar batteries (25%), in pigments (20%), as a stabilizer in plastics and synthetic products (15%), alloys and other uses (5%). Cadmium salts have had a very limited use as fungicide for golf courses and home lawns.

Release Patterns

Cadmium occurs naturally in zinc, lead and copper ores, in coal and other fossil fuels, shales and is released during volcanic action. These deposits can serve as sources to ground and surface waters, especially when in contact with soft, acidic waters.

Major industrial releases of cadmium are due to wastestreams and leaching of landfills, and from a variety of operations that involve cadmium or zinc. These may include: during the smelting and refining of zinc, lead and copper bearing ores; during recovery of metal by processing scrap; during melting and pouring of cadmium metal; during casting of various cadmium alloy products used for coating telephone cables, trolley wires, welding, electrodes,

automatic sprinkling systems, steam boilers, fire alarms, high pressure/temperature bearings, starting switches, aircraft relays, light duty circuit breakers, low temperature solder, and jewelry; during fabrication of metal, alloys, or plated steel; during casting and use of solders; during melting of cadmium ingots for paint and pigment manufacture used for coloring of plastics and ceramic glazes, electroplating, and in chemical synthesis; during coating of metals by hot dipping or spraying; during manufacture of nickel-cadmium batteries for use in radio portable telephones, convenience appliances, and vented cells used in airplanes, helicopters, and stand-by power and lighting. The remaining cadmium emissions are from fossil fuel combustion, fertilizer application, and sewage sludge disposal.

Cadmium also occurs as a by-product of corrosion of some galvanized plumbing and distribution system materials.

From 1987 to 1993, according to EPA's Toxic Chemical Release Inventory, cadmium releases were primarily from zinc, lead and copper smelting and refining industries, with the largest releases occurring in Arizona and Utah.

Environmental Fate

The oxide and sulfide are relatively insoluble while the chloride and sulfate salts are soluble. adsorption of cadmium onto soils and silicon or aluminum oxides is strongly pH-dependent, increasing as conditions become more alkaline. When the pH is below 6-7, cadmium is desorbed from these materials. Cadmium has considerably less affinity for the absorbents tested than do copper, zinc, and lead and might be expected to be more mobile in the environment than these materials.

Studies have indicated that cadmium concentrations in bed sediments are generally at least an order of magnitude higher than in overlying water. A study of Ottawa River sediments found that sediment composed mainly of well sorted sand may be an efficient sink for heavy metals if there is a significant amount of organic material added to the sediments by the commercial activities such as logging. Both sorption and desorption were controlled by the nature of total heavy metal loading, the sediment type, and the surface water characteristics.

Addition of anions, such as humate, tartrate, to dissolved cadmium caused an increase in adsorption. The mode by which cadmium is sorbed to the sediments is important in determining its disposition toward remobilization.

Cadmium found in association with carbonate minerals, precipitated as stable solid compounds, or co-precipitated with hydrous iron oxides would be less likely to be mobilized by resuspension of sediments or biological activity. Cadmium absorbed to mineral surfaces (eg clay) or organic materials would be more easily bioaccumulated or released in the dissolved state when sediments are disturbed, such as during flooding.

Cadmium is not known to form volatile compounds in the aquatic environment.

Bioconcentration of cadmium sulfate, nitrate and chloride has been studied in a wide variety of aquatic organisms, and can be quite high in some species, low in others. For example, rainbow trout have a BCF of 33 while a BCF of 2213 was measured in the mosquito fish. Similarly, different species of clams have BCFs ranging from 160 to 3770.

Chemical/Physical Properties

CAS Number: 7440-43-9 (metal)

Color/ Form/Odor: Cadmium is a lustrous silvery metallic element found only in combined forms in nature.

Soil sorption coefficient: Koc = N/A; mobility higher than other metals

Bioconcentration Factor: Fish: 33 to 2213; Shell fish: 5 to 2500; Other invertebrates: 164 to

4190; Plants: 603 to 960.

Common Ores: sulfide- greenockite; carbonate- octavite; others: hawleyite. Also found in zinc, copper, lead ores.

Solubilities (water):

acetate- very soluble
bromide- 570 g/L at 10 deg C
carbonate- insoluble
chloride- 1400 g/L at 20 deg C
fluoroborate- very soluble
mercury sulfide- N/A
nitrate- 1090 g/L at 0 deg C
oxide- insoluble
sulfate- 755 g/L at 0 deg C
sulfide- insoluble
stearate- N/A

Other Regulatory Information

Monitoring:

-- For Ground Water Sources:

Initial Frequency-1 sample once every 3 years

Repeat Frequency-If no detections for 3 rounds, once every 9 years

-- For Surface Water Sources:

Initial Frequency-1 sample annually

Repeat Frequency-If no detections for 3 rounds, once every 9 years

-- Triggers - If detect at > 0.005 mg/L, sample quarterly.

Analysis

Reference Source	Method Number
EPA 600/4-79-020	213.2
NTIS PB 91-231498	200.7
Standard Methods	3113B

Treatment/Best Available Technologies: Coagulation/Filtration, Ion Exchange, Lime Softening, Reverse Osmosis

Toxic Release Inventory - Releases to Water and Land, 1987 to 1993 (in pounds):

	Water	Land
TOTALS	**31,487**	**2,059,574**
Top Seven States *		
AZ	503	433,035
UT	1,750	372,010
MT	0	315,965
TN	2,700	288,781
ID	250	225,761
MO	2,361	189,914
WI	0	106,000

Major Industries*

Zinc, lead smelting	5,061	831,948
Copper smelting, refining	2,253	805,045
Indust. inorganic chems	250	225,761
Electroplating, anodizing	0	106,000
Steelworks, blast furnaces	5	13,000
Inorganic pigments	5,140	7,000

* State/Industry totals only include facilities with releases greater than a certain amount - usually 1000 to 10,000 lbs.

For Additional Information:

EPA can provide further regulatory and other general information:
EPA Safe Drinking Water Hotline - 800/426-4791

Other sources of toxicological and environmental fate data include:
Toxic Substance Control Act Information Line - 202/554-1404
Toxics Release Inventory, National Library of Medicine - 301/496-6531
Agency for Toxic Substances and Disease Registry - 404/639-6000

List of Contaminants

Safewater Home | About Our Office | Publications | Calendar | Links | Office of Water | En Español

EPA Home | Privacy and Security Notice | Contact Us

Last updated on Tuesday, November 26th, 2002
URL: http://www.epa.gov/OGWDW/dwh/t-ioc/cadmium.html

U.S. Environmental Protection Agency

Ground Water & Drinking Water

Drinking Water and Health Basics
Frequently Asked Questions
Local Drinking Water Information
Drinking Water Standards
List of Contaminants & MCLs
Regulations & Guidance
Public Drinking Water Systems
Source Water Protection
Underground Injection Control
Data & Databases
Drinking Water Academy
Safe Drinking Water Act
National Drinking Water Advisory Council
Water Infrastructure Security
Drinking Water For Kids!

Technical Factsheet on: CHROMIUM

List of Contaminants

As part of the Drinking Water and Health pages, this fact sheet is part of a larger publication:
National Primary Drinking Water Regulations

Drinking Water Standards

MCLG: 0.1 mg/l
MCL: 0.1 mg/l
HAL(child): 1- to 10-day: 1 mg/L; Longer-term: 0.2 mg/L
Note: These standards are based on the total concentration of the trivalent and hexavalent forms of dissolved chromium (Cr3+ and Cr 6+).

Health Effects Summary

Acute: EPA has found chromium to potentially cause the following health effects from acute exposures at levels above the MCL: skin irritation or ulceration.

Drinking water levels which are considered "safe" for short-term exposures: For a 10-kg (22 lb.) child consuming 1 liter of water per day, a one- to ten-day exposure to 1 mg/L; a longer-term (7 years) exposure to 0.2 mg/L.

Chronic: Chromium has the potential to cause the following health effects from long-term exposures at levels above the MCL: damage to liver, kidney circulatory and nerve tissues; dermatitis.

Cancer: There is no evidence that chromium in drinking water has the potential to cause cancer from lifetime exposures in drinking water.

Usage Patterns

Chromium and its compounds are used in metal alloys such as stainless steel; protective coatings on metal; magnetic tapes; and pigments for paints, cement, paper, rubber, composition floor covering and other materials. Other uses include: chemical intermediate for wood preservatives, organic chemical synthesis, photochemical processing and industrial water treatment. In medicine, chromium compounds are used in astringents and antiseptics. They also are used in cooling waters, and in the leather tanning industry, in catalytic manufacture, and in fungicides; as an algaecide against slime forming bacteria and yeasts in brewery processing water and brewery warmer water.

Chromic acid consumption patterns in 1988: wood preserving, 63%; metal finishing, 22%; other, including water treatment, magnetic particles and catalysts, 7%; exports, 8%. Demand: 1987: 57,500 tons; 1988: 62,500 tons; 1992 (projected): 78,800 tons.

Sodium Bichromate consumption patterns in 1988: chromic acid, 54%; leather tanning, 9%; chromium oxide, 9%; pigments, 8%; wood preservation, 5%; other, including drilling muds, catalysts, water treatment, metal finishing, 5%; exports, 10%. Demand: 1987: 150,000 tons; 1988: 164,000 tons; 1992 (projected): 180,000 tons

Release Patterns

Chromium occurs in nature mostly as chrome iron ore, or chromite. Though widely distributed in soils and plants, it is rare in natural waters. The two largest sources of chromium emission in the atmosphere are from the chemical manufacturing industry and combustion of natural gas, oil, and coal.

Other sources include wind transport from road dust, cement producing plants because cement contains chromium, the wearing down of asbestos brake linings from automobiles or similar sources of wind carried asbestos since asbestos contains chromium, incineration of municipal refuse and sewage sludge, exhaust emission from automotive catalytic converters, emissions from cooling towers that use chromium compounds as rust inhibitors, waste waters from electroplating, leather tanning, and textile industries when discharged into surface waters, and solid wastes from chemical manufacture.

From 1987 to 1993, according to the Toxics Release Inventory, chromium compound releases to land and water totalled nearly 200 million pounds, of which about 99 percent was to land. These releases were primarily from industrial organic chemical industries which use chromium as an intermediate. The largest releases occurred in Texas and North Carolina. The largest direct releases to water occurred in Georgia and Pennsylvania.

Background levels in water average 1 ug/L while municipal drinking water contain 0.1-35 ug/L. The higher values of chromium can be related to sources of anthropogenic pollution. In ocean water, the mean chromium concentration is lower than in river water, and its value is 0.3 ug/l, with a range of 0.2 to 50 ug/l.

A survey of 3834 tap waters reported the concentrations of chromium to range from 0.4 to 8.0 ug/l. The reported chromium concentrations in this study may be a little higher than the actual values due to inadequate flushing of tap water before collection of samples. This indicates that the concentration of chromium in household tap water may increase due to plumbing materials.

Environmental Fate

Chromium is not likely to migrate to ground water. A field trial on the application of wastewater treatment sludge to soils found movement of heavy metals, including chromium, from the soil surface to a depth of 10 cm, but most of the metal (mean 87%) remained in the upper 5 cm of soil. Uptake by plants is generally low; it was found to be greater from ultrabasic soils by a factor of 5-40 than on calcareous or silica-based soils.

Chromium compounds are very persistent in water. Most of the chromium in surface waters may be present in particulate form as sediment. Some of the particulate chromium would remain as suspended matter and ultimately be deposited in sediments.

The exact chemical forms of chromium in surface waters are not well defined. Although most of the soluble chromium in surface waters may be present as Cr(VI), a small amount may be present as Cr(III) organic complexes. Hexavalent chromium is the major stable form of chromium in seawater; however, Cr(VI) may be reduced to Cr(III) by organic matter present in water, and may eventually deposit in sediments.

Though little data is available, there is a high potential for bioconcentration of chromium in aquatic organisms. Snails showed an accumulation factor of 1x10+6.

Chemical/Physical Properties

CAS Number: 7440-47-3

Color/ Form/Odor: Chromium is metal found in nature only in the combined state.

Soil sorption coefficient: N/A; Low mobility

Bioconcentration Factor: BCF in plants, 1000; in snails, 1,000,000; expected to accumulate in aquatic organisms.

Common Ores: oxide- Iron chromite

Solubilities:

chloride- soluble in cold water
chromate- 0.2 mg/L (lead salt)
chromate- 873 g/L at 30 deg C (sodium salt)
chromate oxide- insoluble
dichromate- 2380 g/L at 0 deg C (sodium salt)
dioxide- insoluble
oxide- insoluble
sulfate- insoluble
trioxide- 617 g/L at 0 deg C

Other Regulatory Information

Monitoring:

-- For Ground Water Sources:

Initial Frequency-1 sample once every 3 years

Repeat Frequency-If no detections for 3 rounds, once every 9 years

-- For Surface Water Sources:

Initial Frequency-1 sample annually

Repeat Frequency-If no detections for 3 rounds, once every 9 years

-- Triggers - If detect at > 0.1 mg/L, sample quarterly.

Analysis

Reference Source	Method Number
EPA 600/4-79-020	218.2
NTIS PB 91-231498	200.7
Standard Methods	3113B; 3120

Treatment/Best Available Technologies: Coagulation/Filtration; Ion Exchange, Reverse Osmosis, Lime Softening (for CrIII only)

Toxic Release Inventory - Releases to Water and Land, 1987 to 1993 (in pounds):

	Water	Land
TOTALS	**2,876,055**	**196,880,624**
Top Ten States *		
TX	102,079	64,301,920
NC	43,522	55,217,044
IN	85,570	15,955,895
OH	51,830	8,319,600
UT	1,750	5,817,015
AR	2,300	3,532,000
KY	255	2,491,519
PA	110,149	2,337,905
GA	679,721	1,404,698
ID	91,750	1,404,870

Major Industries*		
Indust. organics	3,272	120,707,814
Steelworks, Blast furn.	609,174	16,638,880
Electrometallurgy	33,269	10,796,928
Copper smelting, refining	1,750	5,817,015
Nonferrous smelting	2,300	3,532,000
Inorganic pigments	88,721	1,375,700
Pulp mills	985,800	224,198

* State/Industry totals only include facilities with releases greater than a certain amount - usually 1000 to 10,000 lbs.

For Additional Information:

EPA can provide further regulatory and other general information:
EPA Safe Drinking Water Hotline - 800/426-4791

Other sources of toxicological and environmental fate data include:
Toxic Substance Control Act Information Line - 202/554-1404
Toxics Release Inventory, National Library of Medicine - 301/496-6531
Agency for Toxic Substances and Disease Registry - 404/639-6000

List of Contaminants

Safewater Home | About Our Office | Publications | Calendar | Links | Office of Water | En Español

EPA Home | Privacy and Security Notice | Contact Us

Last updated on Tuesday, November 26th, 2002
URL: http://www.epa.gov/OGWDW/dwh/t-ioc/chromium.html

U.S. Environmental Protection Agency

Ground Water & Drinking Water

Drinking Water and Health Basics
Frequently Asked Questions
Local Drinking Water Information
Drinking Water Standards
List of Contaminants & MCLs
Regulations & Guidance
Public Drinking Water Systems
Source Water Protection
Underground Injection Control
Data & Databases
Drinking Water Academy
Safe Drinking Water Act
National Drinking Water Advisory Council
Water Infrastructure Security

Technical Factsheet on: LEAD

List of Contaminants

As part of the Drinking Water and Health pages, this fact sheet is part of a larger publication:
National Primary Drinking Water Regulations

Drinking Water Standards

MCLG: zero
Action Level: > 0.015 mg/L in more than 10 percent of tap water samples
HAL(child): none

Health Effects Summary

Acute: Lead can cause a variety of adverse health effects in humans. At relatively low levels of exposure, these effects may include interference with red blood cell chemistry, delays in normal physical and mental development in babies and young children, slight deficits in the attention span, hearing, and learning abilities of children, and slight increases in the blood pressure of some adults. It appears that some of these effects, particularly changes in the levels of certain blood enzymes and in aspects of children's neurobehavioral development, may occur at blood lead levels so low as to be essentially without a threshold.

Chronic: Chronic exposure to lead has been linked to cerebrovascular and kidney disease in humans.

Cancer: Lead has the potential to cause cancer from a lifetime exposure at levels above the action level.

Usage Patterns

Lead is the fifth most important metal in the USA economy in terms of consumption. Of this approximately 85% of the primary lead is produced domestically and 40-50% is recovered and recycled. Eighty eight percent of the lead mined in the US comes from seven mines in the New Lead Belt in southeastern Missouri; the rest coming from eight mines in Colorado, Idaho, and Utah. Three of the six USA lead smelters are from this region, the others are located in Idaho, Montana, and Texas.

Release Patterns

Lead occurs in drinking water from two sources: (1) Lead in raw water supplies, i.e., source water or distributed water, and (2) corrosion of plumbing materials in the water distribution system (corrosion by-products). Most lead contamination is from corrosion by-products.

Occurrence in Source Water and Distributed Water. Based on a variety of water quality surveys, EPA now estimates that approximately 600 groundwater systems and about 215 surface suppliers may have water leaving the treatment plant with lead levels greater than 0.005 mg/L These two sources together indicate that less than 1 percent of the public water systems in the United States have water entering the distribution system with lead levels greater than 0.005 mg/L. These systems serve less than 3 percent of people that receive their drinking water from public water systems.

From 1987 to 1993, according to the Toxics Release Inventory lead compound releases to land and water totalled nearly 144 million lbs., almost all of which was to land. These releases were primarily from lead and copper smelting industries. The largest releases occurred in Missouri, Arizona and Montana. The largest direct releases to water occurred in Ohio.

Occurrence as a Corrosion By-Product. Lead in drinking water results primarily from corrosion of materials located throughout the distribution system containing lead and copper and from lead and copper plumbing materials used to plumb public- and privately-owned structures connected to the distribution system. The amount of lead in drinking water attributable to corrosion by-products depends on a number of factors, including the amount and age of lead and copper bearing materials susceptible to corrosion, how long the water is in contact with the lead containing surfaces, and how corrosive the water in the system is toward these materials.

The potential sources of lead corrosion by-products found in drinking water can include: Water service mains (rarely), lead goosenecks or pigtails, lead service lines and interior household pipes, lead solders and fluxes used to connect copper pipes, alloys containing lead, including some faucets made of brass or bronze.

Most public water systems serve at least some buildings with lead solder and/or lead service lines. EPA estimates that there are about 10 million lead service lines/connections. About 20 percent of all public water systems have some lead service lines/connections within their distribution system.

The amount of lead in drinking water depends heavily on the corrosivity of the water. All water is corrosive to metal plumbing materials to some degree, even water termed noncorrosive or water treated to make it less corrosive. The corrosivity of water to lead is influenced by water quality parameters such as pH, total alkalinity, dissolved inorganic carbonate, calcium, and hardness. Galvanic corrosion of lead into water also occurs with lead-soldered copper pipes, due to differences in the electrochemical potential of the two metals. Grounding of household electrical systems to plumbing may also exacerbate galvanic corrosion.

Environmental Fate

Lead may enter the environment during its mining, ore processing, smelting, refining use, recycling or disposal. The initial means of entry is via the atmosphere. Lead may also enter the atmosphere from the weathering of soil and volcanos, but these sources are minor compared with anthropogenic ones.

Lead will be retained in the upper 2-5 cm of soil, especially soils with at least 5% organic matter or a pH 5 or above. Leaching is not important under normal conditions. It is expected to slowly undergo speciation to the more insoluble sulfate, sulfide, oxide, and phosphate salts.

Lead enters water from atmospheric fallout, runoff or wastewater; little is transferred from natural ores. Metallic lead is attacked by pure water in the presence of oxygen, but if the water contains carbonates and silicates, protective films are formed preventing further attack. That which dissolves tends to form ligands. Lead is effectively removed from the water column to the sediment by adsorption to organic matter and clay minerals, precipitation as insoluble salt, and reaction with hydrous iron and manganese oxide. Under most circumstances, adsorption predominates.

Lake sediment microorganisms are able to directly methylate certain inorganic lead compounds. Under appropriate conditions, dissolution due to anaerobic microbial action may be significant in subsurface environments. The mean percentage removal of lead during the activated sludge process was 82% and was almost entirely due to the removal of the insoluble fraction by adsorption onto the sludge floc and to a much lesser extent, precipitation.

The most stable form of lead in natural water is a function of the ions present, the pH, and the redox potential. In oxidizing systems, the least soluble common forms are probably the carbonate, hydroxide, and hydroxycarbonate. In reduced systems where sulfur is present, PbS is the stable solid. The solubility of Pb is 10 ppb above pH 8, while near pH 6.5 the solubility can approach or exceed 100 ppb. Pb(0) and Pb(+2) can be oxidatively methylated by naturally

occurring compounds such as methyl iodide and glycine betaine. This can result in the dissolution of lead already bound to sediment or particulate matter.

Lead does not appear to bioconcentrate significantly in fish but does in some shellfish such as mussels. Evidence suggests that lead uptake in fish is localized in the mucous on the epidermis, the dermis, and scales so that the availability in edible portions do not pose a human health danger.

Chemical/Physical Properties

CAS Number: 7439-92-1

Color/ Form/Odor: Bluish-white, silvery, gray metal, lustrous when freshly cut.

Soil sorption coefficient: N/A; Low mobility in most soils, lowest at neutral pH and high organic matter.

Common Ores: sulfide-Galena; oxide-Lanarkite; carbonate-Cerrusite; sulfate-Anglesite

Bioconcentration Factor: Log BCFs for fish, 1.65; shellfish, 3.4

Solubilities:

acetate- 443 g/L at 20 deg C
arsenate- insoluble in cold water
carbonate- 0.0011 g/L at 20 deg C
chloride- 10 g/L cold water
chromate- 0.2 mg/L
nitrate- 376.5 g/L at 0 deg C
oxide- 0.05 g/L at 20 deg C
dioxide- insoluble
phosphate- insoluble
sulfate- 0.4 g/L
sulfide- insoluble
tetraethyl- 0.29 mg/L at 25 deg C
thiocyanate- 0.5 g/L at 20 deg C
thiosulfate- 0.3 g/L cold water

Other Regulatory Information

Monitoring:	**For Lead**	**For Water Quality Parameters**	
&$160;	At Home Taps	Within the Distribution System	At Entry to the Distribution System
Monitoring Period			
Initial	Every 6 months	Every 6 months	Every 6 months
After corrosion control installation	Every 6 months	Every 6 months	Every 2 weeks
Reduced monitoring			
- Conditional	Once a year	Every 6 months	Every 2 weeks
- Final	Every 3 years	Every 3 years	Every 2 weeks

Analysis

Reference Source	**Method Number**
EPA 800/4-83-043	239.2; 200.8; 200.9

Treatment/Best Available Technologies

Source water: Ion exchange; lime softening; reverse osmosis; coagulation/filtration

Corrosion Control: pH and alkalinity adjustment; calcium adjustment; silica- or phosphate-based

corrosion inhibition

Toxics Release Inventory - Water and Land Releases, 1987-93 (in pounds)

	Water	Land
TOTALS	**970,827**	**143,058,771**
Top Twelve States *		
MO	4,408	40,656,278
AZ	771	23,240,625
MT	0	20,822,517
UT	4,600	11,881,000
TX	1,988	11,515,211
OH	127,990	5,196,522
IN	62,894	4,851,940
TN	7,140	2,095,489
IL	26,601	1,930,000
WI	1,310	1,350,960
MN	0	1,313,895
NM	0	1,060,880
Major Industries*		
Lead smelting, refining	31,423	68,996,819
Copper smelting	5,371	34,942,505
Steelworks, blast furn.	379,849	18,149,696
Storage batteries	0	1,867,292
China plumbing fixtures	1,310	1,350,960
Iron foundries	10,021	1,274,777
Copper mining	0	1,240,000

* State/Industry totals only include facilities with releases greater than 100,000 lbs.

For Additional Information:

EPA can provide further regulatory and other general information:
EPA Safe Drinking Water Hotline - 800/426-4791

Other sources of toxicological and environmental fate data include:
Toxic Substance Control Act Information Line - 202/554-1404
Toxics Release Inventory, National Library of Medicine - 301/496-6531
Agency for Toxic Substances and Disease Registry - 404/639-6000

List of Contaminants

Safewater Home | About Our Office | Publications | Calendar | Links | Office of Water | En Español

EPA Home | Privacy and Security Notice | Contact Us

Last updated on Tuesday, November 26th, 2002
URL: http://www.epa.gov/OGWDW/dwh/t-ioc/lead.html

U.S. Environmental Protection Agency

Ground Water & Drinking Water

Drinking Water and Health Basics
Frequently Asked Questions
Local Drinking Water Information
Drinking Water Standards
List of Contaminants & MCLs
Regulations & Guidance
Public Drinking Water Systems
Source Water Protection
Underground Injection Control
Data & Databases
'nking Water Academy
Safe Drinking Water Act
National Drinking Water Advisory Council
Water Infrastructure Security
Drinking Water For Kids!

Technical Factsheet on: SELENIUM

List of Contaminants

As part of the Drinking Water and Health pages, this fact sheet is part of a larger publication:
National Primary Drinking Water Regulations

Drinking Water Standards

MCLG: 0.05 mg/l
MCL: 0.05 mg/l
HAL(child): none

Health Effects Summary

Acute: Selenium is an essential nutrient at low levels. However, EPA has found it to potentially cause the following health effects from acute exposures at levels above the MCL: hair and fingernail changes; damage to the peripheral nervous system; fatigue and irritability.

No Health Advisories have been established for short-term exposures.

Chronic: Selenium has the potential to cause the following health effects from long-term exposures at levels above the MCL: hair and fingernail loss; damage to kidney and liver tissue, and the nervous and circulatory systems.

Cancer: There is no evidence that selenium has the potential to cause cancer from lifetime exposures in drinking water.

Usage Patterns

Selenium is used extensively in the manufacture and production of glass, pigments, rubber, metal alloys, textiles, petroleum, medical therapeutic agents, and photographic emulsions. Selenium dioxide is the most widely used selenium compound in industry. It is used as an oxidizing agent in drug and other chemical manufacture; a catalyst in organic syntheses; an antioxidant in lubricating oils.

Production in 1985 was reported to be 429,515 pounds, with demand for its various uses as follows: electronic and photocopier components, 35%; Glass manufacturing, 30%; Chemical and pigments, 25%; and Other, 10%.

Release Patterns

There are no true deposits of selenium anywhere and it cannot economically be recovered from the earth directly. It usually occurs in the sulfide ores of the heavy metals; this includes pyrite, clausthalite, naumannite, tienammite and in selenosulfur. Soils in the neighborhood of tend to have enriched amounts of selenium. Selenium is the most strongly enriched element in coal, being present as an organoselenium compound, a chelated species, or as an adsorbed element.

Selenium compounds are released to the air during the combustion of coal and petroleum fuels, and during the smelting and refining of other metals.

From 1987 to 1993, according to the Toxics Release Inventory selenium releases to land and water totalled over 1 million lbs., of which about 99 percent was to land. These releases were primarily from copper smelting industries. The largest releases occurred in Utah. The largest direct releases to water occurred in Indiana.

Selenium concentration in fresh water is usually around 0.02 ppm. The selenium content of surface water is greatly influenced by pH, being high in acidic (pH < 3.0) and in alkaline waters (pH > 7.5). Traces of selenium ranging from 0.0000-0.01 ppm are commonly found in community drinking water.

Environmental Fate

The toxicity of selenium depends on whether it is in the biologically active oxidized form. In alkaline soils and oxidizing conditions, selenium may be oxidized sufficiently to maintain the availability of its biologically active form, and cause plant uptake of the metal to be increased.

In acidic or neutral soils, it tends to remain relatively insoluble and the amount of biologically available selenium should steadily decrease. Selenium volatilizes from soils when converted to volatile selenium compounds (such as dimethyl selenide, dimethyl diselenide, and others) by microorganisms.

It is known that selenium accumulates in living tissues. For example, the selenium content of human blood is about 0.2 ppm. This value is about 1000 times greater than the selenium found in surface waters. It is clear that the human body does accumulate or concentrate selenium with respect to the environmental levels of selenium. Selenium has been found in marine fish meal at levels of about 2 ppm. This amount is around 50,000 times greater than the selenium found in seawater.

Selenium dioxide is the primary source of problems from industrial exposures since the dioxide forms selenious acid with water or sweat, and the acid is an irritant. Selenium compounds released during coal or petroleum combustion may be a significant source of exposure.

Chemical/Physical Properties

CAS Number: 7782-49-2

Color/ Form/Odor: Selenium is a metal which exists in nature only in the combined form.

Soil sorption coefficient: N/A

Bioconcentration Factor: BCF of 1000 in humans; 50,000 in marine fish

Solubilities:

dioxide- 384 g/L at 14 deg C
hydrogen- 3.8 L/L at 4 deg C
sodium- 850 g/L at 20 deg C
sulfide- insoluble

Common Ores: Usually found in the sulfide ores of the heavy metals, such as pyrite, clausthalite, naumannite, tiemannite. Also found in coal.

Other Regulatory Information

Monitoring:

-- For Ground Water Sources:

Initial Frequency-1 sample once every 3 years

Repeat Frequency-If no detections for 3 rounds, once every 9 years

-- For Surface Water Sources:

Initial Frequency-1 sample annually

Repeat Frequency-If no detections for 3 rounds, once every 9 years

-- Triggers - If detect at > 0.05 mg/L, sample quarterly.

Analysis

Reference Source	Method Number
EPA 600/4-79-020	270.2
ASTM Standards 1991	D3859-84A; D3859-88
Standard Methods (17th ed.)	3113B; 3114B

Treatment/Best Available Technologies: Activated Alumina, Coagulation/Filtration (SeVI only), Lime Softening, Reverse Osmosis, Electrodialysis

Toxic Release Inventory - Releases to Water and Land, 1987 to 1993 (in pounds):

	Water	Land
TOTALS	**13,556**	**1,010,686**
Top Five States*		
UT	1,578	696,515
AZ	0	260,632
WI	0	45,000
IN	5,300	0
TX	359	4,920
Major Industries*		
Copper smelting, refining	1,500	962,067
Metal coatings	0	45,000
Petroleum refining	8,949	977

* Land totals only include facilities with releases greater than 1000 lbs.

For Additional Information:

EPA can provide further regulatory and other general information:
EPA Safe Drinking Water Hotline - 800/426-4791

Other sources of toxicological and environmental fate data include:
Toxic Substance Control Act Information Line - 202/554-1404
Toxics Release Inventory, National Library of Medicine - 301/496-6531
Agency for Toxic Substances and Disease Registry - 404/639-6000

List of Contaminants

Last updated on Tuesday, November 26th, 2002
URL: http://www.epa.gov/OGWDW/dwh/t-ioc/selenium.html

May 2002

25290-000-0000

APPENDIX A

SITE HEALTH AND SAFETY PLAN
J-PIT REDEVELOPMENT SITE
GARY, INDIANA

Prepared for

City of Gary
Department of Environmental Affairs
504 Broadway, Suite 1012
Gary, Indiana 46402

Prepared by

Baker Environmental, Inc.
701 East 83rd Avenue
Merrillville, Indiana 46410
April 2002

Prepared by

Baker

Baker
Environmental, Inc.
Merrillville, Indiana

May 2002

25290-000-0000

APPENDIX A

SITE HEALTH AND SAFETY PLAN
J-PIT REDEVELOPMENT SITE
GARY, INDIANA

Prepared for

City of Gary

Department of Environmental Affairs

504 Broadway, Suite 1012
Gary, Indiana 46402

Prepared by

Baker Environmental, Inc.

701 East 83rd Avenue
Merrillville, Indiana 46410
April 2002

Prepared by

Baker

Baker
Environmental, Inc.
Merrillville, Indiana

SITE HEALTH AND SAFETY PLAN
FOR
THE J-PIT REDEVELOPMENT SITE
GARY, INDIANA
TABLE OF CONTENTS

Section	Title	Page
1	**INTRODUCTION**	**1**
	1.1 Scope and Applicability	1
	1.2 Visitors	1
2	**KEY PERSONNEL/IDENTIFICATION OF HEALTH AND SAFETY PERSONNEL**	**3**
	2.1 Key Personnel	3
	2.2 Site-Specific Health and Safety Personnel	4
	2.3 Organizational Responsibility	5
3	**TASK/OPERATION SAFETY AND HEALTH RISK ANALYSIS**	**6**
	3.1 Historical Overview of the Site	6
	3.2 Task-by-Task Risk Analysis	6
	3.2.1 Drilling Operations (All Phases)	7
	3.2.2 Geo-probe Investigations	8
	3.2.3 Monitoring Well Development/Groundwater Sampling/ Aquifer Tests (All Phases)	8
	3.2.4 Soil Sampling (All Phases)	9
	3.2.5 Sediment and Surface Water Sampling	9
	3.2.6 Surveying	9
4	**PERSONNEL TRAINING REQUIREMENTS**	**11**
	4.1 Preassignment and Annual Refresher Training	11
	4.2 Site Supervisors Training	11
	4.3 Training and Briefing Topics	12
5	**PERSONAL PROTECTIVE EQUIPMENT TO BE USED**	**14**
	5.1 Levels of Protection	14
	5.2 Level A Personal Protective Equipment	15
	5.3 Level B Personal Protective Equipment	15
	5.4 Level C Personal Protective Equipment	15
	5.5 Level D Personal Protective Equipment	16
	5.6 Reassessment of Protection Program	16
	5.7 Specific Levels of Protection Planned for the J-Pit Redevelopment Site	16
	5.8 Chemical Resistance and Integrity of Protective Material	17
	5.9 Standard Operating Procedures for Respiratory Protection Devices	17
	5.9.1 Maintenance of Air Purifying Respirators (APRs)	17
	5.9.1.1 Cleaning and Disinfecting APRs	17
	5.9.1.2 APR Inspection and Checkout	18
	5.9.1.3 Storage of APRs	19

TABLE OF CONTENTS
(CONTINUED)

Section	Title	Page
	12.1 Spill Response Plan	36
13	**HAZARDOUS COMMUNICATIONS PROGRAM**	**37**
	13.1 Hazard Communication Plan	37
14	**HEALTH AND SAFETY PLAN (HASP) REVIEW AND MODIFICATION**	**38**

LIST OF ACRONYMS

ACGIH	American Conference of Governmental and Industrial Hygienists
ASTM	American Society for Testing and Materials
BAKER	Baker Environmental, Inc.
BTEX	Benzene, Toluene, Ethylbenzene, Xylene
CFR	Code of Federal Regulations
COC	Chain of Custody
CRZ	Contamination Reduction Zone
EZ	Exclusion Zone
HASP	Health and Safety Plan
HAZWOPER	Hazardous Waste Operations and Emergency Response
IDEM	Indiana Department of Environmental Management
IDLH	Immediately Dangerous to Life and Health
LEL	Lower Explosive Limit
MSDS	Material Safety Data Sheet
MS/MSD	Matrix Spike/Matrix Spike Duplicate
NA	Not Applicable
ND	Non-Detect
NIOSH	National Institute for Occupational Safety and Health
OSHA	Occupational Safety and Health Administration
PEL	Permissible Exposure Limit
PID	Photoionization Detector
PNA	Polynuclear Aromatic Hydrocarbon
PPE	Personal Protective Equipment
PVC	Polyvinyl Chloride
QA/QC	Quality Assurance/Quality Control
QAPP	Quality Assurance Project Plan
SHSC	Site Health and Safety Coordinator
SIMA	SIMALABS International
SOP	Standard Operating Procedure
SVOC	Semi-volatile Organic Compound
TDS	Total Dissolved Solids
TLV	Threshold Limit Values
UEL	Upper Explosive Limit

1.0 INTRODUCTION

This section of the site Health and Safety Plan (HASP) defines general applicability and general responsibilities with respect to compliance with Health and Safety programs.

1.1 Scope and Applicability

The purpose of this HASP is to define the requirements and designate protocols to be followed at the J-Pit Redevelopment Site (Site) during Limited Phase II Environmental Site Assessment (Phase II ESA) activities. Applicability extends to all government employees, contractors, subcontractors, and visitors. Relevant sections of this plan must be reviewed and an agreement to comply with the requirements must be signed by all personnel prior to entering any Exclusion Zone or Contamination Reduction Zone.

During development of this plan, consideration was given to current safety standards as defined by Occupational Safety and Health Administration/National Institute of Occupational Safety and Health (OSHA/NIOSH), health effects data and standards for known constituents, and procedures designed to account for the potential for exposure to unknown substances. Specifically, the following most recent reference sources have been consulted:

- OSHA 29 CFR 1910.120 AND 40 CFR PARTS 300.150 AND 311
- OSHA 29 CFR 1926
- NIOSH Pocket Guide, 1990
- Genium Publishing Corporation, Geniums Reference Collection, MSDSs

All operations and equipment at the J-Pit Redevelopment Site will comply with 29 CFR 1910.120 and other applicable portions of 29 CFR 1910 and 29 CFR 1926.

1.2 Visitors

Visitors who wish to enter any Contamination Reduction Zone or Exclusion Zone at the Site will be required to read and verify compliance with the provisions of this HASP. In addition, visitors will be expected to comply with relevant OSHA requirements such as training (Section 4), medical monitoring (Section 6), and respiratory protection (HASP Appendix A). Visitors will also be expected to provide their own protective

2.0 KEY PERSONNEL/IDENTIFICATION OF HEALTH AND SAFETY PERSONNEL

2.1 Key Personnel

The following personnel and organizations are critical in the planned activities at the Site.

City of Gary Representatives

Project Manager
Ms. Mary Mulligan
City of Gary
504 Broadway Suite 1012
Gary, Indiana 46402
(219) 882-3000

Coordinator
Ms. Dorreen Carey
City of Gary
504 Broadway Suite 1012
Gary, Indiana 46402
(219) 882-3000

Baker Environmental, Inc. (Baker) Representatives

Project Manager
Mr. Richard M. Spitaler
701 East 83rd Avenue
Merrillville, Indiana 46410
(219) 736-0263 or (800) 473-6847
Cell Phone: (219) 808-8672

Technical Manager
Mr. James Peyton, Baker
701 East 83rd Avenue
Merrillville, Indiana 46410
(219) 736-0263

Site Health and Safety Coordinator
Mr. Richard Spitaler
701 East 83rd Avenue
Merriville, Indiana 46410
(219) 736-0263

requirements, provide site access, and that the health and safety of all site personnel is a primary concern.

BAKER

Baker Environmental, Inc. (Baker), as a contractor for this site, will be responsible for data collection and other activities associated with proper conduct of the environmental assessment including implementation of this HASP.

V3 Consultants

V3 Consultants, as a contractor for this site, will be responsible for wetlands delineation and other activities associated with proper conduct of the environmental assessment including implementation of this HASP.

3.0 TASK/OPERATION SAFETY AND HEALTH RISK ANALYSIS

This section of the HASP defines the hazards identified during previous site work and review of background information, as related to specific field tasks and activities.

3.1 Overview of the Site

The approximately 200-acre J-Pit Redevelopment Site, is located within the 8,200 acre Airport Development Zone in the City of Gary. The area is comprised of the approximately the 100 acre Greenspace Site (a former sand mine known as the J-Pit), and about 100 adjacent acres of abandoned and undeveloped property which is divided into four sections. Background information and historic sample data for the J-Pit Redevelopment site are contained in detail in the Sampling and Analysis Plan (SAP) (Appendix B of QAPP). The site is depicted in Figure 3-1.

3.2 Task-by-Task Risk Analysis

This evaluation of hazards is based on the knowledge of site background and anticipated risks posed by the specific tasks conducted. The subsections that follow describe each task/operation in terms of the specific hazards associated with it. Also identified are the protective measures to be implemented during completion of those tasks/operations.

The primary purpose of the Phase II ESA is to determine the extent of groundwater contamination down gradient from the site and extent of contaminated soils remaining on-site.

The Phase II objectives include the following:

- Define boundaries for areas of potential concern;
- Conduct surface and subsurface soil investigation using Geoprobe® drill rig;
- Conduct test pit investigations;
- Install monitoring wells;
- Perform groundwater monitoring sampling event for the Site; and
- Collect surface water and sediment samples

by all personnel during the Test Pit investigation. The crew will consist of one person operating backhoe or excavator, one laborer, and one geologist providing supervision and oversight.

The SHSC will perform air monitoring at the boreholes as well as at the breathing zone during Test Pit operations with a PID. All PID screening, logging, and sample collection will be conducted remotely from the excavator bucket. No personnel will enter the excavation. The SHSC will be responsible for implementing the HASP and determining any level-of-protection upgrades (Subsection 7.3.1). No unusual sampling methods or site conditions are anticipated that could pose any unique health and safety considerations.

The potential chemical, physical, and biological hazards are presented in Tables 3-1, 3-2, and 3-3. Utilities both above and below ground will be located and cleared prior to any Test Pit activities. Equipment shall be placed a minimum of 20 feet from electric lines or the lines shall be de-energized and/or insulated to prevent contact or arcing.

3.2.3 Monitoring Well Development/Groundwater Sampling/Aquifer Tests (All Phases)

Upon installation, each of the monitoring wells will be developed. Following well development, groundwater samples will be obtained from each monitoring well. Chemical hazards associated with tasks where monitoring wells are opened and well water is removed, are expected to be minimal. PID monitoring will be performed as an initial assessment of well conditions when the well cap is removed (and throughout the task as appropriate -- see Subsection 7.3). No monitoring will be required at residential well unless it is determined by site personnel to be useful. Depending on the weather, heat or cold stress could be a hazard. There is also the usual slip/trip/fall physical hazard. The potential chemical and physical hazards are indicated in Tables 3-1 and 3-2. Biological hazards are as indicated in Table 3-3. Modified Level D protection (Section 5) will be used and Level C will be available as a contingency. Groundwater sampling procedures are presented in detail in the SAP (Appendix B of QAPP).

3.2.4 Soil Sampling (All Phases)

Subsurface soil samples will be collected using a Geoprobe® or truck-mounted drill rig. Soil samples shall be collected by Geoprobe® and also from select monitor well locations using the drill rig. The Geoprobe® drill rig shall collect soil samples using a 4-foot long, 1.5 inch diameter MacroCore® sampler from the

perform their surveys from locations where no exposure potential exists with assistance and direction from Baker. Physical and biological hazards are indicated in Tables 3-2 and 3-3.

4.0 PERSONNEL TRAINING REQUIREMENTS

All site personnel will be trained in accordance with OSHA's 29 CFR 1910.120 regulation covering Hazardous Waste Operations and Emergency Response. At a minimum, all personnel will be trained to recognize the hazards associated with each task, the requirements of this HASP, site specific emergency procedures, and associated responsibilities.

4.1 Preassignment and Annual Refresher Training

Each employer will be responsible for certifying that its employees meet the requirements of a 40-hour preassignment training and 8-hour annual refresher training in compliance with OSHA, prior to arrival on site (see Exhibit E). This training shall cover hazard recognition, respiratory protective equipment use, and site operations. Each employee will provide the SHSC with a document certifying dates of training attendance and latest annual refresher training. The Health and Safety Training Records are included in Exhibit E.

4.2 Site Supervisors Training

Consistent with OSHA 29 CFR 1910.120 paragraph (e)(4), individuals designated as site supervisors require an additional 8 hours of training. The specific training requirements for supervisors include, but are not limited to, principles of supervision, elements of health and safety decision-making, the employer's health and safety program and the associated employee training program, PPE program, spill containment program, and health hazard monitoring procedure and techniques.

The following individuals are identified as site supervisors:

Name	Title/Responsibility
Richard Spitaler	Geologist/Field Team Leader
Tom Noble	Environmental Scientist/Alternate Field Team Leader

Site-Specific Training Meeting	Daily	Periodically	
		X	Decontamination, Sec. 9; 29 CFR 1910.120(k).
X		X	Emergency response, Sec. 11; 29 CFR 1910. 120(1).
X		X	Elements of an emergency response, Sec. 11; 29 CFR 1910.120(1).
X		X	Procedures for handling site emergency incidents, Sec. 11; 29 CFR 1910.120(1).
X		X	Shipping and transport, 49 CFR 172.101, IATA.
X		X	Fire extinguishers.
X		X	Sanitation.
X		X	Illumination.

5.0 PERSONAL PROTECTIVE EQUIPMENT TO BE USED

This section describes the general requirements of the U.S. EPA-designated Levels of Protection (A-D), and the specific levels of protection required for each task at the Site. Table 5-1 lists the various tasks and identifies the level of protection for each.

5.1 Levels of Protection

Personnel must wear protective equipment when response activities involve known or suspected atmospheric contamination, when vapors, gases, or particulates may be generated by site activities, or when direct contact with skin-affecting substances may occur. Full face piece respirators protect lungs, gastrointestinal tract, and eyes against airborne toxicants. Chemical-resistant clothing protects the skin from contact with skin-destructive and absorbable chemicals.

The specific levels of protection and their necessary components have been divided into four categories according to the degrees of protection afforded:

- Level A: Should be worn when the highest level of respiratory, skin, and eye protection is needed.

- Level B: Should be worn when the highest level of respiratory protection is needed, but a lesser level of skin protection. Level B is the primary level of choice when encountering unknown environments.

- Level C: Should be worn when the criteria for using air-purifying respirators are met, and a lesser level of skin protection is needed.

- Level D: Should be worn only as a work uniform and not on any site with respiratory or skin hazards. It provides minimal protection against chemical hazards.

Modifications of these levels are permitted, and routinely employed during site work activities to maximize efficiency. For example, Level C respiratory protection and Level D skin protection may be required for a given task. Likewise the type of chemical protective ensemble (i.e., material, format) will depend upon constituents, degrees of contact, etc.

5.6 Reassessment of Protective Program

Upon approval of the SHSC and City of Gary contractors Health and Safety Department, the level of personal protective equipment to be used will be upgraded or downgraded based upon a change in site conditions or findings of investigations. If a significant change occurs, the hazards will be reassessed. Indicators of the need for reassessment are:

- Commencement of a new work phase, such as work that begins on a different portion of the site.
- Change in job tasks during a work phase.
- Change of significant wind direction/season/weather.
- Contaminants other than those previously identified are being handled.
- Change in ambient levels of constituents.
- Change in work scope which effects the degrees of contact with contaminants.

Standard Operating procedures for inspecting PPE are included in Exhibit G.

5.7 Specific Levels of Protection Planned for the Site

The following levels of protection will be utilized during activities at the Site (including the contingency levels of protection):

/ / Level A:	/ / modified
/ / Level B:	/ / modified
/X/ Level C:	/ / modified
/X / Level D:	/X/ modified

5.8 Chemical Resistance and Integrity of Protective Material

The selection of protective clothing will be based upon a review of the manufacturer's findings as to chemical resistance, permeation, resistance, integrity, and the specific tasks to be performed. Only those items found to provide acceptable protection will be utilized.

5.9.1.2 APR Inspection and Checkout

APRs in active use should be inspected and checkout at least on a daily basis. The steps to be followed during inspection and checkout are as follows:

- Visually inspect the entire unit for any obvious damages, defects, or deteriorated rubber.
- Make sure that the facepiece harness is not damaged. The serrated portion of the harness can fragment which will prevent proper face seal adjustment.
- Inspect lens for damage and proper seal in facepiece.
- Exhalation Valve - pull off plastic cover and check valve for debris or for tears in the neoprene valve (which could cause leakage).
- Inhalation Valves (two) - screw off cartridges/canisters and visually inspect neoprene valves for tears. Make sure that the inhalation valves and cartridge retainer gaskets are in place.
- Make sure a protective cover lens is attached to the lens.
- Make sure the speaking diaphragm retainer ring is hand tight.
- Make sure that you have the correct cartridge.
- Don and perform negative and positive pressure test.

5.9.1.3 Storage of APRs

OSHA requires that respirators be stored to protect against:

- Dust.
- Sunlight.
- Heat.

6.0 MEDICAL SURVEILLANCE REQUIREMENTS

A medical monitoring program (which is a part of the City of Gary contractors Health and Safety Program) is designed to track the physical condition of employees on a regular basis as well as survey pre-employment or baseline conditions. With this program, all regulatory requirements for medical monitoring are completed. The medical surveillance program, for initial and annual exams, conducted for Baker employees is included in Exhibit F.

6.1 Baseline Monitoring

Prior to being assigned to a hazardous or a potentially hazardous activity involving the potential for exposure, each employee receives a baseline physical. For City of Gary contractor personnel, the content of the physical is determined by a medical consultant.

The baseline physical will categorize employees as fit-for-duty and able to wear respiratory protection. Documentation will be provided by each employee of the medical surveillance as well as the date of the most recent respirator fit test and certification.

6.2 Periodic Monitoring

In addition to a baseline physical, all employees undergo an updated physical every 12 months.

All personnel working in contaminated or potentially contaminated areas at the Site will verify current status (within 12 months) with respect to medical monitoring. This is done by indicating date of last physical on the Safety Plan Agreement Form (HASP Exhibit E).

6.3 Site-Specific Medical Monitoring

No site-specific medical monitoring will be required for individuals entering the Exclusion Zone or Contamination Reduction Zone at the Site.

7.0 FREQUENCY AND TYPES OF AIR MONITORING/PERSONNEL SAMPLING

This section explains the general concepts of an air monitoring program and specifies the monitoring activities that will take place during activities at the Site.

The purpose of air monitoring is to identify and quantify airborne contaminants in order to verify and determine the level of worker protection needed. Initial screening for identification is often qualitative, i.e., the constituent, or the class to which it belongs, is demonstrated to be present but the determination of its concentration (quantification) must await subsequent testing. Two principal approaches are available for identifying and/or quantifying airborne contaminants:

- The on-site use of direct-reading instruments.
- Laboratory analysis of air samples obtained by gas sampling bag, collection media (i.e., filter, sorbent), and/or wet-contaminant collection methods.

Based on results initial screening during previous investigations, the only airborne contaminants of concern present on the site are organic gases and vapors. These contaminants shall be monitored using direct read PID instruments within the breathing zone at site activity areas.

7.1 On-Site Use of Direct-Reading Monitoring Instruments

Unlike air sampling devices, which are used to collect samples for subsequent laboratory analysis, direct-reading instruments provide data at the time of sampling, enabling rapid decision-making. Data obtained from the real-time monitors are used to assure proper selection of personnel protective equipment, engineering controls, and work practices. Overall, the instruments provide the user the capability to determine if site personnel are being exposed to concentrations which exceed exposure limits or action levels for specific hazardous materials.

Of significant importance, is the potential of real-time monitors in identifying Immediately Dangerous to Life and Health (IDLH) conditions where toxic levels of airborne contaminants are present. Periodic monitoring of conditions is critical especially if exposures have increased since initial monitoring or if new site activities have begun.

7.3.1 Site Air Monitoring and Sampling Program

A. Air Monitoring Instruments

X 1. Real-time PID monitors (for organic vapors).
2. Real-time aerosol monitors (for particulates).
3. Explosimeters (for explosive environments).
4. Oxygen monitors (for oxygen levels).

B. Air Monitoring Frequency

1. Four times daily - twice in morning and twice in afternoon.
2. Twice daily - once in morning and once in afternoon.
X 3. Continuous

Note: For tasks where monitoring is indicated "as appropriate" in Section 3, frequency will be upon initiation of each task when work begins on a different portion of the site, and twice daily at a minimum. If readings above background are encountered, frequency will be continuous until levels return to background (also see Section 5.6 for further requirements for reassessments of protection program).

C. Monitoring Locations

1. Upwind and downwind of site activities to determine background levels (outside the Contamination Reduction Zone) and ensure site control zone boundaries remain appropriate.
2. Near residents, etc.
X 3. Key site activity locations:
   - X decon area
   - X breathing zone during drilling and sampling operations
   - staging area
   - excavation area
   - field lab area
   - X borehole
   - storage tanks
   - X monitoring wells, when cap is removed
   - lagoons

4. Fixed stations.

D. Action Levels

E. Reporting Format

8.0 SITE CONTROL MEASURES

The following sections define the measures and procedures for maintaining site control. Site control is an essential component in the successful implementation of the site health and safety program. Table 8-1 details personnel/site control requirements for each task to be conducted at the Site.

8.1 Buddy System

During all tasks, the implementation of a buddy system or telephone/radio communication is mandatory. A buddy system requires at least two people who work as a team; each looking out for each other (Level B operations require three people). Table 8-1 lists those tasks, which require a buddy system or telephone/radio communication and any additional requirements.

8.2 Site Communications Plan

Successful communication between field teams and personnel in the support zone is essential. The following communications systems will be available during activities at the Site.

X Radios: Two way (intrinsically safe)

X Compressed air horn

X Hand signals: For communications during drill rig and test pit operations, standard signals will be used (see HASP Exhibit B).

8.3 Work Zone Definition

The Exclusion Zone is defined as the area where contamination is either known or likely to be present, or because of activity, will provide a potential to cause harm to personnel. Entry into the Exclusion Zone requires the appropriate use of personal protective equipment.

The Contamination Reduction Zone is the area in which personal and equipment decontamination is conducted. This area is essentially a buffer zone between contaminated areas and clean areas. Activities to be conducted in this zone will require levels of personal protection as defined in the decontamination plan which is located in Section 9 of this document.

9.0 DECONTAMINATION PLAN

Table 5-1 lists the tasks and specific levels of protection required for each. Consistent with the levels of protection required, Tables 9-1 and 9-2 provide a step-by-step representation of the personnel decontamination process for Levels C and D.

9.1 Levels of Decontamination Protection Required for Personnel

The levels of protection required for personnel assisting with decontamination will be modified Level D. Dependent upon changes in site conditions and/or concentrations of contaminants, an upgrade to Level C may be required. Personnel decontamination steps are listed on Table 9-1 and 9-2 for level C and D PPE, respectively.

9.2 Equipment Decontamination

Sampling and drilling equipment will be decontaminated in accordance with procedures as defined in the SAP. All other drilling equipment will be washed down with water at high pressure to volatilize and remove contamination and visible dirt; and will be allowed to air dry. This activity will be performed so that overspray from high-pressure cleaning is carried away from personnel. Decontamination activities will be monitored by the SHSC and any discrepancies corrected. MSDSs for possible decontamination chemicals to be used at the Site are included in HASP Exhibit C.

9.3 Disposition of Decontamination Wastes

All purge water and any associated decontamination fluids, will be placed into properly labeled 55-gallon drums or polyvinyl tanks, and stored in a secured area within the Site property pending analytical results. Soil cuttings may be drummed or stockpiled on plastic sheeting, covered with plastic sheeting and disposed with the soils to be excavated. Health and safety disposables, such as sampling gloves, paper towels, or other materials which may come in contact with potentially contaminated materials will be placed in suitable containers (such as fiber drums or plastic bags to reduce costs) and stored with the solid and fluid wastes pending analytical results.

10.0 EMERGENCY RESPONSE/CONTINGENCY PLAN

This section describes contingencies and emergency planning procedures to be implemented at the Site.

10.1 Pre-Emergency Planning

During the site briefings held periodically/daily, all employees will be trained in and reminded of provisions of the emergency response plan, communication systems, and evacuation routes.

The emergency response plan will be reviewed and revised (with proper approvals) as necessary by the SHSC in order to ensure that it is adequate and up-to-date with prevailing site conditions.

10.2 Lines of Authority

The SHSC has primary responsibility for responding to and correcting emergency situations. This includes taking appropriate measures to ensure the safety of site personnel and the public. Possible actions may involve evacuation of personnel from the site area, and evacuation of adjacent residents. The SHSC is additionally responsible for ensuring that corrective measures have been implemented, appropriate authorities notified, and any followup reports completed (see Exhibit H).

The individual subcontractor organizations are responsible for assisting the SHSC within the parameters of their scope of work.

10.3 Emergency Recognition/Prevention

Tables 3-1, 3-2, and 3-3 provide a listing of chemical, physical, and biological hazards onsite. Additional hazards as a direct result of site activities are listed in Table 10-1, along with prevention and control techniques/mechanisms.

10.4 Evacuation Routes/Procedures

In the event of an emergency, which necessitates an evacuation of the Site, an air horn will be sounded three times in succession. Personnel will be expected to proceed to the exit (in pairs if possible) and mobilize to

10.6 Emergency Contact/Notification System

The names and telephone numbers for emergency organizations/personnel that may need to be contacted are detailed in Table 10-2.

10.7 Medical Emergencies

10.7.1 Response to Medical Emergencies

In the event of an injury or exposure, trained site personnel will administer first aid up to the level of their training. The following Baker individuals have current certification in CPR and First Aid:

Richard Spitaler
Tom Noble
Lakisha Arif-Holmes

If there is any indication of need or the injured or exposed personnel, or the SHSC, or Site Manager believes there is need; additional examination and care will be obtained at the local medical emergency facility.

Any person who becomes ill or injured in the exclusion zone must be decontaminated to the maximum extent possible. If the injury or illness is minor, full decontamination should be completed and first aid administered prior to transport. If the patient's condition is serious, at least partial decontamination should be completed (i.e., complete disrobing of the victim and redressing in clean coveralls or wrapping in a blanket.) First aid should be administered while awaiting an ambulance or paramedics. All injuries and illnesses must immediately be reported to the City of Gary contractor SHSC who in turn, must report them to the City of Gary contractors Corporate Health and Safety Department.

Any person being transported to a clinic or hospital for treatment must have sent with them information on the chemical(s) they have been exposed to at the site.

Any vehicle used to transport contaminated personnel, will be treated and cleaned as necessary.

10.9 Spill or Leaks

In the event of a spill or a leak site personnel will:

- Inform SHSC immediately.
- Locate the source of the spillage.
- Assess the situation.
- Determine safety equipment required.
- Stop the flow if it can be done safely.
- Begin containment and recovery of the spilled materials.

Appropriate spill response gear and materials will be maintained on-site in a vehicle, or where easily accessible and maintained in readiness.

All site personnel will be shown the location of spill response gear and materials during site indoctrination training.

11.0 CONFINED SPACE ENTRY PROCEDURES

11.1 Confined Space Entry

Confined Space Entry tasks are not anticipated as part of this project. A confined space is defined as 1) a space that is large enough and so configured that an employee can bodily enter and perform assigned work and 2) has limited or restricted means for entry or exit, and 3) is not designed for continuous employee occupancy. If required confined space entry will be done in accordance with plant safety procedures and include the use of a confined space entry permit, air monitoring, training, and regional safety equipment to be used. (Appendix I - Confined Space Entry Program)

12.0 SPILL CONTAINMENT PROGRAM

12.1 Spill Response Plan

Spill response will be coordinated with City of Gary environmental personnel. In the event of a spill or a leak site personnel will:

- Inform SHSC immediately.
- Locate the source of the spillage.
- Assess the situation.
- Determine safety equipment required.
- Stop the flow if it can be done safely.
- Begin containment and recovery of the spilled materials.

Appropriate spill response gear and materials will be maintained on-site, in a Baker subcontractor vehicle, or where easily accessible and maintained in readiness.

All site personnel will be shown the location of spill response gear and materials during site indoctrination training.

All decontamination solutions and rinses must be carefully collected and contained in sealable containers for subsequent testing to determine proper disposal procedures.

13.0 HAZARD COMMUNICATION PROGRAM

13.1 Hazard Communication Plan

Hazard communication will be coordinated with City of Gary environmental personnel. All potentially hazardous material either in use as part of the investigation or by the facility in the investigation area will be reviewed and documented with the Baker project manager and City of Gary PM. All personnel will be informed of potentially hazardous materials as part of the required HASP site meetings. Material safety data sheets will be kept on-site as part of the HASP. The Baker Hazard Communication Program is included as Exhibit C.

14.0 HEALTH AND SAFETY PLAN (HASP) REVIEW AND MODIFICATION

This HASP is a "living document". It is intended to reflect the anticipated site conditions during the installation of the Hamilton Standard groundwater hydraulic control and seep collection system activities and the best professional judgement of Baker's health and safety professionals, Project Manager, and other contributing individuals. When the SHSC observes health and safety situations that have not been addressed in this HASP, or the planning appears to be inadequate, the SHSC shall notify the Project Manager for guidance. Best health and safety judgement will be used on site until the problem is resolved and the HASP amended. Amendments will be provided to the Site Manager and the SHSC via telefax (FAX) followed with hard copies sent by mail.

All site personnel will have read this HASP, will have been briefed by the SHSC on its contents, and will be familiar with its provisions. Understanding this HASP and its requirements is certified by each site person signing the Health and Safety Training.

TABLES

TABLE 3-1

CHEMICAL HAZARDS OF CONCERN FOR ALL TASKS
J-PIT REDEVELOPMENT SITE
GARY, INDIANA

Hazardous Substance or Chemical Group	Compounds	Target Organs	Potential Health Effects
Volatile Organic Compounds (VOC)	Acetone Benzene 2-Butanone n-Butyl benzene sec-Butyl benzene cis-1,2-dichloropropane Ethyl benzene 2-Hexanone Isopropyl benzene p-Isopropyl toluene Methylene Chloride Napthalene n-Propyl benzene Tetrachloroethene 1,3,5-Trimethylbenzene 1,2,4-Trimethylbenzene Toluene Xylene	Respiratory System Skin Blood Central Marrow System Bone Marrow Eyes Lungs Liver Kidneys GI tract	Central Nervous System depression, decreased alertness, headache, sleepiness, loss of consciousness Eyes, nose and throat irritation, nausea, vomiting, muscle weakness, staggered gait, mental confusions, coma Benzene suppresses bone marrow function, causing blood changes, chronic exposure could cause leukemia Note: because other aromatic hydrocarbons may be contaminated with benzene during distillation, bezene related health effects should be considered when exposure to any of these agents is suspected
Semi-Volatile Organic Compounds (SVOC)	Bis (2-Ethylhexyl) phthalate Butylbenzylphthalene Chrysene Di-n-Octylphthalate Fluoranthene 2-Methyl naphthalene 3/4-Methyl naphthalene Naphthalene Phenanthrene Phenol Pyrene	Eyes Blood Liver Kidneys Red Blood Cells Central Nervous System Skin	Central Nervous System depression, decreased alertness, headache, sleepiness, loss of consciousness Eyes, nose and throat irriation, nausea, vomiting, muscle weakness, staggered gait, mental confusions, coma Benzene suppresses bone marrow function, causing blood changes, chronic exposure could cause leukemia
Polyaromatic Hydrocarbons (PAH)	Benzo(a)anthrancene Benzo(a)pyrene Benzo(b)fluoranthene Benzo(k)fluoranthene Dibenz(a,h)anthracene	Eyes Blood Liver Kidneys Red Blood Cells Central Nervous System Skin	Note: because other aromatic hydrocarbons may be contaminated with benzene during distillation, benzene related health effects should be considered when exposure to any of these agents i suspected Carcinogen
RCRA Metals	Arsenic Barium Cadmium Chromium Lead Mercury Selenium Silver	Eyes Blood Liver Kidneys Skin	Eyes, nose and throat irritation, nausea, vomiting, muscle weakness, staggered gait, mental confusions, coma

TABLE 3-2

TASK ANALYSIS PHYSICAL HAZARDS OF CONCERN
J-PIT REDEVELOPMENT SITE
GARY, INDIANA

Tasks	Hazard	Description	Prevention/Monitoring Technique
Geoprobe® drilling and construction of monitoring wells, soil and groundwater investigation	Drilling Rig	Pinch points on drill rig	Drilling in teams, with hard hats, safety drilling equipment and tools, boots, exclusion zones (see Appendix C).
	Noise	Excessive noise at rig during drilling activities.	Hearing protection with NRR sufficient to maintain employee exposure below 85 of dBA and/or limit time at drill rig during loud working activities (See Appendix C).
	Fire/Explosion	Combustible gas release potential	Minimize ignition potential in borehole by inserting with dry ice if combustible gases present.
	Electrical	Above and below ground power lines	Obtain utility clearances and maintain safe distances (see Appendix C).
Soil Sampling	Same as above		
Surface Water/Sediment Sampling	Water	Along shoreline and from a boat.	Life preserver and appropriate PPE at all surface water and sediment sampling locations
All Tasks	Slip/Trip/Fall	Mud on wet pavement and drainage ditches	Keep work area clean of mud and debris. Extra caution when workers near ditches.
	Heat Stress	Field work in extreme warm weather	Heat stress prevention and monitoring (see Appendix C).
	Hand and Power Tools	Shovels, wrenches, etc.	Proper usage (see Appendix C).
	Lifting Equipment	Drill cables, etc.	Frequent inspections and proper usage (see Appendix C).

TABLE 3-2 (Continued)

TASK ANALYSIS PHYSICAL HAZARDS OF CONCERN
J-PIT REDEVELOPMENT SITE
GARY INDIANA

Tasks	Hazard	Description	Prevention/Monitoring Technique
	Inclement Weather	Rain, lightening, etc.	Observation and avoidance of extreme conditions (see Appendix C).
	Heavy Manual Lifting	Lifting material and/or equipment	Proper lifting techniques or devices (see Appendix C).
	Cold Stress	Field work in extreme cold weather	Cold stress prevention and monitoring (see Appendix C).
Decontamination	Burn	Excessive heat from steam cleaner	Keep spray pointed down and away from personnel

Note:

Appendix C contains field operating procedures describing additional hazards associated with basic activities such as lifting heavy objects and drill rig operations along with safety procedures for these activities.

TABLE 3-3

TASK ANALYSIS BIOLOGICAL HAZARDS OF CONCERN
J-PIT REDEVELOPMENT SITE
GARY, INDIANA

Task	Hazard	Description	Prevention/Monitoring Technique	Signs and Symptoms	First Aid
All Tasks	Allergic Reaction/ Poisoning	Poisonous plants (i.e., poison ivy)	Recognition and avoidance of hazard. Cover skin completely/wash throughly after possible exposure.	Skin reactions, itching, eye irritation, abnormal breathing and pulse, and headache.	Remove victim from source. Flush affected areas with lots of water, removing clothes with poison on them and caring for shock. Monitor airway, breathing, and circulation (ABC).
	Allergic Reaction/ Poisoning/ Disease	Insects (i.e., mosquitoes, bees)	Cover skin completely/insect repellent/buddy system to observe partner and check for insect presence.	Pain, swelling of the throat, redness or discoloration, itching, hives, decreased consciousness, difficult or noisy breathing and shock.	Remove stinger if possible. Wash with soap and water. Place a cold pack on area to reduce swelling and pain. If you see signs of allergic reactions, call EMS, care for shock and monitor ABCs.
	Bites/ Scratches/ Disease	Stray/wild animals	Buddy system Tetanus shots	Signs of infection or pain or tenderness at the wound; redness; heat or swelling; pus; red streaks leading from the wound, swollen lymph glands, and ill feeling.	Wash wound if no heavy bleeding. Cover with clean dressing bandage and seek medical help. If wound is bleeding heavily, control bleeding and seek medical help.

* At a minimum, training in the recognition of suspected biological hazards will be given in conjunction with the site-specific health and safety training.

TABLE 5-1

ANTICIPATED LEVELS OF PERSONAL PROTECTIVE EQUIPMENT FOR EACH TASK
J-PIT REDEVELOPMENT SITE
GARY, INDIANA

Activity/Task	Level of Protection*	Comments/Additions**
Monitor Well Survey	D	
Geoprobe® Soil and Groundwater Investigation	D	Modified for on-site work
Drilling and construction of monitoring wells	D	Modified for on-site work
Test Pit Investigation	D	Modified for on-site work
Groundwater sampling/well development/aquifer tests	D	
Soil sampling	D	Modified for on-site surficial work and all drilling
Sediment and Surface Water Sampling	D	Modified

- Level C protective gear will be available on site for contingency upgrades during Level D activities. In the event that Level B protective equipment is deemed necessary, all field activities requiring that level of protection will be suspended until the situation can be re-evaluated and appropriate protective gear can be mobilized to the site.
- In the unlikely event that Level A protective equipment is required, all site activities will be suspended and the entire field crew will be demobilized until further notice.
- See Table 7-1 for action levels and potential upgrades.

TABLE 5-2

SPECIFIC COMPONENTS OF LEVELS OF PROTECTION
J-PIT REDEVELOPMENT SITE
GARY, INDIANA

/ X / Level D Tasks:

Tasks at the J-Pit Redevelopment Site which require Level D Protection with a contingency for Level C protection:

Tasks	Protective Equipment
Monitor Well Survey	Work uniform or Tyvek coveralls
	Work gloves (as necessary)
	ANSI-approved safety boots
	Safety glasses
	Hard hat (as necessary for overhead, equipment or bump hazards)
	Earplugs (as necessary)

/ X / Modified Level D Tasks:

Tasks at the J-Pit Redevelopment Site which require modified Level D protection with a contingency for Level C protection:

Tasks	Protective Equipment
Geoprobe® drilling and construction of monitoring wells, excavation of test pits	Saranex coveralls*
	Long cotton underwear or work uniform
Groundwater sampling, well development, and aquifer testing	Surgical inner gloves
	Nitrile outer gloves
Soil and Sediment/Surface Water sampling	ANSI-approved safety boots
	Latex boot covers
	Hard hat (as necessary for overhead, equipment or bump hazards)
	Safety glasses
	Ear plugs (as necessary)
	USCG-approved life vest (for work in boats and near

TABLE 5-2 (Continued)

SPECIFIC COMPONENTS OF LEVELS OF PROTECTION
J-PIT REDEVELOPMENT SITE
GARY, INDIANA

Tasks	Protective Equipment
	ponds)

/ X / Level C Tasks (as contingency):

Tasks	Protective Equipment
Geoprobe® drilling and construction of monitoring wells, excavation of test pits Groundwater sampling, well development, and aquifer testing Soil and Sediment/Surface Water sampling	Full-face APR w/GMC-H cartridge or equivalent Hooded Saranex coveralls Long cotton underwear or work uniform Surgical inner gloves Nitrile outer gloves ANSI-approved safety boots Latex boot covers Hard hat (as necessary for overhead, equipment or bump hazards) Ear plugs (as necessary) USCG-approved life vest (for work in boats and near ponds)

* Tyvek coveralls can be used for surface soil sampling where soils are dry.

TABLE 7-1

AIR MONITORING ACTION LEVELS
ORGANIC GASES AND VAPORS WITHIN BREATHING ZONE
J-PIT REDEVELOPMENT SITE
GARY, INDIANA

Chemical Hazard	Meter	Action Level	Action (Protective Equipment)
Volatile Organic Compounds (VOC)	HNu (11.7eV)	< 5 ppm	Continue in Level D
		≥ 5 ppm for 5 minutes	Upgrade to Level C
		> 25 ppm at any one time	Level B - Stop Work. Perform a survey of the area to identify the source of elevated VOCs.

TABLE 8-1

PERSONNEL/SITE CONTROL REQUIREMENTS BY TASK
J-PIT REDEVELOPMENT SITE
GARY, INDIANA

Task	Buddy System/ Telephone or Radio Communication	Line of Sight	Comments
Survey Monitor Wells	X		NA
Geoprobe® Drilling, Monitoring Well Installation, Test Pit Excavation	X	X	Two drillers present at rig at all times
Groundwater Sample, Well Development, and Aquifer Tests	X		NA
Surface Water/ Sediment Sampling	X	X	Two Sampling personnel
Soil Sampling	X	X	Two drillers present at rig at all times
Any Physically Dangerous Tasks	X	X	NA

NA - Not Applicable

TABLE 8-2

STANDING ORDERS FOR EXCLUSION ZONE
J-PIT REDEVELOPMENT SITE
GARY, INDIANA

No smoking, eating, or drinking on site
No horseplay
No matches or lighters, except in designated areas
Check in at entrance to the site
Check out at exit from the site
Buddy system/line of sight or telephone/radio communication must be in place
Implement the communications system
Wear the appropriate level of protection as defined in the HASP

TABLE 8-3

STANDING ORDERS FOR CONTAMINATION REDUCTION ZONE
J-PIT REDEVELOPMENT SITE
GARY, INDIANA

No smoking, eating, or drinking in this zone
No horseplay
No matches or lighters in this zone
Wear the appropriate level of protection as defined in the HASP

TABLE 9-1

LEVEL C DECONTAMINATION
J-PIT REDEVLOPMENT SITE
GARY, INDIANA

STEP	ZONE
1	Segregated equipment drop
2	Boot cover and glove wash (as necessary)
3	Boot cover and glove rinse (as necessary)
4	Outer garment wash and rinse (as necessary)
5	Tape removal
6	Boot cover removal
7	Outer glove removal
HOT ZONE	
8	Suit removal
9	Face piece removal
10	Inner glove removal
CRZ/SUPPORT ZONE BOUNDARY	
11	Field wash
12	Redress

TABLE 9-2

LEVEL D DECONTAMINATION*
J-PIT REDEVELOPMENT SITE
GARY, INDIANA

STEP	ZONE
1	Segregated equipment drop
2	Boot cover and glove wash (as necessary)
3	Boot cover and glove rinse (as necessary)
4	Boot cover removal
5	Outer glove removal
HOT ZONE	
6	Suit removal
7	Inner glove removal
CRZ/SUPPORT ZONE BOUNDARY	
8	Field wash
9	Redress

*Note: This figure refers to Level D or Modified Level D Decontamination as appropriate. Steps which are not applicable for a given Task will be omitted.

TABLE 10-1

EMERGENCY RECOGNITION/CONTROL MEASURES
J-PIT REDEVLOPMENT SITE
GARY, INDIANA

Hazard	Specific Condition/Location	Prevention/Control
Fire/Explosion	Drill rig or backhoe malfunction	Fire extinguisher at site Segregation of combustibles from ignition sources Daily fire inspections Safety cans (for fuels) if applicable
Air and/or other gaseous release	Boreholes on site Excavation on site	Monitor with PID Excavation routes
Water	Drowning	Wear life preserver and or harness in areas greater than knee deep

TABLE 10-2

EMERGENCY CONTACTS
J-PIT REVEDEVELOPMENT SITE
GARY, INDIANA

Organization	Contact	Telephone Number
Ambulance	Dispatch	911
Fire Department [2]	Dispatch	911
Police Department: City of GaryPolice[1]	Dispatch	911
Methodist Hospital Northlake Campus	Emergency Room	219-886-4000
Poison Control Center	Dispatch	800-222-1222
U.S. EPA National Response Center	Dispatch	800-424-8802
Baker Regional Health and Safety Representative	Rick Spitaler	219-736-0263 Cell Phone: 219-808-8672
Baker Corporate Health & Safety Manager	Ronald Krivan	800-553-1153 412-269-6038
IDEM Emergency Response	Dispatch	317-241-4336

1 Nonemergency police number for City of Gary Police - 219-881-1260.
2 Nonemergency fire number for City of Gary - 219-881-4782.

FIGURES

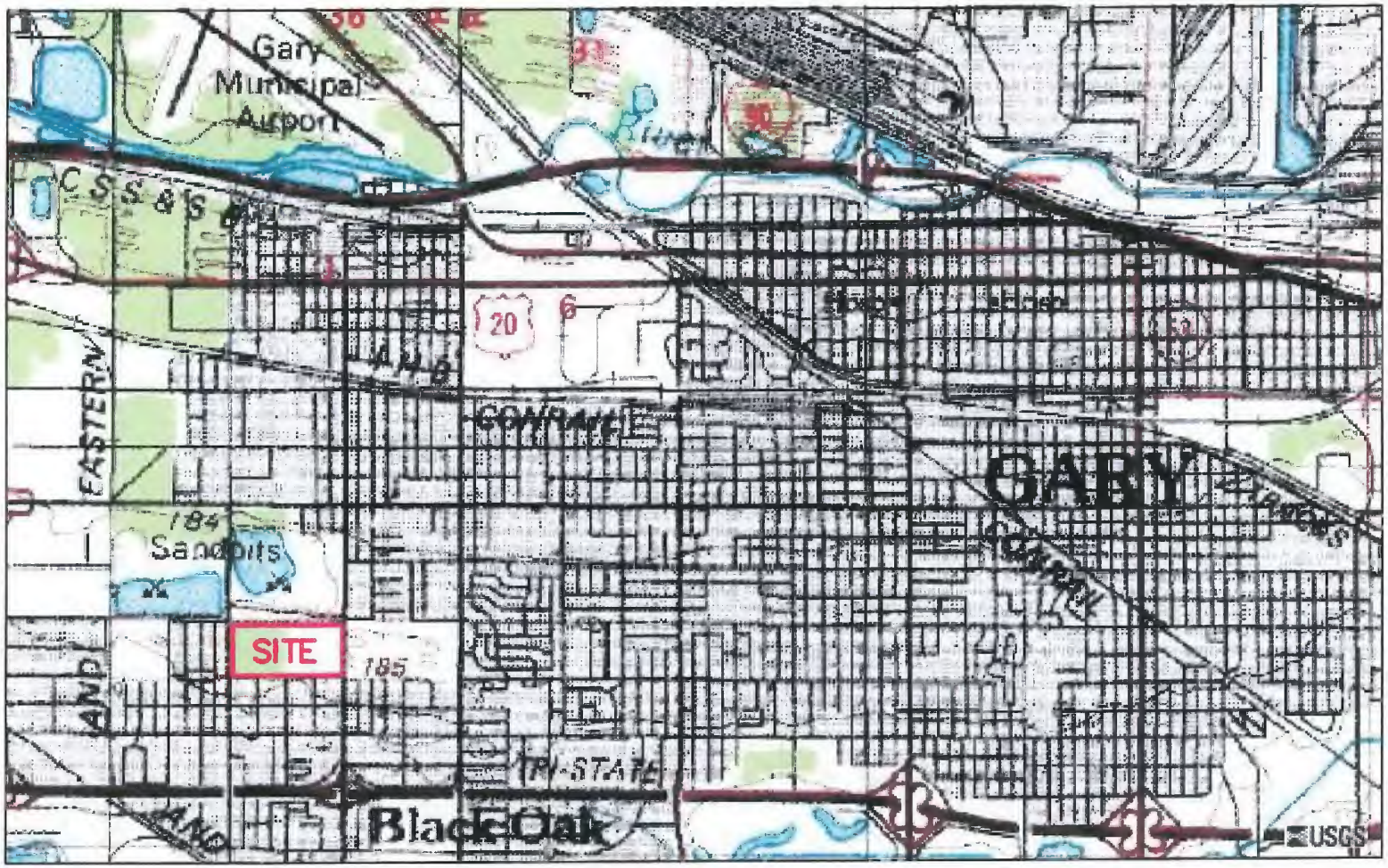

CONTOUR INTERVAL 10 FEET

US GEOLOGICAL SURVEY, JULY 01, 1991

GARY/HIGHLAND QUADRANGLE

APPROX. SCALE:	1" = 45,000'
S.O. No.	25290-000-0000
DATE:	MARCH, 2002
FILE:	25290F01.DWG

FIGURE 3-1. SITE LOCATION MAP
J-PIT REDEVELOPMENT SITE
CITY OF GARY
GARY, INDIANA

Baker

BAKER ENVIRONMENTAL, INC

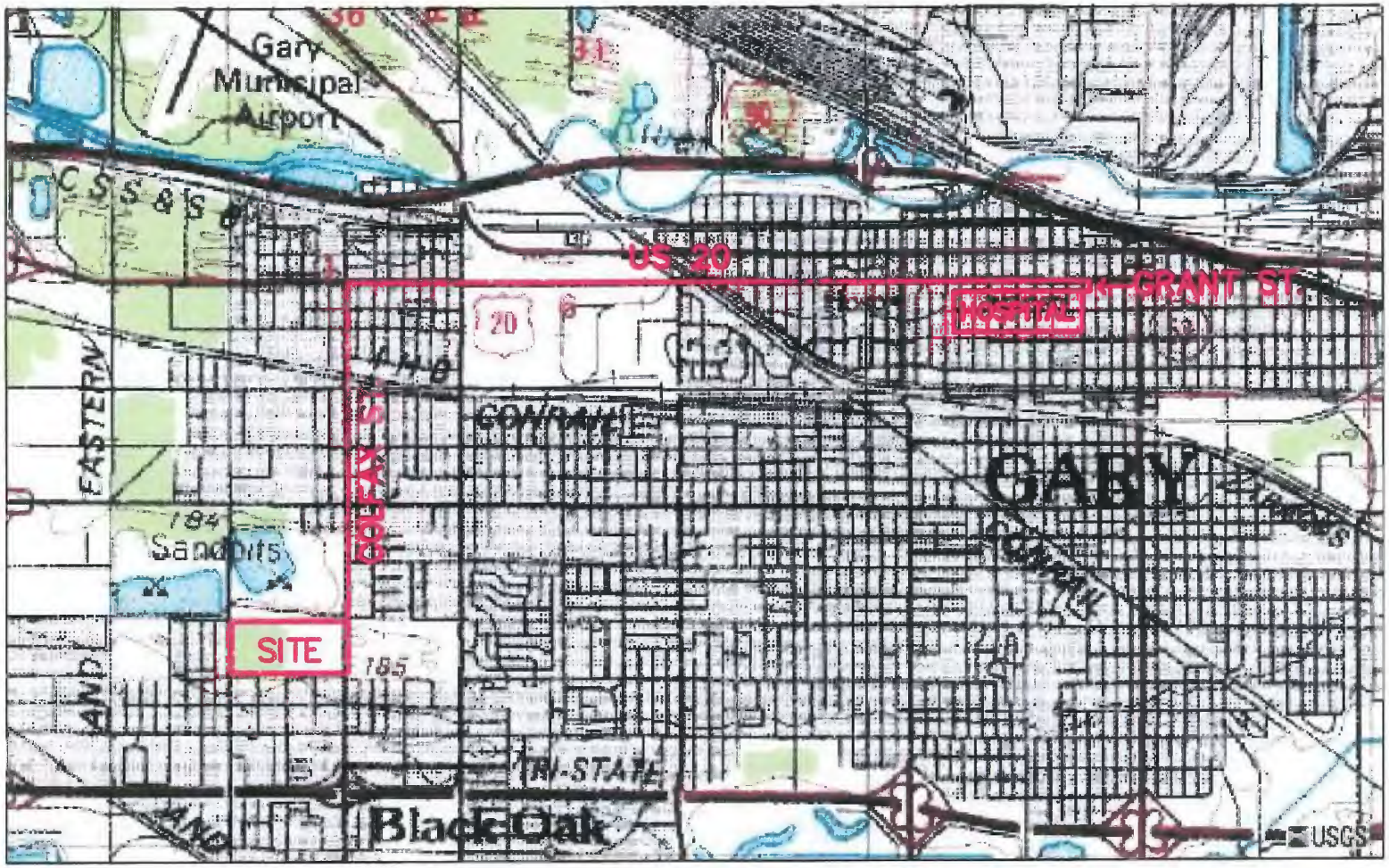

CONTOUR INTERVAL 10 FEET
US GEOLOGICAL SURVEY, JULY 01, 1991
GARY/HIGHLAND QUADRANGLE

APPROX. SCALE:	1" = 45,000'
S.O. No.	25290-000-0000
DATE:	APRIL, 2002
FILE:	25290F02.DWG

FIGURE 10-1. HOSPITAL ROUTE FROM
J-PIT REDEVELOPMENT SITE
CITY OF GARY
GARY, INDIANA

Baker

BAKER ENVIRONMENTAL, INC

EXHIBIT A
Respiratory Protection Program

STANDARD OPERATING PROCEDURES
FOR
RESPIRATORY PROTECTION DEVICES

Cleaning and Disinfecting Air Purifying Respirators (APRs)

APRs in routine use will be cleaned and disinfected at least daily. Where respirators are used occasionally, or when they are in storage, the respirators will be cleaned after each use and thoroughly inspected prior to each subsequent use.

The steps for cleaning and disinfecting APRs daily follow:

- Respirator disassembly. Respirators are taken to a clean location where the filters, cartridges, or canisters are removed; damaged to prevent reuse; and discarded. For thorough cleaning, the inhalation and exhalation valves, speaking diaphragms, and hoses are removed.

- Cleaning. In most instances, the cleaning and disinfecting solution provided by the manufacturer is used, and is dissolved in warm water in an appropriate cleaning container or tub. Using gloves, the respirator is placed in the solution, and swirled for a few moments. A soft brush may be used to clean stubborn soiling.

- Rinsing. The cleaned and disinfected respirators are rinsed thoroughly in clean, warm water to remove all traces of detergent and disinfectant. This step is very important in the prevention of contact dermatitis.

- Drying. Respirators will be air dried on a clean surface. Drying with a soft cloth to remove water spots (particularly around inhalation and exhalation valves and valve seats) is permitted.

- Reassembly and Inspection. Clean, dry respirator facepieces should be re-assembled and inspected in an area separate from the disassembly area to avoid contamination of clean respirators. Special emphasis should be given to inspecting the respirators for detergent of soap residue left by inadequate rinsing. This appears most often on valve seats and can cause valve leakage and/or sticking.

- Don the respirator, and perform negative and positive pressure fit tests.

Storage of Respirators

- Respirators will be stored in clean, secure areas which minimize the chance for contamination or unsanitary conditions. Respirators will be stored in clean, ziplock bags (or equivalent); and will be placed in position that will not distort the facepiece.

- OSHA requires protection from the following elements during storage of respirators:

  - Dust
  - Sunlight
  - Heat
  - Extreme cold
  - Excessive moisture
  - Damaging chemicals
  - Mechanical damage

STANDARD OPERATING PROCEDURES
FOR
PERSONAL PROTECTIVE EQUIPMENT

Inspection

Proper inspection of personal protective equipment (PPE) features several sequences of inspection depending on articles of PPE and it's frequency of use as follows:

- Inspection and operational testing of PPE received from the factory or distributor.
- Inspection of PPE as it is issued to workers.
- Inspection after use or training, and prior to maintenance.
- Periodic inspection of stored equipment.
- Periodic inspection when a question arises concerning the appropriateness of the selected equipment, or when problems with similar equipment arise.

The primary inspection of PPE in use for activities at the site will occur prior to immediate use, will be conducted by the user to ensure that the specific device or article has been checked-out by the user, and that the user is familiar with its use.

Inspection Checklists

For protective clothing before use:

- Determine that the clothing material is correct for the specified task.
- Visually inspect for imperfect seams, non-uniform coating, tears, and malfunctioning closures.
- Hold up to light and check for pinholes.

MEDICAL SURVEILLANCE TESTING PARAMETERS

Complete medical and work histories
Physical examination
Eye examination and visual acuity
EKG (for individuals over 30 years old)
CBC with differential
Chest X-ray (biannual)
Pulmonary Function Tests (FVC and FEV_1)
SMA 20 or 24 (liver enzyme scan)
Audiogram
Urinalysis (glucose scan)

The pre-assignment and annual physical examinations will categorize employees as fit-for-duty and able to wear respiratory protection. The SHSO will compile medical certificates (not results of medical surveillance examinations) as part of the project health and safety records.

All personnel working in contaminated or potentially contaminated work zones will have "passed" a medical examination within the past 12 months. Personnel whose medical certifications expire during the project must pass a medical examination and present a medical certificate to the SHSO before being allowed to work in contaminated or potentially contaminated work zones.

EXHIBIT B
Hazard Communication Program

BAKER ENVIRONMENTAL, INC.
HAZARD COMMUNICATION PROGRAM

TABLE OF CONTENTS

1.0 INTRODUCTION 2
1.1 Purpose 2

2.0 SCOPE 2

3.0 RESPONSIBILITIES 2
3.1 Health and Safety Manager/Health and Safety Coordinator 2
3.2 Project Managers 3
3.3 Site Health and Safety Officers 3
3.4 BEI Equipment Manager 4
3.5 BEI Purchasing Agent 4
3.6 BEI Employees 4

4.0 PROCEDURES 5
4.1 Labeling 5
4.2 Material Safety Data Sheets 6
4.2.1 Location/Availability 6
4.2.2 Content 6
4.3 Information and Training 7
4.3.1 Additional Training 8
4.3.2 Verification 8
4.4 Hazardous Chemicals List 8
4.5 Non-routine Tasks 9
4.6 Trade Secrets 9
4.7 Subcontractor Responsibilities 9
4.8 Client Facilities 10
4.9 Work Site Contractors 10

5.0 STATE PROGRAMS 10

6.0 REFERENCES 10

ATTACHMENTS

A. Manufacturer/Supplier MSDS Request
B. Labeling Example
C. Sample MSDS Format
D. Hazard Communication Training Attendance Record
E. MSDS Glossary
F. Hazard Communication Employee Training Verification Record
G. Hazardous Chemicals List

BAKER ENVIRONMENTAL, INC.
HAZARD COMMUNICATION PROGRAM

1.0 INTRODUCTION

This Hazard Communication Program (Hazcom Program) was developed by Baker Environmental, Inc. (BEI). It applies to all BEI personnel and facilities including the headquarters office and warehouse in Coraopolis, Pennsylvania, Regional Offices in Princeton, New Jersey and Merrillville, Indiana and all field project sites.

1.1 Purpose

The purpose of this program is to comply with the Occupational Safety and Health Administration (OSHA) Hazard Communication Standard (29 CFR 1910.1200 and 1926.59). BEI 's Hazcom Program is intended to provide the means for evaluating hazardous chemicals; conducting information and training sessions for employees on hazardous chemicals; obtaining and reviewing container labeling and other forms of warning; and obtaining and reviewing material safety data sheets (MSDSs). In accordance with OSHA regulations, this program applies only to hazardous chemicals used in the workplace, and not to articles (as defined by the standard) or hazardous waste.

2.0 SCOPE

BEI recognizes that all employees have a right to know the hazards of the chemicals present in their workplace to which they may be exposed under normal working conditions, or in a foreseeable emergency. This Hazcom Program will be reviewed periodically and updated as necessary. BEI is committed to transmitting this information to its employees through this Hazcom Program, labels (and other forms of warning), MSDSs, and information/training.

This Hazcom Program is designed to provide information concerning the health hazards of chemicals encountered during BEI operations, and is intended to be transmitted to BEI employees in a uniform manner. New employees will be notified of the Hazcom Program by Human Resources during their initial training.

Copies of this written Hazcom Program will be maintained by BEI's Health and Safety Manager (HSM) and will be readily accessible to BEI employees. In addition, a copy will remain with the centralized MSDS collection in the Coraopolis office (located in the Equipment Manager's office), Regional Offices, and at appropriate field sites. The written Hazcom Program also will be made available, upon request, to BEI employees and their designated representatives, as well as appropriate government officials as required by OSHA regulations.

3.0 RESPONSIBILITIES

3.1 Health and Safety Manager/Health and Safety Coordinator

BEI's HSM will be responsible for the overall administration of the Hazcom Program. The Health and Safety Coordinator (HSC) will be the primary contact for employees requesting an explanation of any parts of the Hazcom Program.

Additional HSM/HSC responsibilities include:

- Oversight of the procedures outlined under this Hazcom Program.
- Providing guidance and program support to Site Health and Safety Officers.

- Providing Hazcom Program training as necessary, and assisting in the maintenance of training records.
- Making available additional information on hazardous chemicals.
- Periodically reviewing BEI's chemical inventory to assure that it is complete and up to date.
- Periodically reviewing MSDSs for completeness and assisting, as required, the request for additional information or replacement MSDSs as appropriate.
- Providing assistance in determining chemical acquisitions.
- Updating the Hazcom Program as needed.

3.2 Project Managers

Project Managers are responsible for the implementation of this Hazcom Program for all projects involving the use and/or storage of hazardous materials brought onto site, including communicating information to project team members and implementing the requirements of this program applicable to subcontractors (Section 4.7) and client facilities (Section 4.8).

3.3 Site Health and Safety Officers

The Site Health and Safety Officer (SHSO) as identified in a Health and Safety Plan (HASP), is responsible for assisting the Project Manager in implementing the Hazcom Program by conducting the following activities (as appropriate) for field operations:

- Creating Hazardous Chemical Inventories at BEI field sites.
- Maintaining a file of current MSDSs in the BEI field sites.
- Conducting and documenting field training.
- Enforcing labeling requirements in the field.
- Monitoring of the site to determine potential worker exposure.
- Providing information to field employees on their right to receive information regarding hazardous chemicals to which they may be exposed.
- Informing site personnel as to the location and availability of the MSDSs.
- Documenting that subcontractors provide MSDSs for chemical products they may introduce to a BEI field site.
- Reviewing MSDSs for completeness and requesting additional information or replacement MSDSs as appropriate.

3.4 BEI Equipment Manager

BEI's Equipment Manager, and the equivalent personnel in all Regional Offices, is responsible for the following:

- Creating and maintaining the chemical inventory list for field materials used or stored in BEI's office and warehouse.
- Updating MSDS files as new information is received from the manufacturers or suppliers of chemicals.
- Distributing copies of MSDSs, upon request.
- Obtaining copies of MSDSs from chemical manufacturer/supplier's (refer to Attachment A), as needed.
- Assisting field personnel with obtaining appropriate chemical labels for field sites.
- Labeling containers to which hazardous materials are transferred for field use, when the transfer is made by the Equipment Manager.
- Observing containers received from manufacturers or suppliers for consistency with the requirements of this Hazcom Program.
- Reviewing MSDSs for completeness and requesting additional information or replacement MSDSs as appropriate.

3.5 BEI Purchasing Agent

BEI's Purchasing Agent is responsible for the following:

- Approving and issuing purchase orders for all company purchases.
- Monitoring all office chemical purchases to assure that MSDSs are either on file or are requested and received for any new chemical.
- Forwarding a copy of new MSDSs received to the BEI Equipment Manager.
- Maintaining a master copy of all MSDSs.
- Distributing copies of MSDSs, upon request.
- Maintaining/updating the office MSDS binders.

3.6 BEI Employees

All BEI employees are responsible for the following:

- Participating in information/training sessions provided by BEI regarding this Hazcom Program.

- Using only those containers of hazardous materials that are appropriately labeled in accordance with this Hazcom Program.
- Maintaining labels on containers of hazardous materials used by them on field sites.
- Notifying field SHSO, HSM and/or HSC if labels and/or MSDS's are missing.

4.0 PROCEDURES

4.1 Labeling

All hazardous chemicals received from manufacturers/suppliers are to be affixed with a label. This label must not be removed from the container. At a minimum, each label must include the following:

- Identity of the hazardous chemical(s);
- Appropriate hazard warnings; and
- Name and address of the chemical manufacturer, importer, or other responsible party.

Failure of a hazardous chemical to have this information on the label will be cause to refuse the shipment. Where applicable, stationary containers may have signs, placards, or other such written materials in lieu of fixed labels on the containers, as long as the alternative method conveys hazard information.

Portable containers of hazardous chemicals need not be labeled when the substance is transferred from labeled containers which are intended for immediate use (i.e. use of a bucket or other small container with entire contents used at once) of the employee who performs the transfer.

Containers of hazardous chemicals transferred from labeled containers and not intended for the immediate use (i.e. decontamination fluids in squeeze bottles) of the employee performing the transfer shall be labeled. The label on the transfer container shall contain:

- The identity of the hazardous chemical(s) contained therein; and
- The appropriate hazard warnings.

The SHSO will be responsible for labeling all containers used in the field. The Equipment Manager, or equivalent Regional Office personnel, will purchase labels for portable containers and provide them to field personnel, and will affix labels to containers filled at BEI's office or warehouse. Attachment B provides an example of a label that is purchased by the Equipment Manager.

Labels must be able to resist acid and water, and must not conflict with the labeling required by the United States Department of Transportation or Environmental Protection Agency, or state or local regulations.

4.2 Material Safety Data Sheets

4.2.1 Location/Availability

Copies of MSDSs for all hazardous chemicals to which employees of BEI may be exposed will be kept in a 3-ring binder located in the Equipment Manager's Office (chemicals for field use), Purchasing Agent's Office (chemicals for office use), and warehouse for the Coraopolis office, in an equivalent location at each Regional Office, and in a file maintained by the SHSO at each BEI field site for project specific chemicals.

MSDSs will be made available to all BEI employees for review during their work shift, whether in the office or during field operations. If an MSDS cannot be located, the HSM, HSC, Purchasing Agent, or Equipment Manager must be contacted, who in turn will contact the manufacturer for a copy of the MSDS. In the absence of the HSM, HSC, Purchasing Agent, or Equipment Manager, any of the BEI's health and safety support personnel can be contacted. An employee may request a copy of an MSDS at any time through BEI's HSM, HSC, or Equipment Manager. MSDSs will be made available to BEI's subcontractors in accordance with the conditions outlined in Section 4.7.

4.2.2 Content

Though formats may vary from manufacturer to manufacturer (refer to Attachment C) the minimum content for every MSDS will be as follows:

- Identity of the hazardous chemical as it appears on the label; including chemical and common names.
- Manufacturer's name, address, and emergency telephone number.
- Physical and chemical characteristics.
- Physical hazards including the potential for fire, explosion, and reactivity.
- Health hazards including signs and symptoms of exposure and acute and chronic health effects.
- Primary routes of entry into the body.
- The OSHA Permissible Exposure Limit, the American Conference Governmental Industrial Hygienist (ACGIH) Threshold Limit Value, and any other exposure limit used or recommended by the chemical manufacturer, importer, or employer preparing the MSDS, where available.
- Information on whether the chemical is a potential carcinogen.
- Precautionary measures for safe handling and use.
- Applicable control measures including engineering controls, work practice controls, and personal protective equipment.
- Emergency and first aid procedures.

- Spill or leak procedures.
- Waste disposal methods.
- Date of preparation or most recent change; and the name, address, and phone number of the MSDS preparer.

BEI's HSM or HSC will be responsible for reviewing each MSDS for completeness. If an MSDS does not contain the appropriate information, the manufacturer or supplier will be contacted for additional information or a replacement MSDS.

4.3 Information and Training

During the first month of employment, new BEI employees will attend a training session on BEI's Hazcom Program (see Attachment D). Arrangements for this session will be made through BEI's Human Resources Department. The training session will cover the following topics:

- An overview of the requirements contained in the Hazard Communication Standard.
- Hazardous chemicals present in their workplace operations.
- Location and availability of BEI's written Hazcom Program, including BEI's list of hazardous chemicals and corresponding MSDSs for the appropriate office (i.e., the headquarters office or Regional Office locations).
- Methods and observation techniques used to determine the presence or release of hazardous chemicals in the work area.
- Physical and health hazards of the hazardous chemicals
- Specific details of this Hazcom Program including MSDSs, labeling, and how to read labels and review MSDSs to obtain appropriate hazard information, as outlined below.

Material Safety Data Sheets (MSDSs)

- How to read and interpret information on an MSDS.
- The importance of the MSDS.
- Where the MSDSs are located.
- How to obtain an MSDS.
- Information found on an MSDS.
- Definition and terms used on the MSDS (refer to Attachment E).
- Hands-on experience on reading various MSDSs, including the use of trade secrets.

Labels

- Importance of labels
- Information found on the labels
- Using the HMIS code to label a container.

Employees can obtain information regarding BEI's Hazcom Program including a copy of the written program, chemical inventory list, MSDSs or labeling information at any time during their employment by requesting the information through the HSM or HSC. Information will be made available to employee representatives in response to a written request to BEI's HSM or HSC. In addition, BEI will make Hazcom Program information available to authorized government agency representatives in accordance with OSHA's regulations.

4.3.1 Additional Training

More advanced training will be provided for those BEI employees whose routine job performance could result in more direct exposure to hazardous materials, e.g., sampling team personnel. At a minimum, this training may include the following:

- Engineering controls in place and their proper use.
- Administrative controls in place.
- Care and use of Personal Protective Equipment (PPE).
- Function and use of emergency bottles and eyewash stations.
- Locations of first aid kits, fire extinguishers, and emergency air horns.
- Location of emergency phone numbers.
- Methods of detecting chemical releases.

4.3.2 Verification

After attending the training class, each employee will be requested to sign a form to verify that he or she attended the training, received written materials, and understood BEI's Hazcom Program (refer to Attachment F). Before a new hazardous chemical is introduced, or before an employee begins work at a new site, each affected employee will be given appropriate information and training, such as that outlined in the previous section.

4.4 Hazardous Chemicals List

A list of the hazardous chemicals used and/or stored at BEI's office is included as Attachment G. The office location to which this list applies is noted at the top of the list (note: the warehouse chemical inventory for Coraopolis is included with that office list). Each list will be updated by the Equipment Manager, as needed, and annually reviewed by the HSM and/or HSC.

4.5 Non-routine Tasks

Periodically, employees may be required to perform non-routine tasks involving hazardous materials. Before starting work on such projects, each affected employee will be provided information by the HSM or HSC about hazardous chemicals to which the employee may be exposed during such activity. This information will include:

- Specific chemical hazards.
- Protective and safety measures the employee can take.
- Measures BEI has taken to lessen the hazards, including ventilation, respirators, buddy system, and emergency procedures.

4.6 Trade Secrets

Some hazardous chemical suppliers may claim the information requested on an MSDSs is proprietary and not provide the information to the purchaser. When such occurs, the HSM, HSC, Purchasing Agent, or Equipment Manager will contact the supplier to obtain the necessary information to perform a hazard assessment or reject the material for use.

4.7 Subcontractor Responsibilities

In order to comply with BEI's Hazcom Program, all subcontractors who work on BEI projects will be expected to comply with all pertinent sections of OSHA Standard 1910.1200 and 1926.59 as well as the following:

- Subcontractors will be required to submit a copy of the current MSDS for any substance or product covered by the Hazcom Program which will be used on the project site. These MSDSs must be submitted to the SHSO prior to site mobilization. It is the responsibility of BEI's Project Manager to request this information from all applicable subcontractors in conjunction with issuing notice to proceed.
- All containers of hazardous chemicals used on site by a subcontractor must be labeled appropriately and in accordance with the Hazard Communication Standard.
- The subcontractor is responsible for training his/her employees with respect to the applicable provisions of the Hazard Communication Standard.

BEI will provide information to each subcontractor regarding the hazardous materials to which his/her personnel may be exposed during the course of their activities on site. In addition, the subcontractor will be informed of the on-site location of BEI's MSDSs. If requested or if a potential for exposure exists, the subcontractor will be provided with a copy of BEI's hazardous chemicals list for the project site and applicable MSDSs. The subcontractor's employees will be allowed unlimited access these MSDSs, while working on the site.

4.8 Client Facilities

BEI employees are required to request information regarding hazardous chemicals to which they may be exposed while performing services at active client facilities. This information must be requested prior to initiation of on-site activities and should include the chemical inventory list and location of MSDSs. The Project Manager is responsible for making sure the request for information is made and the appropriate information is received and communicated to the project team before work is initiated.

BEI will provide information to clients regarding any hazardous materials brought onto their facility. The client will be informed of the on-site location of Baker's MSDSs. The client will be provided copies of MSDSs upon request.

4.9 Work Site Contractors

BEI will acquire MSDSs from other contractors at a work site if potential for exposure is of concern.

5.0 STATE PROGRAMS

The BEI office in Pennsylvania complies with the Pennsylvania Worker and Community Right To Know Act. This includes the following:

- Complete and have on file a Hazardous Substance Survey Form annually, by April 1, and provide it to the Pennsylvania Department of Labor and Industry, if requested.
- Complete an Environmental Hazard Survey Form, if requested by the Pennsylvania Department of Labor and Industry.
- Provide copies of the Hazardous Substance Survey Form, Environmental Hazard Survey Form, and MSDSs to local emergency response organizations, if requested.

New Jersey and Indiana currently do not have state hazard communication regulatory requirements that effect the BEI regional offices in Princeton and Merrillville. If state regulations are developed that affect these operations the BEI Hazcom Program will be updated, as necessary. Project Managers will review and comply with any specific state requirements when outside of these locations.

6.0 REFERENCES

1. Code of Federal Regulations, 29 CFR 1910.1200 or 1926.59. OSHA's Hazard Communication Standard.

2. OSHA's General Industry Standards. 29 CFR Part 1910 and 1926.

3. *Hazard Communication A Compliance Kit.* U.S. Department of Labor, Occupational Safety and Health Administration. OSHA 3104.

EXHIBIT C
Chemical Hazard Data

MSDS Material Safety Data Sheet

From: Mallinckrodt Baker, Inc.
222 Red School Lane
Phillipsburg, NJ 08865

J.T.Baker

24 Hour Emergency Telephone: 908-859-2151
CHEMTREC: 1-800-424-9300

National Response in Canada
CANUTEC: 613-996-6666

Outside U.S. and Canada
Chemtrec: 703-527-3887

NOTE: CHEMTREC, CANUTEC and National Response Center emergency numbers to be used only in the event of chemical emergencies involving a spill, leak, fire, exposure or accident involving chemicals.

All non-emergency questions should be directed to Customer Service (1-800-582-2537) for assistance.

ARSENIC, 1000 ug/ml (0.10% w/v)

MSDS Number: A7440 --- *Effective Date: 10/31/00*

1. Product Identification

Synonyms: None
CAS No.: 7647-01-0
Molecular Weight: 36.46
Chemical Formula: mostly water
Product Codes: 6919

2. Composition/Information on Ingredients

Ingredient	CAS No	Percent	Hazardous
Arsenic Trioxide	1327-53-3	< 1%	Yes
Hydrogen Chloride	7647-01-0	1 - 2%	Yes
Water	7732-18-5	> 97%	No

3. Hazards Identification

Emergency Overview

DANGER! CORROSIVE. LIQUID AND MIST CAUSE SEVERE BURNS TO ALL BODY TISSUE. MAY BE FATAL IF SWALLOWED OR INHALED. CANCER HAZARD. CONTAINS INORGANIC ARSENIC WHICH CAN CAUSE CANCER.

Risk of cancer depends on duration and level of exposure. MAY CAUSE LIVER AND KIDNEY DAMAGE.

J.T. Baker SAF-T-DATA(tm) Ratings (Provided here for your convenience)

Health Rating: 4 - Extreme (Cancer Causing)
Flammability Rating: 0 - None
Reactivity Rating: 2 - Moderate
Contact Rating: 2 - Moderate
Lab Protective Equip: GOGGLES & SHIELD; LAB COAT & APRON; VENT HOOD; PROPER GLOVES
Storage Color Code: White (Corrosive)

Potential Health Effects

Health hazards given on this data sheet apply to concentrated (5 - 37%) solutions of hydrochloric acid. Hazards of this product are expected to be reduced. Degree of hazard for these reduced concentrations is not currently addressed in the available literature.

Inhalation:
Symptoms are expected to be less severe than exposure to higher concentrations of hydrochloric acid, where symptoms may include irritation to the respiratory tract.
Ingestion:
Symptoms are expected to be less severe than exposure to higher concentrations of hydrochloric acid, where symptoms may include burning sensation, vomiting and diarrhea. Arsenic is highly toxic! May cause burning in esophagus, vomiting, and bloody diarrhea. Symptoms of cold and clammy skin, low blood pressure, weakness, headache, cramps, convulsions, and coma may follow. May cause damage to liver and kidneys. A suspected fetal toxin. Death may occur from circulatory failure. Estimated lethal dose 120 milligrams.
Skin Contact:
Symptoms are expected to be less severe than exposure to higher concentrations of hydrochloric acid, where symptoms may include irritation, redness, pain and burns.
Eye Contact:
Splashes cause irritation. Symptoms are expected to be less severe than exposure to higher concentrations of hydrochloric acid, where symptoms may include severe burns and eye damage.
Chronic Exposure:
Arsenic on repeated or prolonged skin contact may cause bronzing of the skin, edema, dermatitis, and lesions. Repeated or prolonged inhalation of dust may cause damage to the nasal septum. Chronic exposure from inhalation or ingestion may cause hair and weight loss, a garlic odor to the breath and perspiration, excessive salivation and perspiration, central nervous system damage, hepatitis, gastrointestinal disturbances, cardiovascular damage, and kidney and liver damage. Arsenic compounds are known human carcinogens and may be teratogenic based on effects in laboratory animals.
Aggravation of Pre-existing Conditions:
Persons with pre-existing skin disorders, eye disease, or cardiopulmonary diseases may be more susceptible to the effects of this substance.

4. First Aid Measures

First aid procedures given apply to concentrated solutions. Exposures to dilute solutions may not require these extensive first aid procedures.

Inhalation:
Remove to fresh air. If not breathing, give artificial respiration. If breathing is difficult, give oxygen. Get medical attention immediately.

Ingestion:
If swallowed, DO NOT INDUCE VOMITING. Give large quantities of water. Never give anything by mouth to an unconscious person. Get medical attention immediately.

Skin Contact:
Immediately flush skin with plenty of water for at least 15 minutes while removing contaminated clothing and shoes. Get medical attention immediately. Wash clothing before reuse. Thoroughly clean shoes before reuse. Contaminated work clothes should be laundered by individuals who have been informed of the hazards of exposure to this substance.

Eye Contact:
Immediately flush eyes with plenty of water for at least 15 minutes, lifting lower and upper eyelids occasionally. Get medical attention immediately.

Note to Physician:
If emesis if unsuccessful after two doses of Ipecac, consider gastric lavage. Monitor urine arsenic level. Alkalization of urine may help prevent disposition of red cell breakdown products in renal tubular cells. If acute exposure is significant, maintain high urine output and monitor volume status, preferably with central venous pressure line. Abdominal X-rays should be done routinely for all ingestions. Chelation therapy with BAL, followed by n-penicillamine is recommended, but specific dosing guidelines are not clearly established.

---

5. Fire Fighting Measures

Fire:
Not considered to be a fire hazard. May react with metals or heat to release flammable hydrogen gas.

Explosion:
Not considered to be an explosion hazard.

Fire Extinguishing Media:
Water or water spray. Neutralize with soda ash or slaked lime.

Special Information:
In the event of a fire, wear full protective clothing and NIOSH-approved self-contained breathing apparatus with full facepiece operated in the pressure demand or other positive pressure mode. Structural firefighter's protective clothing is ineffective for fires involving hydrochloric acid. Stay away from ends of tanks. Cool tanks with water spray until well after fire is out.

---

6. Accidental Release Measures

Ventilate area of leak or spill. Wear appropriate personal protective equipment as specified in Section 8. Isolate hazard area. Keep unnecessary and unprotected personnel from entering. Contain and recover liquid when possible. Neutralize with alkaline material (soda ash, lime), then absorb with an inert material (e. g., vermiculite, dry sand, earth), and place in a chemical waste container. Do not use combustible materials, such as saw dust. Do not flush to sewer! US Regulations (CERCLA) require reporting spills and releases to soil, water and air in excess of reportable quantities. The toll free number for the US Coast Guard National Response Center is (800) 424-8802.

J. T. Baker NEUTRASORB(R) or TEAM(R) 'Low Na+' acid neutralizers are recommended for spills of this product.

---

7. Handling and Storage

Keep in a tightly closed container, stored in a cool, dry, ventilated area. Protect against physical damage. Protect from freezing. Isolate from incompatible substances. Wear special protective equipment (Sec. 8) for maintenance break-in or where exposures may exceed established exposure levels. Wash hands, face, forearms and neck when exiting restricted areas. Shower, dispose of outer clothing, change to clean garments at the end of the day. Avoid cross-contamination of street clothes. Wash hands before eating and do not eat, drink, or smoke in workplace. Containers of this material may be hazardous when empty since they retain product residues (vapors, liquid); observe all warnings and precautions listed for the product.

---

8. Exposure Controls/Personal Protection

Airborne Exposure Limits:
For Hydrochloric acid:
- OSHA Permissible Exposure Limit (PEL):
5 ppm (Ceiling)
- ACGIH Threshold Limit Value (TLV):
5 ppm (STEL/Ceiling)

For Inorganic Arsenic compounds (as As):
- OSHA Permissible Exposure Limit (PEL):
10 ug/m3 (TWA), 5 ug/m3(Action Level), cancer hazard.
- ACGIH Threshold Limit Value (TLV):
0.01 mg/m3 (TWA), A1, confirmed human carcinogen.
Ventilation System:
A system of local and/or general exhaust is recommended to keep employee exposures below the Airborne Exposure Limits. Local exhaust ventilation is generally preferred because it can control the emissions of the contaminant at its source, preventing dispersion of it into the general work area. Please refer to the ACGIH document, *Industrial Ventilation, A Manual of Recommended Practices*, most recent edition, for details.
Personal Respirators (NIOSH Approved):
If the exposure limit is exceeded, a half-face respirator with an acid gas cartridge may be

worn for up to ten times the exposure limit or the maximum use concentration specified by the appropriate regulatory agency or respirator supplier, whichever is lowest. A full-face piece respirator with an acid gas cartridge may be worn up to 50 times the exposure limit, or the maximum use concentration specified by the appropriate regulatory agency, or respirator supplier, whichever is lowest. For emergencies or instances where the exposure levels are not known, use a full-facepiece positive-pressure, air-supplied respirator. WARNING: Air-purifying respirators do not protect workers in oxygen-deficient atmospheres.

Skin Protection:
Wear impervious protective clothing, including boots, gloves, lab coat, apron or coveralls, as appropriate, to prevent skin contact.

Eye Protection:
Use chemical safety goggles and/or a full face shield where splashing is possible. Maintain eye wash fountain and quick-drench facilities in work area.

Other Control Measures:
Any area where inorganic arsenic is stored, handled, used, etc., must be established as a 'Regulated Area' with controlled access, limited to authorized persons. Containers of inorganic arsenic and Regulated Areas must be labeled to show a CANCER SUSPECT AGENT is present. Eating, drinking, and smoking should not be permitted in areas where solids or liquids containing arsenic or lead compounds are handled, processed, or stored. See OSHA substance-specific standard for more information on personal protective equipment, engineering and work practice controls, medical surveillance, record keeping, and reporting requirements. (arsenic: 29 CFR 1910 .1018; lead: 29 CFR 1910.1025).

---

9. Physical and Chemical Properties

Appearance:
Clear, colorless solution.

Odor:
Odorless.

Solubility:
Infinitely soluble.

Specific Gravity:
ca. 1

pH:
No information found.

% Volatiles by volume @ 21C (70F):
> 99

Boiling Point:
ca. 100C (ca. 212F)

Melting Point:
ca. 0C (ca. 32F)

Vapor Density (Air=1):
Essentially the same as water. Not applicable.

Vapor Pressure (mm Hg):
Essentially the same as water.

Evaporation Rate (BuAc=1):
Essentially the same as water.

10. Stability and Reactivity

Stability:
Stable under ordinary conditions of use and storage.
Hazardous Decomposition Products:
When heated to decomposition, emits toxic hydrogen chloride fumes and will react with water or steam to produce heat and toxic and corrosive fumes. Thermal oxidative decomposition produces toxic chlorine fumes and explosive hydrogen gas. Emits toxic fumes of arsenic when heated to decomposition.
Hazardous Polymerization:
Will not occur.
Incompatibilities:
A strong mineral acid, concentrated hydrochloric acid is highly reactive with strong bases, metals, metal oxides, hydroxides, amines, carbonates and other alkaline materials. Incompatible with materials such as cyanides, sulfides, sulfites, and formaldehyde.
Conditions to Avoid:
Heat, direct sunlight, incompatibles.

11. Toxicological Information

Toxicological Data:
Hydrochloric acid: Inhalation rat LC50: 3124 ppm/1H; Oral rabbit LD50: 900 mg/kg. Investigated as a tumorigen, mutagen, reproductive effector. Arsenic trioxide: oral rat LD50: 14.6 mg/kg; investigated as a mutagen, tumorigen, reproductive effector.
Carcinogenicity:
For arsenic and inorganic arsenic compounds:
Regulated by OSHA as a carcinogen.
EPA / IRIS classification: Group A - Known human carcinogen.

--------\Cancer Lists\----------

Ingredient	---NTP Carcinogen--- Known	Anticipated	IARC Category
Arsenic Trioxide (1327-53-3)	Yes	No	1
Hydrogen Chloride (7647-01-0)	No	No	3
Water (7732-18-5)	No	No	None

12. Ecological Information

Environmental Fate:
For Hydrochloric Acid (Concentrated Solutions):
When released into the soil, this material is not expected to biodegrade. When released into the soil, this material may leach into groundwater.
Environmental Toxicity:

For Hydrochloric Acid (Concentrated Solutions):
This material may be toxic to aquatic life. LC50 Shrimp: 100-300 ppm/48-hr/salt water; LC100 trout: 10 mg/l/24-hr; TLm mosquito fish: 282 ppm/96-hr.

---

13. Disposal Considerations

Whatever cannot be saved for recovery or recycling should be handled as hazardous waste and sent to a RCRA approved waste facility. Processing, use or contamination of this product may change the waste management options. State and local disposal regulations may differ from federal disposal regulations. Dispose of container and unused contents in accordance with federal, state and local requirements.

---

14. Transport Information

Domestic (Land, D.O.T.)

Proper Shipping Name: CORROSIVE LIQUID, ACIDIC, INORGANIC, N.O.S. (HYDROGEN CHLORIDE)
Hazard Class: 8
UN/NA: UN3264
Packing Group: III
Information reported for product/size: 500ML

International (Water, I.M.O.)

Proper Shipping Name: CORROSIVE LIQUID, ACIDIC, INORGANIC, N.O.S. (HYDROGEN CHLORIDE)
Hazard Class: 8
UN/NA: UN3264
Packing Group: III
Information reported for product/size: 500ML

International (Air, I.C.A.O.)

Proper Shipping Name: CORROSIVE LIQUID, ACIDIC, INORGANIC, N.O.S. (HYDROGEN CHLORIDE)
Hazard Class: 8
UN/NA: UN3264
Packing Group: III
Information reported for product/size: 500ML

---

15. Regulatory Information

--------\Chemical Inventory Status - Part 1\--------

Ingredient	TSCA	EC	Japan	Australia
Arsenic Trioxide (1327-53-3)	Yes	Yes	Yes	Yes
Hydrogen Chloride (7647-01-0)	Yes	Yes	Yes	Yes
Water (7732-18-5)	Yes	Yes	Yes	Yes

--------\Chemical Inventory Status - Part 2\--------

Ingredient	Korea	--Canada-- DSL	NDSL	Phil.
Arsenic Trioxide (1327-53-3)	Yes	Yes	No	Yes
Hydrogen Chloride (7647-01-0)	Yes	Yes	No	Yes
Water (7732-18-5)	Yes	Yes	No	Yes

--------\Federal, State & International Regulations - Part 1\--------

Ingredient	-SARA 302- RQ	TPQ	------SARA 313------ List	Chemical Catg.
Arsenic Trioxide (1327-53-3)	1	100*	No	Arsenic comp
Hydrogen Chloride (7647-01-0)	5000	500*	Yes	No
Water (7732-18-5)	No	No	No	No

--------\Federal, State & International Regulations - Part 2\--------

Ingredient	CERCLA	-RCRA- 261.33	-TSCA- 8(d)
Arsenic Trioxide (1327-53-3)	1	P012	No
Hydrogen Chloride (7647-01-0)	5000	No	No
Water (7732-18-5)	No	No	No

Chemical Weapons Convention: No TSCA 12(b): No CDTA: No
SARA 311/312: Acute: Yes Chronic: Yes Fire: No Pressure: No
Reactivity: No (Mixture / Liquid)

WARNING:
THIS PRODUCT CONTAINS CHEMICALS KNOWN TO THE STATE OF CALIFORNIA TO CAUSE CANCER AND BIRTH DEFECTS OR OTHER REPRODUCTIVE HARM.

Australian Hazchem Code: No information found.
Poison Schedule: S6
WHMIS:
This MSDS has been prepared according to the hazard criteria of the Controlled Products Regulations (CPR) and the MSDS contains all of the information required by the CPR.

---

16. Other Information

NFPA Ratings: Health: **2** Flammability: **0** Reactivity: **0**
Label Hazard Warning:
DANGER! CORROSIVE. LIQUID AND MIST CAUSE SEVERE BURNS TO ALL BODY TISSUE. MAY BE FATAL IF SWALLOWED OR INHALED. CANCER

HAZARD. CONTAINS INORGANIC ARSENIC WHICH CAN CAUSE CANCER. Risk of cancer depends on duration and level of exposure. MAY CAUSE LIVER AND KIDNEY DAMAGE.

Label Precautions:

Do not get in eyes, on skin, or on clothing.
Do not breathe mist.
Keep container closed.
Use only with adequate ventilation.
Wash thoroughly after handling.

Label First Aid:

In case of contact, immediately flush eyes or skin with plenty of water for at least 15 minutes while removing contaminated clothing and shoes. Wash clothing before reuse. If inhaled, remove to fresh air. If not breathing, give artificial respiration. If breathing is difficult, give oxygen. If swallowed, DO NOT INDUCE VOMITING. Give large quantities of water. Never give anything by mouth to an unconscious person. In all cases get medical attention immediately.

Product Use:

Laboratory Reagent.

Revision Information:

No changes.

Disclaimer:

****

Mallinckrodt Baker, Inc. provides the information contained herein in good faith but makes no representation as to its comprehensiveness or accuracy. This document is intended only as a guide to the appropriate precautionary handling of the material by a properly trained person using this product. Individuals receiving the information must exercise their independent judgment in determining its appropriateness for a particular purpose. MALLINCKRODT BAKER, INC. MAKES NO REPRESENTATIONS OR WARRANTIES, EITHER EXPRESS OR IMPLIED, INCLUDING WITHOUT LIMITATION ANY WARRANTIES OF MERCHANTABILITY, FITNESS FOR A PARTICULAR PURPOSE WITH RESPECT TO THE INFORMATION SET FORTH HEREIN OR THE PRODUCT TO WHICH THE INFORMATION REFERS. ACCORDINGLY, MALLINCKRODT BAKER, INC. WILL NOT BE RESPONSIBLE FOR DAMAGES RESULTING FROM USE OF OR RELIANCE UPON THIS INFORMATION.

****

Prepared by: Strategic Services Division
Phone Number: (314) 539-1600 (U.S.A.)

LEAD, 1,000 ug/mL or 10,000 ug/mL

MSDS Number: L2353 --- ***Effective Date: 11/02/01***

1. Product Identification

Synonyms: None
CAS No.: Not applicable to mixtures.
Molecular Weight: Not applicable to mixtures.
Chemical Formula: Not applicable. (> 95% water)
5732, 5765, 6455

2. Composition/Information on Ingredients

Ingredient	CAS No	Percent	Hazardous
Nitric Acid	7697-37-2	< 4%	Yes
Lead	7439-92-1	0.1 - 1%	Yes
Water	7732-18-5	> 95%	No

3. Hazards Identification

Emergency Overview

DANGER! CORROSIVE! LIQUID AND MIST CAUSE SEVERE BURNS TO EVERY AREA OF CONTACT. VAPOR IRRITATING TO EYES AND RESPIRATORY TRACT. MAY BE FATAL IF SWALLOWED OR INHALED. MAY

AFFECT THE GUM TISSUE, CENTRAL NERVOUS SYSTEM, KIDNEYS, BLOOD, REPRODUCTIVE SYSTEM, AND RESPIRATORY TRACT (Lead component). INHALATION MAY CAUSE LUNG AND TOOTH DAMAGE.

J.T. Baker SAF-T-DATA(tm) Ratings (Provided here for your convenience)

Health Rating: 3 - Severe (Life)
Flammability Rating: 0 - None
Reactivity Rating: 1 - Slight
Contact Rating: 3 - Severe (Corrosive)
Lab Protective Equip: GOGGLES & SHIELD; LAB COAT & APRON; VENT HOOD; PROPER GLOVES
Storage Color Code: White (Corrosive)

Potential Health Effects

Nitric acid is extremely hazardous; it is corrosive, reactive, an oxidizer, and a poison. The following hazards are for concentrated solutions. Hazards of less concentrated solutions may be reduced. Degree of hazard for reduced concentrations is not currently addressed in the available literature.

Inhalation:
Corrosive. Effects should be less severe than from exposure to higher concentrations where symptoms may include irritation of the nose and throat, labored breathing, as well as lung edema, damage to the mucous membranes and upper respiratory tract.
Ingestion:
Corrosive. Effects should be less severe than from exposure to higher concentrations where symptoms may include severe burns of the mouth, throat, and stomach. May cause sore throat, vomiting, diarrhea. The symptoms of lead poisoning include abdominal pain and spasms, nausea, vomiting, headache. Acute poisoning can lead to muscle weakness, "lead line" on the gums, metallic taste, definite loss of appetite, insomnia, dizziness, high lead levels in blood and urine with shock, coma and death in extreme cases.
Skin Contact:
Corrosive. Effects should be less severe than from exposure to higher concentrations where symptoms may include redness, pain, and burns to the skin.
Eye Contact:
Corrosive. Effects should be less severe than from exposure to higher concentrations where symptoms may include blurred vision, redness, pain, and burns to eye tissue and possible permanent eye damage.
Chronic Exposure:
Lead is a cumulative poison and exposure even to small amounts can raise the body's content to toxic levels. The symptoms of chronic exposure are like those of ingestion poisoning; restlessness, irritability, visual disturbances, hypertension and gray facial color may also be noted. Long-term exposure to concentrated vapors may cause erosion of teeth and lung damage. Long-term exposures seldom occur due to the corrosive properties of the acid.
Aggravation of Pre-existing Conditions:
Persons with pre-existing skin disorders, eye disease, or cardiopulmonary diseases may be more susceptible to the effects of this substance.

4. First Aid Measures

Immediate first aid treatment reduces the health effects of this substance.
Inhalation:
Remove to fresh air. If not breathing, give artificial respiration. If breathing is difficult, give oxygen. Get medical attention immediately.
Ingestion:
If swallowed, DO NOT INDUCE VOMITING. Give large quantities of water. Never give anything by mouth to an unconscious person. Get medical attention immediately.
Skin Contact:
Immediately flush skin with plenty of water for at least 15 minutes while removing contaminated clothing and shoes. Get medical attention immediately. Wash clothing before reuse. Thoroughly clean shoes before reuse.
Eye Contact:
Immediately flush eyes with plenty of water for at least 15 minutes, lifting lower and upper eyelids occasionally. Get medical attention immediately.

5. Fire Fighting Measures

Fire:
Not combustible, but concentrated material is a strong oxidizer and its heat of reaction with reducing agents or combustibles may cause ignition.
Explosion:
Concentrated material reacts explosively with combustible organic or readily oxidizable materials such as: alcohols, turpentine, charcoal, organic refuse, metal powder, hydrogen sulfide, etc. Reacts with most metals to release hydrogen gas which can form explosive mixtures with air.
Fire Extinguishing Media:
Use any means suitable for extinguishing surrounding fire.
Special Information:
In the event of a fire, wear full protective clothing and NIOSH-approved self-contained breathing apparatus with full facepiece operated in the pressure demand or other positive pressure mode.

6. Accidental Release Measures

Ventilate area of leak or spill. Wear appropriate personal protective equipment as specified in Section 8. Isolate hazard area. Keep unnecessary and unprotected personnel from entering. Contain and recover liquid when possible. Neutralize with alkaline material (soda ash, lime), then absorb with an inert material (e. g., vermiculite, dry sand, earth), and place in a chemical waste container. Do not use combustible materials, such as saw dust. Do not flush to sewer!

J. T. Baker NEUTRASORB® or TEAM® 'Low Na+' acid neutralizers are recommended for spills of this product.

---

7. Handling and Storage

Store in a cool, dry, ventilated storage area with acid resistant floors and good drainage. Protect from physical damage. Keep out of direct sunlight and away from heat, water, and incompatible materials. Do not wash out container and use it for other purposes. When diluting, the acid should always be added slowly to water and in small amounts. Never use hot water and never add water to the acid. Water added to acid can cause uncontrolled boiling and splashing. Containers of this material may be hazardous when empty since they retain product residues (vapors, liquid); observe all warnings and precautions listed for the product.

---

8. Exposure Controls/Personal Protection

Airborne Exposure Limits:
- OSHA Permissible Exposure Limit (PEL) -
Nitric Acid: 2 ppm (TWA),
Lead: 0.05 mg/m3 (TWA), 0.03 mg/m3 (Action Level).

- ACGIH Threshold Limit Value (TLV) -
Nitric Acid: 2 ppm (TWA), 4 ppm (STEL),
Lead: 0.05 mg/m3 (TWA), A3 - Animal carcinogen.

Ventilation System:
A system of local and/or general exhaust is recommended to keep employee exposures below the Airborne Exposure Limits. Local exhaust ventilation is generally preferred because it can control the emissions of the contaminant at its source, preventing dispersion of it into the general work area. Please refer to the ACGIH document, *Industrial Ventilation, A Manual of Recommended Practices*, most recent edition, for details.

Personal Respirators (NIOSH Approved):
If the exposure limit is exceeded and engineering controls are not feasible, wear a supplied air, full-facepiece respirator, airlined hood, or full-facepiece self-contained breathing apparatus. Breathing air quality must meet the requirements of the OSHA respiratory protection standard (29CFR1910.134). Canister-type respirators using sorbents are ineffective.

Skin Protection:
Rubber or neoprene gloves and additional protection including impervious boots, apron, or coveralls, as needed in areas of unusual exposure to prevent skin contact.

Eye Protection:
Use chemical safety goggles and/or a full face shield where splashing is possible. Maintain eye wash fountain and quick-drench facilities in work area.

Other Control Measures:
Eating, drinking, and smoking should not be permitted in areas where solids or liquids containing lead compounds are handled, processed, or stored. See OSHA substance-specific standard for more information on personal protective equipment, engineering and work

practice controls, medical surveillance, record keeping, and reporting requirements. (29 CFR 1910.1025).

---

9. Physical and Chemical Properties

Appearance:
Clear, colorless solution.
Odor:
Odorless.
Solubility:
Infinitely soluble.
Specific Gravity:
ca. 1.0
pH:
No information found.
% Volatiles by volume @ 21C (70F):
99
Boiling Point:
ca. 100C (ca. 212F)
Melting Point:
ca. 0C (ca. 32F)
Vapor Density (Air=1):
Essentially the same as water.
Vapor Pressure (mm Hg):
Essentially the same as water.
Evaporation Rate (BuAc=1):
Essentially the same as water.

---

10. Stability and Reactivity

Stability:
Stable under ordinary conditions of use and storage.
Hazardous Decomposition Products:
Toxic metal fumes may form when heated to decomposition.
Hazardous Polymerization:
Will not occur.
Incompatibilities:
A dangerously powerful oxidizing agent, concentrated nitric acid is incompatible with most substances, especially strong bases, metallic powders, carbides, hydrogen sulfide, turpentine, and combustible organics.
Conditions to Avoid:
Incompatibles.

---

11. Toxicological Information

Toxicological Data:
For nitric acid: Investigated as a mutagen, reproductive effector.
Reproductive Toxicity:
Lead and other smelter emissions are human reproductive hazards. (Chemical Council on Environmental Quality; Chemical Hazards to Human Reproduction, 1981).
Carcinogenicity:
For lead and inorganic lead compounds:
EPA / IRIS classification: Group B2 - Probable human carcinogen, sufficient animal evidence.

--------\Cancer Lists\----------

Ingredient	---NTP Carcinogen--- Known	Anticipated	IARC Category
Nitric Acid (7697-37-2)	No	No	None
Lead (7439-92-1)	No	No	2B
Water (7732-18-5)	No	No	None

12. Ecological Information

Environmental Fate:
No information found.
Environmental Toxicity:
No information found.

13. Disposal Considerations

Whatever cannot be saved for recovery or recycling should be handled as hazardous waste and sent to a RCRA approved incinerator or disposed in a RCRA approved waste facility. Processing, use or contamination of this product may change the waste management options. State and local disposal regulations may differ from federal disposal regulations. Dispose of container and unused contents in accordance with federal, state and local requirements.

14. Transport Information

Domestic (Land, D.O.T.)

Proper Shipping Name: CORROSIVE LIQUID, ACIDIC, INORGANIC, N.O.S. (NITRIC ACID)
Hazard Class: 8

UN/NA: UN3264
Packing Group: III
Information reported for product/size: 500ML

International (Water, I.M.O.)

Proper Shipping Name: CORROSIVE LIQUID, ACIDIC, INORGANIC, N.O.S. (NITRIC ACID)
Hazard Class: 8
UN/NA: UN3264
Packing Group: III
Information reported for product/size: 500ML

International (Air, I.C.A.O.)

Proper Shipping Name: CORROSIVE LIQUID, ACIDIC, INORGANIC, N.O.S. (NITRIC ACID)
Hazard Class: 8
UN/NA: UN3264
Packing Group: III
Information reported for product/size: 500ML

---

15. Regulatory Information

--------\Chemical Inventory Status - Part 1\--------

Ingredient	TSCA	EC	Japan	Australia
Nitric Acid (7697-37-2)	Yes	Yes	Yes	Yes
Lead (7439-92-1)	Yes	Yes	Yes	Yes
Water (7732-18-5)	Yes	Yes	Yes	Yes

--------\Chemical Inventory Status - Part 2\--------

Ingredient	Korea	--Canada-- DSL	NDSL	Phil.
Nitric Acid (7697-37-2)	Yes	Yes	No	Yes
Lead (7439-92-1)	Yes	Yes	No	Yes
Water (7732-18-5)	Yes	Yes	No	Yes

--------\Federal, State & International Regulations - Part 1\--------

Ingredient	-SARA 302- RQ	TPQ	------SARA 313------ List	Chemical Catg.
Nitric Acid (7697-37-2)	1000	1000	Yes	No
Lead (7439-92-1)	No	No	Yes	No
Water (7732-18-5)	No	No	No	No

--------\Federal, State & International Regulations - Part 2\--------

Ingredient	CERCLA	-RCRA- 261.33	-TSCA- 8(d)
Nitric Acid (7697-37-2)	1000	No	No
Lead (7439-92-1)	10	No	No

Water (7732-18-5)	No	No	No

Chemical Weapons Convention: No TSCA 12(b): No CDTA: No
SARA 311/312: Acute: Yes Chronic: Yes Fire: No Pressure: No
Reactivity: No (Mixture / Liquid)

WARNING:
THIS PRODUCT CONTAINS CHEMICALS KNOWN TO THE STATE OF CALIFORNIA TO CAUSE CANCER AND BIRTH DEFECTS OR OTHER REPRODUCTIVE HARM.

Australian Hazchem Code: 2R
Poison Schedule: No information found.
WHMIS:
This MSDS has been prepared according to the hazard criteria of the Controlled Products Regulations (CPR) and the MSDS contains all of the information required by the CPR.

---

16. Other Information

NFPA Ratings: Health: **3** Flammability: **0** Reactivity: **0**
Label Hazard Warning:
DANGER! CORROSIVE! LIQUID AND MIST CAUSE SEVERE BURNS TO EVERY AREA OF CONTACT. VAPOR IRRITATING TO EYES AND RESPIRATORY TRACT. MAY BE FATAL IF SWALLOWED OR INHALED. MAY AFFECT THE GUM TISSUE, CENTRAL NERVOUS SYSTEM, KIDNEYS, BLOOD, REPRODUCTIVE SYSTEM, AND RESPIRATORY TRACT (Lead component). INHALATION MAY CAUSE LUNG AND TOOTH DAMAGE.
Label Precautions:
Do not get in eyes, on skin, or on clothing.
Do not breathe vapor or mist.
Keep container closed.
Use only with adequate ventilation.
Wash thoroughly after handling.
Label First Aid:
In case of contact, immediately flush eyes or skin with plenty of water for at least 15 minutes while removing contaminated clothing and shoes. Wash clothing before reuse. If swallowed, DO NOT INDUCE VOMITING. Give large quantities of water. Never give anything by mouth to an unconscious person. If inhaled, remove to fresh air. If not breathing, give artificial respiration. If breathing is difficult, give oxygen. In all cases get medical attention immediately.
Product Use:
Laboratory Reagent.
Revision Information:
MSDS Section(s) changed since last revision of document include: 8.
Disclaimer:
****

Mallinckrodt Baker, Inc. provides the information contained herein in good faith but

makes no representation as to its comprehensiveness or accuracy. This document is intended only as a guide to the appropriate precautionary handling of the material by a properly trained person using this product. Individuals receiving the information must exercise their independent judgment in determining its appropriateness for a particular purpose. MALLINCKRODT BAKER, INC. MAKES NO REPRESENTATIONS OR WARRANTIES, EITHER EXPRESS OR IMPLIED, INCLUDING WITHOUT LIMITATION ANY WARRANTIES OF MERCHANTABILITY, FITNESS FOR A PARTICULAR PURPOSE WITH RESPECT TO THE INFORMATION SET FORTH HEREIN OR THE PRODUCT TO WHICH THE INFORMATION REFERS. ACCORDINGLY, MALLINCKRODT BAKER, INC. WILL NOT BE RESPONSIBLE FOR DAMAGES RESULTING FROM USE OF OR RELIANCE UPON THIS INFORMATION.
****

Prepared by: Environmental Health & Safety
Phone Number: (314) 654-1600 (U.S.A.)

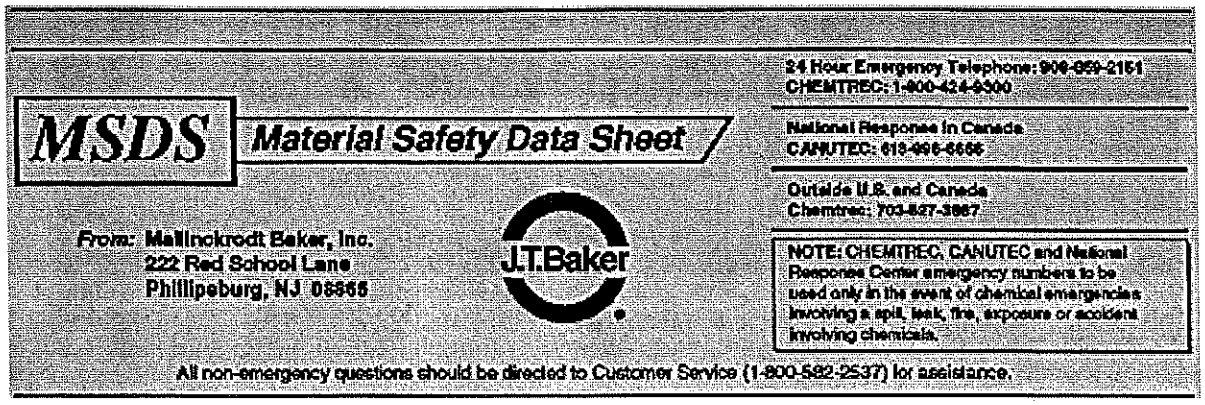

CADMIUM, 1000 ug/mL (0.10% w/v)

MSDS Number: C0070 --- ***Effective Date: 09/14/00***

1. Product Identification

Synonyms: Atomic Absorption Standard
CAS No.: Not applicable to mixtures.
Molecular Weight: Not applicable to mixtures.
Chemical Formula: Cd and HNO3 in H2O
Product Codes: 6924

2. Composition/Information on Ingredients

Ingredient	CAS No	Percent	Hazardous
Cadmium	7440-43-9	< 1%	Yes
Nitric Acid	7697-37-2	1 - 2%	Yes
Water	7732-18-5	97 - 98%	No

3. Hazards Identification

Emergency Overview

DANGER! CORROSIVE. LIQUID AND MIST CAUSE SEVERE BURNS TO ALL BODY TISSUE. MAY BE FATAL IF SWALLOWED OR INHALED. VAPOR IRRITATING TO EYES AND RESPIRATORY TRACT. INHALATION MAY

CAUSE LUNG AND TOOTH DAMAGE. MAY AFFECT RESPIRATORY SYSTEM, KIDNEYS, PROSTATE, AND BLOOD. CANCER HAZARD. CAN CAUSE CANCER. Risk of cancer depends on duration and level of exposure.

J.T. Baker SAF-T-DATA(tm) Ratings (Provided here for your convenience)

Health Rating: 3 - Severe (Cancer Causing)
Flammability Rating: 0 - None
Reactivity Rating: 1 - Slight
Contact Rating: 3 - Severe (Corrosive)
Lab Protective Equip: GOGGLES & SHIELD; LAB COAT & APRON; VENT HOOD; PROPER GLOVES
Storage Color Code: White (Corrosive)

Potential Health Effects

Nitric acid is extremely hazardous; it is corrosive, reactive, an oxidizer, and a poison. The following hazards are for concentrated solutions. Hazards of less concentrated solutions may be reduced. Degree of hazard for reduced concentrations is not currently addressed in the available literature.

Inhalation:
Corrosive! Inhalation of vapors can cause coughing, choking, inflammation of the nose, throat, and upper respiratory tract, and in severe cases, pulmonary edema, circulatory failure, and death.
Ingestion:
Corrosive! Swallowing can cause immediate pain and burns of the mouth, throat, esophagus and gastrointestinal tract. May cause nausea, vomiting, and diarrhea, and in severe cases, death.
Skin Contact:
Corrosive! Can cause redness, pain, and severe skin burns. Concentrated solutions cause deep ulcers and stain skin a yellow or yellow-brown color.
Eye Contact:
Corrosive! Vapors are irritating and may cause damage to the eyes. Contact may cause severe burns and permanent eye damage.
Chronic Exposure:
Long-term exposure to concentrated vapors may cause erosion of teeth and lung damage. Long-term exposures seldom occur due to the corrosive properties of the acid. Chronic exposure to cadmium, even at relatively low concentrations, may result in permanent damage to the kidney and lung, may damage the liver, may cause anemia, loss of smell, and increase risk of cancer of the lung and of the prostate.
Aggravation of Pre-existing Conditions:
Persons with pre-existing skin disorders, or eye or cardiopulmonary diseases may be more susceptible to the effects of this substance.

---

4. First Aid Measures

Immediate first aid treatment reduces the health effects of this substance.
Inhalation:
Remove to fresh air. If not breathing, give artificial respiration. If breathing is difficult, give oxygen. Get medical attention immediately.
Ingestion:
If swallowed, DO NOT INDUCE VOMITING. Give large quantities of water. Never give anything by mouth to an unconscious person. Get medical attention immediately.
Skin Contact:
Immediately flush skin with plenty of water for at least 15 minutes while removing contaminated clothing and shoes. Get medical attention immediately. Wash clothing before reuse. Thoroughly clean shoes before reuse.
Eye Contact:
Immediately flush eyes with plenty of water for at least 15 minutes, lifting lower and upper eyelids occasionally. Get medical attention immediately.

---

5. Fire Fighting Measures

Fire:
Not combustible, but concentrated material is a strong oxidizer and its heat of reaction with reducing agents or combustibles may cause ignition.
Explosion:
Concentrated material reacts explosively with combustible organic or readily oxidizable materials such as: alcohols, turpentine, charcoal, organic refuse, metal powder, hydrogen sulfide, etc. Reacts with most metals to release hydrogen gas which can form explosive mixtures with air.
Fire Extinguishing Media:
Use any means suitable for extinguishing surrounding fire.
Special Information:
In the event of a fire, wear full protective clothing and NIOSH-approved self-contained breathing apparatus with full facepiece operated in the pressure demand or other positive pressure mode.

---

6. Accidental Release Measures

Ventilate area of leak or spill. Wear appropriate personal protective equipment as specified in Section 8. Isolate hazard area. Keep unnecessary and unprotected personnel from entering. Contain and recover liquid when possible. Neutralize with alkaline material (soda ash, lime), then absorb with an inert material (e. g., vermiculite, dry sand, earth), and place in a chemical waste container. Do not use combustible materials, such as saw dust. Do not flush to sewer! US Regulations (CERCLA) require reporting spills and releases to soil, water and air in excess of reportable quantities. The toll free number for the US Coast Guard National Response Center is (800) 424-8802.

J. T. Baker NEUTRASORB(R) or TEAM(R) 'Low Na+' acid neutralizers are recommended for spills of this product.

7. Handling and Storage

Store in a cool, dry, ventilated storage area with acid resistant floors and good drainage. Protect from physical damage. Keep out of direct sunlight and away from heat, water, and incompatible materials. Do not wash out container and use it for other purposes. When diluting, the acid should always be added slowly to water and in small amounts. Never use hot water and never add water to the acid. Water added to acid can cause uncontrolled boiling and splashing. When opening metal containers, use non-sparking tools because of the possibility of hydrogen gas being present. Wear special protective equipment (Sec. 8) for maintenance break-in or where exposures may exceed established exposure levels. Wash hands, face, forearms and neck when exiting restricted areas. Shower, dispose of outer clothing, change to clean garments at the end of the day. Avoid cross-contamination of street clothes. Wash hands before eating and do not eat, drink, or smoke in workplace. Containers of this material may be hazardous when empty since they retain product residues (vapors, liquid); observe all warnings and precautions listed for the product.

8. Exposure Controls/Personal Protection

Airborne Exposure Limits:
- OSHA Permissible Exposure Limit (PEL) -
For nitric acid:
2 ppm (TWA).
For cadmium, elemental and compounds:
0.005 mg/m3 (TWA); 0.0025 mg/m3 (Action Level); OSHA Cancer Hazard.

- ACGIH Threshold Limit Value (TLV) -
For nitric acid:
2 ppm (TWA); 4 ppm (STEL).
For cadmium, elemental and compounds (inhalable particulate):
0.01 mg/m3 (TWA), A2 - Suspected human carcinogen.
For cadmium, elemental and compounds (respirable fraction):
0.002 mg/m3 (TWA), A2 - Suspected human carcinogen.

Ventilation System:
A system of local and/or general exhaust is recommended to keep employee exposures below the Airborne Exposure Limits. Local exhaust ventilation is generally preferred because it can control the emissions of the contaminant at its source, preventing dispersion of it into the general work area. Please refer to the ACGIH document, *Industrial Ventilation, A Manual of Recommended Practices*, most recent edition, for details.
Personal Respirators (NIOSH Approved):
If the exposure limit is exceeded and engineering controls are not feasible, wear a supplied air, full-facepiece respirator, airlined hood, or full-facepiece self-contained breathing apparatus. Breathing air quality must meet the requirements of the OSHA respiratory protection standard (29CFR1910.134). Canister-type respirators using sorbents are ineffective. Where respirators are required, you must have a written program covering the basic requirements in the OSHA respirator standard. These include training, fit testing,

medical approval, cleaning, maintenance, cartridge change schedules, etc. See 29CFR1910.134 for details.

Skin Protection:
Rubber or neoprene gloves and additional protection including impervious boots, apron, or coveralls, as needed in areas of unusual exposure to prevent skin contact.

Eye Protection:
Use chemical safety goggles and/or a full face shield where splashing is possible. Maintain eye wash fountain and quick-drench facilities in work area.

Other Control Measures:
Eating, drinking, and smoking should not be permitted in areas where solids or liquids containing cadmium compounds are handled, processed, or stored. See OSHA substance-specific standard for more information on personal protective equipment, engineering and work practice controls, medical surveillance, record keeping, and reporting requirements. (29 CFR 1910.1027).

---

9. Physical and Chemical Properties

Appearance:
Clear, colorless liquid.

Odor:
Odorless.

Solubility:
Soluble in water.

Specific Gravity:
No information found.

pH:
1.0 (0.1M HNO3)

% Volatiles by volume @ 21C (70F):
ca. 99

Boiling Point:
No information found.

Melting Point:
No information found.

Vapor Density (Air=1):
Not applicable.

Vapor Pressure (mm Hg):
Not applicable.

Evaporation Rate (BuAc=1):
No information found.

---

10. Stability and Reactivity

Stability:
Stable under ordinary conditions of use and storage.

Hazardous Decomposition Products:
When heated to decomposition, emits toxic nitrogen oxides fumes and hydrogen nitrate.

Hazardous Polymerization:
Will not occur.
Incompatibilities:
A dangerously powerful oxidizing agent, concentrated nitric acid is incompatible with most substances, especially strong bases, metallic powders, carbides, hydrogen sulfide, turpentine, and combustible organics.
Conditions to Avoid:
Heat, flames, ignition sources and incompatibles.

---

11. Toxicological Information

Toxicological Data:
Nitric acid: Investigated as a mutagen and reproductive effector. Cadmium: Oral rat LD50 2330 mg/kg; Inhalation rat LC50 25 mg/m3/30M; Investigated as a tumorigen, mutagen and reproductive effector.

Reproductive Toxicity:
For cadmium: May damage the reproductive system.

Carcinogenicity:
For cadmium:
EPA / IRIS classification: Group B1 - Probable human carcinogen, limited human evidence.

Regulated by OSHA as a carcinogen.

--------\Cancer Lists\----------

Ingredient	---NTP Carcinogen--- Known	Anticipated	IARC Category
Cadmium (7440-43-9)	Yes	No	1
Nitric Acid (7697-37-2)	No	No	None
Water (7732-18-5)	No	No	None

---

12. Ecological Information

Environmental Fate:
No information found.
Environmental Toxicity:
No information found.

---

13. Disposal Considerations

Whatever cannot be saved for recovery or recycling should be managed in an appropriate

and approved waste disposal facility. Processing, use or contamination of this product may change the waste management options. State and local disposal regulations may differ from federal disposal regulations. Dispose of container and unused contents in accordance with federal, state and local requirements.

---

14. Transport Information

Domestic (Land, D.O.T.)

Proper Shipping Name: CORROSIVE LIQUID, ACIDIC, INORGANIC, N.O.S. (NITRIC ACID)
Hazard Class: 8
UN/NA: UN3264
Packing Group: III
Information reported for product/size: 500ML

International (Water, I.M.O.)

Proper Shipping Name: CORROSIVE LIQUID, ACIDIC, INORGANIC, N.O.S. (NITRIC ACID)
Hazard Class: 8
UN/NA: UN3264
Packing Group: III
Information reported for product/size: 500ML

International (Air, I.C.A.O.)

Proper Shipping Name: CORROSIVE LIQUID, ACIDIC, INORGANIC, N.O.S. (NITRIC ACID)
Hazard Class: 8
UN/NA: UN3264
Packing Group: III
Information reported for product/size: 500ML

---

15. Regulatory Information

--------\Chemical Inventory Status - Part 1\--------

Ingredient	TSCA	EC	Japan	Australia
Cadmium (7440-43-9)	Yes	Yes	No	Yes
Nitric Acid (7697-37-2)	Yes	Yes	Yes	Yes
Water (7732-18-5)	Yes	Yes	Yes	Yes

--------\Chemical Inventory Status - Part 2\--------

Ingredient	Korea	--Canada-- DSL	NDSL	Phil.

Cadmium (7440-43-9)	Yes	Yes	No	Yes
Nitric Acid (7697-37-2)	Yes	Yes	No	Yes
Water (7732-18-5)	Yes	Yes	No	Yes

--------\Federal, State & International Regulations - Part 1\----------

Ingredient	-SARA 302- RQ	TPQ	------SARA 313------ List	Chemical Catg.
Cadmium (7440-43-9)	No	No	Yes	No
Nitric Acid (7697-37-2)	1000	1000	Yes	No
Water (7732-18-5)	No	No	No	No

--------\Federal, State & International Regulations - Part 2\----------

Ingredient	CERCLA	-RCRA- 261.33	-TSCA- 8(d)
Cadmium (7440-43-9)	10	No	No
Nitric Acid (7697-37-2)	1000	No	No
Water (7732-18-5)	No	No	No

Chemical Weapons Convention: No TSCA 12(b): No CDTA: No
SARA 311/312: Acute: Yes Chronic: Yes Fire: No Pressure: No
Reactivity: No (Mixture / Liquid)

WARNING:
THIS PRODUCT CONTAINS CHEMICALS KNOWN TO THE STATE OF CALIFORNIA TO CAUSE CANCER AND BIRTH DEFECTS OR OTHER REPRODUCTIVE HARM.

Australian Hazchem Code: No information found.
Poison Schedule: S6
WHMIS:
This MSDS has been prepared according to the hazard criteria of the Controlled Products Regulations (CPR) and the MSDS contains all of the information required by the CPR.

---

16. Other Information

NFPA Ratings: Health: **3** Flammability: **0** Reactivity: **0**
Label Hazard Warning:
DANGER! CORROSIVE. LIQUID AND MIST CAUSE SEVERE BURNS TO ALL BODY TISSUE. MAY BE FATAL IF SWALLOWED OR INHALED. VAPOR IRRITATING TO EYES AND RESPIRATORY TRACT. INHALATION MAY CAUSE LUNG AND TOOTH DAMAGE. MAY AFFECT RESPIRATORY SYSTEM, KIDNEYS, PROSTATE, AND BLOOD. CANCER HAZARD. CAN CAUSE CANCER. Risk of cancer depends on duration and level of exposure.
Label Precautions:
Do not get in eyes, on skin, or on clothing.
Do not breathe vapor or mist.
Use only with adequate ventilation.
Wash thoroughly after handling.
Keep container closed.

Label First Aid:
In case of contact, immediately flush eyes or skin with plenty of water for at least 15 minutes while removing contaminated clothing and shoes. Wash clothing before reuse. If inhaled, remove to fresh air. If not breathing, give artificial respiration. If breathing is difficult, give oxygen. If swallowed, DO NOT INDUCE VOMITING. Give large quantities of water. Never give anything by mouth to an unconscious person. In all cases get medical attention immediately.

Product Use:
Laboratory Reagent.

Revision Information:
MSDS Section(s) changed since last revision of document include: 8, 11.

Disclaimer:
****

Mallinckrodt Baker, Inc. provides the information contained herein in good faith but makes no representation as to its comprehensiveness or accuracy. This document is intended only as a guide to the appropriate precautionary handling of the material by a properly trained person using this product. Individuals receiving the information must exercise their independent judgment in determining its appropriateness for a particular purpose. MALLINCKRODT BAKER, INC. MAKES NO REPRESENTATIONS OR WARRANTIES, EITHER EXPRESS OR IMPLIED, INCLUDING WITHOUT LIMITATION ANY WARRANTIES OF MERCHANTABILITY, FITNESS FOR A PARTICULAR PURPOSE WITH RESPECT TO THE INFORMATION SET FORTH HEREIN OR THE PRODUCT TO WHICH THE INFORMATION REFERS. ACCORDINGLY, MALLINCKRODT BAKER, INC. WILL NOT BE RESPONSIBLE FOR DAMAGES RESULTING FROM USE OF OR RELIANCE UPON THIS INFORMATION.
****

Prepared by: Strategic Services Division
Phone Number: (314) 539-1600 (U.S.A.)

MSDS Material Safety Data Sheet

From: Mallinckrodt Baker, Inc.
222 Red School Lane
Phillipsburg, NJ 08865

J.T.Baker

24 Hour Emergency Telephone: 908-859-2151
CHEMTREC: 1-800-424-9300

National Response in Canada
CANUTEC: 613-996-6666

Outside U.S. and Canada
Chemtrec: 703-527-3887

NOTE: CHEMTREC, CANUTEC and National Response Center emergency numbers to be used only in the event of chemical emergencies involving a spill, leak, fire, exposure or accident involving chemicals.

All non-emergency questions should be directed to Customer Service (1-800-582-2537) for assistance.

BARIUM, 1,000 UG/ML OR 10,000 UG/ML

MSDS Number: B0334 --- ***Effective Date: 02/23/01***

1. Product Identification

Synonyms: None
CAS No.: Not applicable to mixtures.
Molecular Weight: 137.33
Chemical Formula: Ba
Product Codes: 5705, 5719, 6443

2. Composition/Information on Ingredients

Ingredient	CAS No	Percent	Hazardous
Barium Nitrate	10022-31-8	< 2%	Yes
Nitric Acid	7697-37-2	< 4%	Yes
Water	7732-18-5	> 94%	No

3. Hazards Identification

Emergency Overview

DANGER! CORROSIVE. LIQUID AND MIST CAUSE SEVERE BURNS TO ALL BODY TISSUE. MAY BE FATAL IF SWALLOWED OR INHALED. VAPOR IRRITATING TO EYES AND RESPIRATORY TRACT. INHALATION MAY

CAUSE LUNG AND TOOTH DAMAGE.

J.T. Baker SAF-T-DATA(tm) Ratings (Provided here for your convenience)

Health Rating: 3 - Severe (Life)
Flammability Rating: 0 - None
Reactivity Rating: 1 - Slight
Contact Rating: 3 - Severe (Corrosive)
Lab Protective Equip: GOGGLES & SHIELD; LAB COAT & APRON; VENT HOOD; PROPER GLOVES
Storage Color Code: White (Corrosive)

Potential Health Effects

Nitric acid is extremely hazardous; it is corrosive, reactive, an oxidizer, and a poison. The health effects from exposure to diluted forms of this chemical are not well documented. They are expected to be less severe than those for concentrated forms which are referenced in the descriptions below.

Inhalation:
Corrosive! Inhalation of vapors can cause breathing difficulties and lead to pneumonia and pulmonary edema, which may be fatal. Other symptoms may include coughing, choking, and irritation of the nose, throat, and respiratory tract.
Ingestion:
Corrosive! Swallowing nitric acid can cause immediate pain and burns of the mouth, throat, esophagus and gastrointestinal tract.
Skin Contact:
Corrosive! Can cause redness, pain, and severe skin burns. Concentrated solutions cause deep ulcers and stain skin a yellow or yellow-brown color.
Eye Contact:
Corrosive! Vapors are irritating and may cause damage to the eyes. Contact may cause severe burns and permanent eye damage.
Chronic Exposure:
Long-term exposure to concentrated vapors may cause erosion of teeth and lung damage. Long-term exposures seldom occur due to the corrosive properties of the acid.
Aggravation of Pre-existing Conditions:
Persons with pre-existing skin disorders, eye disease, or cardiopulmonary diseases may be more susceptible to the effects of this substance.

---

4. First Aid Measures

Immediate first aid treatment reduces the health effects of this substance.
Inhalation:
Remove to fresh air. If not breathing, give artificial respiration. If breathing is difficult, give oxygen. Get medical attention immediately.
Ingestion:

If swallowed, DO NOT INDUCE VOMITING. Give large quantities of water. Never give anything by mouth to an unconscious person. Get medical attention immediately.
Skin Contact:
Immediately flush skin with plenty of water for at least 15 minutes while removing contaminated clothing and shoes. Get medical attention immediately. Wash clothing before reuse. Thoroughly clean shoes before reuse.
Eye Contact:
Immediately flush eyes with plenty of water for at least 15 minutes, lifting lower and upper eyelids occasionally. Get medical attention immediately.

---

5. Fire Fighting Measures

Fire:
Not combustible, but concentrated material is a strong oxidizer and its heat of reaction with reducing agents or combustibles may cause ignition.
Explosion:
Concentrated material reacts explosively with combustible organic or readily oxidizable materials such as: alcohols, turpentine, charcoal, organic refuse, metal powder, hydrogen sulfide, etc. Reacts with most metals to release hydrogen gas which can form explosive mixtures with air.
Fire Extinguishing Media:
If involved in a fire, use water spray.
Special Information:
Increases the flammability of combustible, organic and readily oxidizable materials. In the event of a fire, wear full protective clothing and NIOSH-approved self-contained breathing apparatus with full facepiece operated in the pressure demand or other positive pressure mode.

---

6. Accidental Release Measures

Ventilate area of leak or spill. Wear appropriate personal protective equipment as specified in Section 8. Isolate hazard area. Keep unnecessary and unprotected personnel from entering. Contain and recover liquid when possible. Neutralize with alkaline material (soda ash, lime), then absorb with an inert material (e. g., vermiculite, dry sand, earth), and place in a chemical waste container. Do not use combustible materials, such as saw dust. Do not flush to sewer! US Regulations (CERCLA) require reporting spills and releases to soil, water and air in excess of reportable quantities. The toll free number for the US Coast Guard National Response Center is (800) 424-8802.

J. T. Baker NEUTRASORB(R) or TEAM(R) 'Low Na+' acid neutralizers are recommended for spills of this product.

---

7. Handling and Storage

Store in a cool, dry, ventilated storage area with acid resistant floors and good drainage. Protect from physical damage. Keep out of direct sunlight and away from heat, water, and incompatible materials. Do not wash out container and use it for other purposes. When diluting, the acid should always be added slowly to water and in small amounts. Never use hot water and never add water to the acid. Water added to acid can cause uncontrolled boiling and splashing. Containers of this material may be hazardous when empty since they retain product residues (vapors, liquid); observe all warnings and precautions listed for the product.

---

8. Exposure Controls/Personal Protection

Airborne Exposure Limits:
For Nitric Acid:
OSHA Permissible Exposure Limit (PEL):
2 ppm (TWA)
ACGIH Threshold Limit Value (TLV):
2 ppm (TWA); 4 ppm (STEL)

For Soluble Barium Compounds:
OSHA Permissible Exposure Limit (PEL):
0.5 mg (Ba)/m3
ACGIH Threshold Limit Value (TLV):
0.5 mg (Ba)/m3 A4 - not classifiable as a human carcinogen

Ventilation System:
A system of local and/or general exhaust is recommended to keep employee exposures below the Airborne Exposure Limits. Local exhaust ventilation is generally preferred because it can control the emissions of the contaminant at its source, preventing dispersion of it into the general work area. Please refer to the ACGIH document, *Industrial Ventilation, A Manual of Recommended Practices*, most recent edition, for details.
Personal Respirators (NIOSH Approved):
If the exposure limit is exceeded, wear a supplied air, full-facepiece respirator, airlined hood, or full-facepiece self-contained breathing apparatus. Canister-type respirators using sorbents are ineffective.
Skin Protection:
Rubber or neoprene gloves and additional protection including impervious boots, apron, or coveralls, as needed in areas of unusual exposure to prevent skin contact.
Eye Protection:
Use chemical safety goggles and/or a full face shield where splashing is possible. Maintain eye wash fountain and quick-drench facilities in work area.

---

9. Physical and Chemical Properties

Appearance:
Clear, colorless liquid.

Odor:
Odorless.
Solubility:
Infinitely soluble.
Specific Gravity:
No information found.
pH:
No information found.
% Volatiles by volume @ 21C (70F):
> 99
Boiling Point:
No information found.
Melting Point:
No information found.
Vapor Density (Air=1):
Not applicable.
Vapor Pressure (mm Hg):
Not applicable.
Evaporation Rate (BuAc=1):
No information found.

---

10. Stability and Reactivity

Stability:
Stable under ordinary conditions of use and storage. Containers may burst when heated.
Hazardous Decomposition Products:
When heated to decomposition, emits toxic nitrogen oxides fumes and hydrogen nitrate.
Hazardous Polymerization:
Will not occur.
Incompatibilities:
A dangerously powerful oxidizing agent, concentrated nitric acid is incompatible with most substances, especially strong bases, metallic powders, carbides, hydrogen sulfide, turpentine, and combustible organics.
Conditions to Avoid:
Heat, incompatibles.

---

11. Toxicological Information

For Nitric Acid: Investigated as a mutagen and reproductive effector. For Barium Nitrate: Oral rat LD50: 355 mg/kg. Irritation Data: Skin rabbit 500 mg/24H mild. Eye rabbit 100 mg/24H severe.

```
--------\Cancer Lists\-----------------------------------------------------
                                        ---NTP Carcinogen---
Ingredient                              Known    Anticipated    IARC Category
```

Barium Nitrate (10022-31-8)	No	No	None
Nitric Acid (7697-37-2)	No	No	None
Water (7732-18-5)	No	No	None

12. Ecological Information

Environmental Fate:
No information found.
Environmental Toxicity:
No information found.

13. Disposal Considerations

Whatever cannot be saved for recovery or recycling should be handled as hazardous waste and sent to a RCRA approved waste facility. Processing, use or contamination of this product may change the waste management options. State and local disposal regulations may differ from federal disposal regulations. Dispose of container and unused contents in accordance with federal, state and local requirements.

14. Transport Information

Domestic (Land, D.O.T.)

Proper Shipping Name: CORROSIVE LIQUID, ACIDIC, INORGANIC, N.O.S. (NITRIC ACID)
Hazard Class: 8
UN/NA: UN3264
Packing Group: III
Information reported for product/size: 500ML

International (Water, I.M.O.)

Proper Shipping Name: CORROSIVE LIQUID, ACIDIC, INORGANIC, N.O.S. (NITRIC ACID)
Hazard Class: 8
UN/NA: UN3264
Packing Group: III
Information reported for product/size: 500ML

International (Air, I.C.A.O.)

Proper Shipping Name: CORROSIVE LIQUID, ACIDIC, INORGANIC, N.O.S. (NITRIC ACID)

Hazard Class: 8
UN/NA: UN3264
Packing Group: III
Information reported for product/size: 500ML

15. Regulatory Information

--------\Chemical Inventory Status - Part 1\--------

Ingredient	TSCA	EC	Japan	Australia
Barium Nitrate (10022-31-8)	Yes	Yes	Yes	Yes
Nitric Acid (7697-37-2)	Yes	Yes	Yes	Yes
Water (7732-18-5)	Yes	Yes	Yes	Yes

--------\Chemical Inventory Status - Part 2\--------

Ingredient	Korea	--Canada-- DSL	NDSL	Phil.
Barium Nitrate (10022-31-8)	Yes	Yes	No	Yes
Nitric Acid (7697-37-2)	Yes	Yes	No	Yes
Water (7732-18-5)	Yes	Yes	No	Yes

--------\Federal, State & International Regulations - Part 1\--------

Ingredient	-SARA 302- RQ	TPQ	------SARA 313------ List	Chemical Catg.
Barium Nitrate (10022-31-8)	No	No	No	Barium compo
Nitric Acid (7697-37-2)	1000	1000	Yes	No
Water (7732-18-5)	No	No	No	No

--------\Federal, State & International Regulations - Part 2\--------

Ingredient	CERCLA	-RCRA- 261.33	-TSCA- 8(d)
Barium Nitrate (10022-31-8)	No	No	No
Nitric Acid (7697-37-2)	1000	No	No
Water (7732-18-5)	No	No	No

Chemical Weapons Convention: No TSCA 12(b): No CDTA: No
SARA 311/312: Acute: Yes Chronic: Yes Fire: No Pressure: No
Reactivity: No (Mixture / Liquid)

Australian Hazchem Code: No information found.
Poison Schedule: S6
WHMIS:
This MSDS has been prepared according to the hazard criteria of the Controlled Products Regulations (CPR) and the MSDS contains all of the information required by the CPR.

16. Other Information

NFPA Ratings: Health: **3** Flammability: **0** Reactivity: **0**
Label Hazard Warning:
DANGER! CORROSIVE. LIQUID AND MIST CAUSE SEVERE BURNS TO ALL BODY TISSUE. MAY BE FATAL IF SWALLOWED OR INHALED. VAPOR IRRITATING TO EYES AND RESPIRATORY TRACT. INHALATION MAY CAUSE LUNG AND TOOTH DAMAGE.
Label Precautions:
Do not get in eyes, on skin, or on clothing.
Do not breathe vapor or mist.
Use only with adequate ventilation.
Wash thoroughly after handling.
Keep container closed.
Label First Aid:
In case of contact, immediately flush eyes or skin with plenty of water for at least 15 minutes while removing contaminated clothing and shoes. Wash clothing before reuse. If swallowed, DO NOT INDUCE VOMITING. Give large quantities of water. Never give anything by mouth to an unconscious person. If inhaled, remove to fresh air. If not breathing, give artificial respiration. If breathing is difficult, give oxygen. In all cases get medical attention immediately.
Product Use:
Industrial chemical.
Revision Information:
No changes.
Disclaimer:
****

Mallinckrodt Baker, Inc. provides the information contained herein in good faith but makes no representation as to its comprehensiveness or accuracy. This document is intended only as a guide to the appropriate precautionary handling of the material by a properly trained person using this product. Individuals receiving the information must exercise their independent judgment in determining its appropriateness for a particular purpose. MALLINCKRODT BAKER, INC. MAKES NO REPRESENTATIONS OR WARRANTIES, EITHER EXPRESS OR IMPLIED, INCLUDING WITHOUT LIMITATION ANY WARRANTIES OF MERCHANTABILITY, FITNESS FOR A PARTICULAR PURPOSE WITH RESPECT TO THE INFORMATION SET FORTH HEREIN OR THE PRODUCT TO WHICH THE INFORMATION REFERS. ACCORDINGLY, MALLINCKRODT BAKER, INC. WILL NOT BE RESPONSIBLE FOR DAMAGES RESULTING FROM USE OF OR RELIANCE UPON THIS INFORMATION.
****

Prepared by: Environmental Health & Safety
Phone Number: (314) 654-1600 (U.S.A.)

Fisher Scientific CANADA
A Fisher Scientific International Company

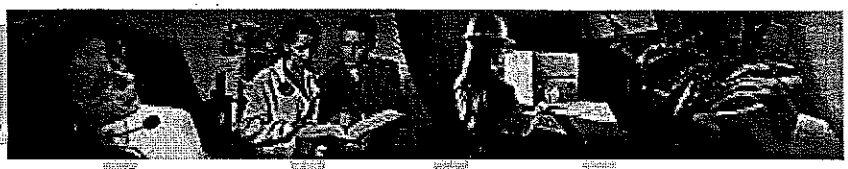

**** SECTION 1 - CHEMICAL PRODUCT AND COMPANY IDENTIFICATION ****

MSDS Name: Chromium
Catalog Numbers:
S79965-1, S79965, S79965-2, S799651, S799652
Synonyms:
Chrome
Company Identification: Fisher Scientific
1 Reagent Lane
Fairlawn, NJ 07410
For information, call: 201-796-7100
Emergency Number: 201-796-7100
For CHEMTREC assistance, call: 800-424-9300
For International CHEMTREC assistance, call: 703-527-3887

**** SECTION 2 - COMPOSITION, INFORMATION ON INGREDIENTS ****

CAS#	Chemical Name	%	EINECS#
7440-47-3	CHROMIUM	>=99%	231-157-5

Hazard Symbols: XN
Risk Phrases: 40

**** SECTION 3 - HAZARDS IDENTIFICATION ****

EMERGENCY OVERVIEW

Appearance: silver-gray.
Warning! May cause allergic skin reaction. Causes digestive tract irritation. May cause liver damage. May cause kidney damage. May cause lung damage. Causes eye and skin irritation. Causes severe respiratory tract irritation.
Target Organs: Liver.

Potential Health Effects

Eye:
Causes eye irritation. May cause conjunctivitis.

Skin:
Causes skin irritation. Prolonged and/or repeated contact may cause irritation and/or dermatitis. May cause skin sensitization, an allergic reaction, which becomes evident upon re-exposure to this material.

Ingestion:
May cause irritation of the digestive tract. May cause liver damage.

Inhalation:
Causes respiratory tract irritation. Inhalation of fumes may cause metal fume fever, which is characterized by flu-like symptoms with metallic taste, fever, chills, cough, weakness, chest pain, muscle pain and increased white blood cell count. May cause asthma and shortness of breath. May cause headache, coughing, fever, weight

loss, and pneumoconiosis.

Chronic:

Prolonged inhalation may cause respiratory tract inflammation and lung damage.

**** SECTION 4 - FIRST AID MEASURES ****

Eyes:

Flush eyes with plenty of water for at least 15 minutes, occasionally lifting the upper and lower eyelids. Get medical aid immediately.

Skin:

Flush skin with plenty of soap and water for at least 15 minutes while removing contaminated clothing and shoes. Get medical aid if irritation develops or persists. Wash clothing before reuse.

Ingestion:

Do NOT induce vomiting. If victim is conscious and alert, give 2-4 cupfuls of milk or water. Never give anything by mouth to an unconscious person. Get medical aid immediately.

Inhalation:

Remove from exposure to fresh air immediately. If not breathing, give artificial respiration. If breathing is difficult, give oxygen. Get medical aid. Do NOT use mouth-to-mouth resuscitation.

Notes to Physician:

Treat symptomatically and supportively.

**** SECTION 5 - FIRE FIGHTING MEASURES ****

General Information:

Evacuate area and fight fire from a safe distance. As in any fire, wear a self-contained breathing apparatus in pressure-demand, MSHA/NIOSH (approved or equivalent), and full protective gear. May burn with invisible flame. During a fire, irritating and highly toxic gases may be generated by thermal decomposition or combustion. Dust can be an explosion hazard when exposed to heat or flame.

Extinguishing Media:

Use dry sand or earth to smother fire. Use dry chemical to fight fire. Contact professional fire-fighters immediately.

Autoignition Temperature:Not available.
Flash Point: Not available.
Explosion Limits, lower:.0230oz/ft3
Explosion Limits, upper:Not available.
NFPA Rating: (estimated) Health: 2; Flammability: 1; Reactivity: 1

**** SECTION 6 - ACCIDENTAL RELEASE MEASURES ****

General Information: Use proper personal protective equipment as indicated in Section 8.

Spills/Leaks:

Clean up spills immediately, observing precautions in the Protective Equipment section. Sweep up or absorb material, then place into a suitable clean, dry, closed container for disposal. Avoid generating dusty conditions. Remove all sources of ignition. Isolate area and deny entry. Place under an inert atmosphere. Do not use combustible materials such as paper towels to clean up spill.

**** SECTION 7 - HANDLING and STORAGE ****

Handling:

Wash thoroughly after handling. Remove contaminated clothing and wash before reuse. Use with adequate ventilation. Minimize dust generation and accumulation. Use spark-proof tools and explosion proof equipment. Avoid contact with skin and eyes. Keep container tightly closed. Avoid contact with heat, sparks and flame. Avoid ingestion and inhalation. Handle under an inert atmosphere.

Storage:

Keep away from heat, sparks, and flame. Store in a tightly closed container. Keep from contact with oxidizing materials. Store in a cool, dry, well-ventilated area away from incompatible substances. Keep away from acids. Keep containers tightly closed. Do not expose to air. Store under an inert atmosphere.

**** SECTION 8 - EXPOSURE CONTROLS, PERSONAL PROTECTION ****

Engineering Controls:

Facilities storing or utilizing this material should be equipped with an eyewash facility and a safety shower. Use adequate general or local exhaust ventilation to keep airborne concentrations below the permissible exposure limits.

Exposure Limits

Chemical Name	ACGIH	NIOSH	OSHA - Final PELs
CHROMIUM	0.5 mg/m3	as Cr: 0.5 mg/m3 TWA; see Appendix C for supplementary exposure limits as Cr: 250 mg/m3 IDLH	1 mg/m3 TWA

OSHA Vacated PELs:

CHROMIUM:

(as Cr): 1 mg/m3 TWA

Personal Protective Equipment

Eyes:

Wear appropriate protective eyeglasses or chemical safety goggles as described by OSHA's eye and face protection regulations in 29 CFR 1910.133 or European Standard EN166.

Skin:

Wear appropriate gloves to prevent skin exposure.

Clothing:

Wear appropriate protective clothing to prevent skin exposure.

Respirators:

Follow the OSHA respirator regulations found in 29CFR 1910.134 or European Standard EN 149. Always use a NIOSH or European Standard EN 149 approved respirator when necessary.

**** SECTION 9 - PHYSICAL AND CHEMICAL PROPERTIES ****

Physical State:	Solid
Appearance:	silver-gray
Odor:	odorless
pH:	Not available.
Vapor Pressure:	Not applicable.
Vapor Density:	Not available.
Evaporation Rate:	Not applicable.
Viscosity:	Not applicable.
Boiling Point:	4784 deg F
Freezing/Melting Point:	3375 deg F
Decomposition Temperature:	Not available.
Solubility in water:	Insoluble in water.
Specific Gravity/Density:	7.2 @28C
Molecular Formula:	Cr
Molecular Weight:	51.996

**** SECTION 10 - STABILITY AND REACTIVITY ****

Chemical Stability:
Stable under normal temperatures and pressures. Powder or liquid is pyrophoric.
Conditions to Avoid:
Incompatible materials, ignition sources, dust generation, exposure to air, acids, strong oxidants.
Incompatibilities with Other Materials:
Ammonium nitrate, hydrogen peroxide, lithium, nitric oxiode, potassium chlorate, sulfuri dioxide, strong oxidizers, hydrochloric acid, sulfuric acid, nitrogen oxide,
Hazardous Decomposition Products:
Toxic chromium oxide fumes.
Hazardous Polymerization: Has not been reported.

**** SECTION 11 - TOXICOLOGICAL INFORMATION ****

RTECS#:
CAS# 7440-47-3: GB4200000
LD50/LC50:
Not available.
Carcinogenicity:
CHROMIUM -
ACGIH: A4 - Not Classifiable as a Human Carcinogen
IARC: Group 3 carcinogen
Epidemiology:
Certain hexavalent chromium compounds have been demonstrated to be carcinogenic on the basis of epidemiologic investigations on workers and experimental studies in animals. Increased incidences of respiratory cancer has been found in chromium (VI) workers. There is an increased incidence of lung cancer in industrial workers exposed to chromium (VI) compounds. Please refer to IARC volume 23 for a more detailed discussion.
Teratogenicity:
No information found.
Reproductive Effects:
No information found.
Neurotoxicity:
No information found.
Mutagenicity:
No information found.

Other Studies:
See actual entry in RTECS for complete information.

**** SECTION 12 - ECOLOGICAL INFORMATION ****

**** SECTION 13 - DISPOSAL CONSIDERATIONS ****

Chemical waste generators must determine whether a discarded chemical is classified as a hazardous waste.
US EPA guidelines for the classification determination are listed in 40 CFR Parts 261.3. Additionally, waste generators must consult state and local hazardous waste regulations to ensure complete and accurate classification.
RCRA P-Series: None listed.
RCRA U-Series: None listed.

**** SECTION 14 - TRANSPORT INFORMATION ****

US DOT
No information available
Canadian TDG
No information available.

**** SECTION 15 - REGULATORY INFORMATION ****

US FEDERAL
TSCA
CAS# 7440-47-3 is listed on the TSCA inventory.
Health & Safety Reporting List
None of the chemicals are on the Health & Safety Reporting List.
Chemical Test Rules
None of the chemicals in this product are under a Chemical Test Rule.
Section 12b
None of the chemicals are listed under TSCA Section 12b.
TSCA Significant New Use Rule
None of the chemicals in this material have a SNUR under TSCA.
SARA
Section 302 (RQ)
CAS# 7440-47-3: final RQ = 5000 pounds (2270 kg) (no reporting of rele
Section 302 (TPQ)
None of the chemicals in this product have a TPQ.
SARA Codes
CAS # 7440-47-3: acute, chronic, flammable.
Section 313
This material contains CHROMIUM (CAS# 7440-47-3, 99%),which is subject to the reporting requirements of Section 313 of SARA Title III and 40 CFR Part 372.
Clean Air Act:
CAS# 7440-47-3 listed as ** no name ** is listed as a hazardous air pollutant (HAP).
This material does not contain any Class 1 Ozone depletors.
This material does not contain any Class 2 Ozone depletors.
Clean Water Act:
None of the chemicals in this product are listed as Hazardous Substances under the CWA.
CAS# 7440-47-3 is listed as a Priority Pollutant under the Clean

Water Act.
CAS# 7440-47-3 is listed as a Toxic Pollutant under the Clean Water Act.

OSHA:
None of the chemicals in this product are considered highly hazardous by OSHA.

STATE
CHROMIUM can be found on the following state right to know lists: California, New Jersey, Florida, Pennsylvania, Minnesota, Massachusetts.
California No Significant Risk Level:
None of the chemicals in this product are listed.

European/International Regulations
European Labeling in Accordance with EC Directives
Hazard Symbols: XN
Risk Phrases:
R 40 Possible risks of irreversible effects.
Safety Phrases:

WGK (Water Danger/Protection)
CAS# 7440-47-3: No information available.

United Kingdom Occupational Exposure Limits
CAS# 7440-47-3: OES-United Kingdom, TWA 0.5 mg/m3 TWA

Canada
CAS# 7440-47-3 is listed on Canada's DSL List.
This product has a WHMIS classification of D2A, D2B.
CAS# 7440-47-3 is listed on Canada's Ingredient Disclosure List.

Exposure Limits
CAS# 7440-47-3: OEL-ARAB Republic of Egypt:TWA 0.05 mg/m3
OEL-AUSTRALIA:TWA 0.05 mg/m3
OEL-BELGIUM:TWA 0.5 mg/m3
OEL-DENMARK:TWA 0.5 mg/m3
OEL-FINLAND:TWA 0.01 mg/m3
OEL-FRANCE:TWA 0.5 mg/m3
OEL-JAPAN:TWA 0.5 mg/m3
OEL-THE NETHERLANDS:TWA 0.5 mg/m3
OEL-THE PHILIPPINES:TWA 1 mg/m3
OEL-SWEDEN:TWA 0.5 mg/m3
OEL-UNITED KINGDOM:TWA 0.5 mg/m3
OEL IN BULGARIA, COLOMBIA, JORDAN, KOREA check ACGIH TLV
OEL IN NEW ZEALAND, SINGAPORE, VIETNAM check ACGI TLV

**** SECTION 16 - ADDITIONAL INFORMATION ****

MSDS Creation Date: 3/01/1999 Revision #4 Date: 8/02/2000

The information above is believed to be accurate and represents the best information currently available to us. However, we make no warranty of merchantability or any other warranty, express or implied, with respect to such information, and we assume no liability resulting from its use. Users should make their own investigations to determine the suitability of the information for their particular purposes. In no way shall the company be liable for any claims, losses, or damages of any third party or for lost profits or any special, indirect, incidental, consequential or exemplary damages, howsoever arising, even if the company has been advised of the possibility of such damages.

MSDS Material Safety Data Sheet

24 Hour Emergency Telephone: 908-859-2151
CHEMTREC: 1-800-424-9300

National Response in Canada
CANUTEC: 613-996-6666

Outside U.S. and Canada
Chemtrec: 703-527-3887

NOTE: CHEMTREC, CANUTEC and National Response Center emergency numbers to be used only in the event of chemical emergencies involving a spill, leak, fire, exposure or accident involving chemicals.

From: Mallinckrodt Baker, Inc.
222 Red School Lane
Phillipsburg, NJ 08865

J.T.Baker

All non-emergency questions should be directed to Customer Service (1-800-582-2537) for assistance.

Selenium

MSDS Number: S1106 --- *Effective Date: 08/02/00*

1. Product Identification

Synonyms: Elemental Selenium; Selen; C.I. 77805
CAS No.: 7782-49-2
Molecular Weight: 78.96
Chemical Formula: Se
Product Codes: 3395

2. Composition/Information on Ingredients

Ingredient	CAS No	Percent	Hazardous
Selenium	7782-49-2	90 - 100%	Yes

3. Hazards Identification

Emergency Overview

WARNING! CAUSES SEVERE IRRITATION TO EYES, SKIN AND RESPIRATORY TRACT. HARMFUL IF SWALLOWED OR INHALED. AFFECTS LIVER, KIDNEYS, BLOOD, SPLEEN.

J.T. Baker SAF-T-DATA(tm) Ratings (Provided here for your convenience)

Health Rating: 3 - Severe (Life)
Flammability Rating: 0 - None
Reactivity Rating: 1 - Slight
Contact Rating: 2 - Moderate
Lab Protective Equip: GOGGLES; LAB COAT; VENT HOOD; PROPER GLOVES
Storage Color Code: Blue (Health)

Potential Health Effects

Inhalation:
Severe irritant to the respiratory system. Soreness, coughing, labored breathing are symptoms which may subside and return. Lung edema may occur in acute cases. Cases with flu-like symptoms resembling metal fume fever within 24 hours of exposure have been reported.
Ingestion:
May cause severe irritation to the mouth and throat. Gastrointestinal disturbances may be expected with nausea, abdominal pain, and vomiting.
Skin Contact:
Causes severe irritation. Symptoms include redness, itching and pain.
Eye Contact:
May cause severe irritation, redness, pain.
Chronic Exposure:
Chronic exposure may cause odor of garlic on breath, fatigue, irritability, repsiratory tract irritation, gastrointestinal irritation, metallic taste, and allergic eye reaction. Based on animal studies, may cause blood, liver, kidney and spleen effects.
Aggravation of Pre-existing Conditions:
Person with a history of asthma, allergies, or known sensitization to selenium, or with a history of other chronic respiratory disease, gastrointestinal disturbances, disorders of the liver or kidneys, or recurrent dermatitis would be expected to be at increased risk from exposure.

---

4. First Aid Measures

Inhalation:
Remove to fresh air. If not breathing, give artificial respiration. If breathing is difficult, give oxygen. Get medical attention.
Ingestion:
Do NOT induce vomiting. Give large amounts of water. Never give anything by mouth to an unconscious person. Get medical attention.
Skin Contact:
Immediately flush skin with plenty of water for at least 15 minutes. Remove contaminated clothing and shoes. Get medical attention. Wash clothing before reuse. Thoroughly clean shoes before reuse.
Eye Contact:
Immediately flush eyes with plenty of water for at least 15 minutes, lifting lower and upper

eyelids occasionally. Get medical attention immediately.

---

5. Fire Fighting Measures

Fire:
Not considered to be a fire hazard.
Explosion:
Not considered to be an explosion hazard.
Fire Extinguishing Media:
Use any means suitable for extinguishing surrounding fire.
Special Information:
In the event of a fire, wear full protective clothing and NIOSH-approved self-contained breathing apparatus with full facepiece operated in the pressure demand or other positive pressure mode.

---

6. Accidental Release Measures

Ventilate area of leak or spill. Keep unnecessary and unprotected people away from area of spill. Wear appropriate personal protective equipment as specified in Section 8. Spills: Pick up and place in a suitable container for reclamation or disposal, using a method that does not generate dust. US Regulations (CERCLA) require reporting spills and releases to soil, water and air in excess of reportable quantities. The toll free number for the US Coast Guard National Response Center is (800) 424-8802.

---

7. Handling and Storage

Keep in a tightly closed container, stored in a cool, dry, ventilated area. Protect against physical damage. Isolate from incompatible substances. Containers of this material may be hazardous when empty since they retain product residues (dust, solids); observe all warnings and precautions listed for the product.

---

8. Exposure Controls/Personal Protection

Airborne Exposure Limits:
-OSHA Permissible Exposure Limit (PEL):
0.2 mg/m3, Selenium Compounds, as Se

-ACGIH Threshold Limit Value (TLV):
0.2 mg/m3, Selenium & Compounds, as Se
Ventilation System:

A system of local and/or general exhaust is recommended to keep employee exposures below the Airborne Exposure Limits. Local exhaust ventilation is generally preferred because it can control the emissions of the contaminant at its source, preventing dispersion of it into the general work area. Please refer to the ACGIH document, *Industrial Ventilation, A Manual of Recommended Practices*, most recent edition, for details.

Personal Respirators (NIOSH Approved):
If the exposure limit is exceeded, a half-face dust/mist respirator may be worn for up to ten times the exposure limit or the maximum use concentration specified by the appropriate regulatory agency or respirator supplier, whichever is lowest. A full-face piece dust/mist respirator may be worn up to 50 times the exposure limit, or the maximum use concentration specified by the appropriate regulatory agency, or respirator supplier, whichever is lowest. For emergencies or instances where the exposure levels are not known, use a full-facepiece positive-pressure, air-supplied respirator. WARNING: Air-purifying respirators do not protect workers in oxygen-deficient atmospheres.

Skin Protection:
Wear impervious protective clothing, including boots, gloves, lab coat, apron or coveralls, as appropriate, to prevent skin contact.

Eye Protection:
Use chemical safety goggles and/or full face shield where dusting or splashing of solutions is possible. Maintain eye wash fountain and quick-drench facilities in work area.

---

9. Physical and Chemical Properties

Appearance:
Small blue-black metallic shot.

Odor:
Odorless.

Solubility:
Insoluble in water.

Specific Gravity:
4.26-4.81

pH:
No information found.

% Volatiles by volume @ 21C (70F):
0

Boiling Point:
690C (1274F)

Melting Point:
170 - 217C (338 - 423F)

Vapor Density (Air=1):
Not applicable.

Vapor Pressure (mm Hg):
Not applicable.

Evaporation Rate (BuAc=1):
Not applicable.

---

10. Stability and Reactivity

Stability:
Stable under ordinary conditions of use and storage.
Hazardous Decomposition Products:
Toxic oxides of selenium form when heated to decomposition.
Hazardous Polymerization:
Will not occur.
Incompatibilities:
Strong oxidizers, strong acids, and a wide range of other materials.
Conditions to Avoid:
Moisture and incompatibles.

---

11. Toxicological Information

Toxicological Data:
Oral Rat LD50: 6700 mg/kg. Investigated as a tumorigen and a reproductive effector.
Carcinogenicity:
EPA / IRIS classification: Group D1 - Not classifiable as a human carcinogen.

--------\Cancer Lists\----------

Ingredient	---NTP Carcinogen--- Known	Anticipated	IARC Category
Selenium (7782-49-2)	No	No	3

---

12. Ecological Information

Environmental Fate:
No information found.
Environmental Toxicity:
No information found.

---

13. Disposal Considerations

Whatever cannot be saved for recovery or recycling should be handled as hazardous waste and sent to a RCRA approved waste facility. Processing, use or contamination of this product may change the waste management options. State and local disposal regulations may differ from federal disposal regulations. Dispose of container and unused contents in accordance with federal, state and local requirements.

---

14. Transport Information

Not regulated.

---

15. Regulatory Information

--------\Chemical Inventory Status - Part 1\--------

Ingredient	TSCA	EC	Japan	Australia
Selenium (7782-49-2)	Yes	Yes	No	Yes

--------\Chemical Inventory Status - Part 2\--------

Ingredient	Korea	--Canada-- DSL	NDSL	Phil.
Selenium (7782-49-2)	Yes	Yes	No	Yes

--------\Federal, State & International Regulations - Part 1\--------

Ingredient	-SARA 302- RQ	TPQ	------SARA 313------ List	Chemical Catg.
Selenium (7782-49-2)	No	No	No	Selenium cmp

--------\Federal, State & International Regulations - Part 2\--------

Ingredient	CERCLA	-RCRA- 261.33	-TSCA- 8(d)
Selenium (7782-49-2)	100	No	No

Chemical Weapons Convention: No TSCA 12(b): No CDTA: No
SARA 311/312: Acute: Yes Chronic: Yes Fire: No Pressure: No
Reactivity: No (Pure / Solid)

Australian Hazchem Code: 2Z
Poison Schedule: No information found.
WHMIS:
This MSDS has been prepared according to the hazard criteria of the Controlled Products Regulations (CPR) and the MSDS contains all of the information required by the CPR.

---

16. Other Information

NFPA Ratings: Health: **2** Flammability: **0** Reactivity: **0**
Label Hazard Warning:
WARNING! CAUSES SEVERE IRRITATION TO EYES, SKIN AND RESPIRATORY TRACT. HARMFUL IF SWALLOWED OR INHALED. AFFECTS LIVER, KIDNEYS, BLOOD, SPLEEN.

Label Precautions:
Avoid contact with eyes, skin and clothing.
Wash thoroughly after handling.
Avoid breathing dust.
Do not breathe mist.
Use only with adequate ventilation.
Label First Aid:
If swallowed, DO NOT INDUCE VOMITING. Give large quantities of water. Never give anything by mouth to an unconscious person. If inhaled, remove to fresh air. If not breathing, give artificial respiration. If breathing is difficult, give oxygen. In case of contact, immediately flush eyes or skin with plenty of water for at least 15 minutes. Remove contaminated clothing and shoes. Wash clothing before reuse. In all cases, get medical attention.
Product Use:
Laboratory Reagent.
Revision Information:
No changes.
Disclaimer:
****

Mallinckrodt Baker, Inc. provides the information contained herein in good faith but makes no representation as to its comprehensiveness or accuracy. This document is intended only as a guide to the appropriate precautionary handling of the material by a properly trained person using this product. Individuals receiving the information must exercise their independent judgment in determining its appropriateness for a particular purpose. MALLINCKRODT BAKER, INC. MAKES NO REPRESENTATIONS OR WARRANTIES, EITHER EXPRESS OR IMPLIED, INCLUDING WITHOUT LIMITATION ANY WARRANTIES OF MERCHANTABILITY, FITNESS FOR A PARTICULAR PURPOSE WITH RESPECT TO THE INFORMATION SET FORTH HEREIN OR THE PRODUCT TO WHICH THE INFORMATION REFERS. ACCORDINGLY, MALLINCKRODT BAKER, INC. WILL NOT BE RESPONSIBLE FOR DAMAGES RESULTING FROM USE OF OR RELIANCE UPON THIS INFORMATION.
****

Prepared by: Environmental Health & Safety
Phone Number: (314) 654-1600 (U.S.A.)

Fisher Scientific CANADA
A Fisher Scientific International Company

**** SECTION 1 - CHEMICAL PRODUCT AND COMPANY IDENTIFICATION ****

MSDS Name: Mercury
Catalog Numbers:
S71968, M139 1LB, M139 5LB, M139-1LB, M139-5LB, M1391LB, M1395LB, M140 14LB M140 1LB, M140 5LB, M140-14LB, M140-1LB, M140-5LB, M14014LB, M1401LB, M1405LB, M141 1LB, M141 6LB, M141-1LB, M141-6LB, M1411LB, M1416LB, NC9534278, S40672B, S41542, S41599, S41599B, S41599E, S41599G, S41599J, S41599K, S41599M, S41600P, S41600S, S41600W, S41630A, S41630B, S41630C, S41631, S41631A, S41631B, S41631C, S41645, S45245, S46981, S50443, S71966, S71967, S78777
Synonyms:
Colloidal mercury; Hydrargyrum; Metallic mercury; Quick silver; Liquid silver
Company Identification: Fisher Scientific
1 Reagent Lane
Fairlawn, NJ 07410
For information, call: 201-796-7100
Emergency Number: 201-796-7100
For CHEMTREC assistance, call: 800-424-9300
For International CHEMTREC assistance, call: 703-527-3887

**** SECTION 2 - COMPOSITION, INFORMATION ON INGREDIENTS ****

CAS#	Chemical Name	%	EINECS#
7439-97-6	Mercury	ca.100	231-106-7

Hazard Symbols: T N
Risk Phrases: 23 33 50/53

**** SECTION 3 - HAZARDS IDENTIFICATION ****

EMERGENCY OVERVIEW

Appearance: silver.
Danger! Harmful if inhaled. Corrosive. This substance has caused adverse reproductive and fetal effects in animals. May be absorbed through intact skin. May cause central nervous system effects. May cause liver and kidney damage. Inhalation of fumes may cause metal-fume fever. May cause severe respiratory tract irritation with possible burns. Causes eye and skin irritation and possible burns. May cause severe digestive tract irritation with possible burns. Possible sensitizer.
Target Organs: Blood, kidneys, central nervous system, liver, brain.

Potential Health Effects
Eye:
Exposure to mercury or mercury compounds can cause discoloration on the front surface of the lens, which does not interfere with vision. Causes eye irritation and possible burns. Contact with mercury or

mercury compounds can cause ulceration of the conjunctiva and cornea.

Skin:

May be absorbed through the skin in harmful amounts. May cause skin sensitization, an allergic reaction, which becomes evident upon re-exposure to this material. Causes skin irritation and possible burns. May cause skin rash (in milder cases), and cold and clammy skin with cyanosis or pale color.

Ingestion:

May cause severe and permanent damage to the digestive tract. May cause perforation of the digestive tract. May cause effects similar to those for inhalation exposure. May cause systemic effects.

Inhalation:

Causes chemical burns to the respiratory tract. Inhalation of fumes may cause metal fume fever, which is characterized by flu-like symptoms with metallic taste, fever, chills, cough, weakness, chest pain, muscle pain and increased white blood cell count. May cause central nervous system effects including vertigo, anxiety, depression, muscle incoordination, and emotional instability. Aspiration may lead to pulmonary edema. May cause systemic effects. May cause respiratory sensitization.

Chronic:

May cause liver and kidney damage. May cause reproductive and fetal effects. Effects may be delayed. Chronic exposure to mercury may cause permanent central nervous system damage, fatigue, weight loss, tremors, personality changes. Chronic ingestion may cause accumulation of mercury in body tissues. Prolonged or repeated exposure may cause inflammation of the mouth and gums, excessive salivation, and loosening of the teeth.

**** SECTION 4 - FIRST AID MEASURES ****

Eyes:

Get medical aid immediately. Do NOT allow victim to rub or keep eyes closed. Extensive irrigation with water is required (at least 30 minutes).

Skin:

Get medical aid immediately. Immediately flush skin with plenty of soap and water for at least 15 minutes while removing contaminated clothing and shoes. Wash clothing before reuse. Destroy contaminated shoes.

Ingestion:

Do NOT induce vomiting. If victim is conscious and alert, give 2-4 cupfuls of milk or water. Never give anything by mouth to an unconscious person. Get medical aid immediately. Wash mouth out with water.

Inhalation:

Get medical aid immediately. Remove from exposure to fresh air immediately. If breathing is difficult, give oxygen. Do NOT use mouth-to-mouth resuscitation. If breathing has ceased apply artificial respiration using oxygen and a suitable mechanical device such as a bag and a mask.

Notes to Physician:

The concentration of mercury in whole blood is a reasonable measure of the body-burden of mercury and thus is used for monitoring purposes. Treat symptomatically and supportively. Persons with kidney disease, chronic respiratory disease, liver disease, or skin disease may be at increased risk from exposure to this substance.

Antidote:

The use of d-Penicillamine as a chelating agent should be determined by qualified medical personnel. The use of Dimercaprol or BAL (British Anti-Lewisite) as a chelating agent should be determined by qualified medical personnel.

**** SECTION 5 - FIRE FIGHTING MEASURES ****

General Information:
As in any fire, wear a self-contained breathing apparatus in pressure-demand, MSHA/NIOSH (approved or equivalent), and full protective gear. Water runoff can cause environmental damage. Dike and collect water used to fight fire. During a fire, irritating and highly toxic gases may be generated by thermal decomposition or combustion.

Extinguishing Media:
Substance is nonflammable; use agent most appropriate to extinguish surrounding fire. Use water spray, dry chemical, carbon dioxide, or appropriate foam.

Autoignition Temperature:Not applicable.
Flash Point: Not applicable.
Explosion Limits, lower:Not available.
Explosion Limits, upper:Not available.
NFPA Rating: (estimated) Health: 3; Flammability: 0; Reactivity: 0

**** SECTION 6 - ACCIDENTAL RELEASE MEASURES ****

General Information: Use proper personal protective equipment as indicated in Section 8.

Spills/Leaks:
Absorb spill with inert material (e.g. vermiculite, sand or earth), then place in suitable container. Avoid runoff into storm sewers and ditches which lead to waterways. Clean up spills immediately, observing precautions in the Protective Equipment section. Provide ventilation.

**** SECTION 7 - HANDLING and STORAGE ****

Handling:
Wash thoroughly after handling. Remove contaminated clothing and wash before reuse. Minimize dust generation and accumulation. Keep container tightly closed. Do not get on skin or in eyes. Do not ingest or inhale. Use only in a chemical fume hood. Discard contaminated shoes. Do not breathe vapor.

Storage:
Keep container closed when not in use. Store in a tightly closed container. Store in a cool, dry, well-ventilated area away from incompatible substances. Keep away from metals. Store protected from azides.

**** SECTION 8 - EXPOSURE CONTROLS, PERSONAL PROTECTION ****

Engineering Controls:
Facilities storing or utilizing this material should be equipped with an eyewash facility and a safety shower. Use only under a chemical fume hood.

Exposure Limits

Chemical Name	ACGIH	NIOSH	OSHA - Final PELs
Mercury	0.025 mg/m3; as Hg: skin - potential for cutaneous absorption	0.05 mg/m3 TWA 10 mg/m3 IDLH	1mg/10m3 (vapor)

OSHA Vacated PELs:

Mercury:

vapor, as Hg: 0.05 mg/m3 TWA; 0.03 mg/m3 STEL; aryl and inorganic, as Hg: C 0.1 mg/m3

Personal Protective Equipment

Eyes:

Wear appropriate protective eyeglasses or chemical safety goggles as described by OSHA's eye and face protection regulations in 29 CFR 1910.133 or European Standard EN166.

Skin:

Wear appropriate protective gloves to prevent skin exposure.

Clothing:

Wear appropriate protective clothing to prevent skin exposure.

Respirators:

A respiratory protection program that meets OSHA's 29 CFR :1910.134 and ANSI Z88.2 requirements or European Standard EN 149 must be followed whenever workplace conditions warrant a respirator's use.

**** SECTION 9 - PHYSICAL AND CHEMICAL PROPERTIES ****

Physical State:	Liquid
Appearance:	silver
Odor:	odorless
pH:	Not available.
Vapor Pressure:	0.002 mm Hg @ 25C
Vapor Density:	0.468
Evaporation Rate:	Not available.
Viscosity:	15.5 mP @ 25 deg C
Boiling Point:	356.72 deg C
Freezing/Melting Point:	-38.87 deg C
Decomposition Temperature:	Not available.
Solubility in water:	Insoluble.
Specific Gravity/Density:	13.59 (water=1)
Molecular Formula:	Hg
Molecular Weight:	200.59

**** SECTION 10 - STABILITY AND REACTIVITY ****

Chemical Stability:

Stable under normal temperatures and pressures.

Conditions to Avoid:

High temperatures, incompatible materials.

Incompatibilities with Other Materials:

Metals, aluminum, ammonia, chlorates, copper, copper alloys, ethylene oxide, halogens, iron, nitrates, sulfur, sulfuric acid, oxygen, acetylene, lithium, rubidium, sodium carbide, lead, nitromethane, peroxyformic acid, calcium, chlorine dioxide, metal oxides, azides, 3-bromopropyne, alkynes + silver perchlorate, methylsilane + oxygen, tetracarbonylnickel + oxygen, boron diiodophosphide.

Hazardous Decomposition Products:

Mercury/mercury oxides.

Hazardous Polymerization: Will not occur.

**** SECTION 11 - TOXICOLOGICAL INFORMATION ****

RTECS#:

CAS# 7439-97-6: OV4550000

LD50/LC50:

Not available.

Carcinogenicity:

Mercury -

ACGIH: A4 - Not Classifiable as a Human Carcinogen

IARC: Group 3 carcinogen

Epidemiology:

Intraperitoneal, rat: TDLo = 400 mg/kg/14D-I (Tumorigenic - equivocal tumorigenic agent by RTECS criteria - tumors at site of application).

Teratogenicity:

Inhalation, rat: TCLo = 1 mg/m3/24H (female 1-20 day(s) after conception) Effects on Embryo or Fetus - fetotoxicity (except death, e.g., stunted fetus).

Reproductive Effects:

Inhalation, rat: TCLo = 890 ng/m3/24H (male 16 week(s) pre-mating) Paternal Effects - spermatogenesis (incl. genetic material, sperm morphology, motility, and count).; Inhalation, rat: TCLo = 7440 ng/m3/24H (male 16 week(s) pre-mating) Fertility - post-implantation mortality (e.g. dead and/or resorbed implants per total number of implants).

Neurotoxicity:

The brain is the critical organ in humans for chronic vapor exposure; in severe cases, spontaneous degeneration of the brain cortex can occur as a late sequela to past exposure.

Mutagenicity:

Cytogenetic Analysis: Unreported, man = 150 ug/m3.

Other Studies:

No information available.

**** SECTION 12 - ECOLOGICAL INFORMATION ****

Ecotoxicity:

In aquatic systems, mercury appears to bind to dissolved matter or fine particulates, while the transport of mercury bound to dust particles in the atmosphere or bed sediment particles in rivers and lakes is generally less substantial. The conversion, in aquatic environments, of inorganic mercury cmpd to methyl mercury implies that recycling of mercury from sediment to water to air and back could be a rapid process.

Other

Harmful to aquatic life in very low concentrations.

**** SECTION 13 - DISPOSAL CONSIDERATIONS ****

Chemical waste generators must determine whether a discarded chemical

is classified as a hazardous waste.
US EPA guidelines for the classification determination are listed in 40 CFR Parts 261.3. Additionally, waste generators must consult state and local hazardous waste regulations to ensure complete and accurate classification.
RCRA P-Series: None listed.
RCRA U-Series: CAS# 7439-97-6: waste number U151.

**** SECTION 14 - TRANSPORT INFORMATION ****

US DOT
Shipping Name: RQ,MERCURY
Hazard Class: 8
UN Number: UN2809
Packing Group: III
Canadian TDG
Shipping Name: MERCURY
Hazard Class: 8
UN Number: UN2809

**** SECTION 15 - REGULATORY INFORMATION ****

US FEDERAL
TSCA
CAS# 7439-97-6 is listed on the TSCA inventory.
Health & Safety Reporting List
None of the chemicals are on the Health & Safety Reporting List.
Chemical Test Rules
None of the chemicals in this product are under a Chemical Test Rule.
Section 12b
None of the chemicals are listed under TSCA Section 12b.
TSCA Significant New Use Rule
None of the chemicals in this material have a SNUR under TSCA.
SARA
Section 302 (RQ)
CAS# 7439-97-6: final RQ = 1 pound (0.454 kg)
Section 302 (TPQ)
None of the chemicals in this product have a TPQ.
SARA Codes
CAS # 7439-97-6: acute, chronic.
Section 313
This chemical is not at a high enough concentration to be reportable under Section 313.
No chemicals are reportable under Section 313.
Clean Air Act:
CAS# 7439-97-6 listed as ** no name ** is listed as a hazardous air pollutant (HAP).
This material does not contain any Class 1 Ozone depletors.
This material does not contain any Class 2 Ozone depletors.
Clean Water Act:
None of the chemicals in this product are listed as Hazardous Substances under the CWA.
CAS# 7439-97-6 is listed as a Priority Pollutant under the Clean Water Act.
CAS# 7439-97-6 is listed as a Toxic Pollutant under the Clean Water Act.
OSHA:
None of the chemicals in this product are considered highly hazardous by OSHA.

STATE

Mercury can be found on the following state right to know lists: California, New Jersey, Florida, Pennsylvania, Minnesota, Massachusetts.

WARNING: This product contains Mercury, a chemical known to the state of California to cause birth defects or other reproductive harm.

California No Significant Risk Level:

None of the chemicals in this product are listed.

European/International Regulations

European Labeling in Accordance with EC Directives

Hazard Symbols: T N

Risk Phrases:

R 23 Toxic by inhalation.
R 33 Danger of cumulative effects.
R 50/53 Very toxic to aquatic organisms; may cause long-term adverse effects in the aquatic environment.

Safety Phrases:

S 1/2 Keep locked up and out of reach of children.
S 7 Keep container tightly closed.
S 45 In case of accident or if you feel unwell, seek medical advice immediately (show the label where possible).
S 60 This material and/or its container must be disposed of as hazardous waste.
S 61 Avoid release to the environment. Refer to special instructions/Safety data sheets.

WGK (Water Danger/Protection)

CAS# 7439-97-6: 3

United Kingdom Occupational Exposure Limits

CAS# 7439-97-6: OES-United Kingdom, TWA 0.025 mg/m3 TWA

Canada

CAS# 7439-97-6 is listed on Canada's DSL List.
This product has a WHMIS classification of D2A, E.
CAS# 7439-97-6 is listed on Canada's Ingredient Disclosure List.

Exposure Limits

CAS# 7439-97-6: OEL-ARAB Republic of Egypt:TWA 0.05 mg/m3
OEL-AUSTRALIA:TWA 0.1 mg/m3;Skin
OEL-BELGIUM:TWA 0.1 mg/m3;Skin
OEL-FINLAND:TWA 0.05 mg/m3
OEL-FRANCE:TWA 0.05 mg/m3;Skin (vapor)
OEL-FRANCE:TWA 0.1 mg/m3;Skin
OEL-HUNGARY:TWA 0.02 mg/m3;STEL 0.04 mg/m3
OEL-POLAND:TWA 0.05 mg/m3
OEL-SWEDEN:TWA 0.05 mg/m3 (vapor)
OEL-SWITZERLAND:TWA 0.005 ppm (0.05 mg/m3);Skin (vapor)
OEL-SWITZERLAND:TWA 0.01 mg/m3;Skin
OEL-TURKEY:TWA 0.1 mg/m3;Skin
OEL IN BULGARIA, COLOMBIA, JORDAN, KOREA check ACGIH TLV
OEL IN NEW ZEALAND, SINGAPORE, VIETNAM check ACGI TLV
OEL-AUSTRALIA:TWA 0.05 mg(Hg)/m3;Skin JANUARY 1993
OEL-BELGIUM:TWA 0.05 mg(Hg)/m3;Skin JANUARY 1993
OEL-CZECHOSLOVAKIA:TWA 0.05 mg(Hg)/m3;STEL 0.15 mg(Hg)/m3
OEL-DENMARK:TWA 0.05 mg(Hg)/m3 JANUARY 1993
OEL-FINLAND:TWA 0.05 mg(Hg)/m3 JANUARY 1993
OEL-FRANCE:TWA 0.05 mg(Hg)/m3 JANUARY 1993
OEL-GERMANY:TWA 0.01 ppm (0.1 mg(Hg)/m3) JANUARY 1993
OEL-HUNGARY:TWA 0.02 mg(Hg)/m3;STEL 0.04 mg(Hg)/m JANUARY 1993
OEL-JAPAN:TWA 0.05 mg(Hg)/m3 JANUARY 1993
OEL-THE NETHERLANDS:TWA 0.05 mg(Hg)/m3;STEL 0.15 mg(Hg)/m3

OEL-THE PHILIPPINES:TWA 0.05 mg(Hg)/m3 JANUARY 1993
OEL-POLAND:TWA 0.01 mg(Hg)/m3 JANUARY 1993
OEL-RUSSIA:TWA 0.05 mg(Hg

**** SECTION 16 - ADDITIONAL INFORMATION ****

MSDS Creation Date: 6/15/1999 Revision #4 Date: 10/06/2000

The information above is believed to be accurate and represents the best information currently available to us. However, we make no warranty of merchantability or any other warranty, express or implied, with respect to such information, and we assume no liability resulting from its use. Users should make their own investigations to determine the suitability of the information for their particular purposes. In no way shall the company be liable for any claims, losses, or damages of any third party or for lost profits or any special, indirect, incidental, consequential or exemplary damages, howsoever arising, even if the company has been advised of the possibility of such damages.

Fisher Scientific CANADA
A Fisher Scientific International Company

Ordering | Products | What's New | Support | Who We Are | Services | SEARCH | HOME Français

Catalogues
Frequently Asked Questions
Laboratory Vendor Links
Safety Vendor Links
Scratch and Dent Sales

**** SECTION 1 - CHEMICAL PRODUCT AND COMPANY IDENTIFICATION ****

MSDS Name: Silver
Catalog Numbers:
S80162, S163 10, S163-10, S16310, ZZS166C17
Synonyms:
Argentum.
Company Identification: Fisher Scientific
1 Reagent Lane
Fairlawn, NJ 07410
For information, call: 201-796-7100
Emergency Number: 201-796-7100
For CHEMTREC assistance, call: 800-424-9300
For International CHEMTREC assistance, call: 703-527-3887

**** SECTION 2 - COMPOSITION, INFORMATION ON INGREDIENTS ****

CAS#	Chemical Name	%	EINECS#
7440-22-4	Silver	100	231-131-3

Hazard Symbols: None Listed.
Risk Phrases: 33

**** SECTION 3 - HAZARDS IDENTIFICATION ****

EMERGENCY OVERVIEW

Appearance: white.
Caution! May cause eye and skin irritation. May cause respiratory and digestive tract irritation. Danger of cumulative effects.
Target Organs: Kidneys.

Potential Health Effects

Eye:
May cause eye irritation.

Skin:
May cause skin irritation. May cause skin discoloration.

Ingestion:
May cause irritation of the digestive tract. Effects may be cumulative. Ingestion of silver compounds may cause abdominal pain, rigidity, convulsions and shock.

Inhalation:
May cause respiratory tract irritation. Inhalation of fumes may cause metal fume fever, which is characterized by flu-like symptoms with metallic taste, fever, chills, cough, weakness, chest pain, muscle pain and increased white blood cell count.

Chronic:
Chronic inhalation or ingestion of silver salts may cause argyria characterized by a permanent blue-gray discoloration of the eyes, skin, mucous membranes, and internal organs.

**** SECTION 4 - FIRST AID MEASURES ****

Eyes:
Flush eyes with plenty of water for at least 15 minutes, occasionally lifting the upper and lower eyelids. If irritation develops, get medical aid.

Skin:
Flush skin with plenty of soap and water for at least 15 minutes while removing contaminated clothing and shoes. Get medical aid if irritation develops or persists. Wash clothing before reuse.

Ingestion:
Do NOT induce vomiting. If conscious and alert, rinse mouth and drink 2-4 cupfuls of milk or water. Wash mouth out with water. Get medical aid if irritation or symptoms occur.

Inhalation:
Remove from exposure to fresh air immediately. If not breathing, give artificial respiration. If breathing is difficult, give oxygen. Get medical aid if cough or other symptoms appear.

Notes to Physician:
Treat symptomatically and

**** SECTION 5 - FIRE FIGHTING MEASURES ****

General Information:
As in any fire, wear a self-contained breathing apparatus in pressure-demand, MSHA/NIOSH (approved or equivalent), and full protective gear. During a fire, irritating and highly toxic gases may be generated by thermal decomposition or combustion. Non-combustible, substance itself does not burn but may decompose upon heating to produce corrosive and/or toxic fumes.

Extinguishing Media:
Substance is noncombustible; use agent most appropriate to extinguish surrounding fire. Use water spray, dry chemical, carbon dioxide, or appropriate foam.

Autoignition Temperature: Not applicable.
Flash Point: Not applicable.
Explosion Limits, lower: Not available.
Explosion Limits, upper: Not available.
NFPA Rating: (estimated) Health: 1; Flammability: 0; Reactivity: 0

**** SECTION 6 - ACCIDENTAL RELEASE MEASURES ****

General Information: Use proper personal protective equipment as indicated in Section 8.

Spills/Leaks:
Vacuum or sweep up material and place into a suitable disposal container. Clean up spills immediately, observing precautions in the Protective Equipment section. Avoid generating dusty conditions. Provide ventilation.

**** SECTION 7 - HANDLING and STORAGE ****

Handling:
Wash thoroughly after handling. Wash hands before eating. Avoid contact with eyes, skin, and clothing. Keep container tightly closed. Avoid ingestion and inhalation. Use with adequate ventilation.

Storage:

Store in a tightly closed container. Store in a cool, dry, well-ventilated area away from incompatible substances. No special precautions indicated.

**** SECTION 8 - EXPOSURE CONTROLS, PERSONAL PROTECTION ****

Engineering Controls:

Facilities storing or utilizing this material should be equipped with an eyewash facility and a safety shower. Use adequate ventilation to keep airborne concentrations low.

Exposure Limits

Chemical Name	ACGIH	NIOSH	OSHA - Final PELs
Silver	0.1 mg/m3	as Ag: 0.01 mg/m3 TWA as Ag: 10 mg/m3 IDLH	0.01 mg/m3 TWA

OSHA Vacated PELs:

Silver:

as Ag: 0.01 mg/m3 TWA

Personal Protective Equipment

Eyes:

Wear appropriate protective eyeglasses or chemical safety goggles as described by OSHA's eye and face protection regulations in 29 CFR 1910.133 or European Standard EN166.

Skin:

Wear appropriate protective gloves to prevent skin exposure.

Clothing:

Wear appropriate protective clothing to minimize contact with skin.

Respirators:

A respiratory protection program that meets OSHA's 29 CFR :1910.134 and ANSI Z88.2 requirements or European Standard EN 149 must be followed whenever workplace conditions warrant a respirator's use.

**** SECTION 9 - PHYSICAL AND CHEMICAL PROPERTIES ****

Physical State:	Solid
Appearance:	white
Odor:	none reported
pH:	Not available.
Vapor Pressure:	100 mm Hg @ 1865 C
Vapor Density:	Not available.
Evaporation Rate:	Not applicable.
Viscosity:	Not available.
Boiling Point:	2212 deg C
Freezing/Melting Point:	961 deg C
Decomposition Temperature:	Not available.
Solubility in water:	Insoluble in water.

Specific Gravity/Density: 10.5
Molecular Formula: Ag
Molecular Weight: 107.8682

**** SECTION 10 - STABILITY AND REACTIVITY ****

Chemical Stability:
Stable under normal temperatures and pressures.
Conditions to Avoid:
Incompatible materials, exposure to air.
Incompatibilities with Other Materials:
Strong acids, strong bases, ethyleneimine.
Hazardous Decomposition Products:
Irritating and toxic fumes and gases, silver fumes.
Hazardous Polymerization: Has not been reported.

**** SECTION 11 - TOXICOLOGICAL INFORMATION ****

RTECS#:
CAS# 7440-22-4: VW3500000
LD50/LC50:
Not available.
Carcinogenicity:
Silver -
Not listed by ACGIH, IARC, NIOSH, NTP, or OSHA.
Epidemiology:
No data available.
Teratogenicity:
No data available.
Reproductive Effects:
No data available.
Neurotoxicity:
No data available.
Mutagenicity:
No data available.
Other Studies:
See actual entry in RTECS for complete information.

**** SECTION 12 - ECOLOGICAL INFORMATION ****

Other
For more information, see "HANDBOOK OF ENVIRONMENTAL FATE AND EXPOSURE DATA."

**** SECTION 13 - DISPOSAL CONSIDERATIONS ****

Chemical waste generators must determine whether a discarded chemical is classified as a hazardous waste.
US EPA guidelines for the classification determination are listed in 40 CFR Parts 261.3. Additionally, waste generators must consult state and local hazardous waste regulations to ensure complete and accurate classification.
RCRA P-Series: None listed.
RCRA U-Series: None listed.

**** SECTION 14 - TRANSPORT INFORMATION ****

US DOT

No information available
Canadian TDG
No information available.

**** SECTION 15 - REGULATORY INFORMATION ****

US FEDERAL
TSCA
CAS# 7440-22-4 is listed on the TSCA inventory.
Health & Safety Reporting List
None of the chemicals are on the Health & Safety Reporting List.
Chemical Test Rules
None of the chemicals in this product are under a Chemical Test Rule.
Section 12b
None of the chemicals are listed under TSCA Section 12b.
TSCA Significant New Use Rule
None of the chemicals in this material have a SNUR under TSCA.
SARA
Section 302 (RQ)
CAS# 7440-22-4: final RQ = 1000 pounds (454 kg) (no reporting of relea
Section 302 (TPQ)
None of the chemicals in this product have a TPQ.
SARA Codes
CAS # 7440-22-4: chronic, flammable.
Section 313
This material contains Silver (CAS# 7440-22-4, 100%),which is subject to the reporting requirements of Section 313 of SARA Title III and 40 CFR Part 372.
Clean Air Act:
This material does not contain any hazardous air pollutants.
This material does not contain any Class 1 Ozone depletors.
This material does not contain any Class 2 Ozone depletors.
Clean Water Act:
None of the chemicals in this product are listed as Hazardous Substances under the CWA.
CAS# 7440-22-4 is listed as a Priority Pollutant under the Clean Water Act.
CAS# 7440-22-4 is listed as a Toxic Pollutant under the Clean Water Act.
OSHA:
None of the chemicals in this product are considered highly hazardous by OSHA.
STATE
Silver can be found on the following state right to know lists:
California, New Jersey, Florida, Pennsylvania, Minnesota, Massachusetts.
California No Significant Risk Level:
None of the chemicals in this product are listed.
European/International Regulations
European Labeling in Accordance with EC Directives
Hazard Symbols: Not available.
Risk Phrases:
R 33 Danger of cumulative effects.
Safety Phrases:
S 28A After contact with skin, wash immediately with plenty of water.
S 37 Wear suitable gloves.
S 45 In case of accident or if you feel unwell, seek medical advice immediately (show the label where

possible).
WGK (Water Danger/Protection)
CAS# 7440-22-4: 0
United Kingdom Occupational Exposure Limits
CAS# 7440-22-4: OES-United Kingdom, TWA 0.1 mg/m3 TWA

Canada
CAS# 7440-22-4 is listed on Canada's DSL List.
This product has a WHMIS classification of D2A.
CAS# 7440-22-4 is listed on Canada's Ingredient Disclosure List.
Exposure Limits
CAS# 7440-22-4: OEL-AUSTRALIA:TWA 0.1 mg/m3
OEL-BELGIUM:TWA 0.1 mg/m3
OEL-DENMARK:TWA 0.01 mg/m3
OEL-FINLAND:TWA 0.1 mg/m3
OEL-FRANCE:TWA 0.1 mg/m3
OEL-GERMANY:TWA 0.01 mg/m3
OEL-RUSSIA:STEL 1 mg/m3
OEL-SWITZERLAND:TWA 0.01 mg/m3
OEL-UNITED KINGDOM:TWA 0.1 mg/m3
OEL IN BULGARIA, COLOMBIA, JORDAN, KOREA check ACGIH TLV
OEL IN NEW ZEALAND, SINGAPORE, VIETNAM check ACGI TLV

**** SECTION 16 - ADDITIONAL INFORMATION ****

MSDS Creation Date: 12/12/1997 Revision #5 Date: 8/02/2000

The information above is believed to be accurate and represents the best information currently available to us. However, we make no warranty of merchantability or any other warranty, express or implied, with respect to such information, and we assume no liability resulting from its use. Users should make their own investigations to determine the suitability of the information for their particular purposes. In no way shall the company be liable for any claims, losses, or damages of any third party or for lost profits or any special, indirect, incidental, consequential or exemplary damages, howsoever arising, even if the company has been advised of the possibility of such damages.

Please reduce your browser font size for better viewing and printing.

MSDS Material Safety Data Sheet

24 Hour Emergency Telephone: 908-859-2151
CHEMTREC: 1-800-424-9300

National Response in Canada
CANUTEC: 613-996-6666

Outside U.S. and Canada
Chemtrec: 202-483-7616

NOTE: CHEMTREC, CANUTEC and National Response Center emergency numbers to be used only in the event of chemical emergencies involving a spill, leak, fire, exposure or accident involving chemicals.

From: Mallinckrodt Baker, Inc.
222 Red School Lane
Phillipsburg, NJ 08865

MALLINCKRODT J.T.Baker

All non-emergency questions should be directed to Customer Service (1-800-582-2537) for assistance.

ACETONE

MSDS Number: A0446 — ***Effective Date: 04/09/98***

1. Product Identification

Synonyms: Dimethylketone; 2-propanone; dimethylketal
CAS No.: 67-64-1
Molecular Weight: 58.08
Chemical Formula: (CH3)2CO
Product Codes:
J.T. Baker: 5356, 5580, 5805, 9001, 9002, 9003, 9004, 9005, 9006, 9007, 9008, 9009, 9010, 9015, 9036, 9125, 9254, 9271, A134
Mallinckrodt: 0018, 2432, 2435, 2437, 2438, 2440, 2443, 2445, 2850, H451, H580, H981

2. Composition/Information on Ingredients

Ingredient	CAS No	Percent	Hazardous
Acetone	67-64-1	99 - 100%	Yes

3. Hazards Identification

Emergency Overview

DANGER! EXTREMELY FLAMMABLE LIQUID AND VAPOR. VAPOR MAY CAUSE FLASH FIRE. HARMFUL IF SWALLOWED OR INHALED. CAUSES IRRITATION TO SKIN, EYES AND RESPIRATORY TRACT. AFFECTS CENTRAL NERVOUS SYSTEM.

J.T. Baker SAF-T-DATA(tm) Ratings (Provided here for your convenience)

Health Rating: 1 - Slight
Flammability Rating: 4 - Extreme (Flammable)
Reactivity Rating: 2 - Moderate
Contact Rating: 1 - Slight
Lab Protective Equip: GOGGLES; LAB COAT; VENT HOOD; PROPER GLOVES; CLASS B EXTINGUISHER
Storage Color Code: Red (Flammable)

Potential Health Effects

Inhalation:
Inhalation of vapors irritates the respiratory tract. May cause coughing, dizziness, dullness, and headache. Higher

Ingestion:
Swallowing small amounts is not likely to produce harmful effects. Ingestion of larger amounts may produce abdominal pain, nausea and vomiting. Aspiration into lungs can produce severe lung damage and is a medical emergency. Other symptoms are expected to parallel inhalation.
Skin Contact:
Irritating due to defatting action on skin. Causes redness, pain, drying and cracking of the skin.
Eye Contact:
Vapors are irritating to the eyes. Splashes may cause severe irritation, with stinging, tearing, redness and pain.
Chronic Exposure:
Prolonged or repeated skin contact may produce severe irritation or dermatitis.
Aggravation of Pre-existing Conditions:
Use of alcoholic beverages enhances toxic effects. Exposure may increase the toxic potential of chlorinated hydrocarbons, such as chloroform, trichloroethane.

---

4. First Aid Measures

Inhalation:
Remove to fresh air. If not breathing, give artificial respiration. If breathing is difficult, give oxygen. Get medical attention.
Ingestion:
Aspiration hazard. If swallowed, vomiting may occur spontaneously, but DO NOT INDUCE. If vomiting occurs, keep head below hips to prevent aspiration into lungs. Never give anything by mouth to an unconscious person. Call a physician immediately.
Skin Contact:
Immediately flush skin with plenty of water for at least 15 minutes. Remove contaminated clothing and shoes. Get medical attention. Wash clothing before reuse. Thoroughly clean shoes before reuse.
Eye Contact:
Immediately flush eyes with plenty of water for at least 15 minutes, lifting upper and lower eyelids occasionally. Get medical attention.

---

5. Fire Fighting Measures

Fire:
Flash point: -20C (-4F) CC
Autoignition temperature: 465C (869F)
Flammable limits in air % by volume:
lel: 2.5; uel: 12.8
Extremely Flammable Liquid and Vapor! Vapor may cause flash fire.
Explosion:
Above flash point, vapor-air mixtures are explosive within flammable limits noted above. Vapors can flow along surfaces to distant ignition source and flash back. Contact with strong oxidizers may cause fire. Sealed containers may rupture when heated. This material may produce a floating fire hazard. Sensitive to static discharge.
Fire Extinguishing Media:
Dry chemical, alcohol foam or carbon dioxide. Water may be ineffective. Water spray may be used to keep fire exposed containers cool, dilute spills to nonflammable mixtures, protect personnel attempting to stop leak and disperse vapors.
Special Information:
In the event of a fire, wear full protective clothing and NIOSH-approved self-contained breathing apparatus with full facepiece operated in the pressure demand or other positive pressure mode.

---

6. Accidental Release Measures

Ventilate area of leak or spill. Remove all sources of ignition. Wear appropriate personal protective equipment as specified in Section 8. Isolate hazard area. Keep unnecessary and unprotected personnel from entering. Contain and recover liquid when possible. Use non-sparking tools and equipment. Collect liquid in an appropriate container or absorb with an inert material (e. g., vermiculite, dry sand, earth), and place in a chemical waste container. Do not use combustible materials, such as saw dust. Do not flush to sewer! If a leak or spill has not ignited, use water spray to disperse the vapors, to protect personnel attempting to stop leak, and to flush spills away from exposures. US Regulations (CERCLA) require reporting spills and releases to soil, water and air in excess of reportable quantities. The toll free number for the US Coast Guard National Response Center is (800) 424-8802.

J. T. Baker SOLUSORB(R) solvent adsorbent is recommended for spills of this product.

---

7. Handling and Storage

be acute. Outside or detached storage is preferred. Separate from incompatibles. Containers should be bonded and grounded for transfers to avoid static sparks. Storage and use areas should be No Smoking areas. Use non-sparking type tools and equipment, including explosion proof ventilation. Containers of this material may be hazardous when empty since they retain product residues (vapors, liquid); observe all warnings and precautions listed for the product.

8. Exposure Controls/Personal Protection

Airborne Exposure Limits:
Acetone:
-OSHA Permissible Exposure Limit (PEL):
1000 ppm (TWA)

-ACGIH Threshold Limit Value (TLV):
500 ppm (TWA), 750 ppm (STEL) A4 - not classifiable as a human carcinogen
Ventilation System:
A system of local and/or general exhaust is recommended to keep employee exposures below the Airborne Exposure Limits. Local exhaust ventilation is generally preferred because it can control the emissions of the contaminant at its source, preventing dispersion of it into the general work area. Please refer to the ACGIH document, *Industrial Ventilation, A Manual of Recommended Practices*, most recent edition, for details.
Personal Respirators (NIOSH Approved):
If the exposure limit is exceeded, a half-face organic vapor respirator may be worn for up to ten times the exposure limit or the maximum use concentration specified by the appropriate regulatory agency or respirator supplier, whichever is lowest. A full-face piece organic vapor respirator may be worn up to 50 times the exposure limit or the maximum use concentration specified by the appropriate regulatory agency or respirator supplier, whichever is lowest. For emergencies or instances where the exposure levels are not known, use a full-face piece positive-pressure, air-supplied respirator. WARNING: Air-purifying respirators do not protect workers in oxygen-deficient atmospheres.
Skin Protection:
Wear impervious protective clothing, including boots, gloves, lab coat, apron or coveralls, as appropriate, to prevent skin contact.
Eye Protection:
Use chemical safety goggles and/or a full face shield where splashing is possible. Maintain eye wash fountain and quick-drench facilities in work area.

9. Physical and Chemical Properties

Appearance:
Clear, colorless, volatile liquid.
Odor:
Fragrant, mint-like
Solubility:
Miscible in all proportions in water.
Specific Gravity:
0.79 @ 20C/4C
pH:
No information found.
% Volatiles by volume @ 21C (70F):
100
Boiling Point:
56.5C (133F) @ 760 mm Hg
Melting Point:
-95C (-139F)
Vapor Density (Air=1):
2.0
Vapor Pressure (mm Hg):
400 @ 39.5C (104F)
Evaporation Rate (BuAc=1):
ca. 7.7

10. Stability and Reactivity

Stability:
Stable under ordinary conditions of use and storage.
Hazardous Decomposition Products:
Carbon dioxide and carbon monoxide may form when heated to decomposition.
Hazardous Polymerization:
Will not occur.

Concentrated nitric and sulfuric acid mixtures, oxidizing materials, chloroform, alkalis, chlorine compounds, acids, potassium t-butoxide.
Conditions to Avoid:
Heat, flames, ignition sources and incompatibles.

11. Toxicological Information

Oral rat LD50: 5800 mg/kg; Inhalation rat LC50: 50,100mg/m3; Irritation eye rabbit, Standard Draize, 20 mg severe; investigated as a tumorigen, mutagen, reproductive effector.

--------\Cancer Lists\----------

Ingredient	---NTP Carcinogen--- Known	Anticipated	IARC Category
Acetone (67-64-1)	No	No	None

12. Ecological Information

Environmental Fate:
When released into the soil, this material is expected to readily biodegrade. When released into the soil, this material is expected to leach into groundwater. When released into the soil, this material is expected to quickly evaporate. When released into water, this material is expected to readily biodegrade. When released to water, this material is expected to quickly evaporate. This material has a log octanol-water partition coefficient of less than 3.0. This material is not expected to significantly bioaccumulate. When released into the air, this material may be moderately degraded by reaction with photochemically produced hydroxyl radicals. When released into the air, this material may be moderately degraded by photolysis. When released into the air, this material is expected to be readily removed from the atmosphere by wet deposition.
Environmental Toxicity:
This material is not expected to be toxic to aquatic life. The LC50/96-hour values for fish are over 100 mg/l.

13. Disposal Considerations

Whatever cannot be saved for recovery or recycling should be handled as hazardous waste and sent to a RCRA approved incinerator or disposed in a RCRA approved waste facility. Processing, use or contamination of this product may change the waste management options. State and local disposal regulations may differ from federal disposal regulations. Dispose of container and unused contents in accordance with federal, state and local requirements.

14. Transport Information

Domestic (Land, D.O.T.)

Proper Shipping Name: ACETONE
Hazard Class: 3
UN/NA: UN1090
Packing Group: II
Information reported for product/size: 350LB

International (Water, I.M.O.)

Proper Shipping Name: ACETONE
Hazard Class: 3.1
UN/NA: UN1090
Packing Group: II
Information reported for product/size: 350LB

15. Regulatory Information

--------\Chemical Inventory Status - Part 1\----------

Ingredient	TSCA	EC	Japan	Australia

Acetone (67-64-1)	Yes	Yes	Yes	Yes

--------\Chemical Inventory Status - Part 2\--------

Ingredient	Korea	--Canada-- DSL	NDSL	Phil.
Acetone (67-64-1)	Yes	Yes	No	Yes

--------\Federal, State & International Regulations - Part 1\--------

Ingredient	-SARA 302- RQ	TPQ	------SARA 313------ List	Chemical Catg.
Acetone (67-64-1)	No	No	Yes	No

--------\Federal, State & International Regulations - Part 2\--------

Ingredient	CERCLA	-RCRA- 261.33	-TSCA- 8(d)
Acetone (67-64-1)	5000	U002	No

Chemical Weapons Convention: No TSCA 12(b): Yes CDTA: Yes
SARA 311/312: Acute: Yes Chronic: No Fire: Yes Pressure: No
Reactivity: No (Pure / Liquid)

Australian Hazchem Code: 2[Y]E
Poison Schedule: No information found.
WHMIS:
This MSDS has been prepared according to the hazard criteria of the Controlled Products Regulations (CPR) and the MSDS contains all of the information required by the CPR.

---

16. Other Information

NFPA Ratings: Health: 1 Flammability: 3 Reactivity: 0
Label Hazard Warning:
DANGER! EXTREMELY FLAMMABLE LIQUID AND VAPOR. VAPOR MAY CAUSE FLASH FIRE. HARMFUL IF SWALLOWED OR INHALED. CAUSES IRRITATION TO SKIN, EYES AND RESPIRATORY TRACT. AFFECTS CENTRAL NERVOUS SYSTEM.
Label Precautions:
Keep away from heat, sparks and flame.
Keep container closed.
Use only with adequate ventilation.
Wash thoroughly after handling.
Avoid breathing vapor.
Avoid contact with eyes, skin and clothing.
Label First Aid:
Aspiration hazard. If swallowed, vomiting may occur spontaneously, but DO NOT INDUCE. If vomiting occurs, keep head below hips to prevent aspiration into lungs. Never give anything by mouth to an unconscious person. Call a physician immediately. If inhaled, remove to fresh air. If not breathing, give artificial respiration. If breathing is difficult, give oxygen. In case of contact, immediately flush eyes or skin with plenty of water for at least 15 minutes. Remove contaminated clothing and shoes. Wash clothing before reuse. In all cases, get medical attention.
Product Use:
Laboratory Reagent.
Revision Information:
MSDS Section(s) changed since last revision of document include: 8.
Disclaimer:
****
Mallinckrodt Baker, Inc. provides the information contained herein in good faith but makes no representation as to its comprehensiveness or accuracy. This document is intended only as a guide to the appropriate precautionary handling of the material by a properly trained person using this product. Individuals receiving the information must exercise their independent judgment in determining its appropriateness for a particular purpose. MALLINCKRODT BAKER, INC. MAKES NO REPRESENTATIONS OR WARRANTIES, EITHER EXPRESS OR IMPLIED, INCLUDING WITHOUT LIMITATION ANY WARRANTIES OF MERCHANTABILITY, FITNESS FOR A PARTICULAR PURPOSE WITH RESPECT TO THE INFORMATION SET FORTH HEREIN OR THE PRODUCT TO WHICH THE INFORMATION REFERS. ACCORDINGLY, MALLINCKRODT BAKER, INC. WILL NOT BE RESPONSIBLE FOR DAMAGES RESULTING FROM USE OF OR RELIANCE UPON THIS INFORMATION.
****
Prepared by: Strategic Services Division
Phone Number: (314) 539-1600 (U.S.A.)

MATERIAL SAFETY DATA SHEET (MSDS)

MATERIAL SAFETY DATA SHEET

EM SCIENCE

1. CHEMICAL PRODUCT AND COMPANY IDENTIFICATION

Manufacturer.....:
EM SCIENCE
A Division of EM Industries
P.O. Box 70
480 Democrat Road
Gibbstown, N.J. 08027

Preparation Date.: 6/6/97

Information Phone Number.: 856-423-6300
Hours: Mon. to Fri. 8:30-5
Chemtrec Emergency Number: 800-424-9300
Hours: 24 hrs a day

Catalog Number(s):

0138658D BX1670 BX1673 MX1034

Product Name:
2-Butanone
Synonyms:
Methyl Ethyl Ketone
Chemical Family:
Ketone
Formula:
$CH_3COCH_2CH_3$
Molecular Weight.:
72.11

2. COMPOSITION / INFORMATION ON INGREDIENTS

Component	CAS #	Appr %
2-Butanone	78-93-3	100%

3. HAZARDS IDENTIFICATION

EMERGENCY OVERVIEW
FLAMMABLE LIQUID AND VAPOR.
Vapor Irritating To Eyes And Respiratory Passages.
Liquid Irritating To Eyes.
MAY CAUSE EYE INJURY.
MAY CAUSE SKIN IRRITATION.
May Cause Damage To Lungs And Central Nervous System.

Appearance:
Colorless liquid, sharp, mint-like odor

POTENTIAL HEALTH EFFECTS (ACUTE AND CHRONIC)

Symptoms of Exposure:
Vapor irritating to eyes and respiratory passages. Liquid irritating to eyes; may cause eye injury. Prolonged or repeated skin contact may cause irritation. Inhalation of high concentrations may cause headache, dizziness, nausea, narcosis, lung damage. Prolonged exposure may produce central nervous system depression and narcosis.

Medical Cond. Aggravated by Exposure:
Respiratory conditions

Routes of Entry:
Inhalation, ingestion

Carcinogenicity:
The material is not listed (IARC, NTP, OSHA) as cancer causing agent.

4. FIRST AID MEASURES

Emergency First Aid:
GET MEDICAL ASSISTANCE FOR ALL CASES OF OVEREXPOSURE.
Skin: Wash thoroughly with soap and water.
Eyes: Immediately flush thoroughly with water for at least 15 minutes.
Inhalation: Remove to fresh air; give artificial respiration if breathing has stopped.
Ingestion: Do not induce vomiting; get immediate medical attention.

5. FIRE FIGHTING MEASURES

Flash Point (F): 21F (tcc)
Flammable Limits LEL (%): 1.80
Flammable Limits UEL (%): 11.50
Extinguishing Media:
Water spray, "alcohol" foam, dry chemical, CO_2

Fire Fighting Procedures:
Wear self-contained breathing apparatus.

Fire & Explosion Hazards:
Vapor can travel distances to ignition source and flash back.

6. ACCIDENTAL RELEASE MEASURES

Spill Response:
Evacuate the area of all unnecessary personnel. Wear suitable protective equipment listed under Exposure / Personal Protection. Eliminate any ignition sources until the area is determined to be free from explosion or fire hazards. Contain the release and eliminate its source, if this can be done without risk. Take up and containerize for proper disposal as described under Disposal. Comply with Federal, State, and local regulations on reporting releases. Refer to Regulatory Information for reportable quantity and other regulatory data.
EM SCIENCE recommends Spill-X absorbent agents for various types of spills. Additional information on the Spill-X products can be provided through the EM SCIENCE Technical Service Department (609) 423-6300. The following EM SCIENCE Spill-X absorbent is recommended for this product:

SX0863 Solvent Spill Treatment Kit

7. HANDLING AND STORAGE

Handling & Storage:
Keep container tightly closed. Store in a cool area away from ignition sources and oxidizers. Electrically ground all equipment when handling this product. Do not breathe vapor. Do not get in eyes, on skin, or on clothing. Retained residue may make empty containers hazardous; use caution!

8. EXPOSURE CONTROLS / PERSONAL PROTECTION

ENGINEERING CONTROLS AND PERSONAL PROTECTIVE EQUIPMENT:
Ventilation, Respiratory Protection, Protective Clothing, Eye Protection:
Material should be handled or transferred in an approved fume hood or with adequate ventilation. Protective gloves (Butyl rubber, Polyurethane or equivalent) should be worn to prevent skin contact. Safety glasses with side shields must be worn all times.

Work/Hygenic Practices:
Wash thoroughly after handling. Do not take internally. Eye wash and safety equipment should be readily available.

EXPOSURE GUIDELINES

OSHA - PEL:

	TWA		STEL		CL		
Component	PPM	MG/M3	PPM	MG/M3	PPM	MG/M3	Skin
2-Butanone	200	590	300	885			

ACGIH - TLV:

	TWA		STEL		CL		
Component	PPM	MG/M3	PPM	MG/M3	PPM	MG/M3	Skin
2-Butanone	200	590	300	885			

If there are no exposure limit numbers listed in the Exposure Guidelines chart, this indicates that no OSHA or ACGIH exposure limts have been established.

9. PHYSICAL AND CHEMCIAL PROPERTIES

Boiling Point (C 760 mmHg) : 80C
Melting Point (C) : -86C
Specific Gravity (H_20 = 1) : 0.805
Vapor Pressure (mm Hg) : 75 20C
Percent Volatile by vol (%): 99+%
Vapor Density (Air = 1) : 2.5
Evaporation Rate (BuAc = 1): 3.8
Solubility in Water (%) : 27%
Appearance :
Colorless liquid, sharp, mint-like odor

10. STABILITY AND REACTIVITY

Stability: Yes

Hazardous Polymerization:
Does not occur

Hazardous Decomposition:
CO_x, peroxides

Conditions to Avoid:
Heat; contact with ignition source

Materials To Avoid:

```
( ) Water
(X) Acids
(X) Bases
( ) Corrosives
(X) Oxidizers
(X) Other: Potassium t-butoxide, alkaline materials,
halogens, hydrogen  peroxide and nitric acid, haloforms
and strong bases,  2-Propanol
```

11. TOXICOLOGICAL INFORMATION

Toxicity Data

```
orl-rat LD50: 2737 mg/kg   skn-rbt LD50: 6480 mg/kg
ihl-mus LC50: 40 g/cu.m./2H
```

Toxicological Findings:
Laboratory rats exposed by inhalation to over 1000 ppm for most of their pregnancy period exhibited minor embryotoxic/fetotoxic

effects.
Tests on laboratory animals indicate material may produce
adverse mutagenic effects.
Cited in Registry of Toxic Effects of Chemical Substances (RTECS)

12. DISPOSAL CONSIDERATIONS

EPA Waste Numbers: U159 D001 D035

Treatment:
Specified Technology - Incineration or fuels blending to less than the TCLP standard. Contact your local permitted waste disposal site (TSD) for permissible treatment sites.
ALWAYS CONTACT A PERMITTED WASTE DISPOSER (TSD) TO ASSURE COMPLIANCE WITH ALL CURRENT LOCAL, STATE AND FEDERAL REGULATIONS.

|13. TRANSPORT INFORMATION

DOT Proper Shipping Name:
Methyl Ethyl Ketone (for BX1670, BX1673, MX1034)
Ethyl Methyl Ketone (for 0138658D)
DOT ID Number :
UN1193

14. REGULATORY INFORMATION

TSCA Statement:
The CAS number of this product is listed on the TSCA Inventory.

Component	SARA EHS (302)	SARA EHS TPQ (lbs)	CERCLA RQ (lbs)
2-Butanone			5000

Component	OSHA Floor List	SARA 313	DeMinimis for SARA 313 (%)
2-Butanone	Y	Y	1.0

If there is no information listed on the regulatory information chart, this indicates that the chemical is not covered by the specific regulation listed.

15. OTHER INFORMATION

Comments:

None

NFPA Hazard Ratings:

```
Health          : 1
Flammability    : 3
Reactivity      : 0
Special Hazards :
```

Revision History: 11/1/81 10/1/83 5/6/86 6/30/87 10/27/87 1/8/88 5/8/89 3/1/91 1/4/96

| = Revised Section

N/A = Not Available

N/E = None Establised

The statements contained herein are offered for informational purposes only and are based upon technical data that EM Science believes to be accurate. It is intended for use only by persons having the necessary technical skill and at their own discretion and risk. Since conditions and manner of use are outside our control, we make NO WARRANTY, EXPRESS OR IMPLIED, OR MERCHANTABILITY, FITNESS OR OTHERWISE.

MSDS - METHYLENE CHLORIDE

1 - PRODUCT IDENTIFICATION

PRODUCT NAME: METHYLENE CHLORIDE
FORMULA: CH2CL2
FORMULA WT: 84.93
CAS NO.: 75-09-2
NIOSH/RTECS NO.: PA8050000
COMMON SYNONYMS: DICHLOROMETHANE; METHYLENE DICHLORIDE; METHANE DICHLORIDE
PRODUCT CODES: 9324,9341,Q480,9330,5378,5531,9315,9329,9264
EFFECTIVE: 10/24/86
REVISION #03

PRECAUTIONARY LABELLING

BAKER SAF-T-DATA(TM) SYSTEM

HEALTH	-	3	SEVERE (CANCER CAUSING)
FLAMMABILITY	-	1	SLIGHT
REACTIVITY	-	1	SLIGHT
CONTACT	-	2	MODERATE

HAZARD RATINGS ARE 0 TO 4 (0 = NO HAZARD; 4 = EXTREME HAZARD).

LABORATORY PROTECTIVE EQUIPMENT

GOGGLES & SHIELD; LAB COAT & APRON; VENT HOOD; PROPER GLOVES

PRECAUTIONARY LABEL STATEMENTS

POISON DANGER
CAUSES IRRITATION
HARMFUL IF ABSORBED THROUGH SKIN
MAY BE FATAL IF SWALLOWED OR INHALED
NOTE: REPORTED AS CAUSING CANCER IN LABORATORY ANIMALS. EXERCISE DUE CARE.
AVOID CONTACT WITH EYES, SKIN, CLOTHING.
KEEP IN TIGHTLY CLOSED CONTAINER. WASH THOROUGHLY AFTER HANDLING.

SAF-T-DATA(TM) STORAGE COLOR CODE: BLUE (HEALTH)

2 - HAZARDOUS COMPONENTS

COMPONENT	%	CAS NO.
METHYLENE CHLORIDE	90-100	75-09-2

3 - PHYSICAL DATA

BOILING POINT: 40 C (104 F)
VAPOR PRESSURE(MM HG): 350

MELTING POINT: -95 C (-139 F)
VAPOR DENSITY(AIR=1): 2.9

SPECIFIC GRAVITY: 1.32 (H2O=1)
EVAPORATION RATE: 27.5 (BUTYL ACETATE=1)

SOLUBILITY(H2O): MODERATE (1 TO 10 %)
% VOLATILES BY VOLUME: 100

APPEARANCE & ODOR: COLORLESS,VOLATILE LIQUID WITH PENETRATING,ETHER-LIKE ODOR.

---

4 - FIRE AND EXPLOSION HAZARD DATA

FLASH POINT (CLOSED CUP N/A NFPA 704M RATING: 2-1-0

FLAMMABLE LIMITS: UPPER - 19 % LOWER - 12 %

FIRE EXTINGUISHING MEDIA
USE EXTINGUISHING MEDIA APPROPRIATE FOR SURROUNDING FIRE.

SPECIAL FIRE-FIGHTING PROCEDURES
FIREFIGHTERS SHOULD WEAR PROPER PROTECTIVE EQUIPMENT AND SELF-CONTAINED BREATHING APPARATUS WITH FULL FACEPIECE OPERATED IN POSITIVE PRESSURE MODE. MOVE CONTAINERS FROM FIRE AREA IF IT CAN BE DONE WITHOUT RISK. USE WATER TO KEEP FIRE-EXPOSED CONTAINERS COOL.

UNUSUAL FIRE & EXPLOSION HAZARDS
CLOSED CONTAINERS EXPOSED TO HEAT MAY EXPLODE.

TOXIC GASES PRODUCED
HYDROGEN CHLORIDE, PHOSGENE, CARBON MONOXIDE, CARBON DIOXIDE

---

5 - HEALTH HAZARD DATA

ACGIH DENOTES THAT THIS SUBSTANCE IS SUSPECT OF CARCINOGENIC POTENTIAL FOR MAN.

THRESHOLD LIMIT VALUE (TLV/TWA): 350 MG/M3 (100 PPM)

SHORT-TERM EXPOSURE LIMIT (STEL): 1740 MG/M3 (500 PPM)

PERMISSIBLE EXPOSURE LIMIT (PEL): MG/M3 (500 PPM)

TOXICITY:	LD50 (ORAL-RAT) (MG/KG)	-	2524
	LD50 (IPR-MOUSE) (MG/KG)	-	1500
	LD50 (SCU-MOUSE) (MG/KG)	-	6460
	LC50 (INHAL-RAT-) (G/M3)	-	88

CARCINOGENICITY: NTP: NO IARC: NO Z LIST: NO OSHA REG: NO

EFFECTS OF OVEREXPOSURE
INHALATION AND INGESTION ARE HARMFUL AND MAY BE FATAL.
INHALATION MAY CAUSE HEADACHE, NAUSEA, VOMITING, DIZZINESS, NARCOSIS, SUFFOCATION, LOWER BLOOD PRESSURE, CENTRAL NERVOUS SYSTEM DEPRESSION.
INHALATION OF VAPORS MAY CAUSE SEVERE IRRITATION OF THE RESPIRATORY SYSTEM.
LIQUID MAY BE IRRITATING TO SKIN AND EYES. PROLONGED SKIN CONTACT MAY RESULT IN DERMATITIS. EYE CONTACT MAY RESULT IN TEMPORARY CORNEAL DAMAGE.
INGESTION MAY CAUSE NAUSEA, VOMITING, GASTROINTESTINAL IRRITATION, AND BURNS TO MOUTH AND THROAT.

TARGET ORGANS
SKIN, CARDIOVASCULAR SYSTEM, CENTRAL NERVOUS SYSTEM, EYES

MEDICAL CONDITIONS GENERALLY AGGRAVATED BY EXPOSURE
NONE IDENTIFIED

ROUTES OF ENTRY
INHALATION, INGESTION, SKIN CONTACT, EYE CONTACT

EMERGENCY AND FIRST AID PROCEDURES

CALL A PHYSICIAN.
IF SWALLOWED, DO NOT INDUCE VOMITING.
IF INHALED, REMOVE TO FRESH AIR. IF NOT BREATHING, GIVE ARTIFICIAL RESPIRATION. IF BREATHING IS DIFFICULT, GIVE OXYGEN.
IN CASE OF CONTACT, IMMEDIATELY FLUSH EYES WITH PLENTY OF WATER FOR AT LEAST 15 MINUTES. FLUSH SKIN WITH WATER.

ACCEPTABLE MAXIMUM PEAK ABOVE THE ACCEPTANCE CEILING CONCENTRATION FOR AN 8 HOUR SHIFT = 2000 PPM FOR 5 MINUTES IN ANY 2HOURS. (PEL) CEILING = 1000 PPM

---

6 - REACTIVITY DATA

STABILITY: STABLE HAZARDOUS POLYMERIZATION: WILL NOT OCCUR

CONDITIONS TO AVOID: HEAT, FLAME, OTHER SOURCES OF IGNITION, MOISTURE

INCOMPATIBLES: ALKALI METALS, STRONG OXIDIZING AGENTS, STRONG BASES, OXIDES OF NITROGEN, ZINC, ALUMINUM, WATER, MAGNESIUM, AMINES

DECOMPOSITION PRODUCTS: HYDROGEN CHLORIDE, PHOSGENE, CARBON MONOXIDE, CARBON DIOXIDE

---

7 - SPILL AND DISPOSAL PROCEDURES

STEPS TO BE TAKEN IN THE EVENT OF A SPILL OR DISCHARGE

WEAR SELF-CONTAINED BREATHING APPARATUS AND FULL PROTECTIVE CLOTHING.
STOP LEAK IF YOU CAN DO SO WITHOUT RISK. USE WATER SPRAY TO REDUCE VAPORS.
TAKE UP WITH SAND OR OTHER NON-COMBUSTIBLE ABSORBENT MATERIAL AND PLACE INTO CONTAINER FOR LATER DISPOSAL. FLUSH SPILL AREA WITH WATER.

DISPOSAL PROCEDURE

DISPOSE IN ACCORDANCE WITH ALL APPLICABLE FEDERAL, STATE, AND LOCAL ENVIRONMENTAL REGULATIONS.

EPA HAZARDOUS WASTE NUMBER: U080 (TOXIC WASTE)

---

8 - PROTECTIVE EQUIPMENT

VENTILATION: USE GENERAL OR LOCAL EXHAUST VENTILATION TO MEET TLV REQUIREMENTS.

RESPIRATORY PROTECTION: RESPIRATORY PROTECTION REQUIRED IF AIRBORNE CONCENTRATION EXCEEDS TLV. AT CONCENTRATIONS ABOVE 100 PPM, A SELF-CONTAINED BREATHING APPARATUS IS ADVISED.

EYE/SKIN PROTECTION: SAFETY GOGGLES AND FACE SHIELD, UNIFORM, PROTECTIVE SUIT, POLYVINYL ALCOHOL GLOVES ARE RECOMMENDED.

---

9 - STORAGE AND HANDLING PRECAUTIONS

SAF-T-DATA(TM) STORAGE COLOR CODE: BLUE (HEALTH)

SPECIAL PRECAUTIONS

KEEP CONTAINER TIGHTLY CLOSED. STORE IN SECURE POISON AREA.
KEEP CONTAINERS OUT OF SUN AND AWAY FROM HEAT.

10 - TRANSPORTATION DATA AND ADDITIONAL INFORMATION

DOMESTIC (D.O.T.)

PROPER SHIPPING NAME	DICHLOROMETHANE (AIR ONLY)
HAZARD CLASS	ORM-A
UN/NA	UN1593
LABELS	NONE
REPORTABLE QUANTITY	1000 LBS.

INTERNATIONAL (I.M.O.)

PROPER SHIPPING NAME	DICHLOROMETHANE
HAZARD CLASS	6.1
UN/NA	UN1593
LABELS	HARMFUL - STOW AWAY FROM FOOD STUFFS

MATERIAL SAFETY DATA SHEET

Prepared to U.S. OSHA, CMA, ANSI and Canadian WHMIS Standards

NFPA RATING

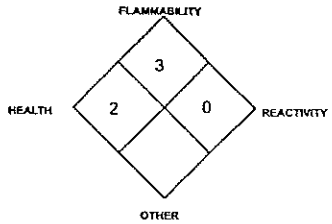

PART I *What is the material and what do I need to know in an emergency?*

1. PRODUCT IDENTIFICATION

CHEMICAL NAME; CLASS: **BENZENE - C_6H_6**
Document Number: 1062

PRODUCT USE: For general analytical/synthetic chemical uses.

SUPPLIER/MANUFACTURER'S NAME: AIRGAS INC.
ADDRESS: 259 Radnor-Chester Road
Suite 100
Radnor, PA 19087-5240

BUSINESS PHONE: 1-610-687-5253
EMERGENCY PHONE: CHEMTREC: 1-800-424-9300
International: 202-483-7616

DATE OF PREPARATION: May 14, 1997
SECOND REVISION: January 16, 1998

2. COMPOSITION and INFORMATION ON INGREDIENTS

CHEMICAL NAME	CAS #	mole %	EXPOSURE LIMITS IN AIR					
			ACGIH		OSHA			
			TLV ppm	STEL ppm	PEL ppm	STEL ppm	IDLH ppm	OTHER
BENZENE	71-43-2	99.9%	0.5, A1 (Confirmed Human Carcinogen)	2.5, A1 (Confirmed Human Carcinogen)	1	5	500	NIOSH REL: 0.1 ppm TWA; 1 ppm STEL OSHA: 1 ppm TWA; 5 ppm STEL OSHA Action Level: 0.5 ppm EPA-A; IARC-1; MAK-A1; NIOSH-X; NTP-1; OSHA-X;

NE = Not Established C = Ceiling Limit See Section 16 for Definitions of Terms Used

NOTE: All WHMIS required information is included. It is located in appropriate sections based on the ANSI Z400.1-1993 format.

3. HAZARD IDENTIFICATION

EMERGENCY OVERVIEW: Benzene is a colorless, flammable, toxic liquid with a characteristic aromatic odor. Benzene is a confirmed human carcinogen and a possible human mutagen. Inhalation of vapors of Benzene can cause serious, permanent damage to the blood system. Skin and eye contact can be irritating. This liquid is very flammable; vapors are heavier than air and may travel long distances to source of ignition and flashback. If involved in a fire Benzene will decompose to produce toxic gases (e.g., carbon monoxide, carbon dioxide, irritating aldehydes and ketones). Persons responding to fires or emergencies involving Benzene must have adequate fire protection and wear personal protective equipment to protect against the significant health hazards posed by Benzene.

SYMPTOMS OF OVEREXPOSURE BY ROUTE OF EXPOSURE: Benzene is a serious poison by all routes of exposure. The symptoms of each route of exposure are described below.

INHALATION: The immediate symptoms of inhalation of vapors of Benzene are due to the initial excitation, followed by depression of the central nervous system. Central nervous system symptoms include drowsiness, headache, nausea, incoordination and unconsciousness, that can lead to death in severe cases. Other symptoms of acute overexposure to vapors of Benzene can include transient euphoria, ataxia (incoordination of voluntary muscular movements), vertigo, tinnitus, substernal pain, cough, hoarseness and general irritation of the nose, throat and respiratory tract, confusion, stupefaction and coma. In cases of severe overexposure (as may occur in a confined space, or other poorly ventilated areas, or if large volumes are used or released), tremors, convulsions and death, due to respiratory paralysis or circulatory collapse can occur within minutes to several hours following exposure. Reversible liver and kidney effects have been reported after exposure to Benzene. The effects associated with various levels of Benzene vapors are as follows:

CONCENTRATION	SYMPTOM OF EXPOSURE
Brief (10 minute) up to 25 ppm:	No symptoms.
50-150 ppm:	Exhilaration, headache, tiredness, nose and throat irritation.
20,000 (for 5-10 min):	Collapse and death

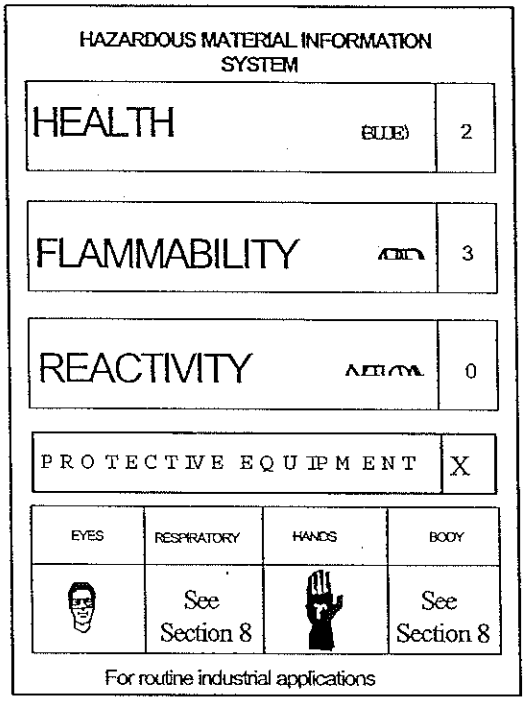

See Section 16 for Definition of Ratings

One of the most significant health effects associated with Benzene is the potential for blood system disorders which develop after long-term exposures to relatively low vapor concentrations. There are reports that exposure to low levels (10 ppm) over an extended time period (24 weeks) of Benzene vapors can damage the bone marrow and blood systems. This damage can result in the development of serious health disorders (including anemia and leukemia). Adverse effects on the immune system have also been reported. Refer to "Other Health Effects" in this section for further information.

CONTACT WITH SKIN or EYES: Contact with the skin can cause irritation and redness. Repeated or prolonged contact can also cause dermatitis, resulting in dry, itchy, cracked skin as Benzene is a defatting agent, removing oils from the skin. Contact with the vapors of Benzene and the eyes will be irritating. Direct contact of the liquid with the eyes can cause irritation, pain; prolonged contact may result in tissue damage.

SKIN ABSORPTION: Benzene poisoning through skin contact has been reported, although skin absorption is not considered as significant a route of exposure as via inhalation or ingestion. Symptoms of absorption may be similar to those described in "Ingestion".

INGESTION: Ingestion of Benzene will cause a burning sensation in the mouth and stomach, nausea, vomiting, excess salivation and vomiting of blood. Benzene is readily absorbed into the body following ingestion exposures, producing symptoms of central nervous system depression and other symptoms similar to those described in "Inhalation". If ingested, Benzene presents a potential aspiration hazard. Aspiration of even small amounts of Benzene into the lungs can result in immediate pulmonary edema (a potentially fatal accumulation of fluid in the lungs), chemical pneumonitis and hemorrhage of pulmonary tissue.

INJECTION: Injection is not anticipated to be a significant route of overexposure for Benzene. If Benzene is "injected" (as may occur through punctures by contaminated, sharp objects), symptoms described in "Inhalation" can occur.

3. HAZARD IDENTIFICATION (Continued)

OTHER HEALTH EFFECTS: The chief target organ affected by serious Benzene exposure is the blood and bone marrow system. Chronic Benzene exposure eventually leads to pancytopenia (abnormal decrease of all three formed elements of the blood; hemoglobin, disease-fighting leukocytes and blood-clotting thrombocytes), followed by thrombocytopenia (problems with the blood-clotting properties of the blood) and anemia. These syndromes can lead to sudden, overwhelming infections. After exposure to Benzene, bleeding from the nose, gums, or mucous membranes and development of small bruises can occur. Benzene is a confirmed human carcinogen and can produce forms of leukemia. Direct contact with the liquid with mucous membranes will result in the development of hemorrhagic lesions.

HEALTH EFFECTS OR RISKS FROM EXPOSURE: An Explanation in Lay Terms. Overexposure to may cause the health effects described on the following page.

ACUTE: Acute inhalation overexposure to Benzene will initially act as a narcotic, possibly leading to coma in extreme cases. Following exposure to high concentrations, victims may be unconscious, and if exposure continues, death can follow from respiratory failure and circulatory collapse. Contact with the skin can cause irritation and dermatitis. Contact with the eyes is irritating, causing burning and watering of the eyes. Ingestion of Benzene will cause gastric distress, hemorrhage and possible severe depression of the central nervous system. Aspiration of Benzene into the lungs, following ingestion, can result in severe damage to the lungs; death may result.

CHRONIC: Chronic exposure to Benzene causes serious damage to the health by all routes of exposure. Chronic oral and inhalation exposure causes severe effects on the blood system, including damage to the bone marrow, leading to a decrease in production or changes to the cells of hemoglobin, hematocrit, red and white blood cells. Effects can occur with an exposure level as low as 10 ppm for 24 weeks. Benzene also causes harmful changes to the immune system, decreasing the production of mature B- and T- white blood cells. Benzene is a confirmed human carcinogen, which can produce Hodgkin's Disease, leukemia and lymphomas by inhalation. Human mutation data are reported for Benzene. See Section 11 (Toxicological Information) for further information. Symptoms of chronic exposure by most routes can be delayed for months to years after exposure has ceased.

TARGET ORGANS: Respiratory system, central nervous system, blood and immune systems, bone marrow, heart, liver, kidneys, skin, eyes, and reproductive system.

PART II *What should I do if a hazardous situation occurs?*

4. FIRST-AID MEASURES

RESCUERS SHOULD NOT ATTEMPT TO RETRIEVE VICTIMS OF EXPOSURE TO BENZENE WITHOUT ADEQUATE PERSONAL PROTECTIVE EQUIPMENT. If necessary, a Self-Contained Breathing Apparatus should be worn.

INHALATION: If vapors, mists, or sprays of Benzene are inhaled, remove victim to fresh air. Only trained personnel should administer supplemental oxygen and/or cardio-pulmonary resuscitation if necessary. Remove or cover gross contamination to avoid exposure to rescuers.

SKIN EXPOSURE: If Benzene contaminates the skin, immediately begin decontamination with running water. Minimum flushing is for 15 minutes. Remove exposed or contaminated clothing, taking care not to contaminate eyes. Victim must seek medical attention if any adverse reaction occurs.

EYE EXPOSURE: If Benzene or its vapors enter the eyes, open victim's eyes while under gentle running water. Use sufficient force to open eyelids. Have victim "roll" eyes. Minimum flushing is for 15 minutes. Victim must seek immediate medical attention.

INGESTION: If Benzene is swallowed, CALL PHYSICIAN OR POISON CONTROL CENTER FOR MOST CURRENT INFORMATION. If professional advice is not available, do not induce vomiting. Victim should drink milk, egg whites, or large quantities of water. If vomiting occurs naturally, have victim lean forward to reduce risk of aspiration. Never induce vomiting or give diluents (milk or water) to someone who is unconscious, having convulsions, or who cannot swallow.

Victims of chemical exposure must be taken for medical attention. Rescuers should be taken for medical attention, if necessary. Physicians should refer to "Recommendations to Physicians" in Section 11 (Toxicological Information). Take copy of label and MSDS to health professional with victim.

5. FIRE-FIGHTING MEASURES

FLASH POINT, (Closed Cup): -11°C (12°F)

AUTOIGNITION TEMPERATURE: 498°C (928°F)

FLAMMABLE LIMITS (in air by volume, %):

Lower (LEL): 1.3%
Upper (UEL): 7.1%

FIRE EXTINGUISHING MATERIALS:

Water Spray: YES (for cooling only)
Foam: YES
Halon: YES
Carbon Dioxide: YES
Dry Chemical: YES
Other: Any "B" Class.

NFPA RATING

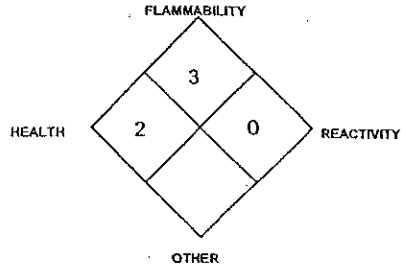

See Section 16 for Definition of Ratings

UNUSUAL FIRE AND EXPLOSION HAZARDS: Benzene is a Class IB flammable liquid and presents a serious fire hazard to firefighters. Due to the low flash point, vapors can form explosive mixtures with air, at room temperature. When involved in a fire, this material may decompose and produce toxic gases (e.g., carbon monoxide, carbon dioxide, irritating aldehydes and ketones). The vapors of Benzene are heavier than air and may spread long distances; distant ignition and flash-back are possible. Benzene can float on water; therefore, water contaminated with Benzene can spread the flammable liquid and can spread fire. Containers of Benzene, when involved in fire, may rupture or burst in the heat of the fire.

Explosion Sensitivity to Mechanical Impact: Not sensitive.

Explosion Sensitivity to Static Discharge: Benzene can accumulate static charge by flow or agitation; vapors can be ignited by static discharge.

SPECIAL FIRE-FIGHTING PROCEDURES: In the event of fire, cool containers of Benzene with water to prevent failure. Use a water spray or fog to reduce or direct vapors. Water may not be effective in actually extinguishing a fire involving Benzene, due to its low flash point. Stop the leak or discharge, if possible. For small releases, if it is not possible to stop the leak, and it does not endanger personnel, let the fire burn itself out. Incipient fire responders should wear eye protection. Structural firefighters must wear Self-Contained Breathing Apparatus and full protective equipment, including chemical resistant clothing. Large fires should be fought from a distance with an unmanned hose holder or monitor nozzles. If Benzene is involved in a fire, fire runoff water should be contained to prevent possible environmental damage. If necessary, decontaminate fire-response equipment with soap and water solution. For large releases, consider evacuation. Refer to the North American Emergency Response Guidebook (Guide #130) for additional guidance.

6. ACCIDENTAL RELEASE MEASURES

SPILL AND LEAK RESPONSE: Evacuate immediate area. Uncontrolled releases should be responded to by trained personnel using pre-planned procedures. Proper protective equipment should be used. In case of a release, clear the affected area, protect people, and respond with trained personnel.

Minimum Personal Protective Equipment should be **Level B: triple-gloves (rubber gloves and nitrile gloves, over latex gloves), chemical resistant suit and boots, hard-hat, and Self-Contained Breathing Apparatus.** Monitor the surrounding area for combustible vapor levels. Combustible vapor levels must be below 10% of the LEL for Benzene (LEL = 1.3%) before personnel are permitted to enter the area. If necessary, ventilate area.

Monitoring should be done for the levels of Benzene and oxygen. Colorimetric tubes are available to detect the presence of Benzene. Levels of Benzene should be below levels listed in Section 2 (Composition and Information on Ingredients) and the atmosphere must have at least 19.5 percent oxygen before personnel can be allowed in the area without Self-Contained Breathing Apparatus.

Eliminate all sources of ignition before clean-up operations begin. Use non-sparking tools. Absorb spilled liquid with activated carbon, polypads or other suitable absorbent materials. Prevent material from entering sewer or confined spaces. Decontaminate the area thoroughly. Place all spill residue in an appropriate container and seal. If necessary, decontaminate spill-response equipment with soap and water solution. Dispose of in accordance with Federal, State, and local hazardous waste disposal regulations (see Section 13, Disposal Considerations).

THIS IS AN EXTREMELY FLAMMABLE, TOXIC LIQUID: Protection of all personnel and the area must be maintained. All responders must be adequately protected from exposure.

PART III *How can I prevent hazardous situations from occurring?*

7. HANDLING and STORAGE

WORK PRACTICES AND HYGIENE PRACTICES: As with all chemicals, avoid getting Benzene ON YOU or IN YOU. Wash hands after handling chemicals. Do not eat or drink while handling this material. Remove contaminated clothing immediately.

Note: Refer to the OSHA Benzene Standard (29 CFR 1910.1028) for specific requirements associated with the use of Benzene. The Action Level for Benzene is 0.5 ppm as an 8-hour, time-weighted average. In workplaces where employees are exposed above the Action Level, the OSHA requirements for monitoring, establishment of regulated areas, methods of compliance, respiratory protection, emergency response protocol, medical surveillance, training and record keeping must be followed.

STORAGE AND HANDLING PRACTICES: Entrances to regulated areas (as defined by the OSHA Benzene Standard) must be posted with signs which reads as follows:

DANGER
BENZENE
CANCER HAZARD
FLAMMABLE- NO SMOKING
AUTHORIZED PERSONNEL ONLY

All employees who handle this material should be trained to handle it safely. Avoid breathing vapors or mists generated by Benzene. Use in a well-ventilated location. Cylinders of Benzene must be properly labeled. If Benzene is used in other types of containers, only use portable containers and dispensing equipment (faucet, pump, drip can) approved for flammable liquids.

Store cylinders of Benzene in a cool, dry location, away from direct sunlight, sources of intense heat, or where freezing is possible. Do not allow area where cylinders are stored to exceed 52°C (125°F). Material should be stored in secondary containers, or in a diked area, as appropriate. Store containers away from incompatible chemicals. Keep container tightly closed when not in use. Storage areas should be made of fire-resistant materials. Inspect all incoming containers before storage, to ensure containers are properly labeled and not damaged. Refer to NFPA 30, Flammable and Combustible Liquids Code, for additional information on storage.

Empty containers may contain residual flammable liquid or vapors. Therefore, empty containers should be handled with care. Do not expose "empty" containers to welding touches, or any other source of ignition.

SPECIAL PRECAUTIONS FOR HANDLING CYLINDERS: Protect cylinders of Benzene against physical damage. If appropriate, cylinders should be stored in an up-right position. Cylinders should be firmly secured to prevent falling or being knocked over. Cylinders can be stored in the open, but in such cases, should be protected against extremes of weather and from the dampness of the ground to prevent rusting. Never tamper with pressure relief devices in valves and cylinders. Electrical equipment should be non-sparking or explosion proof. The following rules are applicable to situations in which cylinders are being used:

Before Use: If appropriate, move cylinders with a suitable hand-truck. Do not drag, slide or roll cylinders. Do not drop cylinders or permit them to strike each other. Secure cylinders firmly. Leave the valve protection cap in-place until cylinder is ready for use.

During Use: Use designated CGA fittings and other support equipment. Do not use adapters. Do not heat cylinder by any means to increase the discharge rate of the product from the cylinder. Use check valve or trap in discharge line to prevent hazardous backflow into the cylinder. Do not use oils or grease on gas-handling fittings or equipment.

After Use: Close main cylinder valve. Replace valve protection cap. Mark empty cylinders "EMPTY".

NOTE: Use only DOT or ASME code containers. Earth-ground and bond all lines and equipment associated with Benzene. Close valve after each use and when empty. Cylinders must not be recharged except by or with the consent of owner. For additional information refer to the Compressed Gas Association Bulletin SB-2 "*Oxygen Deficient Atmospheres*".

PROTECTIVE PRACTICES DURING MAINTENANCE OF CONTAMINATED EQUIPMENT: Follow practices indicated in Section 6 (Accidental Release Measures). Make certain application equipment is locked and tagged-out safely. Always use Benzene in areas where adequate ventilation is provided. Decontaminate equipment using soapy water before maintenance begins. Collect all rinsates and dispose of according to applicable Federal, State, or local procedures.

8. EXPOSURE CONTROLS - PERSONAL PROTECTION

VENTILATION AND ENGINEERING CONTROLS: Use with adequate ventilation. Use a mechanical fan or vent area to outside. Where appropriate, use a non-sparking, grounded ventilation system separate from other exhaust ventilation systems. Ensure eyewash/safety shower stations are available near areas where Benzene is used.

RESPIRATORY PROTECTION: Maintain exposure levels of Benzene below the levels listed in Section 2 (Composition and Information on Ingredients) and oxygen levels above 19.5% in the workplace. Use supplied air respiratory protection if Benzene levels exceed exposure limits and if oxygen level is below 19.5% or during emergency response to a release of Benzene. If respiratory protection is required, follow the requirements of the Federal OSHA Respiratory Protection Standard (29 CFR 1910.134), or equivalent State standards. The following NIOSH respiratory protection recommendations are for Benzene.

CONCENTRATION	RESPIRATORY EQUIPMENT
At Concentrations Above the NIOSH REL, or Where there is no REL, at any Detectable Concentration:	Positive-pressure, full facepiece SCBA or positive pressure, full-facepiece Supplied Air Respirator (SAR) with an auxiliary positive pressure SCBA.
Escape:	Gas mask with organic vapor cartridge or escape-type SCBA should be used.

The IDLH concentration for Benzene is 500 ppm. The carcinogenic effects of Benzene were not considered by NIOSH in determination of the IDLH.

NOTE: In areas which exceed the OSHA Action Level of Benzene, the respirator selection guidelines in the Benzene Standard [29 CFR 1910.1028 (g)] apply.

EYE PROTECTION: Splash goggles or safety glasses. Face-shields should be worn if contact with the liquid is anticipated.

HAND PROTECTION: Wear leather gloves for handling of cylinders of Benzene. Wear chemically impervious gloves appropriate for Benzene for industrial use. Gloves should have a resistance to breakthrough greater than 8 hours, such as polyvinyl alcohol, Barricade™ or Responder™. **Butyl rubber, natural rubber, neoprene, nitrile rubber, or polyethylene, polyvinyl chloride, Saranex™, Chemrel™ are not recommended.** Use triple gloves for spill response (see Section 6, Accidental Release Measures).

BODY PROTECTION: Use body protection appropriate for task. An impervious, full-body, encapsulating suit may be necessary for some operations involving Benzene. Safety shoes are recommended when handling cylinders.

9. PHYSICAL and CHEMICAL PROPERTIES

RELATIVE VAPOR DENSITY (air = 1): 2.7
SPECIFIC GRAVITY(@ 68°F (20°C) (water = 1): 0.877
SOLUBILITY IN WATER @ 77°F (25°C): 180 mg/mL
EVAPORATION RATE (diethyl ether = 1): 2.8
ODOR THRESHOLD: 97 ppm(detection); 97 ppm (recognition)
pH: Not applicable.
FREEZING/MELTING POINT: 5.5°C (42°F)
BOILING POINT: 80°C (176°F)
SPECIFIC VOLUME: Not applicable.
EXPANSION RATIO Not applicable.
LOG COEFFICIENT WATER/OIL DISTRIBUTION: Log P (oct) = 1.18-1.9; 2.13; 2.15
VAPOR PRESSURE @ 68°F (20°C): 75 mm Hg: 10 kPa

APPEARANCE AND COLOR: Colorless, flammable liquid, with a characteristic aromatic hydrocarbon odor.

HOW TO DETECT THIS SUBSTANCE (warning properties): The odor of Benzene is not a good warning property as a the odor threshold is above the TLV.

10. STABILITY and REACTIVITY

STABILITY: Normally stable.

DECOMPOSITION PRODUCTS: If Benzene is involved in a fire, it may ignite to yield toxic fumes of carbon monoxide, carbon dioxide, irritating aldehydes and ketones.

MATERIALS WITH WHICH SUBSTANCE IS INCOMPATIBLE: Benzene becomes spontaneously flammable in the presence of sodium peroxide and potassium peroxide. Benzene can explode on contact with chromic anhydride, permanganic acid and chlorine.

10. STABILITY and REACTIVITY (Continued)

MATERIALS WITH WHICH SUBSTANCE IS INCOMPATIBLE (Continued): Benzene can react vigorously with oxidizing materials. Benzene may react violently or explosively with risk of fire with nitric acid, ozone, diborane, interhalogens (e.g., bromine trifluoride, bromine pentafluoride, chloride trifluoride, iodine pentafluoride, iodine heptafluoride), dioxygen difluoride, dioxygenyl tetrafluoroborate, permanganic acid, peroxodifsulfuric acid, peroxomonosulfuric acid. Benzene will react with nitryl perchlorate, causing a slight explosion and flash. Benzene will react vigorously with uranium hexafluoride. Benzene will attack rubber and plastics.

HAZARDOUS POLYMERIZATION: Will not occur.

CONDITIONS TO AVOID: Avoid contact with incompatible materials, sparks, flame static discharge and other sources of ignition. Avoid exposing cylinders to extremely high temperatures, which could cause the cylinders to rupture or burst.

PART III *How can I prevent hazardous situations from occurring?*

11. TOXICOLOGICAL INFORMATION

TOXICITY DATA: The following information is available for Benzene.

Skin-Rabbit, adult 15 mg/24 hours open Mild irritation effects
Skin-Rabbit, adult 20 mg/24 hours Moderate irritation effects
Eye effects-Rabbit, adult 88 mg Moderate irritation effects
Eye effects-Rabbit, adult 2 mg/24H Severe irritation effects
orns-Human: lymphocyte 5 µmol/L
Microsomal Mutageniticity Assay-Mouse: embryo 2500 mg/L
Oral-Mouse TDLo: 6500 mg/kg (female 8-12 days post): Reproductive effects Teratogenesis, Carcinogenesis, and Mutagenesis
Inhalation-Mouse TCLo: 5 ppm (female 6-15 days post): Teratogenic effects
Inhalation-Man TCLo: 200 mg/m^3/78 weeks -intermittent: Carcinogenic effects, Blood effects
Inhalation-Human TCLo: 10 ppm/8 hours /10 years-intermittent: Carcinogenic effects, Blood effects
Oral-Rat TDLo: 52 g/kg/52 weeks - intermittent: Carcinogenic effects
Inhalation-Rat TCLo: 1200 ppm/6 hours/10 weeks - intermittent: Equivocal tumorigenic agent
Oral-Mouse TDLo :18,250 mg/kg/2 years - continuos: Carcinogenic effects
Inhalation-Human TC :8 ppb/4 weeks- intermittent: Carcinogenic effects, Blood effects
Inhalation-Dog, adult LCLo: 146,000 mg/
Inhalation-Cat, adult LCLo: 170,000 mg/m^3
Inhalation-Human TC: 10 mg/m 3/11 years- intermittent: Carcinogenic effects, Blood effects
Inhalation-Mouse TCLo: 300 ppm/6 hours/16 weeks-intermittent: Equivocal tumorigenic agent
Skin-Mouse TDLo: 1200 g/kg/49 weeks - intermittent: Neoplastic effects
Intraperitoneal-Mouse TDLo: 1200 mg/kg/8 weeks - intermittent: Neoplastic effects
Inhalation-Man TC: 150 ppm/11 years - intermittent: Carcinogenic effects, Blood effects
Inhalation-Mouse TC :1200 ppm/6 hours/10 weeks - intermittent: Equivocal tumorigenic agent
Oral-Mouse TD: 2400 mg/kg/8 weeks - intermittent: Neoplastic effects
Inhalation-Mouse TC: 300 ppm/6 hours/16 weeks intermittent: Carcinogenic effects
Inhalation-Human LCLo :2 pph/5 minutes
Oral-Man LDLo: 50 mg/kg
Inhalation-Human LCLo: 20,000 ppm/5
Inhalation-Man TCLo: 150 ppm/1 year - intermittent: Blood effects
Inhalation-Human TCLo: 100 ppm
Intravenous-Rabbit, adult LDLo :88 mg/kg
Inhalation-Human LCLo: 65 mg/m^3/5 years: Blood effects
Oral-Rat LD50: 3306 mg/kg
Inhalation-Rat LC50: 10,000 ppm/7 hours
Intraperitoneal-Rat LD50 :2890 µg/kg
Oral-Mouse LD50: 4700 mg/kg
Inhalation-Mouse LC50: 9980 ppm
Intraperitoneal-Mouse LD50: 340 mg/kg
Oral-Dog, adult LDLo: 2000 mg/kg
Subcutaneous-Mouse TDLo 600 mg/kg/17 weeks - intermittent: Equivocal tumorigenic agent
Parenteral-Mouse TDLo: 670 mg/kg/19 weeks - intermittent: Equivocal tumorigenic agent
Inhalation-Human TC: 150 ppm/15 minutes /8 years - intermittent: Carcinogenic effects, Blood effects
Oral-Rat TD: 52 g/kg/1 years - intermittent: Carcinogenic effects
Oral-Rat TD: 10 g/kg/52 weeks - intermittent: Carcinogenic effects
Inhalation-Man TC :600 mg/m^3/4 years - intermittent: Carcinogenic effects, Blood effects

Additional Information on Benzene: Because of the chronic toxicity effects associated with Benzene, additional information is provided, as follows:

EFFECTS ON THE BLOOD AND BLOOD-FORMING ORGANS: Extensive studies have conclusively proven that oral and inhalation exposure to benzene causes severe effects on the blood system, including damaging the bone marrow where new blood cells are formed. Most studies report a decrease in hemoglobin, hematocrit, red and white blood cells, platelets and/or changes in the cells. Effects of varying severity have been demonstrated with both intermittent and continuous exposures to concentrations as low as 10 ppm for 24 weeks.

EFFECTS ON THE IMMUNE SYSTEM: Studies have also conclusively shown that benzene causes harmful changes to the immune system which protects the body from disease. Benzene has decreased the number of mature B- and T-lymphocytes (white blood cells which produce disease-fighting antibodies). Exposure of mice to 300 ppm for 6 to 23 weeks resulted in a decrease in the number of mature B- and T-lymphocytes. Rats and mice exposed orally to 25 to 200 mg/kg/day for 2 years had significantly reduced white blood cells and lymphocytes.

11. TOXICOLOGICAL INFORMATION (Continued)

SUSPECTED CANCER AGENT: Benzene is listed as follows:

BENZENE: ACGIH-A2 (Suspected Human Carcinogen); EPA-A (Human Carcinogen); IARC-1 (Carcinogenic to Humans); MAK-A1 (Capable of Inducing Malignant Tumors/Experience with Humans); NIOSH-X (Carcinogen); NTP-1 (Known to be a Carcinogen); OSHA-X (Carcinogen); Cal-OSHA (Carcinogen).

IRRITANCY OF PRODUCT: Benzene is irritating to the skin, eyes, and other contaminated tissue.

SENSITIZATION OF PRODUCT: Benzene is not known to cause respiratory system or skin sensitization in humans. Cardiac sensitization to stimulants (e.g., epinephrine, ephedrine) is a possible result of severe or chronic overexposure.

REPRODUCTIVE TOXICITY INFORMATION: Listed below is information concerning the effects of Benzene on the human reproductive system.

Mutagenicity: Human mutation data are available for Benzene. These data were obtained from individuals who were exposed at levels which produced changes in the blood system.
Embryotoxicity: Benzene is not reported to cause embryotoxic effects in humans.
Teratogenicity: Benzene is not reported to cause teratogenic effects in humans. Teratogenic data are available from clinical studies involving test animals exposed to relatively high doses of Benzene. Fetotoxic effects (e.g., reduced birth weight and/or minor skeletal variations) were observed at exposures above 50 ppm.
Reproductive Toxicity: Data on reproductive effects on ovaries and testes are available from clinical studies involving test animals exposed to relatively high doses of Benzene. These data were obtained at doses which caused toxic effects on other organs.

A mutagen is a chemical which causes permanent changes to genetic material (DNA) such that the changes will propagate through generational lines. An embryotoxin is a chemical which causes damage to a developing embryo (i.e. within the first eight weeks of pregnancy in humans), but the damage does not propagate across generational lines. A teratogen is a chemical which causes damage to a developing fetus, but the damage does not propagate across generational lines. A reproductive toxin is any substance which interferes in any way with the reproductive process.

MEDICAL CONDITIONS AGGRAVATED BY EXPOSURE: Pre-existing blood system disorders, respiratory conditions, central nervous, liver, kidney, and cardio-vascular conditions may be aggravated by severe or chronic overexposure to Benzene. Skin disorders may also be aggravated by exposures to Benzene.

RECOMMENDATIONS TO PHYSICIANS: The following guidelines are derived from "Clinical Toxicology of Commercial Chemical Products" (5th edition, 1984).

- Check for signs of impending pulmonary edema.
- Because of the aspiration hazard, avoid emetic drugs, whenever practical.
- For overexposures in which emesis is advisable: If the patient is not drowsy, comatose, or in respiratory difficulty, induce vomiting. If necessary, as an alternative treatment, remove Benzene from the stomach via gastric lavage. One or two ounces of mineral oil may be instilled and left in the stomach at the completion of lavage.
- Avoid epinephrine because of its possible adverse effect on the sensitized myocardium. Avoid all digestible fats, oils and alcohol,, which may promote the absorption of Benzene in the intestinal system.
- If eyes or skin are affected, wash thoroughly and apply a bland analgetic ointment.
- Because of the possibility of ventricular fibrillation, monitor the ECG continuously and be prepared to administer external cardiac massage.

Refer to the OSHA Benzene Standard [29 CFR 1910.1028; paragraph(i) and Appendix C] for specific information on Medical Surveillance requirements (i.e. for the general physical exam, medical history, specific tests, and re-examination protocol).

BIOLOGICAL EXPOSURE INDICES (BEIs): The following Biological Exposure Indices (BEIs) are currently applicable for Benzene.

BIOLOGICAL EXPOSURE INDICES (BEIs) for Benzene are as follows:		
CHEMICAL DETERMINANT	SAMPLING TIME	BEI
BENZENE • Total phenol in urine • Benzene in exhaled air: mixed-exhaled end-exhaled	• End of shift • Prior to next shift	• 50 mg/g creatinine • 0.08 ppm • 0.12 ppm

12. ECOLOGICAL INFORMATION

ENVIRONMENTAL STABILITY: Benzene will be degraded over time into other organic compounds. The following environmental data are available for Benzene.

BENZENE: K_{OW} = 2.13. Water Solubility = 1791 mg/L. BCF (*Anguilla japonica*, eels) = 3.5. BCF (*Clupea harengus Pallasi*, pacific herring) = 4.4. BCF (goldfish) = 4.3. BCF, benzene = 24 (estimated). If benzene is released into the soil, it will be volatilized near the surface or it will leach to the groundwater. No degradation of benzene (BOD) was reported in coarse-filtered Lake Superior harbor water incubated at 21°C for 12 days. In the marine eco-system, biodegradation occurs from 2 days to 2 weeks in the summer and spring, respectively. The half-life of Benzene in estuarine water was 6 days, as measured by $^{14}CO_2$ produced. Biodegradation half-lives of 28 and 16 days were reported in die-away tests for degradation of up to 3.2 UL/L benzene using groundwater and Lester River water, respectively, under aerobic conditions. In a base-rich para-brownish soil, 20 ppm benzene was 24% degraded in one week, 44% in 5 weeks and 47% in 10 weeks. It is not expected to adsorb to sediment nor bioconcentrate in aquatic organisms.

EFFECT OF MATERIAL ON PLANTS or ANIMALS: Benzene may be harmful or fatal to contaminated plant and animal-life (especially if large quantities of Benzene are released). Refer to Section 11 (Toxicology Information). Additional information is available on the effects of Benzene on plants as follows:

Benzene is lethal to plants at high concentrations (GT 15600 ppm in air) and short (30 minutes) exposure times. In all species studied recovery was complete upon removal from exposure to sub-lethal concentrations.

Plant growth and rooting is stimulated by aqueous solutions of low benzene concentrations (0.01-0.10 saturated). Aqueous solutions containing high concentrations (0.10-0.15% Benzene) inhibit growth and interfere with metabolism and cell division.

EFFECT OF CHEMICAL ON AQUATIC LIFE: Benzene can be harmful or fatal to contaminated aquatic plant and animal life. Benzene floats on water, and can potentially form slicks which are capable of creating oxygen-deprived waterways which can contaminate coastal and shore life. The following aquatic toxicity data are available for Benzene.

LC_{100} (*Tetrahymena pyriformis*, ciliate) = 12.8 mmol/L/24 hours
LC_{50} (*Palaemonetes pugio*, grass shrimp) = 27 ppm/96 hours
LC_{50} (*Cancer magister*, crab larvae, stage 1) = 108 ppm/96 hours
LC_{50} (*Crangon franciscorum*, shrimp) = 20 ppm/96 hours
LC_{50} (*Poecilia reticulata*, guppy) = 63 ppm/14 days
LC_{50} (*Morone saxatilis*, bass) = 5.8 to 10.9 ppm/96 hours
LC_{50} (*Salmo trutta*, brown trout yearling) = 12 mg/L/1-hour
LC_{50} (*Ambystoma mexicana*, mexican axotoll salamander, 3-4 weeks after hatching) = 370 mg/L/48 hours
LC_{50} (clawed toad, 3-4 weeks after hatching) = 190 mg/L/48 hours
LD_{50} (*Carassium auratus*, goldfish) = 46 mg/L/24-hours
LD_{50} (*Lepomis macrochirus*, bluegill sunfish) = 60 mg/L/2-hours

LC (*Daphnia magna*) highest no adverse level = 98 mg/L
Effect level (blue crab) = 1 mg/L
EC_{50} (freshwater green algae, *Ankistrodesmus falccatus*) = 310 mg (3.97 mmol/L)
Photosynthetic carbon fixation (*selenastrum capricornutum*) = 100, 95, 84, 5; for 24 hour exposure to 0, 10, 100 or 1000 mg Benzene/L
Growth inhibition (*Chlorella vulgaris*) = significant for 25-1744 ppm Benzene
Light saturated photosynthesis relative rates (*Nitzschia palea*, freshwater diatom) = 100, 61, 38, 13; exposure for 2 hours to 0, 175, 350, 520 mg Benzene/L
Growth inhibition (*Skeletonema costatum*) = at 20 mg/L

13. DISPOSAL CONSIDERATIONS

PREPARING WASTES FOR DISPOSAL: Waste disposal must be in accordance with appropriate Federal, State, and local regulations. Return cylinders with residual product to Airgas Inc. Do not dispose of locally.

14. TRANSPORTATION INFORMATION

THIS MATERIAL IS HAZARDOUS AS DEFINED BY 49 CFR 172.101 BY THE U.S. DEPARTMENT OF TRANSPORTATION.

PROPER SHIPPING NAME:	Benzene
HAZARD CLASS NUMBER and DESCRIPTION:	3 (Flammable Liquid)
UN IDENTIFICATION NUMBER:	UN 1114
PACKING GROUP:	PG II
DOT LABEL(S) REQUIRED:	Flammable Liquid

NORTH AMERICAN EMERGENCY RESPONSE GUIDEBOOK NUMBER (1996): 130

MARINE POLLUTANT: Benzene is not classified by the DOT as a Marine Pollutant (as defined by 49 CFR 172.101, Appendix B).

TRANSPORT CANADA, TRANSPORTATION OF DANGEROUS GOODS REGULATIONS: THIS MATERIAL IS CONSIDERED AS DANGEROUS GOODS. Use the above information for the preparation of Canadian Shipments. Also, , there is an additional Hazard Class: 9.2 (Substance Hazardous to the Environment).

15. REGULATORY INFORMATION

U.S. SARA REPORTING REQUIREMENTS: Benzene is subject to the reporting requirements of Sections 302, 304 and 313 of Title III of the Superfund Amendments and Reauthorization Act., as follows;

COMPONENT	SARA 302 (40 CFR 355, Appendix A)	SARA 304 (40 CFR Table 302.4)	SARA 313 (40 CFR 372.65)
Benzene	NO	YES	YES

U.S. SARA THRESHOLD PLANNING QUANTITY: Not applicable.

U.S. CERCLA REPORTABLE QUANTITIES (RQ): 10 lb; RCRA Code = U019.

CANADIAN DSL/NDSL INVENTORY STATUS: Benzene is on the DSL Inventory.

U.S. TSCA INVENTORY STATUS: Benzene is listed on the TSCA Inventory.

OTHER U.S. FEDERAL REGULATIONS: Benzene is subject to the requirements of CFR 29 1910.1028, the OSHA Benzene Standard. The Action Level for Benzene is 0.5 ppm as an 8-hour, time-weighted average under this regulation. The EPA is promulgating water regulations for certain volatile synthetic organic chemicals. Specifically, this notice promulgates a maximum contaminant level for Benzene at 0.005 mg/L. Benzene is not listed in Appendix A as a highly hazardous chemical, per 29 CFR 1910.119: Process Safety Management of Highly Hazardous Chemicals. Under this regulation, however, any process that involves a flammable liquid on-site, in one location, in quantities of 10,000 lbs (4,553 kg) or greater is covered under this regulation unless it is used as a fuel.

U.S. STATE REGULATORY INFORMATION: Benzene is covered under specific State regulations, as denoted below:

Alaska - Designated Toxic and Hazardous Substances: Benzene.
California - Permissible Exposure Limits for Chemical Contaminants: Benzene.
Florida - Substance List: Benzene.
Illinois - Toxic Substance List: Benzene.
Kansas - Section 302/313 List: Benzene.
Massachusetts - Substance List: Benzene.
Michigan Critical Materials Register: Benzene.
Minnesota - List of Hazardous Substances: Benzene.
Missouri - Employer Information/Toxic Substance List: Benzene.
New Jersey - Right to Know Hazardous Substance List: Benzene.
North Dakota - List of Hazardous Chemicals, Reportable Quantities: Benzene.
Pennsylvania - Hazardous Substance List: Benzene.
Rhode Island - Hazardous Substance List: Benzene.
Texas - Hazardous Substance List: Benzene.
West Virginia - Hazardous Substance List: Benzene.
Wisconsin - Toxic and Hazardous Substances: Benzene.

CALIFORNIA SAFE DRINKING WATER AND TOXIC ENFORCEMENT ACT (PROPOSITION 65): Benzene is listed on the California Proposition 65 Lists. WARNING: Benzene is known to the State of California to cause cancer.

LABELING: **DANGER!** EXTREMELY FLAMMABLE LIQUID AND VAPOR. VAPOR CAN CAUSE FLASH FIRE. FLASH POINT = -11°C (12°F). HARMFUL IF INHALED. HARMFUL OR FATAL IF SWALLOWED. PROLONGED OR REPEATED SKIN CONTACT MAY DRY SKIN AND CAUSE IRRITATION. CAN CAUSE CENTRAL NERVOUS SYSTEM EFFECTS. CHRONIC EXPOSURE MAY CAUSE LEUKEMIA AND CAN CAUSE ADVERSE EFFECTS ON THE BLOOD SYSTEM, LIVER, KIDNEYS, REPRODUCTIVE SYSTEM. CAN CAUSE DEATH IF TOO MUCH IS BREATHED. ASPIRATION HAZARD IF SWALLOWED - CAN ENTER LUNGS AND CAUSE DAMAGE. Keep away from heat, sparks and flame. Keep container closed. Use only with adequate ventilation. Avoid contact with skin and clothing. Avoid exposure to vapor. Wash thoroughly after handling. FIRST-AID: In case of contact, immediately flush skin with plenty of water. Remove contaminated clothing and shoes. Get medical attention if irritation develops or persists. If inhaled, remove to fresh air. If not breathing, give artificial respiration. If breathing is difficult, give oxygen. In case of fire, use water fog, foam, dry chemical, or CO_2. In case of spill: Absorb spill with inert materials (e.g. activated carbon, dry sand). Flush residual spill with water. Consult Material Safety Data Sheet for additional information.

CANADIAN WHMIS SYMBOLS: **Class B2:** Flammable Liquid.
Class D2A/D2B: Material Causing Other Toxic Effects

16. OTHER INFORMATION

PREPARED BY:

CHEMICAL SAFETY ASSOCIATES, Inc.
9163 Chesapeake Drive, San Diego, CA 92123-1002
619/565-0302

The information contained herein is based on data considered accurate. However, no warranty is expressed or implied regarding the accuracy of these data or the results to be obtained from the use thereof. AIRGAS, Inc. assumes no responsibility for injury to the vendee or third persons proximately caused by the material if reasonable safety procedures are not adhered to as stipulated in the data sheet. Additionally, AIRGAS, Inc. assumes no responsibility for injury to vendee or third persons proximately caused by abnormal use of the material even if reasonable safety procedures are followed. Furthermore, vendee assumes the risk in his use of the material.

DEFINITIONS OF TERMS

A large number of abbreviations and acronyms appear on a MSDS. Some of these which are commonly used include the following:

CAS #: This is the Chemical Abstract Service Number which uniquely identifies each constituent. It is used for computer-related searching.

EXPOSURE LIMITS IN AIR:
ACGIH - American Conference of Governmental Industrial Hygienists, a professional association which establishes exposure limits. **TLV** - Threshold Limit Value - an airborne concentration of a substance which represents conditions under which it is generally believed that nearly all workers may be repeatedly exposed without adverse effect. The duration must be considered, including the 8-hour Time Weighted Average **(TWA)**, the 15-minute Short Term Exposure Limit, and the instantaneous Ceiling Level **(C)**. Skin absorption effects must also be considered.
OSHA - U.S. Occupational Safety and Health Administration. **PEL** - Permissible Exposure Limit - This exposure value means exactly the same as a **TLV**, except that it is enforceable by OSHA. The OSHA Permissible Exposure Limits are based in the 1989 PELs and the June, 1993 Air Contaminants Rule (Federal Register: 58: 35338-35351 and 58: 40191). Both the current **PELs** and the vacated **PELs** are indicated. The phrase, "Vacated 1989 PEL," is placed next to the PEL which was vacated by Court Order.
IDLH - Immediately Dangerous to Life and Health - This level represents a concentration from which one can escape within 30-minutes without suffering escape-preventing or permanent injury. The **DFG - MAK** is the Republic of Germany's Maximum Exposure Level, similar to the U.S. PEL. **NIOSH** is the National Institute of Occupational Safety and Health, which is the research arm of the U.S. Occupational Safety and Health Administration **(OSHA)**. NIOSH issues exposure guidelines called Recommended Exposure Levels (RELs). When no exposure guidelines are established, an entry of NE is made for reference.

HAZARD RATINGS:
HAZARDOUS MATERIALS IDENTIFICATION SYSTEM: Health Hazard: **0** (minimal acute or chronic exposure hazard); **1** (slight acute or chronic exposure hazard); **2** (moderate acute or significant chronic exposure hazard); **3** (severe acute exposure hazard; onetime overexposure can result in permanent injury and may be fatal); **4** (extreme acute exposure hazard; onetime overexposure can be fatal). Flammability Hazard: **0** (minimal hazard); **1** (materials that require substantial pre-heating before burning); **2** (combustible liquid or solids; liquids with a flash point of 38-93°C [100-200°F]); **3** (Class IB and IC flammable liquids with flash points below 38°C [100°F]); **4** (Class IA flammable liquids with flash points below 23°C [73°F] and boiling points below 38°C [100°F]. Reactivity Hazard: **0** (normally stable); **1** (material that can become unstable at elevated temperatures or which can react slightly with water); **2** (materials that are unstable but do not detonate or which can react violently with water); **3** (materials that can detonate when initiated or which can react explosively with water); **4** (materials that can detonate at normal temperatures or pressures).
NATIONAL FIRE PROTECTION ASSOCIATION: Health Hazard: **0** (material that on exposure under fire conditions would offer no hazard beyond that of ordinary combustible materials); **1** (materials that on exposure under fire conditions could cause irritation or minor residual injury); **2** (materials that on intense or continued exposure under fire conditions could cause temporary incapacitation or possible residual injury); **3** (materials that can on short exposure could cause serious temporary or residual injury); **4** (materials that under very short exposure causes death or major residual injury).

NATIONAL FIRE PROTECTION ASSOCIATION (Continued):
Flammability Hazard and Reactivity Hazard: Refer to definitions for "Hazardous Materials Identification System".

FLAMMABILITY LIMITS IN AIR:
Much of the information related to fire and explosion is derived from the National Fire Protection Association **(NFPA)**. Flash Point - Minimum temperature at which a liquid gives off sufficient vapors to form an ignitable mixture with air. Autoignition Temperature: The minimum temperature required to initiate combustion in air with no other source of ignition. LEL - the lowest percent of vapor in air, by volume, that will explode or ignite in the presence of an ignition source. UEL - the highest percent of vapor in air, by volume, that will explode or ignite in the presence of an ignition source.

TOXICOLOGICAL INFORMATION:
Possible health hazards as derived from human data, animal studies, or from the results of studies with similar compounds are presented. Definitions of some terms used in this section are: **LD_{50}** - Lethal Dose (solids & liquids) which kills 50% of the exposed animals; **LC_{50}** - Lethal Concentration (gases) which kills 50% of the exposed animals; **ppm** concentration expressed in parts of material per million parts of air or water; **mg/m^3** concentration expressed in weight of substance per volume of air; **mg/kg** quantity of material, by weight, administered to a test subject, based on their body weight in kg. Data from several sources are used to evaluate the cancer-causing potential of the material. The sources are: **IARC** - the International Agency for Research on Cancer; **NTP** - the National Toxicology Program, **RTECS** - the Registry of Toxic Effects of Chemical Substances, **OSHA** and **CAL/OSHA**. IARC and NTP rate chemicals on a scale of decreasing potential to cause human cancer with rankings from 1 to 4. Subrankings (2A, 2B, etc.) are also used. Other measures of toxicity include **TDLo**, the lowest dose to cause a symptom and **TCLo** the lowest concentration to cause a symptom; **TOo**, **LDLo**, and **LDo**, or **TC**, **TCo**, **LCLo**, and LCo, the lowest dose (or concentration) to cause lethal or toxic effects. BEI - Biological Exposure Indices, represent the levels of determinants which are most likely to be observed in specimens collected from a healthy worker who has been exposed to chemicals to the same extent as a worker with inhalation exposure to the TLV. Ecological Information: EC is the effect concentration in water.

REGULATORY INFORMATION:
This section explains the impact of various laws and regulations on the material. EPA is the U.S. Environmental Protection Agency. **WHMIS** is the Canadian Workplace Hazardous Materials Information System. **DOT** and **TC** are the U.S. Department of Transportation and the Transport Canada, respectively. Superfund Amendments and Reauthorization Act (SARA); the Canadian Domestic/Non-Domestic Substances List **(DSL/NDSL)**; the U.S. Toxic Substance Control Act **(TSCA)**; Marine Pollutant status according to the DOT; the Comprehensive Environmental Response, Compensation, and Liability Act **(CERCLA or Superfund)**; and various state regulations.

Material Safety Data Sheet

sec-BUTYLBENZENE

March 31, 1993

PHILLIPS CHEMICAL COMPANY
A Division of Phillips Petroleum Company
Bartlesville, Oklahoma 74004

PHONE NUMBERS
Emergency: (918) 661-8118
Technical Services: (918) 661-9091
For Additional MSDSs: (918) 661-7297

A. Product Identification

Synonyms: 2-Phenylbutane, secondary-Butylbenzene
Chemical Name: Benzene, (1-methylpropyl)-
Chemical Family: Aromatic hydrocarbon
Chemical Formula: C10H14
CAS Reg. No.: 135-98-8
Product No.: A66400

Product and/or Components Entered on EPA's TSCA Inventory: YES

This product is in U.S. commerce, and is listed in the Toxic Substances Control Act (TSCA) Inventory of Chemicals; hence, it may be subject to applicable TSCA provisions and restrictions.

B. Components

Ingredients	CAS Number	% By Wt.	OSHA PEL	ACGIH TLV
sec-Butylbenzene	135-98-8	100	NE	NE

C. Personal Protection Information

Ventilation: Use adequate ventilation.

Respiratory Protection: Not generally required unless needed to prevent respiratory irritation. In case of spill or leak resulting in unknown concentration, use NIOSH/MSHA approved supplied air respirator.

Eye Protection: Use safety glasses with side shields and face shield for splash protection.

Skin Protection: Use protective garments to prevent skin contact.

NOTE: Personal protection information shown in Section C is based upon general information as to normal uses and conditions. Where special or unusual uses or conditions exist, it is suggested that the expert assistance of an industrial hygienist or other qualified professional be sought.

D. Handling and Storage Precautions

Avoid contact with eyes, skin or clothing. Avoid breathing vapors, mist, fume or dust. Do not swallow. May be aspirated into lungs. Wear protective equipment and/or garments described in Section C if exposure conditions warrant. Wash thoroughly after handling. Launder contaminated clothing before reuse. Use with adequate ventilation.

Keep away from heat, sparks, and flames. Store in a well-ventilated area. Store in closed container. Bond and ground during transfer.

E. Reactivity Data

Stability:	Stable
Conditions to Avoid:	Not Applicable
Incompatibility (Materials to Avoid):	Oxygen and strong oxidizing agents
Hazardous Polymerization:	Will Not Occur
Conditions to Avoid:	Not Applicable
Hazardous Decomposition Products:	Carbon oxides formed when burned.

F. Health Hazard Data

Recommended Exposure Limits:

Not Established.

Acute Effects of Overexposure:

Eye: May cause mild irritation to the eyes.

Skin: May cause mild to moderate irritation to skin. Prolonged or repeated contact with the liquid may cause defatting of the skin resulting in drying, redness, and possibly blistering.

Inhalation: May cause slight to moderate upper airway irritatancy, with higher exposures causing central nervous system depression, headache, and dizziness.

Ingestion: May be slightly irritating to the gastrointestinal tract. If swallowed, may be aspirated resulting in inflammation and possible fluid accumulation in the lungs.

Subchronic and Chronic Effects of Overexposure:

No known applicable information.

Other Health Effects:

No known applicable information.

Health Hazard Categories:

	Animal	Human		Animal	Human
Known Carcinogen	___	___	Toxic	___	___
Suspect Carcinogen	___	___	Corrosive	___	___

Mutagen	___	___	Irritant	___	___
Teratogen	___	___	Target Organ Toxin	_X_	_X_
Allergic Sensitizer	___	___	Specify - Lung-Aspiration Hazard		
Highly Toxic	___	___			

First Aid and Emergency Procedures:

Eye: Flush eyes with running water for at least fifteen minutes. If irritation or adverse symptoms develop, seek medical attention.

Skin: Wash skin with soap and water for at least fifteen minutes. If irritation or adverse symptoms develop, seek medical attention.

Inhalation: Remove from exposure. If breathing is difficult, give oxygen. If breathing ceases, administer artificial respiration followed by oxygen. Seek immediate medical attention.

Ingestion: Do not induce vomiting. Seek immediate medical attention.

Note to Physician: Gastric lavage using a cuffed endotracheal tube may be performed at your discretion.

G. Physical Data

Appearance:	Colorless liquid
Odor:	Acrid
Boiling Point:	344F (173C)
Vapor Pressure:	0.2 psia at 130F (54C)
Vapor Density (Air = 1):	4.6
Solubility in Water:	Negligible
Specific Gravity (H_2O = 1):	0.866
Percent Volatile by Volume:	100
Evaporation Rate (Ethyl Ether = 1):	<1
Viscosity:	Not Established

H. Fire and Explosion Data

Flash Point (Method Used):	126F (52C) (TOC, ASTM D 1310)
Flammable Limits (% by Volume in Air):	LEL - 0.8 UEL - 6.9
Fire Extinguishing Media:	Dry chemical, foam or carbon dioxide (CO_2)
Special Fire Fighting Procedures:	Evacuate area of all unnecessary personnel. Shut off source if possible. Use NIOSH/MSHA approved self-contained breathing apparatus and other protective equipment and/or garments described in Section C if conditions warrant. Water fog or spray may be used to cool exposed containers and equipment. Do not spray water directly on fire - product will float and could be reignited on surface of water.
Fire and Explosion Hazards:	Carbon oxides formed when burned. Highly flammable vapors which are heavier than air may accumulate in low areas and/or spread along ground away from handling site.

I. Spill, Leak and Disposal Procedures

Precautions Required if Material is Released or Spilled:
Evacuate area of all unnecessary personnel. Wear protective equipment and/or garments described in Section C if exposure conditions warrant. Shut off source, if possible and contain spill. Protect from ignition. Keep out of water sources and sewers. Absorb in dry, inert material (sand, clay, etc.). Transfer to disposal drums using non-sparking equipment.

Waste Disposal (Insure Conformity with all Applicable Disposal Regulations):
Incinerate or otherwise manage in a RCRA permitted waste management facility.

J. DOT Transportation

Shipping Name:	Butyl benzenes
Hazard Class:	3 (Flammable liquid)
ID Number:	UN 2709
Packing Group:	III
Marking:	Butyl benzenes, 3 (Flammable liquid), UN 2709, PG III
Label:	Flammable liquid
Placard:	Flammable/2709
Hazardous Substance/RQ:	Not Applicable
Shipping Description:	Butyl benzenes, 3 (Flammable liquid), UN 2709, PG III Marine Pollutant*
Packaging References:	49 CFR 173.150, 173.203, 173.241

NOTE: This product may be reclassed as a combustible liquid when shipped domestically, by land only. If reclassed as a combustible liquid, this product is unregulated by DOT when shipped in non-bulk quantities.

* Marine pollutant mark and shipping paper notation required for all bulk domestic shipments and for non-bulk shipments by water.

K. RCRA Classification - Unadulterated Product as a Waste

Ignitable (D001)

Prior to disposal, consult your environmental contact to determine if TCLP (Toxicity Characteristic Leaching Procedure, EPA Test Method 1311) is required. Reference 40 CFR Part 261.

L. Protection Required for Work on Contaminated Equipment

Contact immediate supervisor for specific instructions before work is initiated. Wear protective equipment and/or garments described in Section C if exposure conditions warrant.

M. Hazard Classification

___ This product meets the following hazard definition(s) as defined by the Occupational Safety and Health Hazard Communication Standard (29 CFR Section 1910.1200):

_X_ Combustible Liquid	___ Flammable Aerosol	___ Oxidizer
___ Compressed Gas	___ Explosive	___ Pyrophoric
___ Flammable Gas	_X_ Health Hazard (Section F)	___ Unstable
___ Flammable Liquid	___ Organic Peroxide	___ Water Reactive
___ Flammable Solid		

___ Based on information presently available, this product does not meet any of the hazard definitions of 29 CFR Section 1910.1200.

N. Additional Comments

SARA 313

As of the preparation date, this product did not contain a chemical or chemicals subject to the reporting requirements of Section 313 of Title III of the Superfund Amendments and Reauthorization Act of 1986 and 40 CFR Part 372.

Phillips Petroleum Company (references to Phillips Petroleum Company or Phillips includes its divisions, affiliates and subsidiaries) believes that the information contained herein (including data and statements) is accurate as of the date hereof. NO WARRANTY OF MERCHANTABILITY, FITNESS FOR ANY PARTICULAR PURPOSE OR ANY OTHER WARRANTY, EXPRESS OR IMPLIED, IS MADE AS CONCERNS THE INFORMATION HEREIN PROVIDED. The information provided herein relates only to the specific product designated and may not be valid where such product is used in combination with any other materials or in any process. Further, since the conditions and methods of use of the product and information referred to herein are beyond the control of Phillips, Phillips expressly disclaims any and all liability as to any results obtained or arising from any use of the product or such information. No statement made herein shall be construed as a permission or recommendation for the use of any product in a manner that might infringe existing patents.

Please reduce your browser font size for better viewing and printing.

MSDS Material Safety Data Sheet

From: Mallinckrodt Baker, Inc.
222 Red School Lane
Phillipsburg, NJ 08865

J.T.Baker

24 Hour Emergency Telephone: 908-859-2151
CHEMTREC: 1-800-424-9300

National Response in Canada
CANUTEC: 613-996-6666

Outside U.S. and Canada
Chemtrec: 202-483-7616

NOTE: CHEMTREC, CANUTEC and National Response Center emergency numbers to be used only in the event of chemical emergencies involving a spill, leak, fire, exposure or accident involving chemicals.

All non-emergency questions should be directed to Customer Service (1-800-582-2537) for assistance.

2-Hexanone

MSDS Number: H2664 — ***Effective Date: 12/08/96***

1. Product Identification

Synonyms: Methyl Butyl Ketone
CAS No.: 591-78-6
Molecular Weight: 100.16
Chemical Formula: CH3CH2CH2CH2COCH3
Product Codes: N230

2. Composition/Information on Ingredients

Ingredient	CAS No	Percent	Hazardous
Methyl n-butyl Ketone	591-78-6	90 - 100%	Yes

3. Hazards Identification

Emergency Overview

WARNING! FLAMMABLE! CAUSES IRRITATION. HARMFUL IF SWALLOWED, INHALED OR ABSORBED THROUGH SKIN. TARGET ORGAN(S):Central nervous system, skin, respiratory system.

J.T. Baker SAF-T-DATA(tm) Ratings (Provided here for your convenience)

Health Rating: 3 - Severe (Poison)
Flammability Rating: 3 - Severe (Flammable)
Reactivity Rating: 1 - Slight
Contact Rating: 2 - Moderate
Lab Protective Equip: GOGGLES & SHIELD; LAB COAT & APRON; VENT HOOD; PROPER GLOVES; CLASS B EXTINGUISHER
Storage Color Code: Red (Flammable)

Potential Health Effects

Inhalation:
Irritation of mucous membranes, severe irritation of respiratory system, may cause narcosis.

Ingestion:
Headache, nausea, vomiting, dizziness, gastrointestinal irritation, central nervous system depression.

Skin Contact:
Severe irritation, prolonged contact may cause dermatitis, May be absorbed through the skin with possible systemic effects.

Eye Contact:
Severe irritation.

Chronic Exposure:
No information found.

Aggravation of Pre-existing Conditions:
No information found.

---

4. First Aid Measures

Inhalation:
If inhaled, remove to fresh air. If not breathing, give artificial respiration. If breathing is difficult, give oxygen. Prompt action is essential.

Ingestion:
Induce vomiting immediately as directed by medical personnel. Never give anything by mouth to an unconscious person. Get medical attention.

Skin Contact:

In case of contact, immediately flush skin with plenty of water for at least 15 minutes while removing contaminated clothing and shoes. Wash clothing before re-use.

Eye Contact:
In case of eye contact, immediately flush with plenty of water for at least 15 minutes.

---

5. Fire Fighting Measures

Fire:
Flash point: 19C (66F) CC Autoignition temperature: 424C (795F) Flammable limits in air % by volume: lel: 1.3; uel: 8.1

Explosion:
Vapors may flow along surfaces to distant ignition sources and flash back. Closed containers exposed to heat may explode. Contact with strong oxidizers may cause fire. Sensitive to static discharge.

Fire Extinguishing Media:
Use alcohol foam, dry chemical or carbon dioxide. (Water may be ineffective.)

Special Information:
Firefighters should wear proper protective equipment and self-contained breathing apparatus with full facepiece operated in positive pressure mode. Move exposed containers from fire area if it can be done without risk. Use water to keep fire-exposed containers cool.

---

6. Accidental Release Measures

Wear self-contained breathing apparatus and full protective clothing. Shut off ignition sources; no flares, smoking or flames in area. Stop leak if you can do so without risk. Use water spray to reduce vapors. Take up with sand or other non-combustible absorbent material and place into container for later disposal. Flush area with water. J. T. Baker SOLUSORB(tm) solvent adsorbent is recommended for spills of this product.

---

7. Handling and Storage

Keep container tightly closed. Store in a cool, dry, well-ventilated, flammable liquid storage area or cabinet. Do not store near oxidizing materials. Bond and ground containers when transferring liquid. Containers of this material may be hazardous when empty since they retain product residues (vapors, liquid); observe all warnings and precautions listed for the product.

---

8. Exposure Controls/Personal Protection

Airborne Exposure Limits:
-OSHA Permissible Exposure Limit (PEL): 5 ppm (TWA) -ACGIH Threshold Limit Value (TLV): 5 ppm (TWA) The TLV listed denotes TLV (skin).

Ventilation System:
A system of local and/or general exhaust is recommended to keep employee exposures below the Airbome Exposure Limits. Local exhaust ventilation is generally preferred because it can control the emissions of the contaminant at its source, preventing dispersion of it into the general work area. Please refer to the ACGIH document, *Industrial Ventilation, A Manual of Recommended Practices*, most recent edition, for details.

Personal Respirators (NIOSH Approved):
For conditions of use where exposure to the substance is apparent, consult an industrial hygienist. For emergencies, or instances where the exposure levels are not known, use a full-facepiece positive-pressure, air-supplied respirator. WARNING: Air purifying respirators do not protect workers in oxygen-deficient atmospheres.

Skin Protection:
Wear impervious protective clothing, including boots, gloves, lab coat, apron or coveralls, as appropriate, to prevent skin contact.

Eye Protection:
Use chemical safety goggles and/or a full face shield where splashing is possible. Maintain eye wash fountain and quick-drench facilities in work area.

---

9. Physical and Chemical Properties

Appearance:
Colorless liquid.

Odor:
Faint ketone odor.

Solubility:
Moderate (1-10%)

Specific Gravity:
0.80

pH:
No information found.

% Volatiles by volume @ 21C (70F):
100

Boiling Point:
127C (261F)

Melting Point:
-57C (-71F)

Vapor Density (Air=1):
3.4

Vapor Pressure (mm Hg):
11 @ 20C (68F)

Evaporation Rate (BuAc=1):
1.2

---

10. Stability and Reactivity

Stability:
Stable under ordinary conditions of use and storage.

Hazardous Decomposition Products:
Carbon monoxide, carbon dioxide.

Hazardous Polymerization:
Will not occur.

Incompatibilities:
Strong oxidizing agents.

Conditions to Avoid:
Heat, flame, other sources of ignition.

---

11. Toxicological Information

--------\Cancer Lists\----------

Ingredient	---NTP Carcinogen--- Known	Anticipated	IARC Category
Methyl n-butyl Ketone (591-78-6)	No	No	None

---

12. Ecological Information

Environmental Fate:
No information found.

Environmental Toxicity:
No information found.

13. Disposal Considerations

Whatever cannot be saved for recovery or recycling should be handled as hazardous waste and sent to a RCRA approved waste facility. Processing, use or contamination of this product may change the waste management options. State and local disposal regulations may differ from federal disposal regulations. Dispose of container and unused contents in accordance with federal, state and local requirements.

14. Transport Information

Domestic (Land, D.O.T.)

Proper Shipping Name: KETONES, LIQUID, N.O.S. (2-HEXANONE)
Hazard Class: 3
UN/NA: UN1224
Packing Group: II
Information reported for product/size: 25G

International (Water, I.M.O.)

Proper Shipping Name: KETONES, LIQUID, N.O.S. (2-HEXANONE)
Hazard Class: 3.2
UN/NA: UN1224
Packing Group: II
Information reported for product/size: 25G

International (Air, I.C.A.O.)

Proper Shipping Name: KETONES, LIQUID, N.O.S. (2-HEXANONE)
Hazard Class: 3.2
UN/NA: UN1224
Packing Group: II
Information reported for product/size: 25G

15. Regulatory Information

```
--------\Chemical Inventory Status - Part 1\--------------------------------
Ingredient                                        TSCA  EC   Japan  Australia
----------------------------------------------    ----  ---  -----  ---------
```

```
Methyl n-butyl Ketone (591-78-6)                    Yes  Yes   Yes      Yes

--------\Chemical Inventory Status - Part 2\--------------------------------
                                                        --Canada--
Ingredient                                          Korea  DSL   NDSL  Phil.
---------------------------------------------       -----  ---   ----  -----
Methyl n-butyl Ketone (591-78-6)                     Yes   Yes   No     Yes

--------\Federal, State & International Regulations - Part 1\----------------
                                            -SARA 302-    ------SARA 313------
Ingredient                                  RQ    TPQ     List  Chemical Catg.
----------------------------------------    ---   -----   ----  ---------------
Methyl n-butyl Ketone (591-78-6)            No    No      No         No

--------\Federal, State & International Regulations - Part 2\----------------
                                                          -RCRA-    -TSCA-
Ingredient                                  CERCLA        261.33     8(d)
----------------------------------------    ------        ------    ------
Methyl n-butyl Ketone (591-78-6)            No            No         No


Chemical Weapons Convention:  No     TSCA 12(b):  Yes    CDTA:  No
SARA 311/312:  Acute: Yes      Chronic: Yes  Fire: Yes Pressure: No
Reactivity: No          (Pure / Liquid)
```

Australian Hazchem Code: No information found.
Poison Schedule: No information found.

WHMIS:
This MSDS has been prepared according to the hazard criteria of the Controlled Products Regulations (CPR) and the MSDS contains all of the information required by the CPR.

---

16. Other Information

NFPA Ratings: Health: 2 **Flammability:** 3 **Reactivity:** 0

Label Hazard Warning:
WARNING! FLAMMABLE! CAUSES IRRITATION. HARMFUL IF SWALLOWED, INHALED OR ABSORBED THROUGH SKIN. TARGET ORGAN(S):Central nervous system, skin, respiratory system.

Label Precautions:
Keep away from heat, sparks, flame. Do not get in eyes, on skin, on clothing. Avoid breathing vapor. Keep in tightly closed container. Use with adequate ventilation. Wash thoroughly after handling. In case of fire, use alcohol foam, dry chemical, carbon dioxide - water may be ineffective. In case of spill, soak up with sand or earth. Flush spill area with water.

Label First Aid:
If swallowed, induce vomiting immediately as directed by medical personnel. Never give

anything by mouth to an unconscious person. If inhaled, remove to fresh air. If not breathing, give artificial respiration. If breathing is difficult, give oxygen. Prompt action is essential. In case of contact, immediately flush eyes or skin with plenty of water for at least 15 minutes while removing contaminated clothing and shoes. Wash clothing before reuse.

Product Use:
Laboratory Reagent.

Revision Information:
Pure. New 16 section MSDS format, all sections have been revised.

Disclaimer:
****
Mallinckrodt Baker, Inc. provides the information contained herein in good faith but makes no representation as to its comprehensiveness or accuracy. This document is intended only as a guide to the appropriate precautionary handling of the material by a properly trained person using this product. Individuals receiving the information must exercise their independent judgment in determining its appropriateness for a particular purpose. MALLINCKRODT BAKER, INC. MAKES NO REPRESENTATIONS OR WARRANTIES, EITHER EXPRESS OR IMPLIED, INCLUDING WITHOUT LIMITATION ANY WARRANTIES OF MERCHANTABILITY, FITNESS FOR A PARTICULAR PURPOSE WITH RESPECT TO THE INFORMATION SET FORTH HEREIN OR THE PRODUCT TO WHICH THE INFORMATION REFERS. ACCORDINGLY, MALLINCKRODT BAKER, INC. WILL NOT BE RESPONSIBLE FOR DAMAGES RESULTING FROM USE OF OR RELIANCE UPON THIS INFORMATION.
****

Prepared by: Strategic Services Division
Phone Number: (314) 539-1600 (U.S.A.)

MSDS - NAPHTHALENE

---

1 - PRODUCT IDENTIFICATION

PRODUCT NAME: NAPHTHALENE
FORMULA: C10H8
FORMULA WT: 128.18
CAS NO.: 00091-20-3
NIOSH/RTECS NO.: QJ0525000
COMMON SYNONYMS: NAPHTHALIN, NAPHTHENE, CAMPHOR TAR, MOTH BALLS
PRODUCT CODES: 2718
EFFECTIVE: 09/03/86
REVISION #02

PRECAUTIONARY LABELLING

BAKER SAF-T-DATA(TM) SYSTEM

HEALTH	-	1	SLIGHT
FLAMMABILITY	-	2	MODERATE
REACTIVITY	-	0	NONE
CONTACT	-	1	SLIGHT

HAZARD RATINGS ARE 0 TO 4 (0 = NO HAZARD; 4 = EXTREME HAZARD).

LABORATORY PROTECTIVE EQUIPMENT

SAFETY GLASSES; LAB COAT

PRECAUTIONARY LABEL STATEMENTS

CAUTION
COMBUSTIBLE

KEEP AWAY FROM HEAT, SPARKS, FLAME.
KEEP IN TIGHTLY CLOSED CONTAINER. WASH THOROUGHLY AFTER HANDLING. IN CASE OF FIRE, SOAK WITH WATER. IN CASE OF SPILL, SWEEP UP AND REMOVE. FLUSH SPILL AREA WITH WATER.

SAF-T-DATA(TM) STORAGE COLOR CODE: RED (FLAMMABLE)

---

2 - HAZARDOUS COMPONENTS

COMPONENT	%	CAS NO.
NAPHTHALENE	90-100	91-20-3

---

3 - PHYSICAL DATA

BOILING POINT: 218 C (424 F)
VAPOR PRESSURE(MM HG): 0.05

MELTING POINT: 80 C (176 F)
VAPOR DENSITY(AIR=1): 4.42

SPECIFIC GRAVITY: 1.14 (H2O=1)
EVAPORATION RATE: N/A (BUTYL ACETATE=1)

SOLUBILITY(H2O): NEGLIGIBLE (LESS THAN 0.1 %) % VOLATILES BY VOLUME: N/A

APPEARANCE & ODOR: WHITE CRYSTALLINE VOLATILE SOLID WITH THE ODOR OF MOTH BALLS

4 - FIRE AND EXPLOSION HAZARD DATA

FLASH POINT (CLOSED CUP 88 C (190 F) NFPA 704M RATING: 2-2-0

FLAMMABLE LIMITS: UPPER - 5.9 % LOWER - 0.9 %

FIRE EXTINGUISHING MEDIA
USE WATER SPRAY, CARBON DIOXIDE, DRY CHEMICAL OR ORDINARY FOAM.

SPECIAL FIRE-FIGHTING PROCEDURES
FIREFIGHTERS SHOULD WEAR PROPER PROTECTIVE EQUIPMENT AND SELF-CONTAINED (POSITIVE PRESSURE IF AVAILABLE) BREATHING APPARATUS WITH FULL FACEPIECE. MOVE EXPOSED CONTAINERS FROM FIRE AREA IF IT CAN BE DONE WITHOUT RISK. USE WATER TO KEEP FIRE-EXPOSED CONTAINERS COOL.

UNUSUAL FIRE & EXPLOSION HAZARDS
CLOSED CONTAINERS EXPOSED TO HEAT MAY EXPLODE.
CONTACT WITH STRONG OXIDIZERS MAY CAUSE FIRE OR EXPLOSION.

5 - HEALTH HAZARD DATA

THRESHOLD LIMIT VALUE (TLV/TWA): 50 MG/M3 (10 PPM)

SHORT-TERM EXPOSURE LIMIT (STEL): 75 MG/M3 (15 PPM)

PERMISSIBLE EXPOSURE LIMIT (PEL): 50 MG/M3 (10 PPM)

TOXICITY: LD50 (ORAL-RAT) (MG/KG) - 1780
LD50 (SCU-MOUSE) (MG/KG) - 969
LD50 (IV-MOUSE) (MG/KG) - 100

CARCINOGENICITY: NTP: NO IARC: NO Z LIST: NO OSHA REG: NO

EFFECTS OF OVEREXPOSURE
CONTACT WITH SKIN OR EYES MAY CAUSE IRRITATION.
INGESTION MAY CAUSE NAUSEA, VOMITING, HEADACHES, DIZZINESS, GASTROINTESTINAL IRRITATION.

TARGET ORGANS
EYES, SKIN, BLOOD, LIVER, KIDNEYS, CENTRAL NERVOUS SYSTEM

MEDICAL CONDITIONS GENERALLY AGGRAVATED BY EXPOSURE
NONE IDENTIFIED

ROUTES OF ENTRY
INHALATION, INGESTION, ABSORPTION, EYE CONTACT, SKIN CONTACT

EMERGENCY AND FIRST AID PROCEDURES
CALL A PHYSICIAN.
IF SWALLOWED, DO NOT INDUCE VOMITING.
IF INHALED, REMOVE TO FRESH AIR. IF NOT BREATHING, GIVE ARTIFICIAL RESPIRATION. IF BREATHING IS DIFFICULT, GIVE OXYGEN.
IN CASE OF CONTACT, IMMEDIATELY FLUSH EYES WITH PLENTY OF WATER FOR AT LEAST 15 MINUTES. FLUSH SKIN WITH WATER.

6 - REACTIVITY DATA

STABILITY: STABLE HAZARDOUS POLYMERIZATION: WILL NOT OCCUR

CONDITIONS TO AVOID: HEAT, FLAME, SOURCES OF IGNITION

INCOMPATIBLES: STRONG OXIDIZING AGENTS

7 - SPILL AND DISPOSAL PROCEDURES

STEPS TO BE TAKEN IN THE EVENT OF A SPILL OR DISCHARGE
WEAR SUITABLE PROTECTIVE CLOTHING. SHUT OFF IGNITION SOURCES; NO FLARES, SMOKING, OR FLAMES IN AREA. WITH CLEAN SHOVEL, CAREFULLY PLACE MATERIAL INTO CLEAN, DRY CONTAINER AND COVER; REMOVE FROM AREA. FLUSH SPILL AREA WITH WATER.

DISPOSAL PROCEDURE
DISPOSE IN ACCORDANCE WITH ALL APPLICABLE FEDERAL, STATE, AND LOCAL ENVIRONMENTAL REGULATIONS.

EPA HAZARDOUS WASTE NUMBER: U165 (TOXIC WASTE)

8 - PROTECTIVE EQUIPMENT

VENTILATION: USE GENERAL OR LOCAL EXHAUST VENTILATION TO MEET TLV REQUIREMENTS.

RESPIRATORY PROTECTION: RESPIRATORY PROTECTION REQUIRED IF AIRBORNE CONCENTRATION EXCEEDS TLV. AT CONCENTRATIONS UP TO 500 PPM, A CHEMICAL CARTRIDGE RESPIRATOR WITH ORGANIC VAPOR CARTRIDGE IS RECOMMENDED. ABOVE THIS LEVEL, A SELF-CONTAINED BREATHING APPARATUS IS RECOMMENDED.

EYE/SKIN PROTECTION: SAFETY GLASSES WITH SIDESHIELDS, RUBBER GLOVES ARE RECOMMENDED.

9 - STORAGE AND HANDLING PRECAUTIONS

SAF-T-DATA(TM) STORAGE COLOR CODE: RED (FLAMMABLE)

SPECIAL PRECAUTIONS
KEEP CONTAINER TIGHTLY CLOSED. STORE IN COOL, DRY, WELL-VENTILATED AREA AWAY FROM HEAT, SPARKS, OR FLAME.

10 - TRANSPORTATION DATA AND ADDITIONAL INFORMATION

DOMESTIC (D.O.T.)

PROPER SHIPPING NAME	NAPHTHALENE (AIR AND WATER ONLY)
HAZARD CLASS	ORM-A
UN/NA	UN1334
LABELS	NONE
REPORTABLE QUANTITY	100 LBS.

INTERNATIONAL (I.M.O.)

PROPER SHIPPING NAME	NAPHTHALENE, CRUDE OR REFINED
HAZARD CLASS	4.1
UN/NA	UN1334
LABELS	FLAMMABLE SOLID

Material Safety Data Sheet

n-PROPYLBENZENE

April 30, 1996

PHILLIPS CHEMICAL COMPANY
A Division of Phillips Petroleum Company
Bartlesville, Oklahoma 74004

PHONE NUMBERS
Emergency: (918) 661-8118
Technical Services: (918) 661-9091
For Additional MSDSs: (918) 661-7297

A. Product Identification

Synonyms: 1-Phenylpropane; normal-Propyl Benzene; n-Propylbenzene
Chemical Name: 1-Phenylpropane
Chemical Family: Aromatic Hydrocarbon
Chemical Formula: C3H7C6H5
CAS Reg. No.: 103-65-1
Product No.: A65700

Product and/or Components Entered on EPA's TSCA Inventory: YES

This product is in U.S. commerce, and is listed in the Toxic Substances Control Act (TSCA) Inventory of Chemicals; hence, it may be subject to applicable TSCA provisions and restrictions.

B. Components

Ingredients	CAS Number	% By Wt.	OSHA PEL	ACGIH TLV
n-Propylbenzene	103-65-1	>98	NE	NE
Toluene	108-88-3	< 1.5	100 ppm	50 ppm
3-Phenylpentane	1196-58-3	< 1.5	NE	NE

C. Personal Protection Information

Ventilation: Use adequate ventilation to control concentration below recommended exposure limits.

Respiratory Protection: For concentrations exceeding the recommended exposure limit, use NIOSH/MSHA approved air purifying respirator.

Eye Protection: Use chemical goggles. For splash protection, use chemical goggles and face shield.

Skin Protection: Use gloves resistant to the material being used. (Nitrile). Use protective garments to prevent excessive skin contact.

NOTE: Personal protection information shown in Section C is based upon general information as to normal uses and conditions. Where special or unusual uses or conditions exist, it is suggested that the expert assistance of an industrial hygienist or other qualified professional be sought.

D. Handling and Storage Precautions

Do not get in eyes, on skin or on clothing. Do not breathe vapors, mist, fume or dust. Do not swallow. May be aspirated into lungs. Wear protective equipment and/or garments described in Section C if exposure conditions warrant. Wash thoroughly after handling. Launder contaminated clothing before reuse. Use only with adequate ventilation.

Keep away from heat, sparks, and flames. Bond and ground during transfer. Store in a well-ventilated area. Store in a closed container.

E. Reactivity Data

Stability: Stable
Conditions to Avoid: Not Applicable
Incompatibility (Materials to Avoid): Oxygen and strong oxidizing agents

Hazardous Polymerization: Will Not Occur
Conditions to Avoid: Not Applicable
Hazardous Decomposition Products: Carbon oxides formed when burned.

F. Health Hazard Data

Recommended Exposure Limits:

The Company recommended exposure limit is 100 ppm for n-Propylbenzene.

Acute Effects of Overexposure:

Eye: Vapor may be irritating and cause excessive tearing. Liquid may be moderately irritating.

Skin: Liquid may produce moderate irritation.

Inhalation: Vapor may be irritating to the mucous membranes of the nose, throat and upper respiratory tract. Fatigue, vertigo, chest constriction are central nervous system affects which may appear gradually after prolonged exposure.

Ingestion: Depression and central nervous system effects. If swallowed, may be aspirated resulting in inflammation and possible fluid accumulation in the lungs.

Subchronic and Chronic Effects of Overexposure:

Exposure of pregnant rats during gestation to toluene at levels 250 ppm and higher produced some maternal toxicity and embryo/fetotoxicity. A lifetime inhalation study in rats did not show any toxic effects even at the high dose of 300 ppm.

Behavioural signs of hearing loss were observed in rats exposed to toluene subchronically at levels of 1000 ppm or more. Comparable effects have not been reported in humans.

Other Health Effects:

A Toxicity Study Summary for Toluene is available upon request.

Health Hazard Categories:

	Animal	Human		Animal	Human
Known Carcinogen	___	___	Toxic	___	___
Suspect Carcinogen	___	___	Corrosive	___	___
Mutagen	___	___	Irritant	___	___
Teratogen	___	___	Target Organ Toxin	_X_	_X_
Allergic Sensitizer	___	___	Specify - Lung - Aspiration Hazard; Kidney Toxin		
Highly Toxic	___	___			

First Aid and Emergency Procedures:

Eye: Flush eyes with running water for at least fifteen minutes. If irritation or adverse symptoms develop, seek medical attention.

Skin: Wash skin with soap and water for at least fifteen minutes. If irritation or adverse symptoms develop, seek medical attention.

Inhalation: Remove from exposure. If breathing is difficult, give oxygen. If breathing ceases, administer artificial respiration followed by oxygen. Seek immediate medical attention.

Ingestion: Do not induce vomiting. Seek immediate medical attention.

Note to Physician: Gastric lavage using a cuffed endotracheal tube may be performed at your discretion.

G. Physical Data

Appearance:	Clear colorless liquid
Odor:	Mild
Boiling Point:	319F (159C)
Vapor Pressure:	0.14 psia at 100F (37.8C)
Vapor Density (Air = 1):	2.9
Solubility in Water:	Negligible
Specific Gravity (H2O = 1):	0.87 at 60/60F (16/16C)
Percent Volatile by Volume:	100
Evaporation Rate (Ethyl Ether = 1):	<1
Viscosity:	Not Established

H. Fire and Explosion Data

Flash Point (Method Used):	86F (30C)(TCC, ASTM D56)
Flammable Limits (% by Volume in Air):	LEL - Not Established UEL - Not Established
Fire Extinguishing Media:	Dry chemical, carbon dioxide, alcohol foam
Special Fire Fighting Procedures:	Evacuate area of all unnecessary personnel. Shut off source, if possible. Wear protective equipment and/or garments described in Section C if exposure conditions warrant. Use NIOSH/MSHA approved self-contained breathing apparatus and other

protective equipment and/or garments described in Section C if conditions warrant. Water fog or spray may be used to cool exposed equipment and containers. Do not spray water directly on fire - product will float and could be reignited on surface of water.

Fire and Explosion Hazards: Carbon oxides formed when burned.

I. Spill, Leak and Disposal Procedures

Precautions Required if Material is Released or Spilled:
Evacuate area of all unnecessary personnel. Wear protective equipment and/or garments described in Section C if exposure conditions warrant. Shut off source, if possible and contain spill. Protect from ignition. Keep out of water sources and sewers. Absorb in a dry, inert material (sand, clay, etc). Transfer to disposal drums using non-sparking equipment.

Waste Disposal (Insure Conformity with all Applicable Disposal Regulations):
Incinerate or place in permitted waste management facility.

J. DOT Transportation

Shipping Name:	n-Propyl benzene
Hazard Class:	3 (Flammable liquid)
ID Number:	UN 2364
Packing Group:	III
Marking:	n-Propyl benzene, UN 2364, Marine Pollutant**
Label:	Flammable liquid
Placard:	Flammable/2364
Hazardous Substance/RQ:	Toluene/1000#
Shipping Description:	n-Propyl benzene, 3 (Flammable liquid), UN 2364, PG III, RQ*, Marine Pollutant**
Packaging References:	49 CFR 173.150, 173.203, 173.241

* Enter the letters "RQ" and the name of the hazardous substance as shown only if the hazardous substance is present in a quantity, in one package, which equals or exceeds the reportable quantity (RQ) shown for the hazardous substance.

** Marine pollutant mark and shipping paper notation required for the all bulk domestic shipments and for non-bulk shipments by water.

K. RCRA Classification - Unadulterated Product as a Waste

Ignitable (D001)

Prior to disposal, consult your environmental contact to determine if the TCLP (Toxicity Characteristic Leaching Procedure, EPA Test Method 1311) is required. Reference 40 CFR Part 261.

L. Protection Required for Work on Contaminated Equipment

Contact immediate supervisor for specific instructions before work is initiated. Wear protective equipment and/or garments described in

Section C if exposure conditions warrant.

M. Hazard Classification

_X_ This product meets the following hazard definition(s) as defined by the Occupational Safety and Health Hazard Communication Standard (29 CFR Section 1910.1200):

_X_ Combustible Liquid	___ Flammable Aerosol	___ Oxidizer
___ Compressed Gas	___ Explosive	___ Pyrophoric
___ Flammable Gas	_X_ Health Hazard (Section F)	___ Unstable
___ Flammable Liquid	___ Organic Peroxide	___ Water Reactive
___ Flammable Solid		

___ Based on information presently available, this product does not meet any of the hazard definitions of 29 CFR Section 1910.1200.

N. Additional Comments

SARA 313

This product contains the following chemical or chemicals subject to the reporting requirements of Section 313 of Title III of the Superfund Amendments and Reauthorization Act of 1986 and 40 CFR Part 372. (See Section B).

Toluene

NFPA 704 Hazard Codes - - - - - - - - Signals

		Least - 0
Health	: 2	Slight - 1
Flammability	: 3	Moderate - 2
Reactivity	: 0	High - 3
Special Haz.	: -	Extreme - 4

Phillips Petroleum Company (references to Phillips Petroleum Company or Phillips includes its divisions, affiliates and subsidiaries) believes that the information contained herein (including data and statements) is accurate as of the date hereof. NO WARRANTY OF MERCHANTABILITY, FITNESS FOR ANY PARTICULAR PURPOSE OR ANY OTHER WARRANTY, EXPRESS OR IMPLIED, IS MADE AS CONCERNS THE INFORMATION HEREIN PROVIDED. The information provided herein relates only to the specific product designated and may not be valid where such product is used in combination with any other materials or in any process. Further, since the conditions and methods of use of the product and information referred to herein are beyond the control of Phillips, Phillips expressly disclaims any and all liability as to any results obtained or arising from any use of the product or such information. No statement made herein shall be construed as a permission or recommendation for the use of any product in a manner that might infringe existing patents.

MATERIAL SAFETY DATA SHEET

NFPA RATING

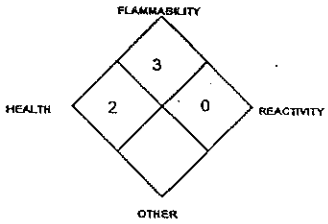

Prepared to U.S. OSHA, CMA, ANSI and Canadian WHMIS Standards

PART I *What is the material and what do I need to know in an emergency?*

1. PRODUCT IDENTIFICATION

CHEMICAL NAME; CLASS: **TOLUENE**
C_7H_8
Document Number: 1063

PRODUCT USE: For general analytical/synthetic chemical uses.

SUPPLIER/MANUFACTURER'S NAME: AIRGAS INC.
ADDRESS: 259 Radnor-Chester Road
Suite 100
Radnor, PA 19087-5240

BUSINESS PHONE: 1-610-687-5253
EMERGENCY PHONE: CHEMTREC: 1-800-424-9300

DATE OF PREPARATION: May 14, 1997
DATE OF FIRST REVISION: December 16, 1997

2. COMPOSITION and INFORMATION ON INGREDIENTS

CHEMICAL NAME	CAS #	mole %	EXPOSURE LIMITS IN AIR					
			ACGIH		OSHA		IDLH ppm	OTHER
			TLV ppm	STEL ppm	PEL ppm	STEL ppm		
Toluene	108-88-3	99.9%	50, Skin A4, Not Classifiable as a Human Carcinogen	NE	200 100 (Vacated 1989 PEL)	300, C 500, 10 min peak per 8 hour shift 150 (Vacated 1989 PEL)	500	NIOSH RELs: TWA: 100 ppm STEL: 150 ppm DFG MAKs: 50 ppm Carcinogen: EPA-D IARC-3

NE = Not Established C = Ceiling Limit See Section 16 for Definitions of Terms Used.
NOTE: All WHMIS required information is included. It is located in appropriate sections based on the ANSI Z400.1-1993 format.

3. HAZARD IDENTIFICATION

EMERGENCY OVERVIEW: Toluene is a colorless, flammable, toxic liquid, with gasoline-like odor. Inhalation of vapors of Toluene can affect the central nervous system. Symptoms of central nervous system overexposure can include headache, drowsiness, dizziness, fatigue, nausea and weakness. Skin and eye contact can be irritating. This liquid is very flammable; vapors are heavier than air and may travel long distances to source of ignition and flashback. If involved in a fire Toluene will decompose to produce toxic gases (e.g., carbon monoxide, carbon dioxide, reactive hydrocarbons and aldehydes). Toluene is not reactive under normal circumstances. Persons responding to releases of this product must have adequate fire protection for the specific emergency situation.

SYMPTOMS OF OVEREXPOSURE BY ROUTE OF EXPOSURE: The most significant routes of occupational overexposure for Toluene are by inhalation, and contact with skin or eyes. The following paragraphs describe symptoms of exposure by route of exposure.

INHALATION: Exposures to high concentrations of vapors of Toluene can cause central nervous system effects. Symptoms of central nervous system effects are related to exposure concentrations. The effects associated with various levels of Toluene vapors are as follows:

CONCENTRATION	SYMPTOMS OF EXPOSURE
~50 ppm:	Slight drowsiness and headache.
50-100 ppm:	Irritation of the nose, throat and respiratory tract.
Above 100 ppm:	Fatigue and dizziness.
Over 200 ppm:	Symptoms similar to drunkenness, giddiness, numbness, and mild nausea.
Over 500 ppm:	Mental confusion and incoordination, loss of appetite, a bad taste.
10,000 ppm (est)	At this concentration Toluene causes visual disturbances and further depression of the central nervous system which can result in unconsciousness and death.

HAZARDOUS MATERIAL INFORMATION SYSTEM

HEALTH	(BLUE)	2
FLAMMABILITY	(RED)	3
REACTIVITY	(YELLOW)	0
PROTECTIVE EQUIPMENT		C

EYES	RESPIRATORY	HANDS	BODY
	See Section 8		See Section 8

For routine industrial applications

See Section 16 for Definition of Ratings

In an industrial setting, the most serious overexposures have occurred when vapors of Toluene have accumulated in small, confined spaces or other poorly-ventilated areas. Liver and kidney damage as well as disturbances to the heart have been reported from overexposure to vapors of Toluene, in cases of sniffing abuse of glues. Sniffing of glues containing Toluene can lead to the three sets of symptoms, as described below:

- Severe muscle weakness leading to limb paralysis, associated with hypokalemia (deficiency of potassium in the blood) due to renal tubular acidosis. Cardiac arrhythmias often accompany the hypokalemia .
- Gastrointestinal complaints, including abdominal pain, nausea, vomiting, and hematemesis (vomiting of blood).
- Neuropsychiatric complaints including:
  - a) lethargy, hallucinations, coma, or
  - b) headache, dizziness, syncope (loss of consciousness due to sudden lack of blood supply to brain), or
  - c) paresthesias (morbid sensations) and peripheral neuropathy (tingling in the extremities), or
  - d) cerebellar ataxia (incoordination of voluntary muscular movements) and other cerebellar signs.

The symptoms described above may potentially occur after long-term inhalation overexposures to Toluene in occupational settings, as well as inhalation of fumes from glues.

CONTACT WITH SKIN or EYES: Initial contact with the skin can cause mild irritation. Prolonged contact can result in a burning sensation and reddening of the skin. Toluene is a defatting agent, removing oils from the skin and causing red cracked and dry skin. Prolonged or repeated contact with the skin will cause dermatitis. Very short exposure (3-5 minutes) to the eyes of vapors of Toluene at a concentration of 300 ppm causes slight irritation. Longer exposures (6-7 hours) to levels above 100 ppm will cause irritation. Contact of the liquid the eyes will be irritating, but will not cause permanent damage.

SKIN ABSORPTION: Toluene can be somewhat absorbed through the skin, which may result in irritation at the site of absorption. Symptoms similar to those described for "Inhalation" may also occur, especially in cases of severe overexposure.

3. HAZARD IDENTIFICATION (Continued)

INGESTION: Toluene is readily absorbed by the tissues of the digestive system, producing symptoms of central nervous system depression similar to those described in "Inhalation". If ingested, Toluene presents a potential aspiration hazard. The aspiration of Toluene into the lungs can result in severe lung irritation, leading to lung damage; death may result.

INJECTION: Injection is not anticipated to be a significant route of overexposure for Toluene. If Toluene is "injected" (as may occur through punctures by contaminated, sharp objects), symptoms described in "Inhalation" can occur.

OTHER HEALTH EFFECTS: Toluene poisoning can lead to anemia and leukopenia (deficiency of blood corpuscle which protects against disease), which, upon biopsy, has shown bone marrow hypoplasia (failure of new bone marrow to mature). Exposure to other solvents (such as benzene and ethanol) slows the rate of clearance from the body, enhancing the toxicity of Toluene. For further information, see Section 11, Toxicological Information. In rare cases, repeated overexposure to very high concentrations of Toluene has lead to enlargement of the liver.

HEALTH EFFECTS OR RISKS FROM EXPOSURE: An Explanation in Lay Terms. Overexposure to may cause the health effects described below.

ACUTE: Acute inhalation overexposure to Toluene will initially act as a narcotic, possibly leading to coma in extreme cases. Following exposure to high concentrations, victims may be unconscious, and if exposure continues, death can follow from respiratory failure. Contact with the skin can cause irritation and dermatitis. Contact with the eyes is irritating, causing burning and watering of the eyes. Ingestion of Toluene will cause gastric distress and possible severe depression of the central nervous system. Aspiration of Toluene into the lungs, following ingestion can result in severe damage to the lungs; death may result.

CHRONIC: In rare cases, chronic poisoning has lead to anemia and other problems with the blood and bone marrow. Chronic Toluene overexposure may also result in a variety of health problems (e.g., headaches, fatigue, loss of coordination, memory loss, and optic nerve disorders). See Section 11 (Toxicology Information) for additional data.

TARGET ORGANS: Respiratory system, central nervous systems, heart , kidneys, bone marrow, skin, eyes, reproductive system, and liver.

PART II *What should I do if a hazardous situation occurs?*

4. FIRST-AID MEASURES

RESCUERS SHOULD NOT ATTEMPT TO RETRIEVE VICTIMS OF EXPOSURE TO TOLUENE WITHOUT ADEQUATE PERSONAL PROTECTIVE EQUIPMENT. If necessary, a Self-Contained Breathing Apparatus should be worn.

INHALATION: If vapors, mists, or sprays of Toluene are inhaled, remove victim to fresh air. Only trained personnel should administer supplemental oxygen and/or cardio-pulmonary resuscitation if necessary. Remove or cover gross contamination to avoid exposure to rescuers.

SKIN EXPOSURE: If Toluene contaminates the skin, immediately begin decontamination with running water. Minimum flushing is for 15 minutes. Remove exposed or contaminated clothing, taking care not to contaminate eyes. Victim must seek medical attention if any adverse reaction occurs.

EYE EXPOSURE: If Toluene or its vapors enter the eyes, open victim's eyes while under gentle running water. Use sufficient force to open eyelids. Have victim "roll" eyes. Minimum flushing is for 15 minutes. Victim must seek immediate medical attention.

INGESTION: If Toluene is swallowed, CALL PHYSICIAN OR POISON CONTROL CENTER FOR MOST CURRENT INFORMATION. If professional advice is not available, do not induce vomiting. Victim should drink milk, egg whites, or large quantities of water. If vomiting occurs naturally, have victim lean forward to reduce risk of aspiration. Never induce vomiting or give diluents (milk or water) to someone who is unconscious, having convulsions, or who cannot swallow.

Victims of chemical exposure must be taken for medical attention. Rescuers should be taken for medical attention, if necessary. Physicians should refer to "Recommendations to Physicians" in Section 11 (Toxicological Information). Take copy of label and MSDS to health professional with victim.

5. FIRE-FIGHTING MEASURES

FLASH POINT, (Closed Cup): 4.4°C (40°F)
AUTOIGNITION TEMPERATURE: 480°C (896°F)
FLAMMABLE LIMITS (in air by volume, %):

Lower (LEL): 1.2%
Upper (UEL): 7.1%

5. FIRE-FIGHTING MEASURES (Continued)

FIRE EXTINGUISHING MATERIALS:

Water Spray: YES (for cooling only)
Foam: YES
Halon: YES
Carbon Dioxide: YES
Dry Chemical: YES
Other: Any "B" Class.

NFPA RATING

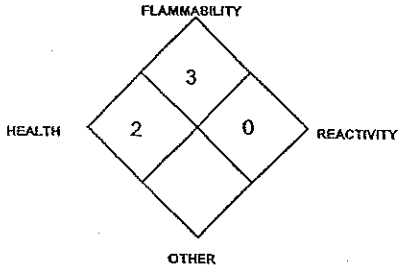

See Section 16 for Definition of Ratings

UNUSUAL FIRE AND EXPLOSION HAZARDS: Toluene is a Class IB flammable liquid and presents a serious fire hazard to firefighters. When involved in a fire, this material ignite and produces toxic gases (e.g., carbon monoxide, carbon dioxide, reactive hydrocarbons and aldehydes). The vapors of Toluene are heavier than air and may spread long distances; distant ignition and flash-back are possible. Toluene can float on water; therefore, water contaminated with this product can spread the flammable liquid and can spread fire. Containers of Toluene, when involved in fire, may rupture or burst in the heat of the fire.

Explosion Sensitivity to Mechanical Impact: Not sensitive.
Explosion Sensitivity to Static Discharge: Toluene can accumulate static charge by flow or agitation; vapors can be ignited by static discharge.

SPECIAL FIRE-FIGHTING PROCEDURES: Eliminate sources of ignition. In the event of fire, cool containers of this product with water to prevent failure. Use a water spray or fog to reduce or direct vapors. Water may not be effective in actually extinguishing a fire involving Toluene, due to its low flash point. Stop the leak or discharge, if possible. For small releases, if it is not possible to stop the leak, and it does not endanger personnel, let the fire burn itself out. Incipient fire responders should wear eye protection. Structural fire fighters must wear Self-Contained Breathing Apparatus and full protective equipment. Large fires should be fought from a distance with an unmanned hose holder or monitor nozzles. If Toluene is involved in a fire, fire run-off water should be contained to prevent possible environmental damage. If necessary, decontaminate fire-response equipment with soap and water solution. For large releases, consider evacuation. Refer to the North American Emergency Response Guidebook (Guide #130) for additional guidance.

6. ACCIDENTAL RELEASE MEASURES

SPILL AND LEAK RESPONSE: Evacuate immediate area. Uncontrolled releases should be responded to by trained personnel using pre-planned procedures. Proper protective equipment should be used. In case of a leak, clear the affected area, protect people, and respond with trained personnel.

Minimum Personal Protective Equipment should be Level **B: triple-gloves (rubber gloves and nitrile gloves, over latex gloves), chemically resistant suit and boots, hard-hat, and Self-Contained Breathing Apparatus.** Monitor the surrounding area for combustible vapor levels. Combustible vapor levels must be below 10% of the LEL for Toluene (LEL = 1.2%) before personnel are permitted to enter the area. If necessary, ventilate area.

Monitoring should be done for the levels of Toluene and oxygen. Colorimetric tubes are available to detect the presence of Toluene. Levels of Toluene should be below levels listed in Section 2 (Composition and Information on Ingredients) and the atmosphere must have at least 19.5 percent oxygen before personnel can be allowed in the area without Self-Contained Breathing Apparatus.

Eliminate all sources of ignition before clean-up operations begin. Use non-sparking tools. Absorb spilled liquid with activated carbon, polypads or other suitable absorbent materials. Prevent material from entering sewer or confined spaces. Decontaminate the area thoroughly. Place all spill residue in an appropriate container and seal. If necessary, decontaminate spill-response equipment with soap and water solution. Dispose of in accordance with Federal, State, and local hazardous waste disposal regulations (see Section 13, Disposal Considerations).

THIS IS A TOXIC, FLAMMABLE LIQUID: Protection of all personnel and the area must be maintained. All responders must be adequately protected from exposure.

PART III *How can I prevent hazardous situations from occurring?*

7. HANDLING and STORAGE

WORK PRACTICES AND HYGIENE PRACTICES: As with all chemicals, avoid getting Toluene ON YOU or IN YOU. Wash thoroughly after chemicals. Do not eat, drink, smoke or apply cosmetics while handling this material. Remove contaminated clothing immediately.

7. HANDLING and STORAGE (Continued)

STORAGE AND HANDLING PRACTICES: All employees who handle this material should be trained to handle it safely. Avoid breathing vapors or mists generated by this product. Use in a well-ventilated location. Cylinders of this product must be properly labeled. If this product is used in other types of containers, only use portable containers and dispensing equipment (faucet, pump, drip can) approved for flammable liquids. Post "NO SMOKING" signs, where appropriate in storage and use areas.

Store cylinders of this product in a cool, dry location, away from direct sunlight, sources of intense heat, or where freezing is possible. Do not allow area where cylinders are stored to exceed 52°C (125°F). Material should be stored in secondary containers, or in a diked area, as appropriate. Store containers away from incompatible chemicals. Keep container tightly closed when not in use. Storage areas should be made of fire-resistant materials. Inspect all incoming containers before storage, to ensure containers are properly labeled and not damaged

Empty containers may contain residual flammable liquid or vapors. Therefore, empty containers should be handled with care. Do not expose "empty" containers to welding touches, or any other source of ignition.

SPECIAL PRECAUTIONS FOR HANDLING CYLINDERS: Protect cylinders of this product against physical damage. If appropriate, cylinders should be stored in an up-right position. Cylinders should be firmly secured to prevent falling or being knocked over. Cylinders can be stored in the open, but in such cases, should be protected against extremes of weather and from the dampness of the ground to prevent rusting. Never tamper with pressure relief devices in valves and cylinders. Electrical equipment should be non-sparking or explosion proof. The following rules are applicable to situations in which cylinders are being used:

Before Use: If appropriate, move cylinders with a suitable hand-truck. Do not drag, slide or roll cylinders. Do not drop cylinders or permit them to strike each other. Secure cylinders firmly. Leave the valve protection cap in-place until cylinder is ready for use.

During Use: Use designated CGA fittings and other support equipment. Do not use adapters. Do not heat cylinder by any means to increase the discharge rate of the product from the cylinder. Use check valve or trap in discharge line to prevent hazardous backflow into the cylinder. Do not use oils or grease on gas-handling fittings or equipment.

After Use: Close main cylinder valve. Replace valve protection cap. Mark empty cylinders "EMPTY".

NOTE: Use only DOT or ASME code containers. Earth-ground and bond all lines and equipment associated with this product. Close valve after each use and when empty. Cylinders must not be recharged except by or with the consent of owner. For additional information refer to the Compressed Gas Association Bulletin SB-2 "*Oxygen Deficient Atmospheres*".

PROTECTIVE PRACTICES DURING MAINTENANCE OF CONTAMINATED EQUIPMENT: Follow practices indicated in Section 6 (Accidental Release Measures). Make certain application equipment is locked and tagged-out safely, if necessary. Decontaminate equipment using soapy water before maintenance begins. Collect all rinsates and dispose of according to applicable Federal, State, or local procedures.

8. EXPOSURE CONTROLS - PERSONAL PROTECTION

VENTILATION AND ENGINEERING CONTROLS: Use with adequate ventilation. Use a mechanical fan or vent area to outside. Where appropriate, use a non-sparking, grounded ventilation system separate from other exhaust ventilation systems. Ensure eyewash/safety shower stations are available near areas where this product is used.

RESPIRATORY PROTECTION: Maintain exposure levels of Toluene below the levels listed in Section 2 (Composition and Information on Ingredients) and oxygen levels above 19.5% in the workplace. Use supplied air respiratory protection if Toluene levels exceed exposure limits and if oxygen level is below 19.5% or during emergency response to a release of this product. If respiratory protection is required, follow the requirements of the Federal OSHA Respiratory Protection Standard (29 CFR 1910.134), or equivalent State standards. The NIOSH respiratory protection recommendations for Toluene are presented on the following page.

CONCENTRATION	RESPIRATORY EQUIPMENT
Up to 500 ppm:	Chemical cartridge respirator with organic vapor cartridges; or gas mask with organic vapor canister, or powered, air-purifying respirator with organic vapor cartridges, or Supplied Air Respirator (SAR), or full-facepiece SCBA.
Emergency or Planned Entry into Unknown Concentration or IDLH Conditions:	Positive-pressure, full facepiece SCBA or positive pressure, full-facepiece Supplied Air Respirator (SAR) with an auxiliary positive pressure SCBA.
Escape:	Gas mask with organic vapor cartridge or escape-type SCBA should be used.
NOTE:	The IDLH concentration for Toluene is 500 ppm.

8. EXPOSURE CONTROLS - PERSONAL PROTECTION (Continued)

EYE PROTECTION: Splash goggles or safety glasses. Face-shields should be worn if contact with the liquid is anticipated.

HAND PROTECTION: Wear leather gloves for handling of cylinders of Toluene. Wear chemically resistant gloves appropriate for Toluene for industrial use. Gloves should have a resistance to breakthrough greater than 8 hours, such as Teflon™ or Viton™. Butyl rubber, natural rubber, neoprene, nitrile rubber, or polyethylene are not recommended. Use triple gloves for spill response (see Section 6, Accidental Release Measures).

BODY PROTECTION: Use body protection appropriate for task. Transfer of large quantities under pressure may require protective equipment appropriate to protect employees from splashes of liquefied product. Safety shoes are recommended when handling cylinders.

9. PHYSICAL and CHEMICAL PROPERTIES

RELATIVE VAPOR DENSITY (air = 1): 3.1
SPECIFIC GRAVITY @ 20°C (68°F) (water = 1): 0.86
SOLUBILITY IN WATER @ 25°C (77°F): 54-58 mg/100 mL
EVAPORATION RATE: 2.24
EXPANSION RATIO: Not applicable.
pH: Not applicable.
FREEZING/MELTING POINT: -95°C (-139°F)
BOILING POINT: 110.6°C (231.1°F)
ODOR THRESHOLD: Not available.
SPECIFIC VOLUME: Not applicable.
LOG COEFFICIENT WATER/OIL DISTRIBUTION: Log P (oct) = 2.11-2.80
VAPOR PRESSURE @ 20°F (68°F) 22 mm Hg: 2.93 kPa

APPEARANCE AND COLOR: Colorless, flammable liquid, with a strong, gasoline-like odor.

HOW TO DETECT THIS SUBSTANCE (warning properties): The odor of Toluene is not a good warning property as it has a variation of odor threshold values. The smell of Toluene may not be noticed after short exposure.

10. STABILITY and REACTIVITY

STABILITY: Normally stable.

DECOMPOSITION PRODUCTS: If Toluene is involved in a fire, it may ignite to yield toxic fumes of carbon monoxide, carbon dioxide, reactive hydrocarbons and aldehydes.

MATERIALS WITH WHICH SUBSTANCE IS INCOMPATIBLE: Toluene is incompatible with strong oxidizers, which increase the risk of fire and explosion. Toluene reacts violently to nitric acid and sulfur dichloride. When combined with sulfuric acid, an exothermic reaction will occur. Toluene will react vigorously with uranium hexafluoride. When mixed with silver perchlorate Toluene forms explosive complexes and with tetranitromethane Toluene forms a sensitive, highly explosive mixture.

HAZARDOUS POLYMERIZATION: Will not occur.

CONDITIONS TO AVOID: Avoid contact with incompatible materials, sparks, flame static discharge and other sources of ignition. Avoid exposing cylinders to extremely high temperatures, which could cause the cylinders to rupture or burst.

PART III *How can I prevent hazardous situations from occurring?*

11. TOXICOLOGICAL INFORMATION

TOXICITY DATA: The following information is available for Toluene.

Eye effects-Human 300 ppm
Skin-Rabbit, adult 435 mg Mild irritation effects
Skin-Rabbit, adult 500 Moderate irritation effects
Eye effects-Rabbit, adult 870 µg Mild irritation effects
Eye effects-Rabbit, adult 2 mg/24 hours Severe irritation effects
Eye effects-Rabbit, adult 100 mg/30S ms Mild irritation effects
oms-grasshopper-Inhalation 562 mg/L
Cytogenetic Analysis-Rat-Subcutaneous 12 g/kg/12 days-Intermittent
Inhalation-Mouse TCLo :400 ppm/7 hours (female 7–16 days post): Reproductive effects
Oral-Mouse TDLo: 9 g/kg (female 6–15 days post): Teratogenic effects
Oral-Human LDLo :50 mg/kg
Inhalation-Human TCLo: 200 ppm: BRN, Central nervous system effects, Blood effects
Inhalation-Man TCLo: 100 ppm: Central nervous system effects
Oral-Rat LD50 :5000 mg/kg
Inhalation-Rat LCLo: 4000 ppm/4 hours
Intraperitoneal-Rat LD50: 1332 mg/kg
Intravenous-Rat LD50: 1960 mg/kg
Unreported-Rat LD50: 6900 mg/kg
Inhalation-Mouse LC50: 400 ppm/24 hours
Intraperitoneal-Mouse LD50: 59 mg/kg
Subcutaneous-Mouse LD50: 2250 mg/kg
Unreported-Mouse LD50: 2 g/kg
Intraperitoneal-Mouse LD50: 640 mg/kg
Inhalation-Rabbit, adult LCLo: 55,000 ppm/40 minutes
Skin-Rabbit, adult LD50: 12,124 mg/kg

11. TOXICOLOGICAL INFORMATION (Continued)

SUSPECTED CANCER AGENT: Toluene is listed as follows:

ACGIH-A4 (Not Classifiable as a Human Carcinogen)
EPA-D (Not Classifiable as to Human Carcinogenicity)
IARC-3 (Not Classifiable as to Human Carcinogenicity).

Toluene is not found on the following lists: NTP, OSHA, CAL/OSHA; therefore is not considered to be, nor suspected to be a cancer-causing agent by these agencies.

IRRITANCY OF PRODUCT: Toluene is mildly irritating to the skin, eyes, and other contaminated tissue.

SENSITIZATION OF PRODUCT: Toluene is not known to cause respiratory system or skin sensitization in humans. Cardiac sensitization to stimulants (e.g., epinephrine, ephedrine) is a possible result of severe or chronic overexposure.

REPRODUCTIVE TOXICITY INFORMATION: Listed below is information concerning the effects of Toluene on the human reproductive system.

Mutagenicity: Toluene was not mutagenic in most of the numerous in vivo and in vitro tests. There is some evidence that it can cause chromosome damage in vivo when administered to mice by injection, although conflicting results have been obtained.
Embryotoxicity: Toluene is not reported to cause embryotoxic effects in humans. However, there is some evidence of embryotoxic effects in animals during clinical studies. Refer to "Teratogenicity" for additional information.
Teratogenicity: Toluene is not reported to cause teratogenic effects in humans. Many studies have been conducted on rats, nice, and rabbits (primarily through inhalation exposure). Toluene did not cause birth defects, but exposures of pregnant rats to concentrations greater than 500 ppm resulted in fetotoxicity effects (e.g., reduced birth weights, delay in bone formation).
Reproductive Toxicity: Data on reproductive effects are available from clinical studies involving test animals exposed to relatively high doses of Toluene,

A mutagen is a chemical which causes permanent changes to genetic material (DNA) such that the changes will propagate through generation lines. An embryotoxin is a chemical which causes damage to a developing embryo (i.e. within the first eight weeks of pregnancy in humans), but the damage does not propagate across generational lines. A teratogen is a chemical which causes damage to a developing fetus, but the damage does not propagate across generational lines. A reproductive toxin is any substance which interferes in any way with the reproductive process.

MEDICAL CONDITIONS AGGRAVATED BY EXPOSURE: Pre-existing respiratory conditions, central nervous system, liver, kidney, and cardio-vascular conditions may be aggravated by severe or chronic overexposure to this product. Skin disorders may also be aggravated by exposures to Toluene.

RECOMMENDATIONS TO PHYSICIANS: The following guidelines are derived from "Clinical Toxicology of Commercial Chemical Products" (5th edition, 1984).

- Check for signs of impending pulmonary edema.
- Because of the aspiration hazard, avoid emetic drugs, whenever practical.
- For ingestion overexposures in which Toluene contains another toxic component and induction of emesis is advisable: If the patient is not drowsy, comatose, or in respiratory difficulty, induce vomiting. If necessary, as an alternative treatment, remove Toluene from the stomach via gastric lavage. One or two ounces of mineral oil may be instilled and left in the stomach at the completion of lavage.
- Avoid epinephrine because of its possible adverse effect on the sensitized myocardium. Avoid all digestible fats, oils and alcohol, which may promote the absorption of Toluene in the intestinal system.
- If eyes or skin are affected, wash thoroughly and apply a bland analgetic ointment.
- Because of the possibility of ventricular fibrillation, monitor the ECG continuously and be prepared to administer external cardiac massage.
- In chronic solvent abusers, correct dehydration, acidosis, hypokalemia and hypophosphatemia. Usually toxic signs and symptoms (except those due to neuropathies and to cerebellar lesions) disappear within a few days after fluid and electrolyte abnormalities are corrected.

BIOLOGICAL EXPOSURE INDICES (BEIs): The following Biological Exposure Indices (BEIs) are currently applicable for Toluene.

CHEMICAL DETERMINANT	SAMPLING TIME	BEI
TOLUENE		
• Hippuric acid in urine	• End of shift	• 2.5 g/g creatinine
• Toluene in venous blood	• Last 4 hours of shift	• 1 mg/L
• Toluene in end-exhaled air	• End of shift	• Refer to current TLV list.

12. ECOLOGICAL INFORMATION

ENVIRONMENTAL STABILITY: Toluene will be degraded over time into other organic compounds. The following environmental data are available for Toluene.

TOLUENE: K_{OC} = 2.73. Water Solubility = 534 mg/L. Biological Half-Life = 0.083 days. Bioconcentration Factors = 13.2 (eels, Anguilla japonica); 1.67 (Manila clam (Tapes semidecussata); 4.2 (mussel, Mytilus edulis); 380 (algae, Chorella fusca); 90 (golden ide fish). Toluene is rapidly volatilized from water and undergoes moderate biodegradation. The half-life in water is on the order of days to weeks.

EFFECT OF MATERIAL ON PLANTS or ANIMALS: Toluene may be harmful or fatal to contaminated plant and animal-life (especially if large quantities of Toluene are released). Refer to Section 11 (Toxicology Information) for information on test animals. The following information is available for Toluene's effects on plant-life.

STUDY # 1: Suspensions of sunflower leaves were prepared from 3-5 week old plants. Two ml of toluene was applied to 5 grams of the fresh sunflower leaves. The rate of electrolyte loss caused by this treatment was 435 (min -1 x E-4), while the rate of electrolyte loss in the control groups ranged from 16-21 (min -1 x E-4).

STUDY # 2: Three tomatoes, 20 carrots, and 12 barley seedlings were tested 32, 32, and 14 days after planting. Plants were exposed to 6.4, 12.0, or 24.1 mg/l Toluene for 1/4, 1/2, 1, and 2 hours. Toluene was observed to toxic at concentrations of 6.4 to 12.0 mg/l after 15 minutes of exposure. Fifteen minutes of exposure at 12 mg/l toluene produced 50, 0, and 60% injury to tomato, carrot, and barley, respectively. For lethality to occur at 12.0 mg/l, barley required 1 hour, tomato 2 hours, and carrot over 2 hours. At 6.4 mg/l toluene, percentage of injury to barley after a 2-hour exposure was reduced from 100% to 15% (lethal). Toluene entered the plant rapidly through the cuticle and stomata Symptoms of injury included a darkening of the tips of the youngest leaves. This darkening spread to the older leaves. There was a loss of turgor, with draping stems and leaves. In bright sunlight, chlorophyll was destroyed.

STUDY # 3: Toluene was mixed with Lakeland sand or Davidson soil at rates of 0 ppm, 200 ppm, 2,000 ppm, and 20,000 ppm. The soils were immediately planted with 4 corn, 6 soybean, and fescue seed. Plants harvested at the end of 3 weeks. A 10% yield reduction on the Lakeland soil was evident at 200 ppm for corn, 800 ppm in soybean and 2,000 ppm in fescue. At 2,000 ppm or more, there was at least 50% or more reduction in the fresh weight of all three crops. There were no visible symptoms of toluene toxicity above the critical levels. The critical phytotoxic limit on Lakeland sand was 200 to 2,000 ppm of toluene while on the Davidson soil the was 2,000 to 20,000 ppm toluene.

EFFECT OF CHEMICAL ON AQUATIC LIFE: Toluene can be harmful or fatal to contaminated aquatic plant and animal life. Toluene floats on water, and can potentially form slicks which are capable of creating oxygen-deprived waterways which can contaminate coastal and shore life. The following aquatic toxicity data are available for Toluene.

EC_{50} (*Pimephales promelas*, fathead minnow - embryos/larvae/minnows) = 55-72 mg/L/25-36 mg/L/26-31 mg/L - 96 hours. Effect - loss of equilibrium.
LC_{50} (*Pimephales promelas*, fathead minnow) =36.2 mg/L/96 hours
LC_{50} (Bluegill) = 17 mg/L/24 hours; 13 mg/L/96 hours; 21-23 °C
LC_{50} (*Palaemonetes pugio*, grass shrimp) = 9.5 ppm/96 hours
LC_{50} (*Cancer magister*, crab larvae) = 28 ppm/96 hours
LC_{50} (*Crangon francisorium*, shrimp) = 4.3 ppm. 96 hours
TLm (fathead minnow) = 56-34 mg/L; 24-96 hours
TLm (*Lebistes reticulats*, guppy): 63-59 mg/L; 24-96 hours
LC_{50} (Channel Catfish) = 240 mg/L
LC_{50} (*Pimephales promelas*, fathead minnow) = 534.27 mg/L; 96 hours
LC_{50} (*Carassium auratas*, goldfish) = 57.68 mg/L; 96 hours
LC_{50} (*Lebistes reticulats*, guppy) = 59.30 mg/L, 96 hours
LC_{50} (*Daphnia magna*, water flea) = 313 mg/L; 48 hours
LC_{50} (*nifocra spinipes*, copepod) = 24.2-74.2 mg/L; 24 hours
LC_{50} (*Artemia saluna*, Brine Shrimp) = 33 mg/L; 24 hours
LC_{50} (*Morone saxatilis*, stripped bass) = 7.3 mg/L; 96 hours
LC_{50} (sheephead minnow) = 277-485 mg/L; 96 hours
LC_{50} (*Aedes aegypti*) 22 mg/L
LC_{50} (*Alandra granaria*, grain weevil) = 210 mg/L

13. DISPOSAL CONSIDERATIONS

PREPARING WASTES FOR DISPOSAL: Waste disposal must be in accordance with appropriate Federal, State, and local regulations. Return cylinders with residual product to Airgas Inc. Do not dispose of locally.

14. TRANSPORTATION INFORMATION

THIS MATERIAL IS HAZARDOUS AS DEFINED BY 49 CFR 172.101 BY THE U.S. DEPARTMENT OF TRANSPORTATION.

PROPER SHIPPING NAME:	Toluene
HAZARD CLASS NUMBER and DESCRIPTION:	3 (Flammable Liquid)
UN IDENTIFICATION NUMBER:	UN 1294
PACKING GROUP:	PG II
DOT LABEL(S) REQUIRED:	Flammable Liquid

NORTH AMERICAN EMERGENCY RESPONSE GUIDEBOOK NUMBER (1996): 130

MARINE POLLUTANT: Toluene is not classified by the DOT as a Marine Pollutant (as defined by 49 CFR 172.101, Appendix B).

TRANSPORT CANADA, TRANSPORTATION OF DANGEROUS GOODS REGULATIONS: THIS MATERIAL IS CONSIDERED AS DANGEROUS GOODS. Use the above information, in addition to the following:

HAZARD CLASS NUMBER, DESCRIPTION:	3 (Flammable Liquid), 9.2 (Hazardous to the Environment)
SPECIAL PROVISION:	109
REGULATED LIMIT:	50 kg

15. REGULATORY INFORMATION

U.S. SARA REPORTING REQUIREMENTS: Toluene is subject to the reporting requirements of Sections 302, 304 and 313 of Title III of the Superfund Amendments and Reauthorization Act, as follows:

CHEMICAL NAME	SARA 302 (40 CFR 355, Appendix A)	SARA 304 (40 CFR Table 302.4)	SARA 313 (40 CFR 372.65)
TOLUENE	NO	YES	YES

U.S. SARA THRESHOLD PLANNING QUANTITY: Not applicable.

U.S. CERCLA REPORTABLE QUANTITY (RQ): 1000 lb.

CANADIAN DSL/NDSL INVENTORY STATUS: Toluene is listed on the DSL Inventory.

U.S. TSCA INVENTORY STATUS: Toluene is listed on the TSCA Inventory.

OTHER U.S. FEDERAL REGULATIONS: Toluene is a toxic pollutant under Section 307(a)(1) of the Clean Water Act and is subject to effluent limitations. Toluene is not listed in Appendix A as a highly hazardous chemical, per 29 CFR 1910.119: Process Safety Management of Highly Hazardous Chemicals. Under this regulation, however, any process that involves a flammable liquid on-site, in one location, in quantities of 10,000 lb. (4,553 kg) or greater is covered under this regulation unless it is used as a fuel.

U.S. STATE REGULATORY INFORMATION: Toluene is covered under specific State regulations, as denoted below:

Alaska - Designated Toxic and Hazardous Substances: Toluene.
California - Permissible Exposure Limits for Chemical Contaminants: Toluene.
Florida - Substance List: Toluene.
Illinois - Toxic Substance List: Toluene.
Kansas - Section 302/313 List: Toluene.
Massachusetts - Substance List: Toluene.
Michigan Critical Materials Register: Toluene.
Minnesota - List of Hazardous Substances: Toluene.
Missouri - Employer Information/Toxic Substance List: Toluene.
New Jersey - Right to Know Hazardous Substance List: Toluene.
North Dakota - List of Hazardous Chemicals, Reportable Quantities: Toluene.
Pennsylvania - Hazardous Substance List: Toluene.
Rhode Island - Hazardous Substance List: Toluene.
Texas - Hazardous Substance List: Toluene.
West Virginia - Hazardous Substance List: Toluene.
Wisconsin - Toxic and Hazardous Substances: Toluene.

CALIFORNIA SAFE DRINKING WATER AND TOXIC ENFORCEMENT ACT (PROPOSITION 65): Toluene is listed on the California Proposition 65 Lists. WARNING: Toluene is known to the State of California to cause birth defects or other reproductive harm.

LABELING: **WARNING!** FLAMMABLE LIQUID AND VAPOR. FLASH POINT = 4.4°C (40°F). HARMFUL IF INHALED. PROLONGED OR REPEATED SKIN CONTACT MAY DRY SKIN AND CAUSE IRRITATION. CAN CAUSE CENTRAL NERVOUS SYSTEM EFFECTS. CAN CAUSE ADVERSE EFFECTS ON THE BLOOD SYSTEM. LIVER, KIDNEYS. MAY CAUSE REPRODUCTIVE EFFECTS, BASED ON ANIMAL TESTS. CAN CAUSE DEATH IF TOO MUCH IS BREATHED. ASPIRATION HAZARD IF SWALLOWED - CAN ENTER LUNGS AND CAUSE DAMAGE. Keep away from heat, sparks and flame. Keep container closed. Use only with adequate ventilation. Avoid contact with skin and clothing. Avoid exposure to vapor. Wash thoroughly after handling. FIRST-AID: In case of contact, immediately flush skin with plenty of water. Remove contaminated clothing and shoes. Get medical attention if irritation develops or persists. If inhaled, remove to fresh air. If not breathing, give artificial respiration. If breathing is difficult, give oxygen. In case of fire, use water fog, foam, dry chemical, or CO_2. In case of spill: Absorb spill with inert materials (e.g. activated carbon, dry sand). Flush residual spill with water. Consult Material Safety Data Sheet for additional information.

CANADIAN WHMIS SYMBOLS:

Class B2: Flammable Liquid
Class D2A/D2B: Material Causing Other Toxic Effects

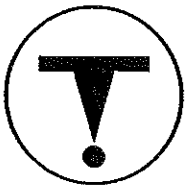

16. OTHER INFORMATION

PREPARED BY: CHEMICAL SAFETY ASSOCIATES, Inc.
9163 Chesapeake Drive, San Diego, CA 92123-1002
619/565-0302

The information contained herein is based on data considered accurate. However, no warranty is expressed or implied regarding the accuracy of these data or the results to be obtained from the use thereof. AIRGAS, Inc. assumes no responsibility for injury to the vendee or third persons proximately caused by the material if reasonable safety procedures are not adhered to as stipulated in the data sheet. Additionally, AIRGAS, Inc. assumes no responsibility for injury to vendee or third persons proximately caused by abnormal use of the material even if reasonable safety procedures are followed. Furthermore, vendee assumes the risk in his use of the material.

DEFINITIONS OF TERMS

A large number of abbreviations and acronyms appear on a MSDS. Some of these which are commonly used include the following:

CAS #: This is the Chemical Abstract Service Number which uniquely identifies each constituent. It is used for computer-related searching.

EXPOSURE LIMITS IN AIR:

ACGIH - American Conference of Governmental Industrial Hygienists, a professional association which establishes exposure limits. **TLV** - Threshold Limit Value - an airborne concentration of a substance which represents conditions under which it is generally believed that nearly all workers may be repeatedly exposed without adverse effect. The duration must be considered, including the 8-hour Time Weighted Average **(TWA)**, the 15-minute Short Term Exposure Limit, and the instantaneous Ceiling Level **(C)**. Skin absorption effects must also be considered.

OSHA - U.S. Occupational Safety and Health Administration. **PEL** - Permissible Exposure Limit - This exposure value means exactly the same as a TLV, except that it is enforceable by OSHA. The OSHA Permissible Exposure Limits are based in the 1989 PELs and the June, 1993 Air Contaminants Rule (Federal Register: 58: 35338-35351 and 58: 40191). Both the current PELs and the vacated PELs are indicated. The phrase, "Vacated 1989 PEL," is placed next to the PEL which was vacated by Court Order.

IDLH - Immediately Dangerous to Life and Health - This level represents a concentration from which one can escape within 30-minutes without suffering escape-preventing or permanent injury. The **DFG - MAK** is the Republic of Germany's Maximum Exposure Level, similar to the U.S. PEL. **NIOSH** is the National Institute of Occupational Safety and Health, which is the research arm of the U.S. Occupational Safety and Health Administration **(OSHA)**. NIOSH issues exposure guidelines called Recommended Exposure Levels **(RELs)**. When no exposure guidelines are established, an entry of **NE** is made for reference.

HAZARD RATINGS:

HAZARDOUS MATERIALS IDENTIFICATION SYSTEM: Health Hazard: **0** (minimal acute or chronic exposure hazard); **1** (slight acute or chronic exposure hazard); **2** (moderate acute or significant chronic exposure hazard); **3** (severe acute exposure hazard; onetime overexposure can result in permanent injury and may be fatal); **4** (extreme acute exposure hazard; onetime overexposure can be fatal). Flammability Hazard: **0** (minimal hazard); **1** (materials that require substantial pre-heating before burning); 2 (combustible liquid or solids; liquids with a flash point of 38-93°C [100-200°F]); **3** (Class IB and IC flammable liquids with flash points below 38°C [100°F]); **4** (Class IA flammable liquids with flash points below 23°C [73°F] and boiling points below 38°C [100°F]. Reactivity Hazard: **0** (normally stable); **1** (material that can become unstable at elevated temperatures or which can react slightly with water); **2** (materials that are unstable but do not detonate or which can react violently with water); **3** (materials that can detonate when initiated or which can react explosively with water); **4** (materials that can detonate at normal temperatures or pressures).

NATIONAL FIRE PROTECTION ASSDCIATION: Health Hazard: **0** (material that on exposure under fire conditions would offer no hazard beyond that of ordinary combustible materials); **1** (materials that on exposure under fire conditions could cause irritation or minor residual injury); 2 (materials that on intense or continued exposure under fire conditions could cause temporary incapacitation or possible residual injury); **3** (materials that can on short exposure could cause serious temporary or residual injury); **4** (materials that under very short exposure causes death or major residual injury).

NATIONAL FIRE PROTECTION ASSOCIATION (Continued): Flammability Hazard and Reactivity Hazard: Refer to definitions for "Hazardous Materials Identification System".

FLAMMABILITY LIMITS IN AIR:

Much of the information related to fire and explosion is derived from the National Fire Protection Association **(NFPA)**. Flash Point - Minimum temperature at which a liquid gives off sufficient vapors to form an ignitable mixture with air. Autoignition Temperature: The minimum temperature required to initiate combustion in air with no other source of ignition. LEL - the lowest percent of vapor in air, by volume, that will explode or ignite in the presence of an ignition source. UEL - the highest percent of vapor in air, by volume, that will explode or ignite in the presence of an ignition source.

TOXICOLOGICAL INFORMATION:

Possible health hazards as derived from human data, animal studies, or from the results of studies with similar compounds are presented. Definitions of some terms used in this section are: **LD_{50}** - Lethal Dose (solids & liquids) which kills 50% of the exposed animals; **LC_{50}** - Lethal Concentration (gases) which kills 50% of the exposed animals; ppm concentration expressed in parts of material per million parts of air or water; **mg/m^3** concentration expressed in weight of substance per volume of air; **mg/kg** quantity of material, by weight, administered to a test subject, based on their body weight in kg. Data from several sources are used to evaluate the cancer-causing potential of the material. The sources are: **IARC** - the International Agency for Research on Cancer; **NTP** - the National Toxicology Program, **RTECS** - the Registry of Toxic Effects of Chemical Substances, **OSHA** and **CAL/OSHA**. IARC and NTP rate chemicals on a scale of decreasing potential to cause human cancer with rankings from 1 to 4. Subrankings (2A, 2B, etc.) are also used. Other measures of toxicity include **TDLo**, the lowest dose to cause a symptom and **TCLo** the lowest concentration to cause a symptom; **TDo, LDLo**, and **LDo**, or **TC, TCo, LCLo**, and **LCo**, the lowest dose (or concentration) to cause lethal or toxic effects. **BEI** - Biological Exposure Indices, represent the levels of determinants which are most likely to be observed in specimens collected from a healthy worker who has been exposed to chemicals to the same extent as a worker with inhalation exposure to the TLV. Ecological Information: EC is the effect concentration in water.

REGULATORY INFORMATION:

This section explains the impact of various laws and regulations on the material. **EPA** is the U.S. Environmental Protection Agency. **WHMIS** is the Canadian Workplace Hazardous Materials Information System. **DOT** and **TC** are the U.S. Department of Transportation and the Transport Canada, respectively. Superfund Amendments and Reauthorization Act **(SARA)**; the Canadian Domestic/Non-Domestic Substances List **(DSL/NDSL)**; the U.S. Toxic Substance Control Act **(TSCA)**; Marine Pollutant status according to the **DOT**; the Comprehensive Environmental Response, Compensation, and Liability Act **(CERCLA** or **Superfund)**; and various state regulations.

MATERIAL SAFETY DATA SHEET (MSDS)

MATERIAL SAFETY DATA SHEET

EM SCIENCE

1. CHEMICAL PRODUCT AND COMPANY IDENTIFICATION

Manufacturer.....:
EM SCIENCE
A Division of EM Industries
P.O. Box 70
480 Democrat Road
Gibbstown, N.J. 08027

Preparation Date.: 11/13/97

Information Phone Number.: 856-423-6300
Hours: Mon. to Fri. 8:30-5
Chemtrec Emergency Number: 800-424-9300
Hours: 24 hrs a day

Catalog Number(s):

TX0170 TX0175 TX0176 TX0177

Product Name:
Tetrachloroethylene
Synonyms:
Perchloroethylene
Chemical Family:
Chlorinated Hydrocarbon
Formula:
$Cl_2C{:}CCl_2$
Molecular Weight.:
165.85

2. COMPOSITION / INFORMATION ON INGREDIENTS

Component	CAS #	Appr %
Tetrachloroethene	127-18-4	100%

3. HAZARDS IDENTIFICATION

EMERGENCY OVERVIEW
VAPOR HARMFUL.
HARMFUL IF INHALED OR SWALLOWED.
POSSIBLE CANCER HAZARD. MAY CAUSE CANCER BASED ON ANIMAL DATA.
IRRITATING TO SKIN, EYES AND MUCOUS MEMBRANES.
MAY CAUSE EYE INJURY.
May Cause Damage To Liver, Kidneys, and Central Nervous System.

WARNING: This product contains a chemical(s) known to the State of California to cause cancer.

Appearance:
Colorless to pale yellow liquid; chloroform odor

POTENTIAL HEALTH EFFECTS (ACUTE AND CHRONIC)

Symptoms of Exposure:
Vapor harmful and possibly fatal on inhalation. Irritating on contact with skin, eyes or mucous membranes. May cause injury to eyes. Harmful if swallowed. Possible nausea, skin flush, muscle weakness, dizziness, headache, liver, kidney, central nervous system damage.

Medical Cond. Aggravated by Exposure:
Liver, kidney, cardiovascular, or
nervous disorders

Routes of Entry:
Inhalation, ingestion

Carcinogenicity:
Proven animal carcinogenic substance. Possible Cancer Hazard.
WARNING: This product contains a chemical(s) known to the State of California to cause cancer.

4. FIRST AID MEASURES

Emergency First Aid:
GET MEDICAL ASSISTANCE FOR ALL CASES OF OVEREXPOSURE.
Skin: Immediately flush thoroughly with large amounts of water.
Eyes: Immediately flush thoroughly with water for at least 15 minutes.
Inhalation: Remove to fresh air; give artificial respiration if breathing has stopped.
Ingestion: If conscious, drink water and induce vomiting immediately as directed by medical personnel. Never give anything by mouth to an unconscious person.
Remove contaminated clothing and wash before reuse.
Advise doctor NOT to administer epinephrine.

5. FIRE FIGHTING MEASURES

Flash Point (F): Noncombustible
Flammable Limits LEL (%): N/A
Flammable Limits UEL (%): N/A
Extinguishing Media:
Use any suitable for adjacent material.

Fire Fighting Procedures:
Wear self-contained breathing apparatus and protective clothing.

Fire & Explosion Hazards:
Thermal decomposition produces highly toxic fumes.

6. ACCIDENTAL RELEASE MEASURES

Spill Response:
Evacuate the area of all unnecessary personnel. Wear suitable protective equipment listed under Exposure / Personal Protection. Eliminate any ignition sources until the area is determined to be free from explosion or fire hazards. Contain the release and eliminate its source, if this can be done without risk. Take up and containerize for proper disposal as described under Disposal. Comply with Federal, State, and local regulations on reporting releases. Refer to Regulatory Information for reportable quantity and other regulatory data.

7. HANDLING AND STORAGE

Handling & Storage:
Keep container closed. Store in a cool, dry, well-ventilated area away from ignition sources. Do not breath vapor or mist. Do not get in eyes, on skin, or on clothing. Retained residue may make empty containers hazardous; use caution!

8. EXPOSURE CONTROLS / PERSONAL PROTECTION

ENGINEERING CONTROLS AND PERSONAL PROTECTIVE EQUIPMENT:
Ventilation, Respiratory Protection, Protective Clothing, Eye Protection:
Respiratory Protection: If workplace exposure limit(s) of product or any component is exceeded (see TLV/PEL), a NIOSH/MSHA approved air supplied respirator is advised in absence of proper environmental control. OSHA regulations also permit other NIOSH/MSHA respirators (negative pressure type) under specified conditions (see your safety equipment supplier). Engineering and/or administrative controls should be implemented to reduce exposure. Material must be handled or transferred in an approved fume hood or with equivalent ventilation. Protective gloves (Viton, PVA or equivalent) must be worn to prevent skin contact; protective clothing (Impervious) should be worn when handling this material. Safety glasses with side shields must be worn at all times.

Work/Hygenic Practices:
Wash thoroughly after handling. Do not take internally. Eye wash and safety equipment should be readily available.

EXPOSURE GUIDELINES

OSHA - PEL:

	TWA		STEL		CL		
Component	PPM	MG/M3	PPM	MG/M3	PPM	MG/M3	Skin
Tetrachloroethene	25	170					

ACGIH - TLV:

	TWA		STEL		CL		
Component	PPM	MG/M3	PPM	MG/M3	PPM	MG/M3	Skin
Tetrachloroethene	25	170	100	685			

If there are no exposure limit numbers listed in the Exposure Guidelines chart, this indicates that no OSHA or ACGIH exposure limts have been established.

9. PHYSICAL AND CHEMCIAL PROPERTIES

Boiling Point (C 760 mmHg) : 121C
Melting Point (C) : -19C
Specific Gravity (H_20 = 1) : 1.6
Vapor Pressure (mm Hg) : 13 20C
Percent Volatile by vol (%): 100%
Vapor Density (Air = 1) : 5.76
Evaporation Rate (BuAc = 1): 2.8
Solubility in Water (%) : 0.015%
Appearance :
Colorless to pale yellow liquid; chloroform odor

10. STABILITY AND REACTIVITY

Stability: Yes

Hazardous Polymerization:
Does not occur

Hazardous Decomposition:
Highly toxic fumes including phosgene, HCl, CO_x

Conditions to Avoid:
Contact with ignition source or hot surface.

Materials To Avoid:

```
( ) Water
( ) Acids
( ) Bases
( ) Corrosives
(X) Oxidizers
(X) Other: Active metals (Ba, Li, Be),
N2O4, NaOH, Nitric acid
```

11. TOXICOLOGICAL INFORMATION

Toxicity Data

```
orl-rat LD50: 2629 mg/kg   ihl-hmn TCLo:  96 ppm/7H
```

Toxicological Findings:

Tests on laboratory animals indicate material may cause tumors
and produce adverse mutagenic and reproductive effects.
Cited in Registry of Toxic Effects of Chemical Substances (RTECS)

12. DISPOSAL CONSIDERATIONS

EPA Waste Numbers: U210 D039

Treatment:
Specified Technology - Incineration or fuels blending to less than the TCLP standard. Contact your local permitted waste disposal site (TSD) for permissible treatment sites.
ALWAYS CONTACT A PERMITTED WASTE DISPOSER (TSD) TO ASSURE COMPLIANCE WITH ALL CURRENT LOCAL, STATE AND FEDERAL REGULATIONS.

13. TRANSPORT INFORMATION

DOT Proper Shipping Name:
Tetrachloroethylene

DOT ID Number :
UN1897

14. REGULATORY INFORMATION

TSCA Statement:
The CAS number of this product is listed on the TSCA Inventory.

Component	SARA EHS (302)	SARA EHS TPQ (lbs)	CERCLA RQ (lbs)
Tetrachloroethene			100

Component	OSHA Floor List	SARA 313	DeMinimis for SARA 313 (%)
Tetrachloroethene	Y	Y	0.1

If there is no information listed on the regulatory information chart, this indicates that the chemical is not covered by the specific regulation listed.

15. OTHER INFORMATION

Comments:
None

NFPA Hazard Ratings:

```
Health          : 2
Flammability    : 0
Reactivity      : 0
Special Hazards :
```

Revision History: 3/1/82 1/1/84 6/3/87 7/30/87 10/27/87 11/20/89 3/1/91 3/6/95 10/28/96

| = Revised Section

N/A = Not Available

N/E = None Establised

The statements contained herein are offered for informational purposes only and are based upon technical data that EM Science believes to be accurate. It is intended for use only by persons having the necessary technical skill and at their own discretion and risk. Since conditions and manner of use are outside our control, we make NO WARRANTY, EXPRESS OR IMPLIED, OR MERCHANTABILITY, FITNESS OR OTHERWISE.

ACROS ORGANICS

HELP CATALOGS SEARCH ORDER LIST CONTENTS

MATERIAL SAFETY DATA SHEET

1,2,4-Trimethylbenzene, 98%
73581

**** SECTION 1 - CHEMICAL PRODUCT AND COMPANY IDENTIFICATION ****

MSDS Name: 1,2,4-Trimethylbenzene, 98%

Pseudocumene, Pseudocumol, 1,2,4-TMB
Company Identification: Acros Organics N.V.
One Reagent Lane
Fairlawn, NJ 07410
For information in North America, call: 800-ACROS-01
For emergencies in the US, call CHEMTREC: 800-424-9300

**** SECTION 2 - COMPOSITION, INFORMATION ON INGREDIENTS ****

CAS#	Chemical Name	%	EINECS#
95-63-6	1,2,4-TRIMETHYLBENZENE	98%	202-436-9

Hazard Symbols: XN XI
Risk Phrases: 10 36/37/38 20

**** SECTION 3 - HAZARDS IDENTIFICATION ****

EMERGENCY OVERVIEW
Appearance: clear, colorless. Flash Point: 48 deg C.
Warning! Flammable liquid. May cause central nervous system depression. Aspiration hazard. May be absorbed through the skin. Causes eye and skin irritation. Causes digestive and respiratory tract irritation.
Target Organs: Central nervous system, lungs.

Potential Health Effects

Eye:
Causes eye irritation. Causes redness and pain.

Skin:
Causes skin irritation. May be absorbed through the skin. Causes redness and pain.

Ingestion:
May cause gastrointestinal irritation with nausea, vomiting and diarrhea. Aspiration of material into the lungs may cause chemical pneumonitis, which may be fatal. May cause central nervous system depression.

Inhalation:

Causes respiratory tract irritation. May cause drowsiness, unconsciousness, and central nervous system depression.

Chronic:

Prolonged or repeated skin contact may cause dermatitis. Repeated inhalation may cause chronic bronchitis. May cause anemia and other blood cell abnormalities. Prolonged exposure may produce a narcotic effect. Prolonged or repeated exposure may cause nausea, dizziness, and headache.

**** SECTION 4 - FIRST AID MEASURES ****

Eyes:

Flush eyes with plenty of water for at least 15 minutes, occasionally lifting the upper and lower lids. Get medical aid immediately.

Skin:

Get medical aid immediately. Flush skin with plenty of soap and water for at least 15 minutes while removing contaminated clothing and shoes.

Ingestion:

If victim is conscious and alert, give 2-4 cupfuls of milk or water. Never give anything by mouth to an unconscious person. Possible aspiration hazard. Do NOT induce vomiting and seek IMMEDIATE MEDICAL ADVICE.

Inhalation:

Get medical aid immediately. Remove from exposure to fresh air immediately. If not breathing, give artificial respiration. If breathing is difficult, give oxygen.

Notes to Physician:

Treat symptomatically and supportively.

**** SECTION 5 - FIRE FIGHTING MEASURES ****

General Information:

As in any fire, wear a self-contained breathing apparatus in pressure-demand, MSHA/NIOSH (approved or equivalent), and full protective gear. Will burn if involved in a fire. Flammable Liquid. Vapors may be heavier than air. They can spread along the ground and collect in low or confined areas.

Extinguishing Media:

Use water spray to cool fire-exposed containers. In case of fire, use water fog, dry chemical, carbon dioxide, or regular foam.

Autoignition Temperature: 500 deg C (932.00 deg F)
Flash Point: 48 deg C (118.40 deg F)
NFPA Rating: health-0; flammability-2; reactivity-0
Explosion Limits, Lower: .90 vol %
Upper: 6.40 vol %

**** SECTION 6 - ACCIDENTAL RELEASE MEASURES ****

General Information: Use proper personal protective equipment as indicated in Section 8.

Spills/Leaks:

Absorb spill with inert material, (e.g., dry sand or earth), then place into a chemical waste container. Remove all sources of ignition. Use a spark-proof tool. Provide ventilation.

**** SECTION 7 - HANDLING and STORAGE ****

Handling:

Wash thoroughly after handling. Use only in a well ventilated area. Use spark-proof tools and explosion proof equipment. Avoid contact with skin and eyes. Empty containers retain product residue, (liquid

and/or vapor), and can be dangerous. Take precautionary measures against static discharges. Do not ingest or inhale.

Storage:

Keep away from sources of ignition. Store in a cool, dry place. Store in a tightly closed container. Flammables-area.

**** SECTION 8 - EXPOSURE CONTROLS, PERSONAL PROTECTION ****

Engineering Controls:

Use adequate ventilation to keep airborne concentrations low.

Exposure Limits

Chemical Name	ACGIH	NIOSH	OSHA - Final PELs
1,2,4-TRIMETHYLBENZENE	none listed	25 ppm TWA; 125 mg/m3 TWA	none listed

OSHA Vacated PELs:

1,2,4-TRIMETHYLBENZENE:

No OSHA Vacated PELs are listed for this chemical.

Personal Protective Equipment

Eyes:

Wear appropriate protective eyeglasses or chemical safety goggles as described by OSHA's eye and face protection regulations in 29 CFR 1910.133 or European Standard EN166.

Skin:

Wear appropriate protective gloves to prevent skin exposure.

Clothing:

Wear appropriate protective clothing to prevent skin exposure.

Respirators:

Follow the OSHA respirator regulations found in 29CFR 1910.134 or European Standard EN 149. Always use a NIOSH or European Standard EN 149 approved respirator when necessary.

**** SECTION 9 - PHYSICAL AND CHEMICAL PROPERTIES ****

Physical State:	Liquid
Appearance:	clear, colorless
Odor:	Aromatic
pH:	Not available.
Vapor Pressure:	2.1 mbar @ 20 deg C
Vapor Density:	4.15 (air=1)
Evaporation Rate:	Not available.
Viscosity:	Not available.
Boiling Point:	168 deg C @ 760.00mm Hg
Freezing/Melting Point:	-44 deg C
Decomposition Temperature:	Not available.
Solubility:	6 MG/100ML (20°C)
Specific Gravity/Density:	.8890g/cm3
Molecular Formula:	C9H12
Molecular Weight:	120.19

**** SECTION 10 - STABILITY AND REACTIVITY ****

Chemical Stability:

Stable under normal temperatures and pressures.
Conditions to Avoid:
Incompatible materials, ignition sources.
Incompatibilities with Other Materials:
Strong oxidizing agents.
Hazardous Decomposition Products:
Carbon monoxide, carbon dioxide.
Hazardous Polymerization: Has not been reported.

**** SECTION 11 - TOXICOLOGICAL INFORMATION ****

RTECS#:
CAS# 95-63-6: DC3325000
LD50/LC50:
CAS# 95-63-6: Inhalation, rat: LC50 =18 gm/m3/4H; Oral, rat: LD50 = 5 gm/kg.
Carcinogenicity:
1,2,4-TRIMETHYLBENZENE -
Not listed by ACGIH, IARC, NIOSH, NTP, or OSHA.
Epidemiology:
No data available.
Teratogenicity:
No data available.
Reproductive Effects:
No data available.
Neurotoxicity:
No data available.
Mutagenicity:
EPA:
Other Studies:
No data available.

**** SECTION 12 - ECOLOGICAL INFORMATION ****

Ecotoxicity:
Invertebrate toxicity:
spp. 0.1 mol/m³/24H
effects" for complete information (editor : M.L. Richardson)
Environmental Fate:
See "The dictionary of substances and their effects" for complete information (editor : M.L.Richardson)
Physical/Chemical:
Not available.
Other:
Not available.

**** SECTION 13 - DISPOSAL CONSIDERATIONS ****

Dispose of in a manner consistent with federal, state, and local regulations.
RCRA D-Series Maximum Concentration of Contaminants:
None listed.
RCRA D-Series Chronic Toxicity Reference Levels: None listed.
RCRA F-Series: None listed.
RCRA P-Series: None listed.
RCRA U-Series: None listed.
Not listed as a material banned from land disposal according to RCRA.

**** SECTION 14 - TRANSPORT INFORMATION ****

US DOT
Shipping Name: FLAMMABLE LIQUIDS, N.O.S.

(1,2,4-TRIMETHYLBENZENE)
Hazard Class: 3
UN Number: UN1993
Packing Group: III

IMO
Shipping Name: FLAMMABLE LIQUID, N.O.S.
Hazard Class: 3.3
UN Number: 1993
Packing Group: III

IATA
Shipping Name: FLAMMABLE LIQUID, N.O.S.*
Hazard Class: 3
UN Number: 1993
Packing Group: III

RID/ADR
Shipping Name: FLAMMABLE LIQUID, N.O.S.
Dangerous Goods Code: 3(31C)
UN Number: 1993

Canadian TDG
Shipping Name: COMBUSTIBLE LIQUID NOS (TRIMETHYLBENZENE)
Hazard Class: 3
UN Number: UN1993
Other Information: FP 48 C

**** SECTION 15 - REGULATORY INFORMATION ****

US FEDERAL

TSCA
CAS# 95-63-6 is listed on the TSCA inventory.

Health & Safety Reporting List
CAS# 95-63-6: Effective Date: April 29, 1983; Sunset Date: April 29, 1993

Chemical Test Rules
None of the chemicals in this product are under a Chemical Test Rule.

Section 12b
None of the chemicals are listed under TSCA Section 12b.

TSCA Significant New Use Rule
None of the chemicals in this material have a SNUR under TSCA.

SARA

Section 302 (RQ)
None of the chemicals in this material have an RQ.

Section 302 (TPQ)
None of the chemicals in this product have a TPQ.

SARA Codes
CAS # 95-63-6: acute, chronic, flammable.

Section 313
This material contains 1,2,4-TRIMETHYLBENZENE (CAS# 95-63-6, 98%),which is subject to the reporting requirements of Section 313 of SARA Title III and 40 CFR Part 373.

Clean Air Act:
This material does not contain any hazardous air pollutants.
This material does not contain any Class 1 Ozone depletors.
This material does not contain any Class 2 Ozone depletors.

Clean Water Act:
None of the chemicals in this product are listed as Hazardous Substances under the CWA.
None of the chemicals in this product are listed as Priority Pollutants under the CWA.
None of the chemicals in this product are listed as Toxic Pollutants under the CWA.

OSHA:
None of the chemicals in this product are considered highly hazardous by OSHA.

STATE

1,2,4-TRIMETHYLBENZENE can be found on the following state right to know lists: New Jersey, Pennsylvania, Massachusetts.
California No Significant Risk Level:
None of the chemicals in this product are listed.

European/International Regulations

European Labeling in Accordance with EC Directives

Hazard Symbols: XN XI

Risk Phrases:

R 10 Flammable.
R 36/37/38 Irritating to eyes, respiratory system and skin.
R 20 Harmful by inhalation.

Safety Phrases:

S 26 In case of contact with eyes, rinse immediately with plenty of water and seek medical advice.

WGK (Water Danger/Protection)

CAS# 95-63-6: 3

Canada

CAS# 95-63-6 is listed on Canada's DSL/NDSL List.
This product does not have a WHMIS classification.
CAS# 95-63-6 is not listed on Canada's Ingredient Disclosure List.

Exposure Limits

**** SECTION 16 - ADDITIONAL INFORMATION ****

MSDS Creation Date: 3/01/1994 Revision #2 Date: 9/02/1997

The information above is believed to be accurate and represents the best information currently available to us. However, we make no warranty of merchantability or any other warranty, express or implied, with respect to such information, and we assume no liability resulting from its use. Users should make their own investigations to determine the suitability of the information for their particular purposes. In no way shall Fisher be liable for any claims, losses, or damages of any third party or for lost profits or any special, indirect, incidental, consequential or exemplary damages, howsoever arising, even if Fisher has been advised of the possibility of such damages.

Back to product information.

MATERIAL SAFETY DATA SHEET (MSDS)

MATERIAL SAFETY DATA SHEET

EM SCIENCE

1. CHEMICAL PRODUCT AND COMPANY IDENTIFICATION

Manufacturer.....:
EM SCIENCE
A Division of EM Industries
P.O. Box 70
480 Democrat Road
Gibbstown, N.J. 08027

Preparation Date.: 3/5/99

Information Phone Number.: 856-423-6300
Hours: Mon. to Fri. 8:30-5
Chemtrec Emergency Number: 800-424-9300
Hours: 24 hrs a day

Catalog Number(s):

0086808D 64754 XX0055 XX0055E XX0055P XX0055S XX0057
XX0060 XX0061

Product Name:
Xylene
Synonyms:
Xylol, Dimethylbenzene
Chemical Family:
Aromatic Hydrocarbon
Formula:
$C_6H_4(CH_3)_2$
Molecular Weight.:
106.17

2. COMPOSITION / INFORMATION ON INGREDIENTS

Component	CAS #	Appr %
m-Xylene	108-38-3	42%
o-Xylene	95-47-6	19%
p-Xylene	106-42-3	18%
Ethylbenzene	100-41-4	21%

Xylene has been assigned CAS# 1330-20-7.

Approx. % as wt/vol

3. HAZARDS IDENTIFICATION

EMERGENCY OVERVIEW
HARMFUL OR FATAL IF SWALLOWED.
FLAMMABLE LIQUID AND VAPOR.
VAPOR HARMFUL.
May Cause Damage To Lungs, Thorax, Or Sense Organs.
IRRITATING TO SKIN, EYES AND MUCOUS MEMBRANES.

Appearance:
Colorless liquid; aromatic odor

POTENTIAL HEALTH EFFECTS (ACUTE AND CHRONIC)

Symptoms of Exposure:
Harmful or fatal if swallowed. Vapor harmful. Causes tearing, blurred vision, dizziness, fatigue, loss of appetite, nausea, irritation of mucous membranes. Narcotic at high concentrations. Irritating to skin on prolonged contact causing flaky dermatitis and defatting. Liquid and vapor irritating to eyes.

Medical Cond. Aggravated by Exposure:
Data not available.

Routes of Entry:
Inhalation, ingestion

Carcinogenicity:
The material is not listed (IARC, NTP, OSHA) as cancer causing agent.

4. FIRST AID MEASURES

Emergency First Aid:
GET MEDICAL ASSISTANCE FOR ALL CASES OF OVEREXPOSURE.
Skin: Wash thoroughly with soap and water.
Eyes: Immediately flush thoroughly with water for at least 15 minutes.
Inhalation: Remove to fresh air; give artificial respiration if breathing has stopped.
Ingestion: Call a physician immediately. ONLY induce vomiting at the instructions of a physician. Never give anything by mouth to an unconscious person.
Remove contaminated clothing and wash before reuse.

5. FIRE FIGHTING MEASURES

Flash Point (F): 85F (cc)
Flammable Limits LEL (%): 1.00
Flammable Limits UEL (%): 7.00
Extinguishing Media:
Use "alcohol" foam, carbon dioxide, dry chemical.
Water spray to cool fire-exposed containers.

Fire Fighting Procedures:
Wear self-contained breathing apparatus.

Fire & Explosion Hazards:
Vapor can travel distances to ignition source and flash back.

6. ACCIDENTAL RELEASE MEASURES

Spill Response:
Evacuate the area of all unnecessary personnel. Wear suitable protective equipment listed under Exposure / Personal Protection. Eliminate any ignition sources until the area is determined to be free from explosion or fire hazards. Contain the release and eliminate its source, if this can be done without risk. Take up and containerize for proper disposal as described under Disposal. Comply with Federal, State, and local regulations on reporting releases. Refer to Regulatory Information for reportable quantity and other regulatory data.
EM SCIENCE recommends Spill-X absorbent agents for various types of spills. Additional information on the Spill-X products can be provided through the EM SCIENCE Technical Service Department (609) 423-6300. The following EM SCIENCE Spill-X absorbent is recommended for this product:

SX0863 Solvent Spill Treatment Kit

7. HANDLING AND STORAGE

Handling & Storage:
Keep container tightly closed. Store in a cool, dry, well-ventilated area away from ignition sources. Do not breathe vapor. Do not get in eyes, on skin, or on clothing. Never use welding or cutting torch on or near drum (even empty) because product (or residue) may ignite explosively. Electrically ground all equipment when handling this product. Retained residue may make empty containers hazardous; use caution!

8. EXPOSURE CONTROLS / PERSONAL PROTECTION

ENGINEERING CONTROLS AND PERSONAL PROTECTIVE EQUIPMENT:
Ventilation, Respiratory Protection, Protective Clothing, Eye Protection:
Respiratory Protection: If workplace exposure limit(s) of product or any component is exceeded (see TLV/PEL), a NIOSH/MSHA approved air supplied respirator is advised in absence of proper environmental control. OSHA regulations also permit other NIOSH/MSHA respirators (negative pressure type) under specified conditions (see your safety equipment supplier). Engineering and/or administrative controls should be implemented to reduce exposure. Material must be handled or transferred in an approved fume hood or with equivalent ventilation. Protective gloves must be worn to prevent skin contact (Viton, PVA or equivalent) Safety glasses with side shields must be worn at all times.

Work/Hygenic Practices:
Wash thoroughly after handling. Do not take internally. Eye wash and safety equipment should be readily available.

EXPOSURE GUIDELINES

OSHA - PEL:

	TWA		STEL		CL		
Component	PPM	MG/M3	PPM	MG/M3	PPM	MG/M3	Skin

m-Xylene				
	100	435	150	655
o-Xylene				
	100	435	150	655
p-Xylene				
	100	435	150	655
Ethylbenzene				
	100	435	125	545

ACGIH - TLV:

	TWA		STEL		CL		
Component	PPM	MG/M3	PPM	MG/M3	PPM	MG/M3	Skin
m-Xylene							
	100	434	150	651			
o-Xylene							
	100	434	150	651			
p-Xylene							
	100	434	150	651			
Ethylbenzene							
	100	434	125	543			

If there are no exposure limit numbers listed in the Exposure Guidelines chart, this indicates that no OSHA or ACGIH exposure limts have been established.

9. PHYSICAL AND CHEMCIAL PROPERTIES

Boiling Point (C 760 mmHg) : 138C
Melting Point (C) : N/A
Specific Gravity (H_20 = 1) : 0.872
Vapor Pressure (mm Hg) : 5.1 20C
Percent Volatile by vol (%): 99+%
Vapor Density (Air = 1) : 3.6
Evaporation Rate (BuAc = 1): 0.61
Solubility in Water (%) : 0.02%
Appearance :
Colorless liquid; aromatic odor

10. STABILITY AND REACTIVITY

Stability: Yes

Hazardous Polymerization:
Does not occur

Hazardous Decomposition:
CO_x and various hydrocarbons

Conditions to Avoid:
Heat; contact with ignition sources.

Materials To Avoid:

```
( ) Water
( ) Acids
( ) Bases
( ) Corrosives
(X) Oxidizers
( ) Other:
```

11. TOXICOLOGICAL INFORMATION

Toxicity Data

orl-rat LD50: 4300 mg/kg ihl-hmn TCLo: 200 ppm

Toxicological Findings:
Tests on laboratory animals indicate material may produce adverse mutagenic effects.
Cited in Registry of Toxic Effects of Chemical Substances (RTECS)

12. DISPOSAL CONSIDERATIONS

EPA Waste Numbers: D001 U239

Treatment:
Incineration, fuels blending or recycle. Contact your local permitted waste disposal site (TSD) for permissible treatment sites. ALWAYS CONTACT A PERMITTED WASTE DISPOSER (TSD) TO ASSURE COMPLIANCE WITH ALL CURRENT LOCAL, STATE AND FEDERAL REGULATIONS.

13. TRANSPORT INFORMATION

DOT Proper Shipping Name:
Xylenes

DOT ID Number :
UN1307

14. REGULATORY INFORMATION

TSCA Statement:
This product is a "Mixture". The CAS numbers of all components are listed on the TSCA Inventory.

Component	SARA EHS (302)	SARA EHS TPQ (lbs)	CERCLA RQ (lbs)

m-Xylene	1000
o-Xylene	1000
p-Xylene	100
Ethylbenzene	1000

Component	OSHA Floor List	SARA 313	DeMinimis for SARA 313 (%)
m-Xylene	Y	Y	1.0
o-Xylene	Y	Y	1.0
p-Xylene	Y	Y	1.0
Ethylbenzene	Y	Y	1.0

If there is no information listed on the regulatory information chart, this indicates that the chemical is not covered by the specific regulation listed.

15. OTHER INFORMATION

Comments:
None

NFPA Hazard Ratings:

```
Health          : 2
Flammability    : 3
Reactivity      : 0
Special Hazards :
```

Revision History: 3/1/78 3/7/86 12/8/86 6/9/87 10/27/87 8/25/88 3/1/91 7/15/91 9/8/95 10/10/95 6/6/97 8/30/97

| = Revised Section

N/A = Not Available

N/E = None Establised

The statements contained herein are offered for informational purposes only and are based upon technical data that EM Science believes to be accurate. It is intended for use only by persons having the necessary technical skill and at their own discretion and risk. Since conditions and manner of use are outside our control, we make NO WARRANTY, EXPRESS O..

IMPLIED, OR MERCHANTABILITY, FITNESS OR OTHERWISE.

MATERIAL SAFETY DATA SHEET (MSDS)

MATERIAL SAFETY DATA SHEET

EM SCIENCE

1. CHEMICAL PRODUCT AND COMPANY IDENTIFICATION

Manufacturer.....:
EM SCIENCE
A Division of EM Industries
P.O. Box 70
480 Democrat Road
Gibbstown, N.J. 08027

Preparation Date.: 3/5/99

Information Phone Number.: 856-423-6300
Hours: Mon. to Fri. 8:30-5
Chemtrec Emergency Number: 800-424-9300
Hours: 24 hrs a day

Catalog Number(s):

0086808D 64754 XX0055 XX0055E XX0055P XX0055S XX0057
XX0060 XX0061

Product Name:
Xylene
Synonyms:
Xylol, Dimethylbenzene
Chemical Family:
Aromatic Hydrocarbon
Formula:
$C_6H_4(CH_3)_2$
Molecular Weight.:
106.17

2. COMPOSITION / INFORMATION ON INGREDIENTS

Component	CAS #	Appr %
m-Xylene	108-38-3	42%
o-Xylene	95-47-6	19%
p-Xylene	106-42-3	18%
Ethylbenzene	100-41-4	21%

Xylene has been assigned CAS# 1330-20-7.

Approx. % as wt/vol

3. HAZARDS IDENTIFICATION

EMERGENCY OVERVIEW
HARMFUL OR FATAL IF SWALLOWED.
FLAMMABLE LIQUID AND VAPOR.
VAPOR HARMFUL.
May Cause Damage To Lungs, Thorax, Or Sense Organs.
IRRITATING TO SKIN, EYES AND MUCOUS MEMBRANES.

Appearance:
Colorless liquid; aromatic odor

POTENTIAL HEALTH EFFECTS (ACUTE AND CHRONIC)

Symptoms of Exposure:
Harmful or fatal if swallowed. Vapor harmful. Causes tearing, blurred vision, dizziness, fatigue, loss of appetite, nausea, irritation of mucous membranes. Narcotic at high concentrations. Irritating to skin on prolonged contact causing flaky dermatitis and defatting. Liquid and vapor irritating to eyes.

Medical Cond. Aggravated by Exposure:
Data not available.

Routes of Entry:
Inhalation, ingestion

Carcinogenicity:
The material is not listed (IARC, NTP, OSHA) as cancer causing agent.

4. FIRST AID MEASURES

Emergency First Aid:
GET MEDICAL ASSISTANCE FOR ALL CASES OF OVEREXPOSURE.
Skin: Wash thoroughly with soap and water.
Eyes: Immediately flush thoroughly with water for at least 15 minutes.
Inhalation: Remove to fresh air; give artificial respiration if breathing has stopped.
Ingestion: Call a physician immediately. ONLY induce vomiting at the instructions of a physician. Never give anything by mouth to an unconscious person.
Remove contaminated clothing and wash before reuse.

5. FIRE FIGHTING MEASURES

Flash Point (F): 85F (cc)
Flammable Limits LEL (%): 1.00
Flammable Limits UEL (%): 7.00
Extinguishing Media:
Use "alcohol" foam, carbon dioxide, dry chemical.
Water spray to cool fire-exposed containers.

Fire Fighting Procedures:
Wear self-contained breathing apparatus.

Fire & Explosion Hazards:
Vapor can travel distances to ignition source and flash back.

6. ACCIDENTAL RELEASE MEASURES

Spill Response:
Evacuate the area of all unnecessary personnel. Wear suitable protective equipment listed under Exposure / Personal Protection. Eliminate any ignition sources until the area is determined to be free from explosion or fire hazards. Contain the release and eliminate its source, if this can be done without risk. Take up and containerize for proper disposal as described under Disposal. Comply with Federal, State, and local regulations on reporting releases. Refer to Regulatory Information for reportable quantity and other regulatory data.
EM SCIENCE recommends Spill-X absorbent agents for various types of spills. Additional information on the Spill-X products can be provided through the EM SCIENCE Technical Service Department (609) 423-6300. The following EM SCIENCE Spill-X absorbent is recommended for this product:

SX0863 Solvent Spill Treatment Kit

7. HANDLING AND STORAGE

Handling & Storage:
Keep container tightly closed. Store in a cool, dry, well-ventilated area away from ignition sources. Do not breathe vapor. L not get in eyes, on skin, or on clothing. Never use welding or cutting torch on or near drum (even empty) because product (or residue) may ignite explosively. Electrically ground all equipment when handling this product. Retained residue may make empty containers hazardous; use caution!

8. EXPOSURE CONTROLS / PERSONAL PROTECTION

ENGINEERING CONTROLS AND PERSONAL PROTECTIVE EQUIPMENT:
Ventilation, Respiratory Protection, Protective Clothing, Eye Protection:
Respiratory Protection: If workplace exposure limit(s) of product or any component is exceeded (see TLV/PEL), a NIOSH/MSHA approved air supplied respirator is advised in absence of proper environmental control. OSHA regulations also permit other NIOSH/MSHA respirators (negative pressure type) under specified conditions (see your safety equipment supplier). Engineering and/or administrative controls should be implemented to reduce exposure. Material must be handled or transferred in an approved fume hood or with equivalent ventilation. Protective gloves must be worn to prevent skin contact (Viton, PVA or equivalent) Safety glasses with side shields must be worn at all times.

Work/Hygenic Practices:
Wash thoroughly after handling. Do not take internally. Eye wash and safety equipment should be readily available.

EXPOSURE GUIDELINES

OSHA - PEL:

	TWA		STEL		CL		
Component	PPM	MG/M3	PPM	MG/M3	PPM	MG/M3	Skin

m-Xylene	100	435	150	655
o-Xylene	100	435	150	655
p-Xylene	100	435	150	655
Ethylbenzene	100	435	125	545

ACGIH - TLV:

	TWA		STEL		CL		
Component	PPM	MG/M3	PPM	MG/M3	PPM	MG/M3	Skin
m-Xylene	100	434	150	651			
o-Xylene	100	434	150	651			
p-Xylene	100	434	150	651			
Ethylbenzene	100	434	125	543			

If there are no exposure limit numbers listed in the Exposure Guidelines chart, this indicates that no OSHA or ACGIH exposure limts have been established.

9. PHYSICAL AND CHEMCIAL PROPERTIES

Boiling Point (C 760 mmHg) : 138C
Melting Point (C) : N/A
Specific Gravity (H_2O = 1) : 0.872
Vapor Pressure (mm Hg) : 5.1 20C
Percent Volatile by vol (%): 99+%
Vapor Density (Air = 1) : 3.6
Evaporation Rate (BuAc = 1): 0.61
Solubility in Water (%) : 0.02%
Appearance :
Colorless liquid; aromatic odor

10. STABILITY AND REACTIVITY

Stability: Yes

Hazardous Polymerization:
Does not occur

Hazardous Decomposition:
CO_x and various hydrocarbons

Conditions to Avoid:
Heat; contact with ignition sources.

Materials To Avoid:

```
( ) Water
( ) Acids
( ) Bases
( ) Corrosives
(X) Oxidizers
( ) Other:
```

11. TOXICOLOGICAL INFORMATION

Toxicity Data

orl-rat LD50: 4300 mg/kg ihl-hmn TCLo: 200 ppm

Toxicological Findings:
Tests on laboratory animals indicate material may produce adverse mutagenic effects.
Cited in Registry of Toxic Effects of Chemical Substances (RTECS)

12. DISPOSAL CONSIDERATIONS

EPA Waste Numbers: D001 U239

Treatment:
Incineration, fuels blending or recycle. Contact your local permitted waste disposal site (TSD) for permissible treatment sites. ALWAYS CONTACT A PERMITTED WASTE DISPOSER (TSD) TO ASSURE COMPLIANCE WITH ALL CURRENT LOCAL, STATE AND FEDERAL REGULATIONS.

13. TRANSPORT INFORMATION

DOT Proper Shipping Name:
Xylenes

DOT ID Number :
UN1307

14. REGULATORY INFORMATION

TSCA Statement:
This product is a "Mixture". The CAS numbers of all components are listed on the TSCA Inventory.

Component	SARA EHS (302)	SARA EHS TPQ (lbs)	CERCLA RQ (lbs)

m-Xylene	1000
o-Xylene	1000
p-Xylene	100
Ethylbenzene	1000

Component	OSHA Floor List	SARA 313	DeMinimis for SARA 313 (%)
m-Xylene	Y	Y	1.0
o-Xylene	Y	Y	1.0
p-Xylene	Y	Y	1.0
Ethylbenzene	Y	Y	1.0

If there is no information listed on the regulatory information chart, this indicates that the chemical is not covered by the specific regulation listed.

15. OTHER INFORMATION

Comments:
None

NFPA Hazard Ratings:

Health : 2
Flammability : 3
Reactivity : 0
Special Hazards :

Revision History: 3/1/78 3/7/86 12/8/86 6/9/87 10/27/87 8/25/88 3/1/91 7/15/91 9/8/95 10/10/95 6/6/97 8/30/97

| = Revised Section

N/A = Not Available

N/E = None Establised

The statements contained herein are offered for informational purposes only and are based upon technical data that EM Science believes to be accurate. It is intended for use only by persons having the necessary technical skill and at their own discretion and risk. Since conditions and manner of use are outside our control, we make NO WARRANTY, EXPRESS OR

ACROS ORGANICS

HELP CATALOGS SEARCH ORDER LIST CONTENTS

MATERIAL SAFETY DATA SHEET

Chrysene, 98%
95251

**** SECTION 1 - CHEMICAL PRODUCT AND COMPANY IDENTIFICATION ****

MSDS Name: Chrysene, 98%

```
     1,2 Benzophenanthrene; Benzo(a)phenanthrene.
Company Identification:  Acros Organics N.V.
                         One Reagent Lane
                         Fairlawn, NJ  07410
For information in North America, call:   800-ACROS-01
For emergencies in the US, call CHEMTREC: 800-424-9300
```

**** SECTION 2 - COMPOSITION, INFORMATION ON INGREDIENTS ****

CAS#	Chemical Name	%	EINECS#
218-01-9	Chrysene, 98%	98%	205-923-4

Hazard Symbols: T
Risk Phrases: 45

**** SECTION 3 - HAZARDS IDENTIFICATION ****

EMERGENCY OVERVIEW

Appearance: very light beige.
Caution! Carcinogen. Mutagen. May cause eye and skin irritation. May cause respiratory and digestive tract irritation. May cause cancer in humans.
Target Organs: Liver, skin.

Potential Health Effects

Eye:
May cause eye irritation.

Skin:
May cause skin irritation.

Ingestion:
May cause gastrointestinal irritation with nausea, vomiting and diarrhea.

Inhalation:
May cause respiratory tract irritation.

Chronic:
May cause cancer in humans. May cause cancer according to animal studies.

**** SECTION 4 - FIRST AID MEASURES ****

Eyes:
Immediately flush eyes with plenty of water for at least 15 minutes, occasionally lifting the upper and lower lids. Get medical aid.

Skin:
Get medical aid. Immediately flush skin with plenty of soap and water for at least 15 minutes while removing contaminated clothing and shoes.

Ingestion:
Do NOT induce vomiting. If victim is conscious and alert, give 2-4 cupfuls of milk or water. Never give anything by mouth to an unconscious person. Get medical aid immediately.

Inhalation:
Get medical aid immediately. Remove from exposure to fresh air immediately. If not breathing, give artificial respiration. If breathing is difficult, give oxygen.

Notes to Physician:
Treat symptomatically and supportively.

**** SECTION 5 - FIRE FIGHTING MEASURES ****

General Information:
As in any fire, wear a self-contained breathing apparatus in pressure-demand, MSHA/NIOSH (approved or equivalent), and full protective gear. During a fire, irritating and highly toxic gases may be generated by thermal decomposition or combustion.

Extinguishing Media:
In case of fire use water spray, dry chemical, carbon dioxide, or chemical foam.

Autoignition Temperature: Not available.
Flash Point: Not available.
NFPA Rating: Not published.
Explosion Limits, Lower: Not available.
Upper: Not available.

**** SECTION 6 - ACCIDENTAL RELEASE MEASURES ****

General Information: Use proper personal protective equipment as indicated in Section 8.

Spills/Leaks:
Vacuum or sweep up material and place into a suitable disposal container. Clean up spills immediately, observing precautions in the Protective Equipment section. Wear a self contained breathing apparatus and appropriate Personal protection. (See Exposure Controls, Personal Protection section).

**** SECTION 7 - HANDLING and STORAGE ****

Handling:
Wash thoroughly after handling. Wash hands before eating. Use only in a well ventilated area. Do not breathe dust, vapor, mist, or gas. Do not get on skin or in eyes. Do not ingest or inhale.

Storage:
Store in a cool, dry place. Store in a tightly closed container.

**** SECTION 8 - EXPOSURE CONTROLS, PERSONAL PROTECTION ****

Engineering Controls:
Use adequate general or local exhaust ventilation to keep airborne concentrations below the permissible exposure limits.

Exposure Limits

Chemical Name	ACGIH	NIOSH	OSHA - Final PELs
Chrysene, 98%	as benzene solubles: 0.2 mg/m3 (listed under COAL TAR PITCHES).	none listed	benzene soluble fraction: 0.2 mg/m3 TWA (includes anthracene, BaP, phenanthrene, acridine, chrysene, and pyrene) (listed under COAL TAR PITCHES).

OSHA Vacated PELs:
Chrysene, 98%:
benzene soluble fraction: 0.2 mg/m3 TWA (anthracene, BaP, phenathrene, acridine, (listed under COAL TAR PITCHES)

Personal Protective Equipment

Eyes:
Wear appropriate protective eyeglasses or chemical safety goggles as described by OSHA's eye and face protection regulations in 29 CFR 1910.133 or European Standard EN166.

Skin:
Wear appropriate protective gloves to prevent skin exposure.

Clothing:
Wear appropriate protective clothing to prevent skin exposure.

Respirators:
Follow the OSHA respirator regulations found in 29CFR 1910.134 or European Standard EN 149. Always use a NIOSH or European Standard EN 149 approved respirator when necessary.

**** SECTION 9 - PHYSICAL AND CHEMICAL PROPERTIES ****

Physical State:	Solid
Appearance:	very light beige
Odor:	Not available.
pH:	Not available.
Vapor Pressure:	Not available.
Vapor Density:	Not available.
Evaporation Rate:	Not available.
Viscosity:	Not available.
Boiling Point:	448 deg C @ 760.00mm Hg
Freezing/Melting Point:	254 - 255 deg C
Decomposition Temperature:	Not available.
Solubility:	insoluble
Specific Gravity/Density:	Not available.
Molecular Formula:	C18H12
Molecular Weight:	228.29

**** SECTION 10 - STABILITY AND REACTIVITY ****

Chemical Stability:

Stable under normal temperatures and pressures.
Conditions to Avoid:
Incompatible materials, dust generation.
Incompatibilities with Other Materials:
Strong oxidizing agents.
Hazardous Decomposition Products:
Carbon monoxide, carbon dioxide.
Hazardous Polymerization: Has not been reported.

**** SECTION 11 - TOXICOLOGICAL INFORMATION ****

RTECS#:
CAS# 218-01-9: GC0700000
LD50/LC50:
Not available.
Carcinogenicity:
Chrysene, 98% -
ACGIH: A3 - Animal Carcinogen
California: carcinogen - initial date 1/1/90
NIOSH: occupational carcinogen (listed as COAL TAR PITCHES)
NTP: Known carcinogen (listed as COAL TAR PITCHES).
OSHA: Select carcinogen (listed as COAL TAR PITCHES).
IARC: Group 3 carcinogen
Mutagenicity:
Chrysene was mutagenic to S. Typhimurium in the presence of an exogenous metabolic system.
Other Studies:
Genotoxicity : Salmonella typhimurium TA97,TA98,TA100 with m etabolic activation positive (Sakai.M.et al Mutat.Res. 198 5); Saccharomyces cerrevisae (Miotic recombination) D3 str ain 330mg/kg negative.

**** SECTION 12 - ECOLOGICAL INFORMATION ****

Ecotoxicity:
Fish toxicity : LC50 (96hr) Neauthes arenacedentata >1ppm.(Rossi,S.S. et al Marine Pollut. Bull. 1978) Invertebrate toxicity : lethal treshold concentration (24hr) Daphnia Magna 0,7|g/l.(* Newsted,J.L. et al Environ. Toxicol. Chem. 1987) Bioaccumulation : 24hr Daphnia Magna log bioconcentration factor 3.7845 (*)
Environmental Fate:
Degradation studies : biodegradated by white rot fungus (Proc.Annu.Meet.Am.Wood-Preserv.Assoc. 1989) May be utilised by axenic cultures of microorganisms e.g. Pseudomonas pancimobilis EPA505, which may have novel degradative systems (Mueller,J.G. et al Appl.Environ.Microbiol.1990; Mueller, J.G. et al Environ.Sci.Technol.1991)

**** SECTION 13 - DISPOSAL CONSIDERATIONS ****

Dispose of in a manner consistent with federal, state, and local regulations.
RCRA D-Series Maximum Concentration of Contaminants:
None listed.
RCRA D-Series Chronic Toxicity Reference Levels: None listed.
RCRA F-Series: None listed.
RCRA P-Series: None listed.
RCRA U-Series: CAS# 218-01-9: waste number U050.
CAS# 218-01-9 is banned from land disposal according to RCRA.

**** SECTION 14 - TRANSPORT INFORMATION ****

US DOT
No information available
IMO
Not regulated as a hazardous material.
IATA
Not regulated as a hazardous material.
RID/ADR
Not regulated as a hazardous material.
Canadian TDG
No information available.

**** SECTION 15 - REGULATORY INFORMATION ****

US FEDERAL
TSCA
CAS# 218-01-9 is listed on the TSCA inventory.
Health & Safety Reporting List
None of the chemicals are on the Health & Safety Reporting List.
Chemical Test Rules
None of the chemicals in this product are under a Chemical Test Rule.
Section 12b
None of the chemicals are listed under TSCA Section 12b.
TSCA Significant New Use Rule
None of the chemicals in this material have a SNUR under TSCA.
SARA
Section 302 (RQ)
CAS# 218-01-9: final RQ = 100 pounds (45.4 kg)
Section 302 (TPQ)
None of the chemicals in this product have a TPQ.
Section 313
This material contains Chrysene, 98% (CAS# 218-01-9, 98%),which is subject to the reporting requirements of Section 313 of SARA Title III and 40 CFR Part 373.
Clean Air Act:
This material does not contain any hazardous air pollutants.
This material does not contain any Class 1 Ozone depletors.
This material does not contain any Class 2 Ozone depletors.
Clean Water Act:
None of the chemicals in this product are listed as Hazardous Substances under the CWA.
CAS# 218-01-9 is listed as a Priority Pollutant under the Clean Water Act.
None of the chemicals in this product are listed as Toxic Pollutants under the CWA.
OSHA:
None of the chemicals in this product are considered highly hazardous by OSHA.
STATE
Chrysene, 98% can be found on the following state right to know lists: California, New Jersey, Florida, Pennsylvania, Minnesota, Massachusetts.
The following statement(s) is(are) made in order to comply with the California Safe Drinking Water Act:
WARNING: This product contains Chrysene, 98%, a chemical known to the state of California to cause cancer.
California No Significant Risk Level:
None of the chemicals in this product are listed.
European/International Regulations
European Labeling in Accordance with EC Directives
Hazard Symbols: T
Risk Phrases:
R 45 May cause cancer.
Safety Phrases:

S 45 In case of accident of if you feel unwell, seek medical advice immediately (show the label where possible).
S 53 Avoid exposure - obtain special instructions before use.

WGK (Water Danger/Protection)
CAS# 218-01-9: No information available.

Canada
CAS# 218-01-9 is listed on Canada's DSL/NDSL List.
WHMIS: Not available.
CAS# 218-01-9 is not listed on Canada's Ingredient Disclosure List.

Exposure Limits
CAS# 218-01-9:. OEL-AUSTRALIA;Carcinogen. OEL-BELGIUM;Carcinogen -GERMANY;Carcinogen. OEL-SWITZERLAND;Carcinogen. OEL IN BULGARIA, COLOMBIA, JORDAN, KOREA check ACGIH TLV. OEL IN NEW ZEALAND, SINGAPORE, VIETNAM check ACGI TLV

**** SECTION 16 - ADDITIONAL INFORMATION ****

MSDS Creation Date: 6/19/1995 Revision #2 Date: 9/02/1997

The information above is believed to be accurate and represents the best information currently available to us. However, we make no warranty of merchantability or any other warranty, express or implied, with respect to such information, and we assume no liability resulting from its use. Users should make their own investigations to determine the suitability of the information for their particular purposes. In no way shall Fisher be liable for any claims, losses, or damages of any third party or for lost profits or any special, indirect, incidental, consequential or exemplary damages, howsoever arising, even if Fisher has been advised of the possibility of such damages.

Back to product information.

ACROS ORGANICS
HELP CATALOGS SEARCH ORDER LIST CONTENTS

MATERIAL SAFETY DATA SHEET

Di-n-octyl phthalate, 95% (gc)
59857

**** SECTION 1 - CHEMICAL PRODUCT AND COMPANY IDENTIFICATION ****

MSDS Name: Di-n-octyl phthalate, 95% (gc)

Company Identification: Acros Organics N.V.
One Reagent Lane
Fairlawn, NJ 07410
For information in North America, call: 800-ACROS-01
For emergencies in the US, call CHEMTREC: 800-424-9300

**** SECTION 2 - COMPOSITION, INFORMATION ON INGREDIENTS ****

CAS#	Chemical Name	%	EINECS#
117-84-0	Di-n-octyl phthalate		204-214-7

**** SECTION 3 - HAZARDS IDENTIFICATION ****

EMERGENCY OVERVIEW

Not available.
Appearance: Not available.
Not available.
Target Organs: None.

Potential Health Effects
The toxicological properties of this material have not been investigated. Use appropriate procedures to prevent opportunities for direct contact with the skin or eyes and to prevent inhalation.

**** SECTION 4 - FIRST AID MEASURES ****

Eyes:
Flush eyes with plenty of water for at least 15 minutes, occasionally lifting the upper and lower lids. Get medical aid immediately.

Skin:
Get medical aid. Flush skin with plenty of soap and water for at least 15 minutes while removing contaminated clothing and shoes. Remove contaminated clothing and shoes.

Ingestion:
If victim is conscious and alert, give 2-4 cupfuls of milk or water.

Get medical aid immediately.

Inhalation:

Get medical aid immediately. Remove from exposure to fresh air immediately. If not breathing, give artificial respiration. If breathing is difficult, give oxygen.

Notes to Physician:

Treat symptomatically and supportively.

**** SECTION 5 - FIRE FIGHTING MEASURES ****

General Information:

As in any fire, wear a self-contained breathing apparatus in pressure-demand, MSHA/NIOSH (approved or equivalent), and full protective gear. During a fire, irritating and highly toxic gases may be generated by thermal decomposition or combustion.

Extinguishing Media:

Use agent most appropriate to extinguish fire.

Autoignition Temperature: Not available.

Flash Point: 199 deg C (390.20 deg F)

NFPA Rating: health-0; flammability-1; reactivity-0

Explosion Limits, Lower: Not available.
Upper: Not available.

**** SECTION 6 - ACCIDENTAL RELEASE MEASURES ****

General Information: Use proper personal protective equipment as indicated in Section 8.

Spills/Leaks:

Clean up spills immediately, observing precautions in the Protective Equipment section.

**** SECTION 7 - HANDLING and STORAGE ****

Handling:

Wash thoroughly after handling. Remove contaminated clothing and wash before reuse. Avoid contact with eyes, skin, and clothing. Avoid ingestion and inhalation.

Storage:

Store in a cool, dry place. Keep container closed when not in use.

**** SECTION 8 - EXPOSURE CONTROLS, PERSONAL PROTECTION ****

Engineering Controls:

Use process enclosure, local exhaust ventilation, or other engineering controls to control airborne levels.

Exposure Limits

Chemical Name	ACGIH	NIOSH	OSHA - Final PELs
Di-n-octyl phthalate	none listed	none listed	none listed

OSHA Vacated PELs:

Di-n-octyl phthalate:

No OSHA Vacated PELs are listed for this chemical.

Personal Protective Equipment

Eyes:

Wear chemical goggles.

Skin:

Wear appropriate protective gloves to prevent skin exposure.

Clothing:

Wear appropriate protective clothing to minimize contact with skin.

Respirators:

A respiratory protection program that meets OSHA's 29 CFR ¦1910.134 and ANSI Z88.2 requirements or European Standard EN 149 must be followed whenever workplace conditions warrant a respirator's use.

**** SECTION 9 - PHYSICAL AND CHEMICAL PROPERTIES ****

Physical State:	Not available.
Appearance:	Not available.
Odor:	Not available.
pH:	Not available.
Vapor Pressure:	Not available.
Vapor Density:	Not available.
Evaporation Rate:	Not available.
Viscosity:	Not available.
Boiling Point:	228 deg C @ 1.00mm Hg
Freezing/Melting Point:	0 deg C
Decomposition Temperature:	Not available.
Solubility:	Not available.
Specific Gravity/Density:	.9820g/cm3
Molecular Formula:	C24H3804
Molecular Weight:	390.55

**** SECTION 10 - STABILITY AND REACTIVITY ****

Chemical Stability:
Stable under normal temperatures and pressures.
Conditions to Avoid:
Incompatible materials, strong oxidants.
Incompatibilities with Other Materials:
Not available.
Hazardous Decomposition Products:
Irritating and toxic fumes and gases.
Hazardous Polymerization: Not available.

**** SECTION 11 - TOXICOLOGICAL INFORMATION ****

RTECS#:
CAS# 117-84-0: TI1925000
LD50/LC50:
CAS# 117-84-0: Oral, mouse: LD50 = 6513 mg/kg; Oral, rat: LD50 = 47 gm/kg.
Carcinogenicity:
Di-n-octyl phthalate -
Not listed by ACGIH, IARC, NIOSH, NTP, or OSHA.

**** SECTION 12 - ECOLOGICAL INFORMATION ****

**** SECTION 13 - DISPOSAL CONSIDERATIONS ****

Dispose of in a manner consistent with federal, state, and local regulations.
RCRA D-Series Maximum Concentration of Contaminants:
None listed.
RCRA D-Series Chronic Toxicity Reference Levels: None listed.
RCRA F-Series: None listed.

RCRA P-Series: None listed.
RCRA U-Series: CAS# 117-84-0: waste number U107.
CAS# 117-84-0 is banned from land disposal according to RCRA.

**** SECTION 14 - TRANSPORT INFORMATION ****

US DOT
No information available
IMO
Not regulated as a hazardous material.
IATA
Not regulated as a hazardous material.
RID/ADR
Not regulated as a hazardous material.
Canadian TDG
No information available.

**** SECTION 15 - REGULATORY INFORMATION ****

US FEDERAL
TSCA
CAS# 117-84-0 is listed on the TSCA inventory.
Health & Safety Reporting List
None of the chemicals are on the Health & Safety Reporting List.
Chemical Test Rules
None of the chemicals in this product are under a Chemical Test Rule.
Section 12b
None of the chemicals are listed under TSCA Section 12b.
TSCA Significant New Use Rule
None of the chemicals in this material have a SNUR under TSCA.
SARA
Section 302 (RQ)
CAS# 117-84-0: final RQ = 5000 pounds (2270 kg)
Section 302 (TPQ)
None of the chemicals in this product have a TPQ.
Section 313
No chemicals are reportable under Section 313.
Clean Air Act:
This material does not contain any hazardous air pollutants.
This material does not contain any Class 1 Ozone depletors.
This material does not contain any Class 2 Ozone depletors.
Clean Water Act:
None of the chemicals in this product are listed as Hazardous Substances under the CWA.
CAS# 117-84-0 is listed as a Priority Pollutant under the Clean Water Act.
None of the chemicals in this product are listed as Toxic Pollutants under the CWA.
OSHA:
None of the chemicals in this product are considered highly hazardous by OSHA.
STATE
Di-n-octyl phthalate can be found on the following state right to know lists: California, New Jersey, Pennsylvania, Massachusetts.
California No Significant Risk Level:
None of the chemicals in this product are listed.
European/International Regulations
European Labeling in Accordance with EC Directives
Hazard Symbols: Not available.
Risk Phrases:
Safety Phrases:
S 24/25 Avoid contact with skin and eyes.

WGK (Water Danger/Protection)
CAS# 117-84-0: 3
Canada
CAS# 117-84-0 is listed on Canada's DSL/NDSL List.
WHMIS: Not available.
CAS# 117-84-0 is not listed on Canada's Ingredient Disclosure List.
Exposure Limits

**** SECTION 16 - ADDITIONAL INFORMATION ****

MSDS Creation Date: 2/28/1995 Revision #1 Date: 3/04/1996

The information above is believed to be accurate and represents the best information currently available to us. However, we make no warranty of merchantability or any other warranty, express or implied, with respect to such information, and we assume no liability resulting from its use. Users should make their own investigations to determine the suitability of the information for their particular purposes. In no way shall Fisher be liable for any claims, losses, or damages of any third party or for lost profits or any special, indirect, incidental, consequential or exemplary damages, howsoever arising, even if Fisher has been advised of the possibility of such damages.

Back to product information.

ACROS ORGANICS

HELP CATALOGS SEARCH ORDER LIST CONTENTS

MATERIAL SAFETY DATA SHEET

Fluoranthene, 98%
80991

**** SECTION 1 - CHEMICAL PRODUCT AND COMPANY IDENTIFICATION ****

MSDS Name: Fluoranthene, 98%

Company Identification: Acros Organics N.V.
One Reagent Lane
Fairlawn, NJ 07410
For information in North America, call: 800-ACROS-01
For emergencies in the US, call CHEMTREC: 800-424-9300

**** SECTION 2 - COMPOSITION, INFORMATION ON INGREDIENTS ****

CAS#	Chemical Name	%	EINECS#
206-44-0	Fluoranthene, 98%		205-912-4

Hazard Symbols: XN
Risk Phrases: 21/22

**** SECTION 3 - HAZARDS IDENTIFICATION ****

EMERGENCY OVERVIEW
Appearance: yellow fine fluffy powder.

Target Organs: None.

Potential Health Effects
The toxicological properties of this material have not been investigated. Use appropriate procedures to prevent opportunities for direct contact with the skin or eyes and to prevent inhalation.

**** SECTION 4 - FIRST AID MEASURES ****

Eyes:
Immediately flush eyes with plenty of water for at least 15 minutes, occasionally lifting the upper and lower lids.
Skin:
Flush skin with plenty of soap and water for at least 15 minutes while removing contaminated clothing and shoes.
Ingestion:

Do NOT induce vomiting. Allow the victim to rinse his mouth and then to drink 2-4 cupfuls of water, and seek medical advice.

Inhalation:
Remove from exposure to fresh air immediately.

Notes to Physician:
Treat symptomatically and supportively.

**** SECTION 5 - FIRE FIGHTING MEASURES ****

General Information:
As in any fire, wear a self-contained breathing apparatus in pressure-demand, MSHA/NIOSH (approved or equivalent), and full protective gear. During a fire, irritating and highly toxic gases may be generated by thermal decomposition or combustion.

Extinguishing Media:
In case of fire, use water, dry chemical, chemical foam, or alcohol-resistant foam.

Autoignition Temperature: Not available.
Flash Point: Not available.
NFPA Rating: Not published.
Explosion Limits, Lower: Not available.
Upper: Not available.

**** SECTION 6 - ACCIDENTAL RELEASE MEASURES ****

General Information: Use proper personal protective equipment as indicated in Section 8.

Spills/Leaks:
Clean up spills immediately, observing precautions in the Protective Equipment section. Sweep up, then place into a suitable container for disposal.

**** SECTION 7 - HANDLING and STORAGE ****

Handling:
Wash thoroughly after handling. Remove contaminated clothing and wash before reuse. Avoid contact with eyes, skin, and clothing. Avoid ingestion and inhalation.

Storage:
Store in a cool, dry place. Keep container closed when not in use.

**** SECTION 8 - EXPOSURE CONTROLS, PERSONAL PROTECTION ****

Engineering Controls:
Use adequate general or local exhaust ventilation to keep airborne concentrations below the permissible exposure limits. Use process enclosure, local exhaust ventilation, or other engineering controls to control airborne levels.

Exposure Limits

Chemical Name	ACGIH	NIOSH	OSHA - Final PELs
Fluoranthene, 98%	none listed	none listed	none listed

OSHA Vacated PELs:
Fluoranthene, 98%:
No OSHA Vacated PELs are listed for this chemical.

Personal Protective Equipment

Eyes:

Wear safety glasses and chemical goggles if splashing is possible.

Skin:

Wear appropriate protective gloves and clothing to prevent skin exposure.

Clothing:

Wear appropriate protective clothing to minimize contact with skin.

Respirators:

Wear a NIOSH/MSHA or European Standard EN 149 approved full-facepiece airline respirator in the positive pressure mode with emergency escape provisions.

**** SECTION 9 - PHYSICAL AND CHEMICAL PROPERTIES ****

Physical State:	Not available.
Appearance:	yellow
Odor:	None reported.
pH:	Not available.
Vapor Pressure:	Not available.
Vapor Density:	Not available.
Evaporation Rate:	Not available.
Viscosity:	Not available.
Boiling Point:	384 deg C @ 760.00mmHg
Freezing/Melting Point:	107.00 - 110.00 deg C
Decomposition Temperature:	Not available.
Solubility:	insoluble
Specific Gravity/Density:	Not available.
Molecular Formula:	C16H10
Molecular Weight:	202.25

**** SECTION 10 - STABILITY AND REACTIVITY ****

Chemical Stability:
Stable under normal temperatures and pressures.
Conditions to Avoid:
Incompatible materials, strong oxidants.
Incompatibilities with Other Materials:
Strong oxidizing agents.
Hazardous Decomposition Products:
Carbon monoxide, irritating and toxic fumes and gases, carbon dioxide.
Hazardous Polymerization: Has not been reported.

**** SECTION 11 - TOXICOLOGICAL INFORMATION ****

RTECS#:
CAS# 206-44-0: LL4025000
LD50/LC50:
CAS# 206-44-0: Oral, rat: LD50 = 2 gm/kg; Skin, rabbit: LD50 = 3180 mg/kg.
Carcinogenicity:
Fluoranthene, 98% -
IARC: Group 3 carcinogen

**** SECTION 12 - ECOLOGICAL INFORMATION ****

Ecotoxicity:
Not available.

**** SECTION 13 - DISPOSAL CONSIDERATIONS ****

Dispose of in a manner consistent with federal, state, and local regulations.
RCRA D-Series Maximum Concentration of Contaminants:
None listed.
RCRA D-Series Chronic Toxicity Reference Levels: None listed.
RCRA F-Series: None listed.
RCRA P-Series: None listed.
RCRA U-Series: CAS# 206-44-0: waste number U120.
CAS# 206-44-0 is banned from land disposal according to RCRA.

**** SECTION 14 - TRANSPORT INFORMATION ****

US DOT
No information available
IMO
Not regulated as a hazardous material.
IATA
Not regulated as a hazardous material.
RID/ADR
Not regulated as a hazardous material.
Canadian TDG
No information available.

**** SECTION 15 - REGULATORY INFORMATION ****

US FEDERAL
TSCA
CAS# 206-44-0 is listed on the TSCA inventory.
Health & Safety Reporting List
None of the chemicals are on the Health & Safety Reporting List.
Chemical Test Rules
None of the chemicals in this product are under a Chemical Test Rule.
Section 12b
None of the chemicals are listed under TSCA Section 12b.
TSCA Significant New Use Rule
None of the chemicals in this material have a SNUR under TSCA.
SARA
Section 302 (RQ)
CAS# 206-44-0: final RQ = 100 pounds (45.4 kg)
Section 302 (TPQ)
None of the chemicals in this product have a TPQ.
SARA Codes
CAS # 206-44-0: acute.
Section 313
No chemicals are reportable under Section 313.
Clean Air Act:
This material does not contain any hazardous air pollutants.
This material does not contain any Class 1 Ozone depletors.
This material does not contain any Class 2 Ozone depletors.
Clean Water Act:
None of the chemicals in this product are listed as Hazardous Substances under the CWA.
CAS# 206-44-0 is listed as a Priority Pollutant under the Clean Water Act.
CAS# 206-44-0 is listed as a Toxic Pollutant under the Clean Water Act.
OSHA:
None of the chemicals in this product are considered highly hazardous by OSHA.
STATE
Fluoranthene, 98% can be found on the following state right to know lists: California, New Jersey, Pennsylvania, Massachusetts.

California No Significant Risk Level:
None of the chemicals in this product are listed.

European/International Regulations

European Labeling in Accordance with EC Directives

Hazard Symbols: XN

Risk Phrases:

R 21/22 Harmful in contact with skin and if swallowed.

Safety Phrases:

S 22 Do not inhale dust.

S 24/25 Avoid contact with skin and eyes.

WGK (Water Danger/Protection)

CAS# 206-44-0: No information available.

Canada

None of the chemicals in this product are listed on the DSL/NDSL list.

WHMIS: Not available.

CAS# 206-44-0 is not listed on Canada's Ingredient Disclosure List.

Exposure Limits

**** SECTION 16 - ADDITIONAL INFORMATION ****

MSDS Creation Date: 3/01/1994 Revision #2 Date: 9/02/1997

The information above is believed to be accurate and represents the best information currently available to us. However, we make no warranty of merchantability or any other warranty, express or implied, with respect to such information, and we assume no liability resulting from its use. Users should make their own investigations to determine the suitability of the information for their particular purposes. In no way shall Fisher be liable for any claims, losses, or damages of any third party or for lost profits or any special, indirect, incidental, consequential or exemplary damages, howsoever arising, even if Fisher has been advised of the possibility of such damages.

Back to product information.

ACROS ORGANICS

HELP CATALOGS SEARCH ORDERLIST CONTENTS

MATERIAL SAFETY DATA SHEET

Benzo[k]fluoranthene, 99+% (tlc)
54641

**** SECTION 1 - CHEMICAL PRODUCT AND COMPANY IDENTIFICATION ****

MSDS Name: Benzo[k]fluoranthene, 99+% (tlc)

```
     8,9-Benzofluoranthane.
Company Identification:  Acros Organics N.V.
                         One Reagent Lane
                         Fairlawn, NJ  07410
For information in North America, call:   800-ACROS-01
For emergencies in the US, call CHEMTREC: 800-424-9300
```

**** SECTION 2 - COMPOSITION, INFORMATION ON INGREDIENTS ****

CAS#	Chemical Name	%	EINECS#
207-08-9	Benzo[k]fluoranthene, 99+% (TLC)	99%	205-916-6

Hazard Symbols: T
Risk Phrases: 45

**** SECTION 3 - HAZARDS IDENTIFICATION ****

EMERGENCY OVERVIEW

Appearance: yellow.
Danger! May be fatal if swallowed. May be fatal if absorbed through the skin. Toxic. Carcinogen. May cause lung damage. Causes eye and skin irritation. Causes digestive and respiratory tract irritation. Cancer hazard. May be fatal if inhaled.
Target Organs: Lungs, respiratory system.

Potential Health Effects

Eye:
Causes eye irritation.

Skin:
Causes skin irritation. May be fatal if absorbed through the skin.

Ingestion:
May be fatal if swallowed. Causes gastrointestinal irritation with nausea, vomiting and diarrhea.

Inhalation:
May be fatal if inhaled. Causes respiratory tract irritation.

Chronic:
May cause cancer according to animal studies.

**** SECTION 4 - FIRST AID MEASURES ****

Eyes:
Immediately flush eyes with plenty of water for at least 15 minutes, occasionally lifting the upper and lower lids. Get medical aid immediately.

Skin:
Get medical aid. Immediately flush skin with plenty of soap and water for at least 15 minutes while removing contaminated clothing and shoes.

Ingestion:
If victim is conscious and alert, give 2-4 cupfuls of milk or water. Never give anything by mouth to an unconscious person. Get medical aid immediately. Induce vomiting by giving one teaspoon of Syrup of Ipecac.

Inhalation:
Get medical aid immediately. Remove from exposure to fresh air immediately. If not breathing, give artificial respiration. If breathing is difficult, give oxygen.

Notes to Physician:
Treat symptomatically and supportively.

**** SECTION 5 - FIRE FIGHTING MEASURES ****

General Information:
As in any fire, wear a self-contained breathing apparatus in pressure-demand, MSHA/NIOSH (approved or equivalent), and full protective gear. During a fire, irritating and highly toxic gases may be generated by thermal decomposition or combustion.

Extinguishing Media:
In case of fire use water spray, dry chemical, carbon dioxide, or chemical foam.

Autoignition Temperature: Not available.
Flash Point: Not available.
NFPA Rating: Not published.
Explosion Limits, Lower: Not available.
Upper: Not available.

**** SECTION 6 - ACCIDENTAL RELEASE MEASURES ****

General Information: Use proper personal protective equipment as indicated in Section 8.

Spills/Leaks:
Vacuum or sweep up material and place into a suitable disposal container. Clean up spills immediately, observing precautions in the Protective Equipment section.

**** SECTION 7 - HANDLING and STORAGE ****

Handling:
Wash thoroughly after handling. Wash hands before eating. Remove contaminated clothing and wash before reuse. Use only in a well ventilated area. Do not breathe dust, vapor, mist, or gas. Do not get on skin or in eyes. Do not ingest or inhale.

Storage:
Store in a cool, dry place. Store in a tightly closed container.

**** SECTION 8 - EXPOSURE CONTROLS, PERSONAL PROTECTION ****

Engineering Controls:
Use process enclosure, local exhaust ventilation, or other engineering controls to control airborne levels below recommended

exposure limits.

Exposure Limits

Chemical Name	ACGIH	NIOSH	OSHA - Final PELs
Benzo[k]fluoranthene, 99+% (TLC)	none listed	none listed	none listed

OSHA Vacated PELs:
Benzo[k]fluoranthene, 99+% (TLC):
No OSHA Vacated PELs are listed for this chemical.

Personal Protective Equipment

Eyes:
Wear appropriate protective eyeglasses or chemical safety goggles as described by OSHA's eye and face protection regulations in 29 CFR 1910.133 or European Standard EN166.

Skin:
Wear appropriate protective gloves to prevent skin exposure.

Clothing:
Wear appropriate protective clothing to prevent skin exposure.

Respirators:
Follow the OSHA respirator regulations found in 29CFR 1910.134 or European Standard EN 149. Always use a NIOSH or European Standard EN 149 approved respirator when necessary.

**** SECTION 9 - PHYSICAL AND CHEMICAL PROPERTIES ****

Physical State:	Solid
Appearance:	yellow
Odor:	Not available.
pH:	Not available.
Vapor Pressure:	Not available.
Vapor Density:	Not available.
Evaporation Rate:	Not available.
Viscosity:	Not available.
Boiling Point:	480 deg C @ 760.00mm Hg
Freezing/Melting Point:	216 - 218 deg C
Decomposition Temperature:	Not available.
Solubility:	Not available.
Specific Gravity/Density:	Not available.
Molecular Formula:	C20H12
Molecular Weight:	252.32

**** SECTION 10 - STABILITY AND REACTIVITY ****

Chemical Stability:
Stable under normal temperatures and pressures.
Conditions to Avoid:
Incompatible materials, dust generation.
Incompatibilities with Other Materials:
Strong oxidants.
Hazardous Decomposition Products:
Carbon monoxide, carbon dioxide.
Hazardous Polymerization: Has not been reported.

**** SECTION 11 - TOXICOLOGICAL INFORMATION ****

RTECS#:
CAS# 207-08-9: DF6350000
LD50/LC50:
Not available.
Carcinogenicity:
Benzo[k]fluoranthene, 99+% (TLC) -
California: carcinogen - initial date 7/1/87
NTP: Suspect carcinogen
OSHA: Possible Select carcinogen
IARC: Group 2B carcinogen
Mutagenicity:
Samonella typhimurium : 10|g/plate

**** SECTION 12 - ECOLOGICAL INFORMATION ****

Ecotoxicity:
From calc logKow of 6.84, the est bioconc factor for fish is 144. However no accum is likely due to the pres of microsomal mixed funct oxidases which enables it to be metabolised (Lyman,W.J. Handb of chem.prop est meth. Env behaviour of org chem 1982; Santodonato, J. Health and ecol assessment of polynucl arom hydrocarb. 1981) Short-necked clam cultured in artif seawater at 21-25_C for 10 days revealed a decr in benzo[k].. of ca 20% on day 8. When clams were placed in a basket and kept in harbour water, only a small incr in polycycl arom hydrocarb were found.
Environmental Fate:
When soil treated with 7 applications of oil sludge containing polynucleated arom. hydrocarb. over a two yr period, was monitored for an additional 18 months, the benzo[k]fluoranthene residue in the soil decreased by 57%. In a static biodegrad. test employing a domestic wastewater inoculum, 50-70% of benzo[k]fluoranthene residue in the soil decreased by 57%. In a static biodegrad. test employing a dometic wastewater inoculum, 50-70% of benzo[k]fluoranthene was degradated in four successive weekkly subcultures (Tabak H.H. 94th An.Mtg.Assoc.Off.Anal.Chem.1981)
Other:
Abiotic removal : Demonstrates considerable atmospheric stability. Pollution resulting from emissions can be found far from source. (Bjorseth A. Handbook of polycyclic aromatic hydrocarbons 1983, MArcel Dekker Inc., New York)

**** SECTION 13 - DISPOSAL CONSIDERATIONS ****

Dispose of in a manner consistent with federal, state, and local regulations.
RCRA D-Series Maximum Concentration of Contaminants:
None listed.
RCRA D-Series Chronic Toxicity Reference Levels: None listed.
RCRA F-Series: None listed.
RCRA P-Series: None listed.
RCRA U-Series: None listed.
Not listed as a material banned from land disposal according to RCRA.

**** SECTION 14 - TRANSPORT INFORMATION ****

US DOT
No information available
IMO
Not regulated as a hazardous material.
IATA

Not regulated as a hazardous material.

RID/ADR

Not regulated as a hazardous material.

Canadian TDG

No information available.

**** SECTION 15 - REGULATORY INFORMATION ****

US FEDERAL

TSCA

CAS# 207-08-9 is not listed on the TSCA inventory.
It is for research and development use only.

Health & Safety Reporting List

None of the chemicals are on the Health & Safety Reporting List.

Chemical Test Rules

None of the chemicals in this product are under a Chemical Test Rule.

Section 12b

None of the chemicals are listed under TSCA Section 12b.

TSCA Significant New Use Rule

None of the chemicals in this material have a SNUR under TSCA.

SARA

Section 302 (RQ)

CAS# 207-08-9: final RQ = 1 pound (0.454 kg)

Section 302 (TPQ)

None of the chemicals in this product have a TPQ.

Section 313

This material contains Benzo[k]fluoranthene, 99+% (TL (CAS# 207-08-9, 99%),which is subject to the reporting requirements of Section 313 of SARA Title III and 40 CFR Part 373.

Clean Air Act:

This material does not contain any hazardous air pollutants.
This material does not contain any Class 1 Ozone depletors.
This material does not contain any Class 2 Ozone depletors.

Clean Water Act:

None of the chemicals in this product are listed as Hazardous Substances under the CWA.
CAS# 207-08-9 is listed as a Priority Pollutant under the Clean Water Act.
None of the chemicals in this product are listed as Toxic Pollutants under the CWA.

OSHA:

None of the chemicals in this product are considered highly hazardous by OSHA.

STATE

Benzo[k]fluoranthene, 99+% (TL can be found on the following state right to know lists: California, New Jersey, Florida, Pennsylvania, Minnesota, Massachusetts.
The following statement(s) is(are) made in order to comply with the California Safe Drinking Water Act:
WARNING: This product contains Benzo[k]fluoranthene, 99+% (TL, a chemical known to the state of California to cause cancer.
California No Significant Risk Level:
None of the chemicals in this product are listed.

European/International Regulations

European Labeling in Accordance with EC Directives

Hazard Symbols: T
Risk Phrases:
R 45 May cause cancer.
Safety Phrases:
S 45 In case of accident of if you feel unwell, seek medical advice immediately (show the label where possible).
S 53 Avoid exposure - obtain special instructions

before use.

WGK (Water Danger/Protection)

CAS# 207-08-9: No information available.

Canada

None of the chemicals in this product are listed on the DSL/NDSL list.

WHMIS: Not available.

CAS# 207-08-9 is not listed on Canada's Ingredient Disclosure List.

Exposure Limits

CAS# 207-08-9:. OEL-FRANCE;Carcinogen

**** SECTION 16 - ADDITIONAL INFORMATION ****

MSDS Creation Date: 6/19/1995 Revision #2 Date: 9/02/1997

The information above is believed to be accurate and represents the best information currently available to us. However, we make no warranty of merchantability or any other warranty, express or implied, with respect to such information, and we assume no liability resulting from its use. Users should make their own investigations to determine the suitability of the information for their particular purposes. In no way shall Fisher be liable for any claims, losses, or damages of any third party or for lost profits or any special, indirect, incidental, consequential or exemplary damages, howsoever arising, even if Fisher has been advised of the possibility of such damages.

Back to product information.

Material Safety Data Sheet

2-METHYLNAPHTHALENE

November 15, 1991

PHILLIPS CHEMICAL COMPANY
A Division of Phillips Petroleum Company
Bartlesville, Oklahoma 74004

PHONE NUMBERS
Emergency: (918) 661-8118
Technical Services: (918) 661-9091
For Additional MSDSs: (918) 661-7297

A. Product Identification

Synonyms: beta-Methylnaphthalene; 2-Methyl-1-Naphthalene
Chemical Name: 2-Methylnaphthalene
Chemical Family: Naphthalenes
Chemical Formula: C11H10
CAS Reg. No.: 91-57-6
Product No.: Not Established

Product and/or Components Entered on EPA's TSCA Inventory: YES

This product is in U.S. commerce, and is listed in the Toxic Substances Control Act (TSCA) Inventory of Chemicals; hence, it is subject to all applicable provisions and restrictions of 40 CFR, section 721 and 723.250.

B. Components

Ingredients	CAS Number	% By Wt.	OSHA PEL	ACGIH TLV
2-Methylnaphthalene	91-57-6	98	NE	NE
Related Compounds	Various	2	NE	NE

C. Personal Protection Information

Ventilation: Use adequate ventilation.

Respiratory Protection: Not generally required unless needed to prevent respiratory irritation. In case of spill or leak resulting in unknown concentration, or entry into confined spaces or other poorly ventilated areas, use NIOSH/MSHA approved air supplied respirator.

Eye Protection: Use safety glasses with side shield and face

shield.

Skin Protection: Use full-body, long sleeved garments impervious to the material. Use gloves impervious to the material being used (rubber or neoprene).

NOTE: Personal protection information shown in Section C is based upon general information as to normal uses and conditions. Where special or unusual uses or conditions exist, it is suggested that the expert assistance of an industrial hygienist or other qualified professional be sought.

D. Handling and Storage Precautions

Do not get in eyes, on skin or on clothing. Avoid breathing dusts. Wear protective equipment and/or garments described in Section C if exposure conditions warrant. Wash thoroughly after handling. Launder contaminated clothing before reuse. Use only with adequate ventilation.

Store in a cool, well-ventilated area. Provide means of controlling spills. Store in closed container.

E. Reactivity Data

Stability:	Stable
Conditions to Avoid:	Not Applicable
Incompatibility (Materials to Avoid):	Oxygen and strong oxidizing agents
Hazardous Polymerization:	Will Not Occur
Conditions to Avoid:	Not Applicable
Hazardous Decomposition Products:	Carbon oxides and various hydrocarbons formed when burned.

F. Health Hazard Data

Recommended Exposure Limits:

Not Established.

The toxicological properties of this product have not been tested or have not been tested completely and its handling or use may be hazardous. EXERCISE DUE CARE. The following effects of overexposure may be expected.

Acute Effects of Overexposure:

Eye: May be mildly to severely irritating.

Skin: May be severely irritating. May cause photosensitization; sunlight may react with contaminated skin to produce adverse reactions; i.e., sunburn, premature aging, immediate darkening. Extended exposure could lead to skin cancer.

Inhalation: May be irritating to mucous membranes and upper respiratory tract.

Ingestion: No known applicable information.

Subchronic and Chronic Effects of Overexposure:

No known applicable information.

Other Health Effects:

No known applicable information.

Health Hazard Categories:

	Animal	Human		Animal	Human
Known Carcinogen	___	___	Toxic	___	___
Suspect Carcinogen	___	___	Corrosive	___	___
Mutagen	___	___	Irritant	_X_	_X_
Teratogen	___	___	Target Organ Toxin	_X_	_X_
Allergic Sensitizer	___	___	Specify - Skin Hazard-Photosensitization		
Highly Toxic	___	___			

First Aid and Emergency Procedures:

Eye: Immediately flush eyes with running water for at least fifteen minutes. If irritation develops, seek medical attention.

Skin: Immediately wash skin with soap and water for at least fifteen minutes. If irritation develops, seek medical attention.

Inhalation: Remove from exposure. If breathing becomes labored or irritation develops, seek medical attention.

Ingestion: Immediately induce vomiting, only if subject is conscious. Seek medical attention.

G. Physical Data

Appearance:	White Solid
Odor:	Mild
Boiling Point:	466F (242C)
Vapor Pressure:	Not Established
Vapor Density (Air = 1):	Not Established
Solubility in Water:	Not Established
Specific Gravity (H2O = 1):	1.00
Percent Volatile by Volume:	Not Established
Evaporation Rate (Butyl Acetate = 1):	Not Established
Viscosity:	Not Established

H. Fire and Explosion Data

Flash Point (Method Used):	208F (98C) (Estimate)
Flammable Limits (% by Volume in Air):	LEL - Not Established UEL - Not Established
Fire Extinguishing Media:	Dry chemical, foam or carbon dioxide (CO2)
Special Fire Fighting Procedures:	Evacuate area of all unnecessary personnel. Shut off source, if possible. Use NIOSH/MSHA approved self-contained breathing apparatus (SCBA) and other protective equipment and/or garments described in Section C if exposure conditions warrant. Water fog or spray may be used to cool exposed equipment and containers.
Fire and Explosion Hazards:	Carbon oxides and various hydrocarbons formed when burned.

I. Spill, Leak and Disposal Procedures

Precautions Required if Material is Released or Spilled:

Evacuate area of all unnecessary personnel. Wear protective equipment and/or garments described in Section C if exposure conditions warrant. Contain spill and control dusts. Keep out of water sources and sewers. Vacuum up or spray with water and scoop up and place in impervious bags or containers.

Waste Disposal (Insure Conformity with all Applicable Disposal Regulations):

Incinerate or otherwise manage at a RCRA permitted waste management facility.

J. DOT Transportation

Shipping Name:	Not Applicable
Hazard Class:	Not Applicable
ID Number:	Not Applicable
Packing Group:	Not Applicable
Marking:	Not Applicable
Label:	Not Applicable
Placard:	Not Applicable
Hazardous Substance/RQ:	Not Applicable
Shipping Description:	Not Applicable
Packaging References:	Not Applicable

K. RCRA Classification - Unadulterated Product as a Waste

Prior to disposal, consult your environmental contact to determine if the TCLP (Toxicity Characteristic Leaching Procedure, EPA Test Method 1311) is required. Reference 40 CFR part 261.

L. Protection Required for Work on Contaminated Equipment

Contact immediate supervisor for specific instructions before work is initiated. Wear protective equipment and/or garments described in Section C if exposure conditions warrant.

M. Hazard Classification

_X_ This product meets the following hazard definition(s) as defined by the Occupational Safety and Health Hazard Communication Standard (29 CFR Section 1910.1200):

___ Combustible Liquid	___ Flammable Aerosol	___ Oxidizer
___ Compressed Gas	___ Explosive	___ Pyrophoric
___ Flammable Gas	_X_ Health Hazard (Section F)	___ Unstable
___ Flammable Liquid	___ Organic Peroxide	___ Water Reactive
___ Flammable Solid		

___ Based on information presently available, this product does not meet any of the hazard definitions of 29 CFR Section 1910.1200.

N. Additional Comments

SARA 313

As of the preparation date, this product did not contain a chemical or chemicals subject to the reporting requirements of Section 313 of Title III of the Superfund Amendments and

Reauthorization Act of 1986 and 40 CFR Part 372.

Phillips Petroleum Company (references to Phillips Petroleum Company or Phillips includes its divisions, affiliates and subsidiaries) believes that the information contained herein (including data and statements) is accurate as of the date hereof. NO WARRANTY OF MERCHANTABILITY, FITNESS FOR ANY PARTICULAR PURPOSE OR ANY OTHER WARRANTY, EXPRESS OR IMPLIED, IS MADE AS CONCERNS THE INFORMATION HEREIN PROVIDED. The information provided herein relates only to the specific product designated and may not be valid where such product is used in combination with any other materials or in any process. Further, since the conditions and methods of use of the product and information referred to herein are beyond the control of Phillips, Phillips expressly disclaims any and all liability as to any results obtained or arising from any use of the product or such information. No statement made herein shall be construed as a permission or recommendation for the use of any product in a manner that might infringe existing patents.

ACROS ORGANICS

HELP CATALOGS SEARCH ORDER LIST CONTENTS

MATERIAL SAFETY DATA SHEET

Phenanthrene, 98+%
96981

**** SECTION 1 - CHEMICAL PRODUCT AND COMPANY IDENTIFICATION ****

MSDS Name: Phenanthrene, 98+%

Company Identification: Acros Organics N.V.
One Reagent Lane
Fairlawn, NJ 07410
For information in North America, call: 800-ACROS-01
For emergencies in the US, call CHEMTREC: 800-424-9300

**** SECTION 2 - COMPOSITION, INFORMATION ON INGREDIENTS ****

CAS#	Chemical Name	%	EINECS#
85-01-8	Phenanthrene	>98.0	201-581-5

Hazard Symbols: T
Risk Phrases: 45

**** SECTION 3 - HAZARDS IDENTIFICATION ****

EMERGENCY OVERVIEW

Appearance: brown.
Caution! May cause respiratory tract irritation. May cause allergic skin reaction. May cause digestive tract irritation. Cancer suspect agent. May cause eye and skin irritation. Powdered material may form explosive dust-air mixtures.
Target Organs: None.

Potential Health Effects

Eye:
May cause eye irritation.

Skin:
May cause skin irritation. May cause photosensitization in certain individuals.

Ingestion:
May cause irritation of the digestive tract.

Inhalation:
Inhalation of dust may cause respiratory tract irritation.

Chronic:
No information found.

**** SECTION 4 - FIRST AID MEASURES ****

Eyes:
Immediately flush eyes with plenty of water for at least 15 minutes, occasionally lifting the upper and lower lids. Get medical aid immediately.

Skin:
Get medical aid. Flush skin with plenty of soap and water for at least 15 minutes while removing contaminated clothing and shoes.

Ingestion:
If victim is conscious and alert, give 2-4 cupfuls of milk or water. Never give anything by mouth to an unconscious person. Get medical aid immediately.

Inhalation:
Remove from exposure to fresh air immediately. If not breathing, give artificial respiration. If breathing is difficult, give oxygen. Get medical aid.

Notes to Physician:
Treat symptomatically and supportively.

**** SECTION 5 - FIRE FIGHTING MEASURES ****

General Information:
As in any fire, wear a self-contained breathing apparatus in pressure-demand, MSHA/NIOSH (approved or equivalent), and full protective gear. Dusts at sufficient concentrations can form explosive mixtures with air. During a fire, irritating and highly toxic gases may be generated by thermal decomposition or combustion.

Extinguishing Media:
Use water spray or dry chemical.

Autoignition Temperature: Not available.
Flash Point: Not available.
(estimated) Health: 1; Flammability: 1; Reactivity: 0
Explosion Limits, Lower: Not available.
Upper: Not available.

**** SECTION 6 - ACCIDENTAL RELEASE MEASURES ****

General Information: Use proper personal protective equipment as indicated in Section 8.

Spills/Leaks:
Sweep up, then place into a suitable container for disposal. Avoid generating dusty conditions. Provide ventilation.

**** SECTION 7 - HANDLING and STORAGE ****

Handling:
Wash thoroughly after handling. Remove contaminated clothing and wash before reuse. Minimize dust generation and accumulation. Avoid contact with eyes, skin, and clothing. Keep container tightly closed. Avoid ingestion and inhalation.

Storage:
Keep container closed when not in use. Store in a tightly closed container. Store in a cool, dry, well-ventilated area away from incompatible substances.

**** SECTION 8 - EXPOSURE CONTROLS, PERSONAL PROTECTION ****

Engineering Controls:
Use adequate ventilation to keep airborne concentrations low.

Exposure Limits

Chemical Name	ACGIH	NIOSH	OSHA - Final PELs
Phenanthrene	as benzene solubles: 0.2 mg/m3 (listed under COAL TAR PITCHES).	none listed	benzene soluble fraction: 0.2 mg/m3 TWA (includes anthracene, BaP, phenanthrene, acridine, chrysene, and pyrene) (listed under COAL TAR PITCHES).

OSHA Vacated PELs:
Phenanthrene:
benzene soluble fraction: 0.2 mg/m3 TWA (anthracene, BaP, phenathrene, acridine, (listed under COAL TAR PITCHES)

Personal Protective Equipment

Eyes:
Wear appropriate protective eyeglasses or chemical safety goggles as described by OSHA's eye and face protection regulations in 29 CFR 1910.133 or European Standard EN166.

Skin:
Wear appropriate protective gloves to prevent skin exposure.

Clothing:
Wear appropriate protective clothing to prevent skin exposure.

Respirators:
Follow the OSHA respirator regulations found in 29CFR 1910.134 or European Standard EN 149. Always use a NIOSH or European Standard EN 149 approved respirator when necessary.

**** SECTION 9 - PHYSICAL AND CHEMICAL PROPERTIES ****

Physical State:	Solid
Appearance:	brown
Odor:	None reported
pH:	Not available.
Vapor Pressure:	1 mm Hg @116c
Vapor Density:	Not available.
Evaporation Rate:	Not available.
Viscosity:	Not available.
Boiling Point:	340 deg C
Freezing/Melting Point:	101 deg C
Decomposition Temperature:	Not available.
Solubility:	insoluble
Specific Gravity/Density:	1.0630g/cm3
Molecular Formula:	C14H10
Molecular Weight:	178.23

**** SECTION 10 - STABILITY AND REACTIVITY ****

Chemical Stability:
Stable under normal temperatures and pressures.
Conditions to Avoid:

Incompatible materials, dust generation, strong oxidants.
Incompatibilities with Other Materials:
Strong oxidizing agents.
Hazardous Decomposition Products:
Carbon monoxide, carbon dioxide.
Hazardous Polymerization: Has not been reported.

**** SECTION 11 - TOXICOLOGICAL INFORMATION ****

RTECS#:
CAS# 85-01-8: SF7175000
LD50/LC50:
CAS# 85-01-8: Oral, mouse: LD50 = 700 mg/kg.
Carcinogenicity:
Phenanthrene -
ACGIH: Benzene solubles: A1-confirmed human carcinogen (listed as
NIOSH: occupational carcinogen (listed as COAL TAR PITCHES)
NTP: Known carcinogen (listed as COAL TAR PITCHES).
OSHA: Select carcinogen (listed as COAL TAR PITCHES).
IARC: Group 3 carcinogen
Epidemiology:
No data available.
Teratogenicity:
No data available.
Reproductive Effects:
No data available.
Neurotoxicity:
No data available.
Mutagenicity:
No data available.
Other Studies:
No data available.

**** SECTION 12 - ECOLOGICAL INFORMATION ****

Ecotoxicity:
Not available.

**** SECTION 13 - DISPOSAL CONSIDERATIONS ****

Dispose of in a manner consistent with federal, state, and local regulations.
RCRA D-Series Maximum Concentration of Contaminants:
None listed.
RCRA D-Series Chronic Toxicity Reference Levels: None
listed.
RCRA F-Series: None listed.
RCRA P-Series: None listed.
RCRA U-Series: None listed.
Not listed as a material banned from land disposal
according to RCRA.

**** SECTION 14 - TRANSPORT INFORMATION ****

US DOT
No information available
IMO
Not regulated as a hazardous material.
IATA
Not regulated as a hazardous material.
RID/ADR
Not regulated as a hazardous material.
Canadian TDG
No information available.

**** SECTION 15 - REGULATORY INFORMATION ****

US FEDERAL

TSCA

CAS# 85-01-8 is listed on the TSCA inventory.

Health & Safety Reporting List

None of the chemicals are on the Health & Safety Reporting List.

Chemical Test Rules

None of the chemicals in this product are under a Chemical Test Rule.

Section 12b

None of the chemicals are listed under TSCA Section 12b.

TSCA Significant New Use Rule

None of the chemicals in this material have a SNUR under TSCA.

SARA

Section 302 (RQ)

CAS# 85-01-8: final RQ = 5000 pounds (2270 kg)

Section 302 (TPQ)

None of the chemicals in this product have a TPQ.

SARA Codes

CAS # 85-01-8: acute.

Section 313

This material contains Phenanthrene (CAS# 85-01-8, 98 0%),which is subject to the reporting requirements of Section 313 of SARA Title III and 40 CFR Part 373.

Clean Air Act:

This material does not contain any hazardous air pollutants.
This material does not contain any Class 1 Ozone depletors.
This material does not contain any Class 2 Ozone depletors.

Clean Water Act:

None of the chemicals in this product are listed as Hazardous Substances under the CWA.
CAS# 85-01-8 is listed as a Priority Pollutant under the Clean Water Act.
None of the chemicals in this product are listed as Toxic Pollutants under the CWA.

OSHA:

None of the chemicals in this product are considered highly hazardous by OSHA.

STATE

Phenanthrene can be found on the following state right to know lists: California, New Jersey, Pennsylvania, Minnesota, (listed as COAL TAR PITCHES), Massachusetts.

California No Significant Risk Level:

None of the chemicals in this product are listed.

European/International Regulations

European Labeling in Accordance with EC Directives

Hazard Symbols: T

Risk Phrases:

R 45 May cause cancer.

Safety Phrases:

S 24/25 Avoid contact with skin and eyes.

WGK (Water Danger/Protection)

CAS# 85-01-8: No information available.

Canada

CAS# 85-01-8 is listed on Canada's DSL/NDSL List.
This product has a WHMIS classification of D2B.
CAS# 85-01-8 is not listed on Canada's Ingredient Disclosure List.

Exposure Limits

CAS# 85-01-8 (listed as coal tar pitches): OEL-UNITED KINGDOM:TWA 0.14 mg/m3 JANUARY 1993. OEL IN BULGARIA, COLOMBIA, JORDAN, KOREA check ACGIH TLV. OEL IN NEW ZEALAND, SINGAPORE, VIETNAM check ACGI TLV

**** SECTION 16 - ADDITIONAL INFORMATION ****

MSDS Creation Date: 2/01/1996 Revision #1 Date: 7/14/1998

The information above is believed to be accurate and represents the best information currently available to us. However, we make no warranty of merchantability or any other warranty, express or implied, with respect to such information, and we assume no liability resulting from its use. Users should make their own investigations to determine the suitability of the information for their particular purposes. In no way shall Fisher be liable for any claims, losses, or damages of any third party or for lost profits or any special, indirect, incidental, consequential or exemplary damages, howsoever arising, even if Fisher has been advised of the possibility of such damages.

Back to product information.

BFGoodrich Kalama, Inc
A BFGoodrich Company

MATERIAL SAFETY DATA SHEET

1296 Third Street N.W. Kalama, WA 98625

Phone: (360) 673-2550 Fax: (360) 673-3564

BFGoodrich Kalama Emergency Phone (360) 673-2550 CHEMTREC (800) 424-9300

I PRODUCT INFORMATION

CHEMICAL NAME:	PHENOL
SYNONYMS:	Carbolic Acid - monohydroxy benzene
FAMILY:	Phenols
MOLECULAR FORMULA:	C_6H_5OH
MOLECULAR WEIGHT:	94.11
CAS REG #:	108-95-2

II SUMMARY OF HAZARDS

DANGER! PHENOL IS A POISON THAT CAUSES SEVERE EYE AND SKIN BURI

LETHAL AMOUNTS OF PHENOL MAY BE ABSORBED THROUGH SI

PHENOL MAY BE FATAL IF SWALLOWED OR INHALED

III PHYSICAL PROPERTIES

APPEARANCE:	Colorless to pale pink crystals or liquid
ODOR:	Characteristic, often referred to as a "hospital smell"
BOILING POINT:	359°F (182°C)
MELTING POINT:	104-106°F (40-41°C)
VAPOR PRESSURE:	0.36 mm Hg @ 68°F (20°C)
SPECIFIC GRAVITY:	1.04 @ 41/4°C (liquid) (H20=1)
WEIGHT PER GALLON:	8.67# @ 105°F (40.6°C)
VAPOR DENSITY:	3.24 (Air=1)
% VOLATILE:	100
EVAPORATION RATE:	<1 (Butyl Acetate=1)
SOLUBILITY IN WATER:	Moderate (8.4 g/100g @ 68°F)

==========

IV *FIRE AND EXPLOSION HAZARD DATA*

FLASH POINT (TCC):	175°F (79°C)
FLAMMABLE LIMITS (in air):	LEL is 1.7%; UEL is 8.6%
AUTOIGNITION TEMP:	1319°F (715°C)
DECOMPOSITION TEMP:	Not determined

FIRE and EXPLOSION HAZARDS: Decomposition under fire conditions will generate carbon monoxide and phenol, and may generate other toxic vapors.

FIRE FIGHTING INFORMATION: Use CO2, foam or dry chemical to extinguish fire. Water fog can be used to cool a fire, but for extinguishment, foam or dry chemical are preferred. Avoid spreading fire by water flooding. Wear self-contained, positive-pressure, breathing apparatus and full fire-fighting protective clothing. Use water to keep containers cool.

==========

V *H.M.I.S./N.F.P.A. HAZARD RATINGS FOR PHENOL*

	H.M.I.S.	N.F.P.A.
HEALTH	3	3
FLAMMABILITY	2	2
REACTIVITY	0	0

==========

VI *HEALTH HAZARD INFORMATION*

LD_{50} (ORAL RAT): 414 mg / kg LD50 (SKN-RAT): 669 mg / kg

LC_{50} (RAT): 316 mg / m3

PERMISSIBLE EXPOSURE LIMIT (PEL): PEL is 5 parts phenol per million parts of air (ppm), averaged over an eight hour work shift. This may also be expressed as 19 milligrams of phenol per cubic meter of air.

CARCINOGEN (IARC / NTP / 29CFR): No

ACUTE HEALTH HAZARDS:

Inhalation: Inhalation of phenol vapors can cause severe lung damage and systemic poisoning.

Eye Contact: Can cause severe eye damage and blindness.

Skin Contact: Does not cause pain but causes a whitening of the exposed area. If not removed promptly, it may cause severe burns and/or systemic poisoning.

Ingestion: May be fatal if swallowed.

CHRONIC HEALTH HAZARDS: Repeated or prolonged exposure to phenol may cause chronic phenol poisoning. The symptoms of chronic phenol poisoning include

vomiting, difficulty in swallowing, diarrhea, lack of appetite, headache, fainting, dizziness,

dark urine, mental disturbances, and possibly a skin rash. Liver damage and discoloration of the skin may occur.

MEDICAL CONDITIONS GENERALLY AGGRAVATED BY EXPOSURE: None

EMERGENCY FIRST AID:

Inhalation: If a person breathes in large amounts of phenol, move the exposed person to fresh air at once. If breathing has stopped, perform artificial respiration. Keep the affected person warm and at rest. Get medical attention immediately.

Eye Contact: If solid or liquid phenol or liquids containing phenol get into the eyes, wash eyes immediately with large amounts of water, lifting the lower and upper lids occasionally. Get medical attention immediately. Contact lenses should not be worn when working with phenol.

Skin Contact: If solid or liquid phenol or liquids containing phenol get on the skin, promptly wash the contaminated skin using soap or mild detergent and water. If solid or liquid phenol or liquids containing phenol penetrate through the clothing, remove the clothing immediately and wash the skin using soap or mild detergent and water. Get medical attention immediately.

Ingestion: When solid or liquid phenol, or liquids containing phenol have been swallowed and the person is conscious, give the person large quantities of water immediately. After the water has been swallowed, try to get the person to vomit by having him touch the back of his throat with his finger. Do not make an unconscious person vomit. Get medical attention immediately.

==========

VII *PROTECTIVE EQUIPMENT AND EXPOSURE CONTROL METHODS*

Employees should be provided with (and required to wear) impervious clothing, gloves, face shields (eight inch minimum), and any other appropriate protective clothing necessary to prevent any possibility of skin contact with solid or liquid phenol or liquids containing phenol. If employee's clothing has had any possibility of being contaminated with solid or liquid phenol or liquids containing phenol, employees should change into uncontaminated clothing before leaving the work premises.

Clothing which has had any possibility of being contaminated with solid or liquid

phenol or liquids containing phenol should be placed in closed containers for storage until it can be discarded or until provision is made for the removal of phenol from the clothing. If the clothing is to be laundered or otherwise cleaned to remove the phenol, the person performing the operation should be informed of phenol's hazardous properties.

Where there is any possibility of exposure of an employees body, and/or eyes, to solid or liquid phenol or liquids containing phenol, facilities for quick drenching of the body and an eyewash fountain (safety shower with eye bath) should be provided within the immediate work area for emergency use.

Employees should be provided with (and required to use) dust and splash- proof safety goggles and full face shield where there is any possibility of solid or liquid phenol or liquids containing phenol contacting the eyes.

Engineering controls, including adequate local exhaust ventilation, should be used to reduce environmental concentrations to the permissible exposure level. If the use of respirators is necessary, use only those approved by N.I.O.S.H. In that case, a complete respiratory program (including training, maintenance, and inspection, etc.) should be instituted.

==========

VIII *REACTIVITY DATA*

STABILITY: Stable HAZARDOUS POLYMERIZATION: Will not occur

INCOMPATIBLE MATERIALS: Contact with strong oxidizing agents (especially calcium hypochlorite) may cause fires and explosions. Hot liquid phenol will attack magnesium, lead, and zinc metals.

HAZARDOUS DECOMPOSITION PRODUCTS: Incomplete combustion will product carbon monoxide and phenol and other potentially toxic and / or poisonous vapors.

==========

IX *SPILL OR LEAK PROCEDURES*

Persons not wearing protective equipment and clothing should be restricted from areas of spills or leaks until cleanup has been completed.

Remove sources of ignition, stop release, and provide adequate ventilation.

Prevent flow to sewer and public waters. Recover free product, if possible. Cover spill with inert, non-combustible absorbent material and remove to a closed disposal container. Report spill as per regulatory requirements.

Leaking drum should be emptied or placed into an oversized (recovery) drum.

==========

X WASTE DISPOSAL

Disposal must be made in accordance with applicable governmental regulations.

Do not contaminate any streams, lakes, or ponds.

==========

XI ADDITIONAL PRECAUTIONS

Store as a NFPA Class III A liquid. Keep fire and sparks away from drums. Since empty containers retain product residue, do not cut, drill, grind, or weld on or near the container until it is thoroughly cleaned.

Isolate, vent, drain, wash and purge systems or equipment before maintenance or repair. Remove all ignition sources. Check atmosphere for flammables and oxygen deficiencies. Use adequate personal protective equipment. Comply with regulations governing confined space entry.

==========

XII OSHA / SARA TITLE III / TSCA INFORMATION

We have evaluated Phenol using the criteria in OSHA's Hazard Communication Regulation (29CFR 1910.1200):

Phenol is considered hazardous under this OSHA Standard.

Phenol is listed as an Extremely Hazardous Substance under Section 302 of SARA Title III.

Phenol is subject to the reporting requirements of Sections 311 or 312 of SARA Title III.

Phenol is on the List of Toxic Chemicals in Section 313 of SARA Title III.

Phenol is included in the current TSCA Inventory List.

==========

THIS INFORMATION IS FURNISHED WITHOUT WARRANTY, REPRESENTATION, INDUCEMENT, OR LICENSE OF ANY KIND, EXCEPT THAT IT IS BELIEVED ACCURATE TO THE BEST OF OUR KNOWLEDGE, OR OBTAINED FROM SOURCES BELIEVED TO BE ACCURATE. BFGOODRICH KALAMA DOES NOT ASSUME ANY LEGAL RESPONSIBILITY FOR USE OR RELIANCE UPON SAME. CUSTOMERS ARE ENCOURAGED TO CONDUCT THEIR OWN TESTS. BEFORE USING ANY CHEMICAL, READ ITS LABEL AND PRODUCT LITERATURE.

Return to BFGoodrich Kalama Product Information Page

Visitors: 000055

6/1/98

MATERIAL SAFETY DATA SHEET (MSDS)

MATERIAL SAFETY DATA SHEET

EM SCIENCE

1. CHEMICAL PRODUCT AND COMPANY IDENTIFICATION

Manufacturer.....:
EM SCIENCE
A Division of EM Industries
P.O. Box 70
480 Democrat Road
Gibbstown, N.J. 08027

Preparation Date.: 8/11/93

Information Phone Number.: 856-423-6300
Hours: Mon. to Fri. 8:30-5
Chemtrec Emergency Number: 800-424-9300
Hours: 24 hrs a day

Catalog Number(s):

821051

Product Name:
Pyrene
Synonyms:
N/A
Chemical Family:
Aromatic
Formula:
$C_{16}H_{10}$
Molecular Weight.:
202.26

2. COMPOSITION / INFORMATION ON INGREDIENTS

Component	CAS #	Appr %
Pyrene	129-00-0	100%

3. HAZARDS IDENTIFICATION

EMERGENCY OVERVIEW
IRRITATING TO SKIN, EYES AND MUCOUS MEMBRANES.
MAY BE HARMFUL IF SWALLOWED.

Appearance:
Colorless-yellowish powder with practically no odor

POTENTIAL HEALTH EFFECTS (ACUTE AND CHRONIC)

Symptoms of Exposure:
May be harmful if swallowed. Irritating on contact with skin, eyes or mucous membranes.

Medical Cond. Aggravated by Exposure:
Data not available.

Routes of Entry:
Inhalation, ingestion

Carcinogenicity:
The material is not listed (IARC, NTP, OSHA) as cancer causing agent.
IARC Cancer Review: Animal, No Evidence

4. FIRST AID MEASURES

Emergency First Aid:
GET MEDICAL ASSISTANCE FOR ALL CASES OF OVEREXPOSURE.
Skin: Immediately flush thoroughly with large amounts of water.
Eyes: Immediately flush thoroughly with water for at least 15 minutes.
Inhalation: Remove to fresh air; give artificial respiration if breathing has stopped.
Ingestion: If conscious, drink water and induce vomiting immediately as directed by medical personnel. Never give anything by mouth to an unconscious person.

5. FIRE FIGHTING MEASURES

Flash Point (F): N/A
Flammable Limits LEL (%): N/A
Flammable Limits UEL (%): N/A
Extinguishing Media:
Water spray jet, CO_2, foam, dry powder

Fire Fighting Procedures:
Wear self-contained breathing apparatus and protective clothing.

Fire & Explosion Hazards:
Thermal decomposition produces toxic fumes.

6. ACCIDENTAL RELEASE MEASURES

Spill Response:
Evacuate the area of all unnecessary personnel. Wear suitable protective equipment listed under Exposure / Personal Protection. Eliminate any ignition sources until the area is determined to be free from explosion or fire hazards. Contain the release and eliminate its source, if this can be done without risk. Take up and containerize for proper disposal as described

under Disposal. Comply with Federal, State, and local regulations on reporting releases. Refer to Regulatory Information for reportable quantity and other regulatory data.

7. HANDLING AND STORAGE

Handling & Storage:
Keep container closed. Store at controlled room temperature. Do not breathe dust or vapor. Do not get in eyes, on skin, or on clothing.

8. EXPOSURE CONTROLS / PERSONAL PROTECTION

ENGINEERING CONTROLS AND PERSONAL PROTECTIVE EQUIPMENT:
Ventilation, Respiratory Protection, Protective Clothing, Eye Protection:
Material should be handled or transferred in an approved fume hood or with adequate ventilation. Protective gloves should be worn to prevent skin contact (Neoprene or equivalent) Safety glasses with side shields should be worn at all times.

Work/Hygenic Practices:
Wash thoroughly after handling. Do not take internally. Eye wash and safety equipment should be readily available.

EXPOSURE GUIDELINES

OSHA - PEL:

	TWA		STEL		CL		
Component	PPM	MG/M3	PPM	MG/M3	PPM	MG/M3	Skin
Pyrene							

ACGIH - TLV:

	TWA		STEL		CL		
Component	PPM	MG/M3	PPM	MG/M3	PPM	MG/M3	Skin
Pyrene							

If there are no exposure limit numbers listed in the Exposure Guidelines chart, this indicates that no OSHA or ACGIH exposure limts have been established.

9. PHYSICAL AND CHEMCIAL PROPERTIES

Boiling Point (C 760 mmHg) : 360C
Melting Point (C) : 150C
Specific Gravity (H_2O = 1) : 1.3
Vapor Pressure (mm Hg) : N/A
Percent Volatile by vol (%): N/A
Vapor Density (Air = 1) : N/A
Evaporation Rate (BuAc = 1): N/A

Solubility in Water (%) : Insoluble
Appearance :
Colorless-yellowish powder with practically no odor

10. STABILITY AND REACTIVITY

Stability: Yes

Hazardous Polymerization:
Does not occur

Hazardous Decomposition:
CO_x

Conditions to Avoid:
None indicated

Materials To Avoid:

```
( ) Water
( ) Acids
( ) Bases
( ) Corrosives
( ) Oxidizers
(X) Other: none indicated
```

11. TOXICOLOGICAL INFORMATION

Toxicity Data

```
orl-mus LD50: 800 mg/kg
```

Toxicological Findings:
Tests on laboratory animals indicate material may produce adverse mutagenic effects and cause tumors.
Cited in Registry of Toxic Effects of Chemical Substances (RTECS)

12. DISPOSAL CONSIDERATIONS

```
EPA Waste Numbers:
```

Treatment:
Material does not have an EPA Waste number and is not a listed waste, however consultation with a permitted waste disposal site (TSD) should be accomplished.
ALWAYS CONTACT A PERMITTED WASTE DISPOSER (TSD) TO ASSURE COMPLIANCE WITH ALL CURRENT LOCAL, STATE AND FEDERAL REGULATIONS.

|13. TRANSPORT INFORMATION

DOT Proper Shipping Name:
Environmentally Hazardous Substance, Solid, n.o.s. (Pyrene)

DOT ID Number :
UN3077

14. REGULATORY INFORMATION

TSCA Statement:
The CAS number of this product is listed on the TSCA Inventory.

Component	SARA EHS (302)	SARA EHS TPQ (lbs)	CERCLA RQ (lbs)
Pyrene	Y	1000/10000	5000

Component	OSHA Floor List	SARA 313	DeMinimis for SARA 313 (%)
Pyrene	Y		

If there is no information listed on the regulatory information chart, this indicates that the chemical is not covered by the specific regulation listed.

15. OTHER INFORMATION

Comments:
None

NFPA Hazard Ratings:

Health : 1
Flammability : 0
Reactivity : 0
Special Hazards :

Revision History: 4/28/88 3/1/91 8/15/91

| = Revised Section

N/A = Not Available

N/E = None Establised

The statements contained herein are offered for informational purposes only and are based upon technical data that EM Science believes to be accurate. It is intended for use only by persons having the necessary technical skill and at their own discretion and risk. Since conditions and manner of use are outside our control, we make NO WARRANTY, EXPRESS OR IMPLIED, OR MERCHANTABILITY, FITNESS OR OTHERWISE.

ACROS ORGANICS

HELP CATALOGS SEARCH ORDER LIST CONTENTS

MATERIAL SAFETY DATA SHEET

Benzo(a)pyrene, 98%
37175

**** SECTION 1 - CHEMICAL PRODUCT AND COMPANY IDENTIFICATION ****

MSDS Name: Benzo(a)pyrene, 98%

3,4-Benzopyrene, 3,4-Benzpyrene
Company Identification: Acros Organics N.V.
One Reagent Lane
Fairlawn, NJ 07410
For information in North America, call: 800-ACROS-01
For emergencies in the US, call CHEMTREC: 800-424-9300

**** SECTION 2 - COMPOSITION, INFORMATION ON INGREDIENTS ****

CAS#	Chemical Name	%	EINECS#
50-32-8	Benzo[a]pyrene, 98%		200-028-5

Hazard Symbols: T
Risk Phrases: 45 46 60 61

**** SECTION 3 - HAZARDS IDENTIFICATION ****

EMERGENCY OVERVIEW

Appearance: slightly brown.
Cancer suspect agent.
Target Organs: None.

Potential Health Effects
The toxicological properties of this material have not been investigated. Use appropriate procedures to prevent opportunities for direct contact with the skin or eyes and to prevent inhalation.

**** SECTION 4 - FIRST AID MEASURES ****

Eyes:
Immediately flush eyes with plenty of water for at least 15 minutes, occasionally lifting the upper and lower lids.
Skin:
Flush skin with plenty of soap and water for at least 15 minutes while removing contaminated clothing and shoes.
Ingestion:
Do NOT induce vomiting. Allow the victim to rinse his mouth and then

to drink 2-4 cupfuls of water, and seek medical advice.

Inhalation:
Remove from exposure to fresh air immediately.

Notes to Physician:
Treat symptomatically and supportively.

**** SECTION 5 - FIRE FIGHTING MEASURES ****

General Information:
As in any fire, wear a self-contained breathing apparatus in pressure-demand, MSHA/NIOSH (approved or equivalent), and full protective gear.

Extinguishing Media:
In case of fire, use water, dry chemical, chemical foam, or alcohol-resistant foam.

Autoignition Temperature: Not available.
Flash Point: Not available.
NFPA Rating: Not published.
Explosion Limits, Lower: Not available.
Upper: Not available.

**** SECTION 6 - ACCIDENTAL RELEASE MEASURES ****

General Information: Use proper personal protective equipment as indicated in Section 8.

Spills/Leaks:
Sweep up, then place into a suitable container for disposal.

**** SECTION 7 - HANDLING and STORAGE ****

Handling:
Not available.

Storage:
Not available.

**** SECTION 8 - EXPOSURE CONTROLS, PERSONAL PROTECTION ****

Engineering Controls:
Use adequate general or local exhaust ventilation to keep airborne concentrations below the permissible exposure limits.

Exposure Limits

Chemical Name	ACGIH	NIOSH	OSHA - Final PELs
Benzo[a]pyrene, 98%	as benzene solubles: 0.2 mg/m3 (listed under COAL TAR PITCHES).	none listed	benzene soluble fraction: 0.2 mg/m3 TWA (includes anthracene, BaP, phenanthrene, acridine, chrysene, and pyrene) (listed under COAL TAR PITCHES).

OSHA Vacated PELs:
Benzo[a]pyrene, 98%:
benzene soluble fraction: 0.2 mg/m3 TWA (anthracene, BaP, phenathrene, acridine, (listed under COAL TAR PITCHES)

Personal Protective Equipment

Eyes:
Wear safety glasses and chemical goggles if splashing is possible.

Skin:
Wear appropriate protective gloves and clothing to prevent skin exposure.

Clothing:
Wear appropriate protective clothing to minimize contact with skin.

Respirators:
Wear a NIOSH/MSHA or European Standard EN 149 approved full-facepiece airline respirator in the positive pressure mode with emergency escape provisions.

**** SECTION 9 - PHYSICAL AND CHEMICAL PROPERTIES ****

Physical State:	Not available.
Appearance:	slightly brown
Odor:	None reported.
pH:	Not available.
Vapor Pressure:	Not available.
Vapor Density:	Not available.
Evaporation Rate:	Not available.
Viscosity:	Not available.
Boiling Point:	495 deg C @ 760.00mm Hg
Freezing/Melting Point:	175 - 177 deg C
Decomposition Temperature:	Not available.
Solubility:	3 mg/l
Specific Gravity/Density:	Not available.
Molecular Formula:	C20H12
Molecular Weight:	252.31

**** SECTION 10 - STABILITY AND REACTIVITY ****

Chemical Stability:
Stable under normal temperatures and pressures.

Conditions to Avoid:
Not available.

Incompatibilities with Other Materials:
Oxidizing agents.

Hazardous Decomposition Products:
Carbon monoxide, carbon dioxide.

Hazardous Polymerization: Has not been reported.

**** SECTION 11 - TOXICOLOGICAL INFORMATION ****

RTECS#:
CAS# 50-32-8: DJ3675000

LD50/LC50:
Not available.

Carcinogenicity:
Benzo[a]pyrene, 98% -
ACGIH: A2-suspected human carcinogen
California: carcinogen - initial date 7/1/87
NIOSH: occupational carcinogen (listed as COAL TAR PITCHES)
NTP: Suspect carcinogen
OSHA: Possible Select carcinogen
IARC: Group 2A carcinogen

**** SECTION 12 - ECOLOGICAL INFORMATION ****

Ecotoxicity:
Not available.

**** SECTION 13 - DISPOSAL CONSIDERATIONS ****

Dispose of in a manner consistent with federal, state, and local regulations.
RCRA D-Series Maximum Concentration of Contaminants:
None listed.
RCRA D-Series Chronic Toxicity Reference Levels: None listed.
RCRA F-Series: None listed.
RCRA P-Series: None listed.
RCRA U-Series: CAS# 50-32-8: waste number U022.
CAS# 50-32-8 is banned from land disposal according to RCRA.

**** SECTION 14 - TRANSPORT INFORMATION ****

US DOT
Shipping Name: TOXIC SOLID, ORGANIC, N.O.S.*
Hazard Class: 6.1
UN Number: 2811
Packing Group: I

IMO
Shipping Name: TOXIC SOLID, ORGANIC, N.O.S.
Hazard Class: 6.1
UN Number: 2811
Packing Group: I

IATA
Shipping Name: TOXIC SOLID, ORGANIC, N.O.S.*
Hazard Class: 6.1
UN Number: 2811
Packing Group: I

RID/ADR
Shipping Name: TOXIC SOLID, ORGANIC, N.O.S.
Dangerous Goods Code: 6.1(25A)
UN Number: 2811

Canadian TDG
No information available.

**** SECTION 15 - REGULATORY INFORMATION ****

US FEDERAL

TSCA
CAS# 50-32-8 is listed on the TSCA inventory.
Health & Safety Reporting List
None of the chemicals are on the Health & Safety Reporting List.
Chemical Test Rules
None of the chemicals in this product are under a Chemical Test Rule.
Section 12b
None of the chemicals are listed under TSCA Section 12b.
TSCA Significant New Use Rule
None of the chemicals in this material have a SNUR under TSCA.

SARA
Section 302 (RQ)
CAS# 50-32-8: final RQ = 1 pound (0.454 kg)
Section 302 (TPQ)
None of the chemicals in this product have a TPQ.
SARA Codes
CAS # 50-32-8: acute, chronic.
Section 313

This chemical is not at a high enough concentration to be reportable under Section 313.
No chemicals are reportable under Section 313.

Clean Air Act:
This material does not contain any hazardous air pollutants.
This material does not contain any Class 1 Ozone depletors.
This material does not contain any Class 2 Ozone depletors.

Clean Water Act:
None of the chemicals in this product are listed as Hazardous Substances under the CWA.
CAS# 50-32-8 is listed as a Priority Pollutant under the Clean Water Act.
None of the chemicals in this product are listed as Toxic Pollutants under the CWA.

OSHA:
None of the chemicals in this product are considered highly hazardous by OSHA.

STATE
Benzo[a]pyrene, 98% can be found on the following state right to know lists: California, New Jersey, Florida, Pennsylvania, Minnesota, Massachusetts.
The following statement(s) is(are) made in order to comply with the California Safe Drinking Water Act:
WARNING: This product contains Benzo[a]pyrene, 98%, a chemical known to the state of California to cause cancer.
California No Significant Risk Level:
CAS# 50-32-8: no significant risk level = 0.06 ug/day

European/International Regulations
European Labeling in Accordance with EC Directives
Hazard Symbols: T
Risk Phrases:
R 45 May cause cancer.
R 46 May cause heritable genetic damages.
R 60 May impair fertility.
R 61 May cause harm to the unborn child.
Safety Phrases:
S 45 In case of accident of if you feel unwell, seek medical advice immediately (show the label where possible).
S 53 Avoid exposure - obtain special instructions before use.

WGK (Water Danger/Protection)
CAS# 50-32-8: No information available.

Canada
CAS# 50-32-8 is listed on Canada's DSL/NDSL List.
This product has a WHMIS classification of D2A.
CAS# 50-32-8 is not listed on Canada's Ingredient Disclosure List.

Exposure Limits
CAS# 50-32-8:. OEL-AUSTRALIA;Carcinogen. OEL-BELGIUM;Carcinogen FINLAND:TWA 0.01 mg/m3;Skin;Carcinogen. OEL-FRANCE;Carcinogen. OEL-GERMANY;Carcinogen. OEL-RUSSIA:STEL 0.00015 mg/m3;Carcinogen. OEL-SWEDEN: TWA 0.005 mg/m3;STEL 0.03 mg/m3;Skin. OEL IN BULGARIA, COLOMBIA, JORDAN, KOREA check ACGIH TLV. OEL IN NEW ZEALAND, SINGAPORE, VIETNAM check ACGI TLV

**** SECTION 16 - ADDITIONAL INFORMATION ****

MSDS Creation Date: 3/01/1994 Revision #2 Date: 9/02/1997

The information above is believed to be accurate and represents the best information currently available to us. However, we make no warranty of merchantability or any other warranty, express or implied, with respect to such information, and we assume no liability resulting from its use. Users

should make their own investigations to determine the suitability of the information for their particular purposes. In no way shall Fisher be liable for any claims, losses, or damages of any third party or for lost profits or any special, indirect, incidental, consequential or exemplary damages, howsoever arising, even if Fisher has been advised of the possibility of such damages.

Back to product information.

ACROS ORGANICS

HELP CATALOGS SEARCH ORDER LIST CONTENTS

MATERIAL SAFETY DATA SHEET

Dibenzáa,h_anthracene, 99% (uv-vis)
66416

**** SECTION 1 - CHEMICAL PRODUCT AND COMPANY IDENTIFICATION ****

MSDS Name: Dibenzáa,h_anthracene, 99% (uv-vis)

```
Company Identification:  Acros Organics N.V.
                         One Reagent Lane
                         Fairlawn, NJ  07410
For information in North America, call:   800-ACROS-01
For emergencies in the US, call CHEMTREC: 800-424-9300
```

**** SECTION 2 - COMPOSITION, INFORMATION ON INGREDIENTS ****

CAS#	Chemical Name	%	EINECS#
53-70-3	Dibenz(a,h)anthracene		200-181-8

Hazard Symbols: T
Risk Phrases: 23/24/25 45

**** SECTION 3 - HAZARDS IDENTIFICATION ****

EMERGENCY OVERVIEW

Not available.
Appearance: Not available.
Not available.
Target Organs: None.

Potential Health Effects

The toxicological properties of this material have not been investigated. Use appropriate procedures to prevent opportunities for direct contact with the skin or eyes and to prevent inhalation.

**** SECTION 4 - FIRST AID MEASURES ****

Eyes:

Flush eyes with plenty of water for at least 15 minutes, occasionally lifting the upper and lower lids. Get medical aid immediately.

Skin:

Get medical aid. Flush skin with plenty of soap and water for at least 15 minutes while removing contaminated clothing and shoes. Remove contaminated clothing and shoes.

Ingestion:
If victim is conscious and alert, give 2-4 cupfuls of milk or water. Get medical aid immediately.

Inhalation:
Get medical aid immediately. Remove from exposure to fresh air immediately. If not breathing, give artificial respiration. If breathing is difficult, give oxygen.

Notes to Physician:
Treat symptomatically and supportively.

**** SECTION 5 - FIRE FIGHTING MEASURES ****

General Information:
As in any fire, wear a self-contained breathing apparatus in pressure-demand, MSHA/NIOSH (approved or equivalent), and full protective gear. During a fire, irritating and highly toxic gases may be generated by thermal decomposition or combustion.

Extinguishing Media:
Use agent most appropriate to extinguish fire.

Autoignition Temperature: Not available.
Flash Point: Not available.
NFPA Rating: Not published.
Explosion Limits, Lower: Not available.
Upper: Not available.

**** SECTION 6 - ACCIDENTAL RELEASE MEASURES ****

General Information: Use proper personal protective equipment as indicated in Section 8.

Spills/Leaks:
Clean up spills immediately, observing precautions in the Protective Equipment section.

**** SECTION 7 - HANDLING and STORAGE ****

Handling:
Wash thoroughly after handling. Remove contaminated clothing and wash before reuse. Avoid contact with eyes, skin, and clothing. Avoid ingestion and inhalation.

Storage:
Store in a cool, dry place. Keep container closed when not in use.

**** SECTION 8 - EXPOSURE CONTROLS, PERSONAL PROTECTION ****

Engineering Controls:
Use process enclosure, local exhaust ventilation, or other engineering controls to control airborne levels.

Exposure Limits

Chemical Name	ACGIH	NIOSH	OSHA - Final PELs
Dibenz(a,h)anthracene	none listed	none listed	none listed

OSHA Vacated PELs:
Dibenz(a,h)anthracene:
No OSHA Vacated PELs are listed for this chemical.

Personal Protective Equipment

Eyes:

Wear chemical goggles.

Skin:

Wear appropriate protective gloves to prevent skin exposure.

Clothing:

Wear appropriate protective clothing to minimize contact with skin.

Respirators:

A respiratory protection program that meets OSHA's 29 CFR ¦1910.134 and ANSI Z88.2 requirements or European Standard EN 149 must be followed whenever workplace conditions warrant a respirator's use.

**** SECTION 9 - PHYSICAL AND CHEMICAL PROPERTIES ****

Physical State:	Not available.
Appearance:	Not available.
Odor:	Not available.
pH:	Not available.
Vapor Pressure:	Not available.
Vapor Density:	Not available.
Evaporation Rate:	Not available.
Viscosity:	Not available.
Boiling Point:	Not available.
Freezing/Melting Point:	265 deg C
Decomposition Temperature:	Not available.
Solubility:	Not available.
Specific Gravity/Density:	Not available.
Molecular Formula:	C22H14
Molecular Weight:	278.34

**** SECTION 10 - STABILITY AND REACTIVITY ****

Chemical Stability:
Stable under normal temperatures and pressures.
Conditions to Avoid:
Incompatible materials, strong oxidants.
Incompatibilities with Other Materials:
Not available.
Hazardous Decomposition Products:
Irritating and toxic fumes and gases.
Hazardous Polymerization: Not available.

**** SECTION 11 - TOXICOLOGICAL INFORMATION ****

RTECS#:
CAS# 53-70-3: HN2625000
LD50/LC50:
Not available.
Carcinogenicity:
Dibenz(a,h)anthracene -
California: carcinogen - initial date 1/1/88
NTP: Suspect carcinogen
OSHA: Possible Select carcinogen
IARC: Group 2A carcinogen

**** SECTION 12 - ECOLOGICAL INFORMATION ****

**** SECTION 13 - DISPOSAL CONSIDERATIONS ****

Dispose of in a manner consistent with federal, state, and local regulations.
RCRA D-Series Maximum Concentration of Contaminants:

None listed.
RCRA D-Series Chronic Toxicity Reference Levels: None listed.
RCRA F-Series: None listed.
RCRA P-Series: None listed.
RCRA U-Series: CAS# 53-70-3: waste number U063.
CAS# 53-70-3 is banned from land disposal according to RCRA.

**** SECTION 14 - TRANSPORT INFORMATION ****

US DOT
Shipping Name: DYE INTERMEDIATE, SOLID, TOXIC, N.O.S.*
Hazard Class: 6.1
UN Number: 3143
Packing Group: II

IMO
Shipping Name: DYE INTERMEDIATE, SOLID, TOXIC, N.O.S.
Hazard Class: 6.1
UN Number: 3143
Packing Group: II

IATA
Shipping Name: DYE INTERMEDIATE, SOLID, TOXIC, N.O.S.*
Hazard Class: 6.1
UN Number: 3143
Packing Group: II

RID/ADR
Shipping Name: DYE INTERMEDIATE, SOLID, TOXIC, N.O.S.
Dangerous Goods Code: 6.1(25B)
UN Number: 3143

Canadian TDG
No information available.

**** SECTION 15 - REGULATORY INFORMATION ****

US FEDERAL

TSCA
CAS# 53-70-3 is listed on the TSCA inventory.
Health & Safety Reporting List
None of the chemicals are on the Health & Safety Reporting List.
Chemical Test Rules
None of the chemicals in this product are under a Chemical Test Rule.
Section 12b
None of the chemicals are listed under TSCA Section 12b.
TSCA Significant New Use Rule
None of the chemicals in this material have a SNUR under TSCA.

SARA
Section 302 (RQ)
CAS# 53-70-3: final RQ = 1 pound (0.454 kg)
Section 302 (TPQ)
None of the chemicals in this product have a TPQ.
Section 313
This chemical is not at a high enough concentration to be reportable under Section 313.
No chemicals are reportable under Section 313.

Clean Air Act:
This material does not contain any hazardous air pollutants.
This material does not contain any Class 1 Ozone depletors.
This material does not contain any Class 2 Ozone depletors.

Clean Water Act:
None of the chemicals in this product are listed as Hazardous Substances under the CWA.
CAS# 53-70-3 is listed as a Priority Pollutant under the Clean Water

Act.
None of the chemicals in this product are listed as Toxic Pollutants under the CWA.

OSHA:
None of the chemicals in this product are considered highly hazardous by OSHA.

STATE
Dibenz(a,h)anthracene can be found on the following state right to know lists: California, New Jersey, Florida, Pennsylvania, Minnesota, Massachusetts.
The following statement(s) is(are) made in order to comply with the California Safe Drinking Water Act:
WARNING: This product contains Dibenz(a,h)anthracene, a chemical known to the state of California to cause cancer.
California No Significant Risk Level:
CAS# 53-70-3: no significant risk level = 0.2 ug/day

European/International Regulations
European Labeling in Accordance with EC Directives
Hazard Symbols: T
Risk Phrases:
R 23/24/25 Toxic by inhalation, in contact with skin and if swallowed.
R 45 May cause cancer.
Safety Phrases:
S 36/39 Wear suitable protective clothing and eye/face protection.
S 53 Avoid exposure - obtain special instructions before use.

WGK (Water Danger/Protection)
CAS# 53-70-3: No information available.

Canada
None of the chemicals in this product are listed on the DSL/NDSL list.
WHMIS: Not available.
CAS# 53-70-3 is not listed on Canada's Ingredient Disclosure List.

Exposure Limits
CAS# 53-70-3:. OEL-FRANCE;Carcinogen. OEL-GERMANY;Carcinogen

**** SECTION 16 - ADDITIONAL INFORMATION ****

MSDS Creation Date: 2/28/1995 Revision #2 Date: 4/05/1997

The information above is believed to be accurate and represents the best information currently available to us. However, we make no warranty of merchantability or any other warranty, express or implied, with respect to such information, and we assume no liability resulting from its use. Users should make their own investigations to determine the suitability of the information for their particular purposes. In no way shall Fisher be liable for any claims, losses, or damages of any third party or for lost profits or any special, indirect, incidental, consequential or exemplary damages, howsoever arising, even if Fisher has been advised of the possibility of such damages.

Back to product information.

EXHIBIT D
HNU Operation, Maintenance and Calibration Procedures

PHOTOIONIZATION DETECTOR (PID)
TABLE OF CONTENTS

1.0 PURPOSE

2.0 SCOPE

3.0 DEFINITIONS

4.0 RESPONSIBILITIES

5.0 PROCEDURES

- 5.1 Calibration
- 5.2 Operation
- 5.3 Interferences and Potential Problems
- 5.4 Maintenance

6.0 QUALITY ASSURANCE RECORDS

7.0 REFERENCES

PHOTOIONIZATION DETECTOR (PID)
HNu MODEL PI 101 and DL 101

1.0 PURPOSE

The purpose of this SOP is to provide general reference information using the HNu Model PI 101 or DL 101 photoionization detector (PID), or an equivalent or similar instrument, in the field. Calibration and operation, along with field maintenance will be included in this SOP.

2.0 SCOPE

This procedure provides information on the field operation and general maintenance of the HNu (PID). Application of the information contained herein will ensure that this type of field monitoring equipment will be used properly. Review of the manufacturer's instruction manual is necessary for more complete information.

These procedures refer only to monitoring for health and safety. The methods are not directly applicable to surveillance of air quality for analytical purposes.

3.0 DEFINITIONS

Ionization Potential - In this case, a numeric equivalent that expresses the amount of energy needed to replace an electron with a photon. This energy is further defined of electron volts (eV).

PID - Photoionization Detector

ppm - parts per million: parts of vapor or gas per million parts of air by volume.

4.0 RESPONSIBILITIES

Project Manager - The Project Manager is responsible for ensuring that project-specific plans are in accordance with these procedures, where applicable, or that other approved procedures are developed. The Project Manager is responsible for selecting qualified individuals for the monitoring activities.

Project Health and Safety Officer (PHSO) - The Project Health and Safety Officer is responsible for developing a site-specific Health and Safety Plan (HASP) which specifies air monitoring requirements.

Field Team Leader - It is the responsibility of the Field Team Leader to implement these procedures in the field, and to ensure that the Field Investigation Personnel performing air monitoring activities, have been briefed and trained to execute these procedures before the start of site operations.

On-Site Health and Safety Officer (OSHSO) - The OSHSO is responsible for ensuring that the specified air monitoring equipment is on site, calibrated, and used correctly by the Field Personnel. The SHSO will coordinate these activities with the Field Team Leader.

Field Investigation Personnel - It is the responsibility of the Field Investigation Personnel to follow these procedures or to follow documented project-specific procedures as directed by the Field Team Leader/Site Health and Safety Officer. The Field Investigation Personnel are responsible for documenting all air monitoring results in both the Field Logbook and the daily Realtime Air Monitoring Log during each field investigation.

5.0 PROCEDURES

The HNu utilizes the principle of photoionization whereby contaminant molecules enter the ion chamber and electrons are displaced by ultraviolet photons producing positive ions. These displaced positive ions are in turn collected on a special electrode. As the positive ions collect on the electrode, they create an electrical current which is amplified and displayed on the meter as a concentration in parts per million (ppm).

The HNu is only effective for contaminants that have ionization potentials (IP) of less than or equal to the electron volt (eV) capacity of the lamp (i.e., methane, having an IP of 12.98 eV, will not be detected at a lamp potential of 11.7 eV). The standard lamp is 10.2 eV with optional lamps of 9.5eV and 11.7eV, respectively. For the PI 101, the span settings should be as follows: 1.0 for 9.5 eV lamps; 9.8 for 10.2 eV lamps; and 5.0 for 11.7 eV lamps. During calibration, these span settings will be adjusted as necessary, using the span control knob.

The following subsections will discuss HNu calibration, operation, and maintenance. These sections, however, should not be used as a substitute for the manufacturer's instruction manual.

5.1 Calibration

For calibration purposes, the following items will bee needed:

- *Gas cylinder containing 95 to 100 parts per million (ppm) of isobutylene, balance in air
- A 0.30 liters per minute regulator
- Connector tubing
- Screwdriver set
- Calibration Gas Humidifier (for high humidity environments)
- Photoionization Detector (PID) Calibration Form (provided in Exhibit C)

*Note: Do not rely on accuracy of rated concentration when cylinder content drops to <200 psi.

Prior to each use, make sure that the battery is fully charged, the ultraviolet lamp is working, and that the fan is operating and drawing air into the probe (fan operates at approximately 100 cc/minute). Procedures for completing these preliminary activities are given in the manufacturer's instruction manual.

PI 101

To calibrate the HNu PI 101, the steps provided below should be followed. For an itemized description of the calibration process, refer to Section 3-5 in the manufacturer's instruction manual.

- Turn the function control switch to the standby position and zero the instrument by turning the zero adjustment knob to align the indicator needle with zero on the readout meter.

- Set the range on the HNu and allow the instrument to warm up a few minutes before calibrating. Choices for range are 0-20, 0-200, and 0-2,000 ppm, respectively. Range

choice must take into account the concentration of the calibration gas. If you have to zero the instrument in the desired range, record background if present.

- Calibrate the HNu PID to benzene equivalents using a concentration of 100 ppm isobutylene as the calibration gas. For example, if you are using the 10.2 eV probe, your range should be set on the 0-200 scale, and calibrated to 56 ppm (i.e., adjust span so that the instrument reads 56 units with 100 ppm isobutylene connected). Using the 11.7 e V probe the PID should read 65 units with 100 ppm of isobutylene.

- Attach tubing to the regulate (use the Calibration Gas Humidifier in high humidity environments).

- Attach the free end of the tubing to the probe and turn on the calibration gas.

- If the reading on the meter is not ±5 percent of the concentration of the calibration gas, adjust the span setting knob until the meter reads accordingly. If after adjusting the span setting knob the readout meter is still not responding, refer to the manufacturer's instruction manual. Also, when the HNu is calibrated it should respond to a minimum of 90 percent of the concentration of the calibration gas within three seconds after introduction of that gas. If proper calibration cannot be obtained, internal calibration may be required. Note, only qualified personnel should perform internal calibrations.

- Record the calibration on the "Photoionization Detector (PID) Calibration Form".

DL 101

To calibrate the HNu DL 101, the steps provided below should be followed. For an itemized description of the calibration process, refer to Section 4.4 in the manufacturer's instruction manual.

- Press and release the POWER button on the keypad and wait for the screen to stabilize, then press the CALIBRATE key until "Calibrate?" appears. At this point press the ENTER key until "Elec_Zero? Yes" appears on the screen in which case you will press the ENTER key, again, to confirm the electronic zero.

- The display will now read "CE/ENT/EXIT Conc = ___ ppm" which requires the concentration of the calibration gas (noted on the side of the calibration gas bottle) to be entered on the keypad. The display will prompt you to "Attach gas to probe and /ENTER/" so attach tubing to probe (use the calibration gas humidifier in high humidity environments), open valve, and press the ENTER key. Press ENTER again when "Press ENTER when Ready: xxx ppm" appears on screen. This will cause "Calibrating...Please Wait" to appear on screen.

Note: This calibration is effective when the instrument is in the Survey Mode, which is the default mode. For calibrations other than the one described, or if proper calibration cannot be obtained, refer to the manufacturer's instruction manual.

- For calibrations using an alternate gas or span values, refer to Section 4.5 of the manufacturer's instruction manual.
- Record the calibration on the "Photoionization Detector (PID) Calibration Form" which accompanies each HNu.

5.2 Operation

PI 101

Note: IMPORTANT - The HNu should be "zeroed" in a fresh air environment if at all possible. If there is a background concentration, it must be documented and then zeroed out.

- Prior to each use of the HNu, check that the battery is fully charged by turning the dial to BATT and making sure that it is within range. Also make sure that the ultraviolet lamp and the fan are working properly.

- Select your desired range. HNu ranges consists of a 0-20, 0-200, and 0-2,000 ppm, respectively. Consult with the Field Team Leader for more information when choosing the appropriate range, however, in most instances the range will be set initially at 0-20.

- When HNu is used intermittently, turn knob to STANDBY to help in extending the life of the UV lamp when operating in a low humidity environment. Otherwise, leave the knob set to the range desired so that the UV lamp will "burn off" any accumulated moisture.

Note: When using the PI 101 HNu, make sure that the probe does not contact water or soil during sampling. This will cause erroneous readings and will possibly damage the instrument.

DL 101

The DL 101 is designed to default to the survey mode when initially powered up, therefore once the calibration has been completed, the instrument is ready to go. Within the survey mode several options are available, briefly these options include:

(1) The Site Function

The Site function assigns a number to a site that is being analyzed. Press the Site Key on the keypad to enter a specific site number, or press the gray button on the rear of the probe to increment a site number.

(2) Logging Data

The Log function stores data in memory. To log data, press the Log key on the keypad or the Log button on the back of the probe. "Log" will appear in the upper right corner of the display when activated and disappears when not activated. To turn logging off, press either the Log key on the keypad or the red Log button on the rear of the probe.

- The DL 101 allows for the interchanging of different voltage lamps, however, refer to the manufacturer's instructions before attempting to change the lamp.

- The DL 101 also offers three other modes of operation, the Hazardous Waste Mode, the Industrial Hygiene Mode, and the Leak Detection Mode. Each of these modes increases the range of capabilities for this instrument which is covered in detail in the manufacturer's instruction manual.

Note: When using the DL 101 HNu, make sure that the probe does not contract water or soil during sampling. This will cause erroneous readings and will possibly damage the instrument.

5.3 Interferences and Potential Problems

A number of factors can affect the response of the PI 101 HNu and DL 101 HNu.

- High humidity can cause lamp fogging and decreased sensitivity. This can be significant when soil moisture levels are high, or when monitoring a soil gas well that is accessible to groundwater.

- High concentrations of methane can cause a downscale deflection of the meter.

- High and low temperature, electrical fields, FM radio transmission, and naturally occurring compounds, such as terpines in wooded areas, will also affect instrument response.

5.4 Maintenance

The best way to keep an HNu operating properly is to keep it as clean as possible. HNu's should be decontaminated and wiped down after each use.

Corrective Maintenance

- The ultraviolet lamp should be periodically cleaned using a special compound supplied by HNu Systems, Inc. for the 10.2 eV lamp, and a chlorinated solvent such as 1,1,1-trichloroethane for the 11.7eV lamp. Consult the manufacturer's instruction manual for specific cleaning instructions.

- The ionization chamber can be periodically cleaned with methyl alcohol and a swab.

Note: UV lamp and ion chamber cleaning is accomplished by following the procedures outlined in Section 5.2, however, this should only be performed by trained personnel.

- Documenting the HNu's observed symptoms and then referring to the manufacturer's instruction manual section on troubleshooting (Section 6.0) also can be employed. If this does not work, the Field Team Leader should be consulted for an appropriate course of action.

Repair and Warranty Repair - HNu's have different warranties for different parts, so documenting the problem and sending it into the manufacturer assists in expediting repair time and obtaining appropriate warranty service.

6.0 QUALITY ASSURANCE RECORDS

Quality assurance records will be maintained for each air monitoring event. The following information shall be recorded in the Field Logbook and the daily Realtime Air Monitoring Logs that accompany the HNu.

- Identification - Site name, location, CTO number, activity monitored, (surface water sampling, soil sampling, etc.) serial number, time, resulting concentration, comments and identity of air monitoring personnel.

- Field observations - Appearance of sampled medial (if definable).

- Additional remarks (e.g., the HNu meter had wide range fluctuations during air monitoring activities).

7.0 REFERENCES

HNu Systems, Inc. Instruction Manual. Model PI 101, 1986.

HNu Systems, Inc. Operator's Manual. Model DL 101, 1991.

EXHIBIT E
Health and Safety Records

DECLARATION OF HEALTH AND SAFETY PLAN REVIEW

All site personnel indicated below have reviewed and are familiar with this Health and Safety Plan for the Essex facility.

1. _____ _____
(Name-Print) (Company)

_____ _____
(Name-Sign) (Date/Time)

2. _____ _____
(Name-Print) (Company)

_____ _____
(Name-Sign) (Date/Time)

3. _____ _____
(Name-Print) (Company)

_____ _____
(Name-Sign) (Date/Time)

4. _____ _____
(Name-Print) (Company)

_____ _____
(Name-Sign) (Date/Time)

5. _____ _____
(Name-Print) (Company)

_____ _____
(Name-Sign) (Date/Time)

6. _____ _____
(Name-Print) (Company)

_____ _____
(Name-Sign) (Date/Time)

DECLARATION OF HEALTH AND SAFETY PLAN REVIEW

All site personnel indicated below have reviewed and are familiar with this Health and Safety Plan for the Essex facility.

1. _____ _____
(Name-Print) (Company)

_____ _____
(Name-Sign) (Date/Time)

2. _____ _____
(Name-Print) (Company)

_____ _____
(Name-Sign) (Date/Time)

3. _____ _____
(Name-Print) (Company)

_____ _____
(Name-Sign) (Date/Time)

4. _____ _____
(Name-Print) (Company)

_____ _____
(Name-Sign) (Date/Time)

5. _____ _____
(Name-Print) (Company)

_____ _____
(Name-Sign) (Date/Time)

6. _____ _____
(Name-Print) (Company)

_____ _____
(Name-Sign) (Date/Time)

Environmental Construction Company

Griffith, Indiana

This is to certify that

James Peyton

Has successfully completed the requirements for the Program
and is hereby awarded the Certificate in
Hazwoper General Site Worker Refresher
29 CFR 1910.120 (e) (8)
40 Hour

In recognition thereof, this certificate is awarded

March 13, 1995

Bernard G. Vance, CHT
93118 exp. 12/96
Director of Training

OHM Corporation

CERTIFICATE OF COMPLETION

This is to certify that

RICK SPITALER

Has successfully completed the following training:

OSHA 40-HR. HAZARDOUS WASTE WORKER TRAINING
29 CFR 1910.120(E)

Date: September 28 - October 2, 1992

D Jack Hering

Manager, Training & Development

Certificate of Training

Lakisha Arif-Holmes

Participant #200S12
has successfully completed

Hazardous Waste Worker

Emergency Response Technician

40 Hour Training
29 CFR 1910.120(e) & (q)(6)(iii)

BCSP
THOMAS N. COOPER
9260
CERTIFIED SAFETY PROFESSIONAL

Purdue University
Department of Agronomy
Natural Resources
and Environmental Science Program
May 5, 2001

Thomas N. Cooper C.S.P

CHEMICAL SAFETY ASSOCIATES, INC.

C S A

presents this certificate to

THOMAS P. NOBLE

for successfully completing

EMERGENCY RESPONDER — 40 HOUR TRAINING

Neal Langerman
Instructor

March 26, April 23-24, May 17-18, 1990
Training Date

Neal Langerman
President

Eli Pushuck
Instructor

EXHIBIT F

Medical Surveillance Testing Parameters

MEDICAL SURVEILLANCE TESTING PARAMETERS

Complete medical and work histories
Physical examination
Eye examination and visual acuity
EKG (for individuals over 30 years old)
CBC with differential
Chest X-ray (biannual)
Pulmonary Function Tests (FVC and FEV_1)
SMA 20 or 24 (liver enzyme scan)
Audiogram
Urinalysis (glucose scan)

The pre-assignment and annual physical examinations will categorize employees as fit-for-duty and able to wear respiratory protection. The SHSO will compile medical certificates (not results of medical surveillance examinations) as part of the project health and safety records.

All personnel working in contaminated or potentially contaminated work zones will have "passed" a medical examination within the past 12 months. Personnel whose medical certifications expire during the project must pass a medical examination and present a medical certificate to the SHSO before being allowed to work in contaminated or potentially contaminated work zones.

EXHIBIT G
Standard Operating Procedures for Personal Protective Equipment

STANDARD OPERATING PROCEDURES
FOR
PERSONAL PROTECTIVE EQUIPMENT

Inspection

Proper inspection of personal protective equipment (PPE) features several sequences of inspection depending on articles of PPE and it's frequency of use as follows:

- Inspection and operational testing of PPE received from the factory or distributor.
- Inspection of PPE as it is issued to workers.
- Inspection after use or training, and prior to maintenance.
- Periodic inspection of stored equipment.
- Periodic inspection when a question arises concerning the appropriateness of the selected equipment, or when problems with similar equipment arise.

The primary inspection of PPE in use for activities at the site will occur prior to immediate use, will be conducted by the user to ensure that the specific device or article has been checked-out by the user, and that the user is familiar with its use.

Inspection Checklists

For protective clothing before use:

- Determine that the clothing material is correct for the specified task.
- Visually inspect for imperfect seams, non-uniform coating, tears, and malfunctioning closures.
- Hold up to light and check for pinholes.

- Flex the product and observe for cracks or other signs of deterioration.

- If product has been used previously, inspect inside and out for signs of chemical attack (discoloration, swelling, stiffness).

For protective clothing during work:

- Evidence of chemical attack such as discoloration, swelling, stiffening, and softening (chemical permeation can occur without physical signs)
- Closure failure
- Tears
- Punctures
- Seam discontinuities

Visually inspect gloves before use:

- Imperfect seams
- Tears
- Non-uniform coating
- Pressurize glove with air; listen for pinhole leaks

EXHIBIT H
Supervisor's Accident Report Form

SUPERVISOR'S ACCIDENT REPORT FORM

Baker

Name of Injured employee: _____

Job Title: _____ Dept.: _____

Date of Injury: _____ Exact Location: _____

Date of Birth: _____ Date of Hire: _____

Where did the accident or injury occur? _____

At what time did it occur? _____ a.m. p.m

Describe the injury in detail: _____

_____

_____

Will the injury cause loss of time? YES NO

When is the employee expected to return to work? _____

Any pre-existing physical disabilities? _____

Please indicate the injured area, the nature of the injury and the action taken:

☐ Head	☐ Hands	☐ Wounds	☐ Amputation	☐ 1st Aid Only	☐ Injured Sent:
☐ Eyes	☐ Fingers	☐ Strain & Sprain	☐ Burns	☐ Medical Only	☐ Home
☐ Trunk	☐ Legs	☐ Contusion	☐ Foreign Body	☐ Lost Time	☐ Dr. _____
☐ Arms	☐ Feet	☐ Fracture	☐ Skin (Occupational)	☐ Alleged	☐ Hosp. _____

Please indicate (x) all those that apply:

BASIC CAUSE:

- ☐ Operating Equipment Without Authority
- ☐ Environmental conditions (terrain,weather,etc.)
- ☐ Unsafe Equipment/Using Equipment Unsafely
- ☐ Unsafely Loading, Placing, Clearing brush
- ☐ Working on Moving or Dangerous Equipment
- ☐ Distraction, Teasing, Horse Play
- ☐ Failure to Use Personal Protective Devices
- ☐ Other (Explain)

CONTRIBUTING CAUSE, IF ANY

- ☐ Unguarded or Equipment Guards Absent
- ☐ Defective Tools, Equipment or Substance
- ☐ Unsafe Design or Construction of equipment
- ☐ Hazardous Conditions
- ☐ Unsafe Illumination
- ☐ Unsafe Ventilation
- ☐ Unsafe Clothing
- ☐ Other (Explain)

Describe accident in detail (use separate sheet of paper and include comments by eyewitnesses, injured employees, etc.) _____

_____

SUPERVISOR'S GUIDE TO CORRECTIVE ACTION :

UNSAFE ACT	UNSAFE CONDITION
Stop future incidents	Remove
Study the Job	Post Warning Signs
Provide Safety/Equipment Training	Advise Supervisor
Follow - up/Enforce	Advise Others (maintenance, Project Manager)

Describe the corrective action you will be taking: _____

_____

Supervisor's Signature: _____

Job Title: _____ Date: _____

EMPLOYER'S REPORT OF INJURY / ILLNESS OF EMPLOYEE

State Form 34401 (R3 / 7-88)

Return to: Indiana Worker's Compensation Board
Room 601 State Office Building
100 North Senate Avenue
Indianapolis, Indiana 46204

FOR STATE USE ONLY	IOSHA Case / File No.

NOTE: This form is to be completed and submitted to the Worker's Compensation Board within 7 days of knowledge of occurrence.

* *PRIVACY NOTICE: This agency is requesting disclosure of employee's social security number in accordance with IC 23-3-4-13.*

S Use ONLY: County, Date, Occ., Ind., Own., Nature, Part, Type, Source, Age, Sex, Ios, fs, Year, cd, Bypass

(Please Type or Print)

EMPLOYEE INFORMATION

Name	Social Security Number

Address *(Street, number, city and state)*	ZIP Code

Telephone Number	Sex	Date of Birth	Reg. Dept.	Date Hired
( )	☐ Male ☐ Female			

Occupation	Hours worked per day	Days worked per week	Wages per hour	Avg. weekly earnings

TIME AND PLACE

Date of injury / exposure	Time	Exact address of incident *(include county if in Indiana)*
	☐ AM ☐ PM	

Was this employer's premises?	Number of lost work days to date	Has the employee returned to work?	If yes, what date?
☐ Yes ☐ No			

EMPLOYER INFORMATION

Name	Federal Identification Number

Address *(Street, number, city, county and state)*	Telephone Number
	( )
	ZIP Code
Actual Location *(Street, number, city, county and state)*	
	ZIP Code

INCIDENT INFORMATION

Nature of injury *(what kind of injury; bruise, cut, sprain, etc.)*

Part of body affected *(specific part of the body; wrist, forearm, toes, etc.)*

Describe fully how accident / exposure occurred *(be specific as to tools or material being handled; what the employee was doing; how accident occurred)*:

Has employee died?	Date of Death	Employee hospitalized?
☐ Yes ☐ No		☐ Yes ☐ No

Name of Physician	Address
Name of Hospital, if applicable	Address
Name of Insurance Carrier	Address

Signature	Title	Date Report Signed

EMPLOYER'S REPORT OF INJURY / ILLNESS OF EMPLOYEE

State Form 34401 (R3 / 7-88)

Return to: Indiana Worker's Compensation Board
Room 601 State Office Building
100 North Senate Avenue
Indianapolis, Indiana 46204

FOR STATE USE ONLY	IOSHA Case / File No.

NOTE: This form is to be completed and submitted to the Worker's Compensation Board within 7 days of knowledge of occurrence.

* *PRIVACY NOTICE: This agency is requesting disclosure of employee's social security number in accordance with IC 23-3-4-13.*

STATE USE ONLY: County, Date, Occ., Ind., Own., Nature, Part, Type, Source, Age, Sex, Ios, ts, Year, cd, Bypass

(Please Type or Print)

EMPLOYEE INFORMATION

Name	Social Security Number

Address *(Street, number, city and state)*	ZIP Code

Telephone Number	Sex	Date of Birth	Reg. Dept.	Date Hired
( )	☐ Male ☐ Female			

Occupation	Hours worked per day	Days worked per week	Wages per hour	Avg. weekly earnings

TIME AND PLACE

Date of Injury / exposure	Time	Exact address of incident *(include county if in Indiana)*
	☐ AM ☐ PM	

Was this employer's premises?	Number of lost work days to date	Has the employee returned to work?	If yes, what date?
☐ Yes ☐ No			

EMPLOYER INFORMATION

Name	Federal Identification Number

Address *(Street, number, city, county and state)*	Telephone Number
	( )

	ZIP Code

Actual Location *(Street, number, city, county and state)*

	ZIP Code

INCIDENT INFORMATION

Nature of Injury *(what kind of injury; bruise, cut, sprain, etc.)*

Part of body affected *(specific part of the body; wrist, forearm, toes, etc.)*

Describe fully how accident / exposure occurred *(be specific as to tools or material being handled; what the employee was doing; how accident occurred)*:

Has employee died?	Date of Death	Employee hospitalized?
☐ Yes ☐ No		☐ Yes ☐ No

Name of Physician	Address
Name of Hospital, if applicable	Address
Name of Insurance Carrier	Address

Signature	Title	Date Report Signed

SUPERVISOR'S ACCIDENT REPORT FORM

Baker

Name of Injured employee: _____

Job Title: _____ Dept.: _____

Date of Injury: _____ Exact Location: _____

Date of Birth: _____ Date of Hire: _____

Where did the accident or injury occur? _____

At what time did it occur? _____ a.m. p.m

Describe the injury in detail: _____

_____

_____

Will the injury cause loss of time? YES NO

When is the employee expected to return to work? _____

Any pre-existing physical disabilities? _____

Please indicate the injured area, the nature of the injury and the action taken:

☐ Head	☐ Hands	☐ Wounds	☐ Amputation	☐ 1st Aid Only	☐ Injured Sent:
☐ Eyes	☐ Fingers	☐ Strain & Sprain	☐ Burns	☐ Medical Only	☐ Home
☐ Trunk	☐ Legs	☐ Contusion	☐ Foreign Body	☐ Lost Time	☐ Dr. _____
☐ Arms	☐ Feet	☐ Fracture	☐ Skin (Occupational)	☐ Alleged	☐ Hosp. _____

Please indicate (x) all those that apply:

BASIC CAUSE:

- ☐ Operating Equipment Without Authority
- ☐ Environmental conditions (terrain,weather,etc.)
- ☐ Unsafe Equipment/Using Equipment Unsafely
- ☐ Unsafely Loading, Placing, Clearing brush
- ☐ Working on Moving or Dangerous Equipment
- ☐ Distraction, Teasing, Horse Play
- ☐ Failure to Use Personal Protective Devices
- ☐ Other (Explain)

CONTRIBUTING CAUSE, IF ANY

- ☐ Unguarded or Equipment Guards Absent
- ☐ Defective Tools, Equipment or Substance
- ☐ Unsafe Design or Construction of equipment
- ☐ Hazardous Conditions
- ☐ Unsafe Illumination
- ☐ Unsafe Ventilation
- ☐ Unsafe Clothing
- ☐ Other (Explain)

Describe accident in detail (use separate sheet of paper and include comments by eyewitnesses, injured employees, etc.) _____

_____

SUPERVISOR'S GUIDE TO CORRECTIVE ACTION :

UNSAFE ACT	UNSAFE CONDITION
Stop future incidents	Remove
Study the Job	Post Warning Signs
Provide Safety/Equipment Training	Advise Supervisor
Follow - up/Enforce	Advise Others (maintenance, Project Manager)

Describe the corrective action you will be taking: _____

_____

Supervisor's Signature: _____

Job Title: _____ Date: _____

EXHIBIT I
Confined Space Entry Program

ENVIRONMENTAL HEALTH & SAFETY
STANDARD OPERATING PROCEDURE
CONFINED SPACE ENTRY PERMIT

1.0 OBJECTIVE

The purpose of this Standard Operating Procedure (SOP) is to ensure safe entry, work and exit from a confined space; and to provide training information to protect individuals from the potentially dangerous situations that can occur. This program was developed in accordance with OSHA's standard, 29 CFR 1910.146, Permit-Required Confined Spaces.

2.0 SCOPE AND DEFINITIONS

This SOP prescribes minimum requirements to protect personnel from hazards associated with confined space entry. According to the OSHA standard, a confined space is defined as follows:

- $ Is large enough and so configured that an employee can bodily enter and perform assigned work
- $ Has limited or restricted means for entry or exit (e.g., tanks, vessels, silos, storage bins, hoppers, vaults, and pits)
- $ Is not designed for continuous employee occupancy

This SOP will be reviewed annually and amended, as needed, as the result of regulatory changes and changes in protection technology.

This SOP may be attached to a site-specific Health and Safety Plan (HASP) for hazardous waste site operations that may include confined space entry.

Definitions:

Acceptable entry conditions - conditions that must exist in a permit space to allow entry and to ensure that employees involved with a permit-required confined space entry can safely enter into and work within the space.

Attendant - an individual stationed outside one or more permit spaces who monitors the authorized entrants and who performs all attendant's duties assigned in the employer's permit space program.

Authorized entrant - an employee who is authorized by the employer to enter a permit space.

Blanking or blinding - the absolute closure of a pipe, line, or duct by the fastening of a solid plate (such as a spectacle blind or a skillet blind) that completely covers the bore and that is capable of withstanding the maximum pressure of the pipe, line, or duct with no leakage beyond the plate.

Confined space - a space that:

1. Is large enough and so configured that an employee can bodily enter and perform assigned work: and
2. Has limited or restricted means for entry or exit (for example, tanks, vessels, silos, storage bins, hoppers, vaults, and pits are spaces that my have limited means of entry.; and
3. Is not designed for continuous employee occupancy.

Double block and bleed - the closure of a line, duct, or pipe by closing and locking or tagging two in-line valves and by opening and locking or tagging a drain or vent valve in the line between the two closed valves.

Emergency - any occurrence (including any failure of hazard control or monitoring equipment) or event internal or external to the permit space that could endanger entrants.

Engulfment - the surrounding and effective capture of a person by a liquid or finely divided (flowable) solid substance that can be aspirated to cause death by filling or plugging the respiratory system or that can exert enough force on the body to cause death by strangulation, constriction, or crushing.

Entry - the action by which a person passes through an opening into a permit-required confined space. Entry includes ensuing work activities in that space and is considered to have occurred as soon as any part of the entrant's body breaks the plane of an opening into the space.

Entry permit (permit) - the written or printed document that is provided by the employer to allow and control entry into a permit space and that contains the information specified in paragraph (f) of this section.

Entry supervisor - the person (such as the employer, foreman, or crew chief) responsible for determining if acceptable entry conditions are present at a permit space where entry is planned, for authorizing entry and overseeing entry operations, and for terminating entry as required by this section.

NOTE: An entry supervisor also may serve as an attendant or as an authorized entrant, as long as that person is trained and equipped as required by this section for each role he or she fills. Also, the duties of entry supervisor may be passed from one individual to another during the course of an entry operation.

Hazardous atmosphere - an atmosphere that may expose employees to the risk of death, incapacitation, impairment of ability to self-rescue (that is, escape unaided from a permit space), injury, or acute illness from one or more of the following causes:

1. Flammable gas, vapor, or mist in excess of 10 percent of its lower flammable limit (LFL).
2. Airborne combustible dust at a concentration that meets or exceeds it LFL.

   NOTE: This concentration may be approximated as a condition in which the dust obscures vision at a distance of 5 feet (1.52 m) or less.
3. Atmospheric oxygen concentration below 19.5 percent or above 23.5 percent.
4. Atmospheric concentration of any substance for which a dose or a permissible exposure limit is published in Subpart G, Occupational Health and Environmental Control, or in Subpart Z, Toxic and Hazardous Substances, of this Part and which could result in employee exposure in excess of its dose or permissible exposure limit.

   NOTE: An atmospheric concentration of any substance that is not capable of causing death, incapacitation, impairment of ability to self-rescue, injury, or acute illness due to its health effects is not covered by this provision.
5. Any other atmospheric condition that is immediately dangerous to life or health.

   NOTE: For air contaminants for which OSHA has not determined a dose or permissible exposure limit, other sources of information, such as Material Safety Data Sheets that comply with the Hazard Communication Standard, ' 1910.1200, published information, and internal documents can provide guidance in establishing acceptable atmospheric conditions.

Hot work permit - the employer's written authorization to perform operations (for example, riveting, welding, cutting, burning, and heating) capable of providing a sources of ignition.

Immediately dangerous to life or health (IDLH) - any condition that poses an immediate or delayed threat to life or that would cause irreversible adverse health effects or that would interfere with an individual's ability to escape unaided from a permit space.

NOTE: Some materials -- hydrogen fluoride gas and cadmium vapor, for example -- may produce immediate transient effects that , even if severe, may pass without medical attention, but are

followed by sudden, possibly fatal collapse 12-72 hours after exposure. The victim "feels normal" from recovery from transient effects until collapse. Such materials in hazardous quantities are considered to be "immediately" dangerous to life or health.

Inerting - the displacement of the atmosphere in a permit space by a noncombustible gas (such as nitrogen) to such an extent that the resulting atmosphere is noncombustible.

NOTE: This procedure produces an IDLH oxygen-deficient atmosphere.

Isolation - the process by which a permit space is removed from service and completely protected against the release of energy and material into the space by such mens as: blanking or blinding; misaligning or removing sections of lines, pipes, or ducts; a double block and bleed system; lockout or tagout of all sources of energy; or blocking or disconnecting all mechanical linkages.

Line Breaking - the international opening of a pipe, line, or duct that is or has been carrying flammable, corrosive, or toxic material, an inert gas, or any fluid at a volume, pressure, or temperature capable of causing injury.

Non-permit confined space - a confined space that does not contain or, with respect to atmospheric hazards, have the potential to contain any hazard capable of causing death or serious physical harm.

Oxygen deficient atmosphere - an atmosphere containing less than 19.5 percent oxygen by volume.

Oxygen enriched atmosphere - an atmosphere containing more than 23.5 percent oxygen by volume.

Permit-required confined space (permit space) - a confined space that has one or more of the following characteristics:

1. Contains or has a potential to contain a hazardous atmosphere,
2. Contains a material that has the potential for engulfing an entrant,
3. Has an internal configuration such that an entrant could be trapped or asphyxiated by inwardly converging walls or by a floor which slopes downward and tapers to a smaller cross-section; or
4. Contains any other recognized serious safety or health hazard.

Permit-required confined space program (permit space program) - the employer's overall program for controlling, and, where appropriate, for protecting employees from, permit space hazards and for regulating employee entry into permit spaces.

Permit system - the employer's written procedure for preparing and issuing permits for entry and for returning the permit space to service following termination of entry.

Prohibited condition - any condition in permit space that is not allowed by the permit during the period when entry is authorized.

Rescue service - the personnel designated to rescue employees from permit space.

Retrieval system - the equipment (including a retrieval line, chest or full-body harness, wristlets, if appropriate, and a lifting device or anchor) used for non-entry rescue of persons from permit spaces.

Testing - the process by which the hazards that may confront entrants of a permit space are identified and evaluated. Testing includes specifying the tests that are to be performed in the permit space.

NOTE: Testing enables employers both to devise and implement adequate control measures for the protection of authorized entrants and to determine if acceptable entry conditions are present immediately prior to, and during entry.

3.0 RESPONSIBILITIES

3.1 **Employer** - Baker Environmental, Inc. (Baker) is the employer, and will provide the necessary personal protective equipment (PPE) to only its employees according to project and/or HASP requirements. Baker will provide health and safety training, and confined space entry training. Subcontractors will be responsible for developing their own confined space entry program, assuring their personnel are properly trained, and that the procedures meet or exceed OSHA's and Baker's confined space entry program and requirements.

3.2 **Employee** - The Baker employee will use the provided PPE in accordance with instructions and training received. Employee's who enter confined spaces will follow the confined space entry procedures specified in training, their SOP, and the HASP.

3.3 **Qualified Personnel** - For the purpose of this SOP, qualified personnel include: entry supervisor, authorized attendant, and authorized entrants. For site-specific situations, the entry supervisor may be the Project Health and Safety Officer (PHSO) or Site Health and Safety Officer (SHSO). The entry supervisor has the authority to modify PPE usage for the confined space entry according to exposure opportunities, exposure duration, and potential for adverse health effects or injury.

3.3.1 Entry Supervisor - Responsibilities

$ Know the hazards that my be faced during confined space entry.

$ Check that the appropriate information is included on the entry permit, verify that all the tests specified by the permit have been done, and that all procedures and equipment are in place before allowing an entry.

$ Cancel the permit.

$ Confirm that rescue services are available and that the means of contacting them are operable.

$ Remove unauthorized individuals who attempt to enter the confined space.

$ Determine when the responsibility of the entry operation is transferred, that the operation remains consistent with the terms of the entry permit, and that the entry conditions are maintained.

$ An entry supervisor also may serve as an attendant or as an authorized entrant, as long as that person is trained and equipped as required for each role that they fill.

$ Entry supervisors are authorized to sign the entry permit and they must cancel the permit prior to its expiration.

3.3.2 Responsibilities of authorized entrants are as follows:

$ They are to know the hazards that my be faced during entry.

$ The entrant will be taught in the use of testing and monitoring equipment; ventilating equipment; communication equipment; personal protective equipment (PPE); lighting equipment; equipment, such as ladders; rescue and emergency equipment, except to the extent that the equipment is provided by rescue services.

$ The authorized entrant will communicate with the authorized attendant when the entrant recognizes warning signs or symptoms of exposure to dangerous situations.

$ The authorized entrant will exit from the confined space as quickly as possible when the authorized attendant gives an evacuation warning, or a dangerous situation such as signs or symptoms of exposure are recognized.

3.3.3 Responsibilities of the authorized attendants are as follows:

$ The authorized attendant must never enter the confined space prior to contracting and receiving assistance from a helper, and summoning rescue personnel.

$ They remain outside the permit space at all times during any entry operation.

$ They keep an account of all entrants in the confined space.

$ They are trained to know the hazards that may be in the confined space.

$ They will perform no other duties that interfere with their primary duty of monitoring and protecting authorized entrants.

$ They maintain continuous communication with the authorized entrants.

$ They order the authorized entrants to leave the confined space immediately when an unsafe condition has been observed; detects a situation outside the space that could endanger the authorized entrants; or have to leave the area.

$ They call rescue and other emergency services as soon as it is determined that the authorized entrants need to be recused from the confined space.

$ They take actions that may be necessary to keep unauthorized people away from the confined space.

4.0 SPECIFIC COMPLIANCE REQUIREMENTS

4.1 Overview of OSHA Standard 29 CFR 1910.146

OSHA standard 29 CFR 1910.146 defines a confined space as an area that is large enough to bodily enter for assigned work, has restricted means for entry or exit, and is not designed for continuous human occupancy.

4.1.1 Permit-Required Confined Space

If a confined space has one or more of the following conditions, entry into the area must be performed under a confined space entry permit.

- Known or potentially hazardous atmosphere (i.e., presence of toxic or combustible gases, or oxygen deficiency or enrichment).

- Contains a material or moving part with the potential of entrapping or engulfing a worker.

- Has an interior structure with a sloping floor or converging walls that could cause entrapment or asphyxiation.

- Contains any other recognized serious safety or health hazard.

To comply with the OSHA standard, an employer must identify confined spaces that my be entered, and then fulfill the OSHA requirements for safe entry and exit. These OSHA requirements include the following:

$ The employer shall inform employees by posting danger signs, or other equally effective means, of the existence and location of and the danger posed by the permit required spaces. An example follows:

DANGER

CONFINED SPACE NO. 1

ENTRY PERMIT REQUIRED

CONTACT THE ENTRY SUPERVISOR

$ The employer shall develop and implement a written permit required confined space entry program that complies with 29 CFR 1910.146. the written program shall be available for inspection by the employees and their authorized representatives.

$ The employer shall identify and evaluate the hazards prior to and during entry (including continuous monitoring to wam of the buildup of contaminants).

$ The employer shall train and entrants and attendants and ensure their safety with personal protective equipment (PPE), lighting, and ventilation/

$ The employer shall establish rescue procedures via an in-house team or with an outside service.

$ The employer shall establish a system of preparing, issuing, using, and canceling entry permits.

$ The employer shall maintain detailed records of all permit-required confined space operations.

$ The employer shall inform outside contractors that will be working in permit-required confined spaces, that such entry will be allowed only thorough compliance with appropriate confined space procedures.

$ The employer shall inform outside contractor's of the hazards identified with the confined space, that host's experience with that space, any precautions or procedures that the host has implemented for the protection of employees inside or near the permit space where the contractor will be working.

$ The employer will coordinate entry operations with the contractor.

$ The contractor will debrief the employer at the conclusion of the entry operations regarding the permit space entry procedures, and hazards confronted or created in the confined space during entry operations.

$ The contractor will comply with the permit space requirements that apply to all employers.

4.2 Hazard Identification and Evaluation

Identification and evaluation of all hazards defined below are required.

$ The OSHA definition of a toxic atmosphere is any atmosphere that exceeds or could reasonably exceed permissible exposure limits (PEL) for any substance specified in subpart Z of 29 CFR 1910. Up-to-date Material Safety Data Sheets (MSDS's) as required by the OSHA Hazard Communication standard (29 CFR 1910.1200) are also required.

$ Irritants are substances that cause aggravation of tissue upon contact. Direct contact with the eyes can cause irritation; inhalation can irritate the upper respiratory system.

$ Oxygen deficiency is an atmosphere with less than 19.5% oxygen by volume. Air normally breathed contains 20.8 % oxygen. Oxygen deficiency is caused by displacement (by another gas), oxidation, or bacterial action. Heavier than air gases can collect in lower spots and displace oxygen.

$ Due to limited space and egress, physical hazards in a confined space are frequently more dangerous than elsewhere. The confined space must be properly isolated to prevent activation or introduction of hazardous materials. Physical hazards such as excessive heat, noise, slips, trips, and falls must also be addressed.

$ OSHA Standard "The Control of Hazardous Energy Sources" (29 CFR 1910.147) describes lockout/tagout requirements. Confined space isolation involves separation of a permit-required confined space from a potentially hazardous form of energy. Isolation by blanking or blinding of mechanical equipment is required. Electricity used in the operation of the confined space needs to be deenergized with lockout/tagout procedures.

$ Maintaining oxygen and air concentrations of dusts, toxic gases, and vapors at safe levels is the primary objective of ventilating a confined space. There is little natural ventilation in confined spaces. If required, intrinsically safe, grounded air movers can be placed at the manways to provide fresh air ventilation.

$ Air monitoring of the confined space includes representative samples of the atmospheric conditions inside. Individuals need to be trained in the proper use of air monitoring test equipment and understand that the conditions can vary and change.

For testing of the confined space, a LEL/O_2 meter is essential. These meters can also have carbon monoxide and hydrogen sulfide sensors that broaden their capabilities.

4.3 Confined Space Entry Permit System

A confined space entry permit provides several functions. It restricts entry to authorized personnel. It ensures that communication occurs and hazards are controlled. It ensures that appropriate safety precautions are specified, and it serves as an official written record of existing conditions, requirements, and safeguards. An example is at Attachment A.

4.4 Training Requirements

Training is a requirement for the confined space entry program. All individuals (i.e., authorized entrants, the authorized attendants, and entry supervisors) involved in the confined space entry must be trained. Training will be provided before an employee is assigned duties involving the confined space, before there is a change in the assigned duties, whenever there is a change in the permit-required space operations that presents a hazard about which the employee has not been trained, and whenever there is a reason to believe that there are derivations of procedures required or short comings in the employee's knowledge of the procedures. The employer is required to certify that training has been completed. The certification shall contain the employee's names, the dates of the training, and signature or initials of the trainer. The certification shall contain the employees' names, the dates of the training, and signature or initials of the trainer. The certification shall be available to the employees and their authorized representatives.

4.5 Rescue From A Confined Space

OSHA specifically mandates that the employer address rescue. The rules do not require an in-house team, but OSHA clearly establishes rescue as an employer responsibility.

Each member of a rescue team must receive proper PPE and rescue equipment, and be trained in their use. In addition to rescue training, each team member must be trained as an authorized entrant. Rescue techniques must be practiced at least annually. Practice must consist of simulated rescue operations in which rescuers remove dummies, manikins, or actual persons from an actual permit-required confined space or simulated space. Each rescue team member must be trained in basic first-aid and cardiopulmonary resuscitation (CPR).

If an off-site rescue unit is involved, the team must know what hazards may be encountered during a rescue. The off-site rescue team must have access to all permit-required confined spaces from which rescue may be necessary. Appropriate rescue plans must be developed, and rescue operations for those spaces practiced.

The response time requirement needs and availability and the training status of the off-site unit shall be evaluated.

4.6 Record Keeping

Entry permits will be kept for one-year to facilitate the review of the permit-required confined space program. Any problems encountered during an entry operation shall be noted on the pertinent permit so that the appropriate revisions to the program can be made.

5.0 PROCEDURES FOR MAKING A CONFINED SPACE ENTRY

Employees who will enter confined spaces shall use appropriate personal protective equipment (PPE), i.e., safety shoes with non-skid soles, safety glasses, head protection (hard hats), and other equipment as required. These may include spacial eye and respiratory protection as required by OSHA standards 29 CFR 1910.133 and 20 CFR 1010.134, respectively.

The following procedures will be used for Baker employees who will enter confined spaces, or all employees who will enter confined spaces under Baker's health and safety supervision:

$ Identify Confined Spaces to be entered

$ Entry Supervisor, authorized entrants, and authorized attendants evaluate and review the job to be done an identify the potential hazards as follows:

1. Review MSDS(s)

2. Discuss experience of past work done in the confined space

3. Discuss what work will be done in the confined space

$ Entry supervisor will obtain a confined space permit

$ Authorized personnel will remove the confined space from service by performing the following tasks as applicable:

1. Lockout/tagout electrical and mechanical devices; authorized personnel will place their lock/tag on equipment

2. Lines and pipes will be capped, blanked, or disconnected

3. Entry supervisor will annotate the confined space entry permit

$ Conduct air monitoring - the entry supervisor, authorized attendant, members of the authorized entrants, and/or outside rescue service as follows:

1. LEL/O_2 meter will be calibrated each day prior to entry as per manufacturer's recommendations using calibration gas specified for O_2/LEL meter

2. Hand-held lighting and other illumination utilized in confined space entry requirements will be made available:

   a. Shall be explosion-proof

   b. Be equipped with a guard to prevent contact with the bulb

   c. Entry supervisor will annotate the confined space entry permit

3. Open the hatchway of the confined space

   a. Allow natural ventilation to stabilize for a few minutes

   b. If required, attach intrinsically safe air mover (grounded and ventilate for an additional few minutes

   c. Entry supervisor will mark the confined space entry permit as to this procedure

4. Place the lower exposure limit (LEL) /O_2 meter probe at opening of hatchway

5. Read Oxygen level

   a. Normal O_2 in breathing air is 20.8%

   b. O_2 concentrations of safe entry (OSHA, NIOSH, NFPA) is 19.5% - 23.5%

6. Read LEL Level

   a. OSHA allows up to 10% of LEL. However, the acceptability of the level must be reviewed by the HSO office and the project H&S manager for each confined space.

   b. For confined spaces in which no liquid organics (including fuels) were stored, readings other than 0 need to be investigated.

7. Use colormetric detector tubes for chemical-specific monitoring when real-time chemical-specific monitoring is necessary and other members are not available for the particular gas.

8. If readings are not within the safe specification, allow ventilation to continue for 15 minutes and re-test.

9. If readings are within the safe specification, lower the probe into the confined space and take test at increasing depths (normally four foot intervals) until the probe is almost touching the bottom.

a. If readings are not within safe specifications at any of the increasing depths, allow ventilation to continue

b. Investigate for sources of the problem

10. Readings will be annotated on the confined space entry permit by the entry supervisor

$ If the confined space requires respiratory equipment or where rescue may be difficult, a tripod (vertical, downward entry), retrieval devices (body harnesses, lifelines), and wristlets will be used.

1. Authorized attendants will use this equipment to perform non-entry rescue

2. Entry supervisor will verify that rescue services are available and that the means of contacting them are operational

3. Entry supervisor will mark the telephone number of the rescue service (e.g. fire department and ambulance) on the confined space entry permit

4. Entry supervisor will mark PPE used by the authorized entrants and authorized attendants on the confined space entry permit

5. Entry supervisor will sign an entry approved or entry denied on the confined space entry permit

6. Authorized entrant(s), and authorized attendant(s) will sign the confined space entry permit

7. Entry supervisor will post a copy of the confined space entry permit at the hatchway

8. Authorized entrants will done the personal protective equipment that is required for the job

   a. Authorized attendant will be issued PPE identical to that issued to the authorized entrants or an SCBA

   b. If needed, authorized attendant will use emergency equipment to perform non-entry rescue

$ An initial reconnaissance will be performed in the confined space

1. An authorized entrant will test the confined space with personal LEL/O_2 monitor attached in such manner that it is readable within his field of vision; O_2 monitor will be calibrated as per manufacturer's recommendations using calibration gas specified for O_2 meter

2. Or, authorized attendant will perform continuous monitoring of the confined space from the outside.

3. Or, a combination of both methods

4. If O_2 and gas or vapor levels are within specifications, other authorized entrants can enter confined space

5. If O_2 and gas or vapor levels are not within specifications, the authorized entrant will exit the confined space

6. Investigation of the source of the problem will be initiated before authorized entrants can re-enter the confined space

$ Authorized attendant will have no duties that would take his attention away from the work or require him to leave the area

1. Authorized attendant will maintain voice (and visual, if possible) contact with all authorized entrants in the confined space

2. Authorized attendant will continuously monitor the confined space

   a. If irregularities within the confined space are detected, the authorized attendant will order the authorized entrants to exit

   b. Incase of an emergency, the authorized attendant must never enter the confined space prior to contracting and receiving assistance, and summoning rescue services.

3. Prior to this time, the authorized attendant should attempt to remove authorized entrants with lifelines and perform other rescue functions from outside the space