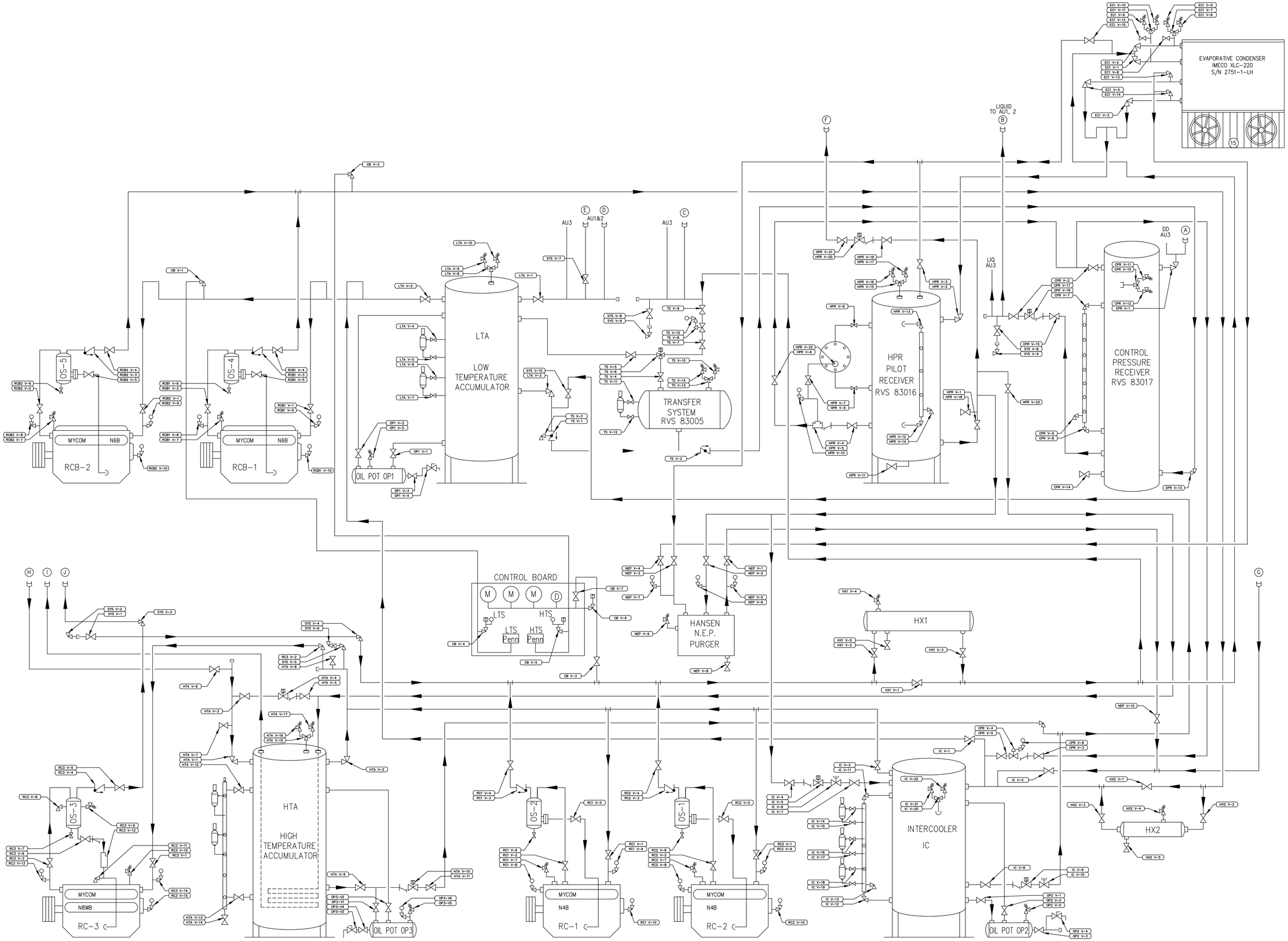

Rev.	Date	Revision Description

THIS DESIGN AND SPECIFICATION IS THE EXCLUSIVE PROPERTY OF AMERICAN REFRIGERATION COMPANY, INC. IT AND/OR THE DESIGN THERIN ARE NOT TO BE COPIED, SOLD, TRANSFERED OR REPRODUCED IN ANY WAY AND IS SUBJECT TO RETURN ON DEMAND. THE ITEMS DESCRIBED MAY NOT BE BUILT OR ASSEMBLED OR ITS DESIGN CRITERIA DISCLOSED TO OTHER PARTIES WITHOUT THE WRITTEN PERMISSION OF AMERICAN REFRIGERATION COMPANY, INC.

STAVIS SEAFOODS, INC.
212 Northern Ave #305
Boston, MA 02110

SEAL

AMERICAN
REFRIGERATION COMPANY

149 RIVER STREET
SUITE # 3
ANDOVER, MA 01810
t 978-474-4000
f 978-474-4001

www.americanrefrigeration.net

Engine Room SYSTEM P&ID

north

0' 0' 0' 0'

SCALE:	NTS
DATE:	10/8/2013
DRAWN BY:	MMH
DESIGNED BY:	
PROJECT # :	

R1

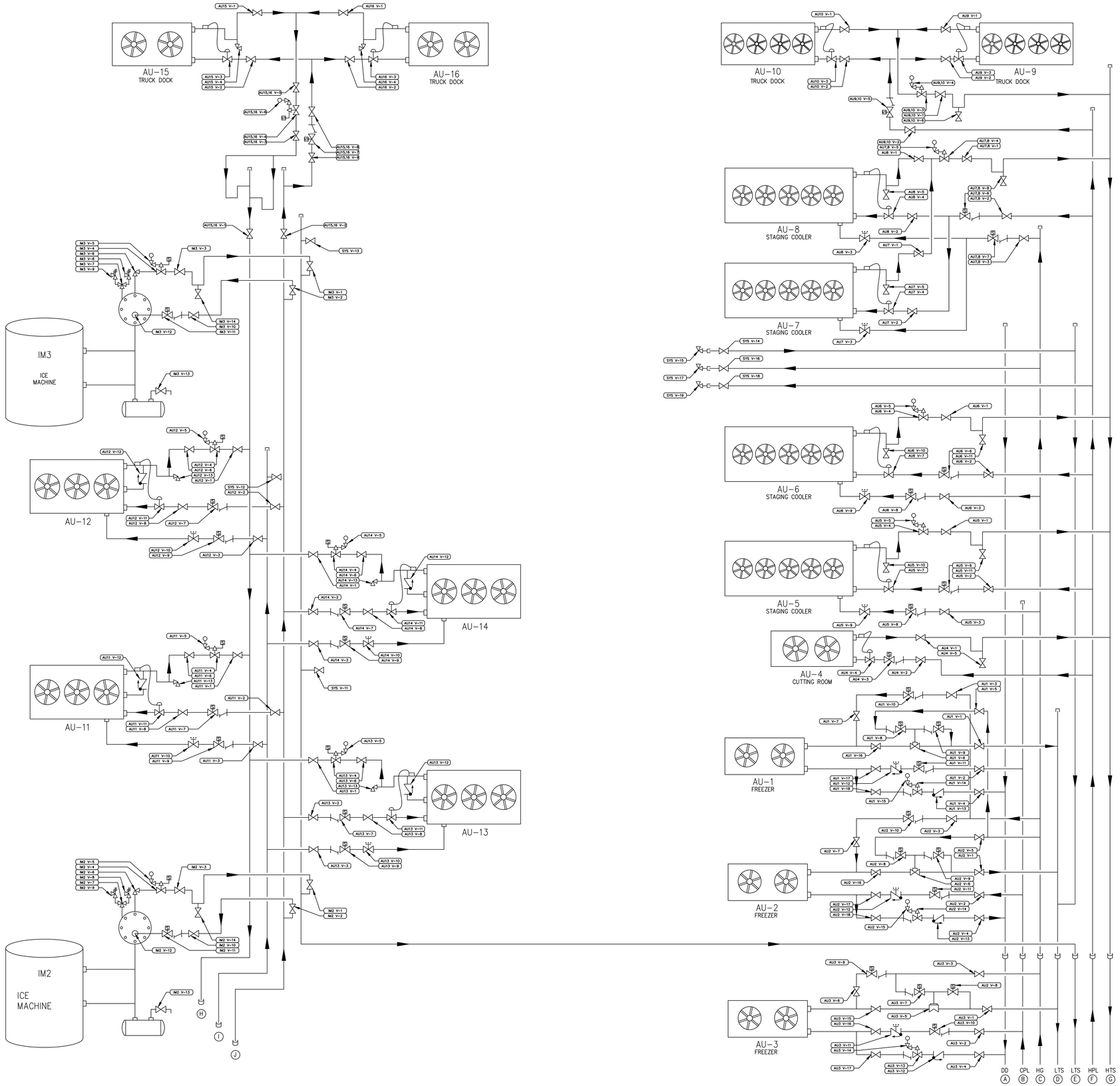

Rev.	Date	Revision Description

THIS DESIGN AND SPECIFICATION IS THE EXCLUSIVE PROPERTY OF AMERICAN REFRIGERATION COMPANY, INC. IT AND/OR THE DESIGN THERIN ARE NOT TO BE COPIED, SOLD, TRANSFERED OR REPRODUCED IN ANY WAY AND IS SUBJECT TO RETURN ON DEMAND. THE ITEMS DESCRIBED MAY NOT BE BUILT OR ASSEMBLED OR ITS DESIGN CRITERIA DISCLOSED TO OTHER PARTIES WITHOUT THE WRITTEN PERMISSION OF AMERICAN REFRIGERATION COMPANY, INC.

STAVIS SEAFOODS, INC.
212 Northern Ave #305
Boston, MA 02110

SEAL

AMERICAN
REFRIGERATION COMPANY

149 RIVER STREET
SUITE # 3
ANDOVER, MA 01810
t 978-474-4000
f 978-474-4001

www.americanrefrigeration.net

Engine Room SYSTEM P&ID

north

0' 0' 0' 0'

SCALE:	NTS
DATE:	10/8/2013
DRAWN BY:	MMH
DESIGNED BY:	
PROJECT # :	

R1.1