Appointment

From: Angelique Collier [angelique.collier@aes.com]
Sent: 9/21/2021 8:57:11 PM
To: Angelique Collier [angelique.collier@aes.com]; sputrich@haleyaldrich.com; Carlos Gonzalez [carlosm.gonzalez@aes.com]; Hector Avila [hector.avila@aes.com]; Erick Antonio Rocher Vazquez [erick.rocher@aes.com]; Jesus Bolinaga [jesus.bolinaga@aes.com]; Elias Sostre [elias.sostre@aes.com]; Boxerman, Samuel B. (sboxerman@sidley.com) [sboxerman@sidley.com]; Daniel DeVougas [daniel.devougas@aes.com]; Karen Ortiz Quiñones [karen.ortiz@aes.com]; Carpenter, Dale [Carpenter.Dale@epa.gov]; Jackson, Mary [Jackson.Mary@epa.gov]; Grossman, Lenny [Grossman.Lenny@epa.gov]; Behan, Frank [Behan.Frank@epa.gov]; Pradeep Jain [pjain@innovativetec.com]; Yonce, Stacey [yonce.stacey@epa.gov]; Huggins, Richard [Huggins.Richard@epa.gov]; Raack, Pete [Raack.Pete@epa.gov]; Conetta, Benny [Conetta.Benny@epa.gov]

Subject: AES Puerto Rico CCR Selected Remedy
Location: Microsoft Teams Meeting

Start: 10/1/2021 6:00:00 PM
End: 10/1/2021 7:00:00 PM
Show Time As: Tentative

Recurrence: (none)

Microsoft Teams meeting

Join on your computer or mobile app

Ex. 6 Personal Privacy (PP)

Find a local number | Reset PIN

Learn More | Meeting options

Message

From: Hector Avila [hector.avila@aes.com]
Sent: 6/1/2020 5:38:20 PM
To: Carpenter, Dale [Carpenter.Dale@epa.gov]; Jesus Bolinaga [jesus.bolinaga@aes.com]
CC: Schulz, Susan [Schulz.Susan@epa.gov]
Subject: RE: AES's Corrective Measures Assessment Document
Attachments: AES Response to EPA CMA Comments.pdf

Dear Mr. Carpenter:

Thank you for your review of the AES Puerto Rico Corrective Measures Assessment and for your comments on the report. Please find attached our responses to your comments along with additional information related to evaluation of natural attenuation mechanisms.

If you have any questions, please let me know.

Regards;

AES Puerto Rico
Héctor M. Ávila Caballero
AES Puerto Rico, L.P.
Senior Environmental Coordinator
PO Box 1890
Guayama, PR 00785
E-mail: hector.avila@aes.com
Tel: (787) 866-8117 Ext. 2266
Fax: (787) 866-8139
Mobile: Ex. 6 Personal Privacy (PP)
www.aespuertorico.com

The contents of this message may be privileged and confidential. Therefore, if this message has been received in error, please delete it without reading it. Your receipt of this message is not intended to waive any applicable privilege. Please do not disseminate this message without the permission of the author.

From: Carpenter, Dale <Carpenter.Dale@epa.gov>
Sent: Monday, March 9, 2020 9:53 AM
To: Jesus Bolinaga <jesus.bolinaga@aes.com>; Hector Avila <hector.avila@aes.com>
Cc: Schulz, Susan <Schulz.Susan@epa.gov>
Subject: FW: AES's Corrective Measures Assessment Document

USE CAUTION: External Sender

Gentlemen,

As a follow-up to my email below I am attaching EPA's comments on the draft Corrective Measures Assessment document for the AES facility in PR. A hard copy has also been mailed to you.

If you have any questions, please feel free to contact me.

Thank you.

Dale J. Carpenter, Chief
Sustainable Materials Management Section
EPA, Region 2

From: Carpenter, Dale
Sent: Thursday, January 30, 2020 9:50 AM
To: jesus.bolinaga@aes.com; hector.avila@aes.com
Cc: Schulz, Susan <Schulz.Susan@epa.gov>; Iglesias, Ariel <Iglesias.Ariel@epa.gov>; Mitchell, Judy-Ann <Mitchell.Judy-Ann@epa.gov>; Kijanka, Kevin <Kijanka.Kevin@epa.gov>
Subject: AES's Corrective Measures Assessment Document

Gentlemen,

As a courtesy, I am notifying you and AES that EPA is reviewing AES's recent Corrective Measures Assessment document for its Puerto Rico facility.

Please feel free to contact me if you have any questions.

Sincerely,

Dale J. Carpenter, Chief
Sustainable Materials Management Section
US EPA
Region 2

212 637-4110

USEPA Region 2 Comments

Alternative 1: Synthetic Liner and Monitored Natural Attenuation (MNA)

a. This alternative should include a discussion of which natural attenuation mechanisms (e.g., geochemical precipitation) are occurring at the unit, that could effectively treat the lithium, molybdenum and selenium exceedances in groundwater." Without one or more identified mechanisms, MNA would not be considered an effective remedial response at this site.' The specific mechanism(s) are needed in order to evaluate the remedy against criteria such as effectiveness, magnitude of residual risks due to further releases, long-term management required, etc.

RESPONSE: An evaluation was conducted during the Nature and Extent (N&E) investigation to assess site-specific natural attenuation mechanisms that contribute to limited transport of selenium, molybdenum, and lithium observed near the southern property boundary at the site. This evaluation methodology and results are described in **Attachment 1**.

b. The discussion of the remedy should include a:
   1. determination of whether the plume of impacted groundwater is expanding;
   2. determination that the expected rate and extent of attenuation within the aquifer is sufficient to achieve GWPS throughout the plume; and
   3. determination that immobilized constituents are stable and will not remobilize.

RESPONSE: Section 2.5 of the CMA, "Nature and Extent of Groundwater Impacts," describes the horizontal and vertical limits of Appendix IV constituents in groundwater. The N&E investigation completed in May 2019 demonstrated that the extent of Appendix IV constituents in groundwater that exceed the GWPS (lithium, molybdenum, and selenium) is limited. The concentrations of lithium, molybdenum, and selenium in groundwater samples collected from wells installed 200 feet downgradient from the AGREMAX™ Staging Area along the facility property boundary are well below the GWPS and in most cases the laboratory reporting limits. The observed reduction in concentration indicates that the rate of attenuation within the aquifer is sufficient to achieve GWPS within 200 feet of the source area boundary under current conditions. Alternative 1 includes a synthetic liner to isolate the AGREMAX™ Staging Area from soil and groundwater. With isolation of the source material, the concentrations of lithium, molybdenum, and selenium are expected to attenuate further since the source will be effectively removed.

Based on a geochemical evaluation completed for the Site (see the response to Comment on Alternative 1, Item a - above), geochemical conditions favor selenium and molybdenum being present in the form of precipitates, thereby immobile. For lithium, the primary attenuation mechanisms are sorption to and sequestration into clayey soils. Although the lithium mass adsorbed to and sequestered in aquifer solids may still migrate slowly downgradient after the isolation of the source material, it is expected that, without additional lithium input into the aquifer from the source, lithium concentrations will decline

and meet the GWPS downgradient. The monitoring portion of Alternative 1 will provide results to verify the extent of natural attenuation.

c. This alternative is also missing any discussion of the type of long-term management needed to maintain the integrity of the liner.

RESPONSE: Long-term management of the liner system would likely consist of a combination of operational and administrative controls. Operational controls would include the protective layer and dye layer that would be installed above liner system to maintain the integrity of the liner system. The dye layer will serve as a warning layer to prevent further vertical excavation into the protective layer and underlying liner system.

Administrative controls will include an AGREMAX™ Staging Area material management and handling plan including heavy equipment operator training to ensure that equipment operators will be informed regarding protection of the liner system and the lower vertical limits of AGREMAX™.

Alternative 2: Hydraulic Containment via pumping with treatment

a. This alternative needs a thorough discussion of how it satisfies the requirements for short- and long-term source control.

RESPONSE: The remedy requirements stated under 40 CFR § 257.97(b) do not include provisions for short- and long-term source control. The short- and long-term effectiveness and protectiveness of Alternative 2, relative to the capabilities of the other alternatives, are discussed in Section 5.2.1 (and following subsections) of the CMA. Section 5.2.1 evaluates the short- and long-term capabilities of each alternative using the eight sub-criteria listed in 40 CFR § 257.97(c)(1).

b. The discussion of this alternative should include information necessary to evaluate it according to criteria at 40 CFR § 257.97(c), such as water balance calculations or rates and volume of groundwater flow.

RESPONSE: As described in Section 4.2 of the CMA, the water balance and groundwater flux were evaluated using groundwater flow and transport modeling. The outcome of the groundwater flow and transport modeling was incorporated into the discussion and comparison of each alternative, presented in Sections 4.3.1 through 4.3.5 and Section 5.2 of the CMA.

Alternative 3: Hydraulic Containment via pumping with recirculation

a. This alternative needs a thorough discussion of how it satisfies the requirements for short- and long-term source control.

RESPONSE: The remedy requirements stated under 40 CFR § 257.97(b) do not include provisions for short- and long-term source control. The short- and long-term effectiveness and protectiveness of Alternative 3, relative to the capabilities of the other alternatives, are discussed in Section 5.2.1 (and following subsections) of the CMA. Section 5.2.1 evaluates the short- and long-term capabilities of each alternative using the eight sub-criteria listed in 40 CFR § 257.97(c)(1).

b. The discussion of this alternative should include information necessary to evaluate it according to criteria at 40 CFR § 257.97(c), such as water balance calculations or rates and volume of groundwater flow.

RESPONSE: As described in Section 4.2 of the CMA, the water balance and groundwater flux were evaluated using groundwater flow and transport modeling. The outcome of the groundwater flow and transport modeling was incorporated into the discussion and comparison of each alternative, presented in Sections 4.3.1 through 4.3.5 and Section 5.2 of the CMA.

c. Discharge of pumped water to the coal pile runoff pond or used for AGREMAX™ dust suppression needs to consider and assure compliance with the requirement at 40 CFR § 257.97(b) "to control releases so as to reduce or eliminate them and further releases of constituents in (40 CFR Part 257) appendix IV into the environment to the maximum extent feasible."

RESPONSE: The limited quantities of pumped groundwater derived from the operation of remedial Alternative 3 would be recirculated to the on-site lined coal pile runoff pond and/or lined cooling water make-up pond, or used for dust suppression and hydration of AGREMAX™ within the Staging Area. Management of water in this regard complies with requirements of 40 CFR § 257.97(b) and will be consistent with the AES-PR site permits and related facility operating requirements.

Alternative 4: Hydraulic Containment via pumping with barrier wall and treatment

a. This alternative needs a thorough discussion of how it satisfies the requirements for short- and long-term source control.

RESPONSE: The remedy requirements stated under 40 CFR § 257.97(b) do not include provisions for short- and long-term source control. The short- and long-term effectiveness and protectiveness of Alternative 4, relative to the capabilities of the other alternatives, are discussed in Section 5.2.1 (and following subsections) of the CMA. Section 5.2.1 evaluates the short- and long-term capabilities of each alternative using the eight sub-criteria listed in 40 CFR § 257.97(c)(1).

b. The discussion of this alternative should include information necessary to evaluate it according to criteria at 40 CFR § 257.97(c), such as water balance calculations or rates and volume of groundwater flow.

RESPONSE: As described in Section 4.2 of the CMA, the water balance and groundwater flux were evaluated using groundwater flow and transport modeling. The outcome of the groundwater flow and transport modeling was incorporated into the discussion and comparison of each alternative, presented in Sections 4.3.1 through 4.3.5 and Section 5.2 of the CMA.

Alternative 5: Hydraulic Containment via pumping with barrier wall and recirculation

a. This alternative needs a thorough discussion of how it satisfies the requirements for short- and long-term source control.

RESPONSE: The remedy requirements stated under 40 CFR § 257.97(b) do not include provisions for short- and long-term source control. The short- and long-term effectiveness and protectiveness of Alternative 5, relative to the capabilities of the other alternatives, are discussed in Section 5.2.1 (and following subsections) of the CMA. Section 5.2.1 evaluates the short- and long-term capabilities of each alternative using the eight sub-criteria listed in 40 CFR § 257.97(c)(1).

b. The discussion of this alternative should include information necessary to evaluate this alternative according to criteria at 40 CFR § 257.97(c), such as water balance calculations or rates and volume of groundwater flow.

RESPONSE: As described in Section 4.2 of the CMA, the water balance and groundwater flux were evaluated using groundwater flow and transport modeling. The outcome of the groundwater flow and transport modeling was incorporated into the discussion and comparison of each alternative, presented in Sections 4.3.1 through 4.3.5 and Section 5.2 of the CMA.

c. Discharge of pumped water to the coal pile runoff pond or used for AGREMAX™ dust suppression needs to consider and assure compliance with the requirement at 40 CFR § 257.97(b) "to control releases so as to reduce or eliminate them and further releases of constituents in (40 CFR Part 257) appendix IV into the environment to the maximum extent feasible. "

RESPONSE: The limited quantities of pumped groundwater derived from the operation of remedial Alternative 5 would be recirculated to the on-site lined coal pile runoff pond and/or lined cooling water make-up pond, or used for dust suppression and hydration of AGREMAX™ in the Staging Area. Management of water in this regard complies with requirements of 40 CFR § 257.97(b) and will be consistent with the AES-PR site permits and related facility operating requirements.

EPA has the following additional technical comments:

a. The discussion in section 5.2.2 of the report does not reflect that the source of contamination is the waste in the unit, which is CCR.

RESPONSE: The CMA, including Section 5.2.2, is based on the source of Appendix IV constituents in groundwater exceeding the GWPS being the AGREMAX™ Staging Area. Section 1.1 acknowledges that AGREMAX™ is produced from CCR generated at the power plant.

b. The evaluation in section 5.2.2.2 seems inverted in that alternatives which utilize treatment technologies that remove contaminated material from the environment, in accordance with 40 CFR § 257.97(b) and (c), should be rated more favorably than those that do not.

RESPONSE: Section 5.2.2.2 compares each alternative to 40 CFR § 257.97(c)(2)(ii) which considers "the extent to which treatment technologies may be used." The CMA is based on the understanding that an alternative that relies on fewer treatment technologies to achieve the GWPS is preferable to an alternative that relies on several treatment technologies. For example, Alternative 1 is considered favorable since it only relies on one treatment technology - natural attenuation - to achieve the GWPS. Alternatives 2, 4, and 5 are considered less favorable since these alternatives rely on two or more remedial technologies, with associated complexity. Those complexities include operational, maintenance, and potentially, aboveground treatment technologies and related operation and maintenance issues of the same, in the pursuit of achieving the GWPS. Since greater complexity would be expected to reduce the overall reliability of the remedial alternative, an alternative that includes several treatment technologies is considered less effective at controlling the source to reduce further releases per 40 CFR § 257.97(c)(2). This evaluation approach under 40 CFR 257.97(c)(2)(ii) is consistent with the approach taken under 40 CFR 257.97(c)(3) where a less difficult remedy (difficulty assessed based on complexity of remedy implementation, operational considerations and long-term maintenance and management) is considered more favorable than a more difficult technology.

c. The report needs to include additional technical information about the site in order to adequately assess the alternatives, such as a discussion of how variable hydraulic conductivity and subsurface hydrogeologic features may affect the direction and rate of flow across the site and thereby the effectiveness of proposed remedies.

RESPONSE: The Site geology and hydrogeology is summarized in Section 2.2 of the CMA with additional information, including subsurface boring logs, provided in Appendix A, "Groundwater Characterization Report." The range of hydraulic conductivity values and inferred rate of flow across the site for the upper water bearing unit is provided in Section 2.2. These factors were considered in assessing the effectiveness of the proposed remedies in CMA sections 4.3 and 5.2. The hydrogeologic evaluation completed within the timeframe required under the CCR Rule was adequate to assess the corrective measures alternatives.

d. For each of the alternatives, the discussion lacks estimates of the magnitude of reductions that can be reasonably expected with the proposed technology. Therefore, it is not clear whether each proposed remedy can reliably achieve the groundwater protection standards.

RESPONSE: In accordance with 40 CFR § 257.97(b)(2), each remedial alternative will reduce the concentration of Appendix IV constituents in groundwater to achieve the GWPS at the AGREMAX™ Staging Area boundary. The groundwater remedial technologies included in the CMA pass the threshold criteria found in 40 CFR § 257.97(b) and are recognized by the industry and USEPA as effective technologies which are appropriate for the treatment of metals in groundwater. Remedial technologies or alternatives that would not achieve the GWPS at the unit boundary were not included in the CMA as they could not satisfy 40 CFR § 257.97(b).

e. Any proposed groundwater remedy should take into consideration all media, including air, land and surface water, and the associated discussions of each potential remedy should include these considerations.

RESPONSE: All groundwater remedies (Alternatives 1 through 5) are understood to comply with all environmental requirements associated with fugitive dust control and surface water management, including application permit requirements. Furthermore, once a remedy is selected, AES will obtain all necessary permits and approvals before implementing the remedy and will continue to comply with all applicable environmental requirements.

Finally, in Appendix B: Groundwater Risk Evaluation of the report, the following is stated in the Introduction:

The temporary AGREMAX™ Storage Area is not a CCR management unit subject to the United States Environmental Protection Agency (USEPA) CCR Rule (USEPA, 2015). However, AES-PR voluntarily monitors groundwater at the temporary AGREMAX™ Storage Area following the USEPA CCR Rule requirements.

The EPA considers the AGREMAX™ Storage Area to be a CCR landfill as previously communicated in the Agency's correspondence to AES, dated December 22, 2016.

RESPONSE: AES complies with all CCR Rule requirements applicable to a CCR landfill. Certainly, AES developed the Corrective Measures Assessment following the requirements of the CCR Rule for a CCR landfill.

Attachment 1: Additional Technical Analysis - Evaluation of Natural Attenuation Mechanisms for Selenium, Molybdenum, and Lithium in Shallow Groundwater

ATTACHMENT 1

Evaluation of Natural Attenuation Mechanisms for Selenium, Molybdenum, and Lithium in Shallow Groundwater – AES PR Agremax Staging Area

An evaluation was conducted to assess site-specific natural attenuation mechanisms that contribute to limited transport of selenium, molybdenum, and lithium. This evaluation methodology and results are described below.

SELENIUM

A geochemical assessment was performed to determine the preferred state of selenium under site-specific redox and pH conditions. A Pourbaix (or Eh-pH) diagram was developed based on site-specific selenium concentrations and potential selenium speciation across various pH and Eh (electro-potential) conditions. The groundwater pH and redox potential data obtained from TW-102, TW-103, TW-105, TW-106, TW-107, TW-108, and MW-4 were then plotted on the site-specific Pourbaix diagram for selenium.

The results are shown in the figure below. All the pH and Eh data points are within the Se solid phase region, indicating that selenium is preferred to form solid precipitation under the site conditions near the southern property boundary. This assessment demonstrates that selenium precipitation is likely a major attenuation mechanism to remove soluble selenium from groundwater at the Site.

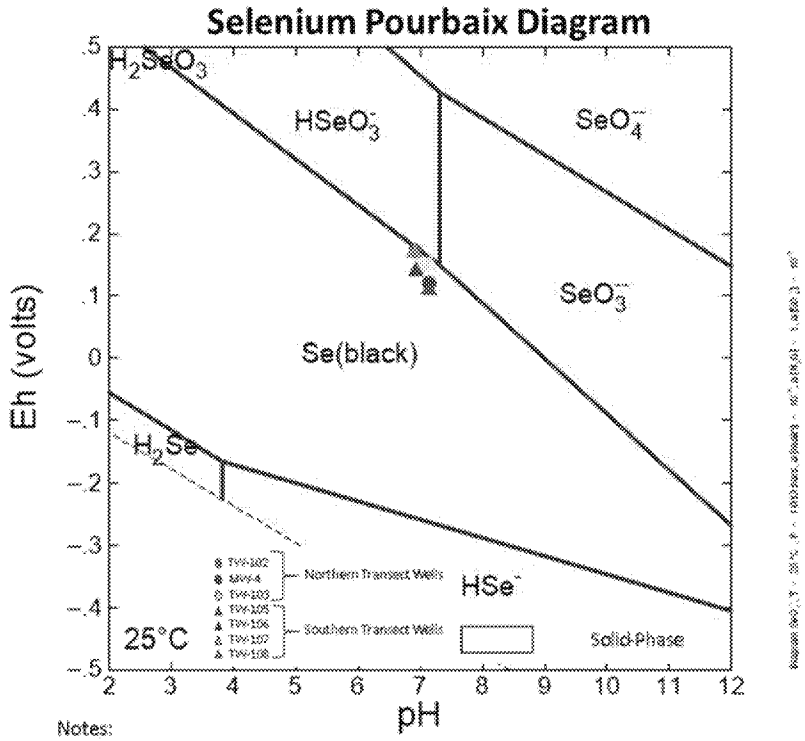

Notes:
1) All field ORP measurements converted to the Standard Hydrogen Electrode (SHE).
2) Field pH measurements plotted for accuracy.
3) Assumptions: Solute activities = measured concentrations in mols/L
4) Modelled system = Se-O-H

MOLYBDENUM

A geochemical assessment was performed to determine the preferred state of molybdenum under site-specific redox and pH conditions. A Pourbaix (or Eh-pH) diagram was developed based on site-specific molybdenum and calcium concentrations and potential molybdenum speciation across various pH and Eh (electro-potential) conditions. The groundwater pH and redox potential data obtained from TW-102, TW-103, TW-105, TW-106, TW-107, TW-108, and MW-4 were then plotted on the site-specific Pourbaix diagram for molybdenum.

The results are shown in the figure below. All the pH and Eh data points are within the $CaMoSO_4$ (powellite) solid phase region, indicating that molybdenum is preferred to form solid precipitation under the site conditions near the southern property boundary. This assessment demonstrates that molybdenum precipitation is likely a major attenuation mechanism to remove soluble molybdenum from groundwater at the Site.

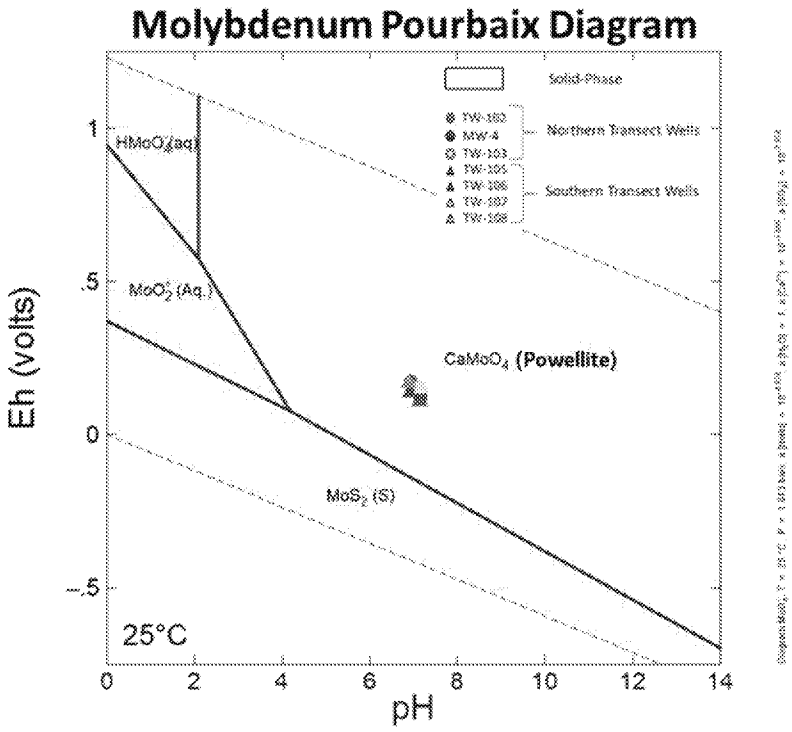

Notes:

1) All field ORP measurements converted to the Standard Hydrogen Electrode (SHE).
2) Field pH measurements plotted for accuracy.
3) Assumptions: Solute activities = measured concentrations in mols/L
4) Analytical concentrations results for TW-103 used to generate stability diagram
4) Modelled system = Mo-S-O-H-Ca
5) Thermodynamic database used: thermo.com.V8.R6+ . Full modified with molybdenum solubility data from Vlek and Lindsay (1977) - *Thermodynamic stability and solubility of molybdenum minerals in soils. Soil Science Society of America Journal, 41(1), pp.42-46.*

LITHIUM

Lithium Attenuation: No precipitation of lithium is predicted over the range of site specific redox, pH, and chemical conditions. Lithium has been used as a semi-conservative tracer for groundwater flow characterization. It is not likely to be permanently removed from groundwater during its transport at typical groundwater conditions, but it can be subject to sorption to clay minerals or metal oxide minerals to various degrees.[1,2,3]

Depending on the abundance of clay and oxide minerals, as well as the amount of lithium leached so far relative to the attenuation capacity of aquifer solids, lithium transport may be retarded significantly. Based on the boring logs, clayey sediments are prevailing in the shallow groundwater zone. Based on the monitoring results along the southern property boundary adjacent to the AGREMAX™ temporary staging area, clayey soil in the shallow aquifer has effectively limit lithium migration offsite.

Note that this transport retardation mechanism may also play a minor role to selenium and molybdenum attenuation.

VEGETATION ENHANCED METAL REMOVAL

Phytoextraction has been known to remove metals from shallow groundwater.[4] Vegetation between the AGREMAX™ temporary staging area and the property boundary (see the figure below) may also intercept and remove soluble metals in shallow groundwater.

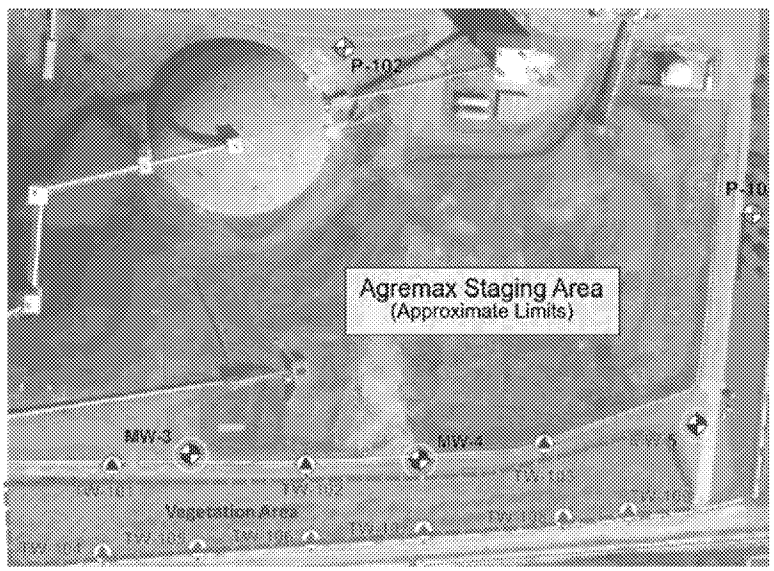

[1] Crawley, M.E., 1977. A geochemical model for lithium and boron (Doctoral dissertation, Texas Tech University).
[2] Garabedian, S.P., 1987. Large-scale dispersive transport in aquifers: Field experiments and reactive transport theory (Doctoral dissertation, Massachusetts Institute of Technology).
[3] Akhtar, M.S., Steenhuis, T.S., Richards, B.K. and McBride, M.B., 2003. Chloride and lithium transport in large arrays of undisturbed silt loam and sandy loam soil columns. Vadose Zone Journal, 2(4), pp.715-727.
[4] Muthusaravanan, S., Sivarajasekar, N., Vivek, J.S., Paramasivan, T., Naushad, M., Prakashmaran, J., Gayathri, V. and Al-Duaij, O.K., 2018. Phytoremediation of heavy metals: mechanisms, methods and enhancements. Environmental chemistry letters, 16(4), pp.1339-1359.

Message

From: Angelique Collier [angelique.collier@aes.com]
Sent: 9/16/2021 2:31:32 PM
To: Carpenter, Dale [Carpenter.Dale@epa.gov]
CC: Jesus Bolinaga [jesus.bolinaga@aes.com]
Subject: FW: AES PR

Hi Dale,

Thanks for reaching out. We would be happy to discuss the AES Puerto Rico CCR Corrective Measures with you and your colleagues. If you can please provide your questions/specific topics in advance of the call, it would be very helpful. We will plan to include our consultant as well to discuss technical aspects. I will coordinate availability on our side and get back with you shortly.

Angelique Collier
Director, Environmental Affairs
The AES Corporation
One Monument Circle | Indianapolis, IN 46204
angelique.collier@aes.com
Office: 317.261.5852
Mobile: Ex. 6 Personal Privacy (PP)

From: Carpenter, Dale <Carpenter.Dale@epa.gov>
Sent: Thursday, September 16, 2021 8:20 AM
To: Jesus Bolinaga <jesus.bolinaga@aes.com>
Cc: Kijanka, Kevin <Kijanka.Kevin@epa.gov>
Subject: AES PR

USE CAUTION: External Sender

Mr. Bolinaga,

Some of my EPA colleagues and I would like to set up a call with AES PR representatives to discuss some of the technical/logistical aspects of the corrective measures the facility is planning on implementing pursuant to the Coal Combustion Rule.

Please let me know what would be an agreeable date/time for us to meet. Please note that I also left a message with Ms. Angelique Collier regarding this matter.

Thank you for your assistance.

Sincerely,

Dale J. Carpenter, Chief
Sustainable Materials Management Section
EPA, Region 2

Message

From: Angelique Collier [angelique.collier@aes.com]
Sent: 9/17/2021 6:50:30 PM
To: Carpenter, Dale [Carpenter.Dale@epa.gov]
CC: Jesus Bolinaga [jesus.bolinaga@aes.com]
Subject: RE: AES PR

Hi Dale,
Our team is available to meet during the following timeslots. If one of these times works, please feel free to send an invitation, or let know if you would like for me to schedule.

Tue, 9/28 1:30-3:30
Fri, 10/1- 1:00-5:00

Thanks and have a nice weekend,
Angelique

From: Angelique Collier
Sent: Thursday, September 16, 2021 10:32 AM
To: Carpenter, Dale <Carpenter.Dale@epa.gov>
Cc: Jesus Bolinaga <jesus.bolinaga@AES.COM>
Subject: FW: AES PR

Hi Dale,

Thanks for reaching out. We would be happy to discuss the AES Puerto Rico CCR Corrective Measures with you and your colleagues. If you can please provide your questions/specific topics in advance of the call, it would be very helpful. We will plan to include our consultant as well to discuss technical aspects. I will coordinate availability on our side and get back with you shortly.

Angelique Collier
Director, Environmental Affairs
The AES Corporation
One Monument Circle | Indianapolis, IN 46204
angelique.collier@aes.com
Office: 317.261.5852
Mobile: Ex. 6 Personal Privacy (PP)

From: Carpenter, Dale <Carpenter.Dale@epa.gov>
Sent: Thursday, September 16, 2021 8:20 AM
To: Jesus Bolinaga <jesus.bolinaga@aes.com>
Cc: Kijanka, Kevin <Kijanka.Kevin@epa.gov>
Subject: AES PR

USE CAUTION: External Sender

Mr. Bolinaga,

Some of my EPA colleagues and I would like to set up a call with AES PR representatives to discuss some of the technical/logistical aspects of the corrective measures the facility is planning on implementing pursuant to the Coal Combustion Rule.

Please let me know what would be an agreeable date/time for us to meet. Please note that I also left a message with Ms. Angelique Collier regarding this matter.

Thank you for your assistance.

Sincerely,

Dale J. Carpenter, Chief
Sustainable Materials Management Section
EPA, Region 2

Message

From: Angelique Collier [angelique.collier@aes.com]
Sent: 10/7/2021 6:14:40 PM
To: Carpenter, Dale [Carpenter.Dale@epa.gov]
CC: Erick Antonio Rocher Vazquez [erick.rocher@aes.com]
Subject: Follow-up from October 1 Meeting
Attachments: Groundwater Summary.pdf; Water Collection Sump Details.pdf; Summary of Agremax Removal Documentation Procedure.pdf

Hi Dale,

Since our meeting last Friday, the AES Puerto Rico team has been working to gather the requested information. To date, we have gathered the following information which is contained in the attached documents:

1. Groundwater elevation data (including temporary piezometers);
2. Leachate collection management specifications; and
3. Summary of verification methodology for Agremax removal.

We are in the process of gathering relevant documentation related to the compatibility of the liner with Agremax and groundwater, as requested. I will be out of the office on vacation starting tomorrow and returning October 19 and will be back in touch when I return. If you need anything in the interim, please contact Erick Rocher at erick.rocher@aes.com.

Thanks,

Angelique Collier
Director, Environmental Affairs
The AES Corporation
One Monument Circle | Indianapolis, IN 46204
angelique.collier@aes.com
Office: 317.261.5852
Mobile: Ex. 6 Personal Privacy (PP)

HALEY & ALDRICH, INC.
6500 Rockside Road
Suite 200
Cleveland, OH 44131
216.469-5478

AES-PR AGREMAX Staging Area
High GW Elevation Determination Summary

- The high groundwater elevations underlying the Staging Area (used to design the liner system) were determined based on hydrogeologic interpretations using the following information:
    - 4 years of CCR groundwater monitoring network data from 2017 to 2020 (MW-1, MW-2, MW-3, MW-4 & MW-5) (see Table 1 and Figure 1);
    - Supplemental monitoring points including temporary piezometers and N&E monitoring points [see Table 1 and Figure 1];
    - Historic high water level measurements in existing site groundwater monitoring locations collected during significant storm events between 2017 and 2020. Those events included back-to-back peak Category 5 hurricane events Irma and Maria in September 2017.
- We synthetically combined this information using groundwater flow modeling tools and hydrogeologic interpretations to establish the high groundwater elevations.
- The high groundwater elevation contours (Figure 2) were converted into an AutoCAD Civil 3-D surface and provided to the design/construct contractor for their use in developing the final grading plans for the new liner system.

ED_006328A_00009710-00001

TABLE 1

AES-PR CCR GW Monitoring Network Wells

(Groundwater Elevations in Feet above MSL)

Date	MW-1	MW-2	MW-3	MW-4	MW-5
8-Aug-17	7.11	7.69	2.29	4.45	2.13
14-Aug-17	7.00	7.58	2.13	4.34	2.07
16-Aug-17	6.95	7.56	2.09	4.44	1.92
23-Aug-17	7.30	7.92	2.47	4.88	2.75
30-Aug-17	7.56	8.19	2.57	4.74	3.00
13-Sep-17	8.02	8.56	2.37	4.77	2.54
4-Oct-17	10.70	11.20	2.89	5.62	3.09
12-Oct-17	13.91	13.60	3.53	5.95	3.77
17-Oct-17	15.67	14.98	4.31	6.47	4.08
26-Jun-18	13.60	13.88	3.21	4.70	3.24
2-Oct-18	12.24	12.35	2.86	4.45	2.75
24-Apr-19	10.30	10.24	1.51	4.02	1.50
4-Jun-19	10.58	10.39	2.14	4.52	2.60
23-Sep-19	9.82	10.16	2.07	4.37	2.18
18-May-20	8.32	8.54	0.37	3.41	0.69
21-Sep-20	7.14	7.32	1.87	4.14	1.77

Supplemental Water Level Measurement Data

(Temp Monitoring Points)

	Date	
Location	3-Jun-19	21-Sep-20
P-102	-	6.53
P-106	-	4.01
P-207	-	4.54
P-208	-	6.15
P-209	-	5.32
TW-D	-	6.82
TW-101	1.84	1.68
TW-102	1.80	1.81
TW-103	2.80	2.44

Figure 1

Location of Groundwater Monitoring Wells and Piezometers

Agremax Staging Area, AES Puerto Rico LP, Guayama, PR

N

0 250 500 750 1000 ft

DNA-ENVIRONMENT, LLC

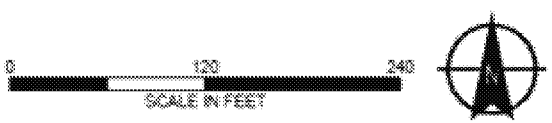

HALEY & ALDRICH

AES PUERTO RICO, LP
GUAYAMA, PUERTO RICO

FIGURE 2 - AGREMAX STAGING AREA
HIGH GW ELEVATION CONTOURS

OCTOBER 2020

AES Puerto Rico Liner Installation Water Collection Sump Details

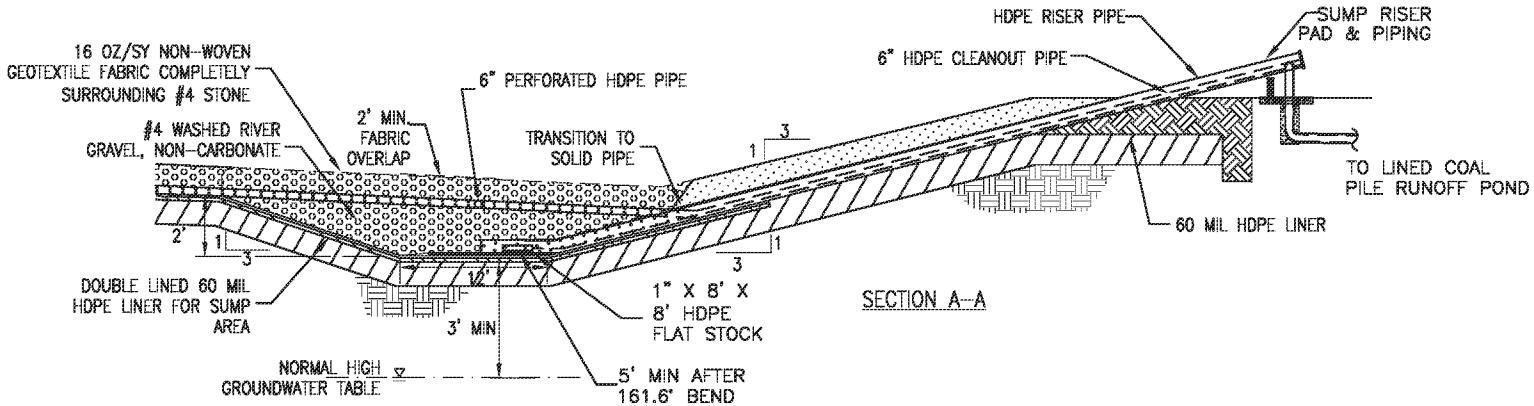

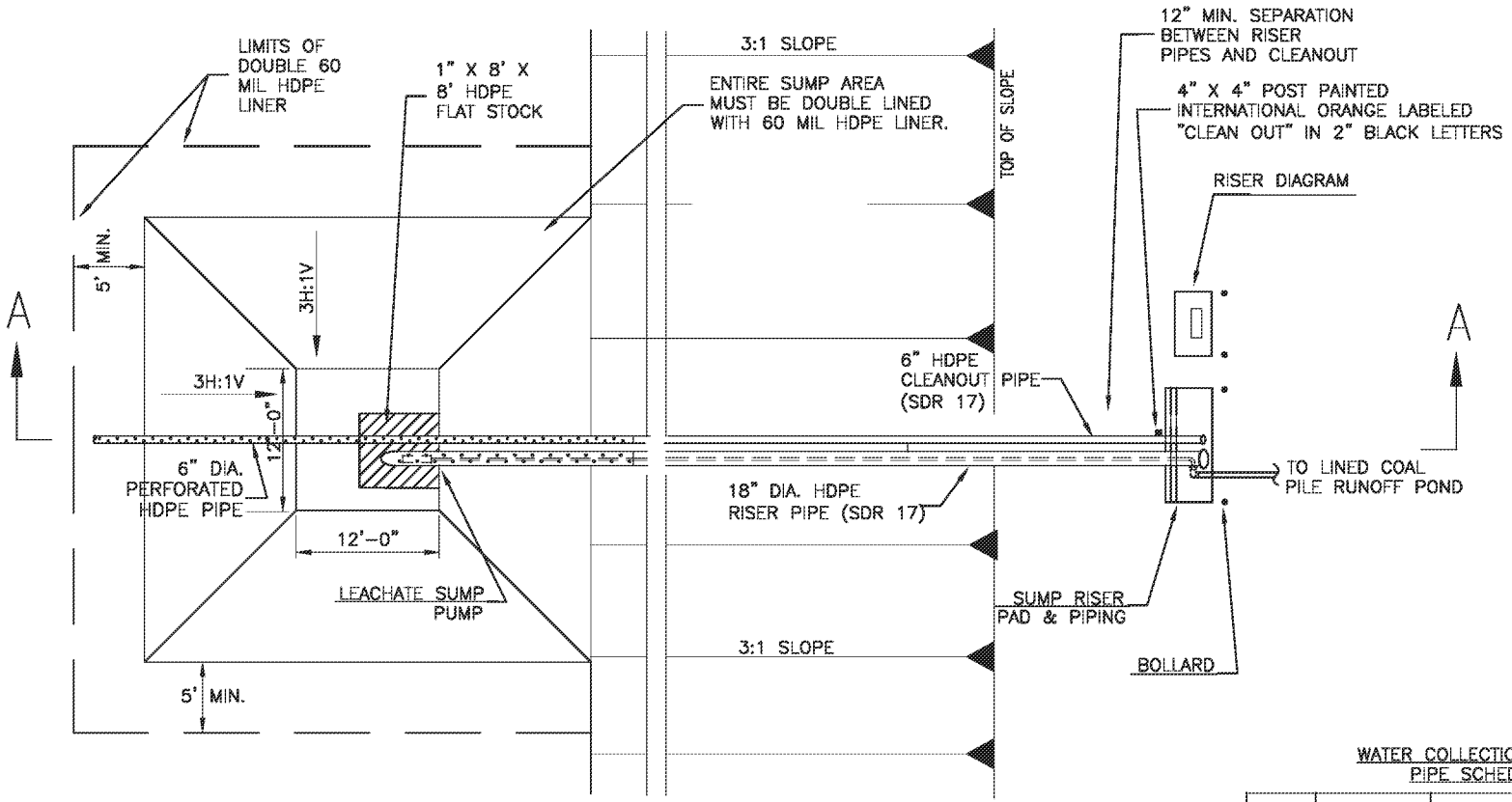

NOTES: Discharge from the leachate sump pump is routed through concrete channels to the lined coal pile runoff pond. AES Puerto Rico does not discharge wastewater from the facility.

5/4 DETAILS (TYP)
WATER COLLECTION SUMP
SCALE: N.T.S.

WATER COLLECTION SYSTEM PIPE SCHEDULE

	6" PERF PIPE	6" SOLID CLEANOUT PIPE	18" RISER PIPE (PERF LAST 10')
PH1	365'	36'	47'
PH2	265'/360'	36'	47'

NOTE: CONTRACTOR TO VERIFY ACTUAL LENGTH IN THE FIELD AND ANY DISCREPANCY CAUSED BY FIELD CONDITIONS.

Summary of Agremax™ Removal Documentation Procedure

The confirmatory post-removal testing procedure is to be carried out following removal of Agremax™ as determined by visual observation. The sampling protocol will be performed by AES Puerto Rico (AES-PR) only after it has been determined (based on visual inspection, photography, and drone fly-over/survey documentation) that the target area of removal has been cleared of Agremax™ (i.e., only underlying soils are visible). The brown underlying soils are distinguished visually from the gray/black Agremax™ material by color.

1) Sample Collection:
   a) AES-PR will provide sampling equipment suitable for collection of representative samples of the underlying soils once the area of removal has been verified as cleared of Agremax™ by AES-PR personnel or their representative. One (1) sample for approximately every 10,000 sf of the Agremax™ removal will be collected within each phase of the working area.
   b) Each sample location will require the collection of four (4) one (1) gallon zip lock bags of the representative underlying soils. If more convenient, AES-PR sampling team can fill a five (5) gallon bucket from each of the specified sampling locations, and then indoors or in a controlled environment create the four (4) one (1) gallon samples as specified for shipping.
   c) A flat-bladed hand shovel will be used to clear off the surface area of each sampling location to remove any loose particles and support the collection of a representative sample of the underlying soils/cleaned surface. A sampling placard (8- 1/2"x11" inch paper sign) will be placed by each sampling location (with inscribed sample number and date) and a photograph of each sampling point will be taken to document the conditions at each sampling location.
   d) Once the one (1) gallon zip lock samples are collected and prepared, AES-PR will clearly label each sample (with an indelible marker on the outside of each bag sample) to correspond with a sampling location number/ID. (ID, date, time, location)
2) Testing/Analytical Regime: Once sample collection, documentation, and sample preparations (bagging and labeling) are completed, a chain of custody for each laboratory will be prepared with duplicate copies kept on file at the AES-PR offices. The entire testing regime is to be performed at each sampling location (plus appropriate QA and duplicate testing as required) and is to include:
   a) Geotechnical/Physical:
      i) Polarized Light Microscopy (PLM) – particle count test (Fly Ash Determination – OPT.023.2)
      ii) Visual description (USCS method)
      iii) Index properties – grain size analysis [ASTM D422]
   b) Mineralogical/Analytical:
      i) Minerology Analysis – ASTM D4328
      ii) Soil pH - ASTM D4972

Message

From: Angelique Collier [angelique.collier@aes.com]
Sent: 10/26/2021 8:02:56 PM
To: Carpenter, Dale [Carpenter.Dale@epa.gov]
CC: Erick Antonio Rocher Vazquez [erick.rocher@aes.com]; Jackson, Mary [Jackson.Mary@epa.gov]; Grossman, Lenny [Grossman.Lenny@epa.gov]; Kijanka, Kevin [Kijanka.Kevin@epa.gov]
Subject: RE: Follow-up from October 1 Meeting
Attachments: AES PR Compatibility.pdf

Hi Dale,

Please see attached information related to the compatibility of the liner with Agremax, as requested. Regarding compatibility with groundwater, as discussed in the attached document, it was determined based on the contractor information that the manufacturers of all three liner components, but in particular the GCL and HDPE, were compatible with Agremax. Groundwater quality data from the CCR groundwater network surrounding the Agremax staging area (in relative comparison to the Agremax leachate) is a near neutral pH water and therefore, would be covered by the contractor information including manufacturer information and recommendations for compatibility.

We are in the process of gathering information in response to EPA's more recent additional questions received last week.

Thanks,
Angelique

From: Carpenter, Dale <Carpenter.Dale@epa.gov>
Sent: Wednesday, October 20, 2021 3:59 PM
To: Angelique Collier <angelique.collier@aes.com>
Cc: Erick Antonio Rocher Vazquez <erick.rocher@aes.com>; Jackson, Mary <Jackson.Mary@epa.gov>; Grossman, Lenny <Grossman.Lenny@epa.gov>; Kijanka, Kevin <Kijanka.Kevin@epa.gov>
Subject: RE: Follow-up from October 1 Meeting

USE CAUTION: External Sender

Angelique,

Thank you for providing this information. We have looked it over and have a few more questions that I hope you might be able to answer. Please see the attached document with our questions.

Also, as you indicated below, we await more information from your folks on the compatibility testing.

Thanks again. Look forward to hearing from you soon.

Dale

From: Angelique Collier <angelique.collier@aes.com>
Sent: Thursday, October 7, 2021 2:15 PM
To: Carpenter, Dale <Carpenter.Dale@epa.gov>
Cc: Erick Antonio Rocher Vazquez <erick.rocher@aes.com>
Subject: Follow-up from October 1 Meeting

Hi Dale,

Since our meeting last Friday, the AES Puerto Rico team has been working to gather the requested information. To date, we have gathered the following information which is contained in the attached documents:

1. Groundwater elevation data (including temporary piezometers);
2. Leachate collection management specifications; and
3. Summary of verification methodology for Agremax removal.

We are in the process of gathering relevant documentation related to the compatibility of the liner with Agremax and groundwater, as requested. I will be out of the office on vacation starting tomorrow and returning October 19 and will be back in touch when I return. If you need anything in the interim, please contact Erick Rocher at erick.rocher@aes.com.

Thanks,

Angelique Collier
Director, Environmental Affairs
The AES Corporation
One Monument Circle | Indianapolis, IN 46204
angelique.collier@aes.com
Office: 317.261.5852
Mobile: Ex. 6 Personal Privacy (PP)

OASIS CONSULTING SERVICES P.R., LLC

October 26, 2021

Mr. Carlos Gonzalez
Coal Combustion Team Leader
AES Puerto Rico, LP
P.O. Box 1890
Guayama, PR 00785

Dear Mr. Gonzalez:

AES Puerto Rico has requested documentation to support the compatibility (and liner equivalency) for the engineered liner system to be installed at the AES facility in Guayama, PR with the Agremax to be placed above the liner.

As detailed in our design documents, the engineered liner system designed for AES Puerto Rico has three principal layers – i) a Geocomposite that provides for drainage and leachate collection, ii) a 60-mil High-density polyethylene (HDPE) geomembrane liner commonly used in these types of applications, and iii) a Geosynthetic Clay Liner (GCL), consisting of a geotextile and bentonite composite, a recognized alternative to compacted clay. Accordingly, in response to your request, I am providing product manufacturer documentation as follows: Attachment A - Geocomposite, Attachment B - Geomembrane, and Attachment C - GCL. The manufacturer documentation supporting the liner component compatibility is summarized below based on manufacturer technical documentation for each of the liner components. In my professional opinion, the information below supports the conclusion that the liner system is compatible for this application in the Agremax Staging Area.

1. *Geocomposite (Skaps Transnet 270 (See Attachment A)*

Skaps Transnet with 270 Geonet and GE 180 geotextile is the geocomposite planned for use as the drainage layer/leachate collection layer in this application, and in my professional opinion, will perform as planned. (Note - the geocomposite section is comprised of a geotextile layer above and below the geonet material, which are thermally bonded together). The geonet and geotextile are chemically compatible between a pH of 2 to 13. Thus, as the AES synthetic precipitation leaching procedure (SPLP) data for Agremax shows an approximate range of pH from 8 to 12, this supports compatibility of the geocomposite layer with Agremax. Moreover, the manufacturer has likewise indicated that the geotextile is chemically compatible for this use.

Regarding the potential for clogging, the geotextile (on the top face of the geocomposite) has an Apparent Opening Size (AOS) of US Sieve #80 (0.18 mm). The planned protective layer (to be placed directly above the geocomposite drainage layer) exhibits 25% of soil particles passing the 200 sieve. Using typical industry recommendations, and per Task Force 25 guidance from *Designing with Geosynthetics, Koerner* (1990, second edition), the AOS is required to have a value of 30 or above. With this AOS, it is my professional opinion that the geotextile is capable of retaining particles 0.18 mm and larger. This meets the criteria for filtration of the geotextile for the protective cover using the Task Force 25 method, and in my professional opinion there is no potential for clogging based on this analysis. In addition, above the liner system, the 1-ft of barrier soil and 1-ft protective cover will act as a 2-ft thick soil filter and protective cover material for the Agremax in the Staging Area. See **Attachment A** for cut sheets and additional data on the geocomposite product and protective cover soil.

2. *60-mil HDPE (Solmax 60 mil textured liner) (See Attachment B)*

Please see **Attachment B** with confirmation from Solmax that the prescribed HDPE liner is compatible for the representative range of pH for Agremax. As such, the Solmax 60 mil textured liner is compatible for this application.

3. *GCL (CETCO Resistex 200 FLW9) (See Attachment C)*

GCL Resistex Plus (a.k.a, Resistex 200 FLW9[1]) is the GCL recommended by CETCO, a leading global supplier of geosynthetic clay liners. GCL Resistex Plus is CETCO's premier GCL most resistant to high strength leachates and is compatible for this AGREMAX application.

Equivalency Demonstration

The equivalency demonstration for the planned GCL liner to 2 ft of clay composite liner with a design permeability of 1×10^{-7} cm/s uses the method presented in EPA Publication No. EPA/600/A-93/283[2].

The GCL proposed for this application is judged to be equivalent to the 2-ft of compacted clay liner (CCL), and as such, the GCL would require a permeability of 3×10^{-9} cm/sec under a 1-ft head of liquid, representing a worst case condition. This value is met based on the CETCO MQC certification (see **Attachment C**).

Using this analysis in EPA Publication No. EPA/600/A-93/283 with the above reasonable assumptions I have concluded that the CETCO GCL to be used for this project is equivalent to 2-ft of CCL at 1×10^{-7} cm/sec permeability using 12 inches of water in both cases. We arrive at a permeability value required of the GCL of 3×10^{-9} cm/sec, which is equal to that provided on the CETCO manufacturer certifications (**Attachment C**). In addition, EPA Publication

[1] Note that "Resistex 200 FLW9" is the current name of the material being used, which was formerly named "Resistex Plus." This product has not changed; this is a nomenclature change only.

[2] Daniel, D. E., (1993), "Geosynthetic Clay Liners (GCLs) In Landfill Covers." Presented at *The Thirty-First Annual Solid Waste Exposition.* EPA Publication No. EPA/600/A-93/283.

No.EPA/600/A-93/283 shows the same required permeability equivalency for 2-ft CCL as GCL (page 18). In my professional opinion and based on the above information, the GCL provided by CETCO for this project is equivalent to 2-ft of compacted clay liner with a permeability of 1 x 10^{-7} cm/s.

If you have any questions, please contact me at (404) 307-2680 or mmonteleone@oasis-cs.com at your earliest convenience.

Sincerely,
OASIS CONSULTING SERVICES P.R., LLC

Michael Monteleone, P.E.
Member

ATTACHMENT A

SKAPS Industries (Nonwoven Division)
335, Athena Drive
Athens, GA 30601 (U.S.A.)
Phone (706) 354-3700 Fax (706) 354-3737
E-mail: contact@skaps.com

September 22, 2021
Comanco Environmental Corp.
4301 Sterling Commerce Drive
Plant City, FL 33566

Dear Sir/Madam:

This is to certify that SKAPS GE180 is a high quality needle-punched nonwoven geotextile made of 100% polypropylene staple fibers, randomly networked to form a high strength dimensionally stable fabric.SKAPS GE180 resists ultraviolet deterioration, rotting, biological degradation. The fabric is inert to commonly encountered soil chemicals. Polypropylene is stable within a pH range of 2 to 13. SKAPS GE180 conforms to the property values listed below:

PROPERTY	TEST METHOD	UNITS	M.A.R.V. Minimum Average Roll Value
Weight	ASTM D 5261	oz/sy (g/m^2)	8.00 (271)
Thickness*	ASTM D 5199	mils (mm)	100 (2.54)
Grab Tensile	ASTM D 4632	lbs (kN)	225 (1.00)
Grab Elongation	ASTM D 4632	%	50
Trapezoidal Tear	ASTM D 4533	lbs (kN)	90 (0.40)
CBR Puncture	ASTM D 6241	lbs (kN)	650 (2.89)
Permittivity*	ASTM D 4491	sec^{-1}	1.26
Permeability*	ASTM D 4491	cm/sec	0.30
Water Flow*	ASTM D 4491	gpm/ft^2(l/min/m^2)	100 (4074)
AOS*	ASTM D 4751	US Sieve (mm)	80 (0.18)
UV Resistance	ASTM D 4355	%/hrs	70/500

Notes:
* At the time of manufacturing. Handling may change these properties.

KOUROSH SABZEVARI
QUALITY CONTROL MANAGER

www.skaps.com

COMANCO

SUBMITTAL TRANSMITTAL

Submittal Description	Geocomposite Material Certifications		Date 10/30/2019
Engineer	GLENN WALLACE		
Owner	AES Corporation		
Submittal number	3-001		
Spec section			
Project	15199893	AES PUERTO RICO MATERIAL	
Contractor	Comanco International		
Current action	Submitted		
Routing: Engineer		Sent: 10/30/2019	Received
We are sending you	Attached		

Remarks

Copies	Date	Description
1	10/30/2019	Geocomposite Material Certifications

Contractor

Certify either A or B:

☒ A. We have verified that the material or equipment contained in this submittal meets all the requirements, including coordination with all related work, specified (no exceptions).

☐ B. We have verified that the material or equipment contained in this submittal meets all the requirements specified except for the attached deviations.

Deviation

Certified by Dan McRae Daniel McRae 2019.10.30 17:05:49 -04'00' Date 10/30/2019

SUBMITTAL REVIEW BY ENGINEER

☒ No exceptions taken

☐ Make corrections noted and resubmit

☐ Make corrections noted. Do not resubmit

☐ Rejected. Resubmit in accordance with contract documents

BY: DATE: 31 OCT 2019

Engineer Comments:

SKAPS

October 30, 2019
Comanco Environmental Corp.
4301 Sterling Commerce Drive
Plant City, FL, 33566

Ref. : AES Puerto Rico Liner CCR, PR
Customer P.O. # 38
Product : TN 270-2-6

We hereby certify that the TN 270-2-6 drainage geocomposite, meets or exceeds the project requirements as stated in the specifications. The properties listed in this section are:

Property	Test Method	Unit	Value	Qualifier
Geonet[3]				
Thickness	ASTM D 5199	mil	250	MAV[6]
Carbon Black	ASTM D 4218	%	2.0	MAV
Tensile Strength	ASTM D 7179	lbs/in	55	MAV
Melt Flow	ASTM D 1238[2]	g/10 min	1.0	Maximum
Density	ASTM D 1505	g/cm^3	0.94	MAV
Composite				
Ply Adhesion	ASTM D 7005	lb/in	1.0	MAV
Transmissivity[1]	ASTM D 4716	m^2/sec	5.0×10^{-4}	MAV
Geotextile[3,4]				
Fabric Weight	ASTM D 5261	oz/yd^2	6.0	MARV[5]
Grab Strength	ASTM D 4632	lbs	160	MARV
Grab Elongation	ASTM D 4632	%	50	MARV
Trap Tear Strength	ASTM D 4533	lbs	65	MARV
CBR Puncture	ASTM D 6241	lbs	450	MARV
Water Flow Rate	ASTM D 4491	gpm/ft^2	125	MARV
Permittivity	ASTM D 4491	sec^{-1}	1.63	MARV
AOS	ASTM D 4751	US Sieve	70	MaxARV
UV Resistance	ASTM D 4355	%/hrs	70/500	MARV

Notes:

1. *Transmissivity measured using water at 21 ± 2 ° C (70 ± 4 ° F) with a gradient of 0.1 and a confining pressure of 10,000 psf between steel plates after 15 minutes.*
2. *Condition 190/2.16*
3. *Geotextile and Geonet properties are prior to lamination.*
4. *Geotextile data is provided by the supplier.*
5. *MARV is statistically defined as mean minus two standard deviations and it is the value which is exceeded by 97.5% of all the test data.*
6. *Minium average value*

Sincerely,
Rajesh Patel
Rajesh Patel
QA Manager

APPROVED 5 QA

571 Industrial Parkway, Commerce, GA 30529 * Ph : 706-336-7000 * Fax : 706-336-7007 * Email : contact@skaps.com

SKAPS

Product: TN 270-2-6
Project : AES Puerto Rico Liner CCR, PR

We hereby certify the following test results for the above referenced product/project :

Geocomposite				Geonet					
Roll Number	Ply Adhesion (lb/in)		Transmissivity (m^2/sec)	Resin Lot Number	Density (g/cm^3)	Thickness (mils)	Carbon Black (%)	Tensile Strength MD (lb/in)	Transmissivity (m^2/sec)
	Side "A"	Side "B"							
92781010001	2.29	2.12	9.65×10^{-4}	HCBX 001335	0.9577	262	2.60	83	
92781010002				HCBX 001335	0.9577				
92781010003				HCBX 001335	0.9577				
92781010004				HCBX 001335	0.9577				
92781010005				HCBX 001335	0.9577				
92781010006				HCBX 001335	0.9577				
92781010007				HCBX 001335	0.9577				
92781010008				HCBX 001335	0.9577				
92781010009				HCBX 001335	0.9577				
92781010010				HCBX 001335	0.9577				
92781010011				HCBX 001335	0.9577				
92781010012				HCBX 001335	0.9577				
92781010013				HCBX 001335	0.9577				
92781010014				HCBX 001335	0.9577				
92781010015	2.78	2.56		HCBX 001335	0.9577	271	2.41	85	
92781010016				HCBX 001335	0.9577				
92781010017				HCBX 001335	0.9577				
92781010018				HCBX 001335	0.9577				

*571 Industrial Parkway, Commerce, GA 30529 * Ph : 706-336-7000 * Fax : 706-336-7007 * Email : contact@skaps.com*

POLYETHYLENE RESIN CERTIFICATION

Customer Name : Comanco Environmental Corp.
Project Name : AES Puerto Rico Liner CCR, PR
Geocomposite Manufacturer : SKAPS Industries
Geocomposite Production Plant : Commerce, GA
Geocomposite Brand Name : TN 270-2-6

We hereby certify the following test results for the above referenced product/project:

Resin Manufacturer	Resin Lot Number	Property	Test Method	Units	Resin Manufacturer Value	Tested Value*
Chevron Phillips Chemical Company	HCBX 001335	Density	ASTM D1505	g/cm^3	0.9553	0.9529
		Melt flow Index	ASTM D1238[a]	g/10 min	0.36	0.34

(a) Condition 190/2.16

* Data from SKAPS Quality Control

*571 Industrial Parkway, Commerce, GA 30529 * Ph : 706-336-7000 * Fax : 706-336-7007 * Email : contact@skaps.com*

Geotextile Certification

Product: TN 270-2-6
Project : AES Puerto Rico Liner CCR, PR

We hereby certify the following test results for the above referenced product/project :

GEOCOMP ROLL#	FABRIC SIDE	WEIGHT oz/yd^2	GRAB lbs. (MD)	GRAB ELG % (MD)	GRAB lbs. (XMD)	GRAB ELG % (XMD)	TRAP lbs. (MD)	TRAP lbs. (XMD)	CBR PUNCTURE lbs	AOS us sieve	WATER-FLOW gpm/ft^2	PERM-ITY sec^{-1}
92781010001	Side A	6.32	170	68	180	80	78	82	450	70	136	1.82
	Side B	6.47	164	72	178	83	80	90	478	70	136	1.82

*571 Industrial Parkway, Commerce, GA 30529 * Ph : 706-336-7000 * Fax : 706-336-7007 * Email : contact@skaps.com*

AES
PR

Particle Size Distribution Report

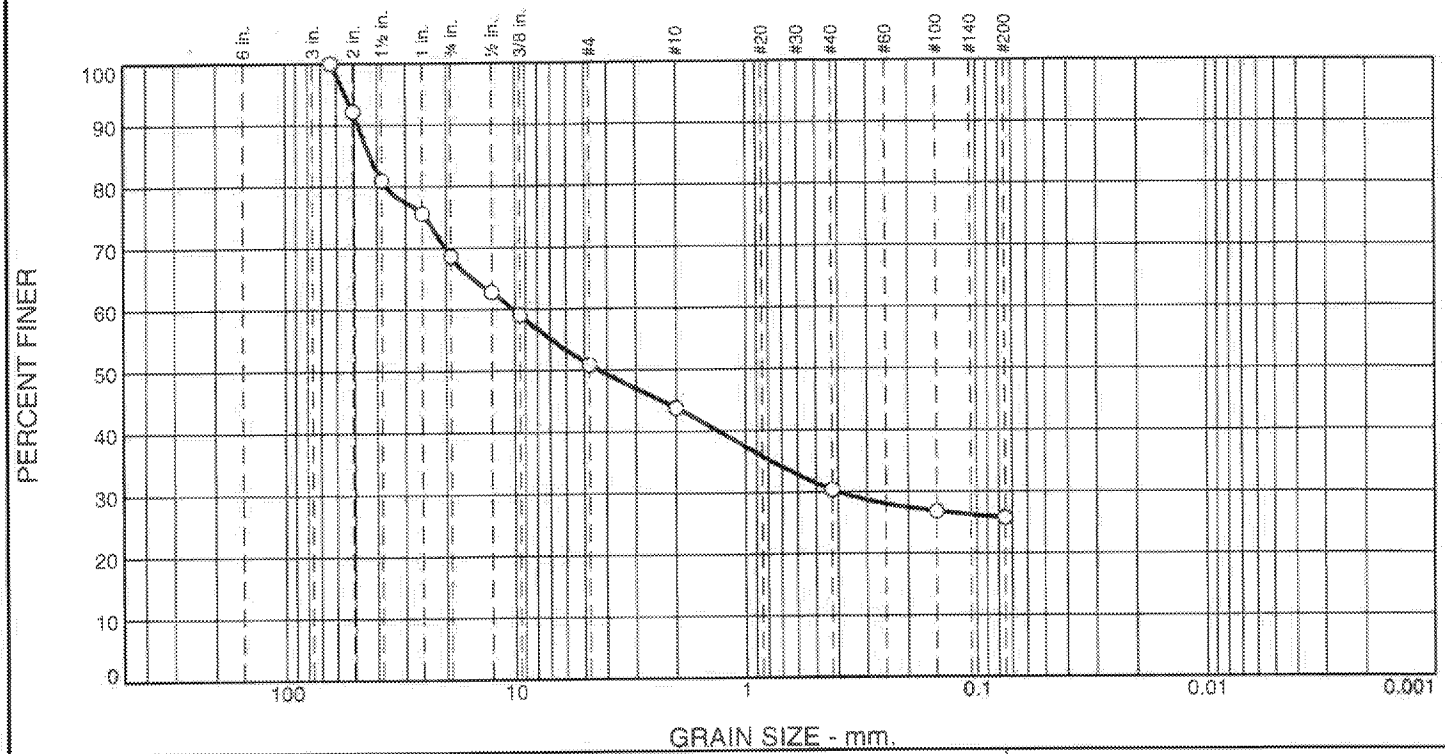

% +3"	% Gravel		% Sand			% Fines	
	Coarse	Fine	Coarse	Medium	Fine	Silt	Clay
0.0	31.4	17.7	7.1	13.4	4.7	25.7 (*)	% passing 200

Test Results (ASTM C 136 & ASTM C 117)			
Opening Size	Percent Finer	Spec.* (Percent)	Pass? (X=Fail)
2.5	100.0		
2	92.2		
1.5	80.9		
1	75.6		
.75	68.6		
.5	62.8		
.375	59.1		
#4	50.9		
#10	43.8		
#40	30.4		
#100	26.8		
#200	25.7		

* (no specification provided)

Material Description

Brown, silty gravel with sand.

Use Task Force 25

Atterberg Limits (ASTM D 4318)

PL= NP LL= NV PI= NP

Classification

USCS (D 2487)= GM AASHTO (M 145)= A-2-4(0)

Coefficients

D_{90}= 48.2160 D_{85}= 42.8360 D_{60}= 10.2172
D_{50}= 4.3104 D_{30}= 0.3979 D_{15}=
D_{10}= C_u= C_c=

Remarks

Date Received: 2/26/21 **Date Tested:** 3/10/21

Tested By: M. Reyes

Checked By: Javier Osorio, MECE, PE

Title: Geotechnical Engineer

Source of Sample: "El Cementerio-Guayama" **Date Sampled:**

Sample Number: L21-102

Since 1967
JACA & SIERRA
Testing Laboratory | Geotechnical Engineers

Client: Bellagio Corp
Project: AES-Guayama, PR
Project No: **Figure**

ATTACHMENT B

SOLMAX

Daniel McRae
Project Manager
COMANCO

Houston, September 29, 2021

Project : AES Guayama

Dear Mr. McRae:

HDPE geomembranes are a common barrier material employed in Coal Ash applications, and have no incompatibility issues with typical alkaline coal ash leachates (pH 12)

Should you need any other information, we would be pleased to set a conference call with our quality team and production manager.

Sincerely,

Mauricio Ossa
Responsable de l'ingénierie technique mondiale
Global Technical Engineering Manager
Houston – Texas

T +1 800 435-2008

GSE ENVIRONMENTAL, LLC | A SOLMAX COMPANY
19103 GUNDLE ROAD, HOUSTON, TX 77073, USA

SOLMAX.COM

COMANCO

SUBMITTAL TRANSMITTAL

Submittal Description	60mil HDPE White Textured Geomembrane Material Certifications		**Date** 09/30/2019
Engineer	GLENN WALLACE		
Owner	AES Corporation		
Submittal number	1-001		
Spec section			
Project	15199893	AES PUERTO RICO MATERIAL	
Contractor	Comanco International		
Current action	Submitted		
Routing: Engineer		**Sent:** 09/30/2019	**Received**
We are sending you	Attached		

Remarks

Copies	Date	Description
1	09/30/2019	60mil HDPE White Textured Geomembrane Material Certifications

Contractor

Certify either A or B:

☒ A. We have verified that the material or equipment contained in this submittal meets all the requirements, including coordination with all related work, specified (no exceptions).

☐ B. We have verified that the material or equipment contained in this submittal meets all the requirements specified except for the attached deviations.

Deviation

Certified by Daniel McRae 2019.09.30 18:12:49 -04'00' Date 09/30/2019

SUBMITTAL REVIEW BY ENGINEER

☐ No exceptions taken

☐ Make corrections noted and resubmit

☐ Make corrections noted. Do not resubmit

☐ Rejected. Resubmit in accordance with contract documents

BY: _____ DATE: 3 Oct 2019

Engineer Comments:

No exceptions taken

GSE Roll Allocation

Order SO-088007
Customer Comanco Environmental Corporation
Project Name AES PUERTO RICO MATERIAL

Roll#	Product Code	Mfg Date	Length
105196688	HDT-060GE-WBB-B-W0	8/15/2019	520
105196690	HDT-060GE-WBB-B-W0	8/16/2019	520
105196693	HDT-060GE-WBB-B-W0	8/16/2019	520

GSE ENVIRONMENTAL™ GSE Environmental, LLC

ROLL TEST DATA REPORT

GSE QC APPROVED

Report Date: Sep/26/2019

Sales Order No.	Customer Name	Project Location	Product Name	BOL Number
SO-088007	Comanco Environmental Corporation	Guayama PR US	HDT-080GE-WBB-B-W0	

Roll Number	Average Thickness ASTM D5994 (mils)	Minimum Thickness ASTM D5994 (mils)	Yield Strength ASTM D6693 (ppi) MD	Yield Strength ASTM D6693 (ppi) TD	Yield Elongation ASTM D6693 (%) MD	Yield Elongation ASTM D6693 (%) TD	Break Strength ASTM D6693 (ppi) MD	Break Strength ASTM D6693 (ppi) TD	Break Elongation ASTM D6693 (%) MD	Break Elongation ASTM D6693 (%) TD	Tear Resistance ASTM D1004 (lbs) MD	Tear Resistance ASTM D1004 (lbs) TD	Puncture Resistance ASTM D4833 (lbs)	Density ASTM D1505 (g/cc)	Carbon Black Content ASTM D4218 (%)	Carbon Black Dispersion ASTM D5596 (Rotex in Cat1 Cat2)	Asperity Height ASTM D7466 (mils) A Side	Asperity Height ASTM D7466 (mils) B Side
105196686	57	57	159	161	18	18	215	151	570	354	57	55	149	0.943	2.3	10	26	32
105196690	58	57	158	162	18	18	216	186	585	541	54	54	149	0.943	2.4	10	26	31
105196693	58	57	155	161	18	18	194	177	520	496	57	53	149	0.943	2.4	10	25	32

Laboratory Manager _____

This test report shall not be reproduced, except in full, without written approval of the laboratory

18103 Gundle Road Houston, TX 77073

GSE-8.2.4-029 Rev01 - - 02/10

ED_006328A_00009775-00016

Formosa Plastics

FORMOSA PLASTICS CORPORATION, TEXAS

201 FORMOSA DRIVE
PO BOX 700
POINT COMFORT TX 77978

PHONE:(888)FPCUSA3

Certificate of Analysis
(CONFIDENTIAL)

CUSTOMER:GSE ENVIRONMENTAL, LLC
UP TRACK 14732 WESTFIELD
19103 GUNDLE ROAD
HOUSTON TX 77070
PRODUCT :HL3812
RAILCAR FPAX214092
CLEANING/INSPECTION NO: 214092070219

S/O NO : EU7A524
CUSTOMER PO : 03-516588
DATE SHIPPED: 8/01/19
LOT NO : 19G1026
WEIGHT (LB) : 198,750.00
CUSTID:FT03112 SPIDE3

TEST ITEM	REFERENCE METHOD	TEST VALUE
Melt Index,g/10min	ASTM D1238	.065
HLMI, g/10 min.	ASTM D1238	10.4
Density, g/cm3	ASTM D1505	.9376

Notes:
Notes: Additive levels were tested and meet the min specification for this lot As a result Standard OIT (by ASTM D3895) is greater than 120 mins (nominal values not tested on every lot). As a result, High Pres sure OI T (by ASTM D5885) is greater than 1000 mins.

Linda Kao

QC SUPERVISOR: LINDA KAO

ATTACHMENT C

SUBMITTAL TRANSMITTAL

Submittal Description	Geosynthetic Clay Liner Material Certifications		**Date** 10/18/2019
Engineer	GLENN WALLACE		
Owner	AES Corporation		
Submittal number	2-001		
Spec section			
Project	15199893	AES PUERTO RICO MATERIAL	
Contractor	Comanco International		
Current action	Submitted		
Routing: Engineer		**Sent:** 10/18/2019	**Received**
We are sending you	Attached		

Remarks

Copies	Date	Description
1	10/18/2019	Geosynthetic Clay Liner Material Certifications

Contractor

Certify either A or B:

[X] A. We have verified that the material or equipment contained in this submittal meets all the requirements, including coordination with all related work, specified (no exceptions).

[ ] B. We have verified that the material or equipment contained in this submittal meets all the requirements specified except for the attached deviations.

Deviation

Certified by Dan McRae Daniel McRae 2019.10.18 11:37:08 -04'00' Date 10/18/2019

SUBMITTAL REVIEW BY ENGINEER

[X] No exceptions taken

[ ] Make corrections noted and resubmit

[ ] Make corrections noted. Do not resubmit

[ ] Rejected. Resubmit in accordance with contract documents

BY: DATE: 18 OCT 2019

Engineer Comments:

CETCO
Colloid Environmental Technologies Company LLC

GAI-LAP accredited

Date: 17-Oct-2019 13:02
Purchase Order: 36
ORDER NUMBER: 55041826

COMANCO ENVIRONMENTAL
4301 STERLING COMMERCE DR

PLANT CITY,FL,33566

To Whom It May Concern:

Please find the enclosed Manufacturing Quality Assurance/Manufacturing Quality Control (MQA/MQC) test data package for Geosynthetic Clay Liner (GCL) shipments to COMANCO ENVIRONMENTAL .

The enclosed data package includes results for all MQC tests required by ASTM D5889, with the exception of index flux/hydraulic conductivity. This test, which is run according to ASTM D5887, is normally performed once every 250,000 sq./ft. of GCL produced, unless a higher frequency is required by the project specifications. Because of the GCL's low permeability, this test can take several weeks to complete. The index flux/hydraulic conductivity results associated with this lot of material will be provided under separate cover as soon as they are available.

Although the index flux/hydraulic conductivity test results are not yet available, CETCO® accepts responsibility for our GCL should the index flux/hydraulic conductivity test produce unacceptable results. If, upon delivery and prior to installation, individual rolls of GCL are found to be nonconforming to accepted project specifications, CETCO® will replace the nonconforming material at no charge.

Questions regarding this information should be directed to CETCO® Technical Services at eptechservices@cetco.com.

Sincerely,

NICHOLLS, RYAN J
Quality Assurance Coordinator
CETCO® Lovell Plant

CETCO
Colloid Environmental Technologies Company LLC

GEOSYNTHETIC CLAY LINER
MANUFACTURING QUALITY ASSURANCE DATA PACKAGE

PROJECT NAME:
CUSTOMER P.O.: 36
ORDER NUMBER: 55041826
PREPARED FOR: COMANCO ENVIRONMENTAL

CONTENTS:

- Product Certifications
- GCL Order Packing List and MQA Tracking Form
- GCL Manufacturing Quality control test data
- Bentonite clay certification
- Raw Material Test results

PREPARED BY: NICHOLLS, RYAN J
Quality Assurance Coordinator
CETCO®
AMERICAN COLLOID COMPANY
92 HIGHWAY 37
LOVELL, 82431, WY
Telephone: 800-322-1159
Email: Ryan.Nicholls@mineralstech.com

CETCO
Colloid Environmental Technologies Company LLC

PRODUCT CERTIFICATIONS

PROJECT NAME:
CUSTOMER P.O.: 36
ORDER NUMBER: 55041826
PREPARED FOR: COMANCO ENVIRONMENTAL

The GCL Manufactured for the above-referenced order number is certified to meet the values listed in the tables below:

GCL PROPERTY SPECIFICATIONS FOR RESISTEX® 200 FLW9

Test Method	Test Method Property	Test Frequency	Certified Value
ASTM D6243	GCL Hydrated Internal Shear Strength	1,000,000 sq ft	500 - psf
ASTM D6496	GCL Peel Strength	40,000 sq ft (4,000 sq m)	3.5 - lbs/in
ASTM D6768	GCL Grab Strength	200,000 sq ft (20,000 sq m)	50 - lbs/in
ASTM D5993	Bentonite Mass/Area	40,000 sq ft (4,000 sq m)	.75 - lbs/sq ft
ASTM D5890	Bentonite Free Swell	50 tons	24 - ml
ASTM D5891	Bentonite Fluid Loss	50 tons	18 - ml
ASTM D5887	GCL-Hydraulic Conductivity	250,000 sq ft	3x10-9 - cm/s
ASTM D5887	GCL-Index Flux	250,000 sq ft	1x10-8 - m3/m2/s

All tensile testing is in the machine direction using ASTM D 6768. All peel strength testing is performed using ASTM D 6496. An "*" indicates non-standard testing, frequency, or certified value .

NEEDLE DETECTION AND REMOVAL PROCEDURE

CETCO® hereby affirms that all Bentomat® geosynthetic clay liner material manufactured for this project is continually passed under a magnet for needle removal and then screened with a metal detection device. CETCO® certifies Bentomat® to be essentially free of broken needless and fragments of needles that would negatively affect the performance of the final product.

Sincerely,

NICHOLLS, RYAN J
Quality Assurance Coordinator
CETCO® Lovell Plant

CETCO
Colloid Environmental Technologies Company LLC

GCL PACKING LIST AND MQA TRACKING FORM

Listing of finished and raw materials used to produce certification package number 55041826

GCL								GEOTEXTILE			CLAY
RESISTEX® 200 FLW9								01-9517	01-8991	01-9865	RP FLW9 PREBLEND-LBS
Order	**GCL Lot#**	**GCL Roll#**	**Length**	**Width**	**Weight**	**Sq. ft**	**Roll # Tested**	**Cap1 Roll #**	**Base1 Roll #**	**Base2 Roll #**	**Clay Lot #**
55041826	LL-42-2019	1687	150	15	2990	2250	1687	2026052239	2026047054	2025926371	L083119B
55041826	LL-42-2019	1688	150	15	3050	2250	1687	2026052239	2026047054	2025926371	L083119B
55041826	LL-42-2019	1689	150	15	3255	2250	1687	2026050988	2026047054	2025926371	L092019A
55041826	LL-42-2019	1690	150	15	3280	2250	1687	2026050988	2026047054	2025926371	L092019A
55041826	LL-42-2019	1691	150	15	3310	2250	1687	2026050988	2026047054	2025926371	L092019A
55041826	LL-42-2019	1692	150	15	3330	2250	1687	2026050988	2026047054	2025926371	L092019A
55041826	LL-42-2019	1693	150	15	3300	2250	1687	2026050988	2026047054	2025926371	L092019A
55041826	LL-42-2019	1694	150	15	3305	2250	1687	2026050988	2026047054	2025926371	L092019A
55041826	LL-42-2019	1695	150	15	3295	2250	1687	2026022499	2026047054	2025926371	L092019A
55041826	LL-42-2019	1696	150	15	3250	2250	1687	2026022499	2026047054	2025926371	L092019A
55041826	LL-42-2019	1697	150	15	3230	2250	1687	2026022499	2026047054	2025926371	L092019A
55041826	LL-42-2019	1698	150	15	3270	2250	1687	2026022499	2026047054	2025926371	L092019B
55041826	LL-42-2019	1699	150	15	3270	2250	1687	2026022499	2026047067	2025926371	L092019B
55041826	LL-42-2019	1700	150	15	3265	2250	1687	2026022499	2026047067	2025926371	L092019B
55041826	LL-42-2019	1701	150	15	3370	2250	1687	2026052234	2026047067	2026025199	L092019B
55041826	LL-42-2019	1702	150	15	3290	2250	1687	2026052234	2026047067	2026025199	L092019B
55041826	LL-42-2019	1703	150	15	3295	2250	1687	2026052234	2026047067	2026025199	L092019B
55041826	LL-42-2019	1704	150	15	3300	2250	1704	2026052234	2026047067	2026025199	L092019B
55041826	LL-42-2019	1705	150	15	3365	2250	1704	2026052234	2026047067	2026025199	L092019B
55041826	LL-42-2019	1706	150	15	3330	2250	1704	2026052234	2026047067	2026025199	L092019B
55041826	LL-42-2019	1707	150	15	3365	2250	1704	2026022543	2026047067	2026025199	L092319A
55041826	LL-42-2019	1708	150	15	3275	2250	1704	2026022543	2026047067	2026025199	L092319A
55041826	LL-42-2019	1709	150	15	3280	2250	1704	2026022543	2026047067	2026025199	L092319A
55041826	LL-42-2019	1710	150	15	3255	2250	1704	2026022543	2026047067	2026025199	L092319A
55041826	LL-42-2019	1711	150	15	3200	2250	1704	2026022543	2026050611	2026025199	L092319A
55041826	LL-42-2019	1712	150	15	3370	2250	1704	2026022543	2026050611	2026025199	L092319A
					Total Sq Ft:	58500		Total Number of Rolls Certified: 26			

CETCO
Colloid Environmental Technologies Company LLC

GCL MANUFACTURING QUALITY CONTROL TEST DATA

The following rolls in GCL certification package number 55041826 have been tested in our production facility lab.

Product	Lot# Tested	Roll# Tested	Mass Area	Grab Strength	Peel Strength			
		ASTM Test Method:	ASTM D5993	ASTM D6768	ASTM D6496			
		Required Value:	.75 - lbs/sq ft	50 - lbs/in	3.5 - lbs/in			
RESISTEX® 200 FLW9	LL-42-2019	1687	.91	113.8	11.8			
RESISTEX® 200 FLW9	LL-42-2019	1704	.93	113.8	5.6			

BENTONITE CLAY CERTIFICATION

The Bentonite Clay used to produce package 55041826 was tested in our production facility lab and yielded the following results.

Clay Lot #	Moist	Swell	Fluid Loss
ASTM Test Method:	ASTM D2216	ASTM D5890	ASTM D5891
Required Value:	12 - %	24 - ml	18 - ml
L083119B	9.1	38	6.8
L092019A	9.99	35	6.3
L092019B	9.38	44	6.4
L092319A	10.54	48	6.5

CETCO
Colloid Environmental Technologies Company LLC

GEOTEXTILE TEST RESULTS FROM MATERIAL SUPPLIERS

The GCL in certification package number 55041826 was manufactured with geotextiles which were tested and yielded the following results.

BASE GEOTEXTILE			
Material	Roll Number	Mass Area oz/yd2	Grab Strength lbs
01-8991	2026047054	6.66	224.62
01-9865	2025926371	3.53	192.69
01-8991	2026047067	6.11	196.9
01-8991	2026050611	6.56	219.98
01-9865	2026025199	3.38	201.34

COVER GEOTEXTILE			
Material	Roll Number	Mass Area oz/yd2	Grab Strength lbs
01-9517	2026052239	9.72	190.87
01-9517	2026050988	10.8	215.77
01-9517	2026022499	9.72	191.91
01-9517	2026052234	9.91	204.17
01-9517	2026022543	10.03	194.87

Certifications from our suppliers are on file at our production facility.

Message

From: Angelique Collier [angelique.collier@aes.com]
Sent: 11/5/2021 7:31:31 PM
To: Carpenter, Dale [Carpenter.Dale@epa.gov]
CC: Erick Antonio Rocher Vazquez [erick.rocher@aes.com]; Jackson, Mary [Jackson.Mary@epa.gov]; Grossman, Lenny [Grossman.Lenny@epa.gov]; Kijanka, Kevin [Kijanka.Kevin@epa.gov]
Subject: RE: Follow-up from October 1 Meeting
Attachments: AES-PR Response 11052021.pdf; Pond Liner Details.pdf; Pond Liner Details 2.pdf; Pond Liner Details 3.pdf; Coal Pile Runoff Pump Station.pdf

Good Afternoon Dale,

Please find attached AES-PR's responses and information in response to EPA's October 20, 2021 questions. If you need anything additional, please let me know.

Have a nice weekend,
Angelique

From: Carpenter, Dale <Carpenter.Dale@epa.gov>
Sent: Tuesday, October 26, 2021 4:09 PM
To: Angelique Collier <angelique.collier@aes.com>
Cc: Erick Antonio Rocher Vazquez <erick.rocher@aes.com>; Jackson, Mary <Jackson.Mary@epa.gov>; Grossman, Lenny <Grossman.Lenny@epa.gov>; Kijanka, Kevin <Kijanka.Kevin@epa.gov>
Subject: RE: Follow-up from October 1 Meeting

USE CAUTION: External Sender

Thank you Angelique!!!!

From: Angelique Collier <angelique.collier@aes.com>
Sent: Tuesday, October 26, 2021 4:03 PM
To: Carpenter, Dale <Carpenter.Dale@epa.gov>
Cc: Erick Antonio Rocher Vazquez <erick.rocher@aes.com>; Jackson, Mary <Jackson.Mary@epa.gov>; Grossman, Lenny <Grossman.Lenny@epa.gov>; Kijanka, Kevin <Kijanka.Kevin@epa.gov>
Subject: RE: Follow-up from October 1 Meeting

Hi Dale,

Please see attached information related to the compatibility of the liner with Agremax, as requested. Regarding compatibility with groundwater, as discussed in the attached document, it was determined based on the contractor information that the manufacturers of all three liner components, but in particular the GCL and HDPE, were compatible with Agremax. Groundwater quality data from the CCR groundwater network surrounding the Agremax staging area (in relative comparison to the Agremax leachate) is a near neutral pH water and therefore, would be covered by the contractor information including manufacturer information and recommendations for compatibility.

We are in the process of gathering information in response to EPA's more recent additional questions received last week.

Thanks,
Angelique

From: Carpenter, Dale <Carpenter.Dale@epa.gov>
Sent: Wednesday, October 20, 2021 3:59 PM
To: Angelique Collier <angelique.collier@aes.com>
Cc: Erick Antonio Rocher Vazquez <erick.rocher@aes.com>; Jackson, Mary <Jackson.Mary@epa.gov>; Grossman, Lenny <Grossman.Lenny@epa.gov>; Kijanka, Kevin <Kijanka.Kevin@epa.gov>
Subject: RE: Follow-up from October 1 Meeting

USE CAUTION: External Sender

Angelique,

Thank you for providing this information. We have looked it over and have a few more questions that I hope you might be able to answer. Please see the attached document with our questions.

Also, as you indicated below, we await more information from your folks on the compatibility testing.

Thanks again. Look forward to hearing from you soon.

Dale

From: Angelique Collier <angelique.collier@aes.com>
Sent: Thursday, October 7, 2021 2:15 PM
To: Carpenter, Dale <Carpenter.Dale@epa.gov>
Cc: Erick Antonio Rocher Vazquez <erick.rocher@aes.com>
Subject: Follow-up from October 1 Meeting

Hi Dale,

Since our meeting last Friday, the AES Puerto Rico team has been working to gather the requested information. To date, we have gathered the following information which is contained in the attached documents:

1. Groundwater elevation data (including temporary piezometers);
2. Leachate collection management specifications; and
3. Summary of verification methodology for Agremax removal.

We are in the process of gathering relevant documentation related to the compatibility of the liner with Agremax and groundwater, as requested. I will be out of the office on vacation starting tomorrow and returning October 19 and will be back in touch when I return. If you need anything in the interim, please contact Erick Rocher at erick.rocher@aes.com.

Thanks,

Angelique Collier
Director, Environmental Affairs
The AES Corporation
One Monument Circle | Indianapolis, IN 46204
angelique.collier@aes.com
Office: 317.261.5852
Mobile: Ex. 6 Personal Privacy (PP)

1) EPA Question: "Groundwater Data"
   a. "Several weekly measurements were provided for August 2017 and the first half of October 2017. Only semi-annual data are available after that. AES mentioned in the call that they used October 2017 data (elevations after two back-to-back hurricanes in September 2017 [Irma September 6-7, 2017, and Maria -September 19-21, 2017]) to model the seasonal high. The weekly data collected during the first half of October 2017 exhibit an increasing trend. No data from October 17, 2017 through June 26, 2018 are provided. The groundwater elevations in June 2018 were still more than the first two readings of Oct 2017 at some of the wells. The data suggests that the elevations peaked sometime between October 2017 and June 2018. EPA requests AES provide the modeling method(s), inputs, and results to assess the appropriateness of the established seasonal high groundwater elevations."

      AES-PR Response:

      - To determine the "design high groundwater elevations" (used to establish groundwater separation with the staging area liner system underlying the Agremax™ Staging Area), a two-step process was followed:
        - Step 1: The semi-annual groundwater level database[1] for the CCR groundwater well network from 2017 to 2020 was used to assess the "seasonal high-water table" elevations. Based on that assessment, it was determined that the semi-annual June 2018 data best represented the seasonal high-water table. This in our opinion, conservatively reflects the "normal fluctuations" (including normal seasonal high-water table) in the uppermost aquifer underlying the Agremax™ Staging Area.
        - Step 2: The effects from the 2017 hurricane/rainfall events (which included three consecutive months of the highest rainfall in the past two decades) were then for additional conservatism superimposed onto the "seasonal high-water table" (from Step 1) to create "design high groundwater elevations." Groundwater Vistas (version 7) flow modeling software was utilized to create a very conservative representation of the groundwater contour levels associated with the design high groundwater elevations using the available data from CCR monitoring network wells, supplemental piezometers located proximate to the Agremax™ Staging Area and the unique back-to-back hurricane/rainfall events of 2017. The groundwater modeling and resulting contours associated with the design high groundwater elevations are as shown on OASIS Plan dated October 2020, Sheet 2.
      - The AES-PR Agremax Staging Area is not a "new CCR landfill" subject to the requirements of 40 CFR 257.60(a). Nonetheless, if one were to look to those requirements, this approach meets those requirements and indeed is very conservative as it incorporates "extraordinary or highly aberrant conditions" (associated with the back-to-back Category 5 hurricane events) into the design groundwater levels. This is highly conservative given that, per the Preamble to the CCR Rule (p. 21362), "EPA does not intend for the facility to account for extraordinary or highly aberrant conditions."

[1] This data was provided to US EPA on October 7, 2021 by email.

- While one could speculate regarding additional increases in groundwater elevations after the extreme hurricane/rainfall events of 2017 (specifically between October 18th, 2017, and June 26, 2018), the continued upscaling of the "design high groundwater elevations" would result in projections beyond a reasonable consideration for the seasonal high water table evaluations as defined in 257.60(a) (and supporting information in the CCR Rule Preamble page p. 21362) because the groundwater data used already takes into account extraordinary conditions.

b. September 2019 and 2020 elevations are used to compare with the bottom liner on Sheets 2, 6 and 7 of Oasis Consulting Services design drawings dated October 2020.
   i. EPA Question: EPA requests AES explain the pertinence of these data with respect to the seasonal high that was established using the modeling results based on post-hurricane 2017 elevation measurements."
      AES-PR Response: The design high groundwater elevations underlying the Staging Area that were used to design the liner system are the elevations as described in the Haley & Aldrich (H&A) document title "AES-PR AGREMAX Staging Area High GW Elevation Determination Summary" provided to US EPA by email on October 7, 2021 and further clarified in the response to Question 1a above. The Oasis drawings labeled "Groundwater Elevation (September 2020)" are in reference to the date that Oasis received the design high groundwater elevations prepared by H&A described above in response to Question 1a.
   ii. EPA Question: "Note 1 on Sheets 2 through 5 suggests that current and proposed grades are referenced to the mean low water. The groundwater elevation data provided by AES are referenced to the mean sea level. Are the groundwater elevations presented in the Oasis drawing set referenced to the mean low water for consistency?"
      AES-PR Response: The reference to mean low water level is associated only with the aerial survey of the Agremax Staging Area and not groundwater levels. Groundwater levels are based on mean sea level.

c. EPA Question: "AES should consider conducting a GCL compatibility evaluation with respect to groundwater quality if any part of GCL is expected to have an intermittent/recurring connection with the groundwater."
   AES-PR Response: Please see email response provided on October 26, 2021, and the response to Question 1a above. Regarding intermittent/recurring contact between the liner system and groundwater, the high groundwater elevations used in the Oasis design (i.e., the design high groundwater elevations) are highly conservative and include the effects of back-to-back Category 5 hurricanes and three of the highest rainfall months in the past two decades. Therefore, because we utilized this highly conservative approach, we have designed to avoid intermittent/recurring contact of groundwater with the liner system and normal fluctuations in groundwater including the seasonal high-water table. While the Agremax™ Staging Area is not a "new CCR landfill," this approach to selecting the design high groundwater elevations is more conservative than even the requirement for a new CCR landfill in 257.60(a) (i.e., "normal fluctuations in groundwater elevations (including the seasonal high-water table")) because the groundwater data used already takes into account extraordinary conditions. In addition, the Preamble p. 21362 clarifies that EPA did not intend for the phrase "normal fluctuations" to mean that the facility

must "account for extraordinary or highly aberrant conditions". However, the approach utilized in the determination of the design high groundwater elevations did include considerations for extreme and rare weather events and rainfall conditions as noted above.

2) EPA Question: "The sump detail that AES provided suggests that the sump areas (the lowest point of the lined area) will be double-lined. The detail that AES provided does not indicate whether the second layer of geomembrane will be placed below or above the GCL. EPA requests AES provide a cross-section of the bottom liner depicting the proposed double liner configuration."
AES-PR Response: The second layer of HDPE is placed above the GCL as shown in the detail below:

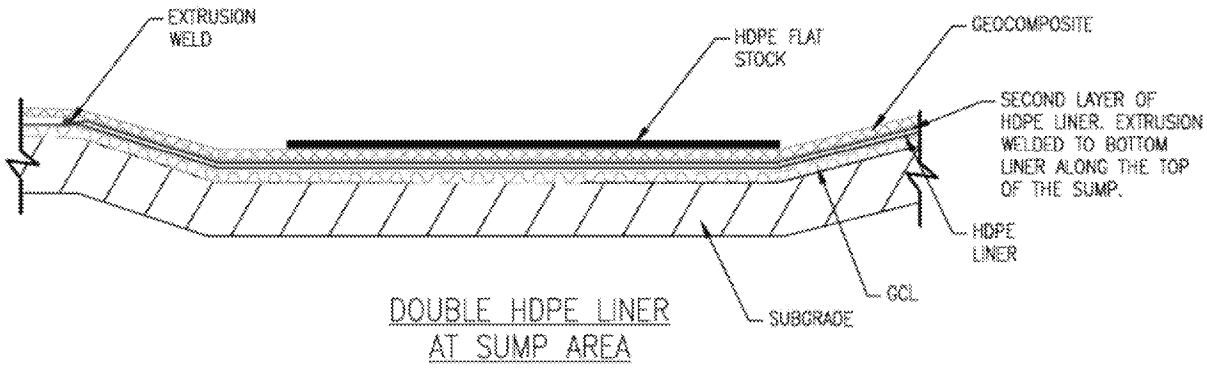

3) EPA Question: "We understand that AES will provide the GCL compatibility results with respect to Agremax. AES should also include a calculation package demonstrating that the proposed GCL (based on the GCL hydraulic conductivity measured using Agremax leachate) is hydraulically equivalent to a 2-feet thick compacted clay liner with a max hydraulic conductivity of 10^{-7} cm/sec."
AES-PR Response: In response to this request, AES-PR has provided calculations demonstrating the proposed GCL is hydraulically equivalent to a 2-feet thick compacted clay liner in the attachment provided to EPA by email on October 26, 2021. However, such a demonstration is not required as it is not the basis of the Selected Remedy associated with the CMA process. Rather, the Selected Remedy is based on a low-permeability geomembrane liner (HDPE) with a minimum 1 x 10^{-7} centimeters per second hydraulic conductivity. That liner is to be installed under the footprint of the AGREMAX™ staging area to control the source of CCR-related constituents and minimize infiltration of the AGREMAX™ in the Staging Area.

4) EPA Question: "AES plans to pump leachate to the coal pile run-off pond and from there to the onsite wastewater treatment plant. AES indicated that the coal pile run-off pond is lined. The performance of the coal pile run-off pond liner system impacts the efficacy of the proposed corrective measure to address ongoing groundwater exceedances. AES is requested to provide coal pile run-off pond liner design details."
AES-PR Response: Design details are being provided in the attachment documents.

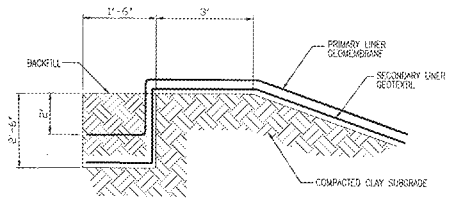

TYPICAL SECTION A
N.T.S.
367400-5-CV-0-SLPL-40
367400-5-CV-0-SLPL-41
367400-5-CV-0-00.SD-11
367400-5-CV-0-00.SD-12

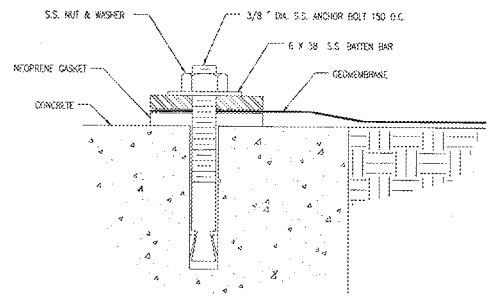

TYPICAL DETAIL 1
N.T.S.
367400-5-CV-0-00.SD-11
(ALTERNATE TO HDPE SERROLOCK)

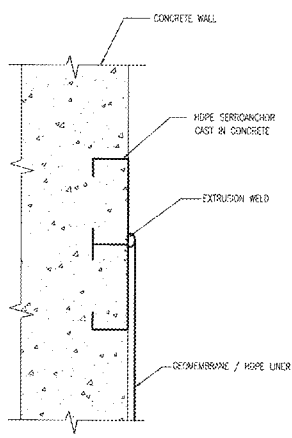

DETAIL 2
N.T.S.
367400-5-CV-0-00.SD-11
(PREFERRED LINER ATTACHMENT)

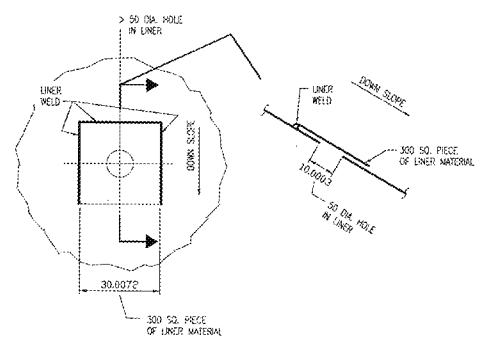

DETAIL 3
N.T.S.
367400-5-CV-0-00.SD-11

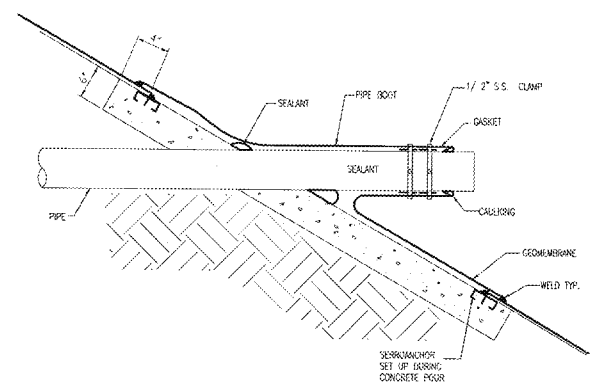

DETAIL 4
N.T.S.
367400-5-CV-0-00.SD-11
(SITE RUNOFF BASIN)

G:\2001\210\ACAD\BALANCE OF URBANIZATION\LINERDET1.DWG

REV	DATE	DESIGNED	CHECKED	CIVIL	ELEC	MECH	APPRD
1	04/11/01	C.E.A.	R.F.M.	R.F.M.	L.F.R.		R.S.C.
0	10/26/00	C.E.A.	R.F.M.	R.F.M.	L.F.R.	A.L.	R.S.C.

DRAWING NO. 367400-5-CV-0-00.SD-10 REV 1

SEAL

APPROVED FOR CONSTRUCTION

DRAWN	C.E.A.	DATE	10/18/2000
DESIGNED	C.E.A.	DATE	10/18/2000
CHECKED	R.F.M.	DATE	10/18/2000
E. INSP.	L.F.R.	DATE	10/18/2000
C. INSP.	R.F.M.	DATE	10/18/2000
M. INSP.	A.L.	DATE	10/18/2000
APPR.	R.S.C.	DATE	10/18/2000

CARIBBEAN ARCHITECTS & ENGINEERS

A PART OF

DUKE FLUOR DANIEL
CARIBBEAN S. E.

AES PUERTO RICO

TOTAL ENERGY PLANT
GUAYAMA, PUERTO RICO

DRAWING TITLE

BALANCE OF URBANIZATION-
PONDS LINER SECTION
AND DETAILS NO.1

DRAWING NO. 367400-5-CV-0-00.SD-10 REV 1

SCALE: N.T.S.

ED_006328A_00009833-00001

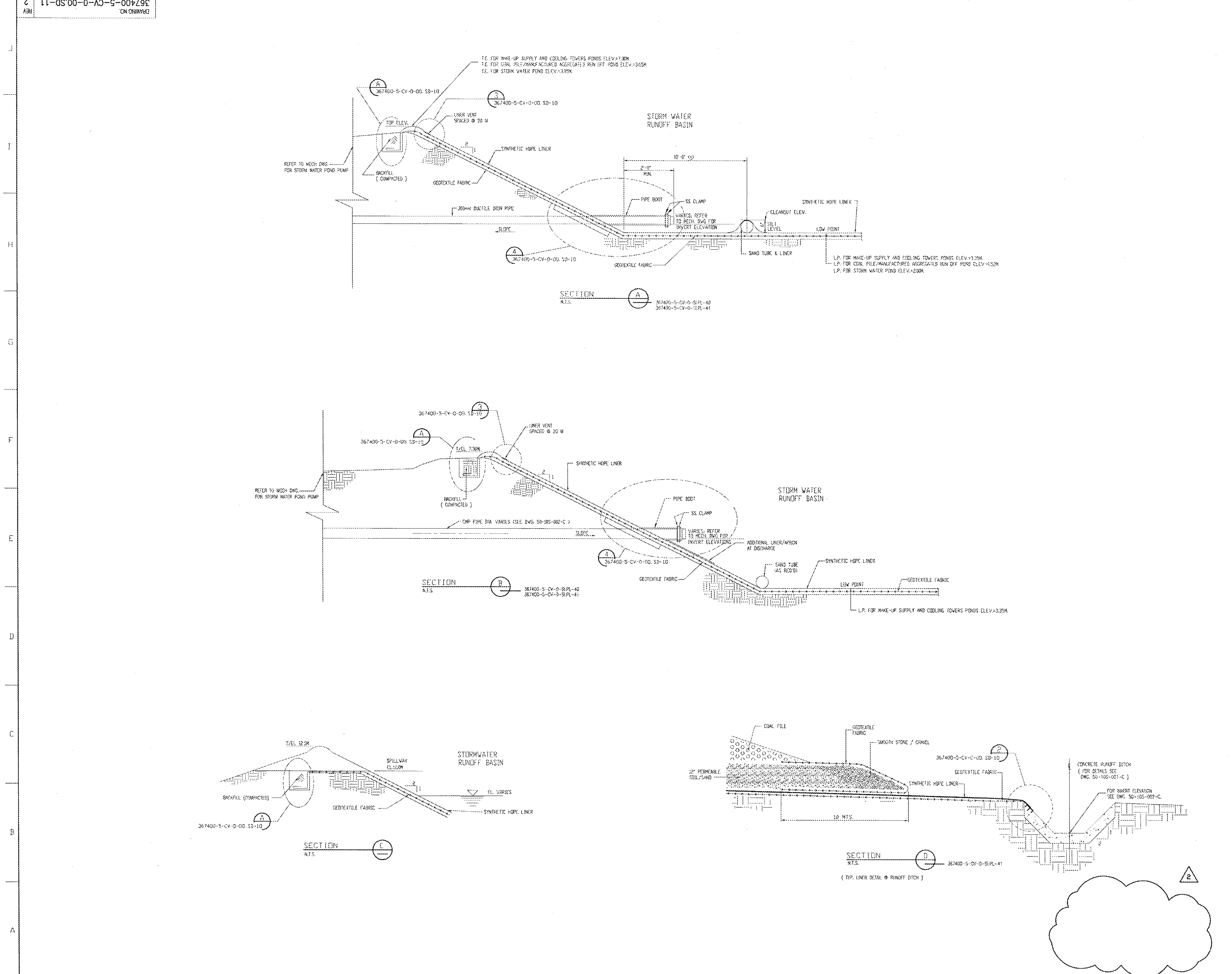

DRAWING NO. 367400-5-CV-0-00.SD-11 REV 2

OPDAES\2031\20\ACAD\BALANCE OF URBANIZATION\LINERDET2.DWG

REV	DATE	DESIGNED	CHECKED	CIVIL	ELEC	MECH	APPRD
2	04/16/01		R.F.M.	R.F.M.	L.F.R.		R.S.C.
	OPERABILITY REVIEW UP-DATE						
1	12/27/00	J.C.P.	R.F.M.	R.F.M.	L.F.R.	A.I.L.	R.S.C.
	GENERAL REVISION						
0	10/26/00	C.E.A.	R.F.M.	R.F.M.	L.F.R.	A.I.L.	R.S.C.
	ISSUED FOR CONSTRUCTION						

SEAL

APPROVED FOR CONSTRUCTION

DRAWN	C.E.A.	DATE	10/18/2000
DESIGNED	C.E.A.	DATE	10/12/2000
CHECKED	R.F.M.	DATE	10/18/2000
E. INSP.	L.F.R.	DATE	10/18/2000
C. INSP.	R.F.M.	DATE	10/18/2000
M. INSP.	A.I.L.	DATE	10/18/2000
APPR.	R.S.C.	DATE	10/19/2000

CARIBBEAN ARCHITECTS & ENGINEERS

A PART OF

DUKE FLUOR DANIEL
CARIBBEAN S. E.

AES PUERTO RICO

TOTAL ENERGY PLANT
GUAYAMA, PUERTO RICO

DRAWING TITLE
BALANCE OF URBANIZATION-LINER SECTION AND DETAILS NO.2

DRAWING NO. 367400-5-CV-0-00.SD-11 REV 2

SCALE: N.T.S.

ED_006328A_00009834-00001

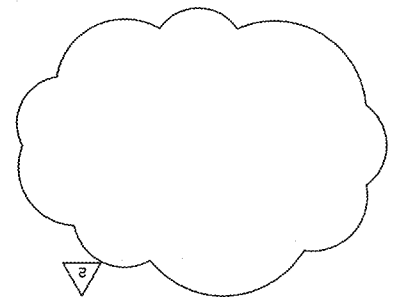

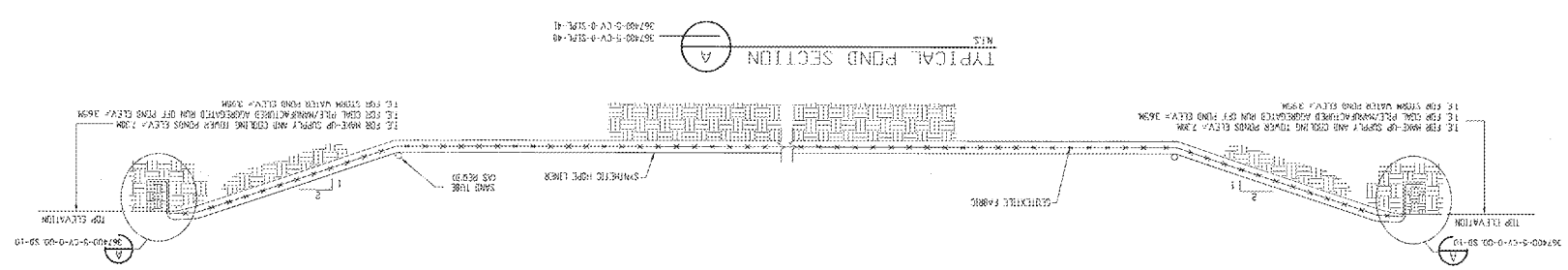

DRAWING NO. 367400-5-CV-0-00.SD-12 | REV 2

SCALE NTS

DRAWING NO. 367400-5-CV-0-00.SD-12 | REV 2

DRAWING TITLE

BALANCE OF URBANIZATION-
LINER SECTIONS AND
DETAILS NO.3

TOTAL ENERGY PLANT
GUAYAMA, PUERTO RICO

DUKE FLUOR DANIEL
CARIBBEAN S. E.

A PART OF

CARIBBEAN
ARCHITECTS & ENGINEERS

APPROVED FOR CONSTRUCTION

DRAWN	C.E.A.	DATE	10/19/2020
DESIGNED	C.E.A.	DATE	10/19/2020
CHECKED	R.F.M.	DATE	10/19/2020
E MGR	L.F.R.	DATE	10/19/2020
C MGR	R.F.M.	DATE	10/19/2020
M MGR	ALL	DATE	10/19/2020
APPR	R.S.C.	DATE	10/19/2020

SEAL

GENERAL REVISION

REV	DATE	DESIGNED	CHECKED	CHK	ELEC	MECH	APPROV
1	10/27/20	C.E.A.	R.F.M.	R.F.M.	L.F.R.	ALL	R.S.C.
2	10/19/20	C.E.A.	R.F.M.	R.F.M.	L.F.R.	ALL	R.S.C.

ISSUED FOR CONSTRUCTION

REV	DATE	DESIGNED	CHECKED	CHK	ELEC	MECH	APPROV
3	10/29/20	C.E.A.	R.F.M.	R.F.M.	L.F.R.	ALL	R.S.C.

OPERATIONAL REVIEW 10-30-2020

REV	DATE	DESIGNED	CHECKED	CHK	ELEC	MECH	APPROV
4	10/30/20	C.E.A.	R.F.M.	R.F.M.	L.F.R.	ALL	R.S.C.

REV	DATE	DESIGNED	CHECKED	CHK	ELEC	MECH	APPROV
5	10/30/20	C.E.A.	R.F.M.	R.F.M.	L.F.R.	ALL	R.S.C.

REV	DATE	DESIGNED	CHECKED	CHK	ELEC	MECH	APPROV
6	10/30/20	C.E.A.	R.F.M.	R.F.M.	L.F.R.	ALL	R.S.C.

REV	DATE	DESIGNED	CHECKED	CHK	ELEC	MECH	APPROV
7	10/30/20	C.E.A.	R.F.M.	R.F.M.	L.F.R.	ALL	R.S.C.

REV	DATE	DESIGNED	CHECKED	CHK	ELEC	MECH	APPROV
8	10/30/20	C.E.A.	R.F.M.	R.F.M.	L.F.R.	ALL	R.S.C.

REV	DATE	DESIGNED	CHECKED	CHK	ELEC	MECH	APPROV
9	10/30/20	C.E.A.	R.F.M.	R.F.M.	L.F.R.	ALL	R.S.C.

REV	DATE	DESIGNED	CHECKED	CHK	ELEC	MECH	APPROV
10	10/30/20	C.E.A.	R.F.M.	R.F.M.	L.F.R.	ALL	R.S.C.

REV	DATE	DESIGNED	CHECKED	CHK	ELEC	MECH	APPROV
11	10/30/20	C.E.A.	R.F.M.	R.F.M.	L.F.R.	ALL	R.S.C.

ED_006328A_00009835-00001

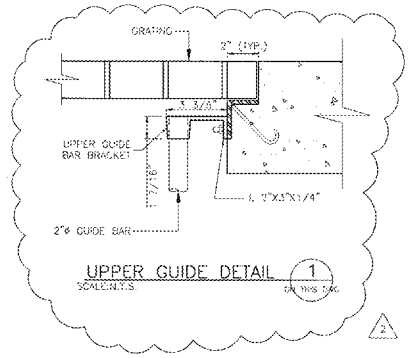

UPPER GUIDE DETAIL 1 ON THIS DWG
SCALE: N.T.S.

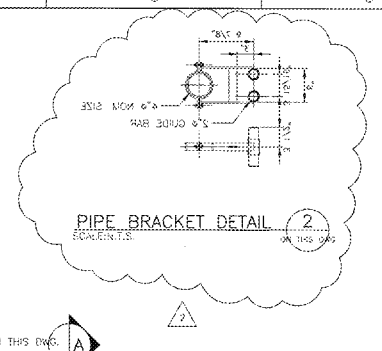

PIPE BRACKET DETAIL 2 ON THIS DWG
SCALE: N.T.S.

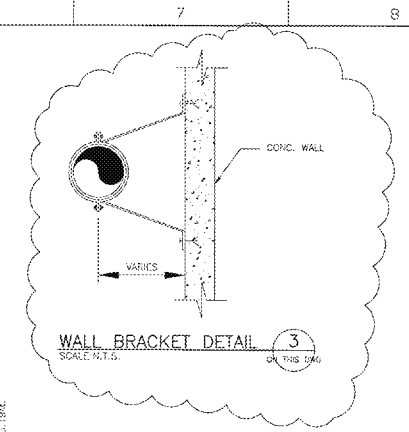

WALL BRACKET DETAIL 3 ON THIS DWG
SCALE: N.T.S.

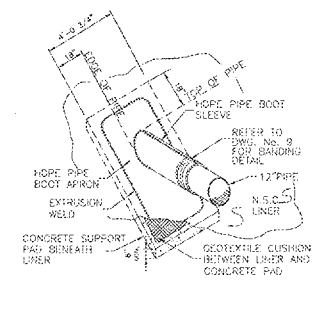

PIPE BOOT ISOMETRIC
N.T.S.

NOTES:

1. CONCRETE SURFACE TO BE STEEL TROWEL FINISHED WITH ROUNDED AND SMOOTHED EDGES.
2. SUGGESTED MINIMUM CONCRETE STRENGTH AND TIE OR AS RECOMMENDED BY THE DESIGN ENGINEER.

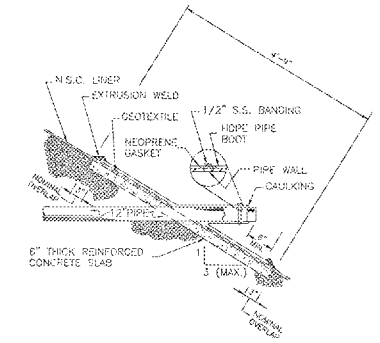

PIPE BOOT DETAIL
SINGLE LINER SYSTEM
N.T.S.

NOTES:

1. ALL CONCRETE SURFACES TO BE STEEL TROWEL FINISHED WITH ROUND AND SMOOTH EDGES.
2. SLOPES STEEPER THAN 3:1 SHOULD BE ANCHORED.

PIPE BOOT DETAIL 4 ON THIS DWG
SCALE: N.T.S.

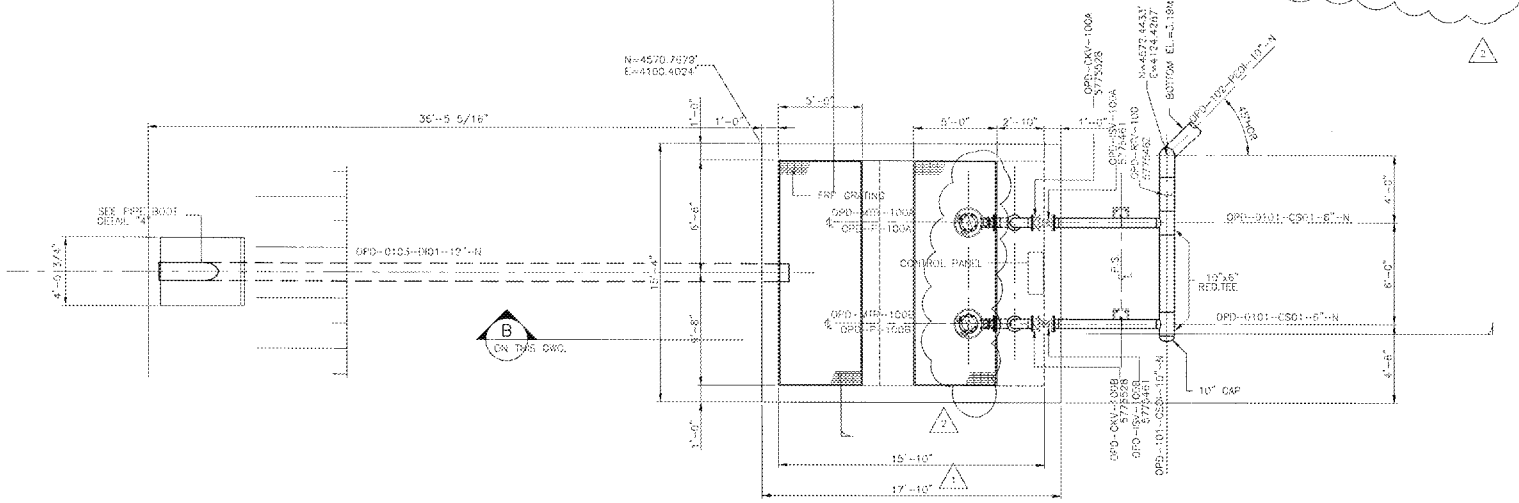

COAL PILE RUNOFF BASIN SUMP PUMP PLAN VIEW
SCALE: 1/4" = 1'-0"

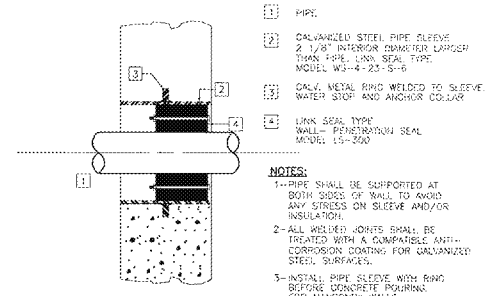

LEGEND:

1. PIPE.
2. GALVANIZED STEEL PIPE SLEEVE 2 1/8" INTERIOR DIAMETER LARGER THAN PIPE. LINK SEAL TYPE MODEL WS-4-23-S-6
3. GALV. METAL RING WELDED TO SLEEVE WATER STOP AND ANCHOR COLLAR
4. LINK SEAL TYPE WALL- PENETRATION SEAL MODEL LS-200

NOTES:

1- PIPE SHALL BE SUPPORTED AT BOTH SIDES OF WALL TO AVOID ANY STRESS ON SLEEVE AND/OR INSULATION.
2- ALL WELDED JOINTS SHALL BE TREATED WITH A COMPATIBLE ANTI-CORROSION COATING FOR GALVANIZED STEEL SURFACES.
3- INSTALL PIPE SLEEVE WITH RING BEFORE CONCRETE POURING FOR MASONRY WALLS.

MODEL	TYPE	SEAL ELEMENT	PRESSURE PLATES	BOLTS & NUTS	TEPERATURE RANGE (°F)	
O	OIL RESISTANT	NITRILE GREEN	CARBONATE	316TEL RING DICHROMATE	-40 TO + 210	NITRILE RUBBER IS RESISTANT TO OILS, FUEL AND MANY SOLVENTS

PIPE PENETRATION
THRU WATER PROOFED WALL DETAIL 5 ON THIS DWG
SCALE: N.T.S.

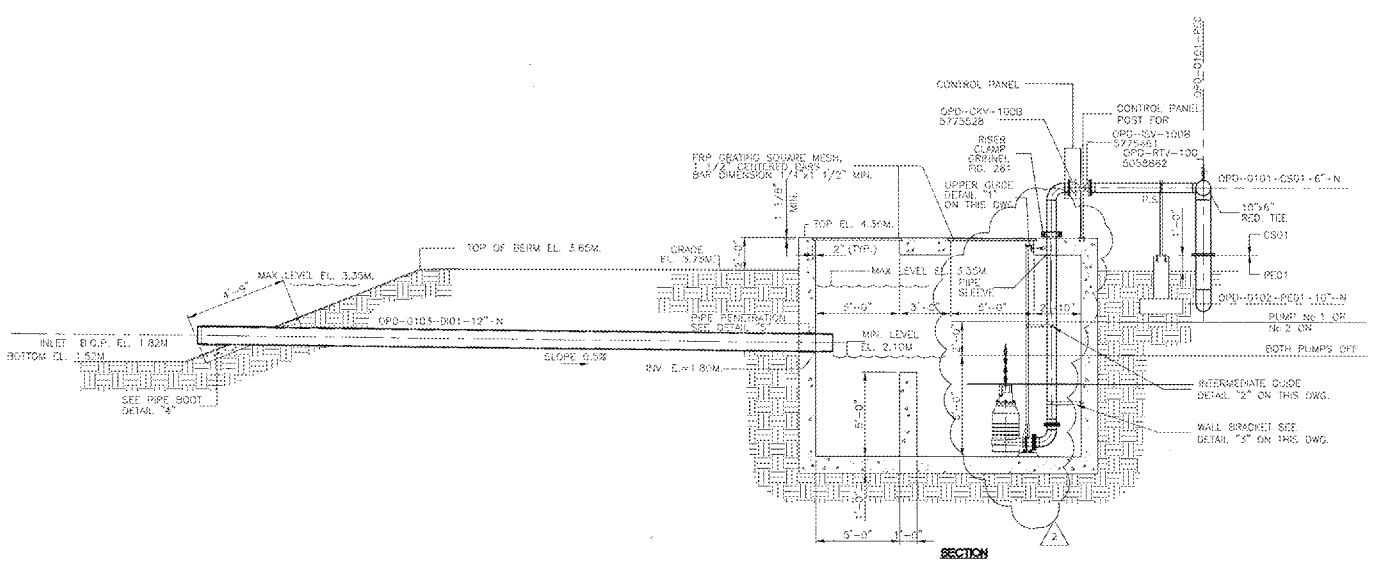

COAL PILE RUN OFF PUND BASIN PUMPS CROSS SECTION B ON THIS DWG
SCALE: 1/4" = 1'-0"

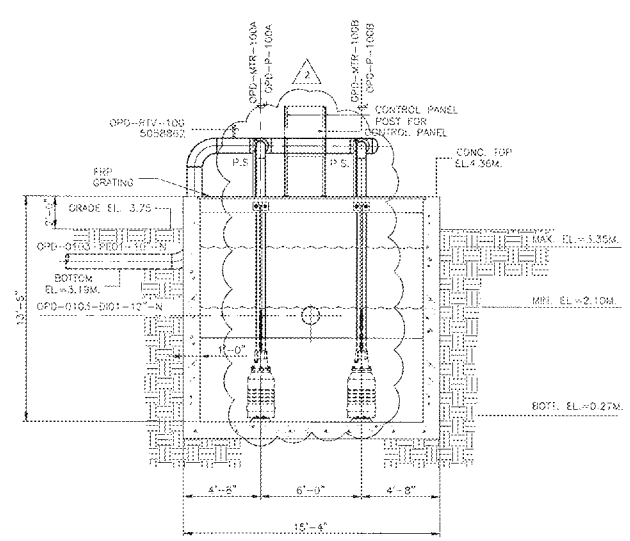

COAL PILE RUNOFF BASIN SUMP PUMP CROSS SECTION A ON THIS DWG
SCALE: 1/4" = 1'-0"

REV	DATE	DESIGNED	CHECKED	CIVIL	ELEC	MECH	APPRO
REVISED PUMP SUMP DETAILS							
1	11/29/99	LAS	ALL	R.M	L.F.R	ALL	R.S.C
GENERAL REVISION							
1	11/29/99	LAS	ALL	R.M	L.F.R	ALL	R.S.C
APPROVED FOR CONSTRUCTION							
0	11/29/99	LAS	ALL	R.M	L.F.R	ALL	R.S.C

SEAL

APPROVED FOR CONSTRUCTION

DRAWN	G.M.F.	DATE: 06/11/99
DESIGNED	A.L.S.	DATE: 06/11/99
CHECKED	A.L.S.	DATE: 06/11/99
E INSP.	L.F.R.	DATE: 07/12/99
C INSP.	R.F.M.	DATE: 07/12/99
M INSP.	A.L.S.	DATE: 07/12/99
APPR.	R.S.C.	DATE: 07/12/99

CARIBBEAN ARCHITECTS & ENGINEERS
PO BOX 363609 - SAN JUAN, PUERTO RICO 00936-3609

A PART OF

DUKE FLUOR DANIEL
CARIBBEAN S.E.

AES PUERTO RICO

TOTAL ENERGY PLANT
GUAYAMA, PUERTO RICO

DRAWING TITLE

COAL PILE RUNOFF BASIN
SUMP PUMP STATION

DRAWING NO. 367400-5-PY-5-00-SP-00-2 REV 2

SCALE: 1/4" = 1'-0"

ED_006328A_00009836-00001

Message

From: Lisa Evans [levans@earthjustice.org]
Sent: 4/19/2021 7:46:56 PM
To: Huggins, Richard [Huggins.Richard@epa.gov]; Guerrero, Carmen [guerrero.carmen@epa.gov]
CC: Jose Rivera [rstgo2@gmail.com]; mozaeta@earthjustice.org; larroyo@earthjustice.org
Subject: Administrative Complaint re AES-PR Construction Permit and Corrective Action
Attachments: f.Exhibit 1 - Sahu Report.pdf; f.Exhibit 2 - AES EPA Consent.pdf; f.Exhibit 3 - AES AOC -EPA Administrative Order On Consent.pdf; f.Exhibit 4 - Email submission - Comments and Request for Denial of Construc....pdf; Final - Adm. Complaint AES Liner Construction project .pdf

Dear Richard:
Attached please find an Administrative Complaint filed with the Permits Management Office, Department of Economic Development and Commerce by Ruth Santiago of Comité Diálogo Ambiental, Inc. (cc'd) and Earthjustice on behalf of nine public interest groups in Puerto Rico. I have also copied Ms. Carmen R. Guerrero Pérez, Director, Caribbean Environmental Protection Division on this email.

We are hoping to have the opportunity to speak with EPA soon regarding this important matter. Our analysis of AES-PR's proposed remedial action, for which AES-PR has received construction permits, concludes that the action is not compliant with the federal CCR rule and will result in continued releases of hazardous CCR contaminants.

We appreciate in advance your consideration of the issues raised in the attached compliant and technical report. We look forward to hearing from you and to scheduling a call at your convenience.

Sincerely,
Lisa Evans

Lisa Evans
Senior Counsel
Earthjustice
21 Ocean Ave.
Marblehead, MA 01945
T: (781) 631-4119
C: Ex. 6 Personal Privacy (PP)
www.earthjustice.org

Exhibit 1

Comments on the Liner Proposed for AES, Puerto Rico

A. Introduction

AES Puerto Rico operates a coal-fired power plant in Guayama, Puerto Rico. Coal ash, including bottom ash, fly ash, and other combustion residuals (CCR) such as bed ash and wastes from its flue gas desulfurization system have historically been accumulated onsite. The site plan for the plant and the location of its CCR disposal area (in green oval) are shown in the figure below. AES markets the CCR as "Agremax." According to AES, Agremax is a combination of bottom ash and fly ash that is hydrated, dried and sized to simulate aggregate construction materials. However, inspection reports and photographs show that the Agremax pile can and does emit fugitive dust.

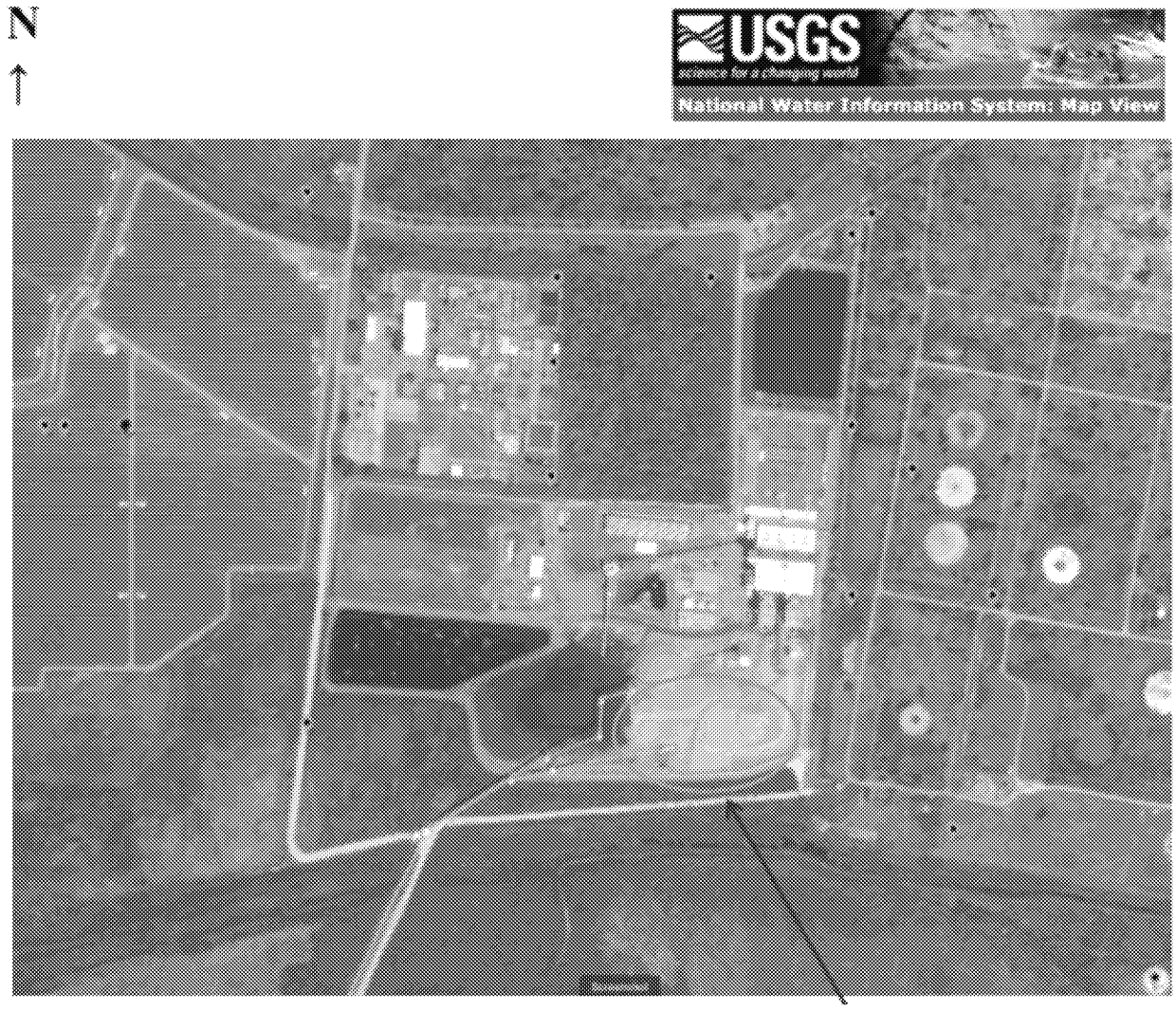

The CCR disposal area has historically been unlined (i.e., did not have a liner under the Agremax and CCR pile) and CCR has been accumulated by placement directly on the ground. Undoubtedly this has caused contamination of the soils that come into contact with the CCR as well as contamination of the groundwater, which is very shallow in the area. As part of its remediation activities AES has proposed constructing a new waste pile by first placing a composite liner on the same footprint as its current CCR waste site, and then continuing to accumulate its CCR on the lined area. AES has stated that it intends to excavate 4-6 feet of contaminated soils.[1] Construction of the lined area would be achieved in two phases, first by moving the accumulated CCR to one side followed by excavation and liner placement on the vacant side; repeating the process on the other side of the CCR pile.

The detail of the composite line that will be used is shown below, taken from one of AES's drawings.

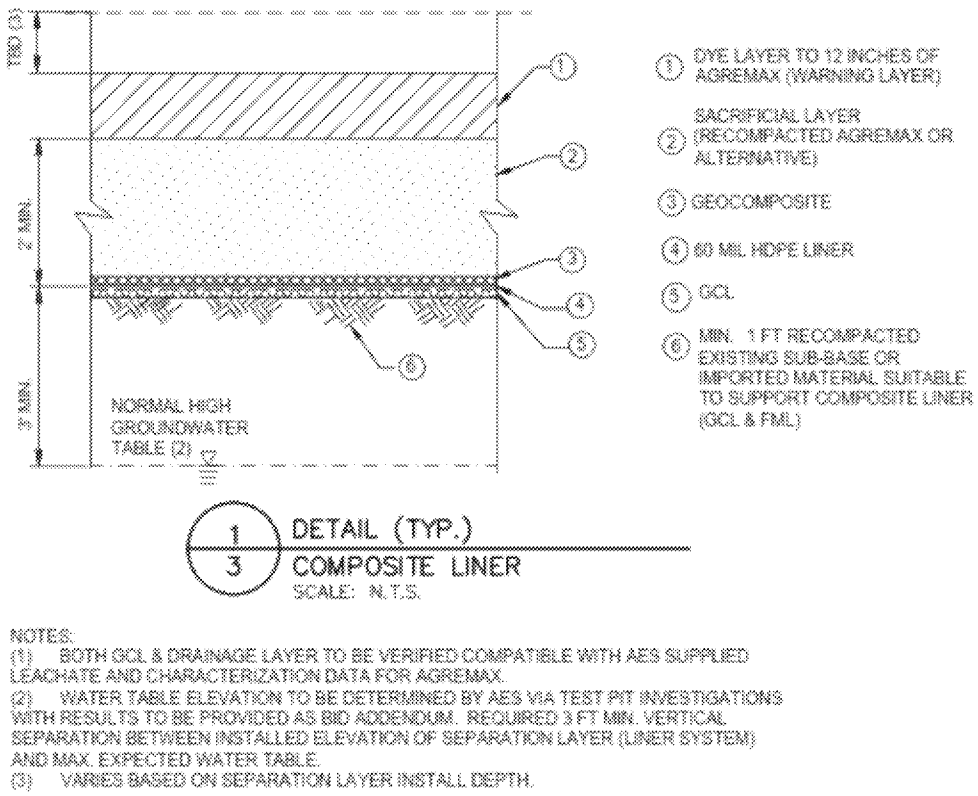

NOTES:
(1) BOTH GCL & DRAINAGE LAYER TO BE VERIFIED COMPATIBLE WITH AES SUPPLIED LEACHATE AND CHARACTERIZATION DATA FOR AGREMAX.
(2) WATER TABLE ELEVATION TO BE DETERMINED BY AES VIA TEST PIT INVESTIGATIONS WITH RESULTS TO BE PROVIDED AS BID ADDENDUM. REQUIRED 3 FT MIN. VERTICAL SEPARATION BETWEEN INSTALLED ELEVATION OF SEPARATION LAYER (LINER SYSTEM) AND MAX. EXPECTED WATER TABLE.
(3) VARIES BASED ON SEPARATION LAYER INSTALL DEPTH.

Note that the depth of groundwater shown in the cross section above is 3 feet, which is very shallow and which calls into question AES' compliance with the location requirements of the federal CCR

[1] However, how this will be done where groundwater is encountered, is not discussed. As noted, AES itself notes that depth to groundwater can be as little as 3 feet.

rule (40 CFR Part 257, subpart D). In addition, while the composite liner shown above contains the elements or layers that are typically found in a composite liner, the effectiveness of the liner and the proposed remedial scheme depend on several details that are not fully discussed or provided in the documents. They are discussed below. I note that AES proposed to use Agremax, the CCR waste itself as part of the initial layers on top of the liner.

B. Comments

1. AES Violates the Prohibition of Placement Above the Uppermost Aquifer

As shown in the above figure, the proposed new liner for the waste pile will be only 3 feet above the groundwater table. Pursuant to 40 C.F.R. § 257.60(a), waste piles must be constructed with a base that is located no less than 1.52 meters (five feet) above the upper limit of the uppermost aquifer. Clearly, by AES' own admission, the liner does not meet this standard. AES has also failed to demonstrate that there will not be an intermittent, recurring, or sustained hydraulic connection between any portion of the base of the CCR unit and the uppermost aquifer due to normal fluctuations in groundwater elevations (including the seasonal high water table), as required by the regulation. Section 257.60(b) requires a certification from a qualified professional engineer stating that the demonstration meets the regulatory requirements. No such certification has been submitted.

2. Extent and Thoroughness of Removal of Historical CCR Contaminated Soils Is Not Clear.

As noted prior, historically, CCR was accumulated on the same footprint where the liner will be placed. It is a certainty that underlying soils in the area were therefore impacted. The fate of these previously impacted soils is not entirely clear. If some of these soils are proposed to be removed, which would be necessary to a certain point in order to create the proper, graded subsurface in order to enable liner placement, the depth of soil removal should be thoroughly documented. In particular, if contaminated soils are being left under the liner (i.e., not being removed) the locations of such areas and the characterization of the soils to be left in place should be provided. It cannot simply be assumed that because the proposed liner will cap these soils that they will therefore never be a future source of groundwater migration. There is always the potential that liners can leak due to a combination of many factors including material defects, incompatibility with the waste materials, poor construction and the like, thereby mobilizing contaminants left in the soils below the liner. If, on the other hand, AES's intent is to remove all previously contaminated soils from the footprint before placing the liner, the effectiveness of this removal (i.e., showing that all such soils have been removed) via sampling, should be documented and provided, especially given the very shallow depth to groundwater.

3. Compatibility Testing Was Not Conducted for Agremax

As is customary, liner elements are selected in order to be compatible with the wastes that will be managed. AES has provided the following test results of its compatibility testing, excerpted below.

Test Results:

	AES Bottom Ash	AES Fly Ash	AES Gypsum
CG-50 FS (ASTM D5890)	13	14	15
CG-50 FL (ASTM D5891)	332	31	227
Chloride Content	487	945	0
pH	12.457	11.232	12.465
EC (µC/cm)	11070	6600	8210
Predicted Values			
Ionic Strength (mol/L)	0.15	0.10	0.10
RMD M^0.5	0.05	0.76	0.001
Kolstad Predicted K (cm/s)	2.40 x 10E-07	2.1 x 10E-08	1.1 x 10E-07

However, while the tests above document that certain compatibility tests were conducted, the wastes used were the bottom ash, fly ash, and gypsum (which is created in its flue gas desulfurization control process). Missing is Agremax, whose composition is different from these three wastes. It is not clear if liner compatibility tests were conducted using Agremax or not. Since it is assumed that Agremax may also be disposed of in the lined unit, it is important that compatibility tests also be done using this waste. This should be clarified.

4. *Compositions of the Wastes That Were Tested are Different Than Current Compositions.*

As part of its liner materials, AES provides the table below showing the compositions of the three materials it used in its testing – namely bottom ash, fly ash, and gypsum.

CETCO Lining Technologies 2870 Forbs Avenue Hoffman Estates
847.851.1800 800.527.9948 Fax 847.851.1899 www

ICP Elemental Analysis

Element	AES bottom Ash	AES Fly Ash	AES gypsum
Silver	0	0	0
Aluminum	7.983	2.35	6.732
Arsenic*	0	0	0
Barium	1.212	0.0042	1.227
Calcium	1971	270.4	1461
Cadmium	0	0	0
Chromium	0.0673	0.045	0.0673
Copper	0	0	0
Iron*	0	0	0
Mercury*	0	0	0
Potassium	44.42	178.9	6.149
Magnesium	0	0.3975	0
Sodium	205.1	1350	0
Nickel	0	0	0
Phosphorus	0	0	0
Lead*	0	0	0
Selenium*	0.0788	0	0
Zinc	0	0	0
Lead*	0	0	0
Sulfur	679.5	662.6	399
Antimony	0	0	0
Titanium	0	0	0
Zinc	0	0	0
Zircon	0	0	0.009

1) Accuracy is ±0.005 ppm except for arsenic, iron, mercury, lead and selenium which have accuracy limits of 0.02 ppm.
2) The sample was diluted 1:99 prior to testing and the results scaled up by 100x.

It is presumed that the units of measure are in parts per million (i.e., mg/kg) given the Note 1 below the table. Note, in particular (and as examples) the concentrations of various metals shown as zero. As the excerpted table for AES bottom and fly ash shows, the reported concentrations for almost all of the metals such as arsenic, cadmium, copper, iron, mercury, nickel, and lead are

shown as zero, meaning less than 0.02 ppm or 0.005 ppm depending on the metal, per Note 1 following the table. This is not credible and indicates that the analysis is likely flawed and therefore unreliable. It is concerning that this characterization of the wastes was used/might have been used for liner compatibility analysis. A thorough explanation should be provided.

Note also the levels of calcium, magnesium, and potassium in the different wastes above. I selected these elements because they can potentially adversely affect the liner materials (particularly the clays that are proposed to be used). I compare these with the characterization data conducted in 2018 on fly and bottom ash (and Agremax) in the three tables below. It is readily apparent that the reported levels of calcium, magnesium, and potassium from the 2018 tests are quite different and much higher than the levels reported in the liner compatibility studies as shown in the table earlier. For example, the calcium level in fly ash in the 2018 test below is 345,775 mg/kg, while the 2015 result is 270.4 ppm in the table above. Similar differences for each of calcium, magnesium, and potassium are readily confirmed comparing the 2018 tests and the 2015 test. This should be explained and addressed because high levels of these constituents can adversely affect the clay in the GCL.

LAB. SAMPLE ID: BEL-1802527
SAMPLE COLLECTED BY: C. González (Client)
DATE RECEIVED: 07/11/18
MATRIX: Solid

DESCRIPTION: Fly Ash
SAMPLE DATE: 07/10/18
SAMPLE TIME: 2:00PM
LAB. FILE ID: 1802527

PARAMETER	METHOD	SAMPLE TYPE	UNITS	BEL-1802527 RESULT	MDL	ANALYST	DATE ANALYZED
Aluminum	SW 846 6010 C	Grab	mg/Kg	28,983	357.	BTR	08/27/18
Antimony	SW 846 6010 C	Grab	mg/Kg	4.84	0.528	BTR	08/15/18
Arsenic	SW 846 6010 C	Grab	mg/Kg	17.4	0.179	HS	08/06/18
Barium	SW 846 6010 C	Grab	mg/Kg	515	0.279	BTR	08/15/18
Beryllium	SW 846 6010 C	Grab	mg/Kg	1.77	0.199	HS	08/06/18
Bismuth[NN]	SW 846 6010 C	Grab	mg/Kg	<0.309	0.309	BTR	08/24/18
Boron	SW 846 6010 C	Grab	mg/Kg	109	4.39	HS	08/06/18
Cadmium	SW 846 6010 C	Grab	mg/Kg	2.13	0.100	HS	08/06/18
Calcium	SW 846 6010 C	Grab	mg/Kg	345,775	15.4[1]	HS	08/14/18
Chromium	SW 846 6010 C	Grab	mg/Kg	28.7	0.378	HS	08/06/18
Chromium VI[NN]	SW 846 7196A	Grab	mg/Kg	<5.00	5.00	BTR	07/17/18-3:01PM
Cobalt	SW 846 6010 C	Grab	mg/Kg	10.4	0.100	HS	08/06/18
Copper	SW 846 6010 C	Grab	mg/Kg	50.8	0.358	BTR	08/15/18
Iron	SW 846 6010 C	Grab	mg/Kg	15,159	3.11	HS	08/14/18
Lead	SW 846 6010 C	Grab	mg/Kg	<10.9	10.9[2]	HS	08/06/18
Lithium	SW 846 6010 C	Grab	mg/Kg	34.8	0.478	BTR	08/15/18
Magnesium	SW 846 6010 C	Grab	mg/Kg	3,510	5.93	HS	08/14/18
Manganese	SW 846 6010 C	Grab	mg/Kg	179	0.438	HS	08/14/18
Mercury	SW 846 7471B	Grab	mg/Kg	0.2986	0.0099	HS	08/01/18
Molybdenum	SW 846 6010 C	Grab	mg/Kg	11.2	0.388	BTR	08/15/18
Nickel	SW 846 6010 C	Grab	mg/Kg	26.9	0.239	HS	08/06/18
Potasium[NN]	SW 846 6010 C	Grab	mg/Kg	5,910	35.8	HS	08/14/18
Selenium	SW 846 6010 C	Grab	mg/Kg	23.7	0.169	HS	08/06/18
Silicon[NN]	SW 846 6010 C	Grab	mg/Kg	66.6	49.8	HS	08/14/18
Silver	SW 846 6010 C	Grab	mg/Kg	<0.249	0.249	HS	08/06/18
Sodium	SW 846 6010 C	Grab	mg/Kg	9,148	34.6	HS	08/14/18
Strontium	SW 846 6010 C	Grab	mg/Kg	327	0.100	HS	08/06/18
Thallium	SW 846 6010 C	Grab	mg/Kg	<0.348	0.348	BTR	08/15/18
Tin	SW 846 6010 C	Grab	mg/Kg	3.78	0.499	BTR	08/27/18
Titanium	SW 846 6010 C	Grab	mg/Kg	709	0.139	HS	08/06/18
Vanadium	SW 846 6010 C	Grab	mg/Kg	106	0.309	HS	08/06/18
Zinc	SW 846 6010 C	Grab	mg/Kg	69.9	2.44	HS	08/06/18

[1]Dilution Factor: 25 [2]Dilution Factor: 50

LAB. SAMPLE ID: BEL-1802528
SAMPLE COLLECTED BY: Carlos González (Client)
DATE RECEIVED: 07/11/18
MATRIX: Solid

DESCRIPTION: Bottom Ash
SAMPLE DATE: 07/10/18
SAMPLE TIME: 2:00PM
LAB. FILE ID: 1802528

PARAMETER	METHOD	SAMPLE TYPE	UNITS	BEL-1802528 RESULT	MDL	ANALYST	DATE ANALYZED
Aluminum	SW 846 6010 C	Grab	mg/Kg	23,946	143.[1]	BTR	08/15/18
Antimony	SW 846 6010 C	Grab	mg/Kg	1.60	0.528	BTR	08/15/18
Arsenic	SW 846 6010 C	Grab	mg/Kg	43.2	0.179	BTR	08/15/18
Barium	SW 846 6010 C	Grab	mg/Kg	671	0.279	BTR	08/15/18
Beryllium	SW 846 6010 C	Grab	mg/Kg	1.09	0.199	BTR	08/15/18
Bismuth[NN]	SW 846 6010 C	Grab	mg/Kg	0.727	0.309	BTR	08/24/18
Boron	SW 846 6010 C	Grab	mg/Kg	256	4.39	BTR	08/15/18
Cadmium	SW 846 6010 C	Grab	mg/Kg	0.309	0.100	BTR	08/15/18
Calcium	SW 846 6010 C	Grab	mg/Kg	565,192	11.9[2]	HS	08/14/18
Chromium	SW 846 6010 C	Grab	mg/Kg	25.3	0.379	BTR	08/15/18
Chromium VI[NN]	SW 846 7196A	Grab	mg/Kg	<5.00	5.00	BTR	08/17/18-2:49PM
Cobalt	SW 846 6010 C	Grab	mg/Kg	10.7	0.100	BTR	08/15/18
Copper	SW 846 6010 C	Grab	mg/Kg	6.73	0.359	BTR	08/15/18
Iron	SW 846 6010 C	Grab	mg/Kg	17,661	31.1[1]	BTR	08/15/18
Lead	SW 846 6010 C	Grab	mg/Kg	<2.19	2.19[1]	BTR	08/15/18
Lithium	SW 846 6010 C	Grab	mg/Kg	12.9	0.478	BTR	08/15/18
Magnesium	SW 846 6010 C	Grab	mg/Kg	3,386	5.94	HS	08/14/18
Manganese	SW 846 6010 C	Grab	mg/Kg	251	0.438	BTR	08/15/18
Mercury	SW 846 7471B	Grab	mg/Kg	<0.0095	0.0095	HS	08/01/18
Molybdenum	SW 846 6010 C	Grab	mg/Kg	14.1	0.388	BTR	08/15/18
Nickel	SW 846 6010 C	Grab	mg/Kg	31.0	0.239	BTR	08/15/18
Potassium[NN]	SW 846 6010 C	Grab	mg/Kg	1,511	35.8	HS	08/14/18
Selenium	SW 846 6010 C	Grab	mg/Kg	<0.169	0.169	BTR	08/15/18
Silicon[NN]	SW 846 6010 C	Grab	mg/Kg	49.8	49.8	HS	08/14/18
Silver	SW 846 6010 C	Grab	mg/Kg	<0.249	0.249	BTR	08/15/18
Sodium	SW 846 6010 C	Grab	mg/Kg	2,873	34.6	HS	08/14/18
Strontium	SW 846 6010 C	Grab	mg/Kg	317	0.100	BTR	08/15/18
Thallium	SW 846 6010 C	Grab	mg/Kg	<0.349	0.349	BTR	08/15/18
Tin	SW 846 6010 C	Grab	mg/Kg	1.95	0.498	BTR	08/15/18
Titanium	SW 846 6010 C	Grab	mg/Kg	997	0.139	BTR	08/15/18
Vanadium	SW 846 6010 C	Grab	mg/Kg	107	0.309	BTR	08/15/18
Zinc	SW 846 6010 C	Grab	mg/Kg	40.5	2.44	BTR	08/15/18

[1]Dilution Factor: 10 [2]Dilution Factor: 20

And, as noted earlier, the liner compatibility tests simply did not include Agremax. That should be done. Until that compatibility is assured, the proposed liner materials cannot simply be assumed to be compatible. The presence of high levels of calcium, potassium, magnesium as noted previously need to be carefully evaluated so that they do not adversely affect the bentonite clay. The composition of Agremax, as seen in the 2018 testing is provided below, for illustrative purposes.

LAB. SAMPLE ID: BEL-1802526
SAMPLE COLLECTED BY: Carlos González (Client)
DATE RECEIVED: 07/11/18
MATRIX: Solid

DESCRIPTION: Agremax
SAMPLE DATE: 07/10/18
SAMPLE TIME: 2:00PM
LAB. FILE ID: 1802526

PARAMETER	METHOD	SAMPLE TYPE	UNITS	BEL-1802526 RESULT	MDL	ANALYST	DATE ANALYZED
Aluminum	SW 846 6010 C	Grab	mg/Kg	35,467	241.[1]	BTR	08/15/18
Antimony	SW 846 6010 C	Grab	mg/Kg	5.84	0.892	BTR	08/15/18
Arsenic	SW 846 6010 C	Grab	mg/Kg	15.0	0.303	BTR	08/15/18
Barium	SW 846 6010 C	Grab	mg/Kg	1,106	0.471	BTR	08/15/18
Beryllium	SW 846 6010 C	Grab	mg/Kg	1.90	0.337	BTR	08/15/18
Bismuth[NN]	SW 846 6010 C	Grab	mg/Kg	<0.522	0.522	BTR	08/24/18
Boron	SW 846 6010 C	Grab	mg/Kg	139	7.42	BTR	08/15/18
Cadmium	SW 846 6010 C	Grab	mg/Kg	1.46	0.168	BTR	08/15/18
Calcium	SW 846 6010 C	Grab	mg/Kg	278,961	12.4[2]	HS	08/14/18
Chromium	SW 846 6010 C	Grab	mg/Kg	26.6	0.639	BTR	08/15/18
Chromium VI[NN]	SW 846 7196A	Grab	mg/Kg	<8.40	8.40[3]	BTR	07/17/18-2:58PM
Cobalt	SW 846 6010 C	Grab	mg/Kg	8.87	0.168	BTR	08/15/18
Copper	SW 846 6010 C	Grab	mg/Kg	57.0	0.606	BTR	08/15/18
Iron	SW 846 6010 C	Grab	mg/Kg	18,003	52.5[1]	BTR	08/15/18
Lead	SW 846 6010 C	Grab	mg/Kg	<3.70	3.70[1]	BTR	08/15/18
Lithium	SW 846 6010 C	Grab	mg/Kg	44.7	0.808	BTR	08/15/18
Magnesium	SW 846 6010 C	Grab	mg/Kg	5,416	10.0	HS	08/14/18
Manganese	SW 846 6010 C	Grab	mg/Kg	194	0.740	BTR	08/15/18
Mercury	SW 846 7471B	Grab	mg/Kg	0.3725	0.0167	HS	08/01/18
Molybdenum	SW 846 6010 C	Grab	mg/Kg	4.32	0.656	BTR	08/15/18
Nickel	SW 846 6010 C	Grab	mg/Kg	30.1	0.404	BTR	08/15/18
Potassium[NN]	SW 846 6010 C	Grab	mg/Kg	4,221	60.5	HS	08/14/18
Selenium	SW 846 6010 C	Grab	mg/Kg	18.7	0.286	BTR	08/15/18
Silicon[NN]	SW 846 6010 C	Grab	mg/Kg	170	84.1	HS	08/14/18
Silver	SW 846 6010 C	Grab	mg/Kg	<0.421	0.421	BTR	08/15/18
Sodium	SW 846 6010 C	Grab	mg/Kg	7,245	58.5	HS	08/14/18
Strontium	SW 846 6010 C	Grab	mg/Kg	447	0.168	BTR	08/15/18
Thallium	SW 846 6010 C	Grab	mg/Kg	<0.589	0.589	BTR	08/15/18
Tin	SW 846 6010 C	Grab	mg/Kg	3.77	0.841	BTR	08/15/18
Titanium	SW 846 6010 C	Grab	mg/Kg	1,034	0.236	BTR	08/15/18
Vanadium	SW 846 6010 C	Grab	mg/Kg	96.6	0.522	BTR	08/15/18
Zinc	SW 846 6010 C	Grab	mg/Kg	52.7	4.12	BTR	08/15/18

[1]Dilution Factor: 10 [2]Dilution Factor: 20 [3]Dilution Factor: 5

5. *Liner Placement Construction Quality Assurance Documents Were Not Provided*

The performance of any liner system depends not only on the liner materials and their selection and their compatibility with the wastes that will be handled, but, importantly on the construction details of how the subsurface will be prepared and how the various layers of the composite liner will be placed. This includes the various steps to make sure that the liner materials: (i) are properly evaluated at the factory where they are made before they are accepted; (ii) are not damaged during transit and are under proper custody at all times; and (iii) are properly stored when they arrive at the site before placement. In addition, the manner in which they are placed and sealed in place to make sure that there is proper overlap between the seams and that there are no gaps is obviously important to prevent leaks and migration of leachate into the soils below the liner and then on to groundwater. All of these construction and construction quality assurance documents are required

but those materials were not submitted to the agency and are not available for public review. Therefore, it is not possible to provide an evaluation of these important documents.

In conclusion, there are significant unanswered questions that need to be addressed before this liner can be approved. These include questions relating to the liner components and their compatibility with the wastes that will be accumulated on the liner. Additional questions remain relating to the preparation of the sub-surface before placement of the liner including the extent to which previously contaminated soils will remain in place or how it will be verified that all contaminated soils are removed, especially given the very shallow depth to groundwater in the area. As noted, construction of the liner so close to groundwater cannot protect against contaminant migration and achieve adequate source control. And, lastly, no construction details, which are essential to ensuring that the liner will be effective, are provided. These deficiencies must be corrected, and the additional materials made available to the public for review before any approval is contemplated.

Date: April 8, 2021

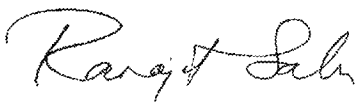

Dr. Ranajit Sahu. Consultant

ED_006328A_00019660-00011

RESUME

RANAJIT (RON) SAHU, Ph.D, QEP, CEM (Nevada)

CONSULTANT, ENVIRONMENTAL AND ENERGY ISSUES

311 North Story Place
Alhambra, CA 91801
Phone: 702.683.5466
e-mail (preferred): ronsahu@gmail.com; sahuron@earthlink.net

EXPERIENCE SUMMARY

Dr. Sahu has over thirty one years of experience in the fields of environmental, mechanical, and chemical engineering including: program and project management services; design and specification of pollution control equipment for a wide range of emissions sources including stationary and mobile sources; soils and groundwater remediation including landfills as remedy; combustion engineering evaluations; energy studies; multimedia environmental regulatory compliance (involving statutes and regulations such as the Federal CAA and its Amendments, Clean Water Act, TSCA, RCRA, CERCLA, SARA, OSHA, NEPA as well as various related state statutes); transportation air quality impact analysis; multimedia compliance audits; multimedia permitting (including air quality NSR/PSD permitting, Title V permitting, NPDES permitting for industrial and storm water discharges, RCRA permitting, etc.), multimedia/multi-pathway human health risk assessments for toxics; air dispersion modeling; and regulatory strategy development and support including negotiation of consent agreements and orders.

He has over twenty eight years of project management experience and has successfully managed and executed numerous projects in this time period. This includes basic and applied research projects, design projects, regulatory compliance projects, permitting projects, energy studies, risk assessment projects, and projects involving the communication of environmental data and information to the public.

He has provided consulting services to numerous private sector, public sector and public interest group clients. His major clients over the past twenty six years include various trade associations as well as individual companies such as steel mills, petroleum refineries, chemical plants, cement manufacturers, aerospace companies, power generation facilities, lawn and garden equipment manufacturers, spa manufacturers, chemical distribution facilities, land development companies, and various entities in the public sector including EPA, the US Dept. of Justice, several states (including Oregon, New Mexico, Pennsylvania, and others), various agencies such as the California DTSC, and various municipalities. Dr. Sahu has performed projects in all 50 states, numerous local jurisdictions and internationally.

In addition to consulting, for approximately twenty years, Dr. Sahu taught numerous courses in several Southern California universities including UCLA (air pollution), UC Riverside (air pollution, process hazard analysis), and Loyola Marymount University (air pollution, risk assessment, hazardous waste management). He also taught at Caltech, his alma mater (various engineering courses), at the University of Southern California (air pollution controls) and at California State University, Fullerton (transportation and air quality).

Dr. Sahu has and continues to provide expert witness services in a number of environmental areas discussed above in both state and Federal courts as well as before administrative bodies (please see Annex A).

EXPERIENCE RECORD

2000-present **Independent Consultant.** Providing a variety of private sector (industrial companies, land development companies, law firms, etc.), public sector (such as the US Department of Justice), and public interest group clients with project management, environmental consulting, project management, as well as regulatory and engineering support consulting services.

1995-2000 Parsons ES, **Associate, Senior Project Manager and Department Manager for** Air Quality/Geosciences/Hazardous Waste Groups, Pasadena. Responsible for the management of a group of approximately 24 air quality and environmental professionals, 15 geoscience, and 10 hazardous waste professionals providing full-service consulting, project management, regulatory compliance and A/E design assistance in all areas.

Parsons ES, **Manager for Air Source Testing Services**. Responsible for the management of 8 individuals in the area of air source testing and air regulatory permitting projects located in Bakersfield, California.

1992-1995 Engineering-Science, Inc. **Principal Engineer and Senior Project Manager** in the air quality department. Responsibilities included multimedia regulatory compliance and permitting (including hazardous and nuclear materials), air pollution engineering (emissions from stationary and mobile sources, control of criteria and air toxics, dispersion modeling, risk assessment, visibility analysis, odor analysis), supervisory functions and project management.

1990-1992 Engineering-Science, Inc. **Principal Engineer and Project Manager** in the air quality department. Responsibilities included permitting, tracking regulatory issues, technical analysis, and supervisory functions on numerous air, water, and hazardous waste projects. Responsibilities also include client and agency interfacing, project cost and schedule control, and reporting to internal and external upper management regarding project status.

1989-1990 Kinetics Technology International, Corp. **Development Engineer.** Involved in thermal engineering R&D and project work related to low-NOx ceramic radiant burners, fired heater NOx reduction, SCR design, and fired heater retrofitting.

1988-1989 Heat Transfer Research, Inc. **Research Engineer**. Involved in the design of fired heaters, heat exchangers, air coolers, and other non-fired equipment. Also did research in the area of heat exchanger tube vibrations.

EDUCATION

1984-1988 Ph.D., Mechanical Engineering, California Institute of Technology (Caltech), Pasadena, CA.

1984 M. S., Mechanical Engineering, California Institute of Technology (Caltech), Pasadena, CA.

1978-1983 B. Tech (Honors), Mechanical Engineering, Indian Institute of Technology (IIT) Kharagpur, India

TEACHING EXPERIENCE

Caltech

"Thermodynamics," Teaching Assistant, California Institute of Technology, 1983, 1987.

"Air Pollution Control," Teaching Assistant, California Institute of Technology, 1985.

"Caltech Secondary and High School Saturday Program," - taught various mathematics (algebra through calculus) and science (physics and chemistry) courses to high school students, 1983-1989.

"Heat Transfer," - taught this course in the Fall and Winter terms of 1994-1995 in the Division of Engineering and Applied Science.

"Thermodynamics and Heat Transfer," Fall and Winter Terms of 1996-1997.

U.C. Riverside, Extension

"Toxic and Hazardous Air Contaminants," University of California Extension Program, Riverside, California. Various years since 1992.

ED_006328A_00019660-00013

"Prevention and Management of Accidental Air Emissions," University of California Extension Program, Riverside, California. Various years since 1992.

"Air Pollution Control Systems and Strategies," University of California Extension Program, Riverside, California, Summer 1992-93, Summer 1993-1994.

"Air Pollution Calculations," University of California Extension Program, Riverside, California, Fall 1993-94, Winter 1993-94, Fall 1994-95.

"Process Safety Management," University of California Extension Program, Riverside, California. Various years since 1992-2010.

"Process Safety Management," University of California Extension Program, Riverside, California, at SCAQMD, Spring 1993-94.

"Advanced Hazard Analysis - A Special Course for LEPCs," University of California Extension Program, Riverside, California, taught at San Diego, California, Spring 1993-1994.

"Advanced Hazardous Waste Management" University of California Extension Program, Riverside, California. 2005.

Loyola Marymount University

"Fundamentals of Air Pollution - Regulations, Controls and Engineering," Loyola Marymount University, Dept. of Civil Engineering. Various years since 1993.

"Air Pollution Control," Loyola Marymount University, Dept. of Civil Engineering, Fall 1994.

"Environmental Risk Assessment," Loyola Marymount University, Dept. of Civil Engineering. Various years since 1998.

"Hazardous Waste Remediation" Loyola Marymount University, Dept. of Civil Engineering. Various years since 2006.

University of Southern California

"Air Pollution Controls," University of Southern California, Dept. of Civil Engineering, Fall 1993, Fall 1994.

"Air Pollution Fundamentals," University of Southern California, Dept. of Civil Engineering, Winter 1994.

University of California, Los Angeles

"Air Pollution Fundamentals," University of California, Los Angeles, Dept. of Civil and Environmental Engineering, Spring 1994, Spring 1999, Spring 2000, Spring 2003, Spring 2006, Spring 2007, Spring 2008, Spring 2009.

International Programs

"Environmental Planning and Management," 5 week program for visiting Chinese delegation, 1994.

"Environmental Planning and Management," 1 day program for visiting Russian delegation, 1995.

"Air Pollution Planning and Management," IEP, UCR, Spring 1996.

"Environmental Issues and Air Pollution," IEP, UCR, October 1996.

PROFESSIONAL AFFILIATIONS AND HONORS

President of India Gold Medal, IIT Kharagpur, India, 1983.

Member of the Alternatives Assessment Committee of the Grand Canyon Visibility Transport Commission, established by the Clean Air Act Amendments of 1990, 1992.

ED_006328A_00019660-00014

American Society of Mechanical Engineers: Los Angeles Section Executive Committee, Heat Transfer Division, and Fuels and Combustion Technology Division, 1987-mid-1990s.

Air and Waste Management Association, West Coast Section, 1989-mid-2000s.

PROFESSIONAL CERTIFICATIONS

EIT, California (#XE088305), 1993.

REA I, California (#07438), 2000.

Certified Permitting Professional, South Coast AQMD (#C8320), since 1993.

QEP, Institute of Professional Environmental Practice, since 2000.

CEM, State of Nevada (#EM-1699). Expiration 10/07/2021.

PUBLICATIONS (PARTIAL LIST)

"Physical Properties and Oxidation Rates of Chars from Bituminous Coals," with Y.A. Levendis, R.C. Flagan and G.R. Gavalas, *Fuel*, **67**, 275-283 (1988).

"Char Combustion: Measurement and Analysis of Particle Temperature Histories," with R.C. Flagan, G.R. Gavalas and P.S. Northrop, *Comb. Sci. Tech.* **60**, 215-230 (1988).

"On the Combustion of Bituminous Coal Chars," PhD Thesis, California Institute of Technology (1988).

"Optical Pyrometry: A Powerful Tool for Coal Combustion Diagnostics," *J. Coal Quality*, **8**, 17-22 (1989).

"Post-Ignition Transients in the Combustion of Single Char Particles," with Y.A. Levendis, R.C. Flagan and G.R. Gavalas, *Fuel*, **68**, 849-855 (1989).

"A Model for Single Particle Combustion of Bituminous Coal Char." Proc. ASME National Heat Transfer Conference, Philadelphia, **HTD-Vol. 106**, 505-513 (1989).

"Discrete Simulation of Cenospheric Coal-Char Combustion," with R.C. Flagan and G.R. Gavalas, *Combust. Flame*, **77**, 337-346 (1989).

"Particle Measurements in Coal Combustion," with R.C. Flagan, in "**Combustion Measurements**" (ed. N. Chigier), Hemisphere Publishing Corp. (1991).

"Cross Linking in Pore Structures and Its Effect on Reactivity," with G.R. Gavalas in preparation.

"Natural Frequencies and Mode Shapes of Straight Tubes," Proprietary Report for Heat Transfer Research Institute, Alhambra, CA (1990).

"Optimal Tube Layouts for Kamui SL-Series Exchangers," with K. Ishihara, Proprietary Report for Kamui Company Limited, Tokyo, Japan (1990).

"HTRI Process Heater Conceptual Design," Proprietary Report for Heat Transfer Research Institute, Alhambra, CA (1990).

"Asymptotic Theory of Transonic Wind Tunnel Wall Interference," with N.D. Malmuth and others, Arnold Engineering Development Center, Air Force Systems Command, USAF (1990).

"Gas Radiation in a Fired Heater Convection Section," Proprietary Report for Heat Transfer Research Institute, College Station, TX (1990).

"Heat Transfer and Pressure Drop in NTIW Heat Exchangers," Proprietary Report for Heat Transfer Research Institute, College Station, TX (1991).

"NOx Control and Thermal Design," Thermal Engineering Tech Briefs, (1994).

ED_006328A_00019660-00015

"From Purchase of Landmark Environmental Insurance to Remediation: Case Study in Henderson, Nevada," with Robin E. Bain and Jill Quillin, presented at the AQMA Annual Meeting, Florida, 2001.

"The Jones Act Contribution to Global Warming, Acid Rain and Toxic Air Contaminants," with Charles W. Botsford, presented at the AQMA Annual Meeting, Florida, 2001.

PRESENTATIONS (PARTIAL LIST)

"Pore Structure and Combustion Kinetics - Interpretation of Single Particle Temperature-Time Histories," with P.S. Northrop, R.C. Flagan and G.R. Gavalas, presented at the AIChE Annual Meeting, New York (1987).

"Measurement of Temperature-Time Histories of Burning Single Coal Char Particles," with R.C. Flagan, presented at the American Flame Research Committee Fall International Symposium, Pittsburgh, (1988).

"Physical Characterization of a Cenospheric Coal Char Burned at High Temperatures," with R.C. Flagan and G.R. Gavalas, presented at the Fall Meeting of the Western States Section of the Combustion Institute, Laguna Beach, California (1988).

"Control of Nitrogen Oxide Emissions in Gas Fired Heaters - The Retrofit Experience," with G. P. Croce and R. Patel, presented at the International Conference on Environmental Control of Combustion Processes (Jointly sponsored by the American Flame Research Committee and the Japan Flame Research Committee), Honolulu, Hawaii (1991).

"Air Toxics - Past, Present and the Future," presented at the Joint AIChE/AAEE Breakfast Meeting at the AIChE 1991 Annual Meeting, Los Angeles, California, November 17-22 (1991).

"Air Toxics Emissions and Risk Impacts from Automobiles Using Reformulated Gasolines," presented at the Third Annual Current Issues in Air Toxics Conference, Sacramento, California, November 9-10 (1992).

"Air Toxics from Mobile Sources," presented at the Environmental Health Sciences (ESE) Seminar Series, UCLA, Los Angeles, California, November 12, (1992).

"Kilns, Ovens, and Dryers - Present and Future," presented at the Gas Company Air Quality Permit Assistance Seminar, Industry Hills Sheraton, California, November 20, (1992).

"The Design and Implementation of Vehicle Scrapping Programs," presented at the 86th Annual Meeting of the Air and Waste Management Association, Denver, Colorado, June 12, 1993.

"Air Quality Planning and Control in Beijing, China," presented at the 87th Annual Meeting of the Air and Waste Management Association, Cincinnati, Ohio, June 19-24, 1994.

ED_006328A_00019660-00016

Annex A

Expert Litigation Support

A. Occasions where Dr. Sahu has provided Written or Oral testimony before Congress:

1. In July 2012, provided expert written and oral testimony to the House Subcommittee on Energy and the Environment, Committee on Science, Space, and Technology at a Hearing entitled "Hitting the Ethanol Blend Wall – Examining the Science on E15."

B. Matters for which Dr. Sahu has provided affidavits and expert reports include:

2. Affidavit for Rocky Mountain Steel Mills, Inc. located in Pueblo Colorado – dealing with the technical uncertainties associated with night-time opacity measurements in general and at this steel mini-mill.

3. Expert reports and depositions (2/28/2002 and 3/1/2002; 12/2/2003 and 12/3/2003; 5/24/2004) on behalf of the United States in connection with the Ohio Edison NSR Cases. *United States, et al. v. Ohio Edison Co., et al.*, C2-99-1181 (Southern District of Ohio).

4. Expert reports and depositions (5/23/2002 and 5/24/2002) on behalf of the United States in connection with the Illinois Power NSR Case. *United States v. Illinois Power Co., et al.*, 99-833-MJR (Southern District of Illinois).

5. Expert reports and depositions (11/25/2002 and 11/26/2002) on behalf of the United States in connection with the Duke Power NSR Case. *United States, et al. v. Duke Energy Corp.*, 1:00-CV-1262 (Middle District of North Carolina).

6. Expert reports and depositions (10/6/2004 and 10/7/2004; 7/10/2006) on behalf of the United States in connection with the American Electric Power NSR Cases. *United States, et al. v. American Electric Power Service Corp., et al.*, C2-99-1182, C2-99-1250 (Southern District of Ohio).

7. Affidavit (March 2005) on behalf of the Minnesota Center for Environmental Advocacy and others in the matter of the Application of Heron Lake BioEnergy LLC to construct and operate an ethanol production facility – submitted to the Minnesota Pollution Control Agency.

8. Expert Report and Deposition (10/31/2005 and 11/1/2005) on behalf of the United States in connection with the East Kentucky Power Cooperative NSR Case. *United States v. East Kentucky Power Cooperative, Inc.*, 5:04-cv-00034-KSF (Eastern District of Kentucky).

9. Affidavits and deposition on behalf of Basic Management Inc. (BMI) Companies in connection with the BMI vs. USA remediation cost recovery Case.

10. Expert Report on behalf of Penn Future and others in the Cambria Coke plant permit challenge in Pennsylvania.

11. Expert Report on behalf of the Appalachian Center for the Economy and the Environment and others in the Western Greenbrier permit challenge in West Virginia.

12. Expert Report, deposition (via telephone on January 26, 2007) on behalf of various Montana petitioners (Citizens Awareness Network (CAN), Women's Voices for the Earth (WVE) and the Clark Fork Coalition (CFC)) in the Thompson River Cogeneration LLC Permit No. 3175-04 challenge.

13. Expert Report and deposition (2/2/07) on behalf of the Texas Clean Air Cities Coalition at the Texas State Office of Administrative Hearings (SOAH) in the matter of the permit challenges to TXU Project Apollo's eight new proposed PRB-fired PC boilers located at seven TX sites.

14. Expert Testimony (July 2007) on behalf of the Izaak Walton League of America and others in connection with the acquisition of power by Xcel Energy from the proposed Gascoyne Power Plant – at the State of Minnesota, Office of Administrative Hearings for the Minnesota PUC (MPUC No. E002/CN-06-1518; OAH No. 12-2500-17857-2).

15. Affidavit (July 2007) Comments on the Big Cajun I Draft Permit on behalf of the Sierra Club – submitted to the Louisiana DEQ.

ED_006328A_00019660-00017

16. Expert Report and Deposition (12/13/2007) on behalf of Commonwealth of Pennsylvania – Dept. of Environmental Protection, State of Connecticut, State of New York, and State of New Jersey (Plaintiffs) in connection with the Allegheny Energy NSR Case. *Plaintiffs v. Allegheny Energy Inc., et al.,* 2:05cv0885 (Western District of Pennsylvania).

17. Expert Reports and Pre-filed Testimony before the Utah Air Quality Board on behalf of Sierra Club in the Sevier Power Plant permit challenge.

18. Expert Report and Deposition (October 2007) on behalf of MTD Products Inc., in connection with *General Power Products, LLC v MTD Products Inc.*, 1:06 CVA 0143 (Southern District of Ohio, Western Division) .

19. Expert Report and Deposition (June 2008) on behalf of Sierra Club and others in the matter of permit challenges (Title V: 28.0801-29 and PSD: 28.0803-PSD) for the Big Stone II unit, proposed to be located near Milbank, South Dakota.

20. Expert Reports, Affidavit, and Deposition (August 15, 2008) on behalf of Earthjustice in the matter of air permit challenge (CT-4631) for the Basin Electric Dry Fork station, under construction near Gillette, Wyoming before the Environmental Quality Council of the State of Wyoming.

21. Affidavits (May 2010/June 2010 in the Office of Administrative Hearings))/Declaration and Expert Report (November 2009 in the Office of Administrative Hearings) on behalf of NRDC and the Southern Environmental Law Center in the matter of the air permit challenge for Duke Cliffside Unit 6. Office of Administrative Hearing Matters 08 EHR 0771, 0835 and 0836 and 09 HER 3102, 3174, and 3176 (consolidated).

22. Declaration (August 2008), Expert Report (January 2009), and Declaration (May 2009) on behalf of Southern Alliance for Clean Energy in the matter of the air permit challenge for Duke Cliffside Unit 6. *Southern Alliance for Clean Energy et al., v. Duke Energy Carolinas, LLC*, Case No. 1:08-cv-00318-LHT-DLH (Western District of North Carolina, Asheville Division).

23. Declaration (August 2008) on behalf of the Sierra Club in the matter of Dominion Wise County plant MACT.us

24. Expert Report (June 2008) on behalf of Sierra Club for the Green Energy Resource Recovery Project, MACT Analysis.

25. Expert Report (February 2009) on behalf of Sierra Club and the Environmental Integrity Project in the matter of the air permit challenge for NRG Limestone's proposed Unit 3 in Texas.

26. Expert Report (June 2009) on behalf of MTD Products, Inc., in the matter of *Alice Holmes and Vernon Holmes v. Home Depot USA, Inc., et al.*

27. Expert Report (August 2009) on behalf of Sierra Club and the Southern Environmental Law Center in the matter of the air permit challenge for Santee Cooper's proposed Pee Dee plant in South Carolina).

28. Statements (May 2008 and September 2009) on behalf of the Minnesota Center for Environmental Advocacy to the Minnesota Pollution Control Agency in the matter of the Minnesota Haze State Implementation Plans.

29. Expert Report (August 2009) on behalf of Environmental Defense, in the matter of permit challenges to the proposed Las Brisas coal fired power plant project at the Texas State Office of Administrative Hearings (SOAH).

30. Expert Report and Rebuttal Report (September 2009) on behalf of the Sierra Club, in the matter of challenges to the proposed Medicine Bow Fuel and Power IGL plant in Cheyenne, Wyoming.

31. Expert Report (December 2009) and Rebuttal reports (May 2010 and June 2010) on behalf of the United States in connection with the Alabama Power Company NSR Case. *United States v. Alabama Power Company*, CV-01-HS-152-S (Northern District of Alabama, Southern Division).

32. Pre-filed Testimony (October 2009) on behalf of Environmental Defense and others, in the matter of challenges to the proposed White Stallion Energy Center coal fired power plant project at the Texas State Office of Administrative Hearings (SOAH).

ED_006328A_00019660-00018

33. Pre-filed Testimony (July 2010) and Written Rebuttal Testimony (August 2010) on behalf of the State of New Mexico Environment Department in the matter of Proposed Regulation 20.2.350 NMAC – *Greenhouse Gas Cap and Trade Provisions,* No. EIB 10-04 (R), to the State of New Mexico, Environmental Improvement Board.

34. Expert Report (August 2010) and Rebuttal Expert Report (October 2010) on behalf of the United States in connection with the Louisiana Generating NSR Case. *United States v. Louisiana Generating, LLC*, 09-CV100-RET-CN (Middle District of Louisiana) – Liability Phase.

35. Declaration (August 2010), Reply Declaration (November 2010), Expert Report (April 2011), Supplemental and Rebuttal Expert Report (July 2011) on behalf of the United States in the matter of DTE Energy Company and Detroit Edison Company (Monroe Unit 2). *United States of America v. DTE Energy Company and Detroit Edison Company*, Civil Action No. 2:10-cv-13101-BAF-RSW (Eastern District of Michigan).

36. Expert Report and Deposition (August 2010) as well as Affidavit (September 2010) on behalf of Kentucky Waterways Alliance, Sierra Club, and Valley Watch in the matter of challenges to the NPDES permit issued for the Trimble County power plant by the Kentucky Energy and Environment Cabinet to Louisville Gas and Electric, File No. DOW-41106-047.

37. Expert Report (August 2010), Rebuttal Expert Report (September 2010), Supplemental Expert Report (September 2011), and Declaration (November 2011) on behalf of Wild Earth Guardians in the matter of opacity exceedances and monitor downtime at the Public Service Company of Colorado (Xcel)'s Cherokee power plant. No. 09-cv-1862 (District of Colorado).

38. Written Direct Expert Testimony (August 2010) and Affidavit (February 2012) on behalf of Fall-Line Alliance for a Clean Environment and others in the matter of the PSD Air Permit for Plant Washington issued by Georgia DNR at the Office of State Administrative Hearing, State of Georgia (OSAH-BNR-AQ-1031707-98-WALKER).

39. Deposition (August 2010) on behalf of Environmental Defense, in the matter of the remanded permit challenge to the proposed Las Brisas coal fired power plant project at the Texas State Office of Administrative Hearings (SOAH).

40. Expert Report, Supplemental/Rebuttal Expert Report, and Declarations (October 2010, November 2010, September 2012) on behalf of New Mexico Environment Department (Plaintiff-Intervenor), Grand Canyon Trust and Sierra Club (Plaintiffs) in the matter of *Plaintiffs v. Public Service Company of New Mexico* (PNM), Civil No. 1:02-CV-0552 BB/ATC (ACE) (District of New Mexico).

41. Expert Report (October 2010) and Rebuttal Expert Report (November 2010) (BART Determinations for PSCo Hayden and CSU Martin Drake units) to the Colorado Air Quality Commission on behalf of Coalition of Environmental Organizations.

42. Expert Report (November 2010) (BART Determinations for TriState Craig Units, CSU Nixon Unit, and PRPA Rawhide Unit) to the Colorado Air Quality Commission on behalf of Coalition of Environmental Organizations.

43. Declaration (November 2010) on behalf of the Sierra Club in connection with the Martin Lake Station Units 1, 2, and 3. *Sierra Club v. Energy Future Holdings Corporation and Luminant Generation Company LLC*, Case No. 5:10-cv-00156-DF-CMC (Eastern District of Texas, Texarkana Division).

44. Pre-Filed Testimony (January 2011) and Declaration (February 2011) to the Georgia Office of State Administrative Hearings (OSAH) in the matter of Minor Source HAPs status for the proposed Longleaf Energy Associates power plant (OSAH-BNR-AQ-1115157-60-HOWELLS) on behalf of the Friends of the Chattahoochee and the Sierra Club).

45. Declaration (February 2011) in the matter of the Draft Title V Permit for RRI Energy MidAtlantic Power Holdings LLC Shawville Generating Station (Pennsylvania), ID No. 17-00001 on behalf of the Sierra Club.

46. Expert Report (March 2011), Rebuttal Expert Report (June 2011) on behalf of the United States in *United States of America v. Cemex, Inc.*, Civil Action No. 09-cv-00019-MSK-MEH (District of Colorado).

47. Declaration (April 2011) and Expert Report (July 16, 2012) in the matter of the Lower Colorado River Authority (LCRA)'s Fayette (Sam Seymour) Power Plant on behalf of the Texas Campaign for the Environment. *Texas*

Campaign for the Environment v. Lower Colorado River Authority, Civil Action No. 4:11-cv-00791 (Southern District of Texas, Houston Division).

48. Declaration (June 2011) on behalf of the Plaintiffs MYTAPN in the matter of Microsoft-Yes, Toxic Air Pollution-No (MYTAPN) v. State of Washington, Department of Ecology and Microsoft Corporation Columbia Data Center to the Pollution Control Hearings Board, State of Washington, Matter No. PCHB No. 10-162.

49. Expert Report (June 2011) on behalf of the New Hampshire Sierra Club at the State of New Hampshire Public Utilities Commission, Docket No. 10-261 – the 2010 Least Cost Integrated Resource Plan (LCIRP) submitted by the Public Service Company of New Hampshire (re. Merrimack Station Units 1 and 2).

50. Declaration (August 2011) in the matter of the Sandy Creek Energy Associates L.P. Sandy Creek Power Plant on behalf of Sierra Club and Public Citizen. *Sierra Club, Inc. and Public Citizen, Inc. v. Sandy Creek Energy Associates, L.P.,* Civil Action No. A-08-CA-648-LY (Western District of Texas, Austin Division).

51. Expert Report (October 2011) on behalf of the Defendants in the matter of *John Quiles and Jeanette Quiles et al. v. Bradford-White Corporation, MTD Products, Inc., Kohler Co., et al.,* Case No. 3:10-cv-747 (TJM/DEP) (Northern District of New York).

52. Declaration (October 2011) on behalf of the Plaintiffs in the matter of *American Nurses Association et. al. (Plaintiffs), v. US EPA (Defendant)*, Case No. 1:08-cv-02198-RMC (US District Court for the District of Columbia).

53. Declaration (February 2012) and Second Declaration (February 2012) in the matter of *Washington Environmental Council and Sierra Club Washington State Chapter v. Washington State Department of Ecology and Western States Petroleum Association,* Case No. 11-417-MJP (Western District of Washington).

54. Expert Report (March 2012) and Supplemental Expert Report (November 2013) in the matter of *Environment Texas Citizen Lobby, Inc and Sierra Club v. ExxonMobil Corporation et al.,* Civil Action No. 4:10-cv-4969 (Southern District of Texas, Houston Division).

55. Declaration (March 2012) in the matter of *Center for Biological Diversity, et al. v. United States Environmental Protection Agency,* Case No. 11-1101 (consolidated with 11-1285, 11-1328 and 11-1336) (US Court of Appeals for the District of Columbia Circuit).

56. Declaration (March 2012) in the matter of *Sierra Club v. The Kansas Department of Health and Environment*, Case No. 11-105,493-AS (Holcomb power plant) (Supreme Court of the State of Kansas).

57. Declaration (March 2012) in the matter of the Las Brisas Energy Center *Environmental Defense Fund et al., v. Texas Commission on Environmental Quality,* Cause No. D-1-GN-11-001364 (District Court of Travis County, Texas, 261st Judicial District).

58. Expert Report (April 2012), Supplemental and Rebuttal Expert Report (July 2012), and Supplemental Rebuttal Expert Report (August 2012) on behalf of the states of New Jersey and Connecticut in the matter of the Portland Power plant *State of New Jersey and State of Connecticut (Intervenor-Plaintiff) v. RRI Energy Mid-Atlantic Power Holdings et al.,* Civil Action No. 07-CV-5298 (JKG) (Eastern District of Pennsylvania).

59. Declaration (April 2012) in the matter of the EPA's EGU MATS Rule, on behalf of the Environmental Integrity Project.

60. Expert Report (August 2012) on behalf of the United States in connection with the Louisiana Generating NSR Case. *United States v. Louisiana Generating, LLC*, 09-CV100-RET-CN (Middle District of Louisiana) – Harm Phase.

61. Declaration (September 2012) in the Matter of the Application of *Energy Answers Incinerator, Inc.* for a Certificate of Public Convenience and Necessity to Construct a 120 MW Generating Facility in Baltimore City, Maryland, before the Public Service Commission of Maryland, Case No. 9199.

62. Expert Report (October 2012) on behalf of the Appellants (Robert Concilus and Leah Humes) in the matter of Robert Concilus and Leah Humes v. Commonwealth of Pennsylvania Department of Environmental Protection and Crawford Renewable Energy, before the Commonwealth of Pennsylvania Environmental Hearing Board, Docket No. 2011-167-R.

ED_006328A_00019660-00020

63. Expert Report (October 2012), Supplemental Expert Report (January 2013), and Affidavit (June 2013) in the matter of various Environmental Petitioners v. North Carolina DENR/DAQ and Carolinas Cement Company, before the Office of Administrative Hearings, State of North Carolina.

64. Pre-filed Testimony (October 2012) on behalf of No-Sag in the matter of the North Springfield Sustainable Energy Project before the State of Vermont, Public Service Board.

65. Pre-filed Testimony (November 2012) on behalf of Clean Wisconsin in the matter of Application of Wisconsin Public Service Corporation for Authority to Construct and Place in Operation a New Multi-Pollutant Control Technology System (ReACT) for Unit 3 of the Weston Generating Station, before the Public Service Commission of Wisconsin, Docket No. 6690-CE-197.

66. Expert Report (February 2013) on behalf of Petitioners in the matter of Credence Crematory, Cause No. 12-A-J-4538 before the Indiana Office of Environmental Adjudication.

67. Expert Report (April 2013), Rebuttal report (July 2013), and Declarations (October 2013, November 2013) on behalf of the Sierra Club in connection with the Luminant Big Brown Case. *Sierra Club v. Energy Future Holdings Corporation and Luminant Generation Company LLC*, Civil Action No. 6:12-cv-00108-WSS (Western District of Texas, Waco Division).

68. Declaration (April 2013) on behalf of Petitioners in the matter of *Sierra Club, et al., (Petitioners) v Environmental Protection Agency et al. (Resppondents),* Case No., 13-1112, (Court of Appeals, District of Columbia Circuit).

69. Expert Report (May 2013) and Rebuttal Expert Report (July 2013) on behalf of the Sierra Club in connection with the Luminant Martin Lake Case. *Sierra Club v. Energy Future Holdings Corporation and Luminant Generation Company LLC*, Civil Action No. 5:10-cv-0156-MHS-CMC (Eastern District of Texas, Texarkana Division).

70. Declaration (August 2013) on behalf of A. J. Acosta Company, Inc., in the matter of *A. J. Acosta Company, Inc., v. County of San Bernardino*, Case No. CIVSS803651.

71. Comments (October 2013) on behalf of the Washington Environmental Council and the Sierra Club in the matter of the Washington State Oil Refinery RACT (for Greenhouse Gases), submitted to the Washington State Department of Ecology, the Northwest Clean Air Agency, and the Puget Sound Clean Air Agency.

72. Statement (November 2013) on behalf of various Environmental Organizations in the matter of the Boswell Energy Center (BEC) Unit 4 Environmental Retrofit Project, to the Minnesota Public Utilities Commission, Docket No. E-015/M-12-920.

73. Expert Report (December 2013) on behalf of the United States in *United States of America v. Ameren Missouri*, Civil Action No. 4:11-cv-00077-RWS (Eastern District of Missouri, Eastern Division).

74. Expert Testimony (December 2013) on behalf of the Sierra Club in the matter of Public Service Company of New Hampshire Merrimack Station Scrubber Project and Cost Recovery, Docket No. DE 11-250, to the State of New Hampshire Public Utilities Commission.

75. Expert Report (January 2014) on behalf of Baja, Inc., in *Baja, Inc., v. Automotive Testing and Development Services, Inc. et. al*, Civil Action No. 8:13-CV-02057-GRA (District of South Carolina, Anderson/Greenwood Division).

76. Declaration (March 2014) on behalf of the Center for International Environmental Law, Chesapeake Climate Action Network, Friends of the Earth, Pacific Environment, and the Sierra Club (Plaintiffs) in the matter of *Plaintiffs v. the Export-Import Bank (Ex-Im Bank) of the United States*, Civil Action No. 13-1820 RC (District Court for the District of Columbia).

77. Declaration (April 2014) on behalf of Respondent-Intervenors in the matter of *Mexichem Specialty Resins Inc., et al., (Petitioners) v Environmental Protection Agency et al.,* Case No., 12-1260 (and Consolidated Case Nos. 12-1263, 12-1265, 12-1266, and 12-1267), (Court of Appeals, District of Columbia Circuit).

78. Direct Prefiled Testimony (June 2014) on behalf of the Michigan Environmental Council and the Sierra Club in the matter of the Application of DTE Electric Company for Authority to Implement a Power Supply Cost

ED_006328A_00019660-00021

Recovery (PSCR) Plan in its Rate Schedules for 2014 Metered Jurisdictional Sales of Electricity, Case No. U-17319 (Michigan Public Service Commission).

79. Expert Report (June 2014) on behalf of ECM Biofilms in the matter of the US Federal Trade Commission (FTC) v. ECM Biofilms (FTC Docket #9358).

80. Direct Prefiled Testimony (August 2014) on behalf of the Michigan Environmental Council and the Sierra Club in the matter of the Application of Consumers Energy Company for Authority to Implement a Power Supply Cost Recovery (PSCR) Plan in its Rate Schedules for 2014 Metered Jurisdictional Sales of Electricity, Case No. U-17317 (Michigan Public Service Commission).

81. Declaration (July 2014) on behalf of Public Health Intervenors in the matter of *EME Homer City Generation v. US EPA* (Case No. 11-1302 and consolidated cases) relating to the lifting of the stay entered by the Court on December 30, 2011 (US Court of Appeals for the District of Columbia).

82. Expert Report (September 2014), Rebuttal Expert Report (December 2014) and Supplemental Expert Report (March 2015) on behalf of Plaintiffs in the matter of *Sierra Club and Montana Environmental Information Center (Plaintiffs) v. PPL Montana LLC, Avista Corporation, Puget Sound Energy, Portland General Electric Company, Northwestern Corporation, and Pacificorp (Defendants)*, Civil Action No. CV 13-32-BLG-DLC-JCL (US District Court for the District of Montana, Billings Division).

83. Expert Report (November 2014) on behalf of Niagara County, the Town of Lewiston, and the Villages of Lewiston and Youngstown in the matter of CWM Chemical Services, LLC New York State Department of Environmental Conservation (NYSDEC) Permit Application Nos.: 9-2934-00022/00225, 9-2934-00022/00231, 9-2934-00022/00232, and 9-2934-00022/00249 (pending).

84. *Declaration (January 2015) relating to Startup/Shutdown in the MATS Rule (EPA Docket ID No. EPA-HQ-OAR-2009-0234) on behalf of the Environmental Integrity Project.*

85. Pre-filed Direct Testimony (March 2015), Supplemental Testimony (May 2015), and Surrebuttal Testimony (December 2015) on behalf of Friends of the Columbia Gorge in the matter of the Application for a Site Certificate for the Troutdale Energy Center before the Oregon Energy Facility Siting Council.

86. Brief of Amici Curiae Experts in Air Pollution Control and Air Quality Regulation in Support of the Respondents, On Writs of Certiorari to the US Court of Appeals for the District of Columbia, No. 14-46, 47, 48. *Michigan et. al., (Petitioners) v. EPA et. al., Utility Air Regulatory Group (Petitioners) v. EPA et. al., National Mining Association et. al., (Petitioner) v. EPA et. al.,* (Supreme Court of the United States).

87. Expert Report (March 2015) and Rebuttal Expert Report (January 2016) on behalf of Plaintiffs in the matter of *Conservation Law Foundation v. Broadrock Gas Services LLC, Rhode Island LFG GENCO LLC, and Rhode Island Resource Recovery Corporation (Defendants)*, Civil Action No. 1:13-cv-00777-M-PAS (US District Court for the District of Rhode Island).

88. Declaration (April 2015) relating to various Technical Corrections for the MATS Rule (EPA Docket ID No. EPA-HQ-OAR-2009-0234) on behalf of the Environmental Integrity Project.

89. Direct Prefiled Testimony (May 2015) on behalf of the Michigan Environmental Council, the Natural Resources Defense Council, and the Sierra Club in the matter of the Application of DTE Electric Company for Authority to Increase its Rates, Amend its Rate Schedules and Rules Governing the Distribution and Supply of Electric Energy and for Miscellaneous Accounting Authority, Case No. U-17767 (Michigan Public Service Commission).

90. Expert Report (July 2015) and Rebuttal Expert Report (July 2015) on behalf of Plaintiffs in the matter of *Northwest Environmental Defense Center et. al., v. Cascade Kelly Holdings LLC, d/b/a Columbia Pacific Bio-Refinery, and Global Partners LP (Defendants)*, Civil Action No. 3:14-cv-01059-SI (US District Court for the District of Oregon, Portland Division).

91. Declaration (August 2015, Docket No. 1570376) in support of "Opposition of Respondent-Intervenors American Lung Association, et. al., to Tri-State Generation's Emergency Motion;" Declaration (September 2015, Docket No. 1574820) in support of "Joint Motion of the State, Local Government, and Public Health Respondent-Intervenors for Remand Without Vacatur;" Declaration (October 2015) in support of "Joint Motion of the State, Local Government, and Public Health Respondent-Intervenors to State and Certain Industry

Petitioners' Motion to Govern, *White Stallion Energy Center, LLC v. US EPA*, Case No. 12-1100 (US Court of Appeals for the District of Columbia).

92. Declaration (September 2015) in support of the Draft Title V Permit for Dickerson Generating Station (Proposed Permit No 24-031-0019) on behalf of the Environmental Integrity Project.

93. Expert Report (Liability Phase) (December 2015) and Rebuttal Expert Report (February 2016) on behalf of Plaintiffs in the matter of *Natural Resources Defense Council, Inc., Sierra Club, Inc., Environmental Law and Policy Center, and Respiratory Health Association v. Illinois Power Resources LLC, and Illinois Power Resources Generating LLC (Defendants)*, Civil Action No. 1:13-cv-01181 (US District Court for the Central District of Illinois, Peoria Division).

94. Declaration (December 2015) in support of the Petition to Object to the Title V Permit for Morgantown Generating Station (Proposed Permit No 24-017-0014) on behalf of the Environmental Integrity Project.

95. Expert Report (November 2015) on behalf of Appellants in the matter of *Sierra Club, et al. v. Craig W. Butler, Director of Ohio Environmental Protection Agency et al.*, ERAC Case No. 14-256814.

96. Affidavit (January 2016) on behalf of Bridgewatch Detroit in the matter of *Bridgewatch Detroit v. Waterfront Petroleum Terminal Co., and Waterfront Terminal Holdings, LLC.*, in the Circuit Court for the County of Wayne, State of Michigan.

97. Expert Report (February 2016) and Rebuttal Expert Report (July 2016) on behalf of the challengers in the matter of the Delaware Riverkeeper Network, Clean Air Council, et. al., vs. Commonwealth of Pennsylvania Department of Environmental Protection and R. E. Gas Development LLC regarding the Geyer well site before the Pennsylvania Environmental Hearing Board.

98. Direct Testimony (May 2016) in the matter of Tesoro Savage LLC Vancouver Energy Distribution Terminal, Case No. 15-001 before the State of Washington Energy Facility Site Evaluation Council.

99. Declaration (June 2016) relating to deficiencies in air quality analysis for the proposed Millenium Bulk Terminal, Port of Longview, Washington.

100. Declaration (December 2016) relating to EPA's refusal to set limits on PM emissions from coal-fired power plants that reflect pollution reductions achievable with fabric filters on behalf of Environmental Integrity Project, Clean Air Council, Chesapeake Climate Action Network, Downwinders at Risk represented by Earthjustice in the matter of *ARIPPA v EPA, Case No. 15-1180.* (D.C. Circuit Court of Appeals).

101. Expert Report (January 2017) on the Environmental Impacts Analysis associated with the Huntley and Huntley Poseidon Well Pad on behalf citizens in the matter of the special exception use Zoning Hearing Board of Penn Township, Westmoreland County, Pennsylvania.

102. Expert Report (January 2017) on the Environmental Impacts Analysis associated with the Apex Energy Backus Well Pad on behalf citizens in the matter of the special exception use Zoning Hearing Board of Penn Township, Westmoreland County, Pennsylvania.

103. Expert Report (January 2017) on the Environmental Impacts Analysis associated with the Apex Energy Drakulic Well Pad on behalf citizens in the matter of the special exception use Zoning Hearing Board of Penn Township, Westmoreland County, Pennsylvania.

104. Expert Report (January 2017) on the Environmental Impacts Analysis associated with the Apex Energy Deutsch Well Pad on behalf citizens in the matter of the special exception use Zoning Hearing Board of Penn Township, Westmoreland County, Pennsylvania.

105. Affidavit (February 2017) pertaining to deficiencies water discharge compliance issues at the Wood River Refinery in the matter of *People of the State of Illinois (Plaintiff) v. Phillips 66 Company, ConocoPhillips Company, WRB Refining LP (Defendants)*, Case No. 16-CH-656, (Circuit Court for the Third Judicial Circuit, Madison County, Illinois).

106. Expert Report (March 2017) on behalf of the Plaintiff pertaining to non-degradation analysis for waste water discharges from a power plant in the matter of *Sierra Club (Plaintiff) v. Pennsylvania Department of Environmental Protection (PADEP) and Lackawanna Energy Center*, Docket No. 2016-047-L (consolidated), (Pennsylvania Environmental Hearing Board).

107. Expert Report (March 2017) on behalf of the Plaintiff pertaining to air emissions from the Heritage incinerator in East Liverpool, Ohio in the matter of *Save our County (Plaintiff) v. Heritage Thermal Services, Inc. (Defendant), Case No. 4:16-CV-1544-BYP*, (US District Court for the Northern District of Ohio, Eastern Division).

108. Rebuttal Expert Report (June 2017) on behalf of Plaintiffs in the matter of *Casey Voight and Julie Voight (Plaintiffs) v Coyote Creek Mining Company LLC (Defendant),* Civil Action No. 1:15-CV-00109 (US District Court for the District of North Dakota, Western Division).

109. Expert Affidavit (August 2017) and Penalty/Remedy Expert Affidavit (October 2017) on behalf of Plaintiff in the matter of *Wildearth Guardians (Plaintiff) v Colorado Springs Utility Board (Defendant,)* Civil Action No. 1:15-cv-00357-CMA-CBS (US District Court for the District of Colorado).

110. Expert Report (August 2017) on behalf of Appellant in the matter of *Patricia Ann Troiano (Appellant) v. Upper Burrell Township Zoning Hearing Board (Appellee)*, Court of Common Pleas of Westmoreland County, Pennsylvania, Civil Division.

111. Expert Report (October 2017), Supplemental Expert Report (October 2017), and Rebuttal Expert Report (November 2017) on behalf of Defendant in the matter of *Oakland Bulk and Oversized Terminal (Plaintiff) v City of Oakland (Defendant,)* Civil Action No. 3:16-cv-07014-VC (US District Court for the Northern District of California, San Francisco Division).

112. Declaration (December 2017) on behalf of the Environmental Integrity Project in the matter of permit issuance for ATI Flat Rolled Products Holdings, Breckenridge, PA to the Allegheny County Health Department.

113. Expert Report (Harm Phase) (January 2018), Rebuttal Expert Report (Harm Phase) (May 2018) and Supplemental Expert Report (Harm Phase) (April 2019) on behalf of Plaintiffs in the matter of *Natural Resources Defense Council, Inc., Sierra Club, Inc., and Respiratory Health Association v. Illinois Power Resources LLC, and Illinois Power Resources Generating LLC (Defendants)*, Civil Action No. 1:13-cv-01181 (US District Court for the Central District of Illinois, Peoria Division).

114. Declaration (February 2018) on behalf of the Chesapeake Bay Foundation, et. al., in the matter of the Section 126 Petition filed by the state of Maryland in *State of Maryland v. Pruitt (Defendant)*, Civil Action No. JKB-17-2939 (Consolidated with No. JKB-17-2873) (US District Court for the District of Maryland).

115. Direct Pre-filed Testimony (March 2018) on behalf of the National Parks Conservation Association (NPCA) in the matter of *NPCA v State of Washington, Department of Ecology and BP West Coast Products, LLC*, PCHB No. 17-055 (Pollution Control Hearings Board for the State of Washington.

116. Expert Affidavit (April 2018) and Second Expert Affidavit (May 2018) on behalf of Petitioners in the matter of *Coosa River Basin Initiative and Sierra Club (Petitioners) v State of Georgia Environmental Protection Division, Georgia Department of Natural Resources (Respondent) and Georgia Power Company (Intervenor/Respondent)*, Docket Nos: 1825406-BNR-WW-57-Howells and 1826761-BNR-WW-57-Howells, Office of State Administrative Hearings, State of Georgia.

117. Direct Pre-filed Testimony and Affidavit (December 2018) on behalf of Sierra Club and Texas Campaign for the Environment (Appellants) in the contested case hearing before the Texas State Office of Administrative Hearings in Docket Nos. 582-18-4846, 582-18-4847 (Application of GCGV Asset Holding, LLC for Air Quality Permit Nos. 146425/PSDTX1518 and 146459/PSDTX1520 in San Patricio County, Texas).

118. Expert Report (February 2019) on behalf of Sierra Club in the State of Florida, Division of Administrative Hearings, Case No. 18-2124EPP, Tampa Electric Company Big Bend Unit 1 Modernization Project Power Plant Siting Application No. PA79-12-A2.

119. Declaration (March 2019) on behalf of Earthjustice in the matter of comments on the renewal of the Title V Federal Operating Permit for Valero Houston refinery.

120. Expert Report (March 2019) on behalf of Plaintiffs for Class Certification in the matter of *Resendez et al v Precision Castparts Corporation* in the Circuit Court for the State of Oregon, County of Multnomah, Case No. 16cv16164.

121. Expert Report (June 2019), Affidavit (July 2019) and Rebuttal Expert Report (September 2019) on behalf of Appellants relating to the NPDES permit for the Cheswick power plant in the matter of *Three Rivers Waterkeeper and Sierra Club (Appellees) v. State of Pennsylvania Department of Environmental Protection (Appellee) and NRG Power Midwest (Permittee)*, before the Commonwealth of Pennsylvania Environmental Hearing Board, EHB Docket No. 2018-088-R.

122. Affidavit/Expert Report (August 2019) relating to the appeal of air permits issued to PTTGCA on behalf of Appellants in the matter of *Sierra Club (Appellants) v. Craig Butler, Director, et. al., Ohio EPA (Appellees)* before the State of Ohio Environmental Review Appeals Commission (ERAC), Case Nos. ERAC-19-6988 through -6991.

123. Expert Report (October 2019) relating to the appeal of air permit (Plan Approval) on behalf of Appellants in the matter of *Clean Air Council and Environmental Integrity Project (Appellants) v. Commonwealth of Pennsylvania Department of Environmental Protection and Sunoco Partners Marketing and Terminals L.P.*, before the Commonwealth of Pennsylvania Environmental Hearing Board, EHB Docket No. 2018-057-L.

124. Expert Report (December 2019), Affidavit (March 2020), and Supplemental Expert Report (July 2020) on behalf of Earthjustice in the matter of *Objection to the Issuance of PSD/NSR and Title V permits for Riverview Energy Corporation*, Dale, Indiana, before the Indiana Office of Environmental Adjudication, Cause No. 19-A-J-5073.

125. Affidavit (December 2019) on behalf of Plaintiff-Intervenor (Surfrider Foundation) in the matter of *United States and the State of Indiana (Plaintiffs), Surfrider Foundation (Plaintiff-Intervenor), and City of Chicago (Plaintiff-Intervenor) v. United States Steel Corporation (Defendant),* Civil Action No. 2:18-cv-00127 (US District Court for the Northern District of Indiana, Hammond Division).

126. Declarations (January 2020, February 2020, May 2020, July 2020, and August 2020) in support of Petitioner's Motion for Stay of PSCAA NOC Order of Approval No. 11386 in the matter of the *Puyallup Tribe of Indians v. Puget Sound Clean Air Agency (PSCAA) and Puget Sound Energy (PSE),* before the State of Washington Pollution Control Hearings Board, PCHB No. P19-088.

127. Expert Report (April 2020) on behalf of the plaintiff in the matter of Orion Engineered Carbons, GmbH (Plaintiff) vs. Evonik Operations, GmbH (formerly Evonik Degussa GmbH) (Respondent), before the German Arbitration Institute, Case No. DIS-SV-2019-00216.

128. Expert Independent Evaluation Report (June 2020) for *PacifiCorp's Decommissioning Costs Study Reports dated January 15, 2020 and March 13, 2020 relating to the closures of the Hunter, Huntington, Dave Johnston, Jim Bridger, Naughton, Wyodak, Hayden, and Colstrip (Units 3&4) plants*, prepared for the Oregon Public Utility Commission (Oregon PUC).

129. Direct Pre-filed Testimony (July 2020) on behalf of the Sierra Club in the matter of *the Application of the Ohio State University for a certificate of Environmental Compatibility and Public Need to Construct a Combined Heat and Power Facility in Franklin County, Ohio*, before the Ohio Power Siting Board, Case No. 19-1641-EL-BGN.

130. Expert Report (August 2020) and Rebuttal Expert Report (September 2020) on behalf of WildEarth Guardians (petitioners) in the matter of *the Appeals of the Air Quality Permit No. 7482-M1 Issued to 3 Bear Delaware Operating – NM LLC (EIB No. 20-21(A) and Registrations Nos. 8729, 8730, and 8733 under General Construction Permit for Oil and Gas Facilities (EIB No. 20-33 (A)*, before the State of New Mexico, Environmental Improvement Board.

131. Expert Report (July 2020) on the *Initial Economic Impact Analysis (EIA) for A Proposal To* Regulate *NOx Emissions from Natural Gas Fired Rich-Burn Natural Gas Reciprocating Internal Combustion Engines (RICE) Greater Than 100 Horsepower* prepared on behalf of Earthjustice and the National Parks Conservation Association in the matter of Regulation Number 7, Alternate Rules before the Colorado Air Quality Control Commission.

132. Expert Report (August 2020) and Supplemental Expert Report (February 2021) on the Potential Remedies to Avoid Adverse Thermal Impacts from the Merrimack Station on behalf of Plaintiffs in the matter of *Sierra Club Inc. and the* Conservation *Law Foundation (Plaintiffs) v. Granite Shore Power, LLC et. al., (Defendants)*, Civil Action No. 19-cv-216-JL (US District Court for the District of New Hampshire.)

133. Expert Report (August 2020) and Supplemental Expert Report (December 2020) on behalf of Plaintiffs in the matter of *PennEnvironment Inc., and Clean Air Council (Plaintiffs) and Allegheny County Health Department (Plaintiff-Intervenor) v. United States Steel Corporation (Defendant)*, Civil Action No. 2-19-cv-00484-MJH (US District Court for the Western District of Pennsylvania.)

134. Pre-filed Direct Testimony (October 2020) and Sur-rebuttal Testimony (November 2020) on behalf of petitioners (Ten Persons Group, including citizens, the Town of Braintree, the Town of Hingham, and the City of Quincy) in the matter of Algonquin Gas Transmission LLC, Weymouth MA, No. X266786 Air Quality Plan Approval, before the Commonwealth of Massachusetts, Department of Environmental Protection, the Office of Appeals and Dispute Resolution, OADR Docket Nos. 2019-008, 2019-009, 2019010, 2019-011, 2019-012 and 2019-013.

135. Expert Report (November 2020) on behalf of Protect PT in the matter of *Protect PT v. Commonwealth of Pennsylvania Department of Environmental Protection and Apex Energy (PA) LLC*, before the Commonwealth of Pennsylvania Environmental Hearing Board, Docket No. 2018-080-R (consolidated with 2019-101-R)(the "Drakulic Appeal").

136. Expert Report (December 2020) on behalf of Plaintiffs in the matter of *Sierra Club Inc. (Plaintiff) v. GenOn Power Midwest LP (Defendants)*, Civil Action No. 2-19-cv-01284-WSS (US District Court for the Western District of Pennsylvania.)

137. Pre-filed Testimony (January 2021) on behalf of the Plaintiffs (Shrimpers and Fishermen of the Rio Grande Valley represented by Texas RioGrande Legal Aid, Inc.) in the matter of the Appeal of Texas Commission on Environmental Quality (TCEQ) Permit Nos. 147681, PSDTX1522, GHGPSDTX172 for the Jupiter Brownsville Heavy Condensate Upgrader Facility, Cameron County, before the Texas State Office of Administrative Hearings, SOAH Docket No. 582-21-0111, TCEQ Docket No. 2020-1080-AIR.

C. Occasions where Dr. Sahu has provided oral testimony <u>in depositions, at trial or in similar proceedings</u> include the following:

138. Deposition on behalf of Rocky Mountain Steel Mills, Inc. located in Pueblo, Colorado – dealing with the manufacture of steel in mini-mills including methods of air pollution control and BACT in steel mini-mills and opacity issues at this steel mini-mill.

139. Trial Testimony (February 2002) on behalf of Rocky Mountain Steel Mills, Inc. in Denver District Court.

140. Trial Testimony (February 2003) on behalf of the United States in the Ohio Edison NSR Cases, *United States, et al. v. Ohio Edison Co., et al.*, C2-99-1181 (Southern District of Ohio).

141. Trial Testimony (June 2003) on behalf of the United States in the Illinois Power NSR Case, *United States v. Illinois Power Co., et al.*, 99-833-MJR (Southern District of Illinois).

142. Deposition (10/20/2005) on behalf of the United States in connection with the Cinergy NSR Case. *United States, et* al. *v. Cinergy Corp., et al.*, IP 99-1693-C-M/S (Southern District of Indiana).

143. Oral Testimony (August 2006) on behalf of the Appalachian Center for the Economy and the Environment re. the Western Greenbrier plant, WV before the West Virginia DEP.

144. Oral Testimony (May 2007) on behalf of various Montana petitioners (Citizens Awareness Network (CAN), Women's Voices for the Earth (WVE) and the Clark Fork Coalition (CFC)) re. the Thompson River Cogeneration plant before the Montana Board of Environmental Review.

145. Oral Testimony (October 2007) on behalf of the Sierra Club re. the Sevier Power Plant before the Utah Air Quality Board.

146. Oral Testimony (August 2008) on behalf of the Sierra Club and Clean Water re. Big Stone Unit II before the South Dakota Board of Minerals and the Environment.

147. Oral Testimony (February 2009) on behalf of the Sierra Club and the Southern Environmental Law Center re. Santee Cooper Pee Dee units before the South Carolina Board of Health and Environmental Control.

148. Oral Testimony (February 2009) on behalf of the Sierra Club and the Environmental Integrity Project re. NRG Limestone Unit 3 before the Texas State Office of Administrative Hearings (SOAH) Administrative Law Judges.

149. Deposition (July 2009) on behalf of MTD Products, Inc., in the matter of *Alice Holmes and Vernon Holmes v. Home Depot USA, Inc., et al.*

150. Deposition (October 2009) on behalf of Environmental Defense and others, in the matter of challenges to the proposed Coleto Creek coal fired power plant project at the Texas State Office of Administrative Hearings (SOAH).

151. Deposition (October 2009) on behalf of Environmental Defense, in the matter of permit challenges to the proposed Las Brisas coal fired power plant project at the Texas State Office of Administrative Hearings (SOAH).

152. Deposition (October 2009) on behalf of the Sierra Club, in the matter of challenges to the proposed Medicine Bow Fuel and Power IGL plant in Cheyenne, Wyoming.

153. Deposition (October 2009) on behalf of Environmental Defense and others, in the matter of challenges to the proposed Tenaska coal fired power plant project at the Texas State Office of Administrative Hearings (SOAH). (April 2010).

154. Oral Testimony (November 2009) on behalf of the Environmental Defense Fund re. the Las Brisas Energy Center before the Texas State Office of Administrative Hearings (SOAH) Administrative Law Judges.

155. Deposition (December 2009) on behalf of Environmental Defense and others, in the matter of challenges to the proposed White Stallion Energy Center coal fired power plant project at the Texas State Office of Administrative Hearings (SOAH).

156. Oral Testimony (February 2010) on behalf of the Environmental Defense Fund re. the White Stallion Energy Center before the Texas State Office of Administrative Hearings (SOAH) Administrative Law Judges.

157. Deposition (June 2010) on behalf of the United States in connection with the Alabama Power Company NSR Case. *United States v. Alabama Power Company*, CV-01-HS-152-S (Northern District of Alabama, Southern Division).

158. Trial Testimony (September 2010) on behalf of Commonwealth of Pennsylvania – Dept. of Environmental Protection, State of Connecticut, State of New York, State of Maryland, and State of New Jersey (Plaintiffs) in connection with the Allegheny Energy NSR Case in US District Court in the Western District of Pennsylvania. *Plaintiffs v. Allegheny Energy Inc., et al.,* 2:05cv0885 (Western District of Pennsylvania).

159. Oral Direct and Rebuttal Testimony (September 2010) on behalf of Fall-Line Alliance for a Clean Environment and others in the matter of the PSD Air Permit for Plant Washington issued by Georgia DNR at the Office of State Administrative Hearing, State of Georgia (OSAH-BNR-AQ-1031707-98-WALKER).

160. Oral Testimony (September 2010) on behalf of the State of New Mexico Environment Department in the matter of Proposed Regulation 20.2.350 NMAC – *Greenhouse Gas Cap and Trade Provisions,* No. EIB 10-04 (R), to the State of New Mexico, Environmental Improvement Board.

161. Oral Testimony (October 2010) on behalf of the Environmental Defense Fund re. the Las Brisas Energy Center before the Texas State Office of Administrative Hearings (SOAH) Administrative Law Judges.

162. Oral Testimony (November 2010) regarding BART for PSCo Hayden, CSU Martin Drake units before the Colorado Air Quality Commission on behalf of the Coalition of Environmental Organizations.

163. Oral Testimony (December 2010) regarding BART for TriState Craig Units, CSU Nixon Unit, and PRPA Rawhide Unit) before the Colorado Air Quality Commission on behalf of the Coalition of Environmental Organizations.

164. Deposition (December 2010) on behalf of the United States in connection with the Louisiana Generating NSR Case. *United States v. Louisiana Generating, LLC*, 09-CV100-RET-CN (Middle District of Louisiana).

ED_006328A_00019660-00027

165. Deposition (February 2011 and January 2012) on behalf of Wild Earth Guardians in the matter of opacity exceedances and monitor downtime at the Public Service Company of Colorado (Xcel)'s Cherokee power plant. No. 09-cv-1862 (D. Colo.).

166. Oral Testimony (February 2011) to the Georgia Office of State Administrative Hearings (OSAH) in the matter of Minor Source HAPs status for the proposed Longleaf Energy Associates power plant (OSAH-BNR-AQ-1115157-60-HOWELLS) on behalf of the Friends of the Chattahoochee and the Sierra Club).

167. Deposition (August 2011) on behalf of the United States in *United States of America v. Cemex, Inc.*, Civil Action No. 09-cv-00019-MSK-MEH (District of Colorado).

168. Deposition (July 2011) and Oral Testimony at Hearing (February 2012) on behalf of the Plaintiffs MYTAPN in the matter of Microsoft-Yes, Toxic Air Pollution-No (MYTAPN) v. State of Washington, Department of Ecology and Microsoft Corporation Columbia Data Center to the Pollution Control Hearings Board, State of Washington, Matter No. PCHB No. 10-162.

169. Oral Testimony at Hearing (March 2012) on behalf of the United States in connection with the Louisiana Generating NSR Case. *United States v. Louisiana Generating, LLC*, 09-CV100-RET-CN (Middle District of Louisiana).

170. Oral Testimony at Hearing (April 2012) on behalf of the New Hampshire Sierra Club at the State of New Hampshire Public Utilities Commission, Docket No. 10-261 – the 2010 Least Cost Integrated Resource Plan (LCIRP) submitted by the Public Service Company of New Hampshire (re. Merrimack Station Units 1 and 2).

171. Oral Testimony at Hearing (November 2012) on behalf of Clean Wisconsin in the matter of Application of Wisconsin Public Service Corporation for Authority to Construct and Place in Operation a New Multi-Pollutant Control Technology System (ReACT) for Unit 3 of the Weston Generating Station, before the Public Service Commission of Wisconsin, Docket No. 6690-CE-197.

172. Deposition (March 2013) in the matter of various Environmental Petitioners v. North Carolina DENR/DAQ and Carolinas Cement Company, before the Office of Administrative Hearings, State of North Carolina.

173. Deposition (August 2013) on behalf of the Sierra Club in connection with the Luminant Big Brown Case. *Sierra Club v. Energy Future Holdings Corporation and Luminant Generation Company LLC*, Civil Action No. 6:12-cv-00108-WSS (Western District of Texas, Waco Division).

174. Deposition (August 2013) on behalf of the Sierra Club in connection with the Luminant Martin Lake Case. *Sierra Club v. Energy Future Holdings Corporation and Luminant Generation Company LLC*, Civil Action No. 5:10-cv-0156-MHS-CMC (Eastern District of Texas, Texarkana Division).

175. Deposition (February 2014) on behalf of the United States in *United States of America v. Ameren Missouri*, Civil Action No. 4:11-cv-00077-RWS (Eastern District of Missouri, Eastern Division).

176. Trial Testimony (February 2014) in the matter of *Environment Texas Citizen Lobby, Inc and Sierra Club v. ExxonMobil Corporation et al.,* Civil Action No. 4:10-cv-4969 (Southern District of Texas, Houston Division).

177. Trial Testimony (February 2014) on behalf of the Sierra Club in connection with the Luminant Big Brown Case. *Sierra Club v. Energy Future Holdings Corporation and Luminant Generation Company LLC*, Civil Action No. 6:12-cv-00108-WSS (Western District of Texas, Waco Division).

178. Deposition (June 2014) and Trial (August 2014) on behalf of ECM Biofilms in the matter of the *US Federal Trade Commission (FTC) v. ECM Biofilms* (FTC Docket #9358).

179. Deposition (February 2015) on behalf of Plaintiffs in the matter of *Sierra Club and Montana Environmental Information Center (Plaintiffs) v. PPL Montana LLC, Avista Corporation, Puget Sound Energy, Portland General Electric Company, Northwestern Corporation, and Pacificorp (Defendants)*, Civil Action No. CV 13-32-BLG-DLC-JCL (US District Court for the District of Montana, Billings Division).

180. Oral Testimony at Hearing (April 2015) on behalf of Niagara County, the Town of Lewiston, and the Villages of Lewiston and Youngstown in the matter of CWM Chemical Services, LLC New York State Department of Environmental Conservation (NYSDEC) Permit Application Nos.: 9-2934-00022/00225, 9-2934-00022/00231, 9-2934-00022/00232, and 9-2934-00022/00249 (pending).

ED_006328A_00019660-00028

181. Deposition (August 2015) on behalf of Plaintiff in the matter of *Conservation Law Foundation (Plaintiff) v. Broadrock Gas Services LLC, Rhode Island LFG GENCO LLC, and Rhode Island Resource Recovery Corporation (Defendants)*, Civil Action No. 1:13-cv-00777-M-PAS (US District Court for the District of Rhode Island).

182. Testimony at Hearing (August 2015) on behalf of the Sierra Club in the matter of *Amendments to 35 Illinois Administrative Code Parts 214, 217, and 225* before the Illinois Pollution Control Board, R15-21.

183. Deposition (May 2015) on behalf of Plaintiffs in the matter of *Northwest Environmental Defense Center et. al., (Plaintiffs) v. Cascade Kelly Holdings LLC, d/b/a Columbia Pacific Bio-Refinery, and Global Partners LP (Defendants)*, Civil Action No. 3:14-cv-01059-SI (US District Court for the District of Oregon, Portland Division).

184. Trial Testimony (October 2015) on behalf of Plaintiffs in the matter of *Northwest Environmental Defense Center et. al., (Plaintiffs) v. Cascade Kelly Holdings LLC, d/b/a Columbia Pacific Bio-Refinery, and Global Partners LP (Defendants)*, Civil Action No. 3:14-cv-01059-SI (US District Court for the District of Oregon, Portland Division).

185. Deposition (April 2016) on behalf of the Plaintiffs in *UNatural Resources Defense Council, Respiratory Health Association, and Sierra Club (Plaintiffs) v. Illinois Power Resources LLC and Illinois Power Resources Generation LLC (Defendants)*, Civil Action No. 1:13-cv-01181 (Central District of Illinois, Peoria Division).

186. Trial Testimony at Hearing (July 2016) in the matter of Tesoro Savage LLC Vancouver Energy Distribution Terminal, Case No. 15-001 before the State of Washington Energy Facility Site Evaluation Council.

187. Trial Testimony (December 2016) on behalf of the challengers in the matter of the Delaware Riverkeeper Network, Clean Air Council, et. al., vs. Commonwealth of Pennsylvania Department of Environmental Protection and R. E. Gas Development LLC regarding the Geyer well site before the Pennsylvania Environmental Hearing Board.

188. Trial Testimony (July-August 2016) on behalf of the United States in *United States of America v. Ameren Missouri*, Civil Action No. 4:11-cv-00077-RWS (Eastern District of Missouri, Eastern Division).

189. Trial Testimony (January 2017) on the Environmental Impacts Analysis associated with the Huntley and Huntley Poseidon Well Pad Hearing on behalf citizens in the matter of the special exception use Zoning Hearing Board of Penn Township, Westmoreland County, Pennsylvania.

190. Trial Testimony (January 2017) on the Environmental Impacts Analysis associated with the Apex energy Backus Well Pad Hearing on behalf citizens in the matter of the special exception use Zoning Hearing Board of Penn Township, Westmoreland County, Pennsylvania.

191. Trial Testimony (January 2017) on the Environmental Impacts Analysis associated with the Apex energy Drakulic Well Pad Hearing on behalf citizens in the matter of the special exception use Zoning Hearing Board of Penn Township, Westmoreland County, Pennsylvania.

192. Trial Testimony (January 2017) on the Environmental Impacts Analysis associated with the Apex energy Deutsch Well Pad Hearing on behalf citizens in the matter of the special exception use Zoning Hearing Board of Penn Township, Westmoreland County, Pennsylvania.

193. Deposition Testimony (July 2017) on behalf of Plaintiffs in the matter of *Casey Voight and Julie Voight v Coyote Creek Mining Company LLC (Defendant)* Civil Action No. 1:15-CV-00109 (US District Court for the District of North Dakota, Western Division).

194. Deposition Testimony (November 2017) on behalf of Defendant in the matter of *Oakland Bulk and Oversized Terminal (Plaintiff) v City of Oakland (Defendant,)* Civil Action No. 3:16-cv-07014-VC (US District Court for the Northern District of California, San Francisco Division).

195. Deposition Testimony (December 2017) on behalf of Plaintiff in the matter of *Wildearth Guardians (Plaintiff) v Colorado Springs Utility Board (Defendant)* Civil Action No. 1:15-cv-00357-CMA-CBS (US District Court for the District of Colorado).

196. Deposition Testimony (January 2018) in the matter of National Parks Conservation Association (NPCA) v. State of Washington Department of Ecology and British Petroleum (BP) before the Washington Pollution Control Hearing Board, Case No. 17-055.

197. Trial Testimony (January 2018) on behalf of Defendant in the matter of *Oakland Bulk and Oversized Terminal (Plaintiff) v City of Oakland (Defendant,)* Civil Action No. 3:16-cv-07014-VC (US District Court for the Northern District of California, San Francisco Division).

198. Trial Testimony (April 2018) on behalf of the National Parks Conservation Association (NPCA) in the matter of NPCA v State of Washington, Department of Ecology and BP West Coast Products, LLC, PCHB No. 17-055 (Pollution Control Hearings Board for the State of Washington.

199. Deposition (June 2018) (harm Phase) on behalf of Plaintiffs in the matter of *Natural Resources Defense Council, Inc., Sierra Club, Inc., and Respiratory Health Association v. Illinois Power Resources LLC, and Illinois Power Resources Generating LLC (Defendants)*, Civil Action No. 1:13-cv-01181 (US District Court for the Central District of Illinois, Peoria Division).

200. Trial Testimony (July 2018) on behalf of Petitioners in the matter of *Coosa River Basin Initiative and Sierra Club (Petitioners) v State of Georgia Environmental Protection Division, Georgia Department of Natural Resources (Respondent) and Georgia Power Company (Intervenor/Respondent)*, Docket Nos: 1825406-BNR-WW-57-Howells and 1826761-BNR-WW-57-Howells, Office of State Administrative Hearings, State of Georgia.

201. Deposition (January 2019) and Trial Testimony (January 2019) on behalf of Sierra Club and Texas Campaign for the Environment (Appellants) in the contested case hearing before the Texas State Office of Administrative Hearings in Docket Nos. 582-18-4846, 582-18-4847 (Application of GCGV Asset Holding, LLC for Air Quality Permit Nos. 146425/PSDTX1518 and 146459/PSDTX1520 in San Patricio County, Texas).

202. Deposition (February 2019) and Trial Testimony (March 2019) on behalf of Sierra Club in the State of Florida, Division of Administrative Hearings, Case No. 18-2124EPP, Tampa Electric Company Big Bend Unit 1 Modernization Project Power Plant Siting Application No. PA79-12-A2.

203. Deposition (June 2019) relating to the appeal of air permits issued to PTTGCA on behalf of Appellants in the matter of *Sierra Club (Appellants) v. Craig Butler, Director, et. al., Ohio EPA (Appellees)* before the State of Ohio Environmental Review Appeals Commission (ERAC), Case Nos. ERAC-19-6988 through -6991.

204. Deposition (September 2019) on behalf of Appellants relating to the NPDES permit for the Cheswick power plant in the matter of *Three Rivers Waterkeeper and Sierra Club (Appellees) v. State of Pennsylvania Department of Environmental Protection (Appellee) and NRG Power Midwest (Permittee)*, before the Commonwealth of Pennsylvania Environmental Hearing Board, EHB Docket No. 2018-088-R.

205. Deposition (December 2019) on behalf of the Plaintiffs in the matter of David Kovac, individually and on behalf of wrongful death class of Irene Kovac v. BP Corporation North America Inc., Circuit Court of Jackson County, Missouri (Independence), Case No. 1816-CV12417.

206. Deposition (February 2020) and testimony at Hearing (August 2020, virtual) on behalf of Earthjustice in the matter of *Objection to the Issuance of PSD/NSR and Title V permits for Riverview Energy Corporation*, Dale, Indiana, before the Indiana Office of Environmental Adjudication, Cause No. 19-A-J-5073.

207. Hearing (July 14-15, 2020, virtual) on behalf of the Sierra Club in the matter of *the Application of the Ohio State University for a certificate of Environmental Compatibility and Public Need to Construct a Combined Heat and Power Facility in Franklin County, Ohio*, before the Ohio Power Siting Board, Case No. 19-1641-EL-BGN.

208. Hearing (September 2020, virtual) on behalf of WildEarth Guardians (petitioners) in the matter of *the Appeals of the Air Quality Permit No. 7482-M1 Issued to 3 Bear Delaware* Operating – *NM LLC (EIB No. 20-21(A) and Registrations Nos. 8729, 8730, and 8733 under General Construction Permit for Oil and Gas Facilities (EIB No. 20-33 (A)*, before the State of New Mexico, Environmental Improvement Board.

209. Deposition (December 2020, March 4-5, 2021, all virtual) in support of Petitioner's Motion for Stay of PSCAA NOC Order of Approval No. 11386 in the matter of the *Puyallup Tribe of Indians v. Puget Sound Clean Air Agency (PSCAA) and Puget Sound Energy (PSE),* before the State of Washington Pollution Control Hearings Board, PCHB No. P19-088.

210. Hearing (September 2020, virtual) on the *Initial Economic Impact Analysis (EIA) for A Proposal To* Regulate *NOx Emissions from Natural Gas Fired Rich-Burn Natural Gas Reciprocating Internal Combustion Engines (RICE) Greater Than 100 Horsepower* prepared on behalf of Earthjustice and the National Parks Conservation Association in the matter of Regulation Number 7, Alternate Rules before the Colorado Air Quality Control Commission.

211. Deposition (December 2020, virtual and Hearing February 2021, virtual) on behalf of the Plaintiffs (Shrimpers and Fishermen of the Rio Grande Valley represented by Texas RioGrande Legal Aid, Inc.) in the matter of the Appeal of Texas Commission on Environmental Quality (TCEQ) Permit Nos. 147681, PSDTX1522, GHGPSDTX172 for the Jupiter Brownsville Heavy Condensate Upgrader Facility, Cameron County, before the Texas State Office of Administrative Hearings, SOAH Docket No. 582-21-0111, TCEQ Docket No. 2020-1080-AIR.

212. Deposition (January 2021, virtual) on behalf of Plaintiffs in the matter of *PennEnvironment Inc., and Clean Air Council (Plaintiffs) and Allegheny County Health Department (Plaintiff-Intervenor) v. United States Steel Corporation (Defendant)*, Civil Action No. 2-19-cv-00484-MJH (US District Court for the Western District of Pennsylvania.)

213. Deposition (February 2021) on behalf of Plaintiffs in the matter of *Sierra Club Inc. (Plaintiff) v. GenOn Power Midwest LP (*Defendants*)*, Civil Action No. 2-19-cv-01284-WSS (US District Court for the Western District of Pennsylvania.)

ED_006328A_00019660-00031

Exhibit 2

UNITED STATES ENVIRONMENTAL PROTECTION AGENCY
CARIBBEAN ENVIRONMENTAL PROTECTION DIVISION
CITY VIEW PLAZA, SUITE 7000
#48 165 RD. KM 1.2
GUAYNABO, PR 00968-8069

031815

Manuel Mata
President
AES Puerto Rico, L.P.
P. O. Box 1890
Guayama, Puerto Rico 00785

Re: AES-PR Coal-Fired Power Plant and Marine Cargo Handling Dock Facility
Administrative Order on Consent
Docket Number CWA-02-2015-3102

Dear Mr. Mata:

This refers to the Administrative Order on Consent (AOC), Docket Number CWA-02-2015-3102, developed between representatives from AES Puerto Rico, L.P. and the U.S. Environmental Protection Agency (EPA). Enclosed please find a copy of the executed AOC, which incorporates the final injunctive relief agreed by AES and EPA.

If you have any questions regarding this AOC, please contact Mr. José A. Rivera, Multimedia Permits and Compliance Branch, at (787) 977-5842, or at rivera.jose@epa.gov.

Sincerely,

Jose C. Font
Director
Caribbean Environmental Protection Division

Enclosure

cc: Wanda Garcia, EQB (via e-mail w/ enclosure)

UNITED STATES ENVIRONMENTAL PROTECTION AGENCY
REGION 2

In the Matter of:

AES PUERTO RICO, L.P.
P. O. Box 1890
Guayama, Puerto Rico 00785

AES-PR Coal-Fired Power Plant and Marine Cargo Handling Dock Facility
Road PR-3, Km. 142, Jobos Ward
Guayama, Puerto Rico 00784

2008 MSGP Tracking Number PRR05BL65

Proceeding pursuant to Sections 308(a) and 309(a) of the Clean Water Act, 33 U.S.C. §§ 1318(a) and 1319(a).

ADMINISTRATIVE ORDER ON CONSENT

DOCKET NUMBER CWA-02-2015-3102

I. PRELIMINARY STATEMENT

1. This Order is issued pursuant to the authority vested in the Administrator of the United States Environmental Protection Agency (EPA) pursuant to Sections 308(a) and 309(a) of the Clean Water Act ("CWA" or the "Act"), 33 U.S.C. §§ 1318(a) and 1319(a).

2. The Administrator has delegated the authority to take these actions to the Regional Administrator of Region 2, who in turn, has delegated such authority to the Director of the Caribbean Environmental Protection Division.

II. STATUTORY AND REGULATORY AUTHORITIES

EPA contends that:

3. Section 301(a) of the CWA, 33 U.S.C. § 1311(a), provides in part that "[e]xcept as in compliance with [CWA Section 402], the discharge of any pollutant by any person shall be unlawful."

4. Section 402 of the CWA, 33 U.S.C. § 1342, defines the National Pollutant Discharge Elimination System (NPDES) as the national program for, among other things, issuing and enforcing discharge permits.

ED_006328A_00019661-00003

5. Section 402(a)(1) of the CWA, 33 U.S.C. § 1342(a)(1), provides that "the Administrator may, after opportunity for public hearing, issue a permit for the discharge of any pollutant. . . . upon condition that such discharge will meet . . . such requirements as the Administrator determines are necessary to carry out the provisions of the [CWA]."

6. Section 402(p) of the CWA, 33 U.S.C. § 1342(p), requires a NPDES permit with respect to a storm water discharge associated with industrial activity.

7. Section 402 of the CWA authorizes the Administrator to promulgate regulations for the implementation of the NPDES requirements.

8. Pursuant to the CWA, on April 1, 1983, EPA promulgated regulations to implement the NPDES program, under EPA Administered Permit Programs: the NPDES, at 40 C.F.R. § 122, as amended.

9. Pursuant to the NPDES regulations at 40 C.F.R. § 122.5(b), the NPDES program requires permits for the discharge of any pollutant from any point source into waters of the United States.

10. Pursuant to the NPDES regulations at 40 C.F.R. § 423.15, an operator of a steam electric power plant is required to comply with the effluent limitations developed for the steam electric point source category.

11. Pursuant to the NPDES regulations at 40 C.F.R. §§ 122.26(a)(1)(ii) and 122.26(b)(14), operators are required to obtain a NPDES permit for storm water discharges associated with industrial activity.

12. The CWA and its implementing NPDES regulations, as well as the applicable NPDES permits contain the following definitions:

    a. "Best Management Practices" or "BMPs" mean schedules of activities, prohibitions of practices, maintenance procedures, and other management practices to prevent or reduce the pollution of "waters of the United States." BMPs also include treatment requirements, operating procedures, and practices to control plant site runoff, spillage or leaks, sludge or waste disposal, or drainage from raw material storage, pursuant 40 C.F.R. § 122.2;

    b. "Bi-Monthly" means every two (2) months;

    c. "discharge of a pollutant" means any addition of any pollutant to navigable waters and/or waters of the United States from any point source. Section 502(12) of the CWA, 33 U.S.C. § 1362(12), and 40 C.F.R. § 122.2;

d. "facility" means any NPDES point source or any other facility or activity (including land or appurtenances thereto) that is subject to the regulations of the NPDES program. 40 C.F.R. § 122.2;

e. "navigable waters" means the waters of the United States, including the territorial seas. Section 502(7) of the CWA, 33 U.S.C. § 1362(7); "Waters of the United States" means all waters such as lakes, rivers, streams (including intermittent streams), mudflats, sandflats, wetlands, among others, and their tributaries. 40 C.F.R. § 122.2;

f. "industrial activity" means the 11 categories of industrial activities included in the definition of "storm water discharges associated with industrial activity" as defined in 40 C.F.R. §§ 122.26(b)(14)(i)-(xi);

g. "non-structural BMP" means best management practices that generally consist of processes, prohibitions, procedures, and schedules of activities that prevent pollutants associated with industrial activity from contacting with storm water discharges and authorized non-storm water discharges. They are considered low technology, cost-effective measures, and do not involve construction and installation, and usually work by changing behavior, persuasion and/or economic instruments;

h. "owner" or "operator" means the owner or operator of any facility or activity subject to regulation under the NPDES program. 40 C.F.R. § 122.2;

i. "operator" means any entity with a storm water discharge associated with industrial activity that meets either of the following two criteria as defined in Appendix A of the 2008 NPDES Multi-Sector General Permit for Storm Water Discharges Associated with Industrial Activity:

   1) the entity has operational control over industrial activities, including the ability to modify those activities; or

   2) the entity has day-to-day operational control of activities at a facility necessary to ensure compliance with the permit (e.g., the entity is authorized to direct workers at a facility to carry out activities required by the permit);

j. "person" means an individual, corporation, partnership or association. Section 502(5) of the CWA, 33 U.S.C. § 1362(5), and 40 C.F.R. § 122.2;

k. "point source" means any discernible, confined and discrete conveyance, including but not limited to any pipe, ditch, channel, tunnel, conduit, well, discrete fissure, container, rolling stock, concentrated animal feeding operation, or vessel or other floating craft, from which pollutants are or may

be discharged. Section 502(14) of the CWA, 33 U.S.C. § 1362(14), and 40 C.F.R. § 122.2;

l. "pollutant" includes solid waste, dredged spoil, rock, sand, cellar dirt, sewage, sewage sludge and industrial, municipal and agricultural waste discharged into water. Section 502(6) of the CWA, 33 U.S.C. § 1362(6), and 40 C.F.R. § 122.2;

m. "Standard Operating Procedure(s)" or "SOP(s)" means the established or prescribed method(s) prepared by Respondent to be followed routinely for the performance of designated environmental compliance activities, operations, or in designated situations;

n. "storm water associated with industrial activity" means the discharge from any conveyance which is used for collecting and conveying storm water and which is directly related to manufacturing, processing or raw materials storage areas at an industrial plant. 40 C.F.R. §§ 122.2 and 122.26(b)(14);

o. "structural BMP" means the fixed, permanent physical structures and equipment requiring planning, design construction and maintenance that are designed to remove pollutants from storm water runoff, reduce downstream erosion, provide flood control and promote groundwater recharge; and

p. "Substantial Completion" means, when used in reference to Structural BMPs and construction projects required under this Order, the date, as certified by a Licensed Engineer in charge of a construction project who is authorized to conduct the engineering profession in the Commonwealth of Puerto Rico, when the Structural BMP or construction project or specified part thereof is sufficiently completed in accordance with the design drawings and specifications, such that the project or specified part thereof can be used to accomplish the purposes for which it was intended.

13. On September 29, 2008, EPA re-issued the NPDES Multi-Sector General Permit for Storm Water Discharges Associated with Industrial Activity (MSGP). The MSGP became effective on September 29, 2008, and expired on September 29, 2013. Pursuant to 5 U.S.C. § 558(c) and 40 C.F.R. § 122.6(a), coverage under the MSGP was administratively extended for those operators who obtained coverage under the MSGP prior to its expiration date (September 29, 2013).

14. The MSGP established Notice of Intent (NOI) requirements, development and implementation of Storm Water Pollution Prevention Plans (SWPPP), inspections, monitoring, reporting, recordkeeping and other special and general conditions.

15. The MSGP requires a facility operator who seeks coverage under the MSGP to submit a complete NOI form in order to obtain authorization to discharge storm water associated with industrial activity.

16. The MSGP requires the selection, design, and construction/implementation of control measures, such as non-structural and structural BMPs, to meet the non-numeric effluent limits contained in the MSGP (Section 2.1). The selection, design, installation, and implementation of the control measures must be in accordance with good engineering practices and manufacturer's specifications.

17. Part 2.1.2.1 (Minimize Exposure) of the MSGP requires the operator to minimize the exposure of material storage areas (i.e., loading and unloading, storage) to rain and runoff by either locating these industrial materials and activities inside or protecting them with storm resistant coverings. The MSGP does not recommend significant enlargement of impervious surface areas.

18. Part 2.1.2.2 (Good Housekeeping) of the MSGP requires the operator to keep clean all exposed areas that are potential sources of pollutants, using such measures as sweeping at regular intervals.

19. Part 2.1.2.3 (Maintenance) of the MSGP requires the operator to regularly maintain and repair systems to avoid situations that may result in releases of pollutants in stormwater discharged to receiving waters.

20. Part 2.1.2.5 (Erosion and Sediment Controls) of the MSGP requires the operator to stabilize exposed areas and contain runoff using structural and/or non-structural BMPs to minimize on-site erosion and sedimentation, and the resulting discharge of pollutants. Place flow velocity dissipation devices at discharge locations and within outfall channels where necessary to reduce erosion and/or settle out pollutants.

21. Part 2.1.2.6 (Management of Runoff) of the MSGP requires the operator to divert, infiltrate, reuse, contain, or otherwise reduce storm water runoff, to minimize pollutants in the discharges.

22. Part 2.1.2.12 (Dust Generation & Vehicle Tracking of Industrial Materials) of the MSGP requires the operator to minimize generation of dust and off-site tracking of raw, final, or waste materials.

23. Part 3.2 (Conditions Requiring Review to Determine if Modifications Are Necessary) of the MSGP requires the operator to review the selection, design, installation, and implementation of control measures to determine if modifications are necessary to meet the effluent limits in the MSGP when the average of four (4) quarterly sampling results exceeds an applicable benchmark.

24. Part 7.1 (Reporting Monitoring Data to EPA) of the MSGP requires the operator to submit all monitoring data collected pursuant to Parts 6.2 and 6.3 of the MSGP to EPA using EPA's online eNOI system (www.epa.gov/npdes/eNOI) no later than thirty (30) days (email date or postmark date) after the operator has received the complete laboratory results for all monitored outfalls for the reporting period. If the operator cannot access eNOI, paper reporting forms must be submitted by the same deadline in accordance with Part 7.6.1 of the MSGP.

25. Part 8.O.4.1 (Fugitive Dust Emissions) of the MSGP requires the operator to minimize fugitive dust emissions from coal handling areas.

26. Part 8.O.4.11 (Ash Loading Areas) of the MSGP requires the operator to reduce or control the tracking of ash and residue from ash loading areas, and to clear the ash building floor and immediately adjacent roadways of spillage, debris, and excess water before departure of each loaded vehicle.

27. Part 8.O.4.12 (Areas Adjacent to Disposal Ponds) of the MSGP requires the operator to minimize contamination of surface runoff from areas adjacent to disposal ponds, reduce ash residue that may be tracked on to access roads traveled by residue handling vehicles, and reduce ash residue on exit roads leading into and out of residue handling areas.

28. Part B.1 (Duty to Comply) of the MSGP requires the operator to comply with all conditions of the MSGP. Any permit noncompliance constitutes a violation of the CWA and is grounds for enforcement action; for permit termination, revocation and reissuance, or modification; or for denial of a permit renewal application.

29. Part B.4 (Duty to Mitigate) of the MSGP requires the operator to take all reasonable steps to minimize or prevent any discharge in violation of this permit which has a reasonable likelihood of adversely affecting human health or the environment.

30. Section 308(a)(A) of the CWA provides that "[w]henever required to carry out the objective of . . . [CWA Section 402] the Administrator shall require the owner or operator of any point source to (i) establish and maintain such records, (ii) make such reports, (iii) install, use, and maintain such monitoring equipment or methods (including where appropriate, biological monitoring methods), (iv) sample such effluents (in accordance with such methods, at such locations, at such intervals, and in such manner as the Administrator shall prescribe), and (v) provide such other information as [the Administrator] may reasonably require."

31. Section 309(a)(3) of the CWA provides that "[w]henever on the basis of any information available . . . the Administrator finds that any person is in violation of [CWA Sections 301 and 308], or is in violation of any permit condition or limitation implementing any of such sections in a permit issued under [Section 402 of the Act, the Administrator] shall issue an order requiring such person to comply with such section…."

32. Section 309(a)(5)(A) of the CWA provides that "[a]ny order issued under [CWA Section 309] shall state with reasonable specificity the nature of the violation, and shall specify a time for compliance . . . taking into account the seriousness of the violation and any good faith efforts to comply with applicable requirements."

33. EPA is the agency within the Commonwealth of Puerto Rico with authority to administer the federal NPDES program. EPA maintains enforcement authority for violations of the CWA and its implementing regulations.

III. JURISDICTIONAL FINDINGS

EPA makes the following findings of fact:

34. AES Puerto Rico, L.P. (Respondent) is a corporation organized under the laws of the State of Delaware, United States of America. Respondent is registered with the Puerto Rico Department of State under registration number 11062.

35. Respondent is the owner and operator, as defined at 40 CFR §122.2, of a coal-fired steam power plant and a marine cargo handling dock facility (hereinafter jointly referred as the "Facility") located at Road PR-3, Km. 142, Jobos Ward, Guayama, Puerto Rico 00784.

36. The operations at the coal-fired steam power plant are best described by the Standard Industrial Classification (SIC) Code 4911. This classification covers establishments primarily engaged in the generation, transmission, and/or distribution of electricity or gas or steam.

37. The operations at the marine cargo handling dock facilities are best described by SIC Code 4491. This classification includes docks, piers, terminals, staging areas, or in-transit areas, in which cargo loading or unloading operations take place.

38. 40 C.F.R. § 122.26(b)(14)(vii) addresses those facilities identified with SIC Code 4911.

39. 40 C.F.R. § 122.26(b)(14)(viii) addresses those facilities identified with SIC Code 4491.

40. Respondent's operations at the Facility are classified as "industrial activity" as defined in 40 C.F.R. §§ 122.26(b)(14)(vii) and (viii).

41. Respondent is a "person" pursuant to Section 502(5) of the CWA, 33 U.S.C. § 1362(5).

42. Respondent's Facility is a "point source" pursuant to Section 502(14) of the CWA, 33 U.S.C. § 1362(14).

43. Respondent "discharges pollutants" from the coal-fired steam power plant into wetlands immediately adjacent to Las Mareas Bay.

44. Respondent "discharges pollutants" from the marine cargo handling dock facility into Las Mareas Bay.

45. The wetlands adjacent to Las Mareas Bay are waters of the United States within the meaning of Section 502(7) of the CWA, 33 U.S.C. § 1362(7).

46. Las Mareas Bay is a navigable water of the United States within the meaning of Section 502(7) of the CWA, 33 U.S.C. § 1362(7).

47. Respondent is subject to the provisions of the CWA, 33 U.S.C. § 1251, *et seq.*, and the applicable NPDES permit application regulations found at 40 C.F.R. Part 122. Respondent was required to apply for and obtain NPDES permit coverage for the Facility's discharges of pollutants into waters of the United States pursuant to Section 402(p) of the CWA, 33 U.S.C. § 1342(p).

IV. FINDINGS OF FACTS

EPA makes the following findings of fact:

48. Respondent began operations at the Facility on or about November 2002.

49. On July 20, 2011 and July 26, 2011, an EPA Region 2 enforcement officer conducted a Compliance Evaluation Inspection (CEI) of the Facility. The purpose of the Inspection was to determine Respondent's compliance with the CWA, the NPDES regulations, and the MSGP. The findings of the CEI were summarized in the NPDES Water Compliance Inspection Report (CEI Report), dated October 3, 2011.

50. Based on the findings of the CEI and further investigations, EPA found Respondent to be in violation of the CWA and the applicable NPDES regulations for its discharges of pollutants into waters of the United States without NPDES permit coverage, and for its failure to apply for a NPDES permit.

51. On December 16, 2011, EPA issued to Respondent an Administrative Compliance Order (ACO), Docket Number CWA-02-2012-3100, in an effort to bring Respondent into compliance with the CWA and its implementing NPDES regulations.

52. The ACO included twenty eight (28) Ordered Provisions, including compliance dates. Respondent has submitted to EPA nineteen (19) Bi-Monthly Status Reports between December 22, 2011 and January 28, 2015. Respondent reported and provided documentation of the actions taken for the required period, including photo-documentation and compliance cost.

53. By letter dated May 5, 2013, EPA approved the structural BMPs matrix and schedule included in Respondent's ninth Bi-Monthly Status Report, dated May 15, 2013, in accordance with Provision 7 of the ACO.

54. On August 29, 2013, Respondent filed a modification to the NOI form to seek coverage under the MSGP for the storm water discharges associated with industrial activity from the Facility and the marine cargo handling dock into waters of the United States. Respondent obtained MSGP coverage beginning on September 29, 2013.

55. Based on an EPA Region 2 enforcement officer's review of the eleventh and twelve Bi-Monthly Status Reports, dated September 30, 2013 and November 21, 2013, respectively, Respondent notified EPA of its completion of the construction of the structural BMPs, the removal of construction BMPs, and the clean-up of construction areas, including the contractor compound areas, at the Facility. Also, Respondent notified EPA that it had not completed the cleaning/maintenance of the coal pile runoff pond.

56. On June 19, 2014, two (2) EPA Region 2 enforcement officers conducted an Enforcement Case Support Inspection (ECSI) of the Facility. The purpose of the ECSI was to determine Respondent's compliance with the ACO and the MSGP.

57. The findings of the ECSI were summarized in the NPDES Water Compliance Inspection Report (ECSI Report), dated August 26, 2014. Respondent received a copy of the ECSI Report on December 2, 2014.

58. On January 28, 2015, Respondent provided written notice to EPA that it had completed the cleaning/maintenance of the coal pile runoff pond, implemented non-structural and structural BMPs, completed the preparation of the SWPPP, and conducted other activities to address the findings of the ECSI Report and the AOC's pending actions.

59. Based upon an EPA Region 2 enforcement officer walkthrough of the Facility on January 28, 2015, and further review of Respondent's submittals, EPA found Respondent to be in non-compliance with the MSGP and ACO, as set forth below:

    a. failure to provide a Final Progress Report indicating and documenting the implementation of the non-structural BMPs and structural BMPs at the Facility, per the EPA May 5th, 2013 letter;

    b. Part 2.1.2.5 (Erosion and Sediment Controls) – lack of soil stabilization in areas near the coal pile, limestone dome, and coal pile runoff pond;

    c. Part 2.1.2.5 (Erosion and Sediment Controls) – lack of installation and/or replacement of the silt fence in the perimeter of the coal storage piles and coal handling areas;

d. Part 2.1.2.12 (Dust Generation & Vehicle Tracking of Industrial Materials) – lack of a dust and fugitive emissions control plan for areas in which ashes are handled (*e.g.*, Agremax™ storage pile);

e. Part 3.2 (Conditions Requiring Review to Determine if Modifications Are Necessary) – did not address the exceedances of the applicable benchmarks (e.g., aluminum and iron) for the period up to June 2014 concerning storm water discharges through outfalls 001 and 002;

f. failure to prepare and submit the comprehensive site inspection reports pursuant to Part 4.3.2 of the MSGP for the December 13, 2012 and December 19, 2013 comprehensive site inspections; and

g. Part 7.1 (Reporting Monitoring Data to EPA) – failure to submit MSGP discharge monitoring report forms (MDMR forms) all monitoring data collected since Respondent obtained MSGP coverage on September 29, 2013.

V. CONCLUSIONS OF LAW

EPA concludes:

60. As described in Paragraphs 48-58 above, EPA finds Respondent in violation of certain requirements of the MSGP, which require implementation of measures to bring the Facility into compliance with the CWA.

61. Respondent's non-compliance is subject to an enforcement action pursuant to Section 309 of the CWA, 33 U.S.C. § 1319.

VI. CONSENT

62. Respondent and EPA have negotiated this Order in good faith, which Order is fair, reasonable, and consistent with the goals of the CWA.

63. Respondent neither admits nor denies the factual allegations contained herein. Without admitting liability for the violations asserted in this Order or the factual allegations set forth therein, Respondent admits that EPA has the jurisdiction and authority under Section 309(a) of the CWA to issue this Order and agrees to be bound by this Order.

64. The Ordered Provisions (Part VII) of this Order shall be binding upon Respondent, its officers, directors, agents, servants, authorized representatives and successors and assigns.

VII. ORDERED PROVISIONS

In consideration of the above Statutory and Regulatory Authorities, Jurisdictional Findings, and Findings of Fact, and pursuant to the authority in Section 309 of the CWA, 33 U.S.C. § 1319, EPA has determined that compliance with the following requirements is reasonable, and Respondent so agrees. The Ordered Provisions contained in the ACO, Docket Number CWA-02-2012-3100, are superseded by the Ordered Provisions contained hereinafter.

EPA HEREBY ORDERS AND RESPONDENT HEREBY CONSENTS THAT:

65. **Except as otherwise indicated in this Order**, at all times Respondent shall comply with the CWA, its NPDES implementing regulations, the MSGP, and any NPDES permit Respondent subsequently applies for and obtains.

66. **Within thirty (30) calendar days of the Effective Date of this Order**, Respondent shall complete and submit the MDMR forms for the benchmark monitoring conducted pursuant to the requirements of the ACO and MSGP.

67. **Within thirty (60) calendar days of the Effective Date of this Order**, Respondent shall prepare, for EPA review and approval, a storm water sampling SOP (SW Sampling SOP) to conduct, document and submit storm water sampling data reports according to the quarterly visual assessment of storm water discharges and benchmark monitoring requirements in the MSGP. Respondent shall begin implementing the SW Sampling SOP upon its submission to EPA for review and approval. Any changes required to the SW Sampling SOP by EPA shall be made by Respondent within thirty (30) calendar days of EPA's request and be fully implemented at that time.

    The SW Sampling SOP shall at a minimum:

    a. establish procedures for the collection, analysis, documentation, recordkeeping, and reporting of storm water discharges;

    b. include, as an appendix, a flow chart describing the key features of the SW Sampling SOP that are relevant to conducting quarterly visual assessments and benchmark monitoring at each permanent sampling point;

    c. feature a map depicting all permanent sampling locations;

    d. describe the use and management of rain gauge data pursuant to the Rain Gauge SOP, which was developed by Respondent pursuant to the ACO;

    e. describe the sampling equipment, preservation of samples, approved laboratory methods, and the use and completion of a Chain of Custody Record (referred herein as "CCR") according to the MSGP; and

ED_006328A_00019661-00013

f. include hands-on and room training for the Pollution Prevention Team members, qualified personnel, and any other employees and contractors responsible for supervision and performance of storm water sampling.

68. **Upon the Effective Date of this Order and for a period of one year**, Respondent shall conduct benchmark monitoring and analyze samples according to Part 6.1.3 (measurable storm event), Part 6.1.4 (sample type), Part 6.1.5 (adverse weather condition), Part 6.1.7 (monitoring periods), Part 6.2.1.1 (applicability of benchmark monitoring), Part 6.2.1.2 (benchmark monitoring schedule), Part 8.O.7 (sector-specific benchmark for steam electric power generating facilities) and Part 8.Q.6 (sector-specific for water transportation) of the MSGP. Also, Respondent shall:

a. monitor at least once at the permanent sampling points 001, 002, and 003 (SP-001, SP-002, and SP-003, respectively) in each of the following 3-month intervals: January 1 – March 31; April 1 – June 30; July 1 – September 30; and October 1 – December 31;

b. analyze the samples for total aluminum, total iron, total lead and total zinc;

c. document monitoring activities and laboratory reports for each sampling point; and

d. prepare MDMR forms within thirty (30) days of receiving the laboratory results. Respondent shall use the MDMR available at the EPA's web site at http://water.epa.gov/polwaste/npdes/stormwater/.

69. **Until Termination of this Order**, Respondent shall prepare and submit MDMR referred to in Paragraph 67 above, in accordance with the schedules established therein.

70. **Within thirty (30) calendar days of the Effective Date of this Order**, Respondent shall submit a detailed report concerning the implementation of each of the action items included in the BMPs Matrix table and schedule, which EPA approved in its May 5, 2013 letter. Respondent shall supplement this information with documentation, which shall include at a minimum, photo-documentation and an updated BMPs Matrix table.

71. **Within thirty (30) calendar days of the Effective Date of this Order**, Respondent shall prepare and submit the comprehensive site inspection reports pursuant to Part 4.3.2 of the MSGP for the December 13, 2012 and December 19, 2013 comprehensive site inspections.

72. **Within sixty days (90) calendar days of the Effective Date of this Order**, Respondent shall prepare and submit a detailed Plan of Action (POA), for EPA review and approval, and subsequent implementation by Respondent, which shall include at a minimum:

a. a review and revision of the selection, design, installation, and implementation of Respondent's control measures in accordance with Part 3 of the MSGP;

b. a description of each action to be taken to comply with Part 3.2 (Conditions Requiring Review to Determine if Modifications Are Necessary) and Part 6.2.1.2 (Benchmark Monitoring Schedule) of the MSGP, which requires Respondent to review the selection, design, installation, and implementation of control measures to determine if modifications are necessary to meet the effluent limits in the MSGP. Specifically, Respondent shall perform this review for aluminum and iron; and

c. a plan for the minimization and control of dust (including fugitive dust) from coal combustion residuals and/or Agremax™ at the Facility and during transport (hereinafter, the "Dust Control Plan"). The Dust Control Plan shall include site management procedures such as wetting the Agremax™ storage pile at the Facility to ensure compliance with applicable MSGP requirements relating to dust control, and an implementation schedule.

73. **Respondent's POA, and its amendments thereto**, shall be signed and certified by a licensed engineer who is authorized to conduct the engineering profession in the Commonwealth of Puerto Rico. This licensed engineer shall have demonstrated expertise in design and implementation of fugitive dust minimization and controls; engineering practices for soil stabilization practices, storm water management, and pollution prevention.

74. **Within thirty (30) days or by such other deadline approved by EPA,** Respondent shall modify the POA to address EPA's comments. Respondent shall, upon approval by EPA, implement the POA. Defendants shall proceed to take any actions required by the approved POA, in accordance to the schedule contained therein, as approved in writing by EPA.

75. **No later than sixty (60) days after the Effective Date of this Order,** Respondent shall create, in addition to the existing Environmental Coordinator Position, a Storm Water Compliance Coordinator (Coordinator) position at the Facility. The Coordinator shall be:

a. an employee of Respondent who has the education, experience and skills to manage compliance with storm water management requirements including the control measures and BMPs at the Facility, with the authority to direct Respondent's employees in connection with storm water compliance activities;

b. responsible for: (i) overseeing the preparation, amendment, and certification of the SWPPP; (ii) providing and/or coordinating applicable environmental training to the Facility's personnel; (iii) conducting quarterly

and routine inspections; (iv) assisting employees and/or contractors with the installation, maintenance and improvement of non-structural and structural BMPs; (v) conducting comprehensive site inspections; (vi) determining if appropriate actions have been timely made to address compliance violations or to make improvements to BMPs; (vii) coordinating the pick-up and analysis of storm water samples; (viii) monitoring compliance with this Order; and (ix) preparing and submitting Reports to EPA; and

c. an advisor to Respondent's officers with respect to compliance with the MSGP and this Order.

76. **No later than sixty (60) days after the Effective Date of this Order**, Respondent shall submit a certification stating that Respondent created the position of, and hired, the Coordinator referenced in Paragraph 75, above.

77. **Until Termination of this Order**, Respondent shall prepare and submit Quarterly Progress Reports (QPR) that describe the current status and progress of Respondent's actions taken to comply with the provisions of this Order. Respondent shall:

a. submit each QPR to EPA no later than the fifteenth (15th) day of the month following the month that is the subject of the report; and

b. indicate in the QPR, at a minimum, the following:

1) the specific activities undertaken by Respondent relating to the completion of work required under this Order, including, but not limited to, the expected date for the Substantial Completion, and identification of those requirements which have been accomplished since the previous QPR, including the dates of Substantial Completion of any of the remedial actions, capital improvements, or any other actions identified in this Order;

2) any impediments Respondent encountered in meeting the compliance schedules, the steps that Respondent has taken to overcome such impediments, and the steps that Respondent will take to overcome such impediments, including the anticipated dates by which such steps will be taken; and

3) a cost report detailing the expenses incurred as of the date of the QPR.

If Respondent has already submitted a deliverable to EPA, Respondent shall reference that deliverable in the QPR and its date of submission, instead of submitting another copy of that deliverable to EPA.

VIII. GENERAL PROVISIONS

78. Any questions concerning this Order should be directed to José A. Rivera, Senior Environmental Engineer, Multimedia Permits and Compliance Branch, Caribbean Environmental Protection Division, at (787) 977-5842 / rivera.jose@epa.gov.

79. Any documents to be submitted by Respondent as part of this Order shall be sent by certified mail or its equivalent, and shall be signed by an authorized representative of the respective entity (see 40 C.F.R. § 122.22), and shall include the following certification:

> "I certify under penalty of law that this document and all attachments were prepared under my direction or supervision in accordance with a system designed to assure that qualified personnel properly gathered and evaluated the information submitted. Based on my inquiry of the person or persons who manage the system, or those persons directly responsible for gathering the information, the information submitted is, to the best of my knowledge and belief, true, accurate, and complete. I am aware that there are significant penalties for submitting false information, including the possibility of fine and imprisonment for knowing violations."

80. All documents required to be submitted under this Order shall be sent to the following addresses:

Director, Water Quality Area
Environmental Quality Board
P. O. Box 11488
San Juan, Puerto Rico 00910,

and

Chief, Multimedia Permits and Compliance Branch
Caribbean Environmental Protection Division
U.S. Environmental Protection Agency, Region 2
City View Plaza II, Suite 7000
48 RD. 165 Km. 1.2
Guaynabo, Puerto Rico 00968-8069.

81. Respondent waives any and all claims for relief and otherwise available rights to administrative or judicial review of any issue of law or fact, or any other provision, set forth in this Order, including, but not limited to, any right of judicial review of this Order under the Administrative Procedure Act, 5 U.S.C. §§ 701-708.

82. Notwithstanding any other provision of this Order, Respondent reserves its rights to contest liability in any subsequent action filed by EPA to seek penalties for a

violation of this Order, and reserves its rights to contest liability in any subsequent action for any violations EPA has alleged in this Order. Respondent reserves all defenses to any action asserted or taken by EPA under its reservations in this Order or otherwise.

83. This Order does not constitute a waiver from compliance with, or a modification of, the effective terms and conditions of the CWA, its implementing regulations, or any applicable permit, which remain in full force and effect. This Order is an enforcement action taken by EPA to ensure swift compliance with the CWA. Issuance of this Order shall not be deemed an election by EPA to forego any civil or criminal actions for penalties, fines, imprisonment, or other appropriate relief under the CWA.

84. Notice is hereby given that should EPA commence an action in a United States District Court for a violation of any Ordered Provision of this Order, Respondent may be subject to: (1) civil penalties up to $37,500 per day for each day of violation, pursuant to Section 309(d) of the CWA, 33 U.S.C. § 1319(d); and/or (2) injunctive relief, pursuant to Section 309(b) of the CWA, 33 U.S.C. § 1319(b), as imposed by the Court.

85. If any provision of this Order is held by a court of competent jurisdiction to be invalid, any surviving provisions shall remain in full force and effect.

IX. DELAY OF PERFORMANCE/FORCE MAJEURE

86. "Force Majeure," for purposes of this Order, is any event entirely beyond the control of Respondent or any entity controlled by Respondent that delays or prevents performance of any obligation under this AOC, notwithstanding Respondent's best efforts to avoid the delay. The best efforts requirement includes using best efforts to anticipate any such event and to minimize the delay caused by any such event to the greatest extent practicable. Examples of events that are not force majeure events include, but are not limited to, increased costs or expenses of any work to be performed under this AOC, Respondent's financial or business difficulties, and normal inclement weather.

87. Unless otherwise specified, if any event may occur or has occurred that may delay the performance of any obligation under this Order, whether or not caused by a force majeure, Respondent shall notify by telephone the EPA contact identified in Paragraph 78 of this Order, or, in his absence, the Multimedia Permits and Compliance Branch Chief identified in Paragraph 79, Caribbean Environmental Protection Division, EPA, Region 2, within four (4) business days of when Respondent knew or reasonably should have known that the event might cause a delay. Within fifteen (15) calendar days thereafter, Respondent shall provide in writing the reasons for the delay, the anticipated duration of the delay, the measures taken or to be taken to prevent or minimize the delay, and a timetable by which those measures will be implemented. Respondent shall exercise its best

efforts to avoid or minimize any delay and any effects of a delay. Failure to comply with the notice requirement of this paragraph shall preclude Respondent from asserting any claim of force majeure.

88. If EPA agrees that an actual or anticipated delay is attributable to force majeure, the time for performance of the obligation shall be extended by written agreement of the parties. An extension of the time for performing an obligation directly affected by the force majeure event shall not, of itself, extend the time for performing a subsequent obligation. The time of performance of any subsequent obligation that is directly impacted by an extension of time granted for an obligation due to a force majeure event shall be extended at the request of the Respondent. EPA will review Respondent's request and will provide a new set of compliance date(s) in writing, if deemed necessary.

89. Respondent shall have the burden of demonstrating, by a preponderance of the evidence, that the actual or anticipated delay has been or will be caused by a force majeure event, that the duration of the delay was or will be warranted under the circumstances, that Respondent did exercise or is using its best efforts to avoid and mitigate the effects of the delay, and that Respondent complied with the requirements of this section.

X. TERMINATION AND SATISFACTION

90. After Respondent has complied with all the Ordered Provisions of this Order, Respondent may serve upon EPA a Request for Termination, stating that Respondent has satisfied those requirements, together with all necessary supporting documentation.

91. Following receipt by EPA of Respondent's Request for Termination, within thirty (30) calendar days or at another mutually agreed upon time, EPA and Respondent shall confer informally concerning the Request and any disagreement that EPA and Respondent may have as to whether Respondent has satisfactorily complied with the requirements for termination of this Order. If EPA agrees, it will close-out this Order by informing Respondent in writing of such decision. However, the determination to close-out this Order shall be solely in the discretion of EPA.

92. Any violation of this Order may be grounds for EPA to terminate this Order in its sole discretion.

XI. EFFECTIVE DATE AND EFFECT OF CONSENT

93. This Order shall become effective upon the date of execution by the undersigned Director, Caribbean Environmental Protection Division, Region 2, EPA.

94. Each undersigned signatory to this Order certifies that he is duly and fully authorized to enter into or ratify this Order and all of the applicable terms and conditions set forth herein.

95. Respondent and EPA shall bear their own costs of this Order, including attorneys' fees.

96. Respondent hereby consents to the issuance of this Order and agrees to be bound thereby.

97. Nothing in this Order limits Respondent's obligations to comply with the requirements of all applicable federal and Commonwealth of Puerto Rico laws and regulations.

FOR AES PUERTO RICO, L.P.:

_____ Dated: 3/18/15

MANUEL MATA
Plant Manager
AES PUERTO RICO, L.P.
P. O. Box 1890
Guayama, Puerto Rico 00785

FOR UNITED STATES ENVIRONMENTAL PROTECTION AGENCY, REGION 2:

_____ Dated: 3-18-15

JOSÉ C. FONT
Director
Caribbean Environmental Protection Division
Environmental Protection Agency, Region 2
City View Plaza II, Suite 7000
48 RD. 165 Km. 1.2
Guaynabo, Puerto Rico 00968-8069

Exhibit 3

UNITED STATES ENVIRONMENTAL PROTECTION AGENCY
CARIBBEAN ENVIRONMENTAL PROTECTION DIVISION
CITY VIEW PLAZA, SUITE 7000
#48 165 RD. KM 1.2
GUAYNABO, PR 00968-8069

031815

Manuel Mata
President
AES Puerto Rico, L.P.
P. O. Box 1890
Guayama, Puerto Rico 00785

Re: AES-PR Coal-Fired Power Plant and Marine Cargo Handling Dock Facility
Administrative Order on Consent
Docket Number CWA-02-2015-3102

Dear Mr. Mata:

This refers to the Administrative Order on Consent (AOC), Docket Number CWA-02-2015-3102, developed between representatives from AES Puerto Rico, L.P. and the U.S. Environmental Protection Agency (EPA). Enclosed please find a copy of the executed AOC, which incorporates the final injunctive relief agreed by AES and EPA.

If you have any questions regarding this AOC, please contact Mr. José A. Rivera, Multimedia Permits and Compliance Branch, at (787) 977-5842, or at rivera.jose@epa.gov.

Sincerely,

Jose C. Font
Director
Caribbean Environmental Protection Division

Enclosure

cc: Wanda Garcia, EQB (via e-mail w/ enclosure)

UNITED STATES ENVIRONMENTAL PROTECTION AGENCY
REGION 2

In the Matter of:

AES PUERTO RICO, L.P.
P. O. Box 1890
Guayama, Puerto Rico 00785

AES-PR Coal-Fired Power Plant and Marine Cargo Handling Dock Facility
Road PR-3, Km. 142, Jobos Ward
Guayama, Puerto Rico 00784

2008 MSGP Tracking Number PRR05BL65

Proceeding pursuant to Sections 308(a) and 309(a) of the Clean Water Act, 33 U.S.C. §§ 1318(a) and 1319(a).

ADMINISTRATIVE ORDER ON CONSENT

DOCKET NUMBER CWA-02-2015-3102

I. PRELIMINARY STATEMENT

1. This Order is issued pursuant to the authority vested in the Administrator of the United States Environmental Protection Agency (EPA) pursuant to Sections 308(a) and 309(a) of the Clean Water Act ("CWA" or the "Act"), 33 U.S.C. §§ 1318(a) and 1319(a).

2. The Administrator has delegated the authority to take these actions to the Regional Administrator of Region 2, who in turn, has delegated such authority to the Director of the Caribbean Environmental Protection Division.

II. STATUTORY AND REGULATORY AUTHORITIES

EPA contends that:

3. Section 301(a) of the CWA, 33 U.S.C. § 1311(a), provides in part that "[e]xcept as in compliance with [CWA Section 402], the discharge of any pollutant by any person shall be unlawful."

4. Section 402 of the CWA, 33 U.S.C. § 1342, defines the National Pollutant Discharge Elimination System (NPDES) as the national program for, among other things, issuing and enforcing discharge permits.

ED_006328A_00019662-00003

5. Section 402(a)(1) of the CWA, 33 U.S.C. § 1342(a)(1), provides that "the Administrator may, after opportunity for public hearing, issue a permit for the discharge of any pollutant. . . . upon condition that such discharge will meet . . . such requirements as the Administrator determines are necessary to carry out the provisions of the [CWA]."

6. Section 402(p) of the CWA, 33 U.S.C. § 1342(p), requires a NPDES permit with respect to a storm water discharge associated with industrial activity.

7. Section 402 of the CWA authorizes the Administrator to promulgate regulations for the implementation of the NPDES requirements.

8. Pursuant to the CWA, on April 1, 1983, EPA promulgated regulations to implement the NPDES program, under EPA Administered Permit Programs: the NPDES, at 40 C.F.R. § 122, as amended.

9. Pursuant to the NPDES regulations at 40 C.F.R. § 122.5(b), the NPDES program requires permits for the discharge of any pollutant from any point source into waters of the United States.

10. Pursuant to the NPDES regulations at 40 C.F.R. § 423.15, an operator of a steam electric power plant is required to comply with the effluent limitations developed for the steam electric point source category.

11. Pursuant to the NPDES regulations at 40 C.F.R. §§ 122.26(a)(1)(ii) and 122.26(b)(14), operators are required to obtain a NPDES permit for storm water discharges associated with industrial activity.

12. The CWA and its implementing NPDES regulations, as well as the applicable NPDES permits contain the following definitions:

    a. "Best Management Practices" or "BMPs" mean schedules of activities, prohibitions of practices, maintenance procedures, and other management practices to prevent or reduce the pollution of "waters of the United States." BMPs also include treatment requirements, operating procedures, and practices to control plant site runoff, spillage or leaks, sludge or waste disposal, or drainage from raw material storage, pursuant 40 C.F.R. § 122.2;

    b. "Bi-Monthly" means every two (2) months;

    c. "discharge of a pollutant" means any addition of any pollutant to navigable waters and/or waters of the United States from any point source. Section 502(12) of the CWA, 33 U.S.C. § 1362(12), and 40 C.F.R. § 122.2;

d. "facility" means any NPDES point source or any other facility or activity (including land or appurtenances thereto) that is subject to the regulations of the NPDES program. 40 C.F.R. § 122.2;

e. "navigable waters" means the waters of the United States, including the territorial seas. Section 502(7) of the CWA, 33 U.S.C. § 1362(7); "Waters of the United States" means all waters such as lakes, rivers, streams (including intermittent streams), mudflats, sandflats, wetlands, among others, and their tributaries. 40 C.F.R. § 122.2;

f. "industrial activity" means the 11 categories of industrial activities included in the definition of "storm water discharges associated with industrial activity" as defined in 40 C.F.R. §§ 122.26(b)(14)(i)-(xi);

g. "non-structural BMP" means best management practices that generally consist of processes, prohibitions, procedures, and schedules of activities that prevent pollutants associated with industrial activity from contacting with storm water discharges and authorized non-storm water discharges. They are considered low technology, cost-effective measures, and do not involve construction and installation, and usually work by changing behavior, persuasion and/or economic instruments;

h. "owner" or "operator" means the owner or operator of any facility or activity subject to regulation under the NPDES program. 40 C.F.R. § 122.2;

i. "operator" means any entity with a storm water discharge associated with industrial activity that meets either of the following two criteria as defined in Appendix A of the 2008 NPDES Multi-Sector General Permit for Storm Water Discharges Associated with Industrial Activity:

   1) the entity has operational control over industrial activities, including the ability to modify those activities; or

   2) the entity has day-to-day operational control of activities at a facility necessary to ensure compliance with the permit (e.g., the entity is authorized to direct workers at a facility to carry out activities required by the permit);

j. "person" means an individual, corporation, partnership or association. Section 502(5) of the CWA, 33 U.S.C. § 1362(5), and 40 C.F.R. § 122.2;

k. "point source" means any discernible, confined and discrete conveyance, including but not limited to any pipe, ditch, channel, tunnel, conduit, well, discrete fissure, container, rolling stock, concentrated animal feeding operation, or vessel or other floating craft, from which pollutants are or may

be discharged. Section 502(14) of the CWA, 33 U.S.C. § 1362(14), and 40 C.F.R. § 122.2;

l. "pollutant" includes solid waste, dredged spoil, rock, sand, cellar dirt, sewage, sewage sludge and industrial, municipal and agricultural waste discharged into water. Section 502(6) of the CWA, 33 U.S.C. § 1362(6), and 40 C.F.R. § 122.2;

m. "Standard Operating Procedure(s)" or "SOP(s)" means the established or prescribed method(s) prepared by Respondent to be followed routinely for the performance of designated environmental compliance activities, operations, or in designated situations;

n. "storm water associated with industrial activity" means the discharge from any conveyance which is used for collecting and conveying storm water and which is directly related to manufacturing, processing or raw materials storage areas at an industrial plant. 40 C.F.R. §§ 122.2 and 122.26(b)(14);

o. "structural BMP" means the fixed, permanent physical structures and equipment requiring planning, design construction and maintenance that are designed to remove pollutants from storm water runoff, reduce downstream erosion, provide flood control and promote groundwater recharge; and

p. "Substantial Completion" means, when used in reference to Structural BMPs and construction projects required under this Order, the date, as certified by a Licensed Engineer in charge of a construction project who is authorized to conduct the engineering profession in the Commonwealth of Puerto Rico, when the Structural BMP or construction project or specified part thereof is sufficiently completed in accordance with the design drawings and specifications, such that the project or specified part thereof can be used to accomplish the purposes for which it was intended.

13. On September 29, 2008, EPA re-issued the NPDES Multi-Sector General Permit for Storm Water Discharges Associated with Industrial Activity (MSGP). The MSGP became effective on September 29, 2008, and expired on September 29, 2013. Pursuant to 5 U.S.C. § 558(c) and 40 C.F.R. § 122.6(a), coverage under the MSGP was administratively extended for those operators who obtained coverage under the MSGP prior to its expiration date (September 29, 2013).

14. The MSGP established Notice of Intent (NOI) requirements, development and implementation of Storm Water Pollution Prevention Plans (SWPPP), inspections, monitoring, reporting, recordkeeping and other special and general conditions.

15. The MSGP requires a facility operator who seeks coverage under the MSGP to submit a complete NOI form in order to obtain authorization to discharge storm water associated with industrial activity.

16. The MSGP requires the selection, design, and construction/implementation of control measures, such as non-structural and structural BMPs, to meet the non-numeric effluent limits contained in the MSGP (Section 2.1). The selection, design, installation, and implementation of the control measures must be in accordance with good engineering practices and manufacturer's specifications.

17. Part 2.1.2.1 (Minimize Exposure) of the MSGP requires the operator to minimize the exposure of material storage areas (i.e., loading and unloading, storage) to rain and runoff by either locating these industrial materials and activities inside or protecting them with storm resistant coverings. The MSGP does not recommend significant enlargement of impervious surface areas.

18. Part 2.1.2.2 (Good Housekeeping) of the MSGP requires the operator to keep clean all exposed areas that are potential sources of pollutants, using such measures as sweeping at regular intervals.

19. Part 2.1.2.3 (Maintenance) of the MSGP requires the operator to regularly maintain and repair systems to avoid situations that may result in releases of pollutants in stormwater discharged to receiving waters.

20. Part 2.1.2.5 (Erosion and Sediment Controls) of the MSGP requires the operator to stabilize exposed areas and contain runoff using structural and/or non-structural BMPs to minimize on-site erosion and sedimentation, and the resulting discharge of pollutants. Place flow velocity dissipation devices at discharge locations and within outfall channels where necessary to reduce erosion and/or settle out pollutants.

21. Part 2.1.2.6 (Management of Runoff) of the MSGP requires the operator to divert, infiltrate, reuse, contain, or otherwise reduce storm water runoff, to minimize pollutants in the discharges.

22. Part 2.1.2.12 (Dust Generation & Vehicle Tracking of Industrial Materials) of the MSGP requires the operator to minimize generation of dust and off-site tracking of raw, final, or waste materials.

23. Part 3.2 (Conditions Requiring Review to Determine if Modifications Are Necessary) of the MSGP requires the operator to review the selection, design, installation, and implementation of control measures to determine if modifications are necessary to meet the effluent limits in the MSGP when the average of four (4) quarterly sampling results exceeds an applicable benchmark.

24. Part 7.1 (Reporting Monitoring Data to EPA) of the MSGP requires the operator to submit all monitoring data collected pursuant to Parts 6.2 and 6.3 of the MSGP to EPA using EPA's online eNOI system (www.epa.gov/npdes/eNOI) no later than thirty (30) days (email date or postmark date) after the operator has received the complete laboratory results for all monitored outfalls for the reporting period. If the operator cannot access eNOI, paper reporting forms must be submitted by the same deadline in accordance with Part 7.6.1 of the MSGP.

25. Part 8.O.4.1 (Fugitive Dust Emissions) of the MSGP requires the operator to minimize fugitive dust emissions from coal handling areas.

26. Part 8.O.4.11 (Ash Loading Areas) of the MSGP requires the operator to reduce or control the tracking of ash and residue from ash loading areas, and to clear the ash building floor and immediately adjacent roadways of spillage, debris, and excess water before departure of each loaded vehicle.

27. Part 8.O.4.12 (Areas Adjacent to Disposal Ponds) of the MSGP requires the operator to minimize contamination of surface runoff from areas adjacent to disposal ponds, reduce ash residue that may be tracked on to access roads traveled by residue handling vehicles, and reduce ash residue on exit roads leading into and out of residue handling areas.

28. Part B.1 (Duty to Comply) of the MSGP requires the operator to comply with all conditions of the MSGP. Any permit noncompliance constitutes a violation of the CWA and is grounds for enforcement action; for permit termination, revocation and reissuance, or modification; or for denial of a permit renewal application.

29. Part B.4 (Duty to Mitigate) of the MSGP requires the operator to take all reasonable steps to minimize or prevent any discharge in violation of this permit which has a reasonable likelihood of adversely affecting human health or the environment.

30. Section 308(a)(A) of the CWA provides that "[w]henever required to carry out the objective of . . . [CWA Section 402] the Administrator shall require the owner or operator of any point source to (i) establish and maintain such records, (ii) make such reports, (iii) install, use, and maintain such monitoring equipment or methods (including where appropriate, biological monitoring methods), (iv) sample such effluents (in accordance with such methods, at such locations, at such intervals, and in such manner as the Administrator shall prescribe), and (v) provide such other information as [the Administrator] may reasonably require."

31. Section 309(a)(3) of the CWA provides that "[w]henever on the basis of any information available . . . the Administrator finds that any person is in violation of [CWA Sections 301 and 308], or is in violation of any permit condition or limitation implementing any of such sections in a permit issued under [Section 402 of the Act, the Administrator] shall issue an order requiring such person to comply with such section...."

32. Section 309(a)(5)(A) of the CWA provides that "[a]ny order issued under [CWA Section 309] shall state with reasonable specificity the nature of the violation, and shall specify a time for compliance . . . taking into account the seriousness of the violation and any good faith efforts to comply with applicable requirements."

33. EPA is the agency within the Commonwealth of Puerto Rico with authority to administer the federal NPDES program. EPA maintains enforcement authority for violations of the CWA and its implementing regulations.

III. JURISDICTIONAL FINDINGS

EPA makes the following findings of fact:

34. AES Puerto Rico, L.P. (Respondent) is a corporation organized under the laws of the State of Delaware, United States of America. Respondent is registered with the Puerto Rico Department of State under registration number 11062.

35. Respondent is the owner and operator, as defined at 40 CFR §122.2, of a coal-fired steam power plant and a marine cargo handling dock facility (hereinafter jointly referred as the "Facility") located at Road PR-3, Km. 142, Jobos Ward, Guayama, Puerto Rico 00784.

36. The operations at the coal-fired steam power plant are best described by the Standard Industrial Classification (SIC) Code 4911. This classification covers establishments primarily engaged in the generation, transmission, and/or distribution of electricity or gas or steam.

37. The operations at the marine cargo handling dock facilities are best described by SIC Code 4491. This classification includes docks, piers, terminals, staging areas, or in-transit areas, in which cargo loading or unloading operations take place.

38. 40 C.F.R. § 122.26(b)(14)(vii) addresses those facilities identified with SIC Code 4911.

39. 40 C.F.R. § 122.26(b)(14)(viii) addresses those facilities identified with SIC Code 4491.

40. Respondent's operations at the Facility are classified as "industrial activity" as defined in 40 C.F.R. §§ 122.26(b)(14)(vii) and (viii).

41. Respondent is a "person" pursuant to Section 502(5) of the CWA, 33 U.S.C. § 1362(5).

42. Respondent's Facility is a "point source" pursuant to Section 502(14) of the CWA, 33 U.S.C. § 1362(14).

43. Respondent "discharges pollutants" from the coal-fired steam power plant into wetlands immediately adjacent to Las Mareas Bay.

44. Respondent "discharges pollutants" from the marine cargo handling dock facility into Las Mareas Bay.

45. The wetlands adjacent to Las Mareas Bay are waters of the United States within the meaning of Section 502(7) of the CWA, 33 U.S.C. § 1362(7).

46. Las Mareas Bay is a navigable water of the United States within the meaning of Section 502(7) of the CWA, 33 U.S.C. § 1362(7).

47. Respondent is subject to the provisions of the CWA, 33 U.S.C. § 1251, *et seq.*, and the applicable NPDES permit application regulations found at 40 C.F.R. Part 122. Respondent was required to apply for and obtain NPDES permit coverage for the Facility's discharges of pollutants into waters of the United States pursuant to Section 402(p) of the CWA, 33 U.S.C. § 1342(p).

IV. FINDINGS OF FACTS

EPA makes the following findings of fact:

48. Respondent began operations at the Facility on or about November 2002.

49. On July 20, 2011 and July 26, 2011, an EPA Region 2 enforcement officer conducted a Compliance Evaluation Inspection (CEI) of the Facility. The purpose of the Inspection was to determine Respondent's compliance with the CWA, the NPDES regulations, and the MSGP. The findings of the CEI were summarized in the NPDES Water Compliance Inspection Report (CEI Report), dated October 3, 2011.

50. Based on the findings of the CEI and further investigations, EPA found Respondent to be in violation of the CWA and the applicable NPDES regulations for its discharges of pollutants into waters of the United States without NPDES permit coverage, and for its failure to apply for a NPDES permit.

51. On December 16, 2011, EPA issued to Respondent an Administrative Compliance Order (ACO), Docket Number CWA-02-2012-3100, in an effort to bring Respondent into compliance with the CWA and its implementing NPDES regulations.

52. The ACO included twenty eight (28) Ordered Provisions, including compliance dates. Respondent has submitted to EPA nineteen (19) Bi-Monthly Status Reports between December 22, 2011 and January 28, 2015. Respondent reported and provided documentation of the actions taken for the required period, including photo-documentation and compliance cost.

53. By letter dated May 5, 2013, EPA approved the structural BMPs matrix and schedule included in Respondent's ninth Bi-Monthly Status Report, dated May 15, 2013, in accordance with Provision 7 of the ACO.

54. On August 29, 2013, Respondent filed a modification to the NOI form to seek coverage under the MSGP for the storm water discharges associated with industrial activity from the Facility and the marine cargo handling dock into waters of the United States. Respondent obtained MSGP coverage beginning on September 29, 2013.

55. Based on an EPA Region 2 enforcement officer's review of the eleventh and twelve Bi-Monthly Status Reports, dated September 30, 2013 and November 21, 2013, respectively, Respondent notified EPA of its completion of the construction of the structural BMPs, the removal of construction BMPs, and the clean-up of construction areas, including the contractor compound areas, at the Facility. Also, Respondent notified EPA that it had not completed the cleaning/maintenance of the coal pile runoff pond.

56. On June 19, 2014, two (2) EPA Region 2 enforcement officers conducted an Enforcement Case Support Inspection (ECSI) of the Facility. The purpose of the ECSI was to determine Respondent's compliance with the ACO and the MSGP.

57. The findings of the ECSI were summarized in the NPDES Water Compliance Inspection Report (ECSI Report), dated August 26, 2014. Respondent received a copy of the ECSI Report on December 2, 2014.

58. On January 28, 2015, Respondent provided written notice to EPA that it had completed the cleaning/maintenance of the coal pile runoff pond, implemented non-structural and structural BMPs, completed the preparation of the SWPPP, and conducted other activities to address the findings of the ECSI Report and the AOC's pending actions.

59. Based upon an EPA Region 2 enforcement officer walkthrough of the Facility on January 28, 2015, and further review of Respondent's submittals, EPA found Respondent to be in non-compliance with the MSGP and ACO, as set forth below:

    a. failure to provide a Final Progress Report indicating and documenting the implementation of the non-structural BMPs and structural BMPs at the Facility, per the EPA May 5th, 2013 letter;

    b. Part 2.1.2.5 (Erosion and Sediment Controls) – lack of soil stabilization in areas near the coal pile, limestone dome, and coal pile runoff pond;

    c. Part 2.1.2.5 (Erosion and Sediment Controls) – lack of installation and/or replacement of the silt fence in the perimeter of the coal storage piles and coal handling areas;

d. Part 2.1.2.12 (Dust Generation & Vehicle Tracking of Industrial Materials) – lack of a dust and fugitive emissions control plan for areas in which ashes are handled (*e.g.*, Agremax™ storage pile);

e. Part 3.2 (Conditions Requiring Review to Determine if Modifications Are Necessary) – did not address the exceedances of the applicable benchmarks (e.g., aluminum and iron) for the period up to June 2014 concerning storm water discharges through outfalls 001 and 002;

f. failure to prepare and submit the comprehensive site inspection reports pursuant to Part 4.3.2 of the MSGP for the December 13, 2012 and December 19, 2013 comprehensive site inspections; and

g. Part 7.1 (Reporting Monitoring Data to EPA) – failure to submit MSGP discharge monitoring report forms (MDMR forms) all monitoring data collected since Respondent obtained MSGP coverage on September 29, 2013.

V. CONCLUSIONS OF LAW

EPA concludes:

60. As described in Paragraphs 48-58 above, EPA finds Respondent in violation of certain requirements of the MSGP, which require implementation of measures to bring the Facility into compliance with the CWA.

61. Respondent's non-compliance is subject to an enforcement action pursuant to Section 309 of the CWA, 33 U.S.C. § 1319.

VI. CONSENT

62. Respondent and EPA have negotiated this Order in good faith, which Order is fair, reasonable, and consistent with the goals of the CWA.

63. Respondent neither admits nor denies the factual allegations contained herein. Without admitting liability for the violations asserted in this Order or the factual allegations set forth therein, Respondent admits that EPA has the jurisdiction and authority under Section 309(a) of the CWA to issue this Order and agrees to be bound by this Order.

64. The Ordered Provisions (Part VII) of this Order shall be binding upon Respondent, its officers, directors, agents, servants, authorized representatives and successors and assigns.

VII. ORDERED PROVISIONS

In consideration of the above Statutory and Regulatory Authorities, Jurisdictional Findings, and Findings of Fact, and pursuant to the authority in Section 309 of the CWA, 33 U.S.C. § 1319, EPA has determined that compliance with the following requirements is reasonable, and Respondent so agrees. The Ordered Provisions contained in the ACO, Docket Number CWA-02-2012-3100, are superseded by the Ordered Provisions contained hereinafter.

EPA HEREBY ORDERS AND RESPONDENT HEREBY CONSENTS THAT:

65. **Except as otherwise indicated in this Order**, at all times Respondent shall comply with the CWA, its NPDES implementing regulations, the MSGP, and any NPDES permit Respondent subsequently applies for and obtains.

66. **Within thirty (30) calendar days of the Effective Date of this Order**, Respondent shall complete and submit the MDMR forms for the benchmark monitoring conducted pursuant to the requirements of the ACO and MSGP.

67. **Within thirty (60) calendar days of the Effective Date of this Order**, Respondent shall prepare, for EPA review and approval, a storm water sampling SOP (SW Sampling SOP) to conduct, document and submit storm water sampling data reports according to the quarterly visual assessment of storm water discharges and benchmark monitoring requirements in the MSGP. Respondent shall begin implementing the SW Sampling SOP upon its submission to EPA for review and approval. Any changes required to the SW Sampling SOP by EPA shall be made by Respondent within thirty (30) calendar days of EPA's request and be fully implemented at that time.

    The SW Sampling SOP shall at a minimum:

    a. establish procedures for the collection, analysis, documentation, recordkeeping, and reporting of storm water discharges;

    b. include, as an appendix, a flow chart describing the key features of the SW Sampling SOP that are relevant to conducting quarterly visual assessments and benchmark monitoring at each permanent sampling point;

    c. feature a map depicting all permanent sampling locations;

    d. describe the use and management of rain gauge data pursuant to the Rain Gauge SOP, which was developed by Respondent pursuant to the ACO;

    e. describe the sampling equipment, preservation of samples, approved laboratory methods, and the use and completion of a Chain of Custody Record (referred herein as "CCR") according to the MSGP; and

ED_006328A_00019662-00013

f. include hands-on and room training for the Pollution Prevention Team members, qualified personnel, and any other employees and contractors responsible for supervision and performance of storm water sampling.

68. **Upon the Effective Date of this Order and for a period of one year**, Respondent shall conduct benchmark monitoring and analyze samples according to Part 6.1.3 (measurable storm event), Part 6.1.4 (sample type), Part 6.1.5 (adverse weather condition), Part 6.1.7 (monitoring periods), Part 6.2.1.1 (applicability of benchmark monitoring), Part 6.2.1.2 (benchmark monitoring schedule), Part 8.O.7 (sector-specific benchmark for steam electric power generating facilities) and Part 8.Q.6 (sector-specific for water transportation) of the MSGP. Also, Respondent shall:

a. monitor at least once at the permanent sampling points 001, 002, and 003 (SP-001, SP-002, and SP-003, respectively) in each of the following 3-month intervals: January 1 – March 31; April 1 – June 30; July 1 – September 30; and October 1 – December 31;

b. analyze the samples for total aluminum, total iron, total lead and total zinc;

c. document monitoring activities and laboratory reports for each sampling point; and

d. prepare MDMR forms within thirty (30) days of receiving the laboratory results. Respondent shall use the MDMR available at the EPA's web site at http://water.epa.gov/polwaste/npdes/stormwater/.

69. **Until Termination of this Order**, Respondent shall prepare and submit MDMR referred to in Paragraph 67 above, in accordance with the schedules established therein.

70. **Within thirty (30) calendar days of the Effective Date of this Order**, Respondent shall submit a detailed report concerning the implementation of each of the action items included in the BMPs Matrix table and schedule, which EPA approved in its May 5, 2013 letter. Respondent shall supplement this information with documentation, which shall include at a minimum, photo-documentation and an updated BMPs Matrix table.

71. **Within thirty (30) calendar days of the Effective Date of this Order**, Respondent shall prepare and submit the comprehensive site inspection reports pursuant to Part 4.3.2 of the MSGP for the December 13, 2012 and December 19, 2013 comprehensive site inspections.

72. **Within sixty days (90) calendar days of the Effective Date of this Order**, Respondent shall prepare and submit a detailed Plan of Action (POA), for EPA review and approval, and subsequent implementation by Respondent, which shall include at a minimum:

a. a review and revision of the selection, design, installation, and implementation of Respondent's control measures in accordance with Part 3 of the MSGP;

b. a description of each action to be taken to comply with Part 3.2 (Conditions Requiring Review to Determine if Modifications Are Necessary) and Part 6.2.1.2 (Benchmark Monitoring Schedule) of the MSGP, which requires Respondent to review the selection, design, installation, and implementation of control measures to determine if modifications are necessary to meet the effluent limits in the MSGP. Specifically, Respondent shall perform this review for aluminum and iron; and

c. a plan for the minimization and control of dust (including fugitive dust) from coal combustion residuals and/or Agremax™ at the Facility and during transport (hereinafter, the "Dust Control Plan"). The Dust Control Plan shall include site management procedures such as wetting the Agremax™ storage pile at the Facility to ensure compliance with applicable MSGP requirements relating to dust control, and an implementation schedule.

73. **Respondent's POA, and its amendments thereto**, shall be signed and certified by a licensed engineer who is authorized to conduct the engineering profession in the Commonwealth of Puerto Rico. This licensed engineer shall have demonstrated expertise in design and implementation of fugitive dust minimization and controls; engineering practices for soil stabilization practices, storm water management, and pollution prevention.

74. **Within thirty (30) days or by such other deadline approved by EPA,** Respondent shall modify the POA to address EPA's comments. Respondent shall, upon approval by EPA, implement the POA. Defendants shall proceed to take any actions required by the approved POA, in accordance to the schedule contained therein, as approved in writing by EPA.

75. **No later than sixty (60) days after the Effective Date of this Order,** Respondent shall create, in addition to the existing Environmental Coordinator Position, a Storm Water Compliance Coordinator (Coordinator) position at the Facility. The Coordinator shall be:

a. an employee of Respondent who has the education, experience and skills to manage compliance with storm water management requirements including the control measures and BMPs at the Facility, with the authority to direct Respondent's employees in connection with storm water compliance activities;

b. responsible for: (i) overseeing the preparation, amendment, and certification of the SWPPP; (ii) providing and/or coordinating applicable environmental training to the Facility's personnel; (iii) conducting quarterly

and routine inspections; (iv) assisting employees and/or contractors with the installation, maintenance and improvement of non-structural and structural BMPs; (v) conducting comprehensive site inspections; (vi) determining if appropriate actions have been timely made to address compliance violations or to make improvements to BMPs; (vii) coordinating the pick-up and analysis of storm water samples; (viii) monitoring compliance with this Order; and (ix) preparing and submitting Reports to EPA; and

c. an advisor to Respondent's officers with respect to compliance with the MSGP and this Order.

76. **No later than sixty (60) days after the Effective Date of this Order**, Respondent shall submit a certification stating that Respondent created the position of, and hired, the Coordinator referenced in Paragraph 75, above.

77. **Until Termination of this Order**, Respondent shall prepare and submit Quarterly Progress Reports (QPR) that describe the current status and progress of Respondent's actions taken to comply with the provisions of this Order. Respondent shall:

a. submit each QPR to EPA no later than the fifteenth (15th) day of the month following the month that is the subject of the report; and

b. indicate in the QPR, at a minimum, the following:

1) the specific activities undertaken by Respondent relating to the completion of work required under this Order, including, but not limited to, the expected date for the Substantial Completion, and identification of those requirements which have been accomplished since the previous QPR, including the dates of Substantial Completion of any of the remedial actions, capital improvements, or any other actions identified in this Order;

2) any impediments Respondent encountered in meeting the compliance schedules, the steps that Respondent has taken to overcome such impediments, and the steps that Respondent will take to overcome such impediments, including the anticipated dates by which such steps will be taken; and

3) a cost report detailing the expenses incurred as of the date of the QPR.

If Respondent has already submitted a deliverable to EPA, Respondent shall reference that deliverable in the QPR and its date of submission, instead of submitting another copy of that deliverable to EPA.

VIII. GENERAL PROVISIONS

78. Any questions concerning this Order should be directed to José A. Rivera, Senior Environmental Engineer, Multimedia Permits and Compliance Branch, Caribbean Environmental Protection Division, at (787) 977-5842 / rivera.jose@epa.gov.

79. Any documents to be submitted by Respondent as part of this Order shall be sent by certified mail or its equivalent, and shall be signed by an authorized representative of the respective entity (see 40 C.F.R. § 122.22), and shall include the following certification:

> "I certify under penalty of law that this document and all attachments were prepared under my direction or supervision in accordance with a system designed to assure that qualified personnel properly gathered and evaluated the information submitted. Based on my inquiry of the person or persons who manage the system, or those persons directly responsible for gathering the information, the information submitted is, to the best of my knowledge and belief, true, accurate, and complete. I am aware that there are significant penalties for submitting false information, including the possibility of fine and imprisonment for knowing violations."

80. All documents required to be submitted under this Order shall be sent to the following addresses:

Director, Water Quality Area
Environmental Quality Board
P. O. Box 11488
San Juan, Puerto Rico 00910,

and

Chief, Multimedia Permits and Compliance Branch
Caribbean Environmental Protection Division
U.S. Environmental Protection Agency, Region 2
City View Plaza II, Suite 7000
48 RD. 165 Km. 1.2
Guaynabo, Puerto Rico 00968-8069.

81. Respondent waives any and all claims for relief and otherwise available rights to administrative or judicial review of any issue of law or fact, or any other provision, set forth in this Order, including, but not limited to, any right of judicial review of this Order under the Administrative Procedure Act, 5 U.S.C. §§ 701-708.

82. Notwithstanding any other provision of this Order, Respondent reserves its rights to contest liability in any subsequent action filed by EPA to seek penalties for a

violation of this Order, and reserves its rights to contest liability in any subsequent action for any violations EPA has alleged in this Order. Respondent reserves all defenses to any action asserted or taken by EPA under its reservations in this Order or otherwise.

83. This Order does not constitute a waiver from compliance with, or a modification of, the effective terms and conditions of the CWA, its implementing regulations, or any applicable permit, which remain in full force and effect. This Order is an enforcement action taken by EPA to ensure swift compliance with the CWA. Issuance of this Order shall not be deemed an election by EPA to forego any civil or criminal actions for penalties, fines, imprisonment, or other appropriate relief under the CWA.

84. Notice is hereby given that should EPA commence an action in a United States District Court for a violation of any Ordered Provision of this Order, Respondent may be subject to: (1) civil penalties up to $37,500 per day for each day of violation, pursuant to Section 309(d) of the CWA, 33 U.S.C. § 1319(d); and/or (2) injunctive relief, pursuant to Section 309(b) of the CWA, 33 U.S.C. § 1319(b), as imposed by the Court.

85. If any provision of this Order is held by a court of competent jurisdiction to be invalid, any surviving provisions shall remain in full force and effect.

IX. DELAY OF PERFORMANCE/FORCE MAJEURE

86. "Force Majeure," for purposes of this Order, is any event entirely beyond the control of Respondent or any entity controlled by Respondent that delays or prevents performance of any obligation under this AOC, notwithstanding Respondent's best efforts to avoid the delay. The best efforts requirement includes using best efforts to anticipate any such event and to minimize the delay caused by any such event to the greatest extent practicable. Examples of events that are not force majeure events include, but are not limited to, increased costs or expenses of any work to be performed under this AOC, Respondent's financial or business difficulties, and normal inclement weather.

87. Unless otherwise specified, if any event may occur or has occurred that may delay the performance of any obligation under this Order, whether or not caused by a force majeure, Respondent shall notify by telephone the EPA contact identified in Paragraph 78 of this Order, or, in his absence, the Multimedia Permits and Compliance Branch Chief identified in Paragraph 79, Caribbean Environmental Protection Division, EPA, Region 2, within four (4) business days of when Respondent knew or reasonably should have known that the event might cause a delay. Within fifteen (15) calendar days thereafter, Respondent shall provide in writing the reasons for the delay, the anticipated duration of the delay, the measures taken or to be taken to prevent or minimize the delay, and a timetable by which those measures will be implemented. Respondent shall exercise its best

efforts to avoid or minimize any delay and any effects of a delay. Failure to comply with the notice requirement of this paragraph shall preclude Respondent from asserting any claim of force majeure.

88. If EPA agrees that an actual or anticipated delay is attributable to force majeure, the time for performance of the obligation shall be extended by written agreement of the parties. An extension of the time for performing an obligation directly affected by the force majeure event shall not, of itself, extend the time for performing a subsequent obligation. The time of performance of any subsequent obligation that is directly impacted by an extension of time granted for an obligation due to a force majeure event shall be extended at the request of the Respondent. EPA will review Respondent's request and will provide a new set of compliance date(s) in writing, if deemed necessary.

89. Respondent shall have the burden of demonstrating, by a preponderance of the evidence, that the actual or anticipated delay has been or will be caused by a force majeure event, that the duration of the delay was or will be warranted under the circumstances, that Respondent did exercise or is using its best efforts to avoid and mitigate the effects of the delay, and that Respondent complied with the requirements of this section.

X. TERMINATION AND SATISFACTION

90. After Respondent has complied with all the Ordered Provisions of this Order, Respondent may serve upon EPA a Request for Termination, stating that Respondent has satisfied those requirements, together with all necessary supporting documentation.

91. Following receipt by EPA of Respondent's Request for Termination, within thirty (30) calendar days or at another mutually agreed upon time, EPA and Respondent shall confer informally concerning the Request and any disagreement that EPA and Respondent may have as to whether Respondent has satisfactorily complied with the requirements for termination of this Order. If EPA agrees, it will close-out this Order by informing Respondent in writing of such decision. However, the determination to close-out this Order shall be solely in the discretion of EPA.

92. Any violation of this Order may be grounds for EPA to terminate this Order in its sole discretion.

XI. EFFECTIVE DATE AND EFFECT OF CONSENT

93. This Order shall become effective upon the date of execution by the undersigned Director, Caribbean Environmental Protection Division, Region 2, EPA.

94. Each undersigned signatory to this Order certifies that he is duly and fully authorized to enter into or ratify this Order and all of the applicable terms and conditions set forth herein.

95. Respondent and EPA shall bear their own costs of this Order, including attorneys' fees.

96. Respondent hereby consents to the issuance of this Order and agrees to be bound thereby.

97. Nothing in this Order limits Respondent's obligations to comply with the requirements of all applicable federal and Commonwealth of Puerto Rico laws and regulations.

FOR AES PUERTO RICO, L.P.:

_____ Dated: 3/18/15

MANUEL MATA
Plant Manager
AES PUERTO RICO, L.P.
P. O. Box 1890
Guayama, Puerto Rico 00785

FOR UNITED STATES ENVIRONMENTAL PROTECTION AGENCY, REGION 2:

_____ Dated: 3-18-15

JOSÉ C. FONT
Director
Caribbean Environmental Protection Division
Environmental Protection Agency, Region 2
City View Plaza II, Suite 7000
48 RD. 165 Km. 1.2
Guaynabo, Puerto Rico 00968-8069

Exhibit 4

From: **Laura Arroyo** <larroyo@earthjustice.org>
Date: Mon, Mar 22, 2021 at 6:22 PM
Subject: Comments and Request for Denial of Construction Permit and Revocation of AES Permits
To: <notificacion@ogpe.pr.gov>, <deca@ogpe.pr.gov>, <notificacion@ddec.pr.gov>
CC: <rstgo2@gmail.com>, <zuleta_m@ogpe.pr.gov>, <dejesus_j@ogpe.pr.gov>, <angel_s@ogpe.pr.gov>, <torres_s2@ogpe.pr.gov>, <ortiz_i@ogpe.pr.gov>

To whom may concern,

Please find attached the document titled "Comments and Request for Denial of Construction Permit and Revocation of AES Permits" on behalf of Comité Diálogo Ambiental for the following files under the Permit Management Office:
2020-304207-PCD-006243;
2020-304207-PCM-008653;
2020-304207-PCOC-013253;
2020-304207-DEA-004713;
2020-304207-REA-004834.

Thank you,

Laura Arroyo
Pronouns: she/her/hers/ella
Earthjustice
Until we reach 100% renewable energy in Puerto Rico

4500 Biscayne Blvd., Suite 201
Miami, FL 33137
t: 305.440.5436
f: 850.681.0020
earthjustice.org

facebook.com/earthjustice
twitter.com/earthjustice

EARTHJUSTICE

Because the earth needs a good lawyer

*The information contained in this email message may be privileged, confidential and protected from disclosure. If you are not the intended recipient, any dissemination, distribution or copying is strictly prohibited. If you think that you have received this email message in error, please notify the sender by reply email and delete the message and any attachments.

GOVERNMENT OF PUERTO RICO
DEPARTMENT OF ECONOMIC DEVELOPMENT AND COMMERCE
PERMITS MANAGEMENT OFFICE
OFICINA DE GERENCIA DE PERMISOS

IN RE: AES PUERTO RICO, L.P LINER CONSTRUCTION PROJECT	**CASE NO.:** 2020-304207-PCD-006243 (2021-SCE-013732); 2020-304207-PCM-008653; (2021-SCE-013731); 2020-304207-PCOC-013253 2020-304207-DEA-004713; 2020-304207-REA-004834

COMMENTS AND REQUEST FOR DENIAL OF CONSTRUCTION PERMIT AND REVOCATION OF AES PERMITS

TO THE PERMITS MANAGEMENT OFFICE:

COMES NOW, Comité Diálogo Ambiental, Inc., through the undersigned legal representation and submits comments and requests that the Permit Management Office deny the construction permit and revoke all permits and approvals for the AES Liner Construction Project.

INTRODUCTION

Comité Diálogo Ambiental, Inc., is a community environmental group composed of residents of the Municipality of Salinas and the Guayama Region, organized as a nonprofit corporation under the laws of the Commonwealth of Puerto Rico since 1997. The purposes of the organization are to promote the general welfare of the communities it serves through education and capacity building of residents concerning the adverse impacts of human activities on the ecologic balance of natural systems and the importance of restoring the environment and promoting conditions under which human beings and the environment can exist in harmony to fulfill economic, social, and other needs of present and future generations.

The AES Puerto Rico, L.P. ("AES") coal burning power plant in Guayama, Puerto Rico accumulates hundreds of thousands of tons of coal ash waste at its plant site. Evidence of environmental contamination by AES is documented in various groundwater monitoring reports prepared by AES's contractor, DNA Environmental, LLC as a requirement of the Federal Coal Combustion Residuals Rule ("CCR Rule"). The data from the DNA reports indicates that the groundwater in the downstream gradient wells of the coal combustion waste, called Agremax (especially the wells designated MW-3 and MW-4) is highly contaminated with coal ash waste

ED_006328A_00019663-00003

when compared to upstream wells (designated MW-1 and 2).[1] AES's polluting practices have already contaminated part of the South Coast Aquifer, the sole source of potable water for tens of thousands of people in Puerto Rico.

ARGUMENT

I. AES OBTAINED THE PERMITS FOR THE LINER CONSTRUCTION PROJECT BASED ON FRAUDULENT MISREPRESENTATIONS

As required by the CCR Rule, AES commissioned the Corrective Measures Assessment ("CMA") Report[2]. The Report attempts to present clean up alternatives for the aquifer contaminated with toxic AES coal ash, known as Agremax, that AES has accumulated in an immense pile for years and left in direct contact with the soil and exposed in the open at its plant in Guayama, Puerto Rico.

AES, has opted to excavate 4-6 feet of soil, replace it with clean fill material, install a liner and pipe storm water to a pond adjacent to the coal pile as the main components of the corrective measures. In furtherance of the corrective measures proposed, AES filed various documents with the Puerto Rico Permit Management Office ("PMO"), including an Environmental Assessment ("EA"). In the EA submitted by AES to obtain approvals and permits for the liner construction project, AES falsely alleges the AES-PR plant produces 454 Megawatts of energy[3]. In reality, AES currently has an installed capacity of 524 MW.[4] That is an extra 70 MW of generation capacity and the corresponding amount of additional coal ash waste than what AES reported to the Permit Management Office in its filings to the administrative agency.

Furthermore, the Environmental Assessment submitted by AES falsely alleges as follows:

> "The plant is classified as a zero liquid discharge process water plant. The AES-PR plant is considered zero discharge because it reuses its process waters and does not discharge process waters either to PRASA or to bodies of water."[5] (Translation provided)

Again, AES's allegations in the EA are false. In 2012, the Environmental Protection Agency ("EPA") imposed a fine of $170,000.00 against AES for discharging contaminants into the wetlands near the Guayama plant and for multiple violations of the Clean Water Act ("CWA"). The EPA issued an Administrative Compliance Order ("ACO") in Docket Number CWA-02-2012-3100 to address the years of illegal discharges by AES in violation of the CWA. Subsequently, and due to AES's continuous illegal discharges and violations of the CWA, EPA issued an Administrative Order on Consent with the following findings:

---

[1] https://aespuertorico.com/wp content/uploads/2020/02/190173_AES_2019_Groundwater_Monitoring_and_Corrective_Action_Report.pdf

[2] Corrective Measures Assessment ("CMA") Report, AES Puerto Rico - Agremax ™ Staging Area Guayama, Puerto Rico, https://aespuertorico.com/ccr/.

[3] EA, p.3

[4] Moción para Presentar Reporte de Estatus y Progreso Final y Solicitud de Relevo de Orden, p. 23, https://energia.pr.gov/wpcontent/uploads/sites/7/2021/02/Mocion-para-Presentar-Reporte-de-Estatus-y-ProgresoFinal-y-Solicitud-de-Relevo-de-Orden-NEPR-AP-2020-0001-1.pdf.

[5] EA, p.3

ED_006328A_00019663-00004

> Based on the findings of the CEI (NPDES Water Compliance Inspection Report (CEI Report), dated October 3, 2011) and further investigations, EPA found Respondent to be in violation of the CWA and the applicable NPDES regulations for its discharges of pollutants into waters of the United States without NPDES permit coverage and for its failure to apply for a NPDES permit. On December 16, 2011, EPA issued to Respondent (AES) an Administrative Compliance Order (ACO), Docket Number CWA-02-2012-3100, in an effort to bring Respondent into compliance with the CWA and its implementing NPDES regulations.[6]

In the 2015 Administrative Order on Consent Docket Number CWA-02-2015-3102, ("AOC"), EPA documents additional CWA violations by AES:

> Based upon an EPA Region 2 enforcement officer walkthrough of the Facility on January 28, 2015, and further review of Respondent's submittals, EPA found Respondent to be in non-compliance with the MSGP and ACO, as set forth below: a. failure to provide a Final Progress Report indicating and documenting the implementation of the non-structural BMPs and structural BMPs at the Facility, per the EPA May 5th, 2013 letter; b. Part 2.1.2.5 (Erosion and Sediment Controls) — lack of soil stabilization in areas near the coal pile, limestone dome, and coal pile runoff pond; c. Part 2.1.2.5 (Erosion and Sediment Controls) — lack of installation and/or replacement of the silt fence in the perimeter of the coal storage piles and coal handling areas; d. Part 2.1.2.12 (Dust Generation & Vehicle Tracking of Industrial Materials) — lack of a dust and fugitive emissions control plan for areas in which ashes are handled (e.g., AgremaxTm storage pile); e. Part 3.2 (Conditions Requiring Review to Determine if Modifications Are Necessary) — did not address the exceedances of the applicable benchmarks (e.g., aluminum and iron) for the period up to June 2014 concerning storm water discharges through outfalls 001 and 002; f. failure to prepare and submit the comprehensive site inspection reports pursuant to Part 4.3.2 of the MSGP for the December 13, 2012 and December 19, 2013 comprehensive site inspections; and g. Part 7.1 (Reporting Monitoring Data to EPA) — failure to submit MSGP discharge monitoring report forms (MDMR forms) all monitoring data collected since Respondent obtained MSGP coverage on September 29, 2013. [7]

Furthermore, EPA has documented AES violations to National Pollutant Discharge Elimination System ("NPDES") permit number PRR053093 since January 2018[8]. AES has failed to submit Discharge Monitoring Reports as required under the NPDES permit since at least January 2018. Additionally, AES has incurred in violations that include: "WW Storm Water Non-Construction - Discharge without a permit, WW Storm Water Non-Construction - Failure to Implement SWPPP/SWMP, WW Storm Water Non-Construction - Failure to properly install/implement BMPs, WW Storm Water Non-Construction - Failure to properly operate and maintain BMPs, and WW Storm Water Non-Construction - Failure to submit required report (non-DMR)"[9] since

---

[6] AES Puerto Rico, L.P. Administrative Order on Consent Docket Number CWA-02-2015-3102, ("AOC"), p. 8.
[7] AOC, pages 9-10.
[8] https://echo.epa.gov/detailed-facility-report?fid=110012141805#pane3110012141805.
[9] Id.

approximately November or December 2019. Therefore, it is clear that AES is not a "zero liquid discharge process water plant" and that AES knowingly submitted false information to the PMO both as to the water discharges and the generation capacity. Law 161-2009, as amended, presumes the accuracy of permits, but "when there is fraud, deceit, deception, extortion, bribery or the commission of any crime in granting or denying a final determination or permit, or in such cases in which the structure poses a risk to the health or safety, or to environmental or archaeological conditions, the final determination so issued and the permit granted by the Permit Management Office, by the Autonomous Municipality with I to V granted hierarchy or by the authorized professional, must be revoked[10]. All permits issued by PMO to AES should be revoked and pending permit applications should be denied.

II. AES'S PLAN DOES NOT MEET FEDERAL REQUIREMENTS AND LACKS PUBLIC HEALTH PROTECTION MEASURES

AES commissioned studies show that toxic CCR from its coal plant is polluting groundwater with lithium, selenium and molybdenum. The AES commissioned studies on groundwater quality conducted by DNA Environmental, confirmed that metals such as lithium, selenium and molybdenum have leached from AES coal ash waste pile into the aquifer, its toxic concentrations exceeding 4-11 times the safety levels.

The 2017 Annual Groundwater Monitoring Report for the AES Guayama plant site, required by the CCR Rule, indicates that the groundwater in downgradient wells, especially wells MW-3 and MW-4, is highly contaminated with coal ash pollutants. When compared with the upgradient wells (MW-1 and 2), the levels of coal ash contaminants in the downgradient wells are orders of magnitude higher, depending on the contaminant. The direction of groundwater flow is away from the coal ash waste pile and towards the sea and a coastal community visible from the satellite photograph in the Report. These elevated levels of pollutants indicate the AES coal ash waste pile is releasing hazardous chemicals to the groundwater, which are flowing offsite. These toxic metals cause neurological damage, gout, and liver and kidney disease in humans. In addition, selenium is highly toxic to fish and other aquatic species, and it bioaccumulates, meaning it can permanently destroy wildlife populations as it moves through the environment over a period of years.

An EPA study using the Leaching Environmental Assessment Framework ("LEAF") shows that aluminum, arsenic, boron, cadmium, chloride, chromium, fluoride, lead, lithium, molybdenum, selenium, sulfate, and thallium can leach from the AES coal ash waste at high levels and then contaminate the local environment around the sites at which coal ash has been disposed. [11]

Sample analyses commissioned by Earthjustice in July 2019 determined that the level of arsenic found in the coal ash deposited in Urb. Parque Gabriela and the Ranchos Guayama community, in Salinas, and the Dulces Sueños Connector, in Guayama, exceeds EPA standards and is considered harmful to human health --from 6 to 15 parts per million (ppm). These levels are 9 to 22 times

[10] Law 161-2009, as amended, Article 9.10, 23 L.P.R.A. § 9019i.

[11] A.C. Garrabrants, D.S. Kosson, R. DeLapp and Peter Kariher, Leaching Behavior of "AGREMAX" Collected from a Coal-Fired Power Plant in Puerto Rico, EPA 600/R-12/724 December 2012 | www.epa.gov/ord See also, Independent laboratory tests conducted by TestAmerica and background levels for these metals taken from ATSDR Study available at http://www.atsdr.cdc.gov/HAC/PHA/reports/isladevieques_02072003pr/tables.html#T2

ED_006328A_00019663-00006

higher than the level considered safe for arsenic in residential soils, and 2 to 5 times higher than the level considered safe for soil in industrial properties established by the EPA. These levels of contaminants raise questions regarding the status of all coal ash land fill sites in Puerto Rico where AES discharged its waste. These fills are not monitored; however, the same chemicals and dangerous metals can contaminate more groundwater.

The 2015 Coal Combustion Residuals Rule, mandates that companies that pollute groundwater above federal health standards must develop a strategy to prevent new emissions, ameliorate pollution, and restore the affected area to their original condition. 40 C.F.R. § 257.96 (a).

AES's selected remedy to allegedly comply with the CCR Rule-installation of a liner plus Monitored Natural Attenuation ("MNA") fails most of the criteria and objectives of the applicable regulation, 40 CFR 257.97(b) and (c) because it does not entail removal of the pollutants in the groundwater. This is cause for concern because the direction of the flow of groundwater is moving away from the AES pile of coal ash waste towards the coastal community and then to the bay.

AES's plan is flawed for several reasons. The plan does not meet CCR Rule requirements because of the deficiencies in the research commissioned by AES and the limitations of the proposed solutions. These are serious deficiencies and make the cleanup plan inadequate to remedy past and ongoing contamination of groundwater, air, and (potentially) surface waters with CCR from the AES plant. The law requires AES to submit a plan to the community that meets federal standards.

The measures proposed by AES do not prevent continued contamination from the CCR waste pile. The installation of a plastic liner to reduce future groundwater contamination, would provide, at best, only a temporary barrier to CCR contaminants. It does not meet the standards of federal law and would not be effective in the long run. The AES cleanup proposal will not stop ongoing contamination from CCRs. Contaminated runoff and toxic fugitive dust are not adequately addressed in the AES proposed measures.

AES does not propose long-term or truly effective solutions to avoid continuous toxic CCR contamination. AES's plan does not present an effective solution to prevent the continued spread of CCR via air, groundwater and/or surface runoff. Containment measures for CCR should include placement in secure storage silos with impermeable floors and walls, as well as engineering safeguards to contain CCR under severe wind and rain conditions in seismic-activity proof locations.

AES did not investigate or characterize the nature and extent of the spread of contaminants from the CCR waste pile using the Leaching Environmental Assessment Framework ("LEAF")[12], a battery of tests more suited to detecting the leaching potential of coal combustion residuals. The

[12] An EPA study using the Leaching Environmental Assessment Framework ("LEAF") shows that aluminum, arsenic, boron, cadmium, chloride, chromium, fluoride, lead, lithium, molybdenum, selenium, sulfate, and thallium can leach from the AES coal ash waste at high levels and then contaminate the local environment around the sites at which coal ash has been disposed. A.C. Garrabrants, D.S. Kosson, R. DeLapp and Peter Kariher, Leaching Behavior of "AGREMAX" Collected from a Coal-Fired Power Plant in Puerto Rico, EPA 600/R-12/724 December 2012 | www.epa.gov/ord.

ED_006328A_00019663-00007

Coal Combustion Residues Rule requires AES to characterize the nature and extent of CCR spread. 40 C.F.R. § 257.95 (g) (1) This is an essential first step to develop a cleanup plan.

The EA indicates that the project site is a flood prone area, with flood levels exceeding 3 meters. In addition, the EA documents the wetland area in the southwest area of the project site where AES proposes to continue to accumulate tens of thousands of tons of coal ash waste. Lithium variations above the drinking water detection level were detected in the extreme southwest of the property in the TW-C well, yet no explanation is provided for this data.[13]. Furthermore, AES failed to survey the large wetland area just south of the plant to determine if there were heavy metals from CCR contamination in its sediment, surface water, or its underlying groundwater. Contamination of the wetland areas is likely to negatively impact aquatic life, birds, and crustaceans. Since the area is a habitat for game birds caught for human consumption, this can have adverse impacts on both public health and the local economy. Furthermore, the EA does not address the impact of proposed excavation on the aquifer water table, wetlands, and a flood prone area.

AES did not investigate CCR contamination in discharge areas of Las Mareas Bay. Although AES admits that contaminated groundwater is discharged into the bay in the low tide zone[14], it did not sample the water near the port nor the sediments in the area. Instead, AES sampled much deeper waters in the bay.

AES cited an outdated survey on groundwater use in Las Mareas, a community neighboring the contaminated groundwater to the south. The survey used by AES dates back to 2002. To ensure that all households obtain water from a public drinking-water pipe or if there are existing private wells in the area, AES must carry out a new survey.

III. AES' PLAN WILL WORSEN FUGITIVE DUST POLLUTION

The AES coal ash waste pile grew to an accumulated amount of (at least) 487,000 tons of CCRs (2019), making it the largest CCR pile of any jurisdiction in the United States and its territories (about 40 times larger than that of Alaska containing 11,000 tons of ash). Fugitive dust from the CCR waste reaches nearby communities on a daily basis and contaminates the lungs of people who breathe the toxics contained in the ashes.

A July 2017 CCR Inspection Report for the AES coal ash waste pile at the AES plant site containing 430,000 tons of CCRs notes that, "localized rills were observed on the surface of stockpile slopes, they appeared to be related to over-watering by the water sprinkler . . . . The water truck was not operational at the time. Some fugitive dust caused by wind was observed on the west slope of the Stockpile at the time of inspection." Regarding the CCR pile, the Report describes that it had "increased to an estimated height of 120 feet," while its "slopes have become longer and steeper." (emphasis added).

---

[13] CMA, p.100-110, https://aespuertorico.com/ccr/

[14] Haley Aldrich, Corrective Action Evaluation Report, AES Puerto Rico - AGREMAX Concentration Area, Guayama, Puerto Rico, September 2019, amended on 8 November 2019, on page 130, https://aespuertorico.com/ccr/

ED_006328A_00019663-00008

AES's plan according to the EA and its engineering consultants, Winston Esteves and Steven Putrich (Haley Aldrich consultant), is to move half of the accumulated CCR on the Guayama site in order to place the first section of a plastic liner. The EA and the Report indicate that the liner placement would be done in two phases: phase 1 would consist of placing half of the CCR pile over the other half (located in an area identified for phase 2); the plastic liner would then be placed in the original phase 1 area, and finally the entire CCR pile accumulated in the phase 2 area would be placed over the liner located in the phase 1 area.[15]

The movement of the AES coal ash waste would inevitably create clouds of toxic ash particles and migrate to nearby and densely populated communities such as Miramar, Santa Ana, San Martín, Puerto de Jobos, Mosquito and San Felipe. Residents of these nearby communities have filed several complaints with the Department of Natural and Environmental Resources because of fugitive coal ash dust reaching their homes on normal days of operation of the plant. The correction measures that AES proposes would require excavation and moving tens of thousands of tons of coal ash waste and would inevitably mobilize more fugitive dust than during normal operations.

The Siting Location issued by the Puerto Rico Planning Board for the AES plant required AES to transport and dispose of the coal ash waste outside of Puerto Rico due to the anticipated serious health hazards associated with the heavy metals and constituents of concern.

In the permit application documents, AES does not address compliance with Puerto Rico Law 5-2020, known as "Law to Prohibit the Deposit and Disposal of Coal Ash or Coal Combustion Residues in Puerto Rico", which obliges the company to remove the ashes of its facilities within 180 days.

IV. AES HAS A LONG HISTORY OF NONCOMPLIANCE WITH ENVIRONMENTAL LAWS AND REGULATIONS

A letter from the EPA Region 2, Regional Administrator to the Puerto Rico Environmental Quality Board, dated November 11, 2011 indicates as follows:

> "We have inspected ten sites in the municipalities of Arroyo, Guayama, and Salinas, where Agremax has been placed on the land, including residential areas and areas close to wetlands and surface water. It is our observation, based on these inspections and subsequent investigation, that the land placement of Agremax may constitute disposal at several of the sites inspected. The volumes observed placed on the land in some cases appeared to far exceed those we would consider necessary for the appropriate engineering use of the construction material for which Agremax was allegedly being substituted. In addition, several of the Agremax land placement sites appeared to have been abandoned, in that, despite the presence of signs indicating construction permit issuance, the slated construction projects had not been initiated and no construction equipment or activity was noted, while several sites appeared overgrown and had been used for the illegal deposition of waste materials."

And further states as follows:

[15] Haley Report, p. 13 (section 4.3.1), https://aespuertorico.com/ccr/.

ED_006328A_00019663-00009

> "The locations at which some of the deposition of Agremax has taken place overlie shallow sole source drinking water aquifers, and are thus particularly sensitive to environmental harm. A 2007 EPA report documents known damage cases from the mismanagement of coal ash in unlined landfills and surface impoundments and the subsequent contamination of drinking water aquifers through the leaching and ground water transport of contaminants in the ash. Two EPA Orders, issued in 2003 and 2004 under the Comprehensive Environmental Response, Compensation, and Liability Act, and a subsequent 2004 citizen suit taken under Section 7002 of the Resource Conservation and Recovery Act, address aquifer contamination by the leaching of toxic constituents from an unlined coal ash landfill in Pines, Indiana. The EPA proposed rule states that: ". . .EPA recognizes that seven proven damage cases involving the large scale placement, akin to disposal, of [coal combustion residues] has occurred under the guise of "beneficial use". . ." and that ". . .therefore, today's proposed rule explicitly removes these types of uses from the category of beneficial use.. ." (75 F.R. 35 161). Id." (emphasis added).

As an example of one of the disposal locations identified, an EPA inspector found that an access road adjacent to Pfizer Guayama plant is "far more extensive (wider, higher) than appropriate for stated end use." Field Notes taken by L Grossman of EPA.

As noted above, AES has repeatedly violated the Clean Water Act. AES has also repeatedly failed to comply with the orders of the Environmental Quality Board, now Department of Natural and Environmental Resources ("EQB/DNER") (Ref. Nos. 17-14 and 17-21)[16], which obliged AES to cover the CCR waste pile at its facilities before the passage of hurricanes Irma and María to avoid fugitive dust and to safeguard the health and safety of the residents of the areas surrounding the plant. Prior to Hurricane Irma, EQB/DRNA ordered AES to contain and cover the coal combustion residuals and/or Agremax at its facilities to safeguard the health and safety of the residents (Resolution No. 17-14). AES refused to comply with the order and was fined $95,000.00. AES failed to comply with a second order issued by EQB, with the same requirements, as Hurricane Maria approached.

The Toxic Release Inventory ("TRI") published by the EPA reveals that the AES coal-fired plant is the largest polluting plant in Puerto Rico. According to TRI, since AES began operations, it has emitted 8,560,412.19 pounds of toxic substances and 63% of that pollution has been released into the air. Among the toxic substances released by AES daily into the air are arsenic, mercury, ammonia, barium, chromium, vanadium, and sulfuric acid.

EPA has also documented one informal enforcement action in the past 5 years, a Clean Air Act ("CAA") notice of violation dated 8/28/2020.[17]

---

[16] Puerto Rico Environmental Quality Board 96-9-1, 96-39-1, available at http://www.ac,remax.com/Downloads/R-00-96-2%20ENGLISH.pdf, and 00-14-2 available at http://www.agremax.com/Downloads/R-00-14-2%20ENGLISH.pdf R. 96-39-1 at 2.

[17] https://echo.epa.gov/detailed-facility-report?fid=110012141805#pane3110012141805

ED_006328A_00019663-00010

ENVIRONMENTAL JUSTICE

The Biden Administration's Executive Order, "Tackling the Climate Crisis at Home and Abroad" provides in part as follows:

> "To secure an equitable economic future, the United States must ensure that environmental and economic justice are key considerations in how we govern. That means investing and building a clean energy economy that creates well paying union jobs, turning disadvantaged communities — historically marginalized and overburdened — into healthy, thriving communities, and undertaking robust actions to mitigate climate change while preparing for the impacts of climate change across rural, urban, and Tribal areas."

The Guayama region is an environmental justice community with high poverty rates and percentages of residents of African descent and is the most contaminated region in Puerto Rico according to the Toxic Release Inventory as noted above. The Guayama region has among the highest unemployment and school dropout rates in Puerto Rico. The Guayama Region has experienced a sharp decrease in medical services available to this environmental justice community with the closure of two hospitals and only one hospital currently in operation. The AES disposal of CCRs in the Guayama region in proximity to the plant and the AES CCR waste pile imposes disproportionate public health risks to this environmental justice community.

PROCEDURAL INJUSTICE

AES did not post the EA or any of the related documents on its CCR website. The AES remedy selection process has been fraught with procedural law violations seriously obstructing public participation. The main purpose of the process was to provide information on the groundwater contaminated by AES coal ash waste and to prevent further pollution. The Corrective Measures Report ("CMR") was originally posted on the AES webpage in English only and it was not made available in Spanish until a few days prior to the public meeting held by AES. Furthermore, the Report is highly technical, and AES never published a draft suitable for the general public and for non-technical readers. Information on how to access the Report as well as regarding the public meeting was insufficient. While AES invests large sums of money in deceptive advertising campaigns and exerts undue influence on churches, sport clubs, social groups, among others, it does not include in its propaganda any reference to the process for clean-up of the water pollution caused by its coal ash waste and interferes with public participation in the legally mandated process.

AES commissioned the Haley & Aldrich Report that cites section §257.97 of title 40 of the Code of Federal Regulations ("CFR") which establishes the criteria for evaluating factors that must be considered by the operator of a CCR unit, including the degree to which community concerns are addressed by a potential solution. The same page of the Report states that the fourth balancing criterion involves the community's input regarding the proposed corrective alternatives.[18]

As indicated above, AES public notice was deficient: the community meeting held on December 12, 2020, did not comply with the requirement of promoting participation of the communities

[18] Haley & Aldrich Report, p. 3, https://aespuertorico.com/ccr/.

affected by the pollution caused by the coal plant, it did not present alternative corrective measures in detail and it did not address any community concerns.

The meeting was held in Olimpo neighborhood, located in the northeast area of Guayama, more than 10 km away from Puente de Jobos and Miramar, the most communities impacted by the operation of AES power plant and where the proposed corrective measure would be implemented.

In addition, the three access roads to the premises where the meeting took place were fenced and guarded by approximately 80 police officers. AES did not allow people from the communities to drive their cars into the premises' parking lots (access was restricted to the company's employees and directors); the company hired additional security guards and posted them at the entrance and inside the premises; metal detectors and a search area were placed at the main entrance, where people from organizations and communities entered the premises (this did not apply to company directors, who had access through all entrances). AES mobilized its employees to occupy spaces in the meeting. Residents across the street from the premises, in the Olimpo neighborhood, had no knowledge of the activity.

During the community meeting, AES used highly technical language, making it difficult for most people to understand the presentation. AES's experts called into question any approach or solution presented by the public; there was no discussion regarding the potential risks to the community and environment, including potential threats to human health and the environment associated with the excavation, transport, and removal of contaminants. Every one of these actions, denied the affected communities an opportunity for real participation.

CONCLUSION

For all the reasons stated above, Comité Diálogo Ambiental, Inc. requests as follows:

1. That the Permits Management Office deny the construction permit and revoke all permits and approvals for the AES liner construction project.
2. Total and complete removal of the AES coal ash waste pile (Agremax/CCRs) and clean-up of groundwater.
3. Monitoring and decontamination of all areas impacted by the AES toxic coal ash waste (Agremax/CCRs) as well as public health studies related to pollution from the AES operation.
4. Revocation of AES's Siting Consultation and denial of any permits requested by its affiliated companies, such as Fluence.

In Salinas, Puerto Rico, on March 22, 2021.

s/ Ruth Santiago
RUTH SANTIAGO
RUA Núm. 8589
Apartado 518
Salinas, Puerto Rico 00751
Tel. (787) 312-2223
rstgo@gmail.com

s/Laura Arroyo
LAURA ARROYO
RUA Núm. 16653
Earthjustice, 4500 Biscayne Blvd., Suite 201
Miami, FL 33137
Tel. (305) 440-5436
larroyo@earthjustice.org

ED_006328A_00019663-00012

GOVERNMENT OF PUERTO RICO
DEPARTMENT OF ECONOMIC DEVELOPMENT AND COMMERCE
PERMITS MANAGEMENT OFFICE

IN RE: AES PUERTO RICO, L.P LINER CONSTRUCTION PROJECT	**Permit Nos.** 2020-304207-PCD-006243 (2021-SCE-013732); 2020-304207-PCM-008653; (2021-SCE-013731); 2020-304207-PCOC-013253; 2020-304207-DEA-004713 (2021-SCE-013728); 2020-304207-REA-004834 (2021-SCE-013730)

ADMINISTRATIVE COMPLAINT AND REQUEST FOR DENIAL OF CONSTRUCTION PERMIT AND REVOCATION OF AES PERMITS

TO THE PERMITS MANAGEMENT OFFICE:

COMES NOW, Comité Diálogo Ambiental, Inc., El Puente de Williamsburg-Enlace Latino de Acción Climática, Inc., Comité Yabucoeño Pro-Calidad de Vida, Inc., Alianza Comunitaria Ambientalista del Sureste, Inc., Sierra Club Puerto Rico, Inc., Mayagüezanos por la Salud y el Ambiente, Inc., Coalición Organizaciones Anti Incineración, Inc., and Amigos del Río Guaynabo, Inc., and Campamento Contra las Cenizas en Peñuelas, Inc., through the undersigned legal representation and submits comments and requests that the Permits Management Office deny the construction permit and revoke all permits and approvals for the AES Liner Construction Project.

Petitioners:

1. Comité Diálogo Ambiental, Inc. ("CDA") is a community environmental group composed of residents of the Municipality of Salinas and the Guayama Region, organized as a nonprofit corporation under the laws of the Commonwealth of Puerto Rico since 1997. The purposes of the organization are to promote the general welfare of the communities it serves through education and capacity building of residents concerning the adverse impacts of human activities on the ecologic balance of natural systems and the importance of restoring the environment and promoting conditions under which human beings and the environment can exist in harmony to fulfill economic, social, and other needs of present and future generations. Its address is Urbanización Las Mercedes, Calle 13 #71 Salinas, PR 00751, phone number: (787) 543-9981, and email address: valvarados@gmail.com.

2. El Puente de Williamsburg, Inc. - Enlace Latino de Acción Climática ("El Puente – ELAC") is a group whose members are Puerto Rico residents concerned about the impacts

ED_006328A_00019664-00001

of climate change on the Island.[1] El Puente -ELAC promotes multisector discussion on the predictable effects of climate change in Puerto Rico; disseminates studies and information on climate change scenarios; generates discussion of mitigation and adaptation alternatives and their viability for Puerto Rico, and determines optimal parameters for planning for climate change, sea level rise, food security, water availability, and the impacts of power generation on climate change. Its address is 800 Ave. RH Todd, Suite 318 (Piso 3), Comercial 18, Pda. 18, Santurce, P.R. 00907, phone number is (787) 545-5118, and email address is fcintronmoscoso@elpuente.us.

3. Comité Yabucoeño Pro-Calidad de Vida, Inc. ("YUCAE") is a non-profit community-based group that ensures Yabucoa residents enjoy a sustainable development where economic development, social equity and the conservation of ecosystems are integrated.[2] YUCAE's view is to achieve an effective commitment of diverse civic groups, religious and educational institutions, whose active participation promotes the empowerment of the community, and the search for solutions to the main environmental, economic and social problems faced by Yabucoa's communities. Its mailing address is HC04 Box 6901 Yabucoa, P.R. 00767-9511, phone number is (787) 385-5422, and email address is ausubopr88@gmail.com.

4. Alianza Comunitaria Ambientalista del Sureste, Inc. ("ACASE") is a non-profit environmental organization whose members are from Humacao, Yabucoa, Las Piedras, Caguas, and Patillas. ACASE was created in response to the disposal of coal ash in the Humacao landfill.[3] ACASE raises awareness in the communities of Humacao and neighboring towns of the health impacts from coal combustion and coal ash. ACASE also offers talks and conferences on renewable energy, seed harvesting, and the public debt of Puerto Rico. Its mailing address is Apartado 10140, Humacao, P.R. 00972, phone number is (787) 514-2917, and email address is acasepr@gmail.com.

5. Sierra Club Puerto Rico, Inc. ("Sierra Club PR") is the local chapter of the biggest, oldest, and most influential environmental organization in the United States. Founded in 1892, the Sierra Club has more than three million members and followers, all inspired by the marvels of nature. Sierra Club's mission is to explore, enjoy, and protect natural treasures. Sierra Club's Puerto Rico chapter was founded in 2005. Since its beginning, the chapter has collaborated with different communities and community-based organizations to protect natural areas, promote public policies that protect the public health and environment, mobilize communities to resist pollution projects such as a proposed methane gas pipeline and waste incinerators, among other victories. After Hurricane Maria, the chapter has been helping develop sustainable and self-sufficient projects in communities around the island. Its address is 1016 Avenida Ponce de León; Río Piedras, P.R. 00925, and its mailing

[1] Organized as a nonprofit corporation since 1982 and authorized under the laws of the Commonwealth of Puerto Rico since 2015.
[2] Created in 1988 and organized as a nonprofit corporation under the laws of the Commonwealth of Puerto Rico since 1989.
[3] Created in 2015 and organized as a nonprofit corporation under the laws of the Commonwealth of Puerto Rico since 2019.

ED_006328A_00019664-00002

address is PO Box 21552, San Juan, PR 00931-1552, phone number is (939) 414-3600 and email address is adriana.gonzalez@sierraclub.org.

6. Mayagüezanos por la Salud y el Ambiente, Inc. ("MSA") is a community and environmental organization. MSA's volunteers offer educational, organizational, research and participatory services aimed at the defense and protection of natural resources, mainly in the western area of Puerto Rico.[4] MSA is the co-manager of the Caño Boquilla Natural Reserve. MSA focuses on the Reserve, renewable energy, and the quality and protection of coastal waters and the rivers that nourish them. Its address is P.O. Box 3422, Mayagüez, P.R. 00681-3422, phone number is (787) 243-1474, and email address is julia.mignuccisanchez@gmail.com.

7. Coalición de Organizaciones Anti Incineración, Inc. ("COAI") is a coalition of citizens and more than 35 organizations concerned about waste incinerators in Puerto Rico, especially the solid waste incinerator proposed by Energy Answer-Arecibo, LLC, in Arecibo.[5] COAI promotes clean energy and opposes the generation of energy with incineration. Its address is Valle Escondido #9, Guaynabo, P.R. 00971-8000, phone number is (787) 360-6358, and emailing address is gmchg24@gmail.com.

8. Amigos del Río Guaynabo, Inc. ("ARG") is an environmental and community organization created for the defense of the natural resources of Puerto Rico, especially water resources.[6] Its address is Valle Escondido #9, Guaynabo, P.R. 00971-8000, phone number is (787) 360-6358, and emailing address is gmchg24@gmail.com.

9. Campamento Contra las Cenizas en Peñuelas, Inc. is a community and environmental non-profit organization dedicated to the fight against combustion residue from fossil fuel energy generation, especially the deposit of toxic coal ash from the AES coal plant in Guayama. Its mission is to raise community awareness about the dangers from toxic col ash and the urgency of ending coal combustion in Puerto Rico as soon as possible. Its mailing address is HC3 Box 15516, Peñuelas, P.R. 00624; the phone number is (787) 341-7774, and email address is noloseus@gmail.com.

Respondents:

1. The AES Puerto Rico, L.P. Its address is Route 3, KM 142, Bo. Pte. Jobos, Guayama, Puerto Rico 00784, phone number is (787) 866-8117, and web address is http://aeshelpline.com/

The AES Puerto Rico, L.P. ("AES") coal burning power plant in Guayama, Puerto Rico accumulates hundreds of thousands of tons of coal ash waste at its plant site. Evidence of environmental contamination by AES is documented in various groundwater monitoring reports

[4] Established in 1989 and organized as a nonprofit corporation under the laws of the Commonwealth of Puerto Rico since 1990.
[5] Organized as a nonprofit corporation under the laws of the Commonwealth of Puerto Rico since 2017.
[6] Organized as a nonprofit corporation under the laws of the Commonwealth of Puerto Rico since 2004.

ED_006328A_00019664-00003

prepared by AES's contractor, DNA Environmental, LLC as a requirement of the Federal Coal Combustion Residuals Rule ("CCR Rule"). The data from the DNA reports indicates that the groundwater in the downstream gradient wells of the coal combustion waste, called Agremax™ (especially the wells designated MW-3 and MW-4) is highly contaminated with coal ash waste when compared to upstream wells (designated MW-1 and 2).[7] AES's polluting practices have already contaminated part of the South Coast Aquifer, the sole source of potable water for tens of thousands of people in Puerto Rico. The facts that form the basis of this administrative complaint occurred and continue to occur at the AES Puerto Rico, L.P. plant site, Route 3, KM 142, Bo. Pte. Jobos, Guayama, Puerto Rico 00784.

Physical Address of concern:

AES Puerto Rico, L.P. plant site, Route 3, KM 142,
Bo. Pte. Jobos,
Guayama, Puerto Rico 00784.

INTRODUCTION

This Administrative Complaint, Request for Denial of Construction Permit and Revocation of AES Permits along with the attached Report by Ranajit Sahu, PhD. are submitted on behalf of Comité Diálogo Ambiental, Inc., El Puente de Williamsburg, Inc.-Enlace Latino de Acción Climática, Comité Yabucoeño Pro-Calidad de Vida, Inc., Alianza Comunitaria Ambientalista del Sureste, Inc., Sierra Club Puerto Rico, Inc., Mayagüezanos por la Salud y el Ambiente, Inc., Coalición de Organizaciones Anti-Incineración, Inc., Amigos del Río Guaynabo, Inc., Campamento Contra las Cenizas en Peñuelas, Inc.

ARGUMENT

I. AES OBTAINED THE PERMITS FOR THE LINER CONSTRUCTION PROJECT BASED ON FRAUDULENT MISREPRESENTATIONS

As required by the CCR Rule, AES commissioned the Corrective Measures Assessment ("CMA") Report.[8] The Report attempts to present clean up alternatives for the aquifer contaminated with toxic AES coal ash, known as Agremax™, which AES has accumulated in an immense pile for years and left in direct contact with the soil and exposed in the open at its plant in Guayama, Puerto Rico.

---

[7] *See* DNA-Environment, LLC, 2019 CCR Annual Groundwater Monitoring and Corrective Action Report AES Puerto Rico LP, Guayama, Puerto Rico, January 31, 2020, https://www.aes.com/sites/default/files/2021-02/190173_AES_2019_Groundwater_Monitoring_and_Corrective_Action_Report%20(1)_0.pdf (last visited April 12, 2021). [Hereinafter, "DNA-Environment 2019 CCR Report"].

[8] Haley & Aldrich, Inc., Report on Corrective Measures Assessment ("CMA") AES Puerto Rico - Agremax ™ Staging Area Guayama, Puerto Rico, (September 2019, amended November 8, 2019), *available at* https://www.aes.com/sites/default/files/2021-02/Corrective-Measures-Assessment-English.pdf (last visited April 12, 2021). [Hereinafter, "Haley & Aldrich Report"].

ED_006328A_00019664-00004

AES, has opted to excavate 4-6 feet of contaminated soil, replace it with clean fill material, install a liner, and pipe storm water to a pond adjacent to the coal pile as the main components of the corrective measures. In furtherance of the corrective measures proposed, AES filed various documents with the Puerto Rico Permits Management Office ("PMO"), including an Environmental Assessment ("EA"). In the EA submitted by AES to obtain approvals and permits for the liner construction project, AES falsely alleges the AES-PR plant produces 454 Megawatts of energy.[9] In reality, AES currently has an installed capacity of 524 MW.[10] That is an extra 70 MW of generation capacity, with the corresponding amount of additional coal ash waste, than what AES reported to the PMO in its filings to the administrative agency.

Furthermore, the Environmental Assessment submitted by AES falsely alleges as follows:

> The plant is classified as a zero liquid discharge process water plant. The AES-PR plant is considered zero discharge because it reuses its process waters and does not discharge process waters either to PRASA or to bodies of water.[11] (Translation provided)

Again, AES's allegations in the EA are false. In 2012, the Environmental Protection Agency ("EPA") imposed a fine of $170,000.00 against AES for discharging contaminants into the wetlands near the Guayama plant and for multiple violations of the Clean Water Act ("CWA"). The AES Consent Agreement and Final Order, Docket No. CWA-02-2012-3452 establishes as a finding of fact that AES, "discharged process wastewater from an overflow of the cooling tower basin through outfall serial number 003 into the wetlands" and "industrial wastewater and/or stormwater associated with industrial activity through outfall serial number 003 into a water of the United States without a National Pollutant Discharge Elimination System ("NPDES") permit, in violation of section 301 (a) of the CWA" in addition to illegal discharges of stormwater.[12] The EPA issued an Administrative Compliance Order ("ACO") in Docket No. CWA-02-2012-3100 to address the years of illegal discharges by AES in violation of the CWA. Subsequently, and due to AES's continuous illegal discharges and violations of the CWA, EPA issued an Administrative Order on Consent with the following findings:

> Based on the findings of the CEI (NPDES Water Compliance Inspection Report (CEI Report), dated October 3, 2011) and further investigations, EPA found Respondent to be in violation of the CWA and the applicable NPDES regulations for its discharges of pollutants into waters of the United States without NPDES permit coverage and for its failure to apply for a NPDES permit. On December 16, 2011, EPA issued to Respondent (AES) an Administrative Compliance Order (ACO), Docket Number CWA-02-2012-3100,

---

[9] Caribbean Architects & Engineers and AES Puerto Rico, Evaluación Ambiental Agremax™ Staging Area Liner Project AES Puerto Rico L.P. Guayama, PR ("EA"), p. 3, October 2020. [Hereinafter. "EA"].

[10] *Moción para Presentar Reporte de Estatus y Progreso Final y Solicitud de Relevo de Orden*, Docket No. NEPR-AP-2020-0001, January 29, 2021, p. 23, https://energia.pr.gov/wp-content/uploads/sites/7/2021/02/Mocion-para-Presentar-Reporte-de-Estatus-y-Progreso-Final-y-Solicitud-de-Relevo-de-Orden-NEPR-AP-2020-0001-1.pdf (last visited April 12, 2021).

[11] EA, *supra*, p.3.

[12] *AES Consent Agreement and Final Order*, Docket No. CWA-02-2012-3452, March 27, 2012, pp. 3, 5 and 6, https://yosemite.epa.gov/OA/RHC/EPAAdmin.nsf/Filings/0B584DB6CF2B0B89852579CF001B82E0/$File/AES123452.CAFO.pdf (last visited April 12, 2021). Attached as Exhibit 2.

ED_006328A_00019664-00005

in an effort to bring Respondent into compliance with the CWA and its implementing NPDES regulations.[13]

In the 2015 Administrative Order on Consent Docket No. CWA-02-2015-3102, ("AOC"), EPA documents additional CWA violations by AES:

> Based upon an EPA Region 2 enforcement officer walkthrough of the Facility on January 28, 2015, and further review of Respondent's submittals, EPA found Respondent to be in non-compliance with the MSGP and ACO, as set forth below: a. failure to provide a Final Progress Report indicating and documenting the implementation of the non-structural BMPs and structural BMPs at the Facility, per the EPA May 5th, 2013 letter; b. Part 2.1.2.5 (Erosion and Sediment Controls) — lack of soil stabilization in areas near the coal pile, limestone dome, and coal pile runoff pond; c. Part 2.1.2.5 (Erosion and Sediment Controls) — lack of installation and/or replacement of the silt fence in the perimeter of the coal storage piles and coal handling areas; d. Part 2.1.2.12 (Dust Generation & Vehicle Tracking of Industrial Materials) — lack of a dust and fugitive emissions control plan for areas in which ashes are handled (e.g., Agremax™ storage pile); e. Part 3.2 (Conditions Requiring Review to Determine if Modifications Are Necessary) — did not address the exceedances of the applicable benchmarks (e.g., aluminum and iron) for the period up to June 2014 concerning storm water discharges through outfalls 001 and 002; f. failure to prepare and submit the comprehensive site inspection reports pursuant to Part 4.3.2 of the MSGP for the December 13, 2012 and December 19, 2013 comprehensive site inspections; and g. Part 7.1 (Reporting Monitoring Data to EPA) — failure to submit MSGP discharge monitoring report forms (MDMR forms) all monitoring data collected since Respondent obtained MSGP coverage on September 29, 2013.[14]

Furthermore, EPA has documented AES violations to National Pollutant Discharge Elimination System ("NPDES") permit number PRR053093 since January 2018.[15] AES has failed to submit Discharge Monitoring Reports as required under the NPDES permit since at least January 2018. Additionally, AES has incurred in violations that include: "WW Storm Water Non-Construction - Discharge without a permit, WW Storm Water Non-Construction - Failure to Implement SWPPP/SWMP, WW Storm Water Non-Construction - Failure to properly install/implement BMPs, WW Storm Water Non-Construction - Failure to properly operate and maintain BMPs, and WW Storm Water Non-Construction - Failure to submit required report (non-DMR)"[16] since approximately November or December 2019.

Therefore, it is clear that AES is not a "zero liquid discharge process water plant" and that AES knowingly submitted false information to the PMO both as to the water discharges and the generation capacity. Law 161-2009, as amended, presumes the accuracy of permits, but "when

---

[13] *AES Puerto Rico, L.P. Administrative Order on Consent*, p. 8. Docket No. CWA-02-2015-3102, ("AOC"). (Attached as Exhibit 3).
[14] AOC, pages 9-10.
[15] *See* EPA, AES Puerto Rico L.P. Detailed Facility Report, *available at* https://echo.epa.gov/detailed-facility-report?fid=110012141805#pane3110012141805 (last visited April 12, 2021).
[16] *Id.*

there is fraud, deceit, deception, extortion, bribery or the commission of any crime in granting or denying a final determination or permit, or in such cases in which the structure poses a risk to the health or safety, or to environmental or archaeological conditions, the final determination so issued and the permit granted by the Permit Management Office, by the Autonomous Municipality with I to V granted hierarchy or by the authorized professional, must be revoked..."[17] All permits issued by PMO to AES should be revoked and pending permit applications should be denied.

II. AES'S PLAN DOES NOT MEET FEDERAL REQUIREMENTS AND LACKS PUBLIC HEALTH PROTECTION MEASURES

Expert analysis of the AES liner construction project concludes that the AES filings raise questions,

> Relating to the liner components and their compatibility with the wastes that will be accumulated on the liner. Additional questions remain relating to the preparation of the sub-surface before placement of the liner including the extent to which previously contaminated soils will remain in place or how it will be verified that all contaminated soils are removed, especially given the very shallow depth to groundwater in the area. As noted, construction of the liner so close to groundwater cannot protect against contaminant migration and achieve adequate source control. And, lastly, no construction details, which are essential to ensuring that the liner will be effective, are provided.[18]

The groundwater level according to AES's documents is 3 feet below the liner.[19] AES proposes to excavate 4-6 feet and replace the excavated contaminated soil or materials with clean fill, then place the liner and use the site to again pile its coal ash. AES's plan would violate the location requirements of the federal CCR rule (40 CFR Part 257, subpart D). As noted in the attached Sahu Report:

> Pursuant to 40 C.F.R. § 257.60(a), waste piles must be constructed with a base that is located no less than 1.52 meters (five feet) above the upper limit of the uppermost aquifer. Clearly, by AES' own admission, the liner does not meet this standard. AES has also failed to demonstrate that there will not be an intermittent, recurring, or sustained hydraulic connection between any portion of the base of the CCR unit and the uppermost aquifer due to normal fluctuations in groundwater elevations (including the seasonal high-water table), as required by the regulation.[20]

---

[17] Law 161-2009, as amended, Article 9.10, 23 L.P.R.A. § 9019i.
[18] See Comments on the Liner Proposed for AES, Puerto Rico by Ranajit Sahu, PhD attached as Exhibit 1.
[19] Note that this high level of groundwater was not previously disclosed by AES and, in fact, AES' 2019 Corrective Measures Assessment indicates a groundwater level greater than 10 feet below the ground surface. *See* Haley & Aldrich Report.
[20] *Id.*

ED_006328A_00019664-00007

Furthermore, AES proposes to use the CCR waste known as Agremax™, as part of the of the liner system. Using the Agremax™ as project component defeats the purpose of the liner that is meant to establish a barrier between the CCRs and the groundwater.

In addition, there are inconsistencies and omissions concerning the testing of the CCR waste to be placed on top of the liner. Specifically, as explained in the Sahu Report, AES indicates that the concentrations of various metals are "zero." In fact, the reported concentrations for almost all of the metals such as arsenic, cadmium, copper, iron, mercury, nickel, and lead are shown as zero, meaning less than 0.02 ppm or 0.005 ppm depending on the metal. This is not credible and indicates that the analyses are likely flawed and therefore unreliable. It is concerning that this characterization of the wastes was used/might have been used for liner compatibility analysis.

In addition, the Sahu Report also notes that, "the reported levels of calcium, magnesium, and potassium from the 2018 tests are quite different and much higher than the levels reported in the liner compatibility studies" and that, "high levels of these constituents can adversely affect the clay in the GCL."[21] In fact, AES did not consider the constituents of concern in the liner compatibility tests. Therefore, the record is barren of any data that might indicate whether the proposed liner would be an effective barrier against leaching from Agremax™.

AES commissioned studies show that toxic CCR from its coal plant is polluting groundwater with lithium, selenium and molybdenum. The AES commissioned studies on groundwater quality conducted by DNA Environmental, confirmed that metals such as lithium, selenium and molybdenum have leached from the AES coal ash waste pile into the aquifer, its toxic concentrations exceeding 4-11 times the safety levels.[22]

The 2017 Annual Groundwater Monitoring Report for the AES Guayama plant site, and subsequent reports required by the CCR Rule, indicate that the groundwater in downgradient wells, especially wells MW-3 and MW-4, is highly contaminated with coal ash pollutants.[23] When compared with the upgradient wells (MW-1 and 2), the levels of coal ash contaminants in the downgradient wells are orders of magnitude higher, depending on the contaminant. The direction of groundwater flow is away from the coal ash waste pile and towards the sea and a coastal community visible from the satellite photograph in the Report. These elevated levels of pollutants indicate the AES coal ash waste pile is releasing hazardous chemicals to the groundwater, which are flowing offsite. These toxic metals cause neurological damage, gout, and liver and kidney disease in humans. In addition, selenium is highly toxic to fish and other aquatic species, and it bioaccumulates, meaning it can permanently destroy wildlife populations as it moves through the environment over a period of years. The proposed AES liner construction would continue to pollute groundwater.

An EPA study using the Leaching Environmental Assessment Framework ("LEAF") shows that aluminum, arsenic, boron, cadmium, chloride, chromium, fluoride, lead, lithium,

---

[21] *Id.*
[22] AES Puerto Rico, CCR RULE Compliance Data and Information, Groundwater Monitoring and Corrective Action Reports 2017-2020, *available at* https://www.aespuertorico.com/en/ccr-0 (last visited April 12, 2021)
[23] *Id.*

ED_006328A_00019664-00008

molybdenum, selenium, sulfate, and thallium can leach from the AES coal ash waste at high levels and then contaminate the local environment around the sites at which coal ash has been disposed.[24]

Sample analyses commissioned by Earthjustice in July 2019 determined that the level of arsenic found in the coal ash deposited in Urb. Parque Gabriela and the Ranchos Guayama community, in Salinas, and the Dulces Sueños Connector, in Guayama, exceeds EPA standards and is considered harmful to human health --from 6 to 15 parts per million (ppm). These levels are 9 to 22 times higher than the level considered safe for arsenic in residential soils, and 2 to 5 times higher than the level considered safe for soil in industrial properties established by the EPA. These levels of contaminants raise questions regarding the status of all coal ash land fill sites in Puerto Rico where AES discharged its waste. These fills are not monitored; however, the same chemicals and dangerous metals can contaminate more groundwater.

The 2015 Coal Combustion Residuals Rule, mandates that companies that pollute groundwater above federal health standards must develop a strategy to prevent new emissions, ameliorate pollution, and restore the affected area to their original condition. 40 C.F.R. § 257.96 (a).

AES's selected remedy to allegedly comply with the CCR Rule, namely -installation of a liner plus Monitored Natural Attenuation ("MNA"), fails most of the criteria and objectives of the applicable regulation, 40 CFR 257.97(b) and (c), because it does not entail removal of the pollutants in the groundwater. This is cause for concern because the direction of the flow of groundwater is moving away from the AES pile of coal ash waste towards the coastal community and then to the bay.

AES's plan is flawed for several reasons. The plan does not meet CCR Rule requirements because of the deficiencies in the research commissioned by AES and the limitations of the proposed solutions. These are serious deficiencies and make the cleanup plan inadequate to remedy past and ongoing contamination of groundwater, air, and (potentially) surface waters with CCR from the AES plant. The law requires AES to submit a plan to the community that meets federal standards.

The measures proposed by AES do not prevent continued contamination from the CCR waste pile. The installation of a plastic liner to reduce future groundwater contamination, would provide, at best, only a temporary barrier to CCR contaminants. It does not meet the standards of federal law and would not be effective in the long run. The AES cleanup proposal will not stop ongoing contamination from CCRs. Contaminated runoff and toxic fugitive dust are not adequately addressed in the AES proposed measures.

AES does not propose long-term or truly effective solutions to avoid continuous toxic CCR contamination. AES's plan does not present an effective solution to prevent the continued spread

[24] A.C. Garrabrants, D.S. Kosson, R. DeLapp and Peter Kariher, Leaching Behavior of "AGREMAX" Collected from a Coal-Fired Power Plant in Puerto Rico, EPA 600/R-12/724 December 2012 | www.epa.gov/ord. See also, Independent laboratory tests conducted by TestAmerica and background levels for these metals taken from ATSDR Study, available at http://www.atsdr.cdc.gov/HAC/PHA/reports/isladevieques_02072003pr/tables.html#T2. (last visited April 12, 2021).

of CCR via air, groundwater and/or surface runoff. Containment measures for CCR should include placement in secure storage silos with impermeable floors and walls, as well as engineering safeguards to contain CCR under severe wind and rain conditions in seismic-activity proof locations.

AES did not investigate or characterize the nature and extent of the spread of contaminants from the CCR waste pile using the Leaching Environmental Assessment Framework ("LEAF"),[25] a battery of tests more suited to detecting the leaching potential of coal combustion residuals. The Coal Combustion Residues Rule requires AES to characterize the nature and extent of CCR releases. 40 C.F.R. § 257.95 (g) (1). This is an essential first step to develop a cleanup plan.

The EA indicates that the project site is a flood- prone area, with flood levels exceeding 3 meters. In addition, the EA documents the wetland area in the southwest area of the project site where AES proposes to continue to accumulate tens of thousands of tons of coal ash waste. Lithium variations above the drinking water detection level were detected in the extreme southwest of the property in the TW-C well, yet no explanation is provided for these data.[26] Furthermore, AES failed to survey the large wetland area just south of the plant to determine if there were heavy metals from CCR contamination in its sediment, surface water, or its underlying groundwater. Contamination of the wetland areas is likely to negatively impact aquatic life, birds, and crustaceans. Since the area is a habitat for game birds caught for human consumption, this can have adverse impacts on both public health and the local economy. Furthermore, the EA does not address the impact of proposed excavation on the aquifer water table, wetlands, and a flood- prone area.

AES did not investigate CCR contamination in discharge areas of Las Mareas Bay. Although AES admits that contaminated groundwater is discharged into the bay in the low-tide zone,[27] it did not sample the water near the port nor the sediments in the area. Instead, AES sampled much deeper waters in the bay.

AES cited an outdated survey on groundwater use in Las Mareas, a community neighboring the contaminated groundwater to the south. The survey used by AES dates back to 2002. To ensure that all households obtain water from a public drinking-water pipe or if there are existing private wells in the area, AES must carry out a new survey.

III. AES' PLAN WILL WORSEN FUGITIVE DUST POLLUTION

The AES coal ash waste pile grew to an accumulated amount of (at least) 487,000 tons of CCRs (2019), making it the largest CCR pile of any jurisdiction in the United States and its

---

[25] An EPA study using the Leaching Environmental Assessment Framework ("LEAF") shows that aluminum, arsenic, boron, cadmium, chloride, chromium, fluoride, lead, lithium, molybdenum, selenium, sulfate, and thallium can leach from the AES coal ash waste at high levels and then contaminate the local environment around the sites at which coal ash has been disposed. A.C. Garrabrants, D.S. Kosson, R. DeLapp and Peter Kariher, Leaching Behavior of "AGREMAX" Collected from a Coal-Fired Power Plant in Puerto Rico, EPA 600/R-12/724 December 2012 | www.epa.gov/ord.

[26] Haley & Aldrich Report, p.100-110, https://www.aes.com/sites/default/files/2021-02/Corrective-Measures-Assessment-English.pdf (last visited April 12, 2021).

[27] DNA-Environment 2019 CCR Report (last visited April 12, 2021).

ED_006328A_00019664-00010

territories.[28] Fugitive dust from the CCR waste reaches nearby communities on a daily basis and contaminates the lungs of people who breathe the toxics contained in the ashes.

A July 2017 CCR Inspection Report for the AES coal ash waste pile at the AES plant site containing 430,000 tons of CCRs notes that, "localized rills were observed on the surface of stockpile slopes, they appeared to be related to over-watering by the water sprinkler . . . . The water truck was not operational at the time. Some fugitive dust caused by wind was observed on the west slope of the Stockpile at the time of inspection." Regarding the CCR pile, the Report describes that it had "increased to an estimated height of 120 feet," while its "slopes have become longer and steeper."[29]

AES's plan according to the EA and its engineering consultants, Winston Esteves and Steven Putrich (Haley & Aldrich consultant), is to move half of the accumulated CCR on the Guayama site in order to install the first section of a plastic liner. The EA and the Report indicate that the liner placement would be done in two phases: phase 1 would consist of placing half of the CCR pile over the other half (located in an area identified for phase 2); the plastic liner would then be installed in the original phase 1 area, and finally the entire CCR pile accumulated in the phase 2 area would be placed over the liner located in the phase 1 area.[30]

The movement of the AES coal ash waste would inevitably create clouds of toxic ash particles and migrate to nearby and densely populated communities such as Miramar, Santa Ana, San Martín, Puerto de Jobos, Mosquito and San Felipe. Residents of these nearby communities have filed several complaints with the Department of Natural and Environmental Resources because of fugitive coal ash dust reaching their homes on normal days of operation of the plant. The correction measures that AES proposes would require excavation and moving tens of thousands of tons of coal ash waste and would inevitably mobilize more fugitive dust than during normal operations.

The Siting Location issued by the Puerto Rico Planning Board for the AES plant required AES to transport and dispose of the coal ash waste outside of Puerto Rico due to the anticipated serious health hazards associated with the heavy metals and constituents of concern.

In the permit application documents, AES does not address compliance with Puerto Rico Law 5-2020, known as "Law to Prohibit the Deposit and Disposal of Coal Ash or Coal Combustion Residues in Puerto Rico," which obliges the company to remove the ashes of its facilities within 180 days.

IV. AES HAS A LONG HISTORY OF NONCOMPLIANCE WITH ENVIRONMENTAL LAWS AND REGULATIONS

A letter from the EPA Region 2, Regional Administrator to the Puerto Rico Environmental Quality Board, dated November 11, 2011, indicates as follows:

---

[28] CCR 2017 Annual Inspection Report AES Puerto Rico, p. 3, July 2017, https://www.aes.com/sites/default/files/2021-02/2017_Annual-Inspection-Report.pdf (last visited April 12, 2021).
[29] *Id.*
[30] Haley & Aldrich Report, p. 13 (section 4.3.1), https://www.aes.com/sites/default/files/2021-02/Corrective-Measures-Assessment-English.pdf (last visited April 12, 2021).

ED_006328A_00019664-00011

> "We have inspected ten sites in the municipalities of Arroyo, Guayama, and Salinas, where Agremax has been placed on the land, including residential areas and areas close to wetlands and surface water. It is our observation, based on these inspections and subsequent investigation, that the land placement of Agremax may constitute disposal at several of the sites inspected. The volumes observed placed on the land in some cases appeared to far exceed those we would consider necessary for the appropriate engineering use of the construction material for which Agremax was allegedly being substituted. In addition, several of the Agremax land placement sites appeared to have been abandoned, in that, despite the presence of signs indicating construction permit issuance, the slated construction projects had not been initiated and no construction equipment or activity was noted, while several sites appeared overgrown and had been used for the illegal deposition of waste materials."

The letter further states as follows:

> The locations at which some of the deposition of Agremax has taken place overlie shallow sole source drinking water aquifers and are thus particularly sensitive to environmental harm. A 2007 EPA report documents known damage cases from the mismanagement of coal ash in unlined landfills and surface impoundments and the subsequent contamination of drinking water aquifers through the leaching and ground water transport of contaminants in the ash. Two EPA Orders, issued in 2003 and 2004 under the Comprehensive Environmental Response, Compensation, and Liability Act, and a subsequent 2004 citizen suit taken under Section 7002 of the Resource Conservation and Recovery Act, address aquifer contamination by the leaching of toxic constituents from an unlined coal ash landfill in Pines, Indiana. The EPA proposed rule states that: ". . .EPA recognizes that seven proven damage cases involving the large scale placement, akin to disposal, of [coal combustion residues] has occurred under the guise of "beneficial use". . ." and that ". . .therefore, today's proposed rule explicitly removes these types of uses from the category of beneficial use.. ." (75 F. R. 35, 161). *Id.*

As an example of one of the disposal locations identified, an EPA inspector found that an access road adjacent to the Pfizer Guayama plant is "far more extensive (wider, higher) than appropriate for stated end use." Field Notes taken by L. Grossman of EPA.

As noted above, AES has repeatedly violated the Clean Water Act. AES has also repeatedly failed to comply with the orders of the Environmental Quality Board, now Department of Natural and Environmental Resources ("EQB/DNER") (Ref. Nos. 17-14 and 17-21),[31] which require required AES to cover the CCR waste pile at its facilities before the passage of Hurricanes Irma and María to avoid fugitive dust and to safeguard the health and safety of the residents of the areas surrounding the plant. Prior to Hurricane Irma, EQB/DRNA ordered AES to contain and cover the coal combustion residuals and/or Agremax™ at its facilities to safeguard the health and safety of the residents (Resolution No. 17-14). AES refused to comply with the order and was fined

[31] Puerto Rico Environmental Quality Board 96-9-1, 96-39-1, available at http://www.ac,remax.com/Downloads/R-00-96-2%20ENGLISH.pdf, and 00-14-2 available at http://www.agremax.com/Downloads/R-00-14-2%20ENGLISH.pdf R. 96-39-1 at 2.

ED_006328A_00019664-00012

$95,000.00. AES failed to comply with a second order issued by EQB, with the same requirements, as Hurricane Maria approached.

The Toxic Release Inventory ("TRI") published by the EPA reveals that the AES coal-fired plant is the largest polluting plant in Puerto Rico. According to TRI, since AES began operations, it has emitted 8,560,412.19 pounds of toxic substances and 63 percent of that pollution has been released into the air. Among the toxic substances released by AES daily into the air are arsenic, mercury, ammonia, barium, chromium, vanadium, and sulfuric acid.

EPA has also documented one informal enforcement action in the past 5 years, a Clean Air Act ("CAA") notice of violation dated 8/28/2020.[32]

ENVIRONMENTAL JUSTICE

The Biden Administration's Executive Order, "Tackling the Climate Crisis at Home and Abroad" provides in part as follows:

> To secure an equitable economic future, the United States must ensure that environmental and economic justice are key considerations in how we govern. That means investing and building a clean energy economy that creates well- paying union jobs, turning disadvantaged communities — historically marginalized and overburdened — into healthy, thriving communities, and undertaking robust actions to mitigate climate change while preparing for the impacts of climate change across rural, urban, and Tribal areas.[33]

The Guayama region is an environmental justice community with high poverty rates and percentages of residents of African descent and is the most contaminated region in Puerto Rico according to the Toxic Release Inventory as noted above. The Guayama region has among the highest unemployment and school dropout rates in Puerto Rico. The Guayama Region has experienced a sharp decrease in medical services available to this environmental justice community with the closure of two hospitals and only one hospital currently in operation. The AES disposal of CCRs in the Guayama region in proximity to the plant and the AES CCR waste pile imposes disproportionate public health risks to this environmental justice community.

PROCEDURAL INJUSTICE

AES did not post the EA or any of the related documents on its CCR website. The AES remedy selection process has been fraught with procedural law violations seriously obstructing public participation. The main purpose of the process was to provide information on the groundwater contaminated by AES coal ash waste and to prevent further pollution. The Corrective

---

[32] EPA, AES Puerto Rico L.P. Detailed Facility Report https://echo.epa.gov/detailed-facility-report?fid=110012141805#pane3110012141805, *supra*.

[33] See Biden Administration, Executive Order on Tackling the Climate Crisis at Home and Abroad, January 27, 2021, Section 219, https://www.whitehouse.gov/briefing-room/presidential-actions/2021/01/27/executive-order-on-tackling-the-climate-crisis-at-home-and-abroad/

ED_006328A_00019664-00013

Measures Assessment ("CMA") was originally posted on the AES webpage in English only, and it was not made available in Spanish until a few days prior to the public meeting held by AES. Furthermore, the Report is highly technical, and AES never published a draft suitable for the general public and for non-technical readers. Information on how to access the Report as well as regarding the public meeting was insufficient. While AES invests large sums of money in deceptive advertising campaigns and exerts undue influence on churches, sport clubs, social groups, among others, it does not include in its propaganda any reference to the process for clean-up of the water pollution caused by its coal ash waste and interferes with public participation in the legally mandated process.

AES commissioned the Haley & Aldrich Report that cites section §257.97 of title 40 of the Code of Federal Regulations, ("CFR") which establishes the criteria for evaluating factors that must be considered by the operator of a CCR unit, including the degree to which community concerns are addressed by a potential solution. The same page of the Report states that the fourth balancing criterion involves the community's input regarding the proposed corrective alternatives.[34]

As indicated above, AES' public notice was deficient: the community meeting held on December 12, 2020, did not comply with the requirement of promoting participation of the communities affected by the pollution caused by the coal plant, it did not present alternative corrective measures in detail, and it did not address any community concerns.

The meeting was held in the Olimpo neighborhood, located in the northeast area of Guayama, more than 10 kilometers away from Puente de Jobos and Miramar, the communities most impacted by the operation of the AES power plant and where the proposed corrective measure would be implemented.

In addition, the three access roads to the premises where the meeting took place were fenced and guarded by approximately 80 police officers. AES did not allow people from the communities to drive their cars into the premises' parking lots (access was restricted to the company's employees and directors); the company hired additional security guards and posted them at the entrance and inside the premises; metal detectors and a search area were placed at the main entrance, where people from organizations and communities entered the premises (this did not apply to company directors, who had access through all entrances). AES mobilized its employees to occupy spaces in the meeting. Residents across the street from the premises, in the Olimpo neighborhood, had no knowledge of the activity.

During the community meeting, AES used highly technical language, making it difficult for most people to understand the presentation. AES's experts called into question any approach or solution presented by the public; there was no discussion regarding the potential risks to the community and environment, including potential threats to human health and the environment associated with the excavation, transport, and removal of contaminants. Every one of these actions, denied the affected communities an opportunity for real and meaningful participation.

---

[34] Haley & Aldrich Report, p. 3, https://aespuertorico.com/ccr/.

ED_006328A_00019664-00014

CONCLUSION

For all the reasons stated above, the above-referenced organizations request as follows:

1. That the Permits Management Office and the Department of Natural and Environmental Resources deny the construction permit and revoke all permits and approvals for the AES liner construction project.
2. That the Permits Management Office and the Department of Natural and Environmental Resources order the total and complete removal of the AES coal ash waste pile (Agremax/CCRs) and clean-up of groundwater.
3. That the Permits Management Office and the Department of Natural and Environmental Resources order the monitoring and decontamination of all areas impacted by the AES toxic coal ash waste (Agremax/CCRs) as well as public health studies related to pollution from the AES operation.
4. That the Permits Management Office AES's Siting Consultation and deny any permits requested by its affiliated companies, such as Fluence.

In Salinas, Puerto Rico, on April 13, 2021.

s/ Ruth Santiago
RUTH SANTIAGO
RUA No. 8589
Apartado 518
Salinas, Puerto Rico 00751
T: (787) 312-2223
E: rstgo@gmail.com

s/ Lisa Evans
LISA EVANS
Earthjustice
21 Ocean Ave.
Marblehead, MA 01945
T: (781) 631-4119
E: levans@earthjustice.org

s/ Laura Arroyo
LAURA ARROYO
RUA No. 16653
Earthjustice
4500 Biscayne Blvd. Ste 201
Miami, FL 33137
T: (305) 440-5436
E: larroyo@earthjustice.org

s/ Mychal Ozaeta
MYCHAL OZAETA
Earthjustice
707 Wilshire Blvd., Ste 4300
Los Angeles, CA 90017
T: (213) 766-1069
E: mozaeta@earthjustice.org

Attachments:
Comments on the Liner Proposed for AES, Puerto Rico by Ranajit Sahu, PhD
AES Consent Agreement and Final Order, Docket No. CWA-02-2012-3452
EPA's Administrative Compliance Order ("ACO") in Docket No. CWA-02-2012-3100
Comité Diálogo Ambiental, March 22, 2021 email submission of Comments and Request for Denial of Construction Permit and Revocation of AES Permits

ED_006328A_00019664-00015

Message

From: Lisa Evans [levans@earthjustice.org]
Sent: 3/23/2021 2:42:20 PM
To: Huggins, Richard [Huggins.Richard@epa.gov]
CC: Jose Rivera [rstgo2@gmail.com]; larroyo@earthjustice.org; mozaeta@earthjustice.org
Subject: Fw: Comments and Request for Denial of Construction Permit and Revocation of AES Permits
Attachments: noname; Motion Requesting Revocation of AES Permits.pdf

Hi Richard,
Attached please find Comments and Request for Denial of Construction Permit and Revocation of AES Permits filed with the PR Department of Economic Development and Commerce, filed on March 22, 2021.

I have cc'd Ruth Santiago, attorney for Comité Diálogo Ambiental, Inc and Laura Arroyo and Michal Ozaeta of Earthjustice. We will be following up soon with the submission of a technical support document, which we will also send to you.

We hope soon to speak with EPA regarding this issue.

Sincerely,
Lisa

Lisa Evans
Senior Counsel
Earthjustice
21 Ocean Ave.
Marblehead, MA 01945
T: (781) 631-4119
C: Ex. 6 Personal Privacy (PP)
www.earthjustice.org

GOVERNMENT OF PUERTO RICO
DEPARTMENT OF ECONOMIC DEVELOPMENT AND COMMERCE
PERMITS MANAGEMENT OFFICE
OFICINA DE GERENCIA DE PERMISOS

IN RE: AES PUERTO RICO, L.P LINER CONSTRUCTION PROJECT	**CASE NO.:** 2020-304207-PCD-006243 (2021-SCE-013732); 2020-304207-PCM-008653; (2021-SCE-013731); 2020-304207-PCOC-013253 2020-304207-DEA-004713; 2020-304207-REA-004834

COMMENTS AND REQUEST FOR DENIAL OF CONSTRUCTION PERMIT AND REVOCATION OF AES PERMITS

TO THE PERMITS MANAGEMENT OFFICE:

COMES NOW, Comité Diálogo Ambiental, Inc., through the undersigned legal representation and submits comments and requests that the Permit Management Office deny the construction permit and revoke all permits and approvals for the AES Liner Construction Project.

INTRODUCTION

Comité Diálogo Ambiental, Inc., is a community environmental group composed of residents of the Municipality of Salinas and the Guayama Region, organized as a nonprofit corporation under the laws of the Commonwealth of Puerto Rico since 1997. The purposes of the organization are to promote the general welfare of the communities it serves through education and capacity building of residents concerning the adverse impacts of human activities on the ecologic balance of natural systems and the importance of restoring the environment and promoting conditions under which human beings and the environment can exist in harmony to fulfill economic, social, and other needs of present and future generations.

The AES Puerto Rico, L.P. ("AES") coal burning power plant in Guayama, Puerto Rico accumulates hundreds of thousands of tons of coal ash waste at its plant site. Evidence of environmental contamination by AES is documented in various groundwater monitoring reports prepared by AES's contractor, DNA Environmental, LLC as a requirement of the Federal Coal Combustion Residuals Rule ("CCR Rule"). The data from the DNA reports indicates that the groundwater in the downstream gradient wells of the coal combustion waste, called Agremax (especially the wells designated MW-3 and MW-4) is highly contaminated with coal ash waste

ED_006328A_00039074-00001

when compared to upstream wells (designated MW-1 and 2).[1] AES's polluting practices have already contaminated part of the South Coast Aquifer, the sole source of potable water for tens of thousands of people in Puerto Rico.

ARGUMENT

I. AES OBTAINED THE PERMITS FOR THE LINER CONSTRUCTION PROJECT BASED ON FRAUDULENT MISREPRESENTATIONS

As required by the CCR Rule, AES commissioned the Corrective Measures Assessment ("CMA") Report[2]. The Report attempts to present clean up alternatives for the aquifer contaminated with toxic AES coal ash, known as Agremax, that AES has accumulated in an immense pile for years and left in direct contact with the soil and exposed in the open at its plant in Guayama, Puerto Rico.

AES, has opted to excavate 4-6 feet of soil, replace it with clean fill material, install a liner and pipe storm water to a pond adjacent to the coal pile as the main components of the corrective measures. In furtherance of the corrective measures proposed, AES filed various documents with the Puerto Rico Permit Management Office ("PMO"), including an Environmental Assessment ("EA"). In the EA submitted by AES to obtain approvals and permits for the liner construction project, AES falsely alleges the AES-PR plant produces 454 Megawatts of energy[3]. In reality, AES currently has an installed capacity of 524 MW.[4] That is an extra 70 MW of generation capacity and the corresponding amount of additional coal ash waste than what AES reported to the Permit Management Office in its filings to the administrative agency.

Furthermore, the Environmental Assessment submitted by AES falsely alleges as follows:

> "The plant is classified as a zero liquid discharge process water plant. The AES-PR plant is considered zero discharge because it reuses its process waters and does not discharge process waters either to PRASA or to bodies of water."[5] (Translation provided)

Again, AES's allegations in the EA are false. In 2012, the Environmental Protection Agency ("EPA") imposed a fine of $170,000.00 against AES for discharging contaminants into the wetlands near the Guayama plant and for multiple violations of the Clean Water Act ("CWA"). The EPA issued an Administrative Compliance Order ("ACO") in Docket Number CWA-02-2012-3100 to address the years of illegal discharges by AES in violation of the CWA. Subsequently, and due to AES's continuous illegal discharges and violations of the CWA, EPA issued an Administrative Order on Consent with the following findings:

---

[1] https://aespuertorico.com/wp content/uploads/2020/02/190173_AES_2019_Groundwater_Monitoring_and_Corrective_Action_Report.pdf

[2] Corrective Measures Assessment ("CMA") Report, AES Puerto Rico - Agremax ™ Staging Area Guayama, Puerto Rico, https://aespuertorico.com/ccr/.

[3] EA, p.3

[4] Moción para Presentar Reporte de Estatus y Progreso Final y Solicitud de Relevo de Orden, p. 23, https://energia.pr.gov/wpcontent/uploads/sites/7/2021/02/Mocion-para-Presentar-Reporte-de-Estatus-y-ProgresoFinal-y-Solicitud-de-Relevo-de-Orden-NEPR-AP-2020-0001-1.pdf.

[5] EA, p.3

ED_006328A_00039074-00002

> Based on the findings of the CEI (NPDES Water Compliance Inspection Report (CEI Report), dated October 3, 2011) and further investigations, EPA found Respondent to be in violation of the CWA and the applicable NPDES regulations for its discharges of pollutants into waters of the United States without NPDES permit coverage and for its failure to apply for a NPDES permit. On December 16, 2011, EPA issued to Respondent (AES) an Administrative Compliance Order (ACO), Docket Number CWA-02-2012-3100, in an effort to bring Respondent into compliance with the CWA and its implementing NPDES regulations.[6]

In the 2015 Administrative Order on Consent Docket Number CWA-02-2015-3102, ("AOC"), EPA documents additional CWA violations by AES:

> Based upon an EPA Region 2 enforcement officer walkthrough of the Facility on January 28, 2015, and further review of Respondent's submittals, EPA found Respondent to be in non-compliance with the MSGP and ACO, as set forth below: a. failure to provide a Final Progress Report indicating and documenting the implementation of the non-structural BMPs and structural BMPs at the Facility, per the EPA May 5th, 2013 letter; b. Part 2.1.2.5 (Erosion and Sediment Controls) — lack of soil stabilization in areas near the coal pile, limestone dome, and coal pile runoff pond; c. Part 2.1.2.5 (Erosion and Sediment Controls) — lack of installation and/or replacement of the silt fence in the perimeter of the coal storage piles and coal handling areas; d. Part 2.1.2.12 (Dust Generation & Vehicle Tracking of Industrial Materials) — lack of a dust and fugitive emissions control plan for areas in which ashes are handled (e.g., AgremaxTm storage pile); e. Part 3.2 (Conditions Requiring Review to Determine if Modifications Are Necessary) — did not address the exceedances of the applicable benchmarks (e.g., aluminum and iron) for the period up to June 2014 concerning storm water discharges through outfalls 001 and 002; f. failure to prepare and submit the comprehensive site inspection reports pursuant to Part 4.3.2 of the MSGP for the December 13, 2012 and December 19, 2013 comprehensive site inspections; and g. Part 7.1 (Reporting Monitoring Data to EPA) — failure to submit MSGP discharge monitoring report forms (MDMR forms) all monitoring data collected since Respondent obtained MSGP coverage on September 29, 2013. [7]

Furthermore, EPA has documented AES violations to National Pollutant Discharge Elimination System ("NPDES") permit number PRR053093 since January 2018[8]. AES has failed to submit Discharge Monitoring Reports as required under the NPDES permit since at least January 2018. Additionally, AES has incurred in violations that include: "WW Storm Water Non-Construction - Discharge without a permit, WW Storm Water Non-Construction - Failure to Implement SWPPP/SWMP, WW Storm Water Non-Construction - Failure to properly install/implement BMPs, WW Storm Water Non-Construction - Failure to properly operate and maintain BMPs, and WW Storm Water Non-Construction - Failure to submit required report (non-DMR)"[9] since

---

[6] AES Puerto Rico, L.P. Administrative Order on Consent Docket Number CWA-02-2015-3102, ("AOC"), p. 8.
[7] AOC, pages 9-10.
[8] https://echo.epa.gov/detailed-facility-report?fid=110012141805#pane3110012141805.
[9] Id.

approximately November or December 2019. Therefore, it is clear that AES is not a "zero liquid discharge process water plant" and that AES knowingly submitted false information to the PMO both as to the water discharges and the generation capacity. Law 161-2009, as amended, presumes the accuracy of permits, but "when there is fraud, deceit, deception, extortion, bribery or the commission of any crime in granting or denying a final determination or permit, or in such cases in which the structure poses a risk to the health or safety, or to environmental or archaeological conditions, the final determination so issued and the permit granted by the Permit Management Office, by the Autonomous Municipality with I to V granted hierarchy or by the authorized professional, must be revoked[10]. All permits issued by PMO to AES should be revoked and pending permit applications should be denied.

II. AES'S PLAN DOES NOT MEET FEDERAL REQUIREMENTS AND LACKS PUBLIC HEALTH PROTECTION MEASURES

AES commissioned studies show that toxic CCR from its coal plant is polluting groundwater with lithium, selenium and molybdenum. The AES commissioned studies on groundwater quality conducted by DNA Environmental, confirmed that metals such as lithium, selenium and molybdenum have leached from AES coal ash waste pile into the aquifer, its toxic concentrations exceeding 4-11 times the safety levels.

The 2017 Annual Groundwater Monitoring Report for the AES Guayama plant site, required by the CCR Rule, indicates that the groundwater in downgradient wells, especially wells MW-3 and MW-4, is highly contaminated with coal ash pollutants. When compared with the upgradient wells (MW-1 and 2), the levels of coal ash contaminants in the downgradient wells are orders of magnitude higher, depending on the contaminant. The direction of groundwater flow is away from the coal ash waste pile and towards the sea and a coastal community visible from the satellite photograph in the Report. These elevated levels of pollutants indicate the AES coal ash waste pile is releasing hazardous chemicals to the groundwater, which are flowing offsite. These toxic metals cause neurological damage, gout, and liver and kidney disease in humans. In addition, selenium is highly toxic to fish and other aquatic species, and it bioaccumulates, meaning it can permanently destroy wildlife populations as it moves through the environment over a period of years.

An EPA study using the Leaching Environmental Assessment Framework ("LEAF") shows that aluminum, arsenic, boron, cadmium, chloride, chromium, fluoride, lead, lithium, molybdenum, selenium, sulfate, and thallium can leach from the AES coal ash waste at high levels and then contaminate the local environment around the sites at which coal ash has been disposed. [11]

Sample analyses commissioned by Earthjustice in July 2019 determined that the level of arsenic found in the coal ash deposited in Urb. Parque Gabriela and the Ranchos Guayama community, in Salinas, and the Dulces Sueños Connector, in Guayama, exceeds EPA standards and is considered harmful to human health --from 6 to 15 parts per million (ppm). These levels are 9 to 22 times

[10] Law 161-2009, as amended, Article 9.10, 23 L.P.R.A. § 9019i.

[11] A.C. Garrabrants, D.S. Kosson, R. DeLapp and Peter Kariher, Leaching Behavior of "AGREMAX" Collected from a Coal-Fired Power Plant in Puerto Rico, EPA 600/R-12/724 December 2012 | www.epa.gov/ord See also, Independent laboratory tests conducted by TestAmerica and background levels for these metals taken from ATSDR Study available at http://www.atsdr.cdc.gov/HAC/PHA/reports/isladevieques_02072003pr/tables.html#T2

higher than the level considered safe for arsenic in residential soils, and 2 to 5 times higher than the level considered safe for soil in industrial properties established by the EPA. These levels of contaminants raise questions regarding the status of all coal ash land fill sites in Puerto Rico where AES discharged its waste. These fills are not monitored; however, the same chemicals and dangerous metals can contaminate more groundwater.

The 2015 Coal Combustion Residuals Rule, mandates that companies that pollute groundwater above federal health standards must develop a strategy to prevent new emissions, ameliorate pollution, and restore the affected area to their original condition. 40 C.F.R. § 257.96 (a).

AES's selected remedy to allegedly comply with the CCR Rule-installation of a liner plus Monitored Natural Attenuation ("MNA") fails most of the criteria and objectives of the applicable regulation, 40 CFR 257.97(b) and (c) because it does not entail removal of the pollutants in the groundwater. This is cause for concern because the direction of the flow of groundwater is moving away from the AES pile of coal ash waste towards the coastal community and then to the bay.

AES's plan is flawed for several reasons. The plan does not meet CCR Rule requirements because of the deficiencies in the research commissioned by AES and the limitations of the proposed solutions. These are serious deficiencies and make the cleanup plan inadequate to remedy past and ongoing contamination of groundwater, air, and (potentially) surface waters with CCR from the AES plant. The law requires AES to submit a plan to the community that meets federal standards.

The measures proposed by AES do not prevent continued contamination from the CCR waste pile. The installation of a plastic liner to reduce future groundwater contamination, would provide, at best, only a temporary barrier to CCR contaminants. It does not meet the standards of federal law and would not be effective in the long run. The AES cleanup proposal will not stop ongoing contamination from CCRs. Contaminated runoff and toxic fugitive dust are not adequately addressed in the AES proposed measures.

AES does not propose long-term or truly effective solutions to avoid continuous toxic CCR contamination. AES's plan does not present an effective solution to prevent the continued spread of CCR via air, groundwater and/or surface runoff. Containment measures for CCR should include placement in secure storage silos with impermeable floors and walls, as well as engineering safeguards to contain CCR under severe wind and rain conditions in seismic-activity proof locations.

AES did not investigate or characterize the nature and extent of the spread of contaminants from the CCR waste pile using the Leaching Environmental Assessment Framework ("LEAF")[12], a battery of tests more suited to detecting the leaching potential of coal combustion residuals. The

[12] An EPA study using the Leaching Environmental Assessment Framework ("LEAF") shows that aluminum, arsenic, boron, cadmium, chloride, chromium, fluoride, lead, lithium, molybdenum, selenium, sulfate, and thallium can leach from the AES coal ash waste at high levels and then contaminate the local environment around the sites at which coal ash has been disposed. A.C. Garrabrants, D.S. Kosson, R. DeLapp and Peter Kariher, Leaching Behavior of "AGREMAX" Collected from a Coal-Fired Power Plant in Puerto Rico, EPA 600/R-12/724 December 2012 | www.epa.gov/ord.

Coal Combustion Residues Rule requires AES to characterize the nature and extent of CCR spread. 40 C.F.R. § 257.95 (g) (1) This is an essential first step to develop a cleanup plan.

The EA indicates that the project site is a flood prone area, with flood levels exceeding 3 meters. In addition, the EA documents the wetland area in the southwest area of the project site where AES proposes to continue to accumulate tens of thousands of tons of coal ash waste. Lithium variations above the drinking water detection level were detected in the extreme southwest of the property in the TW-C well, yet no explanation is provided for this data.[13]. Furthermore, AES failed to survey the large wetland area just south of the plant to determine if there were heavy metals from CCR contamination in its sediment, surface water, or its underlying groundwater. Contamination of the wetland areas is likely to negatively impact aquatic life, birds, and crustaceans. Since the area is a habitat for game birds caught for human consumption, this can have adverse impacts on both public health and the local economy. Furthermore, the EA does not address the impact of proposed excavation on the aquifer water table, wetlands, and a flood prone area.

AES did not investigate CCR contamination in discharge areas of Las Mareas Bay. Although AES admits that contaminated groundwater is discharged into the bay in the low tide zone[14], it did not sample the water near the port nor the sediments in the area. Instead, AES sampled much deeper waters in the bay.

AES cited an outdated survey on groundwater use in Las Mareas, a community neighboring the contaminated groundwater to the south. The survey used by AES dates back to 2002. To ensure that all households obtain water from a public drinking-water pipe or if there are existing private wells in the area, AES must carry out a new survey.

III. AES' PLAN WILL WORSEN FUGITIVE DUST POLLUTION

The AES coal ash waste pile grew to an accumulated amount of (at least) 487,000 tons of CCRs (2019), making it the largest CCR pile of any jurisdiction in the United States and its territories (about 40 times larger than that of Alaska containing 11,000 tons of ash). Fugitive dust from the CCR waste reaches nearby communities on a daily basis and contaminates the lungs of people who breathe the toxics contained in the ashes.

A July 2017 CCR Inspection Report for the AES coal ash waste pile at the AES plant site containing 430,000 tons of CCRs notes that, "localized rills were observed on the surface of stockpile slopes, they appeared to be related to over-watering by the water sprinkler . . . . The water truck was not operational at the time. Some fugitive dust caused by wind was observed on the west slope of the Stockpile at the time of inspection." Regarding the CCR pile, the Report describes that it had "increased to an estimated height of 120 feet," while its "slopes have become longer and steeper." (emphasis added).

[13] CMA, p.100-110, https://aespuertorico.com/ccr/

[14] Haley Aldrich, Corrective Action Evaluation Report, AES Puerto Rico - AGREMAX Concentration Area, Guayama, Puerto Rico, September 2019, amended on 8 November 2019, on page 130, https://aespuertorico.com/ccr/

ED_006328A_00039074-00006

AES's plan according to the EA and its engineering consultants, Winston Esteves and Steven Putrich (Haley Aldrich consultant), is to move half of the accumulated CCR on the Guayama site in order to place the first section of a plastic liner. The EA and the Report indicate that the liner placement would be done in two phases: phase 1 would consist of placing half of the CCR pile over the other half (located in an area identified for phase 2); the plastic liner would then be placed in the original phase 1 area, and finally the entire CCR pile accumulated in the phase 2 area would be placed over the liner located in the phase 1 area.[15]

The movement of the AES coal ash waste would inevitably create clouds of toxic ash particles and migrate to nearby and densely populated communities such as Miramar, Santa Ana, San Martín, Puerto de Jobos, Mosquito and San Felipe. Residents of these nearby communities have filed several complaints with the Department of Natural and Environmental Resources because of fugitive coal ash dust reaching their homes on normal days of operation of the plant. The correction measures that AES proposes would require excavation and moving tens of thousands of tons of coal ash waste and would inevitably mobilize more fugitive dust than during normal operations.

The Siting Location issued by the Puerto Rico Planning Board for the AES plant required AES to transport and dispose of the coal ash waste outside of Puerto Rico due to the anticipated serious health hazards associated with the heavy metals and constituents of concern.

In the permit application documents, AES does not address compliance with Puerto Rico Law 5-2020, known as "Law to Prohibit the Deposit and Disposal of Coal Ash or Coal Combustion Residues in Puerto Rico", which obliges the company to remove the ashes of its facilities within 180 days.

IV. AES HAS A LONG HISTORY OF NONCOMPLIANCE WITH ENVIRONMENTAL LAWS AND REGULATIONS

A letter from the EPA Region 2, Regional Administrator to the Puerto Rico Environmental Quality Board, dated November 11, 2011 indicates as follows:

> "We have inspected ten sites in the municipalities of Arroyo, Guayama, and Salinas, where Agremax has been placed on the land, including residential areas and areas close to wetlands and surface water. It is our observation, based on these inspections and subsequent investigation, that the land placement of Agremax may constitute disposal at several of the sites inspected. The volumes observed placed on the land in some cases appeared to far exceed those we would consider necessary for the appropriate engineering use of the construction material for which Agremax was allegedly being substituted. In addition, several of the Agremax land placement sites appeared to have been abandoned, in that, despite the presence of signs indicating construction permit issuance, the slated construction projects had not been initiated and no construction equipment or activity was noted, while several sites appeared overgrown and had been used for the illegal deposition of waste materials."

And further states as follows:

[15] Haley Report, p. 13 (section 4.3.1), https://aespuertorico.com/ccr/.

ED_006328A_00039074-00007

> "The locations at which some of the deposition of Agremax has taken place overlie shallow sole source drinking water aquifers, and are thus particularly sensitive to environmental harm. A 2007 EPA report documents known damage cases from the mismanagement of coal ash in unlined landfills and surface impoundments and the subsequent contamination of drinking water aquifers through the leaching and ground water transport of contaminants in the ash. Two EPA Orders, issued in 2003 and 2004 under the Comprehensive Environmental Response, Compensation, and Liability Act, and a subsequent 2004 citizen suit taken under Section 7002 of the Resource Conservation and Recovery Act, address aquifer contamination by the leaching of toxic constituents from an unlined coal ash landfill in Pines, Indiana. The EPA proposed rule states that: ". . .EPA recognizes that seven proven damage cases involving the large scale placement, akin to disposal, of [coal combustion residues] has occurred under the guise of "beneficial use". . ." and that ". . .therefore, today's proposed rule explicitly removes these types of uses from the category of beneficial use.. ." (75 F.R. 35 161). Id." (emphasis added).

As an example of one of the disposal locations identified, an EPA inspector found that an access road adjacent to Pfizer Guayama plant is "far more extensive (wider, higher) than appropriate for stated end use." Field Notes taken by L Grossman of EPA.

As noted above, AES has repeatedly violated the Clean Water Act. AES has also repeatedly failed to comply with the orders of the Environmental Quality Board, now Department of Natural and Environmental Resources ("EQB/DNER") (Ref. Nos. 17-14 and 17-21)[16], which obliged AES to cover the CCR waste pile at its facilities before the passage of hurricanes Irma and María to avoid fugitive dust and to safeguard the health and safety of the residents of the areas surrounding the plant. Prior to Hurricane Irma, EQB/DRNA ordered AES to contain and cover the coal combustion residuals and/or Agremax at its facilities to safeguard the health and safety of the residents (Resolution No. 17-14). AES refused to comply with the order and was fined $95,000.00. AES failed to comply with a second order issued by EQB, with the same requirements, as Hurricane Maria approached.

The Toxic Release Inventory ("TRI") published by the EPA reveals that the AES coal-fired plant is the largest polluting plant in Puerto Rico. According to TRI, since AES began operations, it has emitted 8,560,412.19 pounds of toxic substances and 63% of that pollution has been released into the air. Among the toxic substances released by AES daily into the air are arsenic, mercury, ammonia, barium, chromium, vanadium, and sulfuric acid.

EPA has also documented one informal enforcement action in the past 5 years, a Clean Air Act ("CAA") notice of violation dated 8/28/2020.[17]

---

[16] Puerto Rico Environmental Quality Board 96-9-1, 96-39-1, available at http://www.ac,remax.com/Downloads/R-00-96-2%20ENGLISH.pdf, and 00-14-2 available at http://www.agremax.com/Downloads/R-00-14-2%20ENGLISH.pdf R. 96-39-1 at 2.

[17] https://echo.epa.gov/detailed-facility-report?fid=110012141805#pane3110012141805

ED_006328A_00039074-00008

ENVIRONMENTAL JUSTICE

The Biden Administration's Executive Order, "Tackling the Climate Crisis at Home and Abroad" provides in part as follows:

> "To secure an equitable economic future, the United States must ensure that environmental and economic justice are key considerations in how we govern. That means investing and building a clean energy economy that creates well paying union jobs, turning disadvantaged communities — historically marginalized and overburdened — into healthy, thriving communities, and undertaking robust actions to mitigate climate change while preparing for the impacts of climate change across rural, urban, and Tribal areas."

The Guayama region is an environmental justice community with high poverty rates and percentages of residents of African descent and is the most contaminated region in Puerto Rico according to the Toxic Release Inventory as noted above. The Guayama region has among the highest unemployment and school dropout rates in Puerto Rico. The Guayama Region has experienced a sharp decrease in medical services available to this environmental justice community with the closure of two hospitals and only one hospital currently in operation. The AES disposal of CCRs in the Guayama region in proximity to the plant and the AES CCR waste pile imposes disproportionate public health risks to this environmental justice community.

PROCEDURAL INJUSTICE

AES did not post the EA or any of the related documents on its CCR website. The AES remedy selection process has been fraught with procedural law violations seriously obstructing public participation. The main purpose of the process was to provide information on the groundwater contaminated by AES coal ash waste and to prevent further pollution. The Corrective Measures Report ("CMR") was originally posted on the AES webpage in English only and it was not made available in Spanish until a few days prior to the public meeting held by AES. Furthermore, the Report is highly technical, and AES never published a draft suitable for the general public and for non-technical readers. Information on how to access the Report as well as regarding the public meeting was insufficient. While AES invests large sums of money in deceptive advertising campaigns and exerts undue influence on churches, sport clubs, social groups, among others, it does not include in its propaganda any reference to the process for clean-up of the water pollution caused by its coal ash waste and interferes with public participation in the legally mandated process.

AES commissioned the Haley & Aldrich Report that cites section §257.97 of title 40 of the Code of Federal Regulations ("CFR") which establishes the criteria for evaluating factors that must be considered by the operator of a CCR unit, including the degree to which community concerns are addressed by a potential solution. The same page of the Report states that the fourth balancing criterion involves the community's input regarding the proposed corrective alternatives.[18]

As indicated above, AES public notice was deficient: the community meeting held on December 12, 2020, did not comply with the requirement of promoting participation of the communities

[18] Haley & Aldrich Report, p. 3, https://aespuertorico.com/ccr/.

affected by the pollution caused by the coal plant, it did not present alternative corrective measures in detail and it did not address any community concerns.

The meeting was held in Olimpo neighborhood, located in the northeast area of Guayama, more than 10 km away from Puente de Jobos and Miramar, the most communities impacted by the operation of AES power plant and where the proposed corrective measure would be implemented.

In addition, the three access roads to the premises where the meeting took place were fenced and guarded by approximately 80 police officers. AES did not allow people from the communities to drive their cars into the premises' parking lots (access was restricted to the company's employees and directors); the company hired additional security guards and posted them at the entrance and inside the premises; metal detectors and a search area were placed at the main entrance, where people from organizations and communities entered the premises (this did not apply to company directors, who had access through all entrances). AES mobilized its employees to occupy spaces in the meeting. Residents across the street from the premises, in the Olimpo neighborhood, had no knowledge of the activity.

During the community meeting, AES used highly technical language, making it difficult for most people to understand the presentation. AES's experts called into question any approach or solution presented by the public; there was no discussion regarding the potential risks to the community and environment, including potential threats to human health and the environment associated with the excavation, transport, and removal of contaminants. Every one of these actions, denied the affected communities an opportunity for real participation.

CONCLUSION

For all the reasons stated above, Comité Diálogo Ambiental, Inc. requests as follows:

1. That the Permits Management Office deny the construction permit and revoke all permits and approvals for the AES liner construction project.
2. Total and complete removal of the AES coal ash waste pile (Agremax/CCRs) and clean-up of groundwater.
3. Monitoring and decontamination of all areas impacted by the AES toxic coal ash waste (Agremax/CCRs) as well as public health studies related to pollution from the AES operation.
4. Revocation of AES's Siting Consultation and denial of any permits requested by its affiliated companies, such as Fluence.

In Salinas, Puerto Rico, on March 22, 2021.

s/ Ruth Santiago
RUTH SANTIAGO
RUA Núm. 8589
Apartado 518
Salinas, Puerto Rico 00751
Tel. (787) 312-2223
rstgo@gmail.com

s/Laura Arroyo
LAURA ARROYO
RUA Núm. 16653
Earthjustice, 4500 Biscayne Blvd., Suite 201
Miami, FL 33137
Tel. (305) 440-5436
larroyo@earthjustice.org

ED_006328A_00039074-00010

Message

From: Christine Santillana [csantillana@earthjustice.org]
Sent: 7/9/2021 9:59:45 PM
To: Huggins, Richard [Huggins.Richard@epa.gov]
CC: levans@earthjustice.org
Subject: Ruth Santiago Testimony (HNR Hearing on AES Coal Plant in PR)
Attachments: Ruth Santiago Testimony AES Congressional Hearing 062821.pdf

Hi Richard,

I hope this email finds you well.

I work closely with Lisa (cc'd here) on the federal coal ash rules and have also been working with communities in Puerto Rico who are seeking the immediate closure of the AES plant in Guayama.

I wanted to make sure you received Ruth Santiago's testimony from the House Natural Resource's Subcommittee hearing on June 30, which highlighted the tremendous harms caused by AES' mismanagement of its coal ash and the need to close the plant.

Have a good weekend, and I look forward to meeting with you on Monday.

Best,

CHRISTINE SANTILLANA (she/her/hers)
Legislative Counsel
EARTHJUSTICE
1001 G St., NW, Floor 10
Washington, DC 20001
T: 202.797.4315
E: csantillana@earthjustice.org

June 28, 2021

Chair Katie Porter
Subcommittee on Oversight and Investigation
House Committee on Natural Resources
Congress of the United States
Washington, DC 20515

Mr. Vic Edgerton
Staff Director,
Subcommittee on Oversight and Investigations
Committee on Natural Resources
Vic.Edgerton@mail.house.gov

Ms. Julia Parris,
julia.parris@mail.house.gov

Written Testimony for Hearing to Examine the Impacts and Retirement of the Coal-Fired Power Plant in Guayama, Puerto Rico

Dear Chair Porter and Members of the House Subcommittee on Oversight and Investigation,

On behalf of the groups listed in the attachment to this letter, we appreciate the opportunity provided by the House Subcommittee on Oversight and Investigation of the Committee on Natural Resources, to testify and submit written comments on the impacts and the retirement of the AES Puerto Rico, L.P. ("AES") coal-fired power plant in Guayama, Puerto Rico. As further explained below, the groups that are joining this testimony have substantial concerns with both the impacts and the details surrounding the alleged retirement of the AES power plant in Guayama, Puerto Rico. Specifically, the groups request that the pertinent Federal and Puerto Rico agencies implement the following measures:

1. Revoke all AES permits, including but not limited to permits issued under the Clean Water Act ("CWA"), National Pollutant Discharge Elimination System ("NPDES"), Clean Air Act ("CAA"), Resource Conservation and Recovery Act ("RCRA"), Coal Combustion Residuals Rule ("CCR Rule"), AES' Siting Permit, among others and denial of any new permits.
2. Order the immediate and permanent shutdown of the AES Guayama plant.
3. Order the total and complete removal of the AES coal ash waste pile ("Agremax"/ "CCRs") and the clean-up of groundwater, the South Coast Aquifer and Las Mareas-Jobos Bay.
4. Mandate the investigation, monitoring and decontamination of all areas impacted by the AES toxic coal ash waste, as well as mandate public health studies related to pollution from the AES operation, medical monitoring, treatment, and other types of reparations to persons and communities harmed by the AES operation.
5. Require cleanup of the recent spill of AES coal ash waste off the coast of Atlantic Beach, near Jacksonville, Florida.

ED_006328A_00039136-00001

In addition to the closure of the AES coal-fired plant and the other requests, we urge this Committee, the Federal government, and the Puerto Rican government to require the Puerto Rico Electric Power Authority ("PREPA") to invest the Federal Emergency Management Agency ("FEMA") funds allocated for the electric system for on-site/rooftop solar and battery systems and energy efficiency programs that will provide life-saving electric service to the residents of Puerto Rico. Multiple studies have shown the viability, reliability and economic benefits of rooftop solar and storage in Puerto Rico.[1]

On January 29, 2021, PREPA filed a report with the Puerto Rico Energy Bureau that provides a breakdown on electricity generation as of that date. The report, titled Emergency Management KPI Dashboard, reflects that electricity generation was at 1960 MW, compared to the maximum capacity of the generating units in service of 3,361 MW with installed capacity of the units at 4596 MW, this includes the AES plant. Moreover, PREPA has additional units that could be put into service with an extra maximum capacity of 935 MW and with an installed capacity of 1,722 MW.[2]

A simple mathematical exercise shows that PREPA has excess generating capacity of at least 1401 MW, not counting the 935 MW of the units that were not in service but are functional. AES generation was at 448 MW of a maximum capacity of 514 MW, which illustrates that, if the AES plant closes, PREPA still would have excess generation of 953 MW, well above the necessary reserve, without counting other units that could enter service and provide another 935 MW. In short, if AES closes, Puerto Rico has more than enough electricity generation to meet the demand. Although demand is higher in the summer months, currently estimated at about 2200 MW, PREPA still has excess generation capacity and sufficient reserves.

Puerto Rico is at a crossroads with respect to its electric system. One of the main issues confronting the territory is whether to double down on rebuilding Puerto Rico's inadequate 20th century infrastructure or to embark on the creation and construction of a 21st century electric system, based on laws that require the Puerto Rican government to shift to renewable energy and enable Puerto Rico residents to participate in this essential public service. The Queremos Sol proposal ("We Want Sun," queremossolpr.com), endorsed by the groups joining in this testimony vigorously promotes the transformation of the Puerto Rico electric system as a public service including PREPA governance and the technology that empowers citizen participation as "prosumers" — producers and consumers of energy to achieve resiliency to the more frequent and intense hurricanes brought on by the climate crisis. PREPA's Transmission and Distribution

---

[1] Puerto Rico Low-to-Moderate Income Rooftop PV and Solar Savings Potential, National Renewable Energy Laboratory (NREL), 2020, Puerto Rico Low-to-Moderate Income Rooftop PV and Solar Savings Potential (nrel.gov); We Want Sun and We Want More (Summary), Fact Sheet, Puerto Rico Distributed Energy Resource Integration Study: Archieving a Renewable, Reliable, and Resilient Distributed Grid - Telos Energy, Puerto Rico Distribution Modeling - EE Plus, Puerto Rico Distributed Energy Resource Integration Study: Load, Energy Efficiency, and System Cost - Energy Futures Group, Sol + Techos – Página principal (cambiopr.org); Achievable Renewable Energy Targets ("ARET"), https://www.uprm.edu/aret/docs/Ch_4_Solar_resource_and_solar_thermal.pdf).

[2] See, Motion to Present Status and Final Progress Report and Request for Release of Order, page 23; Mocion-para-Presentar-Reporte-de-Estatus-y-Progreso-Final-y-Solicitud-de-Relevo-de-Orden-NEPR-AP-2020-0001-1.pdf

ED_006328A_00039136-00002

System Operation and Maintenance Agreement with Luma Energy, LLC would perpetuate the operation of the AES coal-fired plant in Guayama, Puerto Rico.

A true understanding of three points: price, reliability, and resiliency leads to the conclusion that AES can be retired without any adverse impact to ratepayers, grid reliability, or resiliency.
Price: Multiple studies, cited in this testimony have shown the economic viability and benefits of rooftop solar and storage in Puerto Rico. PREPA relies on an incorrect assumption that AES is in compliance with all local and federal environmental requirements: that is incorrect. AES's externalities are imposing costs on environmental justice communities in Puerto Rico and in the states and general societal and environmental burdens.
Reliability: PREPA's most recent dashboard of its system showed generation capacity, enough to meet peak load with the necessary reserve margin. The recent studies cited in this testimony demonstrate that a grid powered by rooftop solar and storage is more resilient, reliable and affordable than one powered by large, centralized fossil fuel plants.
Resiliency: AES depends on vulnerable long-distance transmission to provide power to northern Puerto Rico, especially the San Juan metropolitan area. Electrons from the AES plant did not reach San Juan for months after Hurricane Maria: this demonstrates the vulnerability of AES to hurricanes and multiple other natural events.

Basis of the Community, Environmental and Civil Society Demands

I. AES Has a Long History of Noncompliance with Environmental Laws and Regulations

The AES Puerto Rico, L.P. ("AES") coal-fired power plant in Guayama, Puerto Rico has accumulated hundreds of thousands of tons of coal ash waste at its plant site. Evidence of environmental contamination by AES is documented in various groundwater monitoring reports prepared by AES's contractor, DNA Environmental, LLC., as a requirement of the Federal Coal Combustion Residuals Rule ("CCR Rule"). The data from the DNA report indicate that the groundwater in the downgradient wells of the pile where the coal combustion waste, called Agremax™ is stored, (especially the wells designated MW-3 and MW-4) is highly contaminated with coal ash waste when compared to upgradient wells (designated MW-1 and 2).[3] AES's polluting practices have already contaminated part of the South Coast Aquifer, the sole source of potable water for tens of thousands of people in Puerto Rico. This contamination continues to occur at the AES plant site despite the mandate of the CCR Rule that requires AES to eliminate the source of the contamination and restore the groundwater to its original condition. To date, AES has failed to implement a cleanup at the site, and its proposed cleanup plan is not compliant with the CCR Rule.

In addition to contaminating groundwater at and around the AES plant site in Guayama, approximately 2 million tons of AES coal ash has been used as "fill" at dozens of locations mostly in southeastern Puerto Rico. Following complaints of illegal coal ash dumping, U.S.

[3] *See* DNA-Environment, LLC, 2019 CCR Annual Groundwater Monitoring and Corrective Action Report AES Puerto Rico LP, Guayama, Puerto Rico, January 31, 2020, https://www.aes.com/sites/default/files/2021-02/190173_AES_2019_Groundwater_Monitoring_and_Corrective_Action_Report%20(1)_0.pdf (last visited April 12, 2021). [Hereinafter, "DNA-Environment 2019 CCR Report"].

Environmental Protection Agency ("EPA") Region 2 personnel examined numerous coal ash dump sites in 2011. A letter from the EPA Region 2 Regional Administrator to the Puerto Rico Environmental Quality Board, dated November 11, 2011, indicates as follows:

> We have inspected ten sites in the municipalities of Arroyo, Guayama, and Salinas, where Agremax has been placed on the land, including residential areas and areas close to wetlands and surface water. It is our observation, based on these inspections and subsequent investigation, that the land placement of Agremax may constitute disposal at several of the sites inspected. The volumes observed placed on the land in some cases appeared to far exceed those we would consider necessary for the appropriate engineering use of the construction material for which Agremax was allegedly being substituted. In addition, several of the Agremax land placement sites appeared to have been abandoned, in that, despite the presence of signs indicating construction permit issuance, the slated construction projects had not been initiated and no construction equipment or activity was noted, while several sites appeared overgrown and had been used for the illegal deposition of waste materials.

The letter further states as follows:

> The locations at which some of the deposition of Agremax has taken place overlie shallow sole source drinking water aquifers and are thus particularly sensitive to environmental harm. A 2007 EPA report documents known damage cases from the mismanagement of coal ash in unlined landfills and surface impoundments and the subsequent contamination of drinking water aquifers through the leaching and ground water transport of contaminants in the ash. Two EPA Orders, issued in 2003 and 2004 under the Comprehensive Environmental Response, Compensation, and Liability Act, and a subsequent 2004 citizen suit taken under Section 7002 of the Resource Conservation and Recovery Act, address aquifer contamination by the leaching of toxic constituents from an unlined coal ash landfill in Pines, Indiana. The EPA proposed rule states that: ". . .EPA recognizes that seven proven damage cases involving the large scale placement, akin to disposal, of [coal combustion residues] has occurred under the guise of "beneficial use". . ." and that ". . .therefore, today's proposed rule explicitly removes these types of uses from the category of beneficial use.. ." (75 F. R. 35, 161). *Id.*

As an example of one of the disposal locations identified, an EPA inspector found that an access road adjacent to the Pfizer Guayama plant is "far more extensive (wider, higher) than appropriate for stated end use." Field Notes taken by L. Grossman of EPA.

AES has repeatedly violated the Clean Water Act. AES has also repeatedly failed to comply with the orders of the Environmental Quality Board, now Department of Natural and Environmental Resources ("EQB/DNER") (Ref. Nos. 17-14 and 17-21),[4] which required AES to cover the CCR waste pile at its facilities before the passage of Hurricanes Irma and María to avoid

[4] Puerto Rico Environmental Quality Board 96-9-1, 96-39-1, available at http://www.ac,remax.com/Downloads/R-00-96-2%20ENGLISH.pdf, and 00-14-2 available at http://www.agremax.com/Downloads/R-00-14-2%20ENGLISH.pdf R. 96-39-1 at 2.

ED_006328A_00039136-00004

fugitive dust and to safeguard the health and safety of the residents of the areas surrounding the plant. Prior to Hurricane Irma, EQB/DRNA ordered AES to contain and cover the coal combustion residuals and/or Agremax™ at its facilities to safeguard the health and safety of the residents (Resolution No. 17-14). AES refused to comply with the order and was fined $95,000.00. AES failed to comply with a second order issued by EQB, with the same requirements, as Hurricane Maria approached.

The Toxic Release Inventory ("TRI") published by the EPA reveals that the AES coal-fired plant is the largest polluting plant in Puerto Rico. According to TRI, since AES began operations, it has emitted 8,560,412.19 pounds of toxic substances and 63 percent of that pollution has been released into the air. Among the toxic substances released by AES daily into the air are arsenic, mercury, ammonia, barium, chromium, vanadium, and sulfuric acid.

EPA has also documented an informal enforcement action in the past 5 years, a Clean Air Act ("CAA") notice of violation dated 8/28/2020.[5]

AES has shipped hundreds of thousands of tons of its coal ash waste to Florida and most recently, a ship full of the coal combustion residuals capsized and spilled most of its cargo into the ocean, in the vicinity of Atlantic Beach, near Jacksonville.[6]

The AES Indiana Petersburg coal-fired power plant is one of four super polluter[7] coal plants located in Southwest Indiana. AES incurred in repeated violations of its air and water permits.[8]

AES has also been sued and has settled cases involving coal ash contamination and personal injuries to residents of the Dominican Republic.[9]

II. Environmental Justice

In addition to Executive Order 12,898, the Biden Administration's Executive Order, "Tackling the Climate Crisis at Home and Abroad" provides a further foundation for environmental justice claims and states in part as follows:

> To secure an equitable economic future, the United States must ensure that environmental and economic justice are key considerations in how we govern. That means investing and building a clean energy economy that creates well- paying union jobs, turning

---

[5] EPA, AES Puerto Rico L.P. Detailed Facility Report https://echo.epa.gov/detailed-facility-report?fid=110012141805#pane3110012141805, *supra*.

[6] This Barge Capsized and Leaked a Massive Stream of Toxic Coal Ash Near Florida https://www.vice.com/en/article/epnagz/coal-ash-florida-barge-capsize-aes-puerto-rico?ct=t(RSS_EMAIL_CAMPAIGN)

[7] Super Polluter

[8] AES Petersburg was identified by Indiana's newspaper of record as the worst water polluter in the state: https://www.indystar.com/story/news/environment/2020/06/08/ipl-petersburg-plant-faces-fine-more-than-100-permit-violations-idem-water-pollution/5261937002/
https://www.indystar.com/story/news/environment/2020/08/31/ipl-pay-millions-settlement-over-alleged-clean-air-act-violations/3447504001/

[9] https://periodismoinvestigativo.com/2018/12/arroyo-barril-coal-ash-and-death-remain-15-years-later/

ED_006328A_00039136-00005

disadvantaged communities — historically marginalized and overburdened — into healthy, thriving communities, and undertaking robust actions to mitigate climate change while preparing for the impacts of climate change across rural, urban, and Tribal areas.[10]

The Guayama region is an environmental justice community with high poverty rates and where the majority of residents are Afro-Puerto Ricans. Many residents in this region are descendants of enslaved Africans brought by the Spanish to toil in the region's sugar cane plantations. According to the Toxic Release Inventory this region suffers the greatest contamination of any region in Puerto Rico. The Guayama region also has among the highest unemployment and school dropout rates in Puerto Rico. The region has experienced a sharp decrease in medical services available to this environmental justice community with the closure of two hospitals and only one hospital currently in operation.

In 2016 and 2018, a team from the Program in Biostatistics and Epidemiology of the Graduate School of Public Health in the Medical Sciences Campus of the University of Puerto Rico completed epidemiological studies that focused on the communities of Puente de Jobos and Miramar de Guayama, closest to the AES coal plant, as well as in comparable communities in the municipality of Fajardo[11].

The purpose of the study was to determine if the prevalence of respiratory and skin diseases was higher in the Guayama communities, compared to the Fajardo communities. Information was collected on sociodemographic characteristics, housing, vulnerability factors to environmental pollution, perception of environmental pollution, reproductive and respiratory health, skin and cardiovascular diseases, and cancer.

The most relevant findings of the epidemiological study carried out are the following:

- 1 in 3 people in Guayama has been diagnosed with respiratory disease.
- 1 in every 4 inhabitants of Guayama has been diagnosed with cardiovascular disease.
- Pediatric asthma is approximately 5 times higher in Guayama;
- Severe asthma in boys and girls is 6 times higher in Guayama;
- The prevalence of urticaria is 7 times higher in Guayama;
- The prevalence of spontaneous abortions is more than 6 times higher in Guayama;
- The probability of suffering from chronic bronchitis in the population over 45 years of age is 9 times higher in Guayama;
- The probability of suffering from pediatric asthma is approximately 6 times higher in Guayama.

---

[10] See Biden Administration, Executive Order on Tackling the Climate Crisis at Home and Abroad, January 27, 2021, Section 219, https://www.whitehouse.gov/briefing-room/presidential-actions/2021/01/27/executive-order-on-tackling-the-climate-crisis-at-home-and-abroad/

[11] See, University of Puerto Rico, Medical Sciences Campus, Graduate School of Public Health - Department of Biostatistics and Epidemiology, Epidemiological Study in the Communities of Puente de Jobos and Miramar in Guayama and Santa Isidra and Rafael Bermúdez in Fajardo.

ED_006328A_00039136-00006

The AES disposal of CCRs in the Guayama region in proximity to the plant and the AES CCR waste pile and operation of the plant imposes disproportionate public health risks to this environmental justice community. Scholars have documented the environmental and social injustices perpetrated by AES in the region.[12]

AES transports its coal ash to the Chesser Island Landfill in Folkston, GA, another environmental justice community. Folkston has a poverty rate of 41.7 percent, which is nearly four times the national average. Approximately 53.2 percent of the population is black or Hispanic, which is more than the state average of 44.1 percent nonwhite residents.[13] Coal ash dumping clearly places a disproportionate burden on environmental justice communities in both Puerto Rico and Georgia. How can these burdens be justified by continued operation of the AES-PR plant?

III. AES Obtained Permits Based on Fraudulent Misrepresentations

As required by the CCR Rule, AES commissioned the Corrective Measures Assessment ("CMA") Report.[14] The Report lists clean up alternatives for the aquifer contaminated with toxic AES coal ash, known as Agremax™, which AES has accumulated for years in an immense, exposed pile and left in direct contact with the soil, wind, and rain in the open air at its plant in Guayama, Puerto Rico.

AES opted to implement "Monitored Natural Attenuation" ("MNA") and to excavate 4-6 feet of contaminated soil, replace it with clean fill material, install a liner, and pipe storm water to a pond adjacent to the coal pile as the main components of the corrective measures. In furtherance of the corrective measures proposed, AES filed various documents with the Puerto Rico Permits Management Office ("PMO"), including an Environmental Assessment ("EA"). In the EA submitted by AES to obtain approvals and permits for the liner construction project, AES falsely alleges the AES-PR plant produces 454 Megawatts of energy.[15] In reality, AES currently has an

---

[12] Lloréns, Hilda. "In Puerto Rico, Environmental Injustice and Racism Inflame Protests over Coal Ash." *The Conversation,* December 8, 2016. http://theconversation.com/in-puerto-rico-environmental-injustice-and-racism-inflame-protests-over-coal-ash-69763.

Lloréns, Hilda. "Puerto Rico's Coal-Ash Material Publics and the Summer 2019 Boricua Uprising." In "Puerto Rico, Protests and Politics," Special issue, *Society and Space,* February 25, 2020. https://www.societyandspace.org/articles/puerto-ricos-coal-ash-material-publics-and-the-summer-2019-boricua-uprising.

De Onis, Catalina, Energy Islands, Metaphors of Power, Extractivism, and Justice in Puerto Rico, 2021, https://www.ucpress.edu/book/9780520380622/energy-islands

[13] https://datausa.io/profile/geo/folkston-ga#demographics

[14] Haley & Aldrich, Inc., Report on Corrective Measures Assessment ("CMA") AES Puerto Rico - Agremax ™ Staging Area Guayama, Puerto Rico, (September 2019, amended November 8, 2019), *available at* https://www.aes.com/sites/default/files/2021-02/Corrective-Measures-Assessment-English.pdf (last visited April 12, 2021). [Hereinafter, "Haley & Aldrich Report"].

[15] Caribbean Architects & Engineers and AES Puerto Rico, Evaluación Ambiental Agremax™ Staging Area Liner Project AES Puerto Rico L.P. Guayama, PR ("EA"), p. 3, October 2020. [Hereinafter. "EA"].

ED_006328A_00039136-00007

installed capacity of 524 MW.[16] That is an extra 70 MW of generation capacity, with the corresponding amount of additional coal ash waste, than what AES reported to the PMO in its filings to the administrative agency.

Furthermore, the Environmental Assessment submitted by AES falsely alleges as follows:

> The plant is classified as a zero liquid discharge process water plant. The AES-PR plant is considered zero discharge because it reuses its process waters and does not discharge process waters either to PRASA or to bodies of water.[17] (Translation provided)

Again, AES' allegations in the EA are false. In 2012, the EPA imposed a fine of $170,000.00 against AES for discharging contaminants into the wetlands near the Guayama plant and for multiple violations of the Clean Water Act ("CWA"). The AES Consent Agreement and Final Order, Docket No. CWA-02-2012-3452 establishes as a finding of fact that AES, "discharged process wastewater from an overflow of the cooling tower basin through outfall serial number 003 into the wetlands" and "industrial wastewater and/or stormwater associated with industrial activity through outfall serial number 003 into a water of the United States without a National Pollutant Discharge Elimination System ("NPDES") permit, in violation of section 301 (a) of the CWA" in addition to illegal discharges of stormwater.[18] The EPA issued an Administrative Compliance Order ("ACO") in Docket No. CWA-02-2012-3100 to address the years of illegal discharges by AES in violation of the CWA. Subsequently, and due to AES' continuous illegal discharges and violations of the CWA, EPA issued an Administrative Order on Consent with the following findings:

> Based on the findings of the CEI (NPDES Water Compliance Inspection Report (CEI Report), dated October 3, 2011) and further investigations, EPA found Respondent to be in violation of the CWA and the applicable NPDES regulations for its discharges of pollutants into waters of the United States without NPDES permit coverage and for its failure to apply for a NPDES permit. On December 16, 2011, EPA issued to Respondent (AES) an Administrative Compliance Order (ACO), Docket Number CWA-02-2012-3100, in an effort to bring Respondent into compliance with the CWA and its implementing NPDES regulations.[19]

In the 2015 Administrative Order on Consent Docket No. CWA-02-2015-3102, ("AOC"), EPA documents additional CWA violations by AES:

---

[16] *Moción para Presentar Reporte de Estatus y Progreso Final y Solicitud de Relevo de Orden*, Docket No. NEPR-AP-2020-0001, January 29, 2021, p. 23, https://energia.pr.gov/wp-content/uploads/sites/7/2021/02/Mocion-para-Presentar-Reporte-de-Estatus-y-Progreso-Final-y-Solicitud-de-Relevo-de-Orden-NEPR-AP-2020-0001-1.pdf (last visited April 12, 2021).

[17] EA, *supra*, p.3.

[18] *AES Consent Agreement and Final Order*, Docket No. CWA-02-2012-3452, March 27, 2012, pp. 3, 5 and 6, https://yosemite.epa.gov/OA/RHC/EPAAdmin.nsf/Filings/0B584DB6CF2B0B89852579CF001B82E0/$File/AES123452.CAFO.pdf (last visited April 12, 2021).

[19] *AES Puerto Rico, L.P. Administrative Order on Consent*, p. 8. Docket No. CWA-02-2015-3102, ("AOC")..

ED_006328A_00039136-00008

Based upon an EPA Region 2 enforcement officer walkthrough of the Facility on January 28, 2015, and further review of Respondent's submittals, EPA found Respondent to be in non-compliance with the MSGP and ACO, as set forth below: a. failure to provide a Final Progress Report indicating and documenting the implementation of the non-structural BMPs and structural BMPs at the Facility, per the EPA May 5th, 2013 letter; b. Part 2.1.2.5 (Erosion and Sediment Controls) — lack of soil stabilization in areas near the coal pile, limestone dome, and coal pile runoff pond; c. Part 2.1.2.5 (Erosion and Sediment Controls) — lack of installation and/or replacement of the silt fence in the perimeter of the coal storage piles and coal handling areas; d. Part 2.1.2.12 (Dust Generation & Vehicle Tracking of Industrial Materials) — lack of a dust and fugitive emissions control plan for areas in which ashes are handled (e.g., Agremax™ storage pile); e. Part 3.2 (Conditions Requiring Review to Determine if Modifications Are Necessary) — did not address the exceedances of the applicable benchmarks (e.g., aluminum and iron) for the period up to June 2014 concerning storm water discharges through outfalls 001 and 002; f. failure to prepare and submit the comprehensive site inspection reports pursuant to Part 4.3.2 of the MSGP for the December 13, 2012 and December 19, 2013 comprehensive site inspections; and g. Part 7.1 (Reporting Monitoring Data to EPA) — failure to submit MSGP discharge monitoring report forms (MDMR forms) all monitoring data collected since Respondent obtained MSGP coverage on September 29, 2013.[20]

Furthermore, EPA has documented AES violations to NPDES permit number PRR053093 since January 2018.[21] AES has failed to submit Discharge Monitoring Reports as required under the NPDES permit since at least January 2018. Additionally, AES has incurred in violations that include: "WW Storm Water Non-Construction - Discharge without a permit, WW Storm Water Non-Construction - Failure to Implement SWPPP/SWMP, WW Storm Water Non-Construction - Failure to properly install/implement BMPs, WW Storm Water Non-Construction - Failure to properly operate and maintain BMPs, and WW Storm Water Non-Construction - Failure to submit required report (non-DMR)"[22] since approximately November or December 2019.

Therefore, it is clear that AES is not a "zero liquid discharge process water plant" and that AES knowingly submitted false information to the PMO both as to the water discharges and the generation capacity. Puerto Rico Law 161-2009, as amended, presumes the accuracy of permits, but "when there is fraud, deceit, deception, extortion, bribery or the commission of any crime in granting or denying a final determination or permit, or in such cases in which the structure poses a risk to the health or safety, or to environmental or archaeological conditions, the final determination so issued and the permit granted by the Permit Management Office, by the Autonomous Municipality with I to V granted hierarchy or by the authorized professional, must

[20] AOC, pages 9-10.

[21] *See* EPA, AES Puerto Rico L.P. Detailed Facility Report, *available at* https://echo.epa.gov/detailed-facility-report?fid=110012141805#pane3110012141805 (last visited April 12, 2021).

[22] *Id.*

ED_006328A_00039136-00009

be revoked..."[23] All permits issued by PMO to AES should be revoked and pending permit applications should be denied.

IV. AES's Plan Does Not Meet Federal Requirements and Lacks Public Health Protection Measures

AES has admitted that the source of the groundwater pollution at the Guayama plant site is its massive coal ash waste pile. Pursuant to the CCR Rule, AES is required to control the source of the contamination and clean up the groundwater.[24] Instead of removing or containing the coal ash pile to prevent releases to air and water, AES's cleanup plan consists of "Monitored Natural Attenuation" and constructing a liner beneath the existing pile. Merely monitoring the pollution in the groundwater does not constitute cleanup. In addition, expert analysis of the AES liner construction project, concludes that the AES filings raise numerous questions relating to the liner components and their compatibility with the wastes that will be accumulated on the liner.[25] In addition, the expert noted,

> Additional questions remain relating to the preparation of the sub-surface before placement of the liner including the extent to which previously contaminated soils will remain in place or how it will be verified that all contaminated soils are removed, especially given the very shallow depth to groundwater in the area. As noted, construction of the liner so close to groundwater cannot protect against contaminant migration and achieve adequate source control. And, lastly, no construction details, which are essential to ensuring that the liner will be effective, are provided.[26]

The groundwater level according to AES's documents is 3 feet below the liner.[27] AES proposes to excavate 4-6 feet and replace the excavated contaminated soil or materials with clean fill, then place the liner and use the site to again pile its coal ash. AES's plan would violate the location requirements of the federal CCR Rule (40 CFR Part 257, subpart D). As noted in the attached Sahu Report:

> Pursuant to 40 C.F.R. § 257.60(a), waste piles must be constructed with a base that is located no less than 1.52 meters (five feet) above the upper limit of the uppermost aquifer. Clearly, by AES' own admission, the liner does not meet this standard. AES has also failed to demonstrate that there will not be an intermittent, recurring, or sustained hydraulic connection between any portion of the base of the CCR unit and the uppermost aquifer due

---

[23] Law 161-2009, as amended, Article 9.10, 23 L.P.R.A. § 9019i.
[24] 40 C.F.R. §§ 257.90-98.
[25] See Comments on the Liner Proposed for AES, Puerto Rico by Ranajit Sahu, PhD attached as Exhibit 1.
[26] *Id.*
[27] Note that this high level of groundwater was not previously disclosed by AES and, in fact, AES' 2019 Corrective Measures Assessment indicates a groundwater level greater than 10 feet below the ground surface. *See* Haley & Aldrich Report.

ED_006328A_00039136-00010

to normal fluctuations in groundwater elevations (including the seasonal high-water table), as required by the regulation.[28]

Furthermore, AES proposes to use the CCR waste known as Agremax™, as part of the liner system. Using the Agremax™ as a project component defeats the purpose of the liner that is meant to establish a barrier between the CCRs and the groundwater.

In addition, there are inconsistencies and omissions concerning the testing of the CCR waste to be placed on top of the liner. Specifically, as explained in the Sahu Report, AES indicates that the concentrations of various metals are "zero." In fact, the reported concentrations for almost all of the metals such as arsenic, cadmium, copper, iron, mercury, nickel, and lead are shown as zero, meaning less than 0.02 ppm or 0.005 ppm depending on the metal. This is not credible and indicates that the analyses are likely flawed and therefore unreliable. It is concerning that this characterization of the wastes was used/might have been used for liner compatibility analysis.

In addition, the Sahu Report also notes that, "the reported levels of calcium, magnesium, and potassium from the 2018 tests are quite different and much higher than the levels reported in the liner compatibility studies" and that, "high levels of these constituents can adversely affect the clay in the GCL [liner]."[29] In fact, AES did not consider the constituents of concern in the liner compatibility tests. Therefore, the record is barren of any data that might indicate whether the proposed liner would be an effective barrier against leaching from Agremax™.

AES's commissioned studies show that toxic CCR from its coal plant is polluting groundwater with lithium, selenium and molybdenum. The AES' commissioned studies on groundwater quality, conducted by DNA Environmental, confirmed that metals such as lithium, selenium and molybdenum have leached from the AES coal ash waste pile into the aquifer, its toxic concentrations exceeding 4-11 times the safety levels.[30]

The 2017 Annual Groundwater Monitoring Report for the AES Guayama plant site, and subsequent reports required by the CCR Rule, indicate that the groundwater in downgradient wells, especially wells MW-3 and MW-4, is highly contaminated with coal ash pollutants.[31] When compared with the upgradient wells (MW-1 and 2), the levels of coal ash contaminants in the downgradient wells are orders of magnitude higher, depending on the contaminant. The direction of groundwater flow is away from the coal ash waste pile and towards the sea and a coastal community visible from the satellite photograph in the 2017 Report. These elevated levels of pollutants indicate the AES coal ash waste pile is releasing hazardous chemicals to the groundwater, which are flowing offsite. These toxic metals cause neurological damage, gout, and liver and kidney disease in humans. In addition, selenium is highly toxic to fish and other aquatic species, and it bioaccumulates, meaning it can permanently destroy wildlife populations as it

---

[28] *Id.*

[29] *Id.*

[30] AES Puerto Rico, CCR RULE Compliance Data and Information, Groundwater Monitoring and Corrective Action Reports 2017-2020, *available at* https://www.aespuertorico.com/en/ccr-0 (last visited April 12, 2021)

[31] *Id.*

ED_006328A_00039136-00011

moves through the environment over a period of years. The proposed AES liner construction would continue to pollute groundwater.

An EPA study using the Leaching Environmental Assessment Framework ("LEAF") shows that multiple hazardous substances, including aluminum, arsenic, boron, cadmium, chloride, chromium, fluoride, lead, lithium, molybdenum, selenium, sulfate, and thallium, can leach from the AES coal ash waste at high levels and then contaminate the local environment around the sites at which coal ash has been disposed.[32]

The 2015 Coal Combustion Residuals Rule mandates that companies that pollute groundwater above federal health standards must develop a strategy to prevent new releases to groundwater, ameliorate pollution, and restore the affected area to their original condition. 40 C.F.R. § 257.96 (a). AES's selected remedy to allegedly comply with the CCR Rule, namely installation of a liner plus Monitored Natural Attenuation ("MNA"), fails most of the criteria and objectives of the applicable regulation, 40 CFR 257.97(b) and (c), because it does not entail removal of the pollutants in the groundwater. This is cause for concern because the direction of the flow of groundwater is moving away from the AES pile of coal ash waste towards the coastal community and then to the bay.

AES's plan is flawed for several reasons. The plan does not meet CCR Rule requirements because of the deficiencies in the research commissioned by AES and the limitations of the proposed solutions. These are serious deficiencies and make the cleanup plan inadequate to remedy past and ongoing contamination of groundwater, air, and (potentially) surface waters with CCR from the AES plant. The law requires AES to submit a plan to the community that meets federal standards.

The measures proposed by AES do not prevent continued contamination from the CCR waste pile. The installation of a plastic liner to reduce future groundwater contamination would provide, at best, only a temporary barrier to CCR contaminants. The proposed liner does not meet the standards of federal law for an engineered CCR landfill and would not be effective in the long run. The AES cleanup proposal will not stop ongoing contamination from CCRs. Contaminated runoff and toxic fugitive dust are not adequately addressed in AES' proposed measures.

AES does not propose long-term or truly effective solutions to avoid continuous toxic CCR contamination. AES's plan does not present an effective solution to prevent the continued spread of CCR via air, groundwater and/or surface runoff. Containment measures for CCR should include placement in secure storage silos with impermeable floors and walls, as well as engineering

[32] A.C. Garrabrants, D.S. Kosson, R. DeLapp and Peter Kariher, Leaching Behavior of "AGREMAX" Collected from a Coal-Fired Power Plant in Puerto Rico, EPA 600/R-12/724 December 2012 | www.epa.gov/ord. See also, Independent laboratory tests conducted by TestAmerica and background levels for these metals taken from ATSDR Study, available at http://www.atsdr.cdc.gov/HAC/PHA/reports/isladevieques_02072003pr/tables.html#T2. (last visited April 12, 2021).

safeguards to contain CCR under severe wind and rain conditions in seismic-activity proof locations.

Furthermore, AES did not adequately investigate or characterize the nature and extent of the spread of contaminants from the CCR waste pile as required by the CCR Rule.[33] This is an essential first step to developing a cleanup plan. First, as a threshold matter, AES failed to characterize the CCR waste using the Leaching Environmental Assessment Framework ("LEAF"),[34] a battery of tests that accurately detects the leaching potential of coal combustion residuals. Second, AES failed to assess the extent of the CCR releases and their migration from the waste pile into adjacent wetlands and water bodies.

The EA indicates that the project site is a flood-prone area, with flood levels exceeding 3 meters. In addition, the EA documents the wetland area in the southwest area of the project site where AES proposes to continue to accumulate tens of thousands of tons of coal ash waste. Lithium variations above the drinking water detection level were detected in the extreme southwest of the property in the TW-C well, yet no explanation is provided for these data.[35] Furthermore, AES failed to survey the large wetland area just south of the plant to determine if there were heavy metals from CCR contamination in its sediment, surface water, or its underlying groundwater. Contamination of the wetland areas is likely to negatively impact aquatic life, birds, and crustaceans. Since the area is a habitat for game birds caught for human consumption, this can have adverse impacts on both public health and the local economy. Furthermore, the EA does not address the impact of proposed excavation on the aquifer water table, wetlands, and a flood-prone area.

AES also did not investigate CCR contamination in discharge areas of Las Mareas Bay. Although AES admits that contaminated groundwater is discharged into the bay in the low-tide zone,[36] it did not sample the water near the port nor the sediments in the area. Instead, AES sampled much deeper waters in the bay.

Lastly, AES cited an outdated survey on groundwater use in Las Mareas, a community neighboring the contaminated groundwater to the south. The survey used by AES dates back to 2002. To ensure that all households obtain water from a public drinking-water pipe or if there are existing private wells in the area, AES must carry out a new survey.

Further, confirmation of the leaching of dangerous contaminants from Agremax™ at the Guayama site highlights the risks from the use of 2 million tons of AES' Agremax™ as fill

---

[33] 40 C.F.R. § 257.95 (g) (1).

[34] An EPA study using the Leaching Environmental Assessment Framework ("LEAF") shows that aluminum, arsenic, boron, cadmium, chloride, chromium, fluoride, lead, lithium, molybdenum, selenium, sulfate, and thallium can leach from the AES coal ash waste at high levels and then contaminate the local environment around the sites at which coal ash has been disposed. A.C. Garrabrants, D.S. Kosson, R. DeLapp and Peter Kariher, Leaching Behavior of "AGREMAX" Collected from a Coal-Fired Power Plant in Puerto Rico, EPA 600/R-12/724 December 2012 | www.epa.gov/ord.

[35] Haley & Aldrich Report, p.100-110, https://www.aes.com/sites/default/files/2021-02/Corrective-Measures-Assessment-English.pdf (last visited April 12, 2021).

[36] DNA-Environment 2019 CCR Report (last visited April 12, 2021).

ED_006328A_00039136-00013

throughout southeastern Puerto Rico. Sample analyses commissioned by Earthjustice in July 2019 determined that the level of arsenic found in the coal ash deposited in Urb. Parque Gabriela and the Ranchos Guayama community, in Salinas, and the Dulces Sueños Connector, in Guayama, exceeds EPA standards and is considered harmful to human health. Levels of arsenic found in the ash, which remains exposed on the ground, are 9 to 22 times higher than the level considered safe for arsenic in residential soils, and 2 to 5 times higher than the level considered safe for soil in industrial properties established by the EPA. These levels of contaminants raise questions regarding the status of all coal ash fill sites in Puerto Rico where AES discharged its waste. It is highly likely the ash deposits are leaching harmful coal ash contaminants to underlying groundwater and/or nearby surface waters, similar to the documented damage occurring at the Guayama site. These unmonitored and often uncovered fill sites also pose serious dangers to human health from direct contact and inhalation of coal ash dust. Yet, to date, AES has not acknowledged their responsibility for cleanup of these sites nor is there any plan to test, monitor or remediate any of the fill sites.

V. AES's Plan Will Worsen Fugitive Dust Pollution

The AES coal ash waste pile grew to an accumulated amount of (at least) 487,000 tons of CCR in 2019, making it the largest CCR pile of any jurisdiction in the United States and its territories.[37] Fugitive dust from the CCR waste reaches nearby communities on a daily basis and contaminates the lungs of people who breathe the toxics contained in the ashes.

A July 2017 CCR Inspection Report for the AES coal ash waste pile at the AES plant site, containing 430,000 tons of CCR, notes that "localized rills were observed on the surface of stockpile slopes, they appeared to be related to over-watering by the water sprinkler . . . . The water truck was not operational at the time. Some fugitive dust caused by wind was observed on the west slope of the Stockpile at the time of inspection." Regarding the CCR pile, the Report describes that it had "increased to an estimated height of 120 feet," while its "slopes have become longer and steeper."[38]

AES's plan according to the EA and its engineering consultants, Winston Esteves and Steven Putrich (Haley & Aldrich), is to move half of the accumulated CCR on the Guayama site in order to install the first section of a plastic liner. The EA and the Report indicate that the liner placement would be done in two phases: phase 1 would consist of placing half of the CCR pile over the other half (located in an area identified for phase 2); the plastic liner would then be

[37] CCR 2017 Annual Inspection Report AES Puerto Rico, p. 3, July 2017, https://www.aes.com/sites/default/files/2021-02/2017_Annual-Inspection-Report.pdf (last visited April 12, 2021).
[38] *Id.*

ED_006328A_00039136-00014

installed in the original phase 1 area, and finally the entire CCR pile accumulated in the phase 2 area would be placed over the liner located in the phase 1 area.[39]

The movement of the AES coal ash waste would inevitably create clouds of toxic ash particles and migrate to nearby and densely populated communities such as Miramar, Santa Ana, San Martín, Puerto de Jobos, Mosquito and San Felipe. Residents of these nearby communities have filed several complaints with the Department of Natural and Environmental Resources because of fugitive coal ash dust reaching their homes on normal days of operation of the plant. The correction measures that AES proposes would require excavation and moving tens of thousands of tons of coal ash waste and would inevitably mobilize more fugitive dust than during normal operations.

The Siting Location issued by the Puerto Rico Planning Board for the AES plant required AES to transport and dispose of the coal ash waste outside of Puerto Rico due to the anticipated serious health hazards associated with the heavy metals and constituents of concern.

In the permit application documents, AES does not address compliance with Puerto Rico Law 5-2020, known as "Law to Prohibit the Deposit and Disposal of Coal Ash or Coal Combustion Residues in Puerto Rico," which obliges the company to remove the ashes of its facilities within 180 days.

VI. AES's Closure Announcement is Suspect

Recently, the AES Executive Vice President and COO, Bernerd Da Santos, made the following statements in an article in Caribbean Business, dated April 30, 2021, "AES Enters Retail Renewable Energy Market"[40] The article states: "Bernerd Da Santos, executive vice president and chief operating officer of AES, said the company is still in talks with PREPA to 'determine the solutions that are adequate for the Puerto Rico market.'" The article quotes Mr. Da Santos as stating, "We have the intention of transforming our energy production from coal to renewables before the 2027 deadline." Regarding the Energia Plus digital system, COO Da Santos stated, "We could bring this solution to Puerto Rico in the future. Puerto Rico would have to make regulatory changes for this system."[41] We strongly urge the Committee to request copies of the documents that would evidence AES's allegations. As noted in the previous sections of this testimony, AES made materially false statements with respect to its operations.

---

[39] Haley & Aldrich Report, p. 13 (section 4.3.1), https://www.aes.com/sites/default/files/2021-02/Corrective-Measures-Assessment-English.pdf (last visited April 12, 2021).
[40] https://caribbeanbusiness.com/aes-enters-retail-renewable-energy-market/?cn-reloaded=1
[41] *Id.*

ED_006328A_00039136-00015

Government regulations in different jurisdictions where AES operates require AES to retire 5 GW of coal-fired generation within 8 to 10 years.[42] Experts have noted AES's heavy debt burden and have called into question how AES would finance the new projects proposed.[43]

Another example of the untrustworthiness of AES are the recent actions of the AES Gener. In February 2021, AES Gener announced an agreement to sell the Guacolda thermoelectric plant, which is located in Huasco, Chile.[44] Groups in Chile denounced that AES Gener had committed to closing Guacolda, among other plants before 2040 but instead is selling the plants to a company that is not part of the decarbonization agreement.[45]

As in Puerto Rico, AES is attempting to improve its image as a greener company, but Chilean civil society groups underscore the damage to the health of the population and the lack of reparations.[46] They insist on the closure of the AES coal-fired plants in Chile to reduce local and global pollutant emissions, protect the health of the population and comply with the country's commitment to the Paris Agreement. "Commitments that AES Gener has permanently tried to avoid," according to Chilean experts.[47]

Conclusion

For the reasons summarized in this written testimony, we urge the Committee to procure the immediate closure of the AES coal-fired power plant in Guayama, Puerto Rico, prioritizing the safety of the air, water and soil, as well as the health of the affected communities. We urge the establishment of a just transition plan for the workers affected by the AES closure, particularly with rapid deployment by PREPA of on-site/rooftop solar and storage. Further, we ask for the total and complete removal of the AES coal ash waste in Puerto Rico, including the so-called Agremax™ mountain and other coal combustion residuals used as fill, as well as the full cleanup of the groundwater contaminated by the AES coal ash waste. Monitoring and decontamination of all areas impacted by the AES toxic coal ash is also necessary. AES must accept and assume responsibility for the damage to public health from its operations. Considering AES's history of fraudulent practices there should be an immediate suspension of all negotiations of new contracts with AES, including its affiliated companies. This inquiry should also include PREPA's Transmission and Distribution System Operation and Maintenance Agreement with Luma Energy, LLC which would perpetuate the operation of the AES coal-fired plant.

---

[42] https://seekingalpha.com/article/4434545-aes-corp-stock-transformation-opportunity-has-a-hurdle#comments

[43] Id.

[44] https://www.eldesconcierto.cl/medio-ambiente-y-naturaleza/2021/02/25/venta-de-termoelectrica-guacolda-levanta-dudas-sobre-el-proceso-de-descarbonizacion.html

[45] *Id.*

[46] https://www.elciudadano.com/chile/coalicion-chao-carbon-critica-venta-de-5-unidades-de-guacolda-de-aes-gener-y-reafirma-que-cierre-de-estas-industrias-debe-ser-por-ley/02/25/

[47] *Id.*

ED_006328A_00039136-00016

In Salinas, Puerto Rico, on June 28, 2021.

s/ Ruth Santiago
Ruth Santiago
RUA No. 8589
PO Box 518
Salinas, Puerto Rico 00751
T: (787) 312-2223
E: rstgo@gmail.com

Attachment:
List of organizations that join in this testimony
Comments on the Liner Proposed for AES, Puerto Rico by Ranajit Sahu, PhD

ED_006328A_00039136-00017

To: Huggins, Richard[Huggins.Richard@epa.gov]; Benware, Richard[Benware.Richard@epa.gov]
Cc: mozaeta@earthjustice.org[mozaeta@earthjustice.org]; Jose Rivera[rstgo2@gmail.com]
From: Lisa Evans[levans@earthjustice.org]
Sent: Thur 9/30/2021 7:04:47 PM (UTC)
Subject: Coal Ash Pollution and AES-PR
Final - Adm. Complaint AES Liner Construction project .pdf
f.Exhibit 1 - Sahu Report.pdf
(Sahu) Issues Re. AES Puerto Rico Landfill Drawings Review 9.30.21.docx
ID and sampling AES coal ash piles Puerto Rico.pdf
Oct 2020 Liner Project Drawings.pdf

Richard and Richard-
This email shares with you information that we recently received concerning CCR Rule violations at the AES-PR Guayama plant. We previously shared with you the administrative complaint that we filed with the Puerto Rico Permits Management Office on April 13, 2021 (complaint and technical comments attached again for your convenience).

Our April 2021 complaint was based on AES' 2015 plan, which was the most recent version of engineering drawings that we could obtain at the time. We recently obtained AES' construction drawings dated October 2020 (attached). These drawings clearly show that portions of the liner will be less than 5 feet above the groundwater table. Such placement violates the federal CCR Rule that requires the base of the liner be located no less than 1.52 meters (5 feet) above the upper limit of the uppermost aquifer. 40 CFR 257.60(a).

In the attached memorandum dated September 30, 2021, Dr. Ranajit Sahu provides his observations on the October 2020 construction drawings. His comments relate to both the liner construction as well as the absence of groundwater monitoring data for AES' "temporary wells." As Dr. Sahu explains, the missing data from these temporary wells are critical to understanding the nature and extent of groundwater contamination at the site (see pages 1-2). These well data, if shared, would provide a fuller picture of groundwater more distant from the source and may show high levels of lithium and molybdenum, as well as other contaminants. In addition, the data may show that the contaminant plume is not confined to an area near MW-4 but may be more widely dispersed. Second, Dr. Sahu points out that the construction drawings not only indicate that the liner will be within 3 feet of groundwater but that Agremax will remain below the liner and in contact with groundwater (pages 3- 5).

Also, as explained in the attached complaint and in the April 2021 Sahu comments, AES has failed to provide information sufficient to meet the CCR Rule's requirements for selection of a corrective action remedy (40 CFR 257.97). As a threshold matter, AES has not demonstrated that MNA will be an effective remedy. In addition, the extent and thoroughness of the removal of all contaminated soil is unclear, the plan lacks test results showing the compatibility of the liner with the coal ash that will be stored in the liner, and AES has not provided certain construction and construction quality assurance documents. AES' plans also indicate that significant quantities of Agremax will be used in the construction of the liner, which will likely result in Agremax coming into contact with groundwater, which will continue to mobilize contaminants into groundwater
Lastly, we are resubmitting information concerning the numerous piles of exposed coal ash that remain, unremediated, throughout southeastern Puerto Rico in environmental justice communities. This issue has been brought to EPA attention numerous times starting in 2011, and the problem is discussed again in the 2021 complaint. I am also attaching a 2019 sampling log, which includes photographs of 18 uncovered coal ash piles. Analyses in 2020 of a few of these exposed dump sites indicate that the level of arsenic in the coal ash dumped in Urb. Parque Gabriela and the Ranchos Guayama community in Salinas and the Dulces Suenos Connector in Guayama exceeds EPA safe soil standards. The arsenic levels found were 9 to 22 times higher than the EPA's standard for residential soil and 2-5 times higher than the level considered safe for soil in industrial areas. These exposed dump sites, which include piles in residential areas and near a hospital, present an imminent and substantial endangerment actionable under Section 7003 of RCRA.

We would appreciate EPA's swift action on all of the above issues to ensure that AES-PR is brought into compliance with the CCR Rule to protect air and groundwater at the Guayama plant and that the longstanding threat to Puerto Rico residents from exposed piles of dumped coal ash are finally remediated.

We look forward to talking soon about these issues.

Sincerely,
Lisa Evans

Lisa Evans
Senior Counsel
Earthjustice
21 Ocean Ave.
Marblehead, MA 01945
T: (781) 631-4119
C: Ex. 6 Personal Privacy (PP)
www.earthjustice.org

*please consider the environment before printing

The information contained in this email message may be privileged, confidential and protected from disclosure. If you are not the intended recipient, any dissemination, distribution or copying is strictly prohibited. If you think that you have received this email message in error, please notify the sender by reply email and delete the message and any attachments.

Observations Regarding AES Puerto Rico Ash Cell Construction Plan and Groundwater Monitoring Reports

Dr. Ranajit (Ron) Sahu

1. No data (water level, water quality, etc.) for the temporary monitoring wells (TW-series) are provided in the 2020 Groundwater Monitoring Report (for the May 2020 and October 2020 monitoring events) dated January 31, 2021. The TW-wells are located in the vicinity of the downgradient MW-series wells, and they can provide additional useful information on the contaminant levels that are observed in the MW-wells. As such that data can be used to better delineate the high concentrations of groundwater contaminants in addition to the data from the 5 monitoring wells (MW-series) - for example the already elevated levels of lithium and molybdenum clearly observed in downgradient well MW-4, per the figures below.

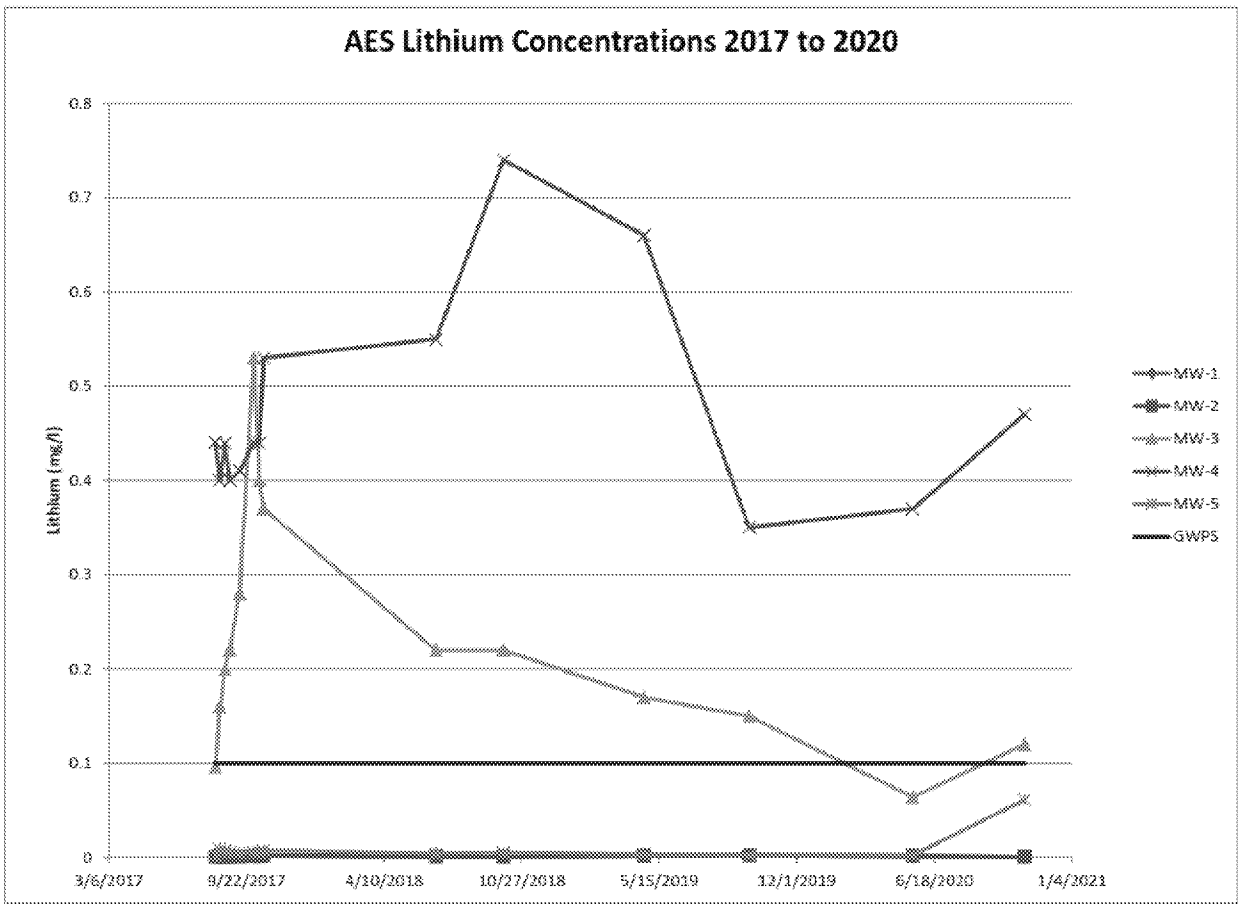

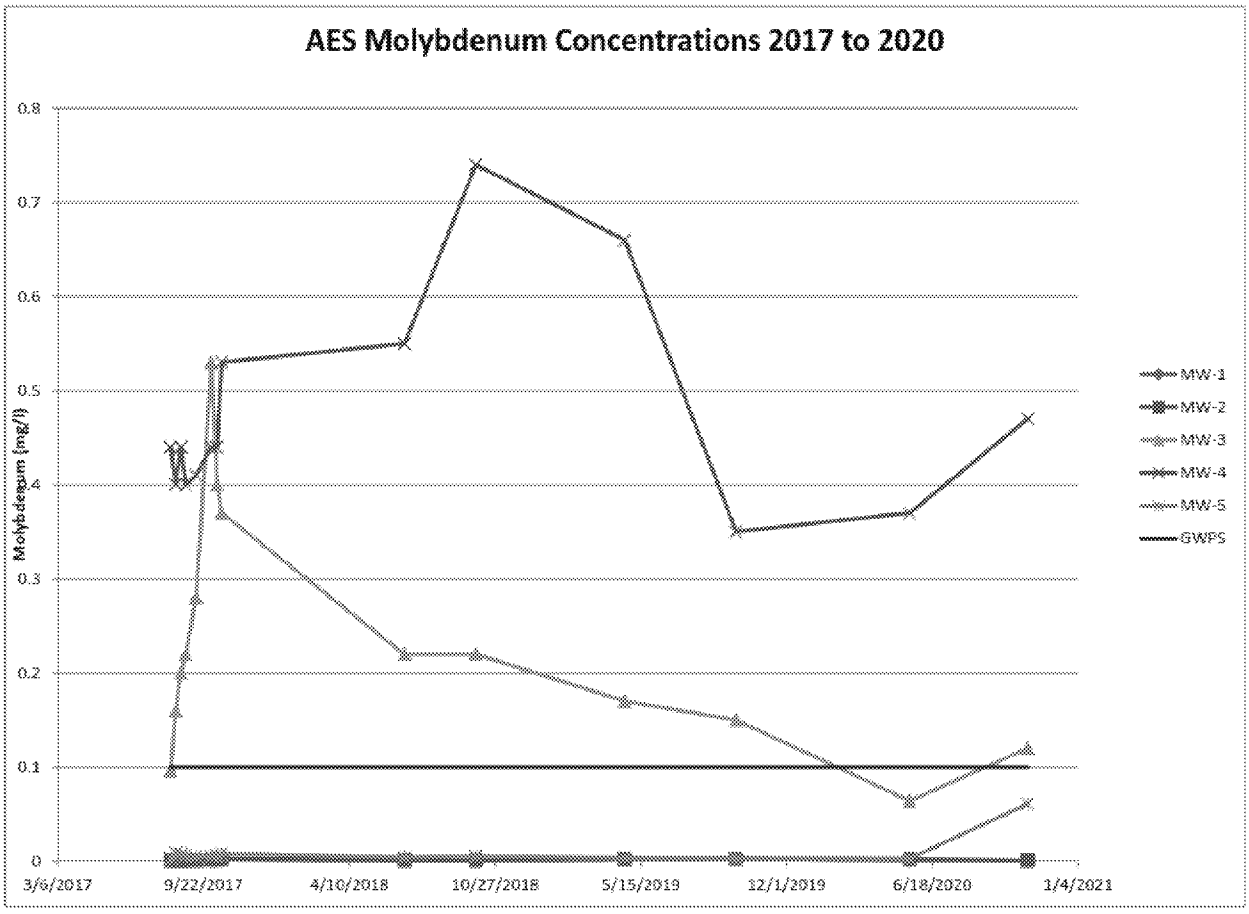
AES Molybdenum Concentrations 2017 to 2020
Molybdenum (mg/l)
0.8
0.7
0.6
0.5
0.4
0.3
0.2
0.1
0
3/6/2017
9/22/2017
4/10/2018
10/27/2018
5/15/2019
12/1/2019
6/18/2020
1/4/2021
MW-1
MW-2
MW-3
MW-4
MW-5
GWPS

2. The Ash Cell Construction Plan drawings (1 of 7 through 7 of 7) dated October 2020 clearly show that portions of the proposed remedy will be less than 5 feet above groundwater. See the B-B (North-South transect for Phase II) and C-C (North-South transect for Phase I) in drawing 4 of 7.

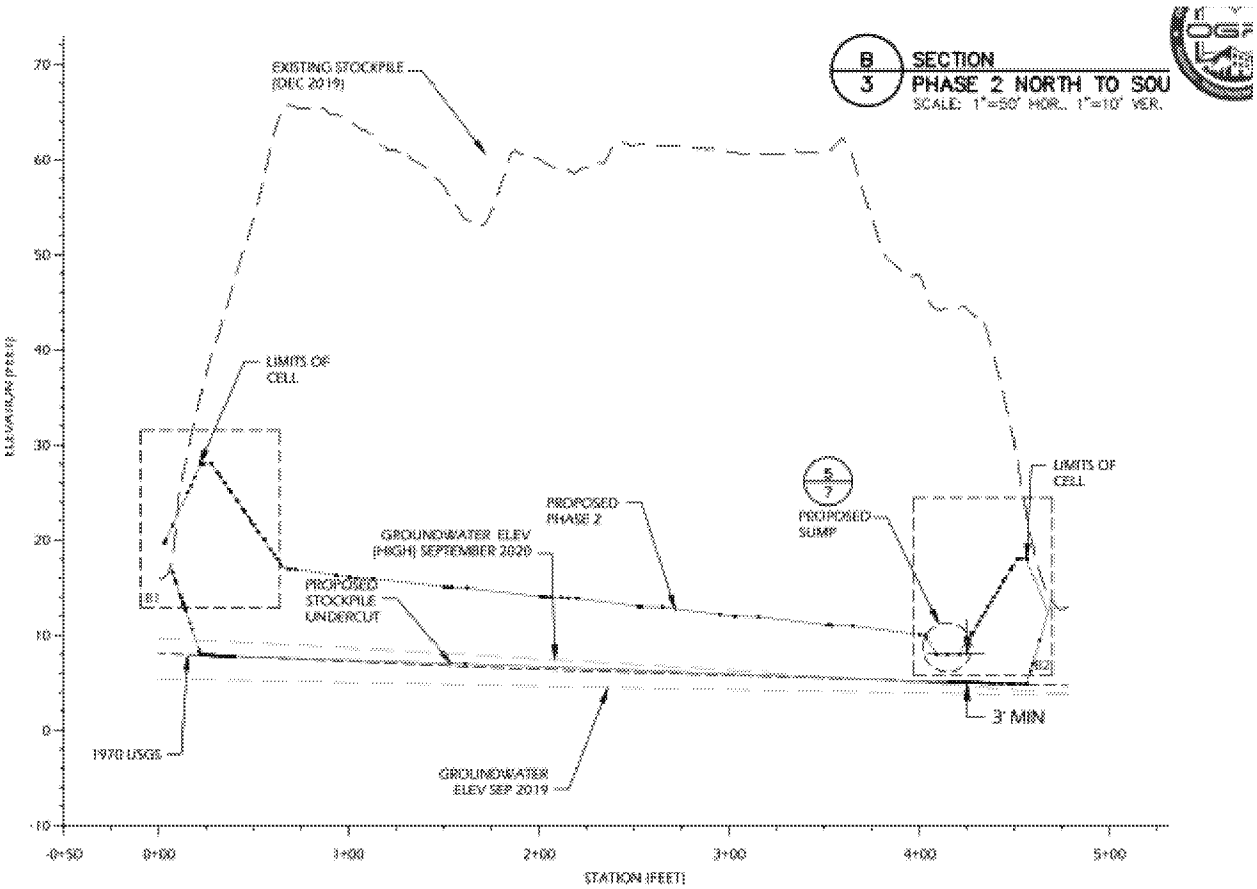

(a) Section B-B above from drawing 6 of 7 clearly shows that the proposed Phase 2 (blue line) will be only 3 feet from the September 2020 groundwater elevation level at the sump. There is no basis to assume that the groundwater level observed in September 2020 could not be exceeded in the future, making the separation even smaller than 3 feet as indicated in the drawing.

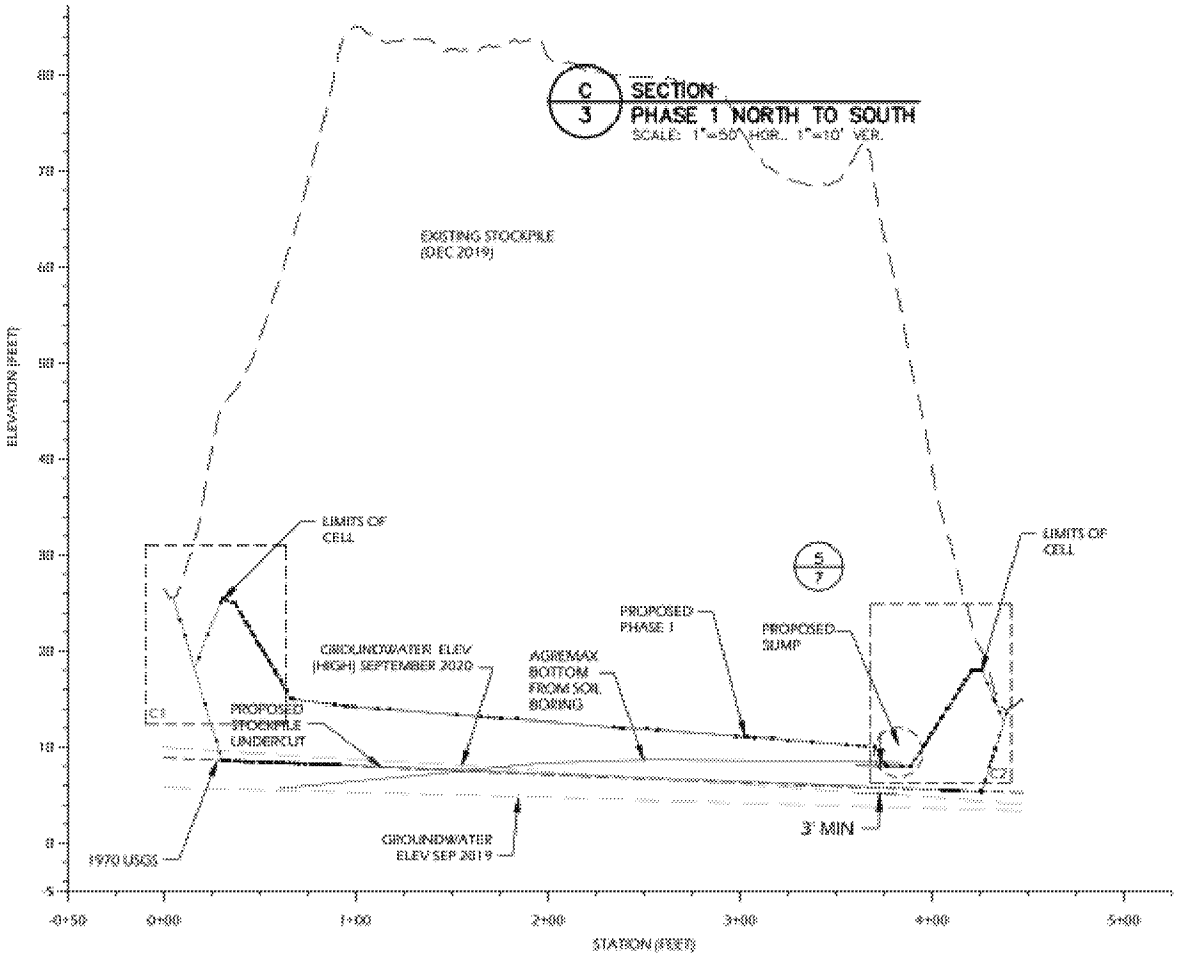

(b) Similarly, Section C-C above from drawing 6 of 7 also clearly shows that the proposed Phase 1 (blue line) will be only 3 feet from the September 2020 groundwater elevation level at the sump. Again, there is no basis to assume that the groundwater level observed in September 2020 could not be exceeded in the future, making the separation even smaller than 3 feet as indicated in the drawing.

(c) In addition, this section also shows a pink line noted as the "Agremax Bottom from Soil Boring," without indicating which boring(s) were the source of this data. Assuming that it is accurate, this section clearly shows that portions of the pink line are below the Proposed Stockpile Undercut, meaning that Agremax will be left in place below the undercut, and below the liner proposed for Phase I. The cross section also clearly shows that the Agremax in place (i.e., pink line) is below the September 2020 groundwater level as well as likely the 2019 groundwater level – in other words Agremax is in contact with groundwater at the site.

3. The construction of the liner clearly assumes that significant quantities of Agremax will or can be used for liner construction. See the cross section of the proposed liner from drawing 7 of 7 below.

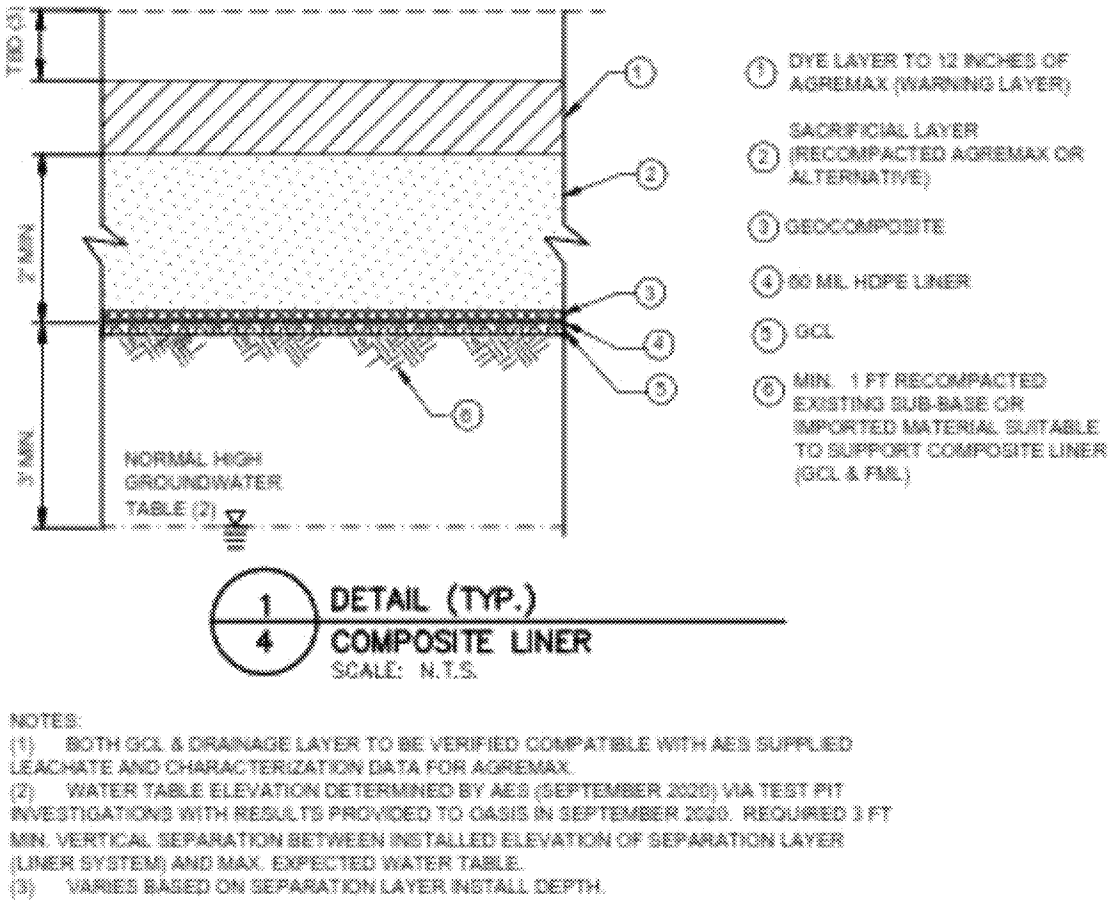

NOTES:
(1) BOTH GCL & DRAINAGE LAYER TO BE VERIFIED COMPATIBLE WITH AES SUPPLIED LEACHATE AND CHARACTERIZATION DATA FOR AGREMAX.
(2) WATER TABLE ELEVATION DETERMINED BY AES (SEPTEMBER 2020) VIA TEST PIT INVESTIGATIONS WITH RESULTS PROVIDED TO OASIS IN SEPTEMBER 2020. REQUIRED 3 FT MIN. VERTICAL SEPARATION BETWEEN INSTALLED ELEVATION OF SEPARATION LAYER (LINER SYSTEM) AND MAX. EXPECTED WATER TABLE.
(3) VARIES BASED ON SEPARATION LAYER INSTALL DEPTH.

Note the explicit use of Agremax in Layer 1, potential use in Layer 2 and also in Layer 6 (i.e., "recompacted existing sub-base….") which can clearly contain Agremax, especially per discussion above showing that not all Agremax is being removed prior to liner construction. Note also that the level of groundwater indicated in the cross section above is misleading given the transect B-B and C-C discussions above.

Based on this it is likely that any contaminants left in Agremax especially in Layer 6 will come into contact with groundwater and will continue to mobilize such contaminants into groundwater even if it is assumed that liner installation is otherwise flawless.

Informe sobre muestreo de cenizas de carbón

I. Encargados del proyecto

a. Víctor Alvarado Guzmán – Coordinador y fotógrafo
b. Manolo Díaz Pérez – organizador y recopilador de datos
c. Dr. Osvaldo Rosario López – perito y muestreo

II. Acciones realizadas

a. 2 de marzo de 2019

i. Manolo Díaz y Víctor Alvarado realizaron una vista ocular y documentación sobre los 36 lugares, establecidos en el mapa provisto por Earthjustice, donde hay cenizas de carbón. La idea era identificar los lugares que presentan cenizas de carbón expuestas y aquellos que no. Esto facilitaría la toma de muestras posteriores del Dr. Osvaldo Rosario López.
ii. De 36 lugares identificados previamente, la cantidad aumentó a 49. De estos, 18 mostraron cenizas expuestas.
iii. Se revisaron los lugares y se tomaron fotos. De los lugares nuevos identificados se tomaron coordenadas.

b. 9 de marzo de 2019

i. Manolo Díaz, el Dr. Osvaldo Rosario y Víctor Alvarado visitaron 17 de los 18 lugares previamente identificados con cenizas expuestas. El Dr. Rosario tomó las muestras
ii. De los 18 lugares identificados el 2 de marzo, se tomaron muestras de 17 y una muestra de control sugerida por el Dr. Rosario.
iii. Las muestras fueron tomadas en envases de plástico, especificados por el Dr. Rosario, provisto por la empresa ARCHEM.
iv. Se identificó cada envase con un número de muestra, área (pueblo), número de lugar identificado en mapa y coordenadas.

Report on coal ash sampling

I. Project managers

a. Víctor Alvarado Guzmán - Coordinator and photographer
b. Manolo Díaz Pérez - organizer and data collector
c. Dr. Osvaldo Rosario López - expert and sampling

II. Actions done

a. March 2, 2019

i. Manolo Díaz and Víctor Alvarado made an ocular view and documentation about the 36 places, established in the map provided by Earthjustice, where there is coal ash. The idea was to identify the places that have exposed coal ash and those that do not. This would facilitate the taking of later samples of Dr. Osvaldo Rosario López.
ii. Of 36 previously identified sites, the amount increased to 49. Of these, 18 showed exposed ashes.
iii. The places were reviewed and photos were taken. From the new places identified coordinates were taken.

b. March 9, 2019

i. Manolo Díaz, Dr. Osvaldo Rosario and Víctor Alvarado visited 17 of the 18 places previously identified with exposed ashes. Dr. Rosario took the samples.
ii. Of the 18 sites identified on March 2, 17 samples were taken and a control sample suggested by Dr. Rosario.
iii. The samples were taken in plastic containers, specified by Dr. Rosario, provided by the company ARCHEM.
iv. Each container was identified with a sample number, area (town), location number identified on the map and coordinates.

III. Fotos (todas las fotos fueron tomada el 9 de marzo de 2019, excepto aquellas en las que se señale que fueron tomadas en otras fechas - all photos were taken on March 9, 2019, except those that indicate that they were taken on other dates)

1. Site 2 17.9838 -66.1586 Pozo Hondo Road / RCC exposed

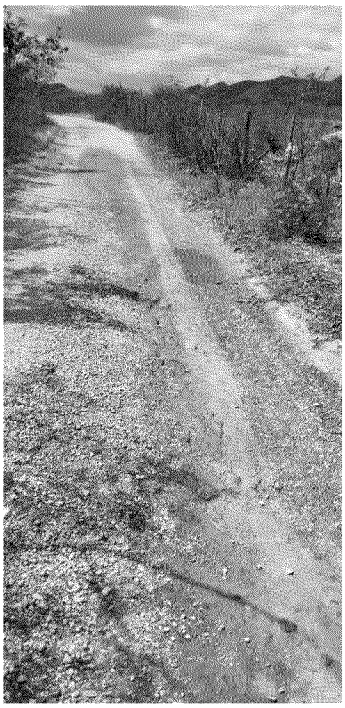

2. Site 9 17.9856 -66.2832 Urb. Parque Gabriela North side

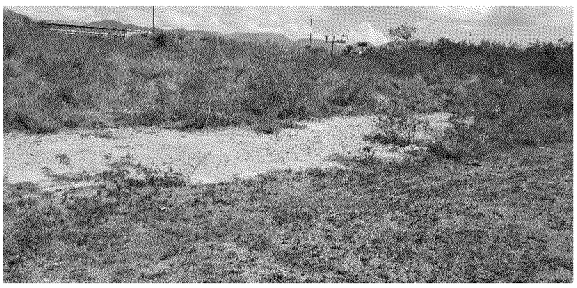

3. Site 24 17.9981 -66.1144 Dulce Sueño Street / RCC exposed

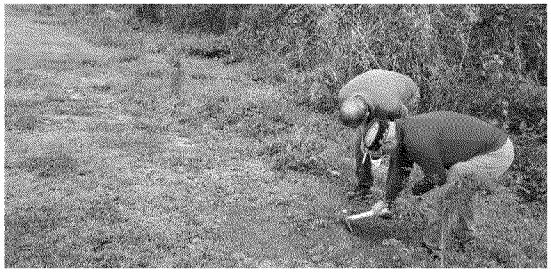

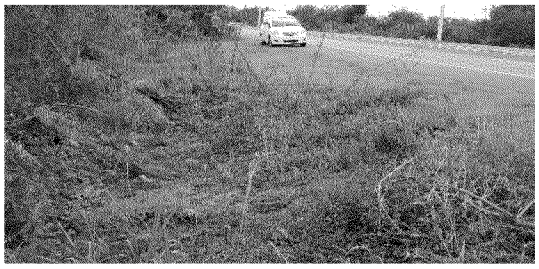

4. Site 28 17.9852 -66.1403 Road near Guayama Landfill

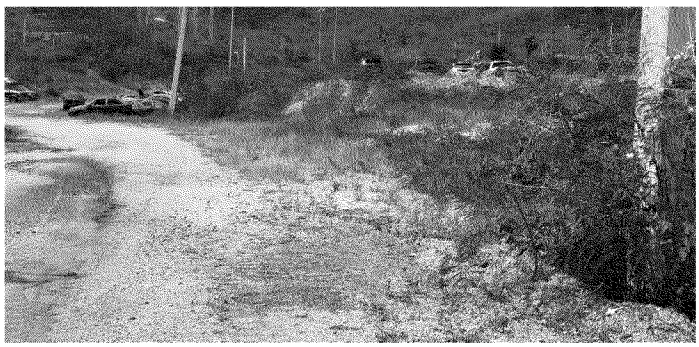

5. Site 37 17.9719 -66.2949 New site / Sewer pipe proyect / RCC exposed

6. Site 38 17.9723 -66.2959 New site / Sewer pipe proyect / Near elemental school / RCC exposed

Foto tomada el 2 de marzo de 2019

7. Site 39 17.975 -66.2944 New Site / Storm channel slope near Salinas hospital / RCC exposed

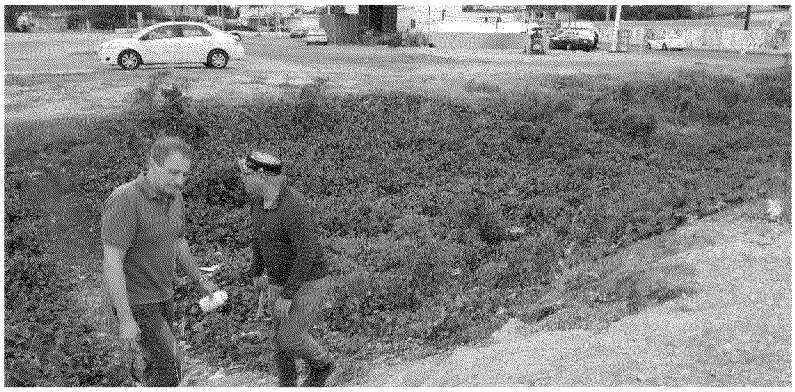

8. Site 40 17.975 -66.2947 New site / Near Salinas hospital / RCC exposed

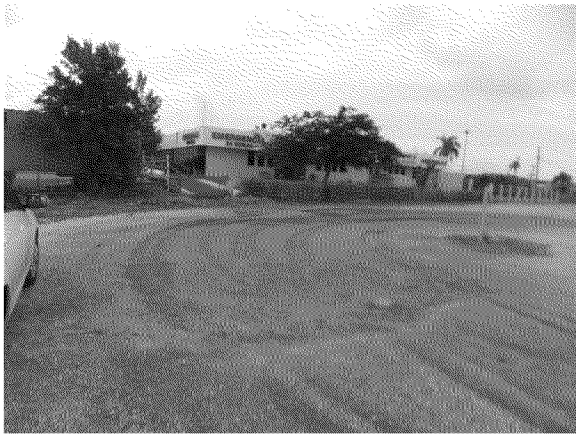

Esta foto fue tomada el 2 de marzo de 2019, al fondo, en color verde, la Escuela Superior Stella Márquez

9. Site 42 17.9708 -66.2844 New site / Mata Buey road side / RCC exposed

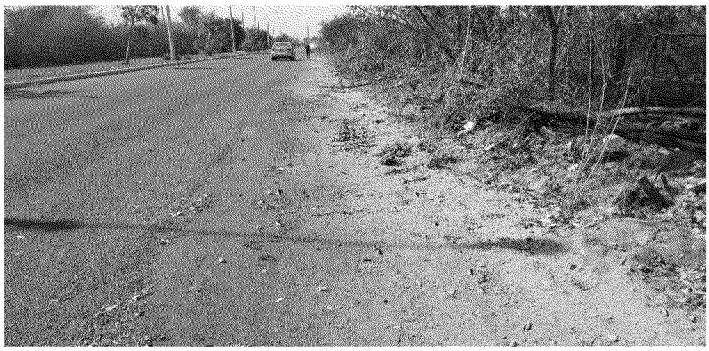

Foto tomada el 2 de marzo de 2019

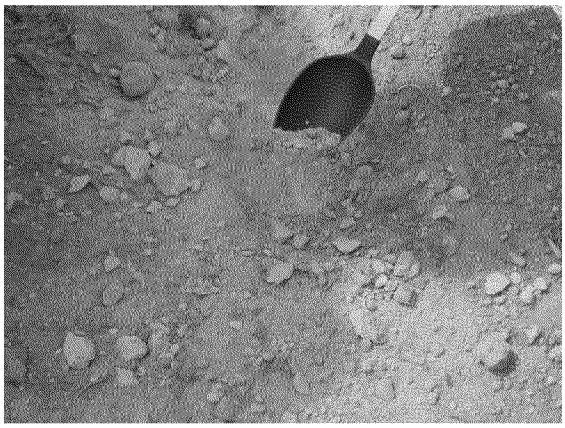

10. Site 43 17.9961 -66.2197 New site / PR 706 near 38KV lines / RCC exposed

11. Site 44 18.0061 -66.2199 New Site / Rancho Guayama (front of Hacienda Julia sign) / RCC exposed

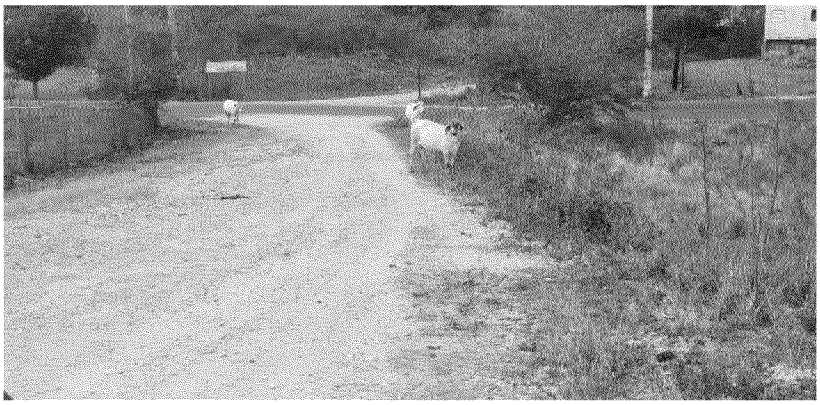

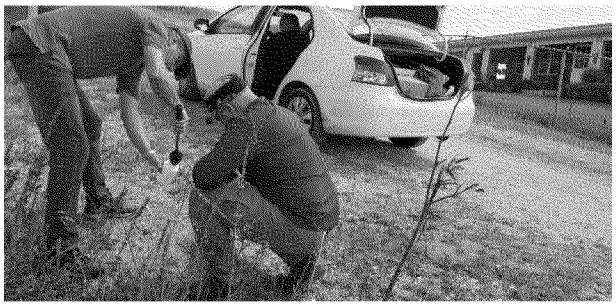

Foto tomada el 2 de marzo de 2019

12. Site 45 18.0113 -66.2143 New Site / Rancho Guayama , Luis Llorens Torres street / RCC exposed

Fotos adicionales de Luis Llorens Torres Street (fotos tomadas el 2 de marzo de 2019)

13. Site 46 18.0008 -66.3613 New site / PR 542 road Int. / RCC exposed

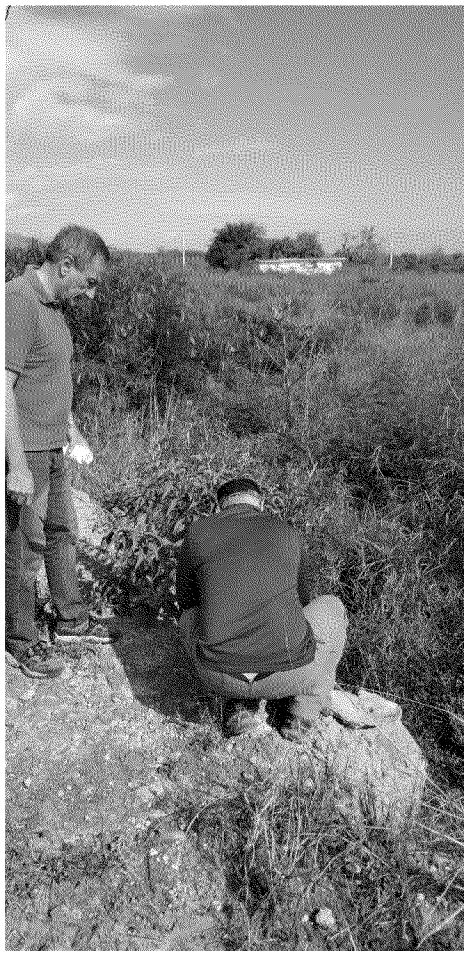

14. Site 47 17.9698 -66.2849 New Site / Sewer pipe proyect near Urb. Brisas de Eevelymar / RCC exposed

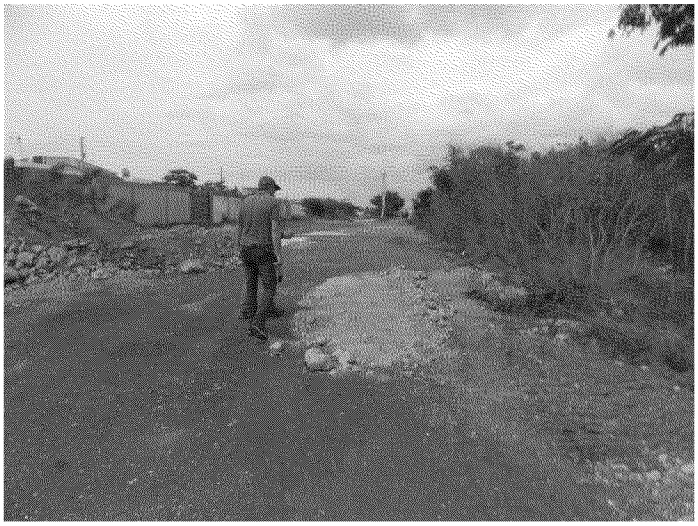

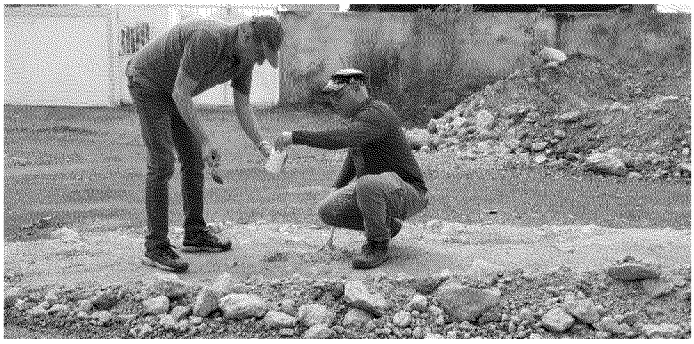

15. Site 48 17.9707 -66.2894 New Site / Urb. Valles de Salinas / RCC exposed

16. Site 49 17.9793 -66.0388 Pastureland PR-3 North / RCC Evidence

17. Site 50 17.9964 -66.2201 New site / PR 706 near 38KV lines West

Foto tomada el 2 de marzo de 2019

18. Site 51 17.9843 -66.2935 Control Sample / west side Acces PR 52 Near Salinas Toll Plaza

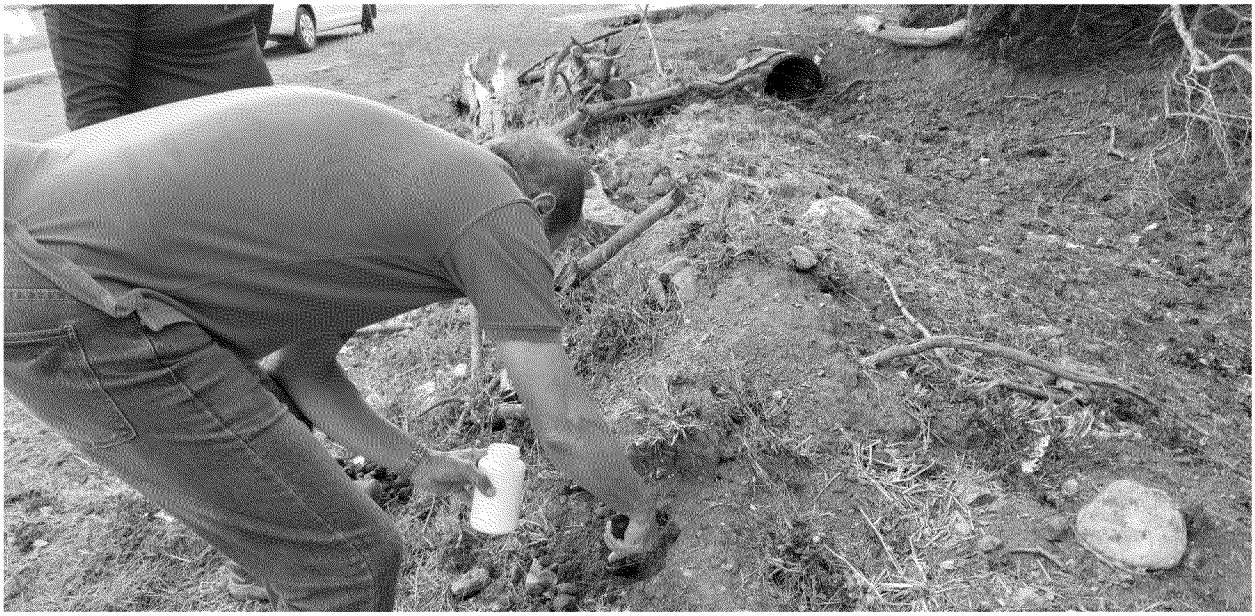

AES

PR TOTAL ENERGY PLANT

GUAYAMA, PUERTO RICO

ASH CELL CONSTRUCTION PLAN

PROJECT NO.: 15-3652

FINAL, OCTOBER 2020

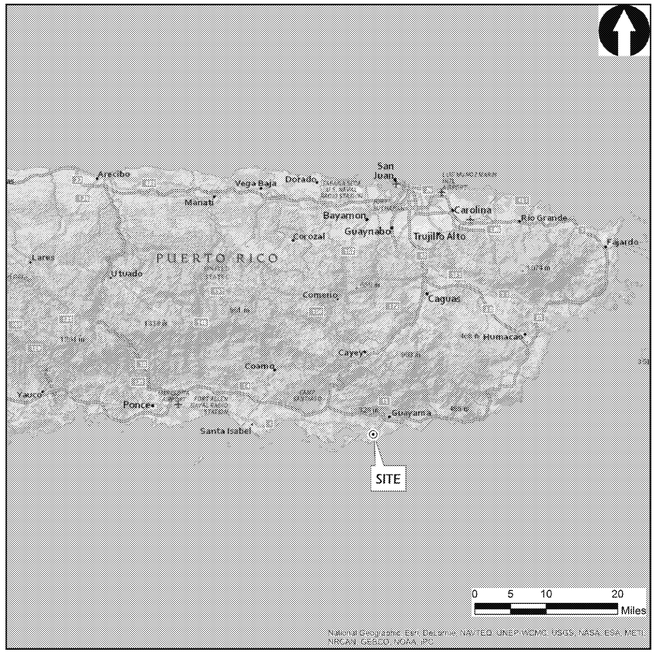

LOCATION MAP

DRAWING LIST

1. COVER SHEET
2. EXISTING SITE CONDITIONS
3. STOCKPILE UNDERCUT PLAN
4. BASE GRADING PLAN
5. PHASE 1 BASE GRADING PLAN
6. LANDFILL CROSS SECTIONS
7. DETAILS

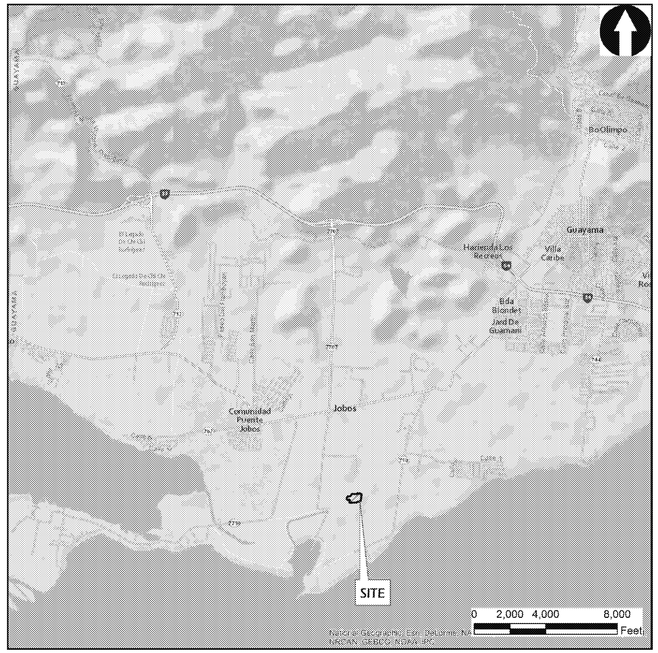

VICINITY MAP

PREPARED FOR/ SITE CONTACT

AES - PR TOTAL ENERGY PLANT
GUAYAMA, PUERTO RICO
CONTACT: MICHELLE LOPEZ ASCENCIO
PHONE: (787) 866-8117 x2349
FAX: (787) 866-8139

ENGINEER

OASIS CONSULTING SERVICES
45 WOODSTOCK STREET
ROSWELL, GEORGIA 30075
CONTACT: MICHAEL J. MONTELEONE
PHONE: (678) 739-2400
FAX: (770) 552-5550

DECLARACIONES DE CERTIFICACIÓN

YO MICHAEL MONTELEONE, LIC. # 21347, CERTIFICO QUE SOY EL PROFESIONAL QUE CONFECCIONO Y/O DISEÑO Y/O PREPARO ESTOS PLANOS Y LAS ESPECIFICACIONES COMPLEMENTARIAS. TAMBIÉN, CERTIFICO QUE ENTIENDO QUE DICHOS PLANOS Y ESPECIFICACIONES CUMPLEN CON LAS DISPOSICIONES APLICABLES DEL REGLAMENTO CONJUNTO Y LAS DISPOSICIONES APLICABLES DE LOS REGLAMENTOS Y CÓDIGOS DE CONSTRUCCIÓN VIGENTES DE LAS AGENCIAS, JUNTAS REGLAMENTADORAS O CORPORACIONES PÚBLICAS CON JURISDICCIÓN. CERTIFICO, ADEMÁS, QUE EN LA PREPARACIÓN DE ESTOS PLANOS Y ESPECIFICACIONES SE HA CUMPLIDO CABALMENTE CON LO DISPUESTO EN LA LEY 14-2004, SEGÚN ENMENDADA, CONOCIDA COMO LA "LEY PARA LA INVERSIÓN POR LA INDUSTRIA PUERTORRIQUEÑA" Y CON LA LEY NUM.319 DE 15 DE MAYO DE 1938, SEGÚN ENMENDADA. RECONOZCO QUE CUALQUIER DECLARACIÓN FALSA O FALSIFICACIÓN DE LOS HECHOS QUE SE HAYA PRODUCIDO POR DESCONOCIMIENTO O POR NEGLIGENCIA YA SEA POR MÍ, MIS AGENTES O EMPLEADOS, O POR OTRAS PERSONAS CON MI CONOCIMIENTO, ME HACEN RESPONSABLES DE CUALQUIER ACCIÓN JUDICIAL Y DISCIPLINARIA POR LA OGPE.

REV.	DATE	DESCRIPTION	DRN	APP
2	10/28/20	REVISED GROUNDWATER TABLE.	SS	MJM
1	4/6/20	REVISED GRADING	SS	MJM
0	10/23	ISSUE FOR DRAFT	SS	MJM

PREPARED FOR: AES - PR TOTAL ENERGY PLANT, GUAYAMA, PUERTO RICO

PREPARED BY: OASIS CONSULTING SERVICES, 45 WOODSTOCK STREET, ROSWELL, GEORGIA 30075, PHONE: (678) 739-2400 • FAX: (770) 552-5550

MICHAEL J. MONTELEONE, INGENIERO LICENCIADO, LIC. #21347, PUERTO RICO

SITE: AES - PR TOTAL ENERGY PLANT, GUAYAMA, PUERTO RICO

PROJECT: ASH CELL CONSTRUCTION PLAN

TITLE: COVER SHEET

DESIGN BY:	S.SIN	DATE BY:	OCTOBER 2020
DRAWN BY:	S.SIN	PROJECT NO.:	153652
CHECKED BY:	M.J.MONTELEONE	FILE:	153652 AES F03s
REVIEWED BY:	M.J.MONTELEONE	SHEET NO.: 1 OF 7	REV.: 2
APPROVED BY:	M.J.MONTELEONE		

C:\Projects\AES\153652 AES\DRAWINGS\153652 AES F03s.dwg, 2/11/2021 11:34 AM, SAMUEL.SIN

LEGEND

30 — EXISTING CONTOURS (FEET)

7 — GROUNDWATER ELEVATION (SEPTEMBER 2020)

NOTES:

1. EXISTING ASH PILE SURVEY PROVIDED BY ARC SURVEYING & MAPPING, INC. OF JACKSONVILLE, FLORIDA DATED JUNE 12, 2015. HORIZONTAL POSITIONING IS BASED ON A NAIL LOCATED UNDER THE AES RANGE TOWER, BEING N.694150.28, E.752376.77, AND IS REFERENCED TO THE LAMBERT PROJECTION FOR PUERTO RICO AND THE VIRGIN ISLANDS, NORTH AMERICAN DATUM OF 1983 (NAD83). VERTICAL POSITIONING IS BASED ON A NAIL LOCATED UNDER THE AES RANGE TOWER, HAVING AN ELEVATION OF 9.068 FEET AND IS REFERENCED TO MEAN LOW WATER.

2. EXISTING GROUND RUN SURVEY PROVIDED BY ROMU SURVEYING OF CAGUAS, PR. DATED DECEMBER 2019.

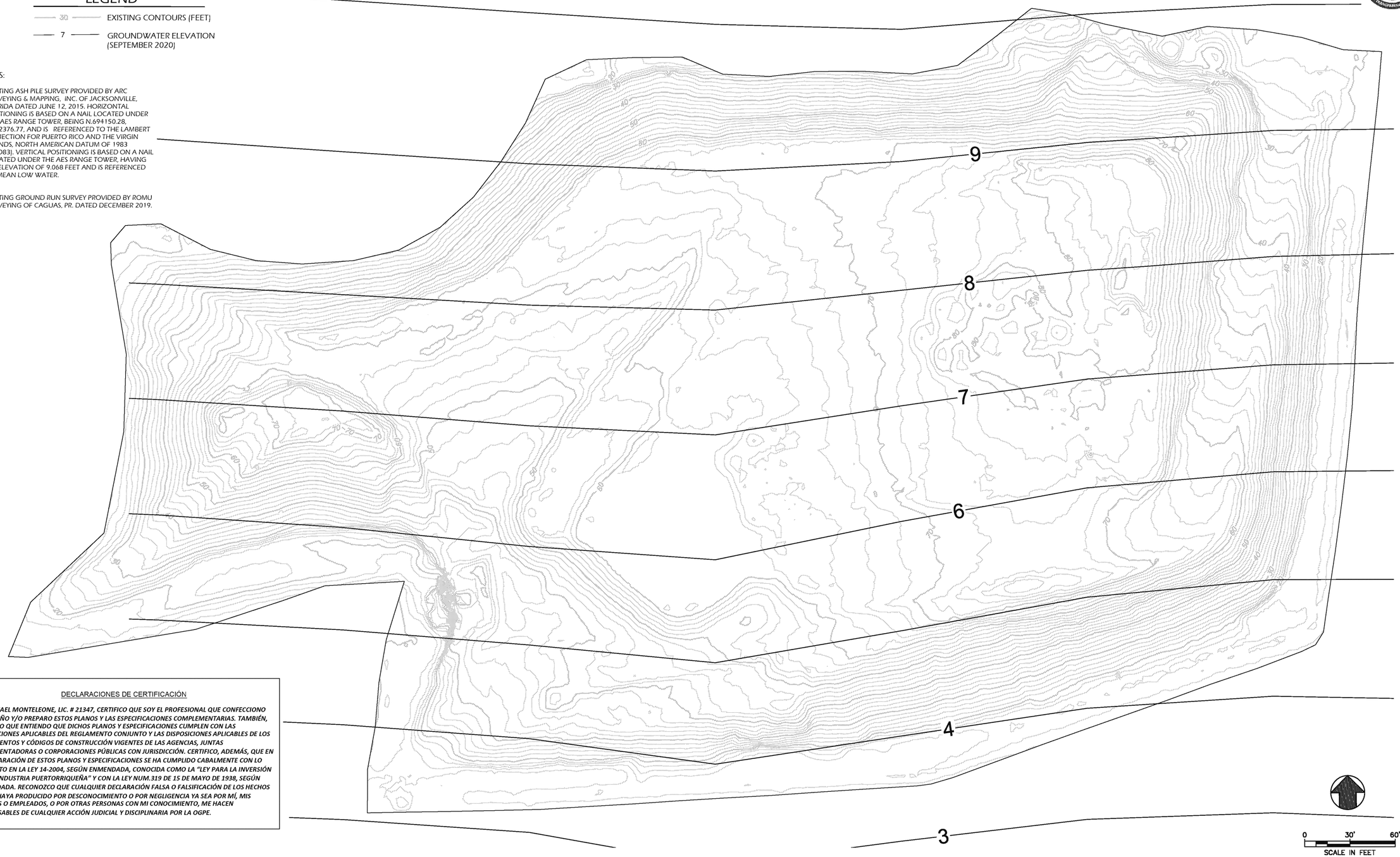

DECLARACIONES DE CERTIFICACIÓN

YO MICHAEL MONTELEONE, LIC. # 21347, CERTIFICO QUE SOY EL PROFESIONAL QUE CONFECCIONO Y/O DISEÑO Y/O PREPARO ESTOS PLANOS Y LAS ESPECIFICACIONES COMPLEMENTARIAS. TAMBIÉN, CERTIFICO QUE ENTIENDO QUE DICHOS PLANOS Y ESPECIFICACIONES CUMPLEN CON LAS DISPOSICIONES APLICABLES DEL REGLAMENTO CONJUNTO Y LAS DISPOSICIONES APLICABLES DE LOS REGLAMENTOS Y CÓDIGOS DE CONSTRUCCIÓN VIGENTES DE LAS AGENCIAS, JUNTAS REGLAMENTADORAS O CORPORACIONES PÚBLICAS CON JURISDICCIÓN. CERTIFICO, ADEMÁS, QUE EN LA PREPARACIÓN DE ESTOS PLANOS Y ESPECIFICACIONES SE HA CUMPLIDO CABALMENTE CON LO DISPUESTO EN LA LEY 14-2004, SEGÚN ENMENDADA, CONOCIDA COMO LA "LEY PARA LA INVERSIÓN POR LA INDUSTRIA PUERTORRIQUEÑA" Y CON LA LEY NUM.319 DE 15 DE MAYO DE 1938, SEGÚN ENMENDADA. RECONOZCO QUE CUALQUIER DECLARACIÓN FALSA O FALSIFICACIÓN DE LOS HECHOS QUE SE HAYA PRODUCIDO POR DESCONOCIMIENTO O POR NEGLIGENCIA YA SEA POR MÍ, MIS AGENTES O EMPLEADOS, O POR OTRAS PERSONAS CON MI CONOCIMIENTO, ME HACEN RESPONSABLES DE CUALQUIER ACCIÓN JUDICIAL Y DISCIPLINARIA POR LA OGPE.

REV.	DATE	DESCRIPTION	DRN	APP
2	10/28/20	REVISED GROUNDWATER TABLE.	SS	MJM
1	4/6/20	REVISED GRADING	SS	MJM
0	10/23	ISSUE FOR DRAFT	SS	MJM

PREPARED FOR: AES Puerto Rico

AES - PR TOTAL ENERGY PLANT
GUAYAMA, PUERTO RICO

PREPARED BY: OASIS CONSULTING SERVICES

45 WOODSTOCK STREET
ROSWELL, GEORGIA 30075
PHONE: (678) 739-2400 • FAX: (770) 552-5550

MICHAEL J. MONTELEONE INGENIERO LICENCIADO LIC. #21347 PUERTO RICO

SITE: AES - PR TOTAL ENERGY PLANT GUAYAMA, PUERTO RICO

PROJECT: ASH CELL CONSTRUCTION PLAN

TITLE: EXISTING SITE CONDITIONS

DESIGN BY:	S.SIN	DATE BY:	OCTOBER 2020
DRAWN BY:	S.SIN	PROJECT NO.:	153652
CHECKED BY:	M.J.MONTELEONE	FILE:	153652 AES F03s
REVIEWED BY:	M.J.MONTELEONE	SHEET NO.: 2 OF 7	REV.: 2
APPROVED BY:	M.J.MONTELEONE		

C:\Project\AES\153652 AES\DRAWINGS\153652 AES F03s.dwg, 2/11/2021 11:34 AM, SAMUEL SIN

LEGEND

30 — EXISTING CONTOURS (FEET)

10 — PROPOSED CONTOURS (FEET)

NOTES:

1. EXISTING ASH PILE SURVEY PROVIDED BY ARC SURVEYING & MAPPING, INC. OF JACKSONVILLE, FLORIDA DATED JUNE 12, 2015. HORIZONTAL POSITIONING IS BASED ON A NAIL LOCATED UNDER THE AES RANGE TOWER, BEING N.694150.28, E.752376.77, AND IS REFERENCED TO THE LAMBERT PROJECTION FOR PUERTO RICO AND THE VIRGIN ISLANDS, NORTH AMERICAN DATUM OF 1983 (NAD83). VERTICAL POSITIONING IS BASED ON A NAIL LOCATED UNDER THE AES RANGE TOWER, HAVING AN ELEVATION OF 9.068 FEET AND IS REFERENCED TO MEAN LOW WATER.

2. EXISTING GROUND RUN SURVEY PROVIDED BY ROMU SURVEYING OF CAGUAS, PR. DATED DECEMBER 2019.

1. Undercut to 1967 USGS surface Volume:
   Cut volume (unadjusted) 515651 Cu. Yd.
2. Undercut to 1967 USGS surface Volume (Phase 1):
   Cut volume (unadjusted) 344313 Cu. Yd.
3. Undercut to 1967 USGS surface Volume (Phase 2):
   Cut volume (unadjusted) 171338 Cu. Yd.

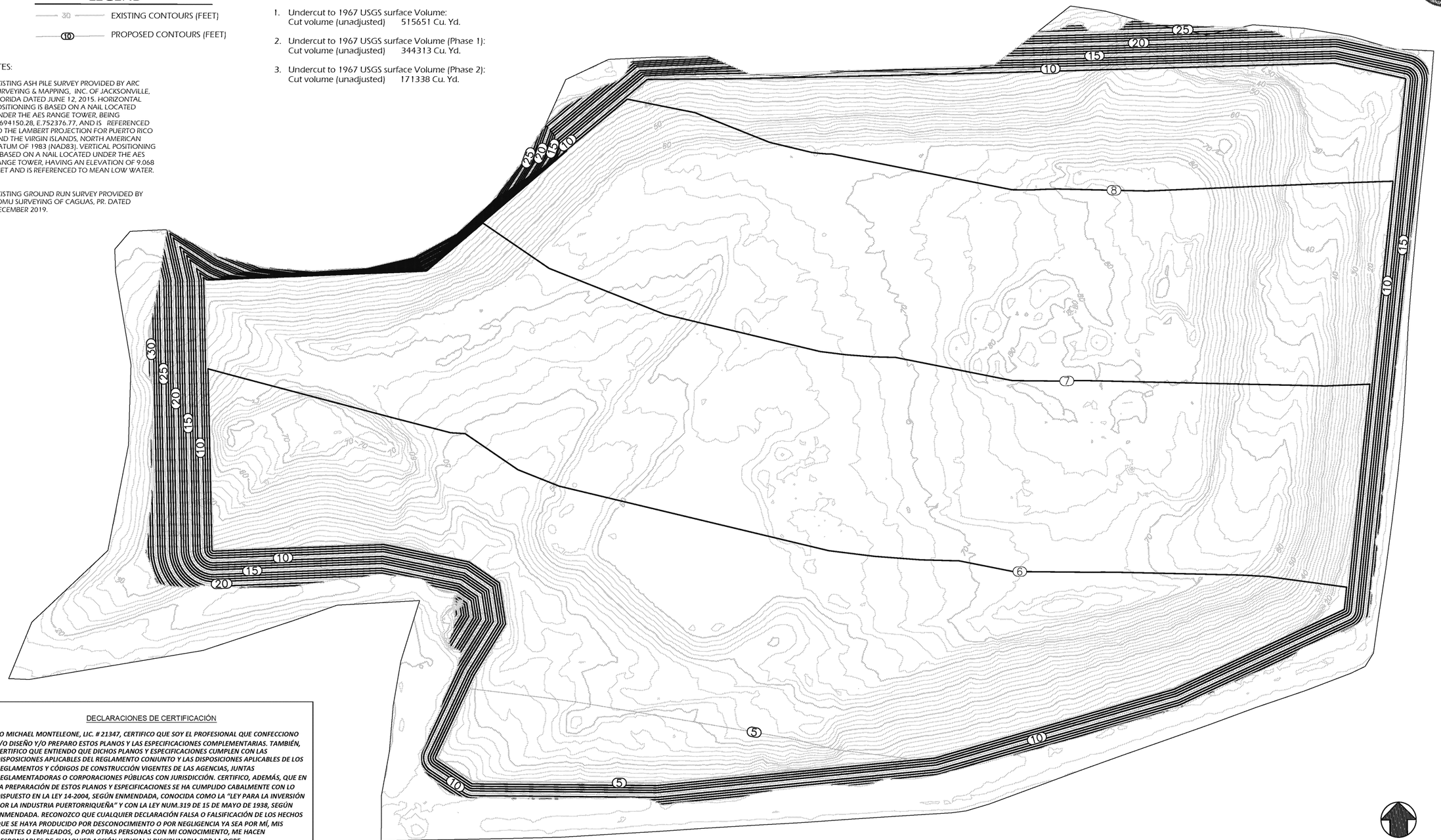

DECLARACIONES DE CERTIFICACIÓN

YO MICHAEL MONTELEONE, LIC. # 21347, CERTIFICO QUE SOY EL PROFESIONAL QUE CONFECCIONO Y/O DISEÑO Y/O PREPARO ESTOS PLANOS Y LAS ESPECIFICACIONES COMPLEMENTARIAS. TAMBIÉN, CERTIFICO QUE ENTIENDO QUE DICHOS PLANOS Y ESPECIFICACIONES CUMPLEN CON LAS DISPOSICIONES APLICABLES DEL REGLAMENTO CONJUNTO Y LAS DISPOSICIONES APLICABLES DE LOS REGLAMENTOS Y CÓDIGOS DE CONSTRUCCIÓN VIGENTES DE LAS AGENCIAS, JUNTAS REGLAMENTADORAS O CORPORACIONES PÚBLICAS CON JURISDICCIÓN. CERTIFICO, ADEMÁS, QUE EN LA PREPARACIÓN DE ESTOS PLANOS Y ESPECIFICACIONES SE HA CUMPLIDO CABALMENTE CON LO DISPUESTO EN LA LEY 14-2004, SEGÚN ENMENDADA, CONOCIDA COMO LA "LEY PARA LA INVERSIÓN POR LA INDUSTRIA PUERTORRIQUEÑA" Y CON LA LEY NUM.319 DE 15 DE MAYO DE 1938, SEGÚN ENMENDADA. RECONOZCO QUE CUALQUIER DECLARACIÓN FALSA O FALSIFICACIÓN DE LOS HECHOS QUE SE HAYA PRODUCIDO POR DESCONOCIMIENTO O POR NEGLIGENCIA YA SEA POR MÍ, MIS AGENTES O EMPLEADOS, O POR OTRAS PERSONAS CON MI CONOCIMIENTO, ME HACEN RESPONSABLES DE CUALQUIER ACCIÓN JUDICIAL Y DISCIPLINARIA POR LA OGPE.

REV.	DATE	DESCRIPTION	DRN	APP
2	10/28/20	REVISED GROUNDWATER TABLE.	SS	MJM
1	4/6/20	REVISED GRADING	SS	MJM
0	10/23	ISSUE FOR DRAFT	SS	MJM

PREPARED FOR:

AES Puerto Rico

AES - PR TOTAL ENERGY PLANT
GUAYAMA, PUERTO RICO

PREPARED BY:

OASIS CONSULTING SERVICES

45 WOODSTOCK STREET
ROSWELL, GEORGIA 30075
PHONE: (678) 739-2400 • FAX: (770) 552-5550

MICHAEL J. MONTELEONE
INGENIERO LICENCIADO
LIC. #21347
PUERTO RICO

SITE: AES - PR TOTAL ENERGY PLANT
GUAYAMA, PUERTO RICO

PROJECT: ASH CELL CONSTRUCTION PLAN

TITLE: STOCKPILE CUT PLAN

DESIGN BY:	S.SIN	DATE BY:	OCTOBER 2020
DRAWN BY:	S.SIN	PROJECT NO.:	153652
CHECKED BY:	M.J.MONTELEONE	FILE:	153652 AES F03s
REVIEWED BY:	M.J.MONTELEONE	SHEET NO.: 3 OF 7	REV.: 2
APPROVED BY:	M.J.MONTELEONE		

C:\Projects\AES\153652 AES\DRAWING\153652 AES F03s.dwg 2/11/2021 11:34 AM SAMUEL.SIN

LEGEND

- PROPOSED CONTOURS
- EXISTING CONTOURS (FEET)
- LIMITS OF LINER
- EDGE OF LINER MARKER

NOTES:

1. EXISTING ASH PILE SURVEY PROVIDED BY ARC SURVEYING & MAPPING, INC. OF JACKSONVILLE, FLORIDA DATED JUNE 12, 2015. HORIZONTAL POSITIONING IS BASED ON A NAIL LOCATED UNDER THE AES RANGE TOWER, BEING N.694150.28, E.752376.77, AND IS REFERENCED TO THE LAMBERT PROJECTION FOR PUERTO RICO AND THE VIRGIN ISLANDS, NORTH AMERICAN DATUM OF 1983 (NAD83). VERTICAL POSITIONING IS BASED ON A NAIL LOCATED UNDER THE AES RANGE TOWER, HAVING AN ELEVATION OF 9.068 FEET AND IS REFERENCED TO MEAN LOW WATER.

2. EXISTING GROUND RUN SURVEY PROVIDED BY ROMU SURVEYING OF CAGUAS, PR. DATED DECEMBER 2019.

OVERALL DESIGN FILL Volume
Base Surface CUT PLAN1
Comparison Surface PERIMETER TIEIN CELLS
Fill volume (unadjusted) 98916 Cu. Yd.

PERIMETER BERM FILL Volume
Base Surface CUT PLAN1
Comparison Surface PERIMETER TIEIN
Fill volume (unadjusted) 8550 Cu. Yd.

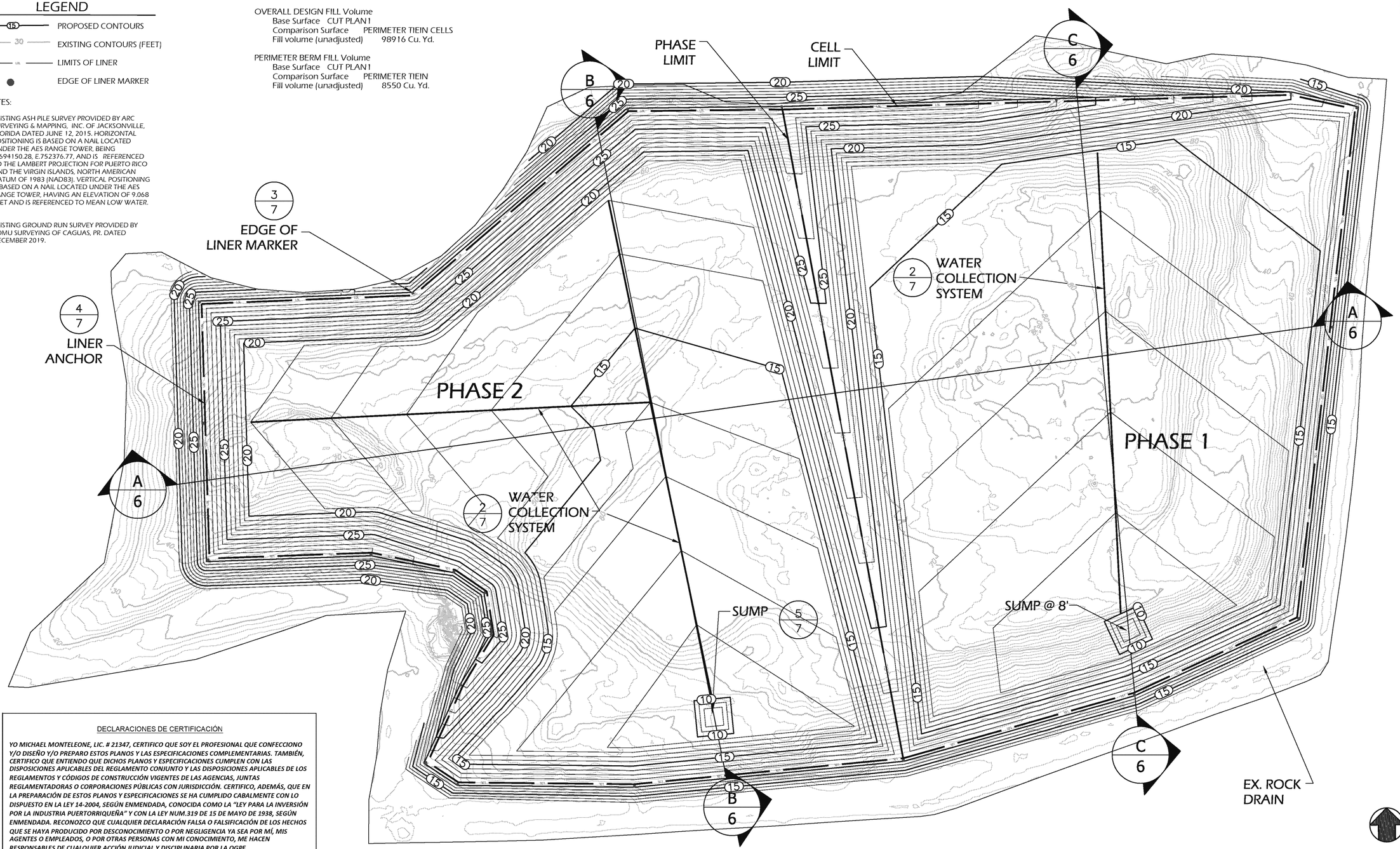

DECLARACIONES DE CERTIFICACIÓN

YO MICHAEL MONTELEONE, LIC. # 21347, CERTIFICO QUE SOY EL PROFESIONAL QUE CONFECCIONO Y/O DISEÑO Y/O PREPARO ESTOS PLANOS Y LAS ESPECIFICACIONES COMPLEMENTARIAS. TAMBIÉN, CERTIFICO QUE ENTIENDO QUE DICHOS PLANOS Y ESPECIFICACIONES CUMPLEN CON LAS DISPOSICIONES APLICABLES DEL REGLAMENTO CONJUNTO Y LAS DISPOSICIONES APLICABLES DE LOS REGLAMENTOS Y CÓDIGOS DE CONSTRUCCIÓN VIGENTES DE LAS AGENCIAS, JUNTAS REGLAMENTADORAS O CORPORACIONES PÚBLICAS CON JURISDICCIÓN. CERTIFICO, ADEMÁS, QUE EN LA PREPARACIÓN DE ESTOS PLANOS Y ESPECIFICACIONES SE HA CUMPLIDO CABALMENTE CON LO DISPUESTO EN LA LEY 14-2004, SEGÚN ENMENDADA, CONOCIDA COMO LA "LEY PARA LA INVERSIÓN POR LA INDUSTRIA PUERTORRIQUEÑA" Y CON LA LEY NUM.319 DE 15 DE MAYO DE 1938, SEGÚN ENMENDADA. RECONOZCO QUE CUALQUIER DECLARACIÓN FALSA O FALSIFICACIÓN DE LOS HECHOS QUE SE HAYA PRODUCIDO POR DESCONOCIMIENTO O POR NEGLIGENCIA YA SEA POR MÍ, MIS AGENTES O EMPLEADOS, O POR OTRAS PERSONAS CON MI CONOCIMIENTO, ME HACEN RESPONSABLES DE CUALQUIER ACCIÓN JUDICIAL Y DISCIPLINARIA POR LA OGPE.

REV.	DATE	DESCRIPTION	DRN	APP
2	10/28/20	REVISED GROUNDWATER TABLE.	SS	MJM
1	4/6/20	REVISED GRADING	SS	MJM
0	10/23	ISSUE FOR DRAFT	SS	MJM

PREPARED FOR: AES Puerto Rico — AES - PR TOTAL ENERGY PLANT GUAYAMA, PUERTO RICO

PREPARED BY: OASIS CONSULTING SERVICES
45 WOODSTOCK STREET
ROSWELL, GEORGIA 30075
PHONE: (678) 739-2400 • FAX: (770) 552-5550

MICHAEL J. MONTELEONE INGENIERO LICENCIADO LIC. #21347 PUERTO RICO

SITE: AES - PR TOTAL ENERGY PLANT GUAYAMA, PUERTO RICO

PROJECT: ASH CELL CONSTRUCTION PLAN

TITLE: BASE GRADING PLAN

DESIGN BY:	S.SIN	DATE BY:	OCTOBER 2020
DRAWN BY:	S.SIN	PROJECT NO.:	153652
CHECKED BY:	M.J.MONTELEONE	FILE:	153652 AES F03s
REVIEWED BY:	M.J.MONTELEONE	SHEET NO.:	4 OF 7
APPROVED BY:	M.J.MONTELEONE	REV.:	2

C:\Project\AES\153652-AES\DRAWING\153652-AES F03s.dwg, 2/1/2021 11:34 AM, SAMUEL.SIN

LEGEND

- (15) PROPOSED CONTOURS
- 30 EXISTING CONTOURS (FEET)
- L.O.L. LIMITS OF LINER

NOTES:

1. EXISTING ASH PILE SURVEY PROVIDED BY ARC SURVEYING & MAPPING, INC. OF JACKSONVILLE, FLORIDA DATED JUNE 12, 2015. HORIZONTAL POSITIONING IS BASED ON A NAIL LOCATED UNDER THE AES RANGE TOWER, BEING N.694150.28, E.752376.77, AND IS REFERENCED TO THE LAMBERT PROJECTION FOR PUERTO RICO AND THE VIRGIN ISLANDS, NORTH AMERICAN DATUM OF 1983 (NAD83). VERTICAL POSITIONING IS BASED ON A NAIL LOCATED UNDER THE AES RANGE TOWER, HAVING AN ELEVATION OF 9.068 FEET AND IS REFERENCED TO MEAN LOW WATER.

2. EXISTING GROUND RUN SURVEY PROVIDED BY ROMU SURVEYING OF CAGUAS, PR. DATED DECEMBER 2019.

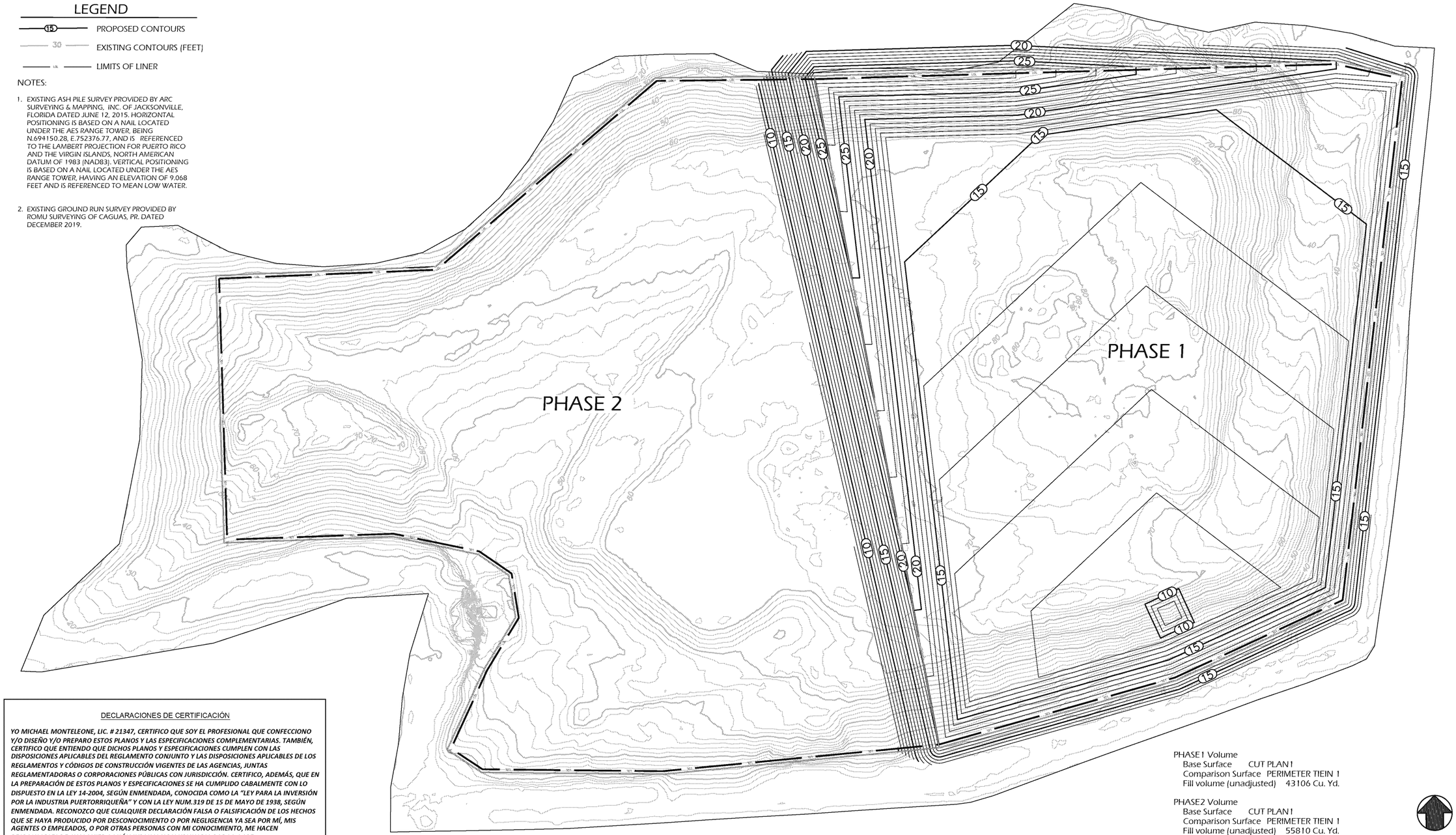

PHASE1 Volume
Base Surface CUT PLAN1
Comparison Surface PERIMETER TIEIN 1
Fill volume (unadjusted) 43106 Cu. Yd.

PHASE2 Volume
Base Surface CUT PLAN1
Comparison Surface PERIMETER TIEIN 1
Fill volume (unadjusted) 55810 Cu. Yd.

0 30' 60'
SCALE IN FEET

DECLARACIONES DE CERTIFICACIÓN

YO MICHAEL MONTELEONE, LIC. # 21347, CERTIFICO QUE SOY EL PROFESIONAL QUE CONFECCIONO Y/O DISEÑO Y/O PREPARO ESTOS PLANOS Y LAS ESPECIFICACIONES COMPLEMENTARIAS. TAMBIÉN, CERTIFICO QUE ENTIENDO QUE DICHOS PLANOS Y ESPECIFICACIONES CUMPLEN CON LAS DISPOSICIONES APLICABLES DEL REGLAMENTO CONJUNTO Y LAS DISPOSICIONES APLICABLES DE LOS REGLAMENTOS Y CÓDIGOS DE CONSTRUCCIÓN VIGENTES DE LAS AGENCIAS, JUNTAS REGLAMENTADORAS O CORPORACIONES PÚBLICAS CON JURISDICCIÓN. CERTIFICO, ADEMÁS, QUE EN LA PREPARACIÓN DE ESTOS PLANOS Y ESPECIFICACIONES SE HA CUMPLIDO CABALMENTE CON LO DISPUESTO EN LA LEY 14-2004, SEGÚN ENMENDADA, CONOCIDA COMO LA "LEY PARA LA INVERSIÓN POR LA INDUSTRIA PUERTORRIQUEÑA" Y CON LA LEY NUM.319 DE 15 DE MAYO DE 1938, SEGÚN ENMENDADA. RECONOZCO QUE CUALQUIER DECLARACIÓN FALSA O FALSIFICACIÓN DE LOS HECHOS QUE SE HAYA PRODUCIDO POR DESCONOCIMIENTO O POR NEGLIGENCIA YA SEA POR MÍ, MIS AGENTES O EMPLEADOS, O POR OTRAS PERSONAS CON MI CONOCIMIENTO, ME HACEN RESPONSABLES DE CUALQUIER ACCIÓN JUDICIAL Y DISCIPLINARIA POR LA OGPE.

REV.	DATE	DESCRIPTION	DRN	APP
2	10/28/20	REVISED GROUNDWATER TABLE.	SS	MJM
1	4/6/20	REVISED GRADING	SS	MJM
0	10/23	ISSUE FOR DRAFT	SS	MJM

PREPARED FOR:
AES Puerto Rico
AES - PR TOTAL ENERGY PLANT
GUAYAMA, PUERTO RICO

PREPARED BY:
OASIS CONSULTING SERVICES
45 WOODSTOCK STREET
ROSWELL, GEORGIA 30075
PHONE: (678) 739-2400 • FAX: (770) 552-5550

MICHAEL J. MONTELEONE
INGENIERO LICENCIADO
LIC. #21347
PUERTO RICO

SITE: AES - PR TOTAL ENERGY PLANT GUAYAMA, PUERTO RICO

PROJECT: ASH CELL CONSTRUCTION PLAN

TITLE: PHASE 1 BASE GRADING PLAN

DESIGN BY:	S.SIN	DATE BY:	OCTOBER 2020
DRAWN BY:	S.SIN	PROJECT NO.:	153652
CHECKED BY:	M.J.MONTELEONE	FILE:	153652 AES F03s
REVIEWED BY:	M.J.MONTELEONE	SHEET NO.: 5 OF 7	REV.: 2
APPROVED BY:	M.J.MONTELEONE		

C:\Projects\AES\153652 AES\PRAWING\153652 AES F03s.dwg, 2/11/2021 11:34 AM, SAMUEL SIN

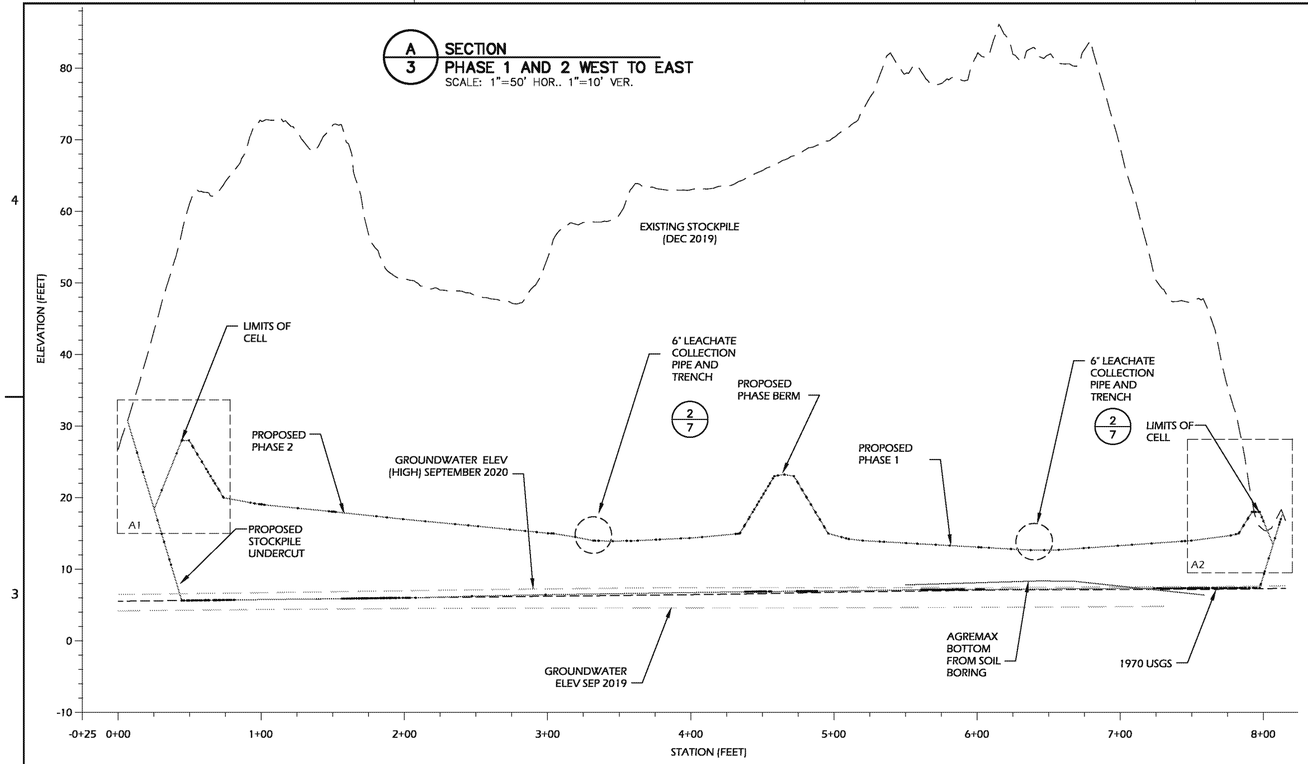

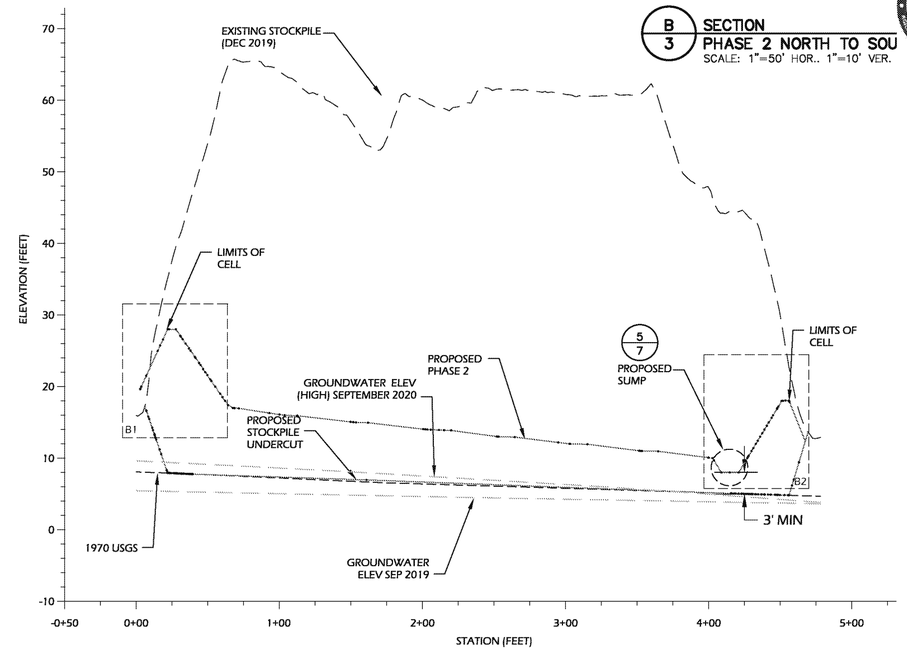

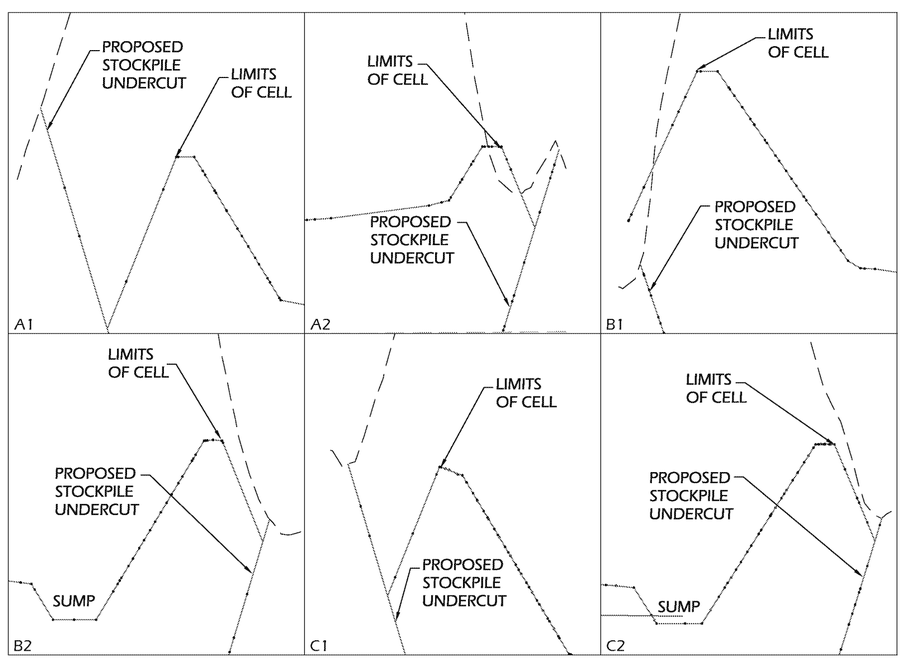

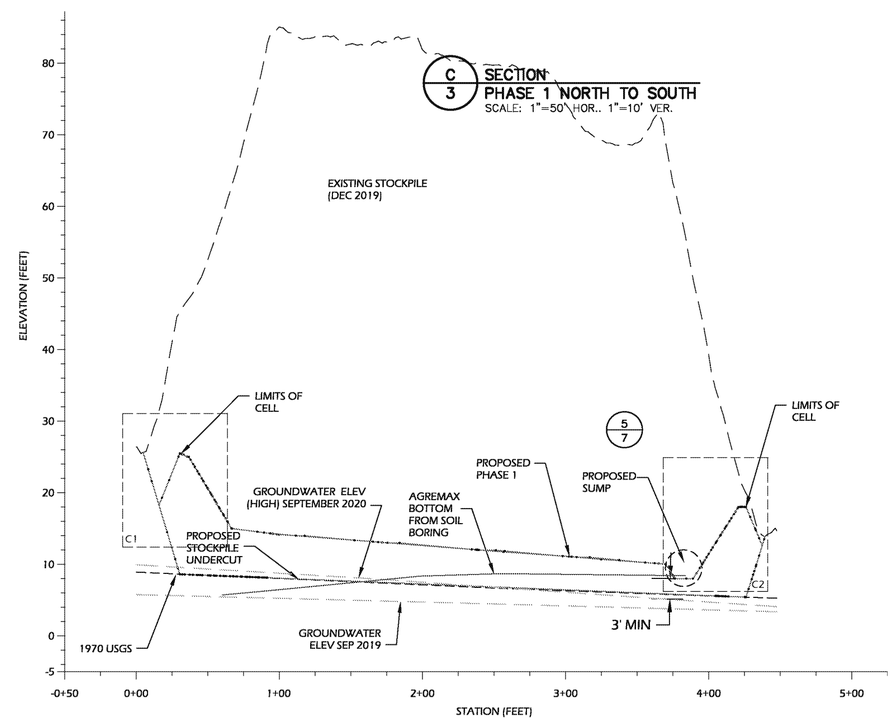

DECLARACIONES DE CERTIFICACIÓN

YO MICHAEL MONTELEONE, LIC. # 21347, CERTIFICO QUE SOY EL PROFESIONAL QUE CONFECCIONO Y/O DISEÑO Y/O PREPARO ESTOS PLANOS Y LAS ESPECIFICACIONES COMPLEMENTARIAS. TAMBIÉN, CERTIFICO QUE ENTIENDO QUE DICHOS PLANOS Y ESPECIFICACIONES CUMPLEN CON LAS DISPOSICIONES APLICABLES DEL REGLAMENTO CONJUNTO Y LAS DISPOSICIONES APLICABLES DE LOS REGLAMENTOS Y CÓDIGOS DE CONSTRUCCIÓN VIGENTES DE LAS AGENCIAS, JUNTAS REGLAMENTADORAS O CORPORACIONES PÚBLICAS CON JURISDICCIÓN. CERTIFICO, ADEMÁS, QUE EN LA PREPARACIÓN DE ESTOS PLANOS Y ESPECIFICACIONES SE HA CUMPLIDO CABALMENTE CON LO DISPUESTO EN LA LEY 14-2004, SEGÚN ENMENDADA, CONOCIDA COMO LA "LEY PARA LA INVERSIÓN POR LA INDUSTRIA PUERTORRIQUEÑA" Y CON LA LEY NUM.319 DE 15 DE MAYO DE 1938, SEGÚN ENMENDADA. RECONOZCO QUE CUALQUIER DECLARACIÓN FALSA O FALSIFICACIÓN DE LOS HECHOS QUE SE HAYA PRODUCIDO POR DESCONOCIMIENTO O POR NEGLIGENCIA YA SEA POR MÍ, MIS AGENTES O EMPLEADOS, O POR OTRAS PERSONAS CON MI CONOCIMIENTO, ME HACEN RESPONSABLES DE CUALQUIER ACCIÓN JUDICIAL Y DISCIPLINARIA POR LA OGPE.

REV.	DATE	DESCRIPTION	DRN	APP
2	10/28/20	REVISED GROUNDWATER TABLE.	SS	MJM
1	4/6/20	REVISED GRADING	SS	MJM
0	10/23	ISSUE FOR DRAFT	SS	MJM

PREPARED FOR: AES Puerto Rico
AES - PR TOTAL ENERGY PLANT
GUAYAMA, PUERTO RICO

PREPARED BY: OASIS CONSULTING SERVICES
45 WOODSTOCK STREET
ROSWELL, GEORGIA 30075
PHONE: (678) 739-2400 • FAX: (770) 552-5550

MICHAEL J. MONTELEONE INGENIERO LICENCIADO Lic. #21347 PUERTO RICO

SITE: AES - PR TOTAL ENERGY PLANT GUAYAMA, PUERTO RICO

PROJECT: ASH CELL CONSTRUCTION PLAN

TITLE: LANDFILL CROSS SECTIONS

DESIGN BY:	S.SIN	DATE BY:	OCTOBER 2020
DRAWN BY:	S.SIN	PROJECT NO.:	153652
CHECKED BY:	M.J.MONTELEONE	FILE:	153652 AES F03s
REVIEWED BY:	M.J.MONTELEONE	SHEET NO.: 6 OF 7	REV.: 2
APPROVED BY:	M.J.MONTELEONE		

C:\Project\AES\153652 AES\DRAWING\153652 AES F03s.dwg, 2/11/2021 11:34 AM, SAMUEL SIN

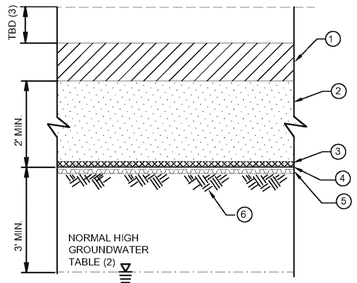

1. DYE LAYER TO 12 INCHES OF AGREMAX (WARNING LAYER)
2. SACRIFICIAL LAYER (RECOMPACTED AGREMAX OR ALTERNATIVE)
3. GEOCOMPOSITE
4. 60 MIL HDPE LINER
5. GCL
6. MIN. 1 FT RECOMPACTED EXISTING SUB-BASE OR IMPORTED MATERIAL SUITABLE TO SUPPORT COMPOSITE LINER (GCL & FML)

1/4 DETAIL (TYP.) COMPOSITE LINER
SCALE: N.T.S.

NOTES:
(1) BOTH GCL & DRAINAGE LAYER TO BE VERIFIED COMPATIBLE WITH AES SUPPLIED LEACHATE AND CHARACTERIZATION DATA FOR AGREMAX.
(2) WATER TABLE ELEVATION DETERMINED BY AES (SEPTEMBER 2020) VIA TEST PIT INVESTIGATIONS WITH RESULTS PROVIDED TO OASIS IN SEPTEMBER 2020. REQUIRED 3 FT MIN. VERTICAL SEPARATION BETWEEN INSTALLED ELEVATION OF SEPARATION LAYER (LINER SYSTEM) AND MAX. EXPECTED WATER TABLE.
(3) VARIES BASED ON SEPARATION LAYER INSTALL DEPTH.

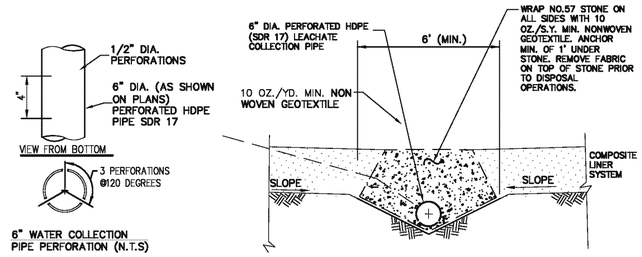

2/4 6" WATER COLLECTION PIPE & TRENCH
SCALE: N.T.S.

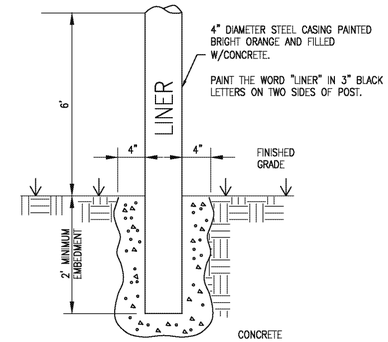

3/4 EDGE OF LINER MARKER
SCALE: N.T.S.

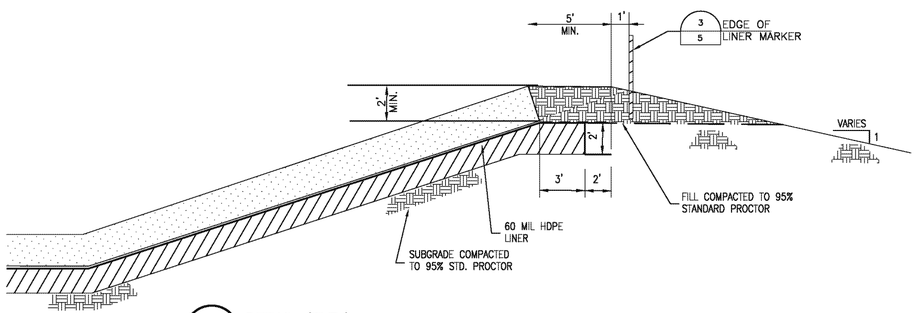

4/4 DETAIL (TYP.) LINER ANCHOR
SCALE: N.T.S.

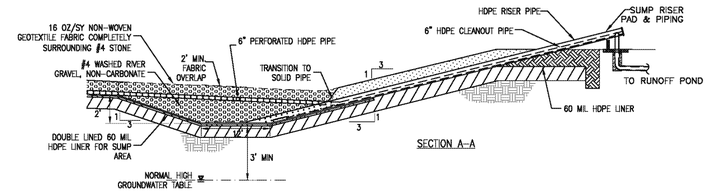

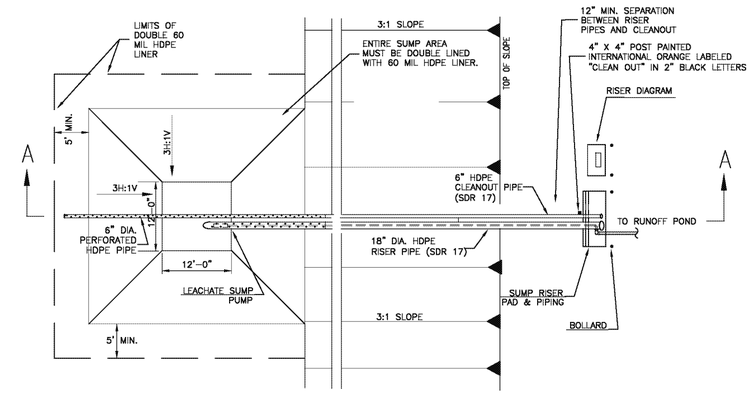

5/4 DETAILS (TYP) WATER COLLECTION SUMP
SCALE: N.T.S.

DECLARACIONES DE CERTIFICACIÓN

YO MICHAEL MONTELEONE, LIC. # 21347, CERTIFICO QUE SOY EL PROFESIONAL QUE CONFECCIONO Y/O DISEÑO Y/O PREPARO ESTOS PLANOS Y LAS ESPECIFICACIONES COMPLEMENTARIAS. TAMBIÉN, CERTIFICO QUE ENTIENDO QUE DICHOS PLANOS Y ESPECIFICACIONES CUMPLEN CON LAS DISPOSICIONES APLICABLES DEL REGLAMENTO CONJUNTO Y LAS DISPOSICIONES APLICABLES DE LOS REGLAMENTOS Y CÓDIGOS DE CONSTRUCCIÓN VIGENTES DE LAS AGENCIAS, JUNTAS REGLAMENTADORAS O CORPORACIONES PÚBLICAS CON JURISDICCIÓN. CERTIFICO, ADEMÁS, QUE EN LA PREPARACIÓN DE ESTOS PLANOS Y ESPECIFICACIONES SE HA CUMPLIDO CABALMENTE CON LO DISPUESTO EN LA LEY 14-2004, SEGÚN ENMENDADA, CONOCIDA COMO LA "LEY PARA LA INVERSIÓN POR LA INDUSTRIA PUERTORRIQUEÑA" Y CON LA LEY NUM.319 DE 15 DE MAYO DE 1938, SEGÚN ENMENDADA. RECONOZCO QUE CUALQUIER DECLARACIÓN FALSA O FALSIFICACIÓN DE LOS HECHOS QUE SE HAYA PRODUCIDO POR DESCONOCIMIENTO O POR NEGLIGENCIA YA SEA POR MÍ, MIS AGENTES O EMPLEADOS, O POR OTRAS PERSONAS CON MI CONOCIMIENTO, ME HACEN RESPONSABLES DE CUALQUIER ACCIÓN JUDICIAL Y DISCIPLINARIA POR LA OGPE.

REV.	DATE	DESCRIPTION	DRN	APP
2	10/28/20	REVISED GROUNDWATER TABLE.	SS	MJM
1	4/6/20	REVISED GRADING	SS	MJM
0	10/23	ISSUE FOR DRAFT	SS	MJM

PREPARED FOR: AES Puerto Rico
AES - PR TOTAL ENERGY PLANT
GUAYAMA, PUERTO RICO

PREPARED BY: OASIS CONSULTING SERVICES
45 WOODSTOCK STREET
ROSWELL, GEORGIA 30075
PHONE: (678) 739-2400 • FAX: (770) 552-5550

MICHAEL J. MONTELEONE INGENIERO LICENCIADO LIC. #21347 PUERTO RICO

SITE: AES - PR TOTAL ENERGY PLANT GUAYAMA, PUERTO RICO

PROJECT: ASH CELL CONSTRUCTION PLAN

TITLE: DETAILS

DESIGN BY:	S.SIN	DATE BY:	OCTOBER 2020
DRAWN BY:	S.SIN	PROJECT NO.:	153652
CHECKED BY:	M.J.MONTELEONE	FILE:	153652 AES F03s
REVIEWED BY:	M.J.MONTELEONE	SHEET NO.: 7 OF 7	REV.: 2
APPROVED BY:	M.J.MONTELEONE		

C:\Project\AES\153652 AES\PRW\RW\153652 AES F03s.dwg, 2/11/2021 11:39:AM, SAMUEL.SIN

Message

From: Christine Santillana [csantillana@earthjustice.org]
Sent: 8/3/2021 8:02:47 PM
To: Huggins, Richard [Huggins.Richard@epa.gov]
CC: Jose Rivera [rstgo2@gmail.com]; levans@earthjustice.org
Subject: AES-PR Liner Project - Translated Documents
Attachments: AES-PR EA Oct 2020 (1).pdf; AES-PR Guayama Pre-Consultation Figures Appendices.pdf

Hi Richard,

I hope this email finds you well.

Per your request during our call on July 12, please find attached the translated environmental assessment form for AES-PR's construction liner project, the pre-consultation request form to the Permits Management Office, and figures/appendices for the project.

We look forward to hearing from you regarding next steps.

Best,
Christine

CHRISTINE SANTILLANA (she/her/hers)
Legislative Counsel
EARTHJUSTICE
1001 G St., NW, Floor 10
Washington, DC 20001
T: 202.797.4315
E: csantillana@earthjustice.org

CARIBBEAN ARCHITECTS & ENGINEERS

AES Puerto Rico

ENVIRONMENTAL ASSESSMENT

AGREMAX™ Staging Area Liner Project

AES Puerto Rico, L.P.

Guayama, PR

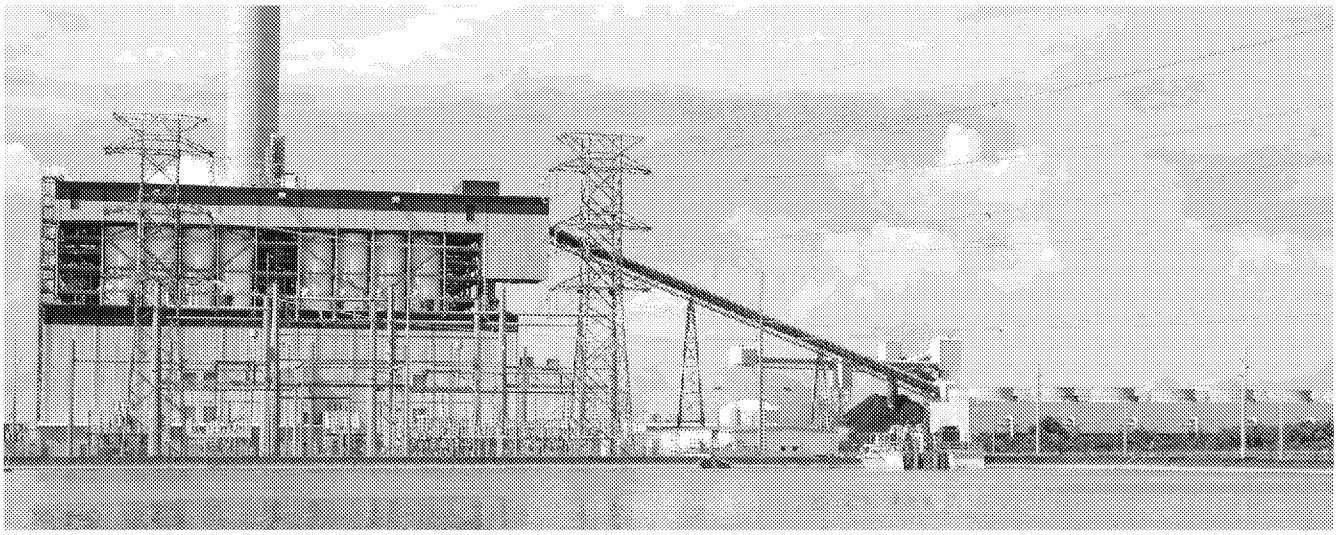

ENVIRONMENTAL ASSESSMENT FORM

Project Name: ***AGREMAX™ Staging Area Liner Project***

I. Introduction or Preface

A. Proposing agency and any other participating agency:

Permits Management Office (OGPe, *in Spanish*)

B. Private entity that promotes the action, if not the proposing agency itself

1. Name of Proponent: AES Puerto Rico, L.P.
2. Postal Address: P.O. Box 1890, Guayama, Puerto Rico 00785
3. Phone: (787) 866-8117

C. Title of the Proposed Action.

1. Project Name: AGREMAX™ Staging Area Liner Project
2. Project Address: Carretera Número 3, Km. 142, Barrio Puente Jobos, Guayama, P.R.
3. Land Capacity: Three (3) different plots of 119.4902; 88.6138; and 30.8764 chords[1] (according to deeds).
4. Project Capacity: Approximately seven (7) acres (28,327 square meters).

   If future expansions are possible, please indicate land capacity: N / A

D. Responsible official of the proposing agency.

1. Name: Ing. Gabriel Hernández, Assistant Secretary
   Permit Management Office
2. Address: P.O. Box 41179, San Juan, PR 00940-1179
3. Phone: (787) 721-8282

E. One paragraph summary regarding the matter dealt with in the environmental document

The purpose of the project is to design and install a revetment or liner to prevent direct contact of aggregate AGREMAX™ with the soil, in its storage area in existing facilities. The project is a corrective measure for compliance with federal regulations on the Disposal and Management of Coal Combustion Residues issued by the Environmental Protection Agency (EPA). The proposed project area consists of approximately seven (7) acres. The proposed project will be built in two (2) phases, and will last approximately six (6) months.

F. Document circulation date, if applicable: October 2020

1 A "chord" is an old Spanish unit to measure area and length. 1 chord = 0.9712219102325 acre.

II. Table of Contents or Index

Matter	Page Number
Proposing agency and any other participating agency	2
Private entity that promotes the action	2
Title of the proposed action	2
Responsible official	2
Environmental document identification	2
Document circulation date	2
Summary	4
Description, purpose and justification for proposed action	5
Environmental description	7
Foreseeable impacts to the environment caused by the proposed action	8
Requirements, recommendations and comments of the consulted agencies	9
Agencies to which the document will be circulated	9
Environmental Impact Assessment	10
Proposed location with its physical and biotic components	10
Flora and fauna	11
Soil types and characteristics	11
Geological formations	11
Natural and artificial systems	12
Proposed zoning and land use for the project	15
Body(s) of water to be impacted	16
Drinking water well(s) within a 460-meter radius	17
Floodplain and area's maximum flood level	17
Available infrastructure	18
Nearest residential and quiet area	19
Public or private drinking water connections	19
Ecologically sensitive areas	19
Project need	20
Total project cost	20
Earthworks	20
Deforestation, erosion and sediment deposit	21
Fugitive dust	21
Noise levels and light pollution	22
Protection measures for natural systems	23
Estimated water consumption and supply	24
Estimated volumen of wastewater to be generated	24
Storage tanks	25
Precipitation runoff	25
Dredging	25
Solid waste (hazardous and non-hazardous)	26
Sources of atmospheric emission	26
Electric power demand	27
Traffic	28
Environmental impact assessment and mitigation measures	28
Finding of no significant impact (FONSI) justification	29

III. Summary and Explanatory Memorandum

A. Summary

AES Corporation (AES), the parent company, is a corporation organized and existing under the General Corporation Law of the State of Delaware. AES is a global power and energy companies, which is on the Fortune 500 list. It provides sustainable and affordable energy to 15 countries through a portfolio of diverse distribution businesses, as well as thermal and renewable generation facilities.

AES began developing AES Puerto Rico, L.P. (AES-PR) in 1993 and in November 2002 it inaugurated its plant in the town of Guayama, from where it generates and distributes electricity through a 25-year contract with the Electric Power Authority. The location of this plant is Carretera Número 3, Km. 142 in Barrio Puente Jobos, Municipality of Guayama.

The AES-PR plant in Guayama uses technology known as circulating fluidized beds (CFBs). This allows the plant to process coal in a manner consistent with environmental protection while generating reliable and affordable electricity. The plant is classified as a zero liquid discharge for wastewater. The AES-PR plant is considered zero discharge because it reuses its process' waters without discharging them either to PRASA (Puerto Rico Aqueducts and Sewers Authority) or to bodies of water. Using PRASA's treatment plant's waters is another benefit maintained at the plant, as it prevents PRASA treated waters from being discharged into the Caribbean Sea. The AES-PR plant produces 454 megawatts, representing approximately 17% of the electricity consumed on the island. It is important to mention that the production of electric power will not be increased as part of this project.

The ashes that result from coal combustion are deposited in storage silos, they then go through various segregation and control systems via a mechanical mixer system, and finally they are homogenized proportionally as follows: 80% light ash, 20% bottom ash and approximately 30% to 40% water injection. Once the materials are mixed, there is an exothermic reaction process due to the pozzolan properties of the light ash and the residual limestone material inherent within the ash, leaving a manufactured aggregate similar to naturally-ocurring aggregates. The manufactured aggregate, known as AGREMAX™, is then transported to the storage area by an enclosed conveyor only to be lifted and transported with heavy equipment and trucks to the AGREMAX™ Temporary Storage Area (Storage Area).

EPA adopted the final Rule to dispose Coal Combustion Residues (CCR) Rule from Electric Utilities, titled Hazardous and Solid Waste Management System; Disposal of Coal Combustion Residuals from Electric Utilities, Volume 80 Federal Register, 21302 (April 17, 2015) (promulgating Title 40, Section 257.61 of the Code of Federal Regulations [CFR]; Volume 83. Federal Register 36435 (7/30/2018) (amending 40 CFR Section 257.61) (Federal RCC Rule or "CCR Rule"). Its standards established national regulations in order to have a complete set of requirements for the safe handling and disposal of coal combustion waste from coal-fired power plants. The rule also includes requirements for monitoring, evaluating and implementing corrective measures regarding possible impacts found in groundwater that may have been caused by CCRs. In order to prevent future emissions, to remedy any emissions and to restore the affected area to its original conditions, an evaluation of the corrective measures is required.

AES-PR implemented groundwater monitoring following the EPA's CCR Rule requirements. Groundwater detection monitoring, which was completed in October 2017, evaluated the presence and concentration of Appendix IV components specified in the CCR Rule. Of the 15 parameters being evaluated (Appendix III and Appendix IV of the CCR Rule), three of them (molybdenum, lithium, and selenium) were detected at statistically significant levels (SSL) above each one's respective Ground Water Protection Standards (GWPS) established for the Storage Area. The CCR Rule requires that corrective action assessment prevents future impacts, repair or minimize any found or future impacts, and reduce the impacts found below applicable GWPS. The CCR Rule, therefore, requires the selection and implementation of a corrective action.

B. Description, Purpose and Justification of the Proposed Action

The proposed project is identified as AGREMAX™ Staging Area Liner and it will be produced at the AES-PR facilities in Guayama, specifically in the area known as AGREMAX™ Staging Area. The purpose of the project is to design and install a liner to prevent direct contact between AGREMAX™ and the ground in the facility's AGREMAX™ Staging Area. AGREMAX™ is an aggregate manufactured from coal combustion products. It consists of a mixture of 80% Light Ash, 20% Heavy Ash and 30% water weight. AGREMAX™ is produced in a kneader, mixing light and heavy ash with water. Technical information for AGREMAX™ is included in **Appendix 1**.

The proposed project area is approximately seven (7) acres. **Appendix 2** identifies the approximate area of the proposed project in a diagram. In addition, **Figure 1** shows an aerial photo also identifying the the proposed project area.

The proposed project will be constructed in two (2) phases, in such a way that when half of the preparation area is developing, the other half of the area is used to store AGREMAX™, temporarily. The preliminary blueprints of the proposed project are in **Appendix 3**, including the phase-segmentation of the project. AES-PR proposal is to dig and remove the AGREMAX™ stored during each phase in order to reach the natural surface level of the soil beneath the preparation area that existed previous to each work phase. No upper or lower structures will be demolished in the project area, there is only AGREMAX™ material stored. The removal of the material stored is estimated to average four (4) to six (6) feet deep. After completing Phase 1 of the liner system installation, the AGREMAX™ material from to be developed in Phase 2 area will be moved to Phase 1 area; this as part of the construction process to minimize project time and costs. When the removal of material for Phase 2 is complete, as the project approaches the bottom layer, construction for that phase may begin. **Appendix 4** contains the technical specifications of the liner to be installed. This liner will meet specific requirements included in CCR Rule (§257.70 (b) or §257.70 (c)), and will be installed following requirements and documentation established by this federal regulation.

As indicated above, the temporarily stored AGREMAX™ will be excavated and removed within each phase until it reaches the natural level of the soil beneath the preparation area. Once the natural level of the soil is reached, it will be necessary to discharge approximately 173,600 cubic yards (132,726 cubic meters) of backfill material in the project area prior to commencing the liner installation process. This material will be purchased from a private quarry with all the necessary permits in force.

To manage rainwater infiltration and prevent/minimize percolation from rainwater reaching the groundwater, pipes will be installed in the Storage Area using pumps to discharge them into the Coal Pile Runoff Pond in AES-PR. This process will be part of the proposed project.

The main purpose of the proposed project is to prevent direct contact of AGREMAX™ with the soil, thus avoiding the impact that rain or spray water that percolates in the area may have, as

discussed in the AES-PR document Corrective Measures Evaluation, prepared by the consulting firm Haley & Aldrich, Inc, and found on the AES-Puerto Rico website: https://aespuertorico.com/wp-content/uploads/2019/12/2019_9_13-AES-PR-Guayama-CMA-Final.for-translation_spa_Final-revised-120519-.1.pdf

This publicly accessible website contains information for owners of facilities where CCR is managed, regarding CCR Rule implementation as required by the EPA.

As part of the project, if necessary, an area used as temporary construction facilities will be built. In this area, trailers used as offices and warehouses will be installed during the construction phase, and water and electricity utilities will be connected to them. Parking zones will be designated as part of these temporary facilities. In addition, portable toilet units will be used.

C. Environmental Description

The proposed project will be executedwithin the existing facilities of the AES-Puerto Rico plant, located on Carretera Número 3, Km. 142 in the Puente Jobos neighborhood of the Municipality of Guayama. North of AES-PR is the old TAPI facility; to the south, the Las Mareas port area; to the east, the old Chevron-Phillips petrochemical plant; and to the west, the AES Ilumina solar energy farm. This location is shown in the Topographic Quadrangle of Central Aguirre, from the United States Department of Interior (DOI) and United States Geological Survey (USGS) (**Figure 2**), photo revised in 2018. The area to be occupied by the proposed project will be approximately seven (7) acres (28,327 square meters).

The Lambert coordinates for the location of the proposed project are Latitude 17.94463280 and Longitude -66.15223590. The property's cadastre number is 441-000-008-13. This information is shown on the Puerto Rico Municipal Revenue Collection Center (CRIM) map, included in **Figure 3**.

The area where the proposed project is planned to be built is located on Map Number 72000C2110J, from FEMA's Recommended Base Flood Elevation Maps. This map has an effective date of April 13, 2018. **Figure 4** contains a copy of the map. According to this map, part of the ground where the project will be completed is in the AE Zone and the flood levels are 3.4 and 3 meters above the Mean Sea Level. The following is the definition for the

mentioned zone of the proposed project area, according to the Regulation on Special Flood Hazard Areas (Planning Regulation No. 13) seventh revision in force on January 7, 2010.

Zone AE: Special flood risk area with a recurrence interval of 100 years, determined by specific methods and for which base flood elevations are indicated. Depending on the scope of the study, determination of the Greater Channel may be included.

According to data from the Natural Resources Conservation Service (NRCS), there are two types of soil in the area where the proposed project will be carried out. One is identified as Poncena clay (Po), and the other as Vayas silty clay, frequently flooded (Vc).

According to the Topographical Quadrangle from Central Aguirre , Puerto Rico (**Figure 6**), from the USGS, Miscellaneous Map I-318 of 1960, prepared by Henry L. Berryhill Jr., in the area where the project is located there is a type of geological formation called Alluvial Fan (Qf).

D. Foreseeable Impacts to the Environment Caused by the Proposed Action

Summarized below are the foreseeable environmental impacts due to the construction and operation of the proposed action.

- Electricity demand - approximately 12 kW during construction, expected to be obtained from electricity generators. There will be no increase demand in electricity during operations. The facility produces and supplies its own electricity.
- Drinking water consumption - approximately 30,300 GPD during construction. Approximately 30,000 GPD for construction works and an estimated 30,000 GPD of industrial water used to control fugitive dust during construction. Water will be obtained from the Patillas Canal and tank-trucks will be used. There will be no increase in drinkable water consumption during the operation of the proposed project.
- Wastewater discharge - there will be no increase in wastewater discharge during operation. The project will not create new jobs, and the plant is classified as a zero process water discharge plant.
- Earthworks - as part of the proposed project, approximately 173,600 cubic yards (132,726 cubic meters) of fill and approximately 700 cubic yards (535.19 cubic meters) of cut will be carried out as earthwork.

- Non-hazardous solid waste - approximately 520 cubic yards are estimated to be generated during construction, and no generation of non-hazardous solid waste is anticipated during operation.
- Increase in vehicular flow from the movement of fill material trucks is expected during construction. No increase in traffic is expected during project operation.
- Fugitive dust - fugitive dust emissions will be generated during construction activities of the proposed project, this due to the movement of the AGREMAX™, excavations for the pipeline installation and the filling activity. However, it is not expected that the construction phase of the proposed project will have a significant impact on air quality in the area.

These impacts will not be significant because, in compliance with permit conditions, AES-PR will take the corresponding measures to minimize and prevent any significant adverse impact during the construction phase of the project. AES-PR is committed with environmental protection. Therefore, the design of this project contemplates minimizing or preventing environmental impacts in its construction and operation phases.

In the following sections these issues are discussed in more detail as well as the measures taken to ensure that the proposed action does not result in a significant environmental impact.

E. Requirements, Recommendations and Comments of the Consulted Agencies

On March 12, 2020, a meeting was held at the Permit Management Office (OGPe, in Spanish) to discuss a Pre-Consultation requested as part of the project, which is 2020-304207-PCD-006243. The following officials from that agency were present at that meeting: Iliana Garay, Ildefonso Ortiz and Jaime Green. Agency staff were presented with the project.

At present, there are no comments from any agency regarding the proposed project. The approach to the consulted agencies has been for the purpose of obtaining information to complete the Environmental Assessment. The Department of Natural and Environmental Resources (DNER) was consulted in order to identifying drinking water wells in the municipality of Guayama, but due to the situation of the COVID-19 pandemic, we have not obtained results.

F. Agencies to which the Environmental Document Will Be Circulated

For this document, the proposing agency is the OGPe, which is under the Department of Economic Development and Commerce of Puerto Rico. As part of the process to obtain an environmental compliance, an Environmental Recommendation (REA, in Spanish) will be requested from the OGPe. The REA request will be evaluated by the Environmental Compliance Evaluation Division (DECA, in Spanish), which is the office in charge of evaluating and processing all environmental documents filed with the OGPe. Agencies to which the REA will be sent shall be determined by DECA. Once the REA is issued by DECA, via the OGPe, the final Environmental Assessment (EA) may be filed, at which time comments from the consulted agencies will be received and incorporated, if necessary.

G. Significant Environmental Impact or No Significant Environmental Impact Determination

In order to analyze the possible impact on the environment of the proposed project, and to determine the measures that should be taken to minimize its effect, if any, this EA was prepared following requirements of the Regulation for the Environmental Assessment Process (RPEA) of the Environmental Quality Board (EQB), Number 8858, effective on November 23, 2016. After analyzing the project, it is concluded that the action proposed by AES-PR will not result in a significant environmental impact. On the contrary, the proposed project is a corrective measure required by the CCR that seeks to eliminate impacts to groundwater that can lead to the percolation of rainwater or water used to spray the AGREMAX™ inventory in order to avoid fugitive dust, as required by the AES-PR Fugitive Dust Control Plan. In short, the purpose of the project is to improve the temporary storage area of AGREMAX™ in order to minimize or prevent any damage to the environment.

H. Proposed Location with its Physical and Biotic Components

1. Project Location on Topographic Map (quadrangle) on a Scale 1: 20,000.

The proposed project will realized within the existing AES-PR facilities, located on Carretera Número 3, Km. 142 in the Puente Jobos neighborhood of the Municipality of Guayama. The location of the area where the proposed project will be carried out is shown in the Topographic Quadrangle of Central Aguirre, photo revised in 2018, from the United States Department of Interior and United States Geological Survey (**Figure 2**).

2. Schematic Diagram of the Project on a Convenient Scale

A copy of the Schematic Diagram of the Proposed Project is found in **Appendix 3**.

3. **Area Occupied by the Project**

   The area occupied by the AGREMAX™ Staging Area Liner project will be approximately seven (7) acres (28,327 square meters).

4. **List of Existing Flora and Fauna**

   The proposed project will be carried out in operational areas already affected, where there is no vegetation and where AGREMAX™ is currently temporarily stored; the remnant in the area where pipes will be installed to the Coal Pile Runoff Retention Pond, adjacent to the coal pile.

5. **Soil Types and Characteristics in the Area where the Project will be Located.**

   In order to obtain soil characteristics in the area, information provided by the Web Soil Service System on the NRCS website was used. As can be seen in the Soil Map, **Figure 5**, according to the Soil Inventory for the Humacao Area (Puerto Rico Eastern Part), where the proposed project will be carried out, there are two (2) types of soil, identified as Poncena clay (Po) and Vayas silty clar, frequently flooded (Vc).

   Poncena clay (Po) - These types of soils, with almost leveled slopes, are deep, moderately well drained, calcareous and low permeability. This type of soil has a very high water capacity, high capacity to shrink and to expand, and moderate natural fertility. The physical properties of the soil combined with the small precipitation rates in the area severely limit its use in agriculture.

   Vayas silty clar, frequently flooded (Vc) - These level soils are found in the rising planes of rivers and are frequently flooded. They are deep, poorly drained soils, with low permeability and a high capacity of available water. The risks of flooding, poor drainage, low permeability, and poor viability are moderate constraints for agriculture.

   The project will be located in the area where the material from AGREMAX™ is currently being accumulated, making any soil characterization and geotechnical study in order to evaluate the existing subsoil conditions in the area will not be necessary.

6. **Existing Geological Formations in the Project Area and Adjacent Areas**

The AES-PR facilities are located in one of the coastal alluvial plains in the southern part of the island. The plain runs parallel to the south of the hills, which mark the end from the mountainous region of the Central Mountainrange of Puerto Rico. The coastal plains are composed of alluvial deposits, swamps, lagoons, and beaches. These deposits are from the Quaternary Age and screen rocks from the Cretaceous period. According to the Geological Map of Central Aguirre's Quadrangle, Puerto Rico (**Figure 6**) of the Maps of the United States Geological Inventory (USGS), Miscellaneous Map I-318 of 1960, prepared by Henry L. Berryhill Jr., in the area where the project is located there is a type of geological formation called Alluvial Fan (Qf). The following is the definition of this type of geological formation.

Alluvial Fan (Qf) - Consists of unconsolidated surface deposits of stratified clay, silt, sand, gravel, boulders, and unconsolidated rocks. It is generally found in the northern part of alluvial fans. Clay, silt, and sand are the predominant components of the southern half (or one third) of the fan.

Based on the geology and soil type in the project area, no limitation caused by rocks or soils in the project area. In addition, these areas were already impacted during the construction and operation of the plant.

7. **Existing Natural and Artificial Systems in the Project Area and Areas**

There are wetland systems to the south and west of the project area. According to the United States Fish and Wildlife Service (USFWS) Wetland Inventory, these are referred to as E2FO3P, E2EM1P, E2EM1N, E2US2EP / 3P, and PEM1C. **Figure 7** shows the area map generated by the USFWS website. The definition of these systems is as follows;

E2FO3P -

(E) Estuary System; habitats made up of deep-sea tidal and adjacent tidal wetlands that are usually semi-enclosed by land but have access to the sea, either open, partially obstructed, or sporadic. Sea water is at least partially diluted with fresh water escaping from the land. Its salinity can increase above the salinity of the sea by evaporation. Along low-energy coasts, there is a sizable dilution of seawater.

(2) Intertidal Subsystem; the substrate in these habitats is flooded and exposed to the tides. Includes the associated splash zone.

(FO) Forest Class; it is characterized by woody vegetation six meters or higher.

(3) Subclass of Evergreen Broad Leaves; woody angiosperms (trees or shrubs) with relatively broad leaves, which generally remain green and are usually persistent for periods of a year or more.

(P) Irregularly Flooded Water Regime; The tide floods the substrate less than once a day.

E2EM1P -

(E) Estuary System; made up of deep-sea tidal habitats and adjacent tidal wetlands usually semi-enclosed by land but with access to the sea; either open, partially obstructed, or sporadic. Sea water is, at least, partially diluted with fresh water that flows from the land. Its salinity can temporarily increase above the salinity of the sea due to evaporation. Along low-energy coasts, there is a sizable dilution of seawater.

(2) Intertidal Subsystem; the substrate in these habitats is flooded and exposed to the tides. Includes the associated splash zone.

(EM) Emergent Class; characterized by erect and rooted herbaceous hydrophytes, excluding mosses and lichens. This vegetation is present for most of the growing season, most of the years. These wetlands are usually dominated by perennials.

(1) Persistent subclass; dominated by species that normally remain stationary, at least until the beginning of next growing season. This subclass is only found in estuarine and palustrine systems.

(P) Irregularly Flooded Water Regime; The tide floods the substrate less than once a day.

E2EM1N -

(E) Estuary System; made up of deep-sea tidal habitats and adjacent tidal wetlands usually semi-enclosed by land but with access to the sea; either open, partially obstructed, or sporadic. Sea water is, at least, partially diluted with fresh water that flows from the land. Its salinity can temporarily increase above the salinity of the sea due to evaporation. Along low-energy coasts, there is a sizable dilution of seawater.

(2) Intertidal Subsystem; the substrate in these habitats is flooded and exposed to the tides. Includes the associated splash zone.

(EM) Emergent Class; characterized by erect and rooted herbaceous hydrophytes, excluding mosses and lichens. This vegetation is present for most of the growing season, most of the years. These wetlands are usually dominated by perennials.

(1) Persistent subclass; dominated by species that normally remain stationary, at least until the beginning of next growing season. This subclass is only found in estuarine and palustrine systems.

(N) Regularly Flooded Water Regime; The tides flood the substrate daily.

E2US2EP / 3P -

(E) Estuary System; made up of deep-sea tidal habitats and adjacent tidal wetlands usually semi-enclosed by land but with access to the sea; either open, partially obstructed, or sporadic. Sea water is, at least, partially diluted with fresh water that flows from the land. Its salinity can temporarily increase above the salinity of the sea due to evaporation. Along low-energy coasts, there is a sizable dilution of seawater.

(2) Intertidal Subsystem; the substrate in these habitats is flooded and exposed to the tides. Includes the associated splash zone.

(US) Unconsolidated Coast Class; includes all wetland habitats with these two characteristics; 1) unconsolidated substrates of stones and rocks in less than 75% of its area covered ; 2) less than 30% of its area covered by vegetation.

(2) Area subclass; unconsolidated particles smaller than rock are predominantly sand, although it may be mixed with finer or coarser sediments.

(3) Subclass of clay; unconsolidated particles smaller than rock are predominantly silt and clay, although they may be mixed with sediment or thicker organic material.

(P) Irregularly Flooded Water Regime; The tide floods the substrate less than once a day.

PEM1C -

(P) Palustrino System; The Palustrino System includes all non-tidal wetlands dominated by trees, shrubs, emergent persistent, mosses or emergent lichens, and all wetlands that occur in tidal areas where salinity due to salts derived from the ocean is below 0.5 ppt. It also includes wetlands that lack such vegetation, but with the following four characteristics: (1) less than 8 ha (20 acres) of area; (2) active features of the shoreline formed by waves or bedrock are missing; (3) water depth in the deepest part of the

basin less than 2.5 m (8.2 ft) in shallow water; and (4) salinity due to ocean-derived salts of less than 0.5 ppt.

(EM) Emergent Class; characterized by erect and rooted herbaceous hydrophytes, excluding mosses and lichens. This vegetation is present for most of the growing season, most of the years. These wetlands are usually dominated by perennials.

(1) Persistent subclass; dominated by species that normally remain stationary, at least until the beginning of next growing season. This subclass is only found in estuarine and palustrine systems.

(C) Seasonally flooded water regime; surface water is present for long periods, especially at the beginning of the growing season, but is absent at the end of the growing season in most years. Water table after flooding stops is variable, ranging from saturated at the surface to a water table well below the ground surface.

The wetland area to the south is outside the proposed project boundaries. Neither the construction nor the operation of the proposed project will impact the natural systems herementioned. The closest wetland area to the proposed project is approximately 60 meters away.

There are wetlands within the boundaries of the AES property. This area is fenced, and trucks will not pass through this area. The route of the trucks will be delimited so that they do not impact the wetlands area.

8. Proposed Zoning and Land Use for the Project

The area where the proposed project is contemplated is within the scope of the Land Qualification Maps of the Municipality of Guayama, Sheet Number 441-018 and 441-019, both effective March 19, 2008. Sheets Number 441-018 and 441-019 in **Figure 8** have been integrated into a single one in order to identify the qualification of the project area. According to the information obtained from these sheets, the project area is within the **IL-2 District**, which is defined as Heavy Industrial district. In Table 6.1, Qualification Districts Equivalences, of Section 6.1.1.3 (Transition and Equivalence Clause) of the Permit Management Office of the Department of Economic Development and Commerce (DEDC) (Permit Regulation) in force June 7, 2019, District IL-2 is now an **Industrial District (I)**.

Below, the definition of this district according to the Joint Regulation in force June 7, 2019:

Industrial District (I) - the Joint Regulation defines it as Industrial, I. In Rule 6.1.11, District I, Industrial, in Section 6.1.11.1 establishes the purpose associated with this district and is as follows:

a) This district is established to identify industries or industrial areas both light and heavy, developed or likely to develop.

b) The extension of land for these industries will be based on the area's potential, the infrastructure capacity, the direction of the winds, effects on the quality of air, water and land, as well as the potential of the activity of produce odors, noises, emanations, vibrations, reflections of lights of the implications of the traffic generated in the transportation system and of the better organization of the use of the land.

c) The objective is that the land is dedicated to such purposes, excluding residential use.

d) The district allows the establishment of certain commercial uses to meet the needs of the area.

The proposed project is consistent with the site's rating.

9. Water Bodies that will be Impacted by the Proposed Action

In adjacent areas, within a 400-meter distance, measured from the perimeter of the proposed project, are the wetland zones to the south and west of the project. However, this body of water will not be affected by the proposed project.

During the project's liner installation and operation, pollutants will not be discharged into bodies of water since all the runoff of rainwater or resulting from spraying, which is used to prevent and control fugitive dust, is directed into internal channels and then to a lagoon known as the Coal Pile Runoff Pond. The waters collected here are recycled within the electricity generation process. In addition, no hazardous waste is to be generated during liner installation or operation - as all materials to be used are not listed and do not possess characteristics of hazardous materials.

Las Mareas lagoon is located to the southwest of the proposed project, at a distance greater than 400 meters (approximately 750 meters).

10. Drinking Water Wells within a Radius of 400 meters from the Project Perimeter

To identify the drinking water wells within a 400-meter radius from the perimeter of the project, the (DNER) was asked to list the existing wells in the Municipality of Guayama. This information has not been received, due to the COVID-19 pandemic. For this reason, the inventory of Water Resources for Puerto Rico from the United States Geological Survey (USGS) was consulted. The map of wells in the area near the project is shown in **Figure 9**. This map shows seven (7) wells located less than 460 meters from the project's perimeter. However, none of these wells were used as a drinking water supply. Besides being inactive, they are shown to belong to TAPI and Chevron Phillips.

AES-PR has seven (7) water wells on its property. These wells are included in the franchise number R-FA-FAID6-SJ-00073-25062008 of the DNER. These wells are not located in the project area.

11. Indicate whether or not the Project or any Component of it will be Located in a Flood Level Zone

The area where the proposed project is planned to be built is located on Map Number 72000C2110J from the FEMA Recommended Base Flood Level Maps. This map has an effective date of April 13, 2018. A copy of the map is found in **Figure 4**. According to this map, a part of the area where the project will take place is located in the AE Zone, with flood levels being 3.4 and 3 meters above Mean Sea Level. Next, the definition of the zone of the area for the proposed project according to the Regulation on Special Flood Hazard Areas (Planning Regulation No. 13), seventh revision in force January 7, 2010.

Zone AE: Special flood risk area with 100-year recurrence period, determined by specific methods and for which the elevations of the base flood are indicated. Depending on the scope of the study, it may include the determination of the Main Riverbed.

As part of the project, the existing Storage Area within the floodplain will not be increased in size.

12. Available Infrastructure

a) Drinking Water Lines

The drinking water system used by AES-PR is for the consumption and use of its employees. It is supplied by the Filtration Plant of the Aqueduct and Sewer Authority (AAA) of Guayama and is completely separate from the industrial or processed water management system. Drinking water is supplied to the plant through connection with the existing AAA main distribution line on the PR-3 highway. The Guayama Filtration plant has a capacity of 3,000,000 gallons per day.

On the other hand, the water used by AES-PR for its industrial process comes from the following supply sources:

- Wastewater from the AAA Regional Treatment Plant in Guayama (Water Claim)
- Water of the Patillas Channel
- Water from Wells
- Stormwater Runoff

These waters are stored in a water supply storage with a capacity of 2,000,000 gallons. They are then used by the plant, which operates with a zero discharge system. Stormwater runoff is collected in two (2) lagoons of 15 and 2 million gallons, respectively.

b) Sanitary Sewer Lines

The sanitary wastewater generated at the AES-PR plant is currently connected to the Guayama Regional Wastewater Treatment Plant. Process waters are treated in a treatment plant without discharge, as required by the EQB. This treatment system is authorized by the EQB under permit C-AG-01-30-006.

c) Electric Power Line

The plant produces and supplies its own electricity.

d) Access Routes

The main access road to the AES-PR plant is through the Carretera Estatal PR-3, Km. 142.0, in the Puente Jobos neighborhood of the Municipality of Guayama. This road links with PR-7707 and with PR-53.

13. Access Routes to the Proposed Project

During the project's construction activities the main access route to the plant, as described above, will be used.

14. Distance from the Project to the Nearest Residence and Quiet Zone

The EQB Noise Pollution Control Regulation defines Zone IV (*Quietness)* as a previously designated area with a need for exceptional quietness, where sound levels during ten percent (10%) of the measured period does not exceed the limits established in Article IV of such regulation. This definition includes, but is not limited to, areas such as the following: Hospitals, Clinics, Mental Health Hospitals, and Justice Courts.

The quietness area closest to the proposed project is where the Guayama Judicial Center and the Guayama Mennonite Medical Center are located. These are located approximately 4,700 meters to the northeast. The closest residence to the project area is located in the Community of Las Mareas, Carretera PR-710, south-east of the facility. It is approximately 715 meters away.

15. Public or Private Drinking Water Outlets

The closest public drinking water intake to the proposed project area is that of AES-PR with the AAA.

16. Identification or Location of Ecologically Sensitive Areas Close to the Project Area and Distance at which they are Found

There are wetland systems approximately 60 meters away from the project area to the south, as well as 280 meters to the west. The wetland area to the south is outside AES-PR property and the boundaries of the proposed project. Part of the wetland to the west is inside of AES-PR property, but outside the limits of the area where the project will be developed. These wetland zones will not be affected by the construction of the project.

IV. Description of the Proposed Action

1. Project Needs

As mentioned above, the EPA adopted the CCR Rule titled Hazardous and Solid Waste Management System; Disposal of Coal Combustion Residuals from Electric Utilities, Volume 80 Federal Register, 21302 (April 17, 2015) (published in Title 40, Section 257.61 of the Code of Federal Regulations [CFR]; Volume 83. Federal Register 36435 (7/30/2018) (amending 40 CFR Section 257.61) This rule established national regulations to provide a complete set of requirements for the safe disposal and management of coal combustion residues from coal-fired power plants.

The purpose of this project is to implement requirements established in this EPA rule.

2. Estimated Total Cost of the Project

The estimated cost of the AGREMAX™ *Staging Area Liner* project is approximately $ 6,784,241.00. The funds for the project will be private.

3. Earthworks

AES-PR intends to remove temporarily stored AGREMAX™ in the project area and into the approximate bottom layer (i.e., natural level) below the preparation area that existed prior to the start of each work phase. It is estimated that approximately 58,000 cubic yards of AGREMAX™ will be removed. This removal is expected to reach an average depth of about four (4) to six (6) feet deep. The AGREMAX™ material removed will be disposed of outside of Puerto Rico, being transported by barge in the same way that it is currently disposed of in normal operations.

As part of the project, an earth excavation activity will be required related to the installation of underground pipes from the AGREMAX™ Storage Area to the Runoff Retention Pond of the existing coal pile area. The amount of material extracted from the earth's crust will be approximately 700 cubic yards.

Also, approximately 173,600 cubic yards (132,726 cubic meters) of fill material will also be deposited in the project area, which will be acquired from a private quarry with all its permits approved. If necessary, an area to store the fill material to be purchased from

such quarry will be designated . This area would be protected to control erosion, sedimentation, and fugitive dust.

4. Indicate the Measures to be Used to Minimize Damage Caused by Erosion, Sedimentation and Deforestation during Construction and Operation

a) Erosion and Sedimentation

During the construction phase of the proposed project, earthworks will take place. For such reason, measures will be established to control erosion and sedimentation in the project area. Operation of the proposed project does not contemplate activities that result in erosion or sedimentation. Some measures they plan to put in place during construction are the following:

- The precise area of the project will be delimited to reduce possible impacts to lands outside of it; the traffic routes to be used will be labeled.
- In areas where the earthworks will happen, the control measures established in the CES Plan plans will be installed.
- The Project is divided into in construction phases in order to minimize the area of land that will be impacted at any given time.
- Construction of an area dedicated to washing truck tires.

b) Deforestation

The construction of the proposed project does not involve deforestation activities. There are no trees in the area where excavations will take place. During the operation of the project no reforestation activities will be carried out.

5. Fugitive Dust

During the construction activities of the proposed project, fugitive dust emissions will be generated due to the movement of the AGREMAX™, the excavations for the installation of the pipeline, and the filling activity mentioned in this document. However, the construction phase of the proposed project is not expected to have a significant impact on air quality in the area. During the construction of the project, the AES-PR Standardized Operating Procedures (SOP) will be implemented for the management of fugitive dusts from waste materials charcoal and AGREMAX™. A copy of these procedures (SOP-CCP-004) can be found on the AES-PR website, and is included in

Appendix 5. The document details the control measures that are carried out in the AGREMAX™ stack and in operations related to their handling and transportation, using loading trucks and transfers by conveyor until unloading in ships.

It is contemplated to use 3,000-gallon water-tanks to control fugitive emissions during construction. Ten trips per day are estimated for this operation. Water will be obtained from the Canal de Patillas. In addition, the trucks that will transport the filling material will be covered by tarpaulins.

During the operation of the proposed project, no additional generation of fugitive dusts is expected to those currently generated in the AGREMAX™ management activity. The measures for the control of fugitive dust in the AGREMAX™ management activities are contemplated within the Dust Control Plan of AES-PR, **Appendix 5**.

6. Noise Levels During Construction and Operation Stages, Including Hours

The movement of trucks to haul AGREMAX™ and construction materials will be the main source of noise during the construction phase of the proposed project. Routes for trucks and other construction equipment will be predetermined to minimize the impact of noise on sensitive receptors. All heavy machinery to be used will be kept in optimal operating conditions to control noise levels. In addition, it is important to note that construction of this project is temporary. **Table 1** of this document presents typical values of noise levels caused by different construction equipment, measured at a distance of 15 meters. No significant adverse impacts are expected on noise levels in the area as a result of the construction of the proposed works.

Table 1 - Noise Levels for Construction Equipment

(Measured 15 Meters from the Source)

Equipment Types	Typical Noise Levels (dBA)
Truck (to load concrete)	71-82
Truck (to load cement)	91
Compressor	71-87
Drilling machine (manual, pneumatic)	88
Concrete saw	87
Water Pump	79
Concrete pump	76
Generator	69-75

The existing AES-PR facilities are located in an area classified as Zone III (industrial), Source of Industrial Emission, as defined by the EQB. The contiguous areas are also classified as an industrial zone.

The operation of the project will not increase noise levels currently generated in the AGREMAX™ management activity.

7. Control Measures to be Used to Minimize the Noise to be Emitted and Received during Construction and Operation

During construction activities, noise levels in excess of applicable standards could be generated. However, this effect will only be temporary. To attenuate this noise, the contractor will be required to use construction equipment with silencers or other sound attenuators in good operating condition.

8. Light pollution

The project does not include installation of luminaires. Therefore, it will not cause any light pollution during its construction and operation.

9. Protection Measures for Existing Natural Systems

As previously discussed, to the south of the property where the proposed project is to be built there are wetlands. However, this area will not be affected by the project. AES-PR, in its commitment to protecting the environment is determined to establish

available practices to ensure that the construction and operation of the proposed project does not affect the existing ecosystems in the area.

10. Estimated Consumption and Water Supply, in the different Stages of the Project

The construction activities of the proposed project will have a potable water demand of 300 GPD, approximately, which will require the potable water service on a temporary basis. It is proposed that this demand for drinkable water be obtained through a temporary connection to the existing plumbing system at the AES-PR facilities. Drinking water consumption during construction activities was calculated considering the use of 10 gallons of water per day per employee, including cleaning tasks, and a 30-people maximum number of employees. In addition, an industrial water use of 30,000 GPD is estimated to control fugitive dust during construction. Tank trucks will be used, and the water will be obtained from the Patillas Canal.

The operation of the proposed project will not require additional drinkable water resources.

Due to the nature of the proposed action and the measures mentioned above, the construction and operation of the proposed project is not expected to have a significant impact on the potable water facilities or services in the area.

11. Estimated Volume of Used Water to be Generated during the Construction and Operation Stages

Wastewater generated during construction period will be mostly sanitary. Portable toilet units will be provided construction employees' use. Management and disposal of wastewater by portable means will be in charge of a private company that specializes in this type of service and that is duly authorized to do so. These wasrewaters will be collected at least one (1) time per week during the construction period.

Operation of the proposed project will not generate additional wastewater.

12. Place of Final Disposal of Waters Used during the Construction and Operation Stages

As mentioned above, during construction activities, an authorized firm will be hired to collect wastewater generated in the portable toilets used by construction employees.

Operation of the proposed project will not generate additional wastewater.

13. Storage Tanks

No new storage tanks will be installed as part of the proposed project.

14. Place of Final Disposal of Runoff Waters

a) During Construction

The proposed construction involves earthworks. Prior to them, the existing runoff water system of the AES-PR facilities, which may be affected by the project, will be protected. No significant adverse impact on stormwater runoff is expected. However, the actions proposed in the project will be completed through a construction plan and itinerary that will incorporate appropriate models to prevent contamination to bodies of water during construction.

b) During the Operation

To manage rainwater infiltration and avoid/minimize rainwater percolation reaching groundwaters, pipes will be installed in the Storage Area using pumps to discharge their content into the Coal Pile Runoff Pond in AES-PR. This work will be part of the proposed project. Otherwise, the project will not alter the existing storm sewer system at the AES-PR facilities.

15. Dredged

No dredging will be carried out as part of the proposed project.

16. Solid Waste

The proposed project will involve construction activities during which non-hazardous solid waste will be generated. The waste that will be generated will be typical from construction activities, such as pieces of wood, pieces of metal, paper and plastic. Construction of the proposed project will last approximately six (6) months. Although it is not possible to determine the exact amount of non-hazardous solid waste to be generated, according to the extension and duration of the project, it is estimated that

approximately 20 cubic yards per week will be generated. At the end of construction, approximately 520 cubic yards of non-hazardous solid waste will be generated. Prior to starting the construction of the proposed project and if necessary, the OGPe will be asked for a Solo Incidental Operational Permit for the activity.

Non-hazardous solid waste will be collected and stored daily in covered containers, duly authorized for this use. These containers will be located within the project site where they do not interfere with development. Every week, or when necessary, companies authorized in the Operation Plan to prepare handling this kind of waite, will collect this waste to transport it and dispose of it as applicable. Construction employees will be designated and trained to handle non-hazardous solid waste. Designated employees will transfer waste to said containers periodically. The necessary safety equipment will be used according to the type of non-hazardous solid waste that is handled. For the disposal of this waste, companies that have Permits to Operate a Collection or Transportation Service of Non-Hazardous Waste (DS-1) in force, will be used. These companies will deposit the waste in places authorized by their DS-1 Permit.

In the construction of the project, it is expected that there will be more than ten (10) employees, therefore, it will be necessary to present to the Department of Natural and Environmental Resources (DNER) a Recycling Plan for non-hazardous solid waste management associated with construction works.

Operation of the proposed project will not generate additional non-hazardous solid waste.

a) Special and Hazardous Waste

No special or hazardous waste will be generated during the construction and operation of the project.

17. Sources of Atmospheric Emission

a) During Construction

During the construction phase of the proposed project, different combustion equipment will be used, such as heavy transport and construction vehicles (loader, bulldozer and

excavators, for example), portable electric generators, portable water pumps and light towers.

During construction activities, fugitive dust is also expected to be generated due to the movement of AGREMAX™ and due to excavations for the installation of pipes (mentioned in this document), which are not expected to be significant. AES-PR has a Standard Operating Procedures (SOP) for handling fugitive dusts from coal waste and AGREMAX™. A copy of these procedures (SOP-CCP-004) can be found on the AES-PR website and they are included in **Appendix 5**. The document details the control measures carried out in the AGREMAX™ stack and in operations related to its handling and transport; from using loading truck and stransfers by conveyor to unloading in ships. Therefore, the construction phase of the proposed project is not expected to have a significant impact on air quality in the area.

b) During the Operation

AES-PR facilities operate as a major source under a Title V Operating Permit, number PFE-TV-4911-30-0703-1130, see **Appendix 6**. Currently, the plant operates under the Protective Cover of the Application. Title V Permit Renewal for its operation, see **Appendix 7**.

In Operation Permit Title V, the Emission Unit EU-20A / EF-20B, EF-20C, EF-20D is identified as Ash Transportation by Trucks to the Aggregate Production Area (AOS-3). It is important to mention that this Emissions Unit will not be affected as a result of the operation of the proposed project.

18. Electric Power Demand in the Different Stages of the Project

Electricity demand during construction is estimated to be approximately 12 kW. This will be mainly due to temporary facilities for construction offices. The AES-PR plant produces and supplies its own electricity.

Operation of the proposed project will not generate additional demand for electricity.

19. Installation of Emergency Electricity Generators

Construction of the proposed project will be carried out within existing facilities with an electrical distribution capable of meeting any energy requirement during construction. If it is not possible to use existing electricity facilities, portable electricity generators would be used for construction activities.

20. Increase Vehicle Traffic to be Generated in the Construction and Operation Stages

Thirty people will be employed to work on the construction process. Increase om traffic during construction is not significant in terms of vehicles. However, there will be an increase in truck traffic when the fill-moving actions of the project is taking place. Traffic control measures will be taken when this activity is occurring. Prior to the start of construction, truck routes for the delivery of material will be determined. If it is necessary, a parking area for trucks delivering the material will be identified. Schedules for delivery of the material will be established. Routes will be labeled to direct traffic.

Operation of the proposed project will not increase vehicle traffic in the area because the operations of the plant will be the same as before the project.

21. Environmental Impact Assessment and Mitigation Measures

Summarized below are the foreseeable environmental impacts due to the construction and operation of the proposed action.

- Electricity demand - approximately 12 kW during construction, expected to be obtained from electricity generators. There will be no increase demand in electricity during operations. The facility produces and supplies its own electricity.
- Drinking water consumption - approximately 30,300 GPD during construction. Approximately 30,000 GPD for construction works and an estimated 30,000 GPD of industrial water used to control fugitive dust during construction. Water will be obtained from the Patillas Canal and tank-trucks will be used. There will be no increase in drinkable water consumption during the operation of the proposed project.
- Wastewater discharge - there will be no increase in wastewater discharge during operation. The project will not create new jobs, and the plant is classified as a zero process water discharge plant.

- Earthworks - as part of the proposed project, approximately 173,600 cubic yards (132,726 cubic meters) of fill and approximately 700 cubic yards (535.19 cubic meters) of cut will be carried out as earthwork.
- Non-hazardous solid waste - approximately 520 cubic yards are estimated to be generated during construction, and no generation of non-hazardous solid waste is anticipated during operation.
- Increase in vehicular flow from the movement of fill material trucks is expected during construction. No increase in traffic is expected during project operation.
- Fugitive dust - fugitive dust emissions will be generated during construction activities of the proposed project, this due to the movement of the AGREMAX™, excavations for the pipeline installation and the filling activity. However, it is not expected that the construction phase of the proposed project will have a significant impact on air quality in the area.

These impacts will not be significant because, in compliance with permit conditions, including current permits and development plans for its operation, AES-PR will take the corresponding measures to minimize and prevent any significant adverse impact during the construction phase of the project. AES-PR is committed with environmental protection. Therefore, the design of this project contemplates minimizing or preventing environmental impacts in its construction and operation phases.

22. Justification for the Determination of No Significant Impact (FONSI)

In light of the above analysis, it is concluded that the action proposed by AES-PR will not entail a significant environmental impact. On the contrary, the proposed project is a corrective and remedial action required by the CCR Rule. This action seeks to eliminate impacts to groundwater that may be caused by percolation of water from rain or by the water used to spray the AGREMAX™ inventory to avoid fugitive dust and that is temporarily stored in the facility.

IV. Appendix

Appendix	
_1	Technical Information on AGREMAX™
_2	Location Plan of the Proposed Project
_3	Preliminary Plans of the Proposed Project
_4	Liner Technical Information
_5	*Coal Combustion Residuals and AGREMAX™ Dust Control Plan*
_6	Operation Permit Title V
_7	Protective Cover of the Title V Permit Renewal Application

FIGURES

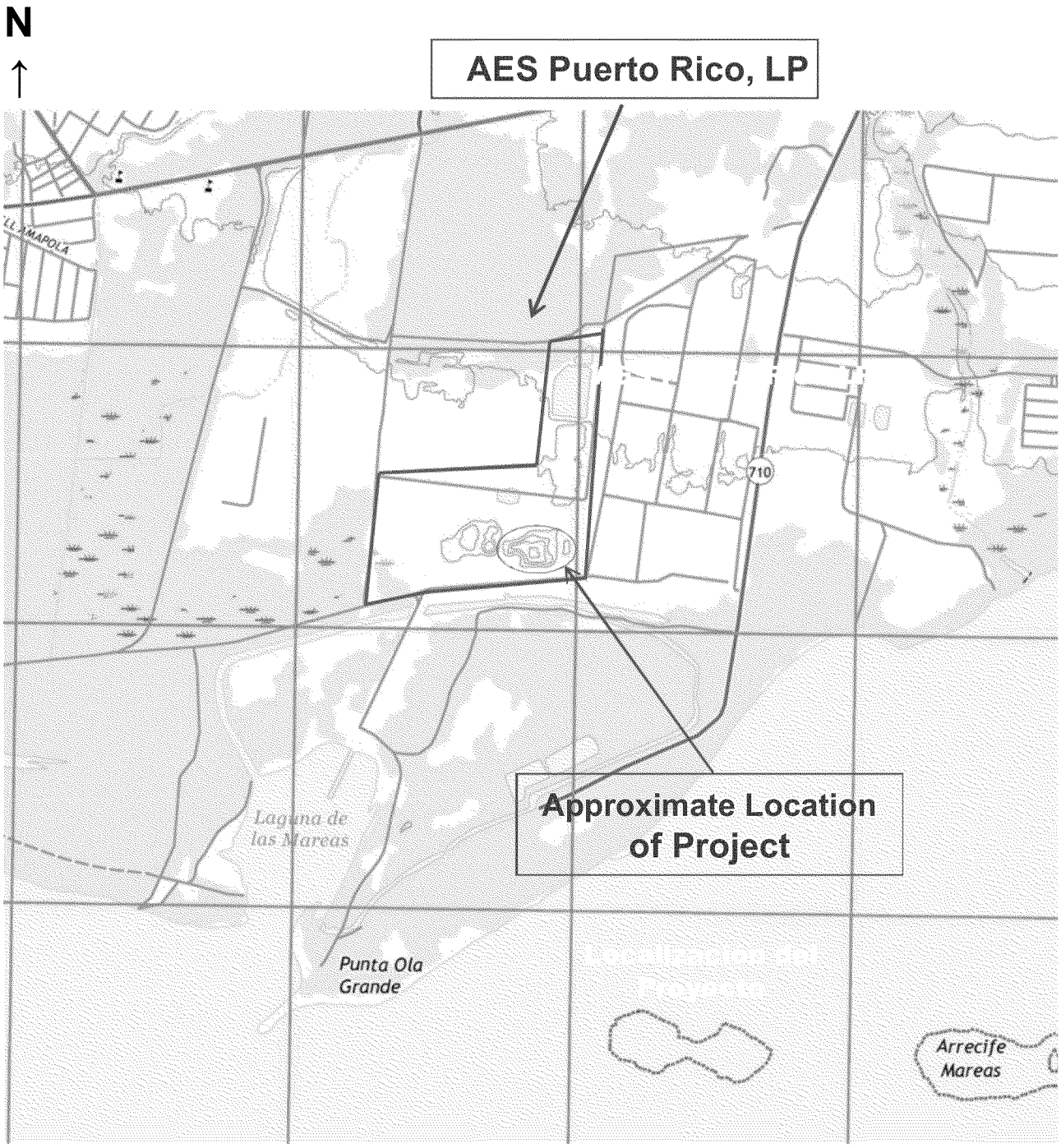

Figure 1

CARIBBEAN ARCHITECTS & ENGINEERS

AES PUERTO RICO, LP
GUAYAMA, PUERTO RICO

LOCATION MAP
Topographic Quadrangle Central Aguirre
United States Department of the Interior
United States Geological Survey
Foto Revisado 2018
Scale 1: 20,000

AES Puerto Rico

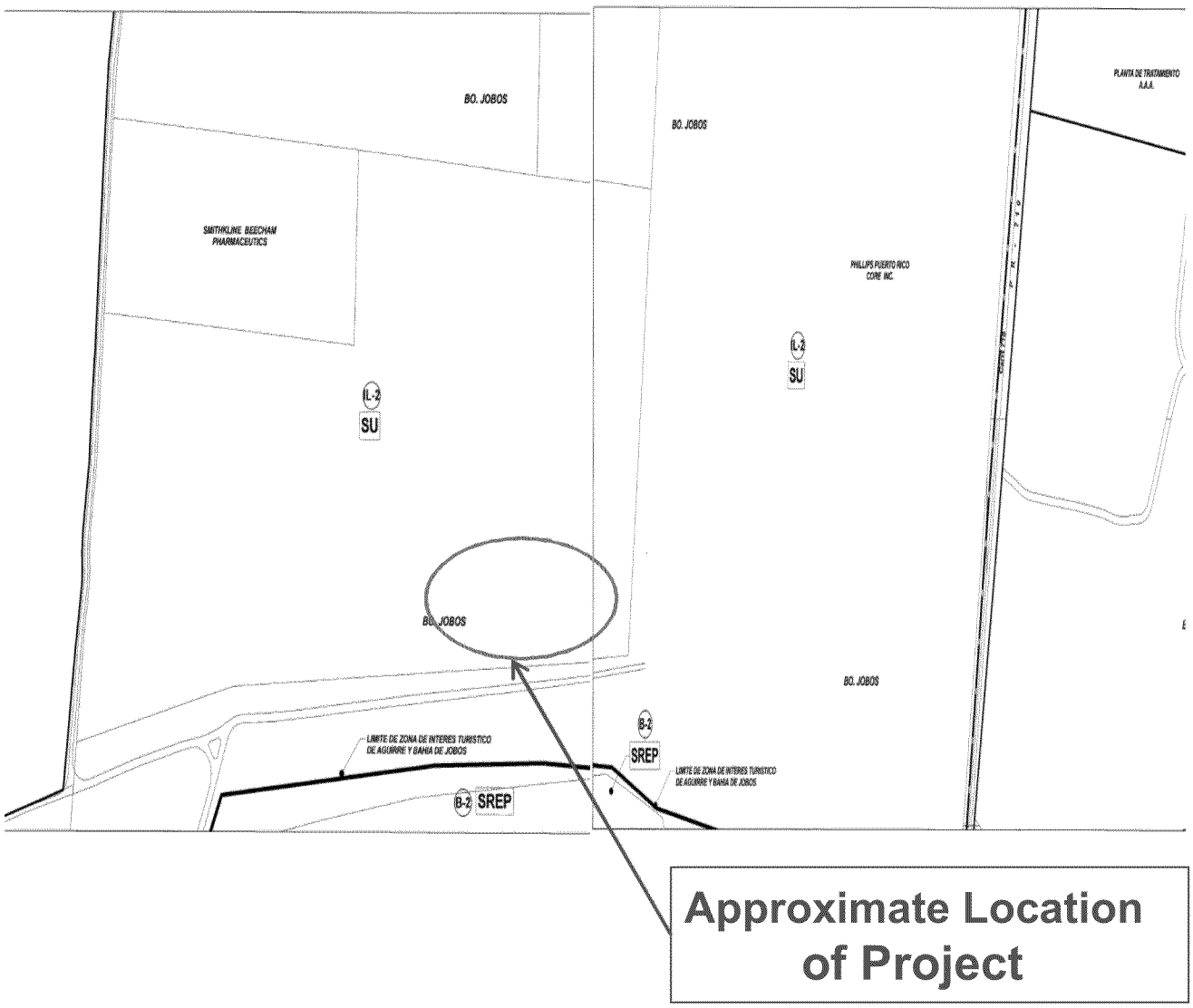

Figure 2

CARIBBEAN ARCHITECTS & ENGINEERS	**AES PUERTO RICO, LP** **GUAYAMA, PUERTO RICO**	AES Puerto Rico
	Land Qualification Map of Guayama Municipality Sheets Number 441-018 y 441-019 In force March 19th, 2008	

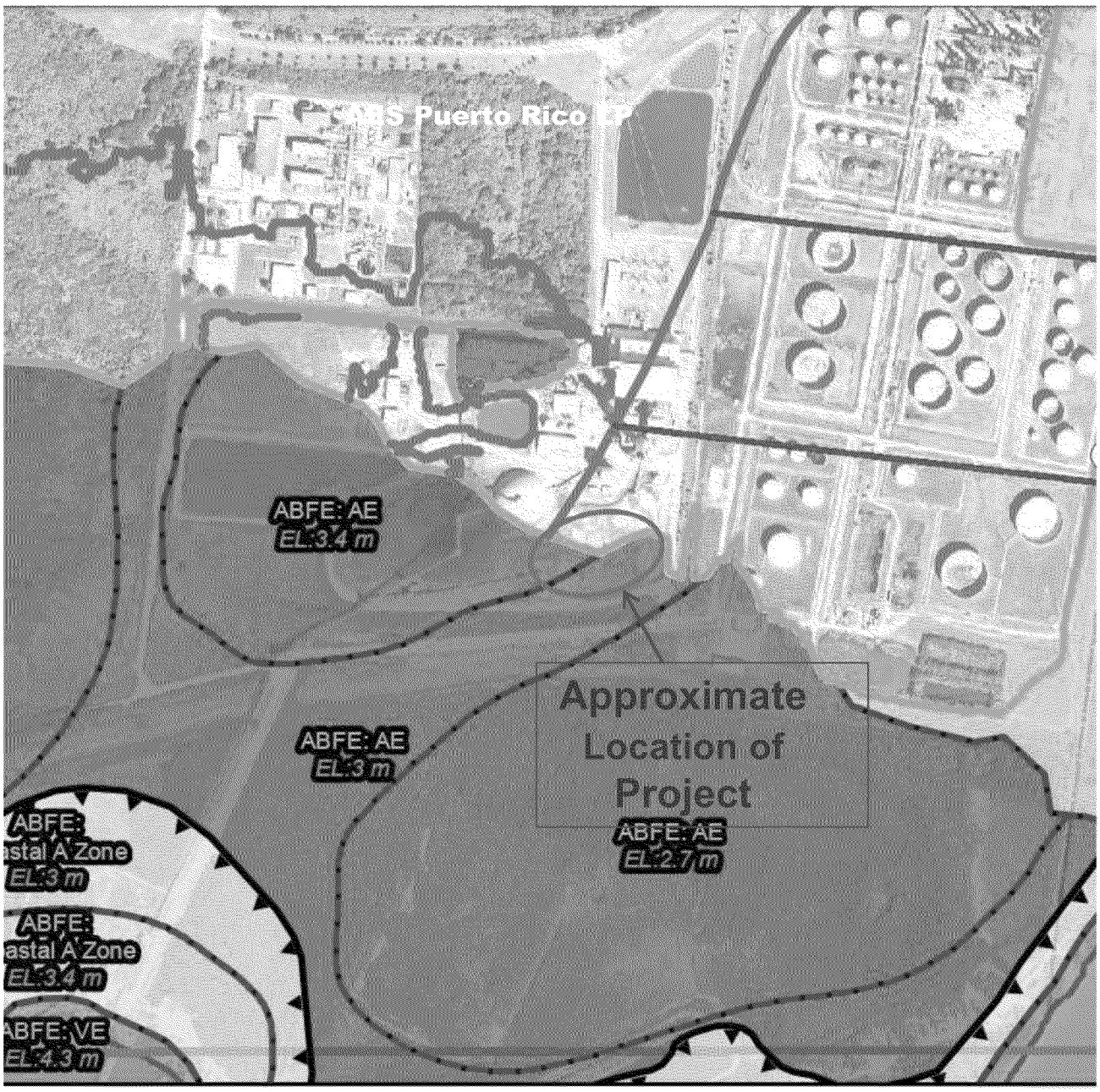

Figure 3

CARIBBEAN ARCHITECTS & ENGINEERS

AES PUERTO RICO, LP
GUAYAMA, PUERTO RICO

Flood Level Base Maps
Map Number 72000C2110J
Effective Date: Abril 13th, 2018
Agencia Federal de Administración de Emergencias (FEMA)

AES Puerto Rico

N
↑

Approximate Location of Project

Figure 4

CARIBBEAN ARCHITECTS & ENGINEERS	AES PUERTO RICO, LP GUAYAMA, PUERTO RICO Aerial View of Project Not in Scale	AES Puerto Rico

APPENDIXES

APPENDIX 1

Proposed Project's Area

APPENDIX 2

AES - PR TOTAL ENERGY PLANT

ASH CELL CONSTRUCTION
GUAYAMA, PUERTO RICO

LOCATION MAP
N. T. S.

DRAWING LIST

1. COVER SHEET
2. EXISTING SITE CONDITIONS
3. GRADING PLAN
4. DETAILS I
5. DETAILS II
6. COMPONENTS QUANTITY

REV.	DATE
0	5/5/2015 4:02 PM

PREPARED BY:

OASIS CONSULTING SERVICES
45 ROSWELL STREET
ROSWELL, GEORGIA 30075
PHONE: (678) 739-2400
FAX: (770) 552-5550

PREPARED FOR:

AES - PR TOTAL ENERGY PLANT
GUAYAMA, PUERTO RICO

SITE:
AES - PR TOTAL ENERGY PLANT
GUAYAMA, PUERTO RICO

PROJECT:
ASH CELL CONSTRUCTION PLAN

TITLE:
COVER

DESIGN BY:	S.SIN	DATE BY:	5/1/15
DRAWN BY:	S.SIN	PROJECT NO.:	XX-XXXX
CHECKED BY:	M.MONTELEONE	FILE:	
REVIEWED BY:	M.MONTELEONE	SHEET NO.:	REV.:
APPROVED BY:	M.MONTELEONE	1 OF 6	0

LEGEND

EXISTING GROUND ELEVATION (METER)

0 25 60 Meters

SCALE IN METER

REV.	DATE
0	5/5/2015 4:02 PM

PREPARED BY:

OASIS CONSULTING SERVICES
45 ROSWELL STREET
ROSWELL, GEORGIA 30075
PHONE: (678) 739-2400
FAX: (770) 552-5550

PREPARED FOR:

AES - PR TOTAL ENERGY PLANT
GUAYAMA, PUERTO RICO

SITE:

AES - PR TOTAL ENERGY PLANT
GUAYAMA, PUERTO RICO

PROJECT:

ASH CELL CONSTRUCTION PLAN

TITLE:

EXISTING SITE CONDITIONS

DESIGN BY:	S.SIN	DATE BY:	5/1/15
DRAWN BY:	S.SIN	PROJECT NO.:	XX-XXXX
CHECKED BY:	M.MONTELEONE	FILE:	
REVIEWED BY:	M.MONTELEONE	SHEET NO.:	REV.:
APPROVED BY:	M.MONTELEONE	2 OF 6	0

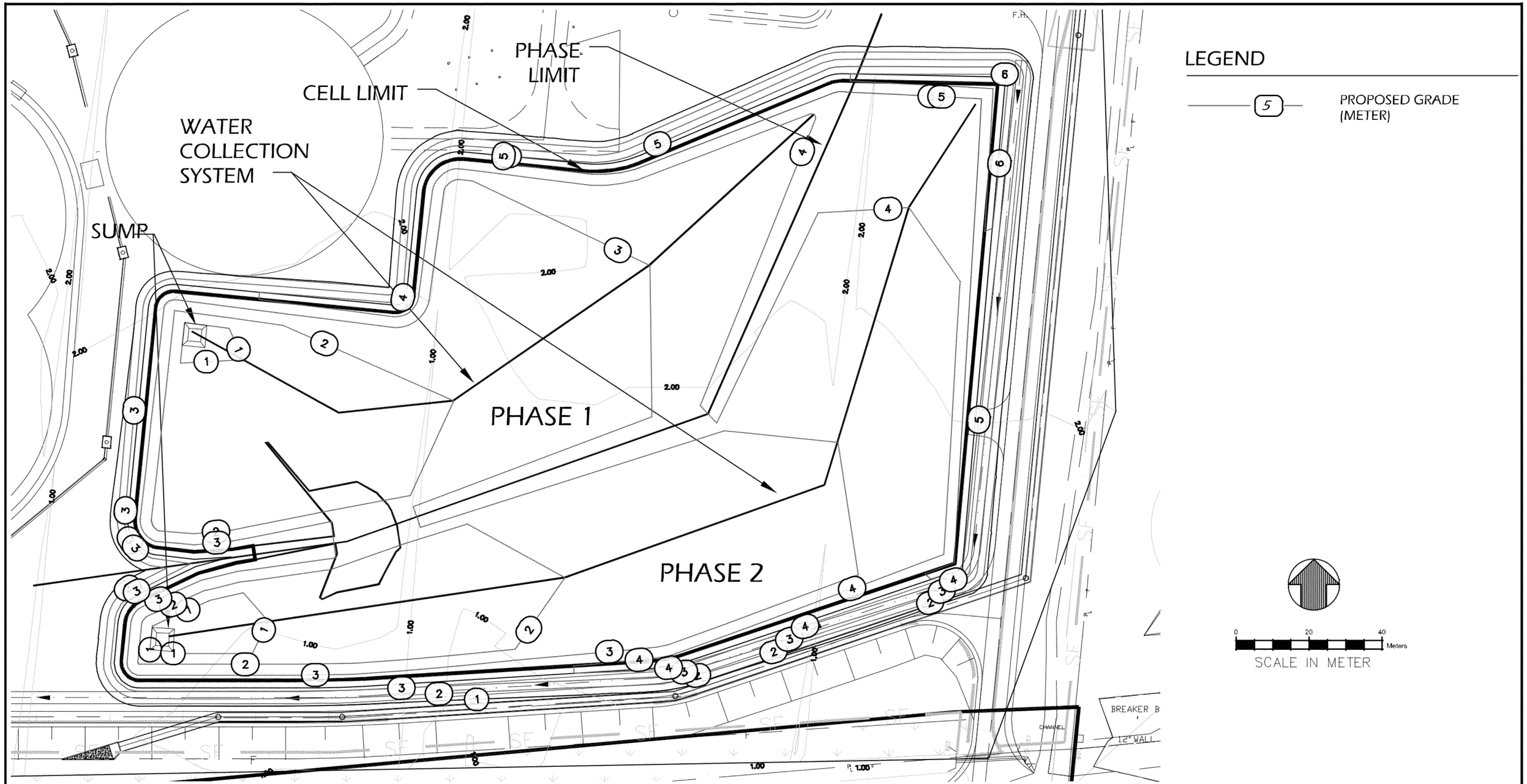

REV.	DATE
0	5/5/2015 4:02 PM

PREPARED BY:

OASIS CONSULTING SERVICES
45 ROSWELL STREET
ROSWELL, GEORGIA 30075
PHONE: (678) 739-2400
FAX: (770) 552-5550

PREPARED FOR:

AES - PR TOTAL ENERGY PLANT
GUAYAMA, PUERTO RICO

SITE:

AES - PR TOTAL ENERGY PLANT
GUAYAMA, PUERTO RICO

PROJECT:

ASH CELL CONSTRUCTION PLAN

TITLE:

PROPOSED GRADING PLAN

DESIGN BY:	S.SIN	DATE BY:	5/1/15
DRAWN BY:	S.SIN	PROJECT NO.:	XX-XXXX
CHECKED BY:	M.MONTELEONE	FILE:	
REVIEWED BY:	M.MONTELEONE	SHEET NO.:	REV.:
APPROVED BY:	M.MONTELEONE	3 OF 6	0

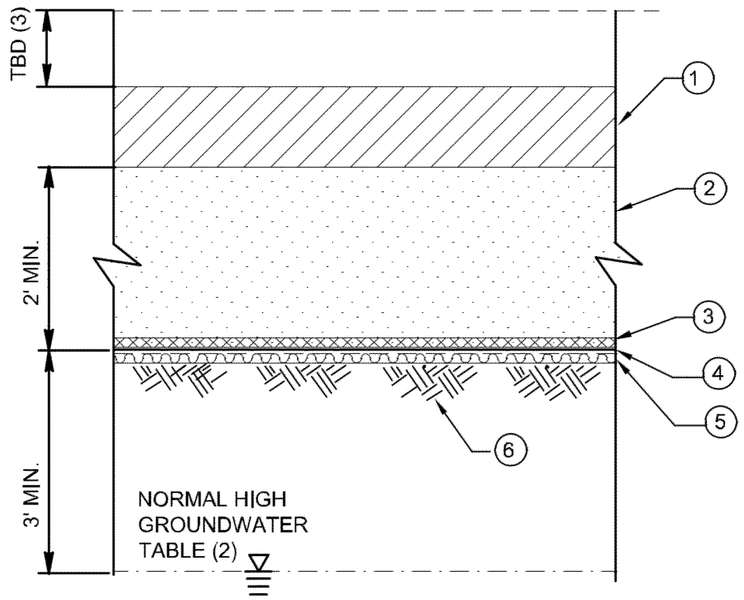

1. DYE LAYER TO 12 INCHES OF AGREMAX (WARNING LAYER)
2. SACRIFICIAL LAYER (RECOMPACTED AGREMAX OR ALTERNATIVE)
3. GEOCOMPOSITE
4. 60 MIL HDPE LINER
5. GCL
6. MIN. 1 FT RECOMPACTED EXISTING SUB-BASE OR IMPORTED MATERIAL SUITABLE TO SUPPORT COMPOSITE LINER (GCL & FML)

1 / – DETAIL (TYP.) COMPOSITE LINER

SCALE: N.T.S.

NOTES:

(1) BOTH GCL & DRAINAGE LAYER TO BE VERIFIED COMPATIBLE WITH AES SUPPLIED LEACHATE AND CHARACTERIZATION DATA FOR AGREMAX.

(2) WATER TABLE ELEVATION TO BE DETERMINED BY AES VIA TEST PIT INVESTIGATIONS WITH RESULTS TO BE PROVIDED AS BID ADDENDUM. REQUIRED 3 FT MIN. VERTICAL SEPARATION BETWEEN INSTALLED ELEVATION OF SEPARATION LAYER (LINER SYSTEM) AND MAX. EXPECTED WATER TABLE.

(3) VARIES BASED ON SEPARATION LAYER INSTALL DEPTH.

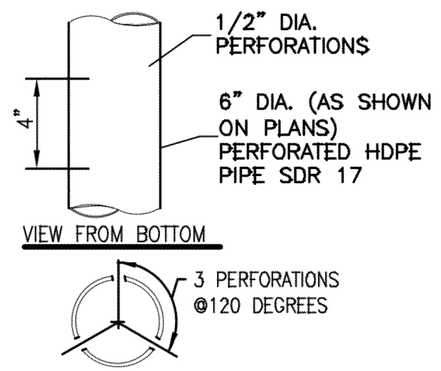

6" WATER COLLECTION PIPE PERFORATION (N.T.S)

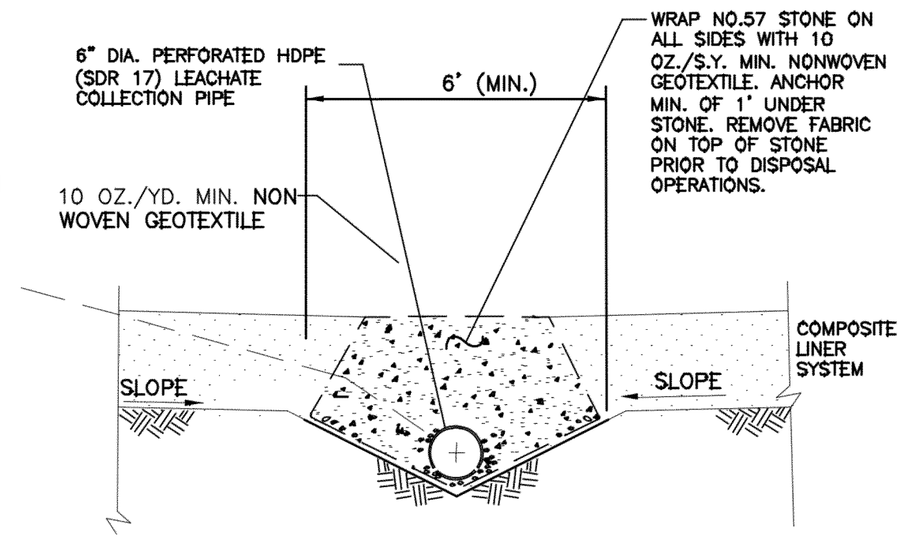

2 / – 6" WATER COLLECTION PIPE & TRENCH

SCALE: N.T.S.

REV.	DATE
0	5/5/2015 4:02 PM

PREPARED BY:

OASIS CONSULTING SERVICES
45 ROSWELL STREET
ROSWELL, GEORGIA 30075
PHONE: (678) 739-2400
FAX: (770) 552-5550

PREPARED FOR:

AES - PR TOTAL ENERGY PLANT
GUAYAMA, PUERTO RICO

SITE:

AES - PR TOTAL ENERGY PLANT
GUAYAMA, PUERTO RICO

PROJECT:

ASH CELL CONSTRUCTION PLAN

TITLE:

DETAILS I

DESIGN BY:	S.SIN	DATE BY:	5/1/15
DRAWN BY:	S.SIN	PROJECT NO.:	XX-XXXX
CHECKED BY:	M.MONTELEONE	FILE:	
REVIEWED BY:	M.MONTELEONE	SHEET NO.:	REV.:
APPROVED BY:	M.MONTELEONE	4 OF 6	0

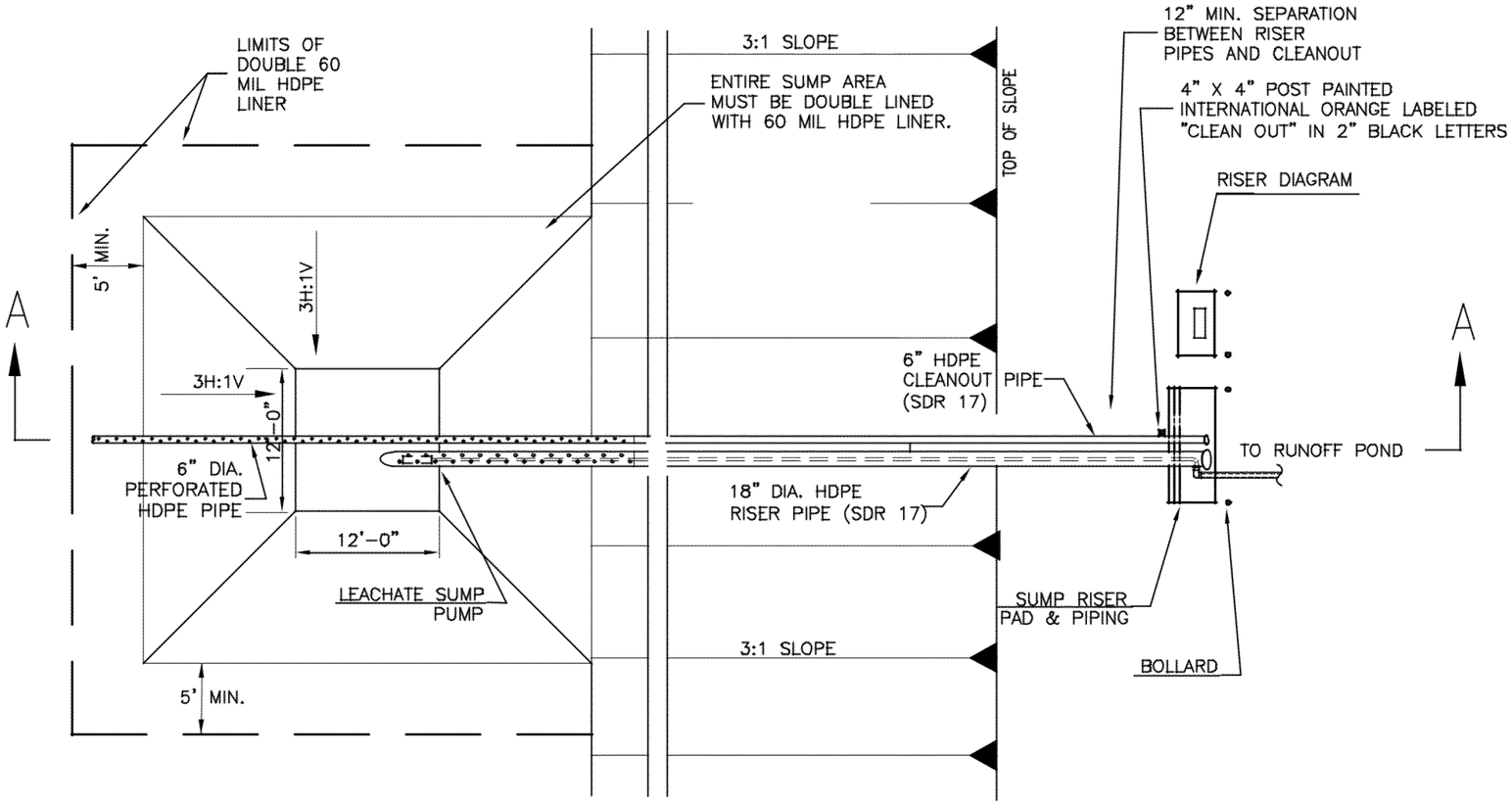

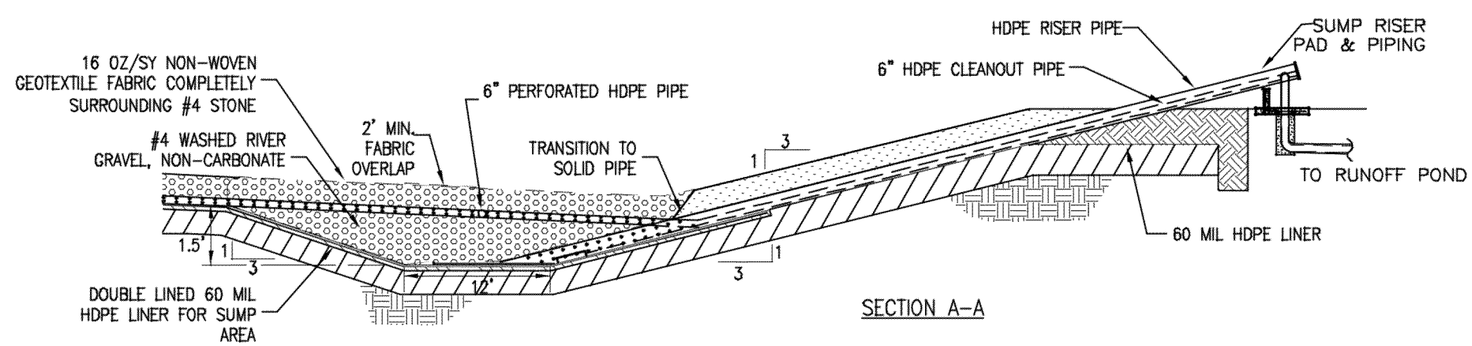

1 — DETAILS (TYP)
WATER COLLECTION SUMP
SCALE: N.T.S.

REV.	DATE
0	5/5/2015 4:02 PM

PREPARED BY:

OASIS CONSULTING SERVICES
45 ROSWELL STREET
ROSWELL, GEORGIA 30075
PHONE: (678) 739-2400
FAX: (770) 552-5550

PREPARED FOR:

AES - PR TOTAL ENERGY PLANT
GUAYAMA, PUERTO RICO

SITE:
AES - PR TOTAL ENERGY PLANT
GUAYAMA, PUERTO RICO

PROJECT:
ASH CELL CONSTRUCTION PLAN

TITLE:
DETAILS II

DESIGN BY:	S.SIN	DATE BY:	5/1/15
DRAWN BY:	S.SIN	PROJECT NO.:	XX-XXXX
CHECKED BY:	M.MONTELEONE	FILE:	
REVIEWED BY:	M.MONTELEONE	SHEET NO.:	REV.:
APPROVED BY:	M.MONTELEONE	5 OF 6	0

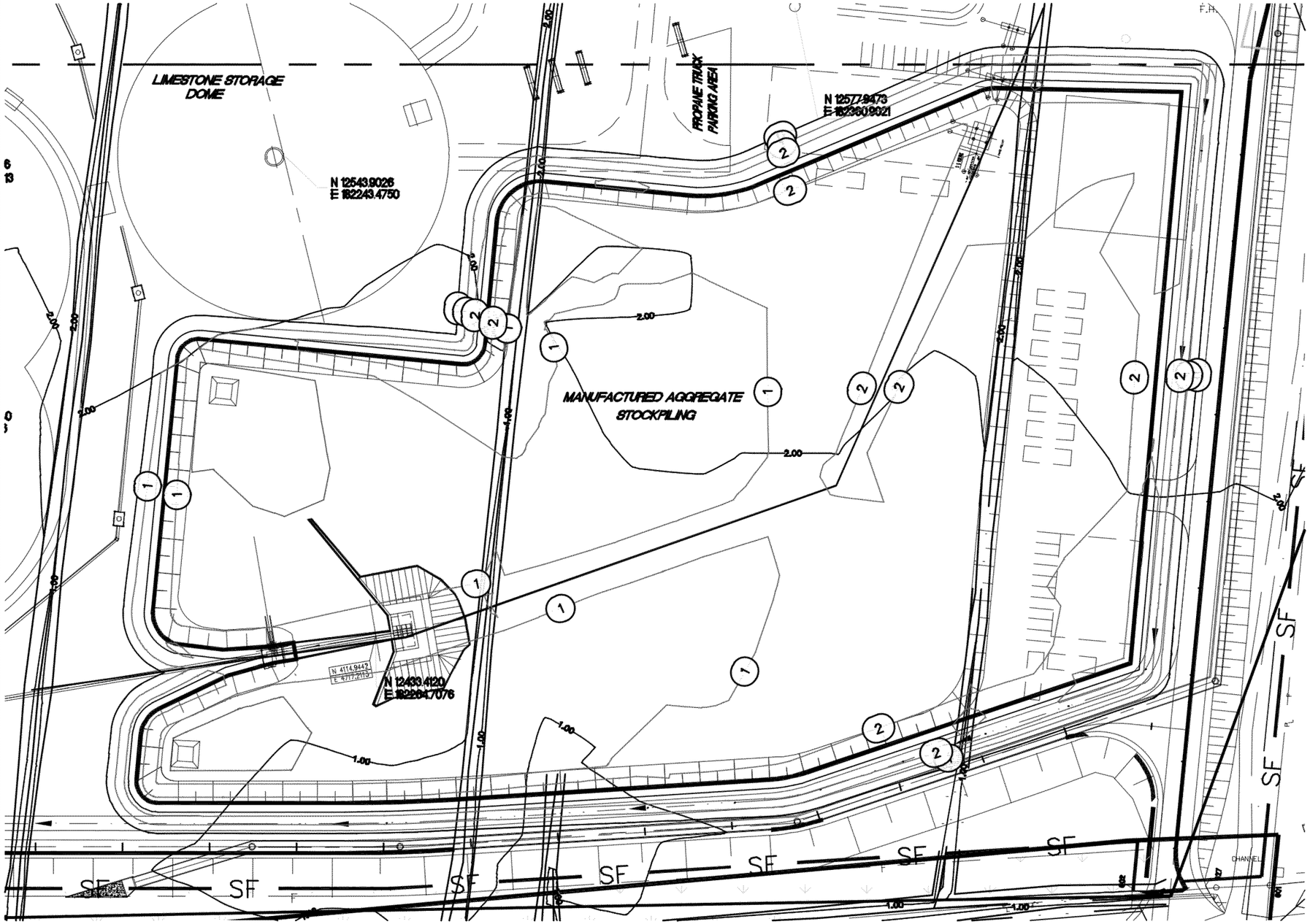

LEGEND

5 — PROPOSED GRADE (METER)

CELL AREA = 7.1 AC
GRADING AREA = 8.7 AC
WATER COLLECTION SYSTEM = 500M

VOLUME

BASE SURFACE	EG SURFACE
COMPARISON SURFACE	CELL SURFACE
CUT VOLUME (UNADJUSTED)	497.71 CU. YD.
FILL VOLUME (UNADJUSTED)	64988.24 CU. YD.
NET VOLUME (UNADJUSTED)	64490.53 CU. YD.<FILL>
CUT VOLUME (UNADJUSTED)	380.53 CU. M.
FILL VOLUME (UNADJUSTED)	49687.07 CU. M.
NET VOLUME (UNADJUSTED)	49306.55 CU. M.<FILL>

0 30 60 Meters

SCALE IN METER

REV.	DATE
0	5/5/2015 4:02 PM

PREPARED BY:

OASIS CONSULTING SERVICES
45 ROSWELL STREET
ROSWELL, GEORGIA 30075
PHONE: (678) 739-2400
FAX: (770) 552-5550

PREPARED FOR:

AES - PR TOTAL ENERGY PLANT
GUAYAMA, PUERTO RICO

SITE:

AES - PR TOTAL ENERGY PLANT
GUAYAMA, PUERTO RICO

PROJECT:

ASH CELL CONSTRUCTION PLAN

TITLE:

COMPONENTS QUANTITY

DESIGN BY:	S.SIN	DATE BY:	5/1/15
DRAWN BY:	S.SIN	PROJECT NO.:	XX-XXXX
CHECKED BY:	M.MONTELEONE	FILE:	
REVIEWED BY:	M.MONTELEONE	SHEET NO.:	REV.:
APPROVED BY:	M.MONTELEONE	6 OF 6	0

APPENDIX 3

RESISTEX® PLUS ST CERTIFIED PROPERTIES

MATERIAL PROPERTY	TEST METHOD	TEST FREQUENCY ft2(m2)	REQUIRED VALUES
Bentonite Swell Index[1]	ASTM D 5890	1 per 50 tonnes	24 mL/2g min.
Bentonite Fluid Loss[1]	ASTM D 5891	1 per 50 tonnes	18 mL max.
Bentonite Mass/Area[2]	ASTM D 5993	40,000 ft^2 (4,000 m^2)	0.75 lb/ft^2 (3.6 kg/m^2) min
GCL Tensile Strength[3]	ASTM D 6768	200,000 ft^2 (20,000 m^2)	30 lbs/in (53 N/cm) MARV
GCL Peel Strength[3]	ASTM D 6496	40,000 ft^2 (4,000 m^2)	3.5 lbs/in (6.1 N/cm) min
GCL Hydraulic Conductivity[4]	ASTM D 6766	Annually	<1 x 10^{-8} cm/sec with incinerator ash leachate (see note 4)
GCL Hydrated Internal Shear Strength[5]	ASTM D 5321 ASTM D 6243	Periodic	500 psf (24 kPa) typ @ 200 psf

Resistex Plus ST is a reinforced GCL consisting of a layer of granular sodium bentonite between a nonwoven and a woven geotextile, which are needlepunched together. The sodium bentonite in Resistex Plus ST is modified with a proprietary polymer to improve chemical resistance against selected contaminants. Site-specific compatibility testing is recommended.

Notes

1 Bentonite property tests performed at a bentonite processing facility before shipment to CETCO's GCL production facilities.

2 Bentonite mass/area reported at 0 percent moisture content.

3 All tensile strength testing is performed in the machine direction using ASTM D 6768. All peel strength testing is performed using ASTM D 6496. Upon request, tensile and peel results can be reported per modified ASTM D 4632 using 4 inch grips.

4 Hydraulic conductivity/compatibility testing per ASTM D6766 at a confining pressure of 5 psi and a hydraulic head of 2 psi, for a minimum of 6 pore volumes of flow (PVF). Direct permeation (no freshwater prehydration) with an incinerator ash leachate with an estimated ionic strength of 1.25 M and a Ratio of Monovalent to Divalent Cations (RMD) = 0.96 $M^{1/2}$.

5 Peak values measured at 200 psf (10 kPa) normal stress for a specimen hydrated for 48 hours. Site-specific materials, GCL products, and test conditions must be used to verify internal and interface strength of the proposed design.

800.527.9948 Fax 847.577.5566

For the most up-to-date product information, please visit our website, www.cetco.com.
A wholly owned subsidiary of AMCOL International Corporation. The information and data contained herein are believed to be accurate and reliable, CETCO makes no warranty of any kind and accepts no responsibility for the results obtained through application of this

information.

CETCO Lining Technologies 2870 Forbs Avenue Hoffman Estates, IL 60192
847.851.1800 800.527.9948 Fax 847.851.1899 www.cetco.com

GEOSYNTHETIC CLAY LINER COMPATIBILITY ANALYSIS
ASTM D6141 - 09

Project:	AES	Date:	May, 3rd 2015
Location:	Puerto Rico	Project Type and Citation:	Liner Compatibility BMG/LT-5-3
Requested By:	Scott S.	Sample ID:	LT15-5-3
Sample Type:	Soil	Warranty:	n/a

Test Results:

	AES Bottom Ash	AES Fly Ash	AES Gypsum
CG-50 FS (ASTM D5890)	13	14	15
CG-50 FL (ASTM D5891)	332	31	227
Chloride Content	487	945	0
pH	12.457	11.232	12.465
EC (µC/cm)	11070	6600	8210
Predicted Values	0	0	0
Ionic Strength (mol/L)	0.15	0.10	0.10
RMD M^0.5	0.05	0.76	0.001
Kolstad Predicted K (cm/s)	2.40 x 10E-07	2.1 x 10E-08	1.1 x 10E-07

CETCO Lining Technologies 2870 Forbs Avenue Hoffman Estates, IL 60192
847.851.1800 800.527.9948 Fax 847.851.1899 www.cetco.com

ICP Elemental Analysis

Element	AES bottom Ash	AES Fly Ash	AES gypsum
Silver	0	0	0
Aluminum	7.983	2.35	6.732
Arsenic*	0	0	0
Barium	1.212	0.0042	1.227
Calcium	1971	270.4	1461
Cadmium	0	0	0
Chromium	0.0673	0.045	0.0673
Copper	0	0	0
Iron*	0	0	0
Mercury*	0	0	0
Potassium	44.42	178.9	6.149
Magnesium	0	0.3975	0
Sodium	205.1	1350	0
Nickel	0	0	0
Phosphorus	0	0	0
Lead*	0	0	0
Selenium*	0.0788	0	0
Zinc	0	0	0
Lead*	0	0	0
Sulfur	679.5	662.6	399
Antimony	0	0	0
Titanium	0	0	0
Zinc	0	0	0
Zircon	0	0	0.009

1) Accuracy is ±0.005 ppm except for arsenic, iron, mercury, lead and selenium which have accuracy limits of 0.02 ppm.
2) The sample was diluted 1:99 prior to testing and the results scaled up by 100x.

Analyst: GP

SOLMAX

TECHNICAL DATA SHEET

Geomembrane HDPE Textured DS

Solmax, 2801 Boul. Marie-Victorin, Varennes, Qc, Canada, J3X 1P7
Tel.: (450) 929-1234 Fax: (450) 929-2550 www.solmax.com

PROPERTY	TEST METHOD	FREQUENCY (1)	UNIT Imperial	Solmax 460WT-1000
SPECIFICATIONS				An AMCOL Company
Nominal Thickness	-	-	mils	60.0
Thickness (min. avg.)	ASTM D-5994	Every roll	mils	57.0
Lowest individual for 8 out of 10 values			mils	54.0
Lowest individual for 10 out of 10 values			mils	51.0
Asperity Height (min. avg.) (3)	ASTM D-7466	Every roll	mils	16
Resin Density	ASTM D-1505	1/Batch	g/cc	> 0.932
Melt Index - 190/2.16 (max.)	ASTM D-1238	1/Batch	g/10 min	1.0
Sheet Density (8)	ASTM D-1505	Every 2 rolls	g/cc	≥ 0.940
Carbon Black Content (9)	ASTM D-4218	Every 2 rolls	%	2.0 - 3.0
Carbon Black Dispersion	ASTM D-5596	Every 6 rolls	Category	Cat. 1 & Cat. 2
OIT - standard (avg.)	ASTM D-3895	1/Batch	min	100
Tensile Properties (min. avg) (2)	ASTM D-6693	Every 2 rolls		
Strength at Yield			ppi	132
Elongation at Yield			%	13
Strength at Break			ppi	132
Elongation at Break			%	150
Tear Resistance (min. avg.)	ASTM D-1004	Every 6 rolls	lbf	45
Puncture Resistance (min. avg.)	ASTM D-4833	Every 6 rolls	lbf	120
Dimensional Stability	ASTM D-1204	Certification	%	± 2
Stress Crack Resistance (SP-NCTL)	ASTM D-5397	1/Batch	hr	500
Oven Aging - % retained after 90 days	ASTM D-5721	Per formulation (5)		
HP OIT (min. avg.)	ASTM D-5885		%	80
UV Resistance - % retained after 1600 hr	GRI-GM-11	Per formulation (5)		
HP-OIT (min. avg.)	ASTM D-5885		%	50
SUPPLY SPECIFICATIONS (Roll dimensions may vary ±1%)				
Roll Dimension - Width	-		ft	22.3
Roll Dimension - Length	-		ft	540
Area (Surface/Roll)	-		sf	12,042
Color (one side) (4)	-	-	-	White

NOTES

1. Testing frequency based on standard roll dimensions and one batch is approximately 180,000 lbs (or one railcar).
2. Machine Direction (MD) and Cross Machine Direction (XMD or TD) average values should be on the basis of 5 specimens each direction.
3. Lowest individual and 8 out of 10 readings as per GRI-GM13 / 17, latest version.
4. Black or grey spots may be visible on the textured surface. Smooth edge may not have the same consistent shade of color as the membrane itself. The colored layer may cause the carbon black content results to be higher than 3%.
5. Certified by black formulation on geomembrane roll or molded plaque.
8. Correlation table is available for ASTM D792 vs ASTM D1505. Both methods give the same results.
9. Correlation table is available for ASTM D1603 vs ASTM D4218. Both methods give the same results.

* All values are nominal test results, except when specified as minimum or maximum.

* The information contained herein is provided for reference purposes only and is not intended as a warranty of guarantee. Final determination of suitability for use contemplated is the sole responsability of the user. SOLMAX assumes no liability in connection with the use of this information.

Sales Office:
Engineered Synthetic Products, Inc.
Phone (770) 564-1857
Fax (770) 564-1818
www.espgeosynthetics.com
www.skaps.com

DRAINAGE PRODUCT DESCRIPTION SHEET
TRANSNET 270-2-6

Transnet 270-2-6 is a superior quality drainage media made by extruding two sets of HDPE strands together to form a diamond shaped net. The net is then heat laminated to a 6 ounce non-woven fabric. This three dimensional structure provides excellent planar liquid flow. The Transnet 270-2-6 conforms to the physical property values listed below:

NET PROPERTY	TEST METHOD	UNITS	MINIMUM AVERAGE ROLL VALUE
Thickness	ASTM D-5199	mils	270 +/- 20
Density of Polymer	ASTM D-1505	g/cm^3	0.94
Carbon Black	ASTM D-4218	%	2-3
Tensile Strength	ASTM D-5035	lb/in	75
Transmissivity (geocomposite)	ASTM D-4716	m^2/sec	5×10^{-4} *
Ply Adhesion	ASTM D-7005	lbs/in	1

*Transmissivity measured using water at 20 Degrees C with the gradient of 0.1, between steel plates, under a confining pressure of 10,000 psf, after 15 minutes. Values may vary based on dimension of the transmissivity specimen and specific laboratory.

STYLE SKAPS GE160

SKAPS GE160 is a superior quality, nonwoven geotextile produced by needlepunching together 100% polypropylene staple fibers in a random network to form a high strength dimensionally stable fabric. The polypropylene fibers are specially formulated to resist ultraviolet light deterioration, and are inert to commonly encountered soil chemicals. The fabric will not mildew, is non-biodegradable, and is resistant to damage from insects and rodents. Polypropylene is stable within a ph range of 2 to 13. SKAPS GE160 conforms to the physical property values below:

FABRIC PROPERTY	TEST METHOD	UNITS	MINIMUM AVERAGE ROLL VALUE
Weight	ASTM D-5261	oz	6.0
Grab Tensile	ASTM D-4632	lbs	160
Grab Elongation	ASTM D-4632	%	50
Trap Tear	ASTM D-4533	lbs	65
CBR Puncture	ASTM D-6241	lbs	450
Water Flow Rate	ATMD D-4491	gpm/ft^2	125
Permittivity*	ASTM D-4491	sec^{-1}	1.63
AOS	ASTM D-4751	US Sieve	70 max
UV Resistance (certified)	ASTM D-4355	% hrs	70 @ 500

*At time of manufacturing; handling may change these properties.

To the best of our knowledge the information contained herein is accurate. However, SKAPS Industries. cannot anticipate all conditions under which SKAPS' product information and our products, or the products of other manufacturers in combination with our products, may be used. We accept no responsibility for results obtained by the application of this information or the safety or suitability of our products either alone or in combination with other products. Final determination of the suitability of any information or material for the use contemplated, of its manner of use, and whether the suggested use infringes any patents is the sole responsibility of the user.

TENCATE
Mirafi®

TENCATE GEOSYNTHETICS
Americas

Mirafi® S1200

Drainage Separation

Mirafi® S1200 is a needlepunched nonwoven geotextile composed of polypropylene fibers, which are formed into a stable network such that the fibers retain their relative position. Mirafi® S1200 is inert to biological degradation and resists naturally encountered chemicals, alkalis, and acids.

TenCate Geosynthetics Americas Laboratories are accredited by a2La (The American Association for Laboratory Accreditation) and Geosynthetic Accreditation Institute – Laboratory Accreditation Program (GAI-LAP).

Mechanical Properties	Test Method	Unit	Minimum Average Roll Value
Weight	ASTM D5261	oz/yd^2 (g/m^2)	12.0 (407)
Thickness	ASTM D5199	mils (mm)	130 (3.3)
Grab Tensile Strength	ASTM D4632	lbs (N)	310 (1380)
Grab Tensile Elongation	ASTM D4632	%	50
Trapezoid Tear Strength	ASTM D4533	lbs (N)	120 (534)
CBR Puncture Strength	ASTM D6241	lbs (N)	900 (4005)
Apparent Opening Size (AOS)[1]	ASTM D4751	U.S. Sieve (mm)	100 (0.15)
Permittivity	ASTM D4491	sec^{-1}	0.9
Permeability	ASTM D4491	cm/sec	0.3
Flow Rate	ASTM D4491	gal/min/ft^2 (l/min/m^2)	65 (2648)
UV Resistance (at 500 hours)	ASTM D4355	% strength retained	80

1 ASTM D4751: AOS is a Maximum Opening Diameter Value

Physical Properties	Unit	Typical Value
Roll Dimensions (width x length)	ft (m)	15 x 300 (4.5 x 91)
Roll Area	yd^2 (m^2)	500 (418)
Estimated Roll Weight	lb (kg)	424 (192)

© 2012 TenCate Geosynthetics Americas
Mirafi® is a registered trademark of Nicolon Corporation

Disclaimer: TenCate assumes no liability for the accuracy or completeness of this information or for the ultimate use by the purchaser. TenCate disclaims any and all express, implied, or statutory standards, warranties or guarantees, including without limitation any implied warranty as to merchantability or fitness for a particular purpose or arising from a course of dealing or usage of trade as to any equipment, materials, or information furnished herewith. This document should not be construed as engineering advice.

GAI-LAP-25-97

Made in USA

365 South Holland Drive
Pendergrass, GA 30567

Tel 706 693 2226
Tel 888 795 0808

Fax 706 693 4400
www.tencate.com

FGS000386
ETQR10

Testing Lab 1291.01 & 1291.02

Appointment

From: Angelique Collier [angelique.collier@aes.com]
Sent: 9/23/2021 3:13:36 PM
To: Angelique Collier [angelique.collier@aes.com]; Kijanka, Kevin [Kijanka.Kevin@epa.gov]; Cuevas, David [Cuevas.David@epa.gov]; sputrich@haleyaldrich.com; Carlos Gonzalez [carlosm.gonzalez@aes.com]; Hector Avila [hector.avila@aes.com]; Erick Antonio Rocher Vazquez [erick.rocher@aes.com]; Jesus Bolinaga [jesus.bolinaga@aes.com]; Elias Sostre [elias.sostre@aes.com]; Boxerman, Samuel B. (sboxerman@sidley.com) [sboxerman@sidley.com]; Daniel DeVougas [daniel.devougas@aes.com]; Karen Ortiz Quiñones [karen.ortiz@aes.com]; Carpenter, Dale [Carpenter.Dale@epa.gov]; Jackson, Mary [Jackson.Mary@epa.gov]; Grossman, Lenny [Grossman.Lenny@epa.gov]; Behan, Frank [Behan.Frank@epa.gov]; Pradeep Jain [pjain@innovativetec.com]; Yonce, Stacey [yonce.stacey@epa.gov]; Huggins, Richard [Huggins.Richard@epa.gov]; Raack, Pete [Raack.Pete@epa.gov]; Conetta, Benny [Conetta.Benny@epa.gov]

Subject: AES Puerto Rico CCR Selected Remedy
Location: Microsoft Teams Meeting

Start: 10/1/2021 6:00:00 PM
End: 10/1/2021 7:00:00 PM
Show Time As: Tentative

Looping in David and Kevin

-----Original Appointment-----
From: Angelique Collier <angelique.collier@aes.com>
Sent: Tuesday, September 21, 2021 4:57 PM
To: Angelique Collier; sputrich@haleyaldrich.com; Carlos Gonzalez; Hector Avila; Erick Antonio Rocher Vazquez; Jesus Bolinaga; Elias Sostre; Boxerman, Samuel B. (sboxerman@sidley.com); Daniel DeVougas; Karen Ortiz Quiñones; Carpenter, Dale; Jackson, Mary; Grossman, Lenny; Behan, Frank; Pradeep Jain; Yonce, Stacey; Huggins, Richard; Raack, Pete; Conetta, Benny
Subject: AES Puerto Rico CCR Selected Remedy
When: Friday, October 1, 2021 2:00 PM-3:00 PM (UTC-05:00) Eastern Time (US & Canada).
Where: Microsoft Teams Meeting

Microsoft Teams meeting

Join on your computer or mobile app

Ex. 6 Personal Privacy (PP)

Find a local number | Reset PIN

Learn More | Meeting options

To: Rivera, Jose[Rivera.Jose@epa.gov]; Rodriguez, Nancy[Rodriguez.Nancy@epa.gov]
Cc: Elias Sostre[elias.sostre@aes.com]
From: Jesus Bolinaga[jesus.bolinaga@aes.com]
Sent: Fri 6/25/2021 7:10:57 PM (UTC)
Subject: AES-PR (MSGP Number PRR053093) // Response to EPA's May 6, 2021 Inspection Report
Response to inspection letter_062421.pdf

Dear Ms. Rodríguez and Mr. Rivera,

Please see attached AES-PR's letter responding to EPA's May 6, 2021 Inspection Report. If you have any questions about this letter, please feel free to contact me.

Regards,

Jesus I Bolinaga
Market Business Leader
The AES Corporation
jesus.bolinaga@aes.com
Mobile: Ex. 6 Personal Privacy (PP)

aes Puerto Rico

PO Box 1890
Guayama, PR 00785
Tel. 787 866 8117
Fax 787 866 8139
www.aespuertorico.com

June 25, 2021

VIA EMAIL and CERTIFIED MAIL

Nancy Rodríguez, P.E. (Rodriguez.nancy@epa.gov)
Chief Multimedia Permits and Compliance Branch

Attn: Mr. José A. Rivera, BSCE (Email: Rivera.jose@epa.gov)
Lead Environmental Engineer
Clean Water Act Team

Caribbean Environmental Protection Division
US Environmental Protection Agency, Region 2
City View Plaza, Suite 7000
#48 165 RD Km 1.2
Guaynabo, PR 00968-8069

Re: MSGP Number PRR053093; EPA May 6 Inspection Report

Dear Ms. Rodríguez and Mr. Rivera:

AES Puerto Rico, L.P. (AES-PR) is in receipt of the Report associated with the May 6, 2021 inspection that Mr. José A. Rivera of the U.S. Environmental Protection Agency (EPA) performed at the AES-PR's facility in Guayama, Puerto Rico. AES-PR has reviewed the observations and comments included in the Report. AES-PR is providing in this submittal responses to the observations and comments included therein.

EPA 4.a: *Storm Water Automatic Sampling Equipments - Mr. Ávila stated that all three (3) automatic sampling units installed at the Facility for the collection of storm water discharge samples at the sampling points for Outfall 001, Outfall 002, and Outfall 003, were repaired instead of replaced.*

> **AES-PR Response**: As communicated with EPA in a letter dated October 6, 2020 from Jesús Bolinaga to Mr. José Rivera submitted via electronic mail, AES-PR installed new automatic sampling equipment at Outfalls 001, 002, and 003 to enable AES-PR to take multiple grab samples. In addition, AES-PR has indeed made repairs to automatic sampling equipment in the past as required to ensure ongoing functionality. This may, at times, include replacement of certain components.

EPA 4.b-4.d: *Sampling Point for Outfall 001 (Refer to Picture 1); Sampling Point for Outfall 002 (Refer to Picture 2); Sampling Point for Outfall 003 (Refer to Picture 3)*

AES-PR Response: AES-PR is in the process of reviewing the automatic sampling equipment configurations to determine whether adjustments or improvements may be needed. AES-PR expects to complete this review by July 15, 2021 and will make appropriate changes, if any, following that review.

EPA 4.e.1: *100-Year Storm Water Concrete Channel: The soil above one of the culvert pipes has become displaced and has sunken downward into the pipe, significantly damaging the pipe and reducing its hydraulic capacity as well as allowing soil to be discharged into the channel. Moreover, Mr. Rivera observed that there were no erosion controls around hole. EPA has reason to believe these conditions have been ongoing for some time. (Refer to Picture 4)*

AES-PR Response: The area identified in Picture 4 is part of TAPI's stormwater discharge conveyance system. It is also not in an area of industrial activity.

EPA 4.e.2: *100-Year Storm Water Concrete Channel: Segments of the channel, including the headwall area where flow is discharged into wetlands, were observed to have overgrown vegetation, lack of maintenance, flow blockage and stagnant water. (Refer to Pictures 5 and 6)*

AES-PR Response: The area identified in Pictures 5 and 6 are not areas of flow for stormwater discharges from AES-PR. Rather, Pictures 5 and 6 show an area of flow for the TAPI discharge.

EPA 4.f: *Coal Pile Pond (Refer to Pictures 7 and 8)*

1) The surface of the pond had numerous locations in which the liner is floating and/or unanchored.

2) Several areas had significant accumulation of sediments and other solids and floating materials.

3) The volume capacity has been significantly reduced due to liner's displacement to the surface.

AES-PR Response: Air bubbles are not uncommon in unballasted geomembranes. The effectiveness of the coal pile run-off pond (CPROP) is not hindered by the current level of sediment accumulation or any unanchored areas of liner. Based on the Hydrologic/Hydraulic Study of 2012, the 100-year, 24-hour rain event is 14.600 inches. The coal pile run-off pond has a design total capacity of 15,229,535 gallons. Therefore, based on the size of the area which drains to the coal pile run-off pond, the 100-yr, 24-hour rain event volume draining into the CPROP is 12,137,965 gallons. On January 18, 2021, a bathymetry survey of the coal pile run-off pond was completed to calculate the sediment volume accumulated above the design elevation grade, which concluded a sediment volume accumulation of 2,016,306.7 gallons.

Therefore, the available volume of the coal pile run-off pond is 13,213,228.3 gallons. The corresponding freeboard is 1,075,263.3 gallons. In conclusion, the coal pile run-off pond indeed has the volume capacity to hold a 100-yr, 24-hr rain event and its effectiveness is not hindered by the current level of accumulation or any unanchored areas of liner.

EPA 4.g: *Storm Water Pond (Picture 9)*

1) The surface of the pond had locations in which the liner is floating and/or unanchored.
2) Several areas had significant accumulation of sediments, vegetation growth, and other solids and floating materials.
3) The volume capacity has been significantly reduced due to portions of the liner's displacement to the surface.

AES-PR Response: Consistent with common industry practice and EPA guidance for BMPs[1,2,3], the normal operating practice of AES-PR is to clean the stormwater pond when approximately half of its capacity is unavailable (due to, for example, sediment accumulation or unanchored liner) as sediment will accumulate over time due to the nature of the operation. At the time of the inspection, and currently, greater than half of the capacity of the stormwater pond remains available and the effectiveness of the stormwater pond as a BMP is not hindered by the current level of accumulation or any unanchored areas of liner. Air bubbles are not uncommon in unballasted geomembranes. Nonetheless, AES-PR plans to proceed with cleaning the stormwater pond[4].

EPA 4.h: *Coal Particles*

1) Internal Road Shoulder - Coal particles on the ground and under gravel. (Refer to Picture 10)
2) Coal Crusher - Coal particles under the gravel. (Refer to Pictures 11 and 12)

AES-PR Response: AES-PR is further inspecting the areas and will clean any identified coal, and replace gravel, as needed, expeditiously.

EPA 4.i.1: *Facility's Grounds and Soils: Soil and grounds without soil stabilization. (Refer to Picture 13)*

AES-PR Response: As indicated in the 45-day notification, submitted on June 19, 2021, AES-PR removed loose material and swept the area identified in Picture 13, restricted vehicular traffic and added new clean gravel as needed, but to implement a more permanent solution, asphalt repair, it will take more time due to the resources, planning and equipment required for completion. This action is estimated to be completed by September 30, 2021.

EPA 4.i.2: *Facility's Grounds and Soils: Waste pile of sediments and other unknown materials without erosion controls. (Refer to Picture 14)*

AES-PR Response: Removal of the material shown in Picture 14 was completed in early June 2021.

EPA 4.j.1: *Best Management Practices: The super silt fence covering the gabions fencing is damaged, loosed and/or improperly installed. (Refer to Picture 15)*

---

[1] EPA 832-R-92-006, September 1992, Storm Water Management For Industrial Activites, Developing Pollution Prevention Plans And Best Management Practices, pp. E-2, E-4, E-6, E-8, E-10,
[2] ASTM 2003. Standard Practice for Silt Fence Installation, D 6462-03(2008). West Conshohocken, PA: American Society of Testing Materials International. www.astm.org/SEARCH/search-reskin.html?query=D6462-03&siteType=store-standards&searchType=standards-full
[3] EPA Stormwater Best Management Practice, Silt Fences, https://www3.epa.gov/npdes/pubs/siltfences.pdf
[4] AES-PR currently expects this activity to be completed by July 31, 2021.

AES-PR Response: At the time of the inspection, and currently, there is no Agremax in the area of the super silt fence shown in Picture 15 and described in the Inspection Report at EPA 4.q 2. Nonetheless, AES-PR has repaired the super silt fence in the area.

EPA 4.j.2: *Best Management Practices: The installation of the super silt fence on a portion north of the coal pile had not been completed and its installation had been pending for more than 45 days. (Refer to Picture 16)*

AES-PR Response: AES-PR completed installation/repairs to the super silt fence on May 19, 2021. It should be noted that the super silt fence is one of several layers of containment for the coal stockpile and is intended to diminish or reduce the accumulation of coal in the concrete swale that surrounds the stockpile. The swale in turn conveys the runoff (and any sediment) to the sediment trap at the inlet to the coal pile runoff pond and eventually flows into the pond itself. At the time of the inspection, as shown in the photo, there was no accumulation of coal in the concrete swale.

EPA 4.k.1: *Runoff Collection and Conveyance: The concrete swale has vegetation growth and sediment accumulation. (Refer to Picture 17)*

AES-PR Response: There was no vegetation growth or sediment accumulation in the concrete swale at the observed location. The observed material was grass clippings following landscaping and mowing that had occurred earlier on the date of the inspection. The clippings were subsequently removed. The effectiveness of the concrete swale was not hindered or diminished.

EPA 4.k.2: *Storm inlet is inadequately protected. (Refer to Picture 18)*

AES-PR Response: The inlet filter was adjusted to correct any potential gaps promptly on May 10, 2021 following EPA's May 6 inspection.

EPA 4 "Comment": *Storm water precipitation has access to the inside of the Ship Loader Tower. This runoff can pick up pollutants and can be discharged to the concrete pier slab underneath the Tower. The runoff from the slab is conveyed into Outfall 001. Such runoff carries, among other things, Agremax and coal particles.*

AES-PR Response: AES-PR has inspected the ship loader tower, repaired/replaced any siding and toe guards, where needed, and confirmed that all rubber curtains are intact[5]. It should be noted that the pier slab surface has several layers of BMPs to prevent discharge of pollutants including sweeping and truck vacuuming of the pier in addition to the filter inserts in the outlets leading to the collection manifold. No pollutants were identified in the floor of the pier at the time of the inspection.

EPA 4.l: *AES' Self-Facility Inspections (Refer to Pictures 19 to 26)*

---

[5] These actions occurred on or before approximately June 2, 2021 with the exception of certain siding repairs for the Ship Loader Building located at the Dock Area as described in the 45-day notification submitted to EPA on June 19, 2021.

1) AES's routine facility inspections at the Coal Hopper Tower failed to examine or look out for all areas in which materials come into contact with stormwater runoff and/or precipitation.
2) AES's routine facility inspections at the Ship Loader Tower failed to examine or look out for all areas in which materials come into contact with stormwater runoff and/or precipitation during storm water events.

AES-PR Response: AES-PR has improved its routine facility inspection forms to specify that inspections of these areas must include all levels, floors, walls, and ceilings to ensure there are no gaps or holes from which material can escape. Future inspections will be conducted accordingly.

EPA 4.l.3: *AES's routine facility inspections at the ground areas between the Cooling Tower and Mechanical Shop failed to examine or look out for all areas in which materials come into contact with stormwater runoff and/or precipitation during storm water events.*

AES-PR Response: AES-PR inspections appropriately include the referenced ground areas.

EPA 4.m.1: *Unpermitted Discharge Points into Waters of the United States: Based on Mr. Rivera's observations made during an inspection conducted in November 2019, unpermitted storm water from points at the Ship Loader Tower discharges into Las Mareas Bay. (Refer to Picture 27). These conditions were ongoing as of the May 2021 site visit.*

AES-PR Response: The damaged toe guard identified in Picture 27 was promptly repaired following the inspection. Additionally, AES-PR has inspected the ship loader tower, repaired/replaced any siding and toe guards, where needed, and confirmed that all rubber curtains are intact. In addition, AES-PR has improved its routine facility inspection forms to specify that inspections of these areas must include all levels, floors, walls, and ceilings to ensure there are no gaps or holes from which material can escape. Future inspections will be conducted accordingly.

EPA 4.m.2: *Unpermitted Discharge Points into Waters of the United States: Based on Mr. Rivera's observations made during an inspection conducted in November 2019, unpermitted storm water from Transfer House # 3 discharges into wetlands. (Refer to Picture 28). These conditions were ongoing as of the May 2021 site visit.*

AES-PR Response: AES-PR addressed any potential for discharge from Transfer House 3 following EPA's November 2019 inspection, as reported to AES-PR by EPA by letter dated June 8, 2020. As indicated in the Compliance Plan of Action submitted to EPA on August 14, 2020, a vegetative buffer exists between the fence and the adjacent land and a low wall has been extended (east side of tower) to ensure that stormwater runoff does not discharge to the adjacent land. In addition, AES-PR has added gravel to create a slope preventing flow toward the adjacent land (west side of tower). As such, this area is graded such that stormwater from industrial areas flows away from the wetlands. No rills or gulleys were present. There is no evidence of unpermitted discharges.

EPA 4.m.3: *Unpermitted Discharge Points into Waters of the United States: Unpermitted storm water from points at the Coal Hopper Tower discharges into Las Mareas Bay. (Refer to Picture 29)*

AES-PR Response: AES-PR has inspected the coal hopper tower, repaired/replaced any siding and toe guards, where needed, and confirmed that all rubber curtains are intact[6]. The limited amount of precipitation which may enter the coal hopper tower through the area of the rubber curtains would ultimately reach the coal hopper tower stormwater storage tank, which is observed/inspected following all loading events and measurable precipitation events. If the stormwater storage tank is holding water at the time of these observations/inspections it is pumped/emptied accordingly.

EPA 4.m.4: *Unpermitted Discharge Points into Waters of the United States: Embedded pipes on the 100-Year Storm Water Concrete Channel are unchanged from Mr. Rivera's November 2019 inspection of the Facility.*

AES-PR Response: AES-PR has outlined previously to EPA why those are not unpermitted discharges including during a video conference held on December 8, 2020 with representatives from AES-PR, its consultant, Haley & Aldrich, and EPA representatives José Rivera and Nancy Rodriguez. *See also* Haley & Aldrich, Presentation to USEPA (Dec. 8, 2020) (confidential, provided for settlement only and not subject to FOIA); Letter from J. Bolinaga to J. Rivera (Dec. 18, 2020) (confidential, provided for settlement only and not subject to FOIA); Haley & Aldrich, Summary of Evaluation (June 7, 2021) (confidential, provided for settlement only and not subject to FOIA).

EPA 4.m.5: *Unpermitted Discharge Points into Waters of the United States: Coal Hopper Tower's storm water storage tank can overflow and carry coal particles into Las Mareas Bay. (Refer to Picture 30)*

AES-PR Response: The coal hopper tower stormwater storage tank is observed/inspected following all loading events and measurable precipitation events. If the stormwater storage tank is holding water at the time of these observations/inspections it is pumped/emptied accordingly. Even following significant storm events, AES-PR has not found the tank to be nearing its full capacity.

EPA 4.n.1: *Agremax on Wetlands: Agremax was found on ground areas underneath, around and near Transfer House 2. (Refer to Pictures 31 to 33)*

AES-PR Response: AES-PR further inspected the area around and near Transfer House 2. Any material that may have been Agremax was removed on May 22, 2021. It should be noted that the areas shown in Pictures 31 to 33 are not delineated as wetlands.

---

[6] These actions occurred on or before approximately June 2, 2021 which the exception of certain siding repairs for the Ship Loader Building located at the Dock Area as described in the 45-day notification submitted to EPA on June 19, 2021.

EPA 4.n.2: *Agremax on Wetlands: Agremax was found on areas immediately adjacent to Transfer House 3.*

AES-PR Response: AES-PR has further inspected the area around Transfer House 3 and confirmed that there is no Agremax in the area either resulting from stormwater runoff or from dust.

EPA 4.o: *Discolored and Dead Vegetation along Conveyor System (Refer to Pictures 34 to 39)*

1) Discolored and dead vegetation in areas underneath, around and near Transfer House 2.
2) Discolored and dead vegetation in areas around and near Transfer House 3.

AES-PR Response: AES-PR inspects and cleans the conveyor system areas following each loading event. Dead vegetation is not unusual during the dry season.

EPA 4.p: *Storm Water Shelters*

1) *Storm water has access to the internal areas of the Ship Loader Tower and the Coal Hopper Tower.*
2) *Lack of housekeeping, as evidenced by, among other things, debris and Agremax spread haphazardly in lower and upper decks at the Ship Loader Tower and the Coal Hopper Tower. (Refer to Picture 40 and other pictures in the Attachment concerning the Ship Loader Tower)*

AES-PR Response: AES-PR has inspected the ship loader tower, repaired/replaced any siding and toe guards, where needed, and confirmed that all rubber curtains are intact[7]. AES-PR has also inspected the coal hopper tower, repaired/replaced any siding and toe guards, where needed, and confirmed that all rubber curtains are intact. The limited amount of precipitation which may enter the coal hopper tower through the area of the rubber curtains would ultimately reach the coal hopper tower stormwater storage tank, which is observed/inspected following all loading events and measurable precipitation events. If the stormwater storage tank is holding water at the time of these observations/inspections it is pumped/emptied accordingly.

The pier slab surface has several layers of BMPs to prevent discharge of pollutants including sweeping and truck vacuuming of the pier in addition to the filter inserts in the outlets leading to the collection manifold. No pollutants were identified in the floor of the pier at the time of the inspection.

In addition, AES-PR has improved its routine facility inspection forms to specify that inspections of these areas must include all levels, floors, walls, and ceilings to ensure there are no gaps or holes from which material can escape. Future inspections will be conducted accordingly.

EPA 4.q: *Agremax Storage Area (Refer to Pictures 41 to 47)*

1) One side with accumulation of Agremax above ground (west side).

---

[7] These actions occurred on or before approximately June 2, 2021 which the exception of certain siding repairs for the Ship Loader Building located at the Dock Area as described in the 45-day notification submitted to EPA on June 19, 2021.

2) Other side in which Agremax had been removed and area had been excavated (east side).
3) Some sprinkler nozzles were in operation, and the functional capacity of other sprinkler nozzles could not be determined under the circumstances of the observations.
4) The top of Agremax pile was not graded to allow the water-mount truck to wet the areas.
5) Mr. River's estimate of the highest elevation of the Agremax stockpile is between 30 to 40 feet.
6) Certain slopes and areas where Agremax is stored were not wet.

> **AES-PR Response**: AES-PR is effectively implementing the measures outlined in its CCR and Agremax Dust Control Plan[8]. This is evidenced, in part, by the lack of fugitive dust as demonstrated in Pictures 41 to 47. At the time the photographs were taken (between 3:00 PM and 3:30 PM) sustained wind speeds were 12-13 miles per hour with gusts of 19-24 miles per hour[9].

If you have any questions or require additional information, please feel free contact me at (787) 866-8117 ext. 2212.

Sincerely,

Jesús Bolinaga
AES-PR Market Business Lead

[8] https://www.aes.com/sites/default/files/2021-02/2020_07_Fugitive-Dust-SOP_Final.pdf
[9] Based on data from AES-PR's weather station on May 6, 2021 at 5-minute intervals from 3:00PM to 3:30PM AST.