→ U.S. EPA Region V

Department of Natural Resources

cc Stan Mermall - OshKosh Area

OBSERVER CHECKLIST FOR STACK TESTS
Form 4500-32 Rev. 1-84

PCB/Dioxin, Chloroform, NOx

Date: June 23, 1992

Name of Company: P. H. Glatfelter - Bergstrom Div

Telephone Number (Include Area Code):

Street or Route: 225 West Wisconsin Ave

FID Number:

City, State, Zip Code: Neenah, WI 54956

55 139 00060

Name of Contacts: Mr Bill Hartman — Title: Envir. Assistant

Mr Dave Guenther — Envir. Manager

Name of Company Conducting Test: Mostardi - Platt

Street or Route: 1077 Entry Drive

City, State, Zip Code: Bensenville, IL 60106

Name of Test Crew Chief: Mr Scott Banach

Telephone Number (Include Area Code): 708-860-5900

Regulation: Part. = 3.0 Lb/Hr; PCB = 1.13×10^{-5} Lb/Hr; Dioxin = 1.26×10^{-8} Lb/Hr; OP = 20%; NOx = 285 PPM @ 7% O_2; Chloroform = 0.05 Lb/Hr

Stack Number: 501

Process Number: I01

Description of Process: Sludge Combustor. Paper sludge is dried and then fed into the top of a vertical incinerator. The ash is removed from the bottom. The exhaust gas goes through two heat exchangers, a baghouse, and the outlet stack.

Permit Number: 89-POY-042A Aug 19, 1991 Year Installed: 1990

Capacity of Process: 408 Wet T/Day @ 60% Moisture, 17 Wet T/Hr or 6.8 Dry T/Hr

Normal Capacity or Production Rate: Sludge Feed at 56% Certified By:

Operating Conditions of Process	6/23 Run 1	6/23 Run 2	6/24 Run 3	6/24 Run 4
Process Weight Rate (T/HR):	200 wet T/Day, 8.33 wet T/Hr @ 60% Moisture → 3.33 Dry T/Hr →			
Production Rate:				
comb. Temp.	1230°F	1745°F	1737°F	1760°F
Comb O_2		7.9%	8.0%	7.9%
stack CO @ 7% O_2		89.9 PPM	74.7 PPM	65.2 PPM
stack NOX @ 7% O_2			258 PPM	235 PPM

Description of Air Pollution Control Equipment: Baghouse

	Run 1	Run 2	Run 3	Run 4
Baghouse Outlet Temp	261°F	260°F	257°F	260°F
Δ P Across Collector (IN H_2O):	1.6"	1.7"	1.8"	1.5"

AMM 015 7-15-92

Description of Test Method

PCB/Dioxin - EPA Method 0010 - Probe, filter, condenser, XAD-2 sorbent, and impingers.
Chloroform - NIOSH Method 1003 - 2 coconut charcoal tubes in series, - .14 l/min
NOx - EPA Method 7E - Chemaluminescent analyzer

Calibration Data Dioxin Train

Pitot Cp: 0.84 Date:

DGM Y Factor: 0.988 Date: 5/27/92

Orifice Δ H@: 2.025 Date: 5/27/92

Sampling Data Dioxin

Number of Sampling Points: 24 total, 12/Port Number of Ports: 2 Stack Diameter: 57"

Duct Dimensions: — Gas Sample Method: Integrated: ✓ Grab: —

Gas Sample Analysis Method: Orsat Filter Media: Fiberglas

Orsat Leak Check: OK Orsat O_2 Check: OK Pitot, Nozzle Alignment Check: OK

Moisture Determination: Condensation: impingers Wet-Dry Bulb: —

Sketch sampling location (indicate distance upstream and downstream from flow disturbances) and sketch cross sections of duct at sampling location. Comment about the testing, procedure, plant operations, etc.

stack gas was pulled from the stack through a sampling probe and through a refrigeration unit to remove moisture. The gas then went through a heated sample line to a trailer which contained the analyzers. The test consisted of 3 one-hour sampling periods. Run 1 - 1000 - 1100, Run 2 1130 - 1230, Run 3 1300 - 1400

The chloroform train consisted of 2 tubes and a sampling pump. In order to check for break-through and still get a good sample, the run times were 30 min, 60 min, and 90 min.
0918 - 0948 1004 - 1104 1232 - 1402

PCB/Dioxin
Run 1 had a bad leak and was voided.
Run 2 - Filter a little brown, impinger fluid clear, Probe wash clear. The sample were placed in amber bottles.

Run 3 same as run 2
Run 4

Observer Joseph Perez

Department of Natural Resources

OBSERVER CHECKLIST FOR STACK TESTS SUPPLEMENT SHEET

Form 4500-32A

1-84

Name of Company	Stack Number	Process Number
P.H. Glatfelter, Neenah	501	I01

	Run 1	Run 2	Run 3	Run 4
Date of Test: PCB/Dioxin	6/23/92	6/23/92	6/24/92	6/24/92
Weather				
Sky Conditions:	overcast →			
Wind Speed (MPH):	10-15	10-15	5-10	5-10
Wind Direction:	From South	From NE	From South	From SE
Ambient Temperature (°F):	60	65	55	60
Leak Checks PCB/Dioxin				
Train Before Test:	OK	OK@11"	OK	OK@13"
Train After Test:	Bad Leak Run Voided	OK@13"	OK@13"	OK
Pitot Lines Before Test:	OK	OK	OK	OK
Pitot Lines After Test:	OK	OK	OK	OK
Stack Data PCB/Dioxin				
Average Velocity Traverse Δ P(IN H_2O):	~3.0 →			
Stack Static Pressure (± IN H_2O):	~1.0 →			
Stack Temperature (°F):	320	312	303	305
Percent Moisture:	10% →			
Percent Opacity:	0% →			
Test Data PCB/Dioxin				
Start and Stop Time of Run:	0800-1124	1228-1632	0808-1213	1301-1744
Total Number of Sampling Points:	20	24	24	24
Sampling Time Per Point (MIN):	10	10	10	10
Sampling Time Per Run (MIN):	3hr20min	4hr	4hr	4hr
Nozzle Diameter (IN):	.163	.163	.163	.163
Percent CO_2:	2	2	0.4	
Percent O_2:	18.5	18.5	19.0	
Percent CO:				
Sample Volume Per Run (DCF):		144	149	

Incinerator for Down 1353-1438

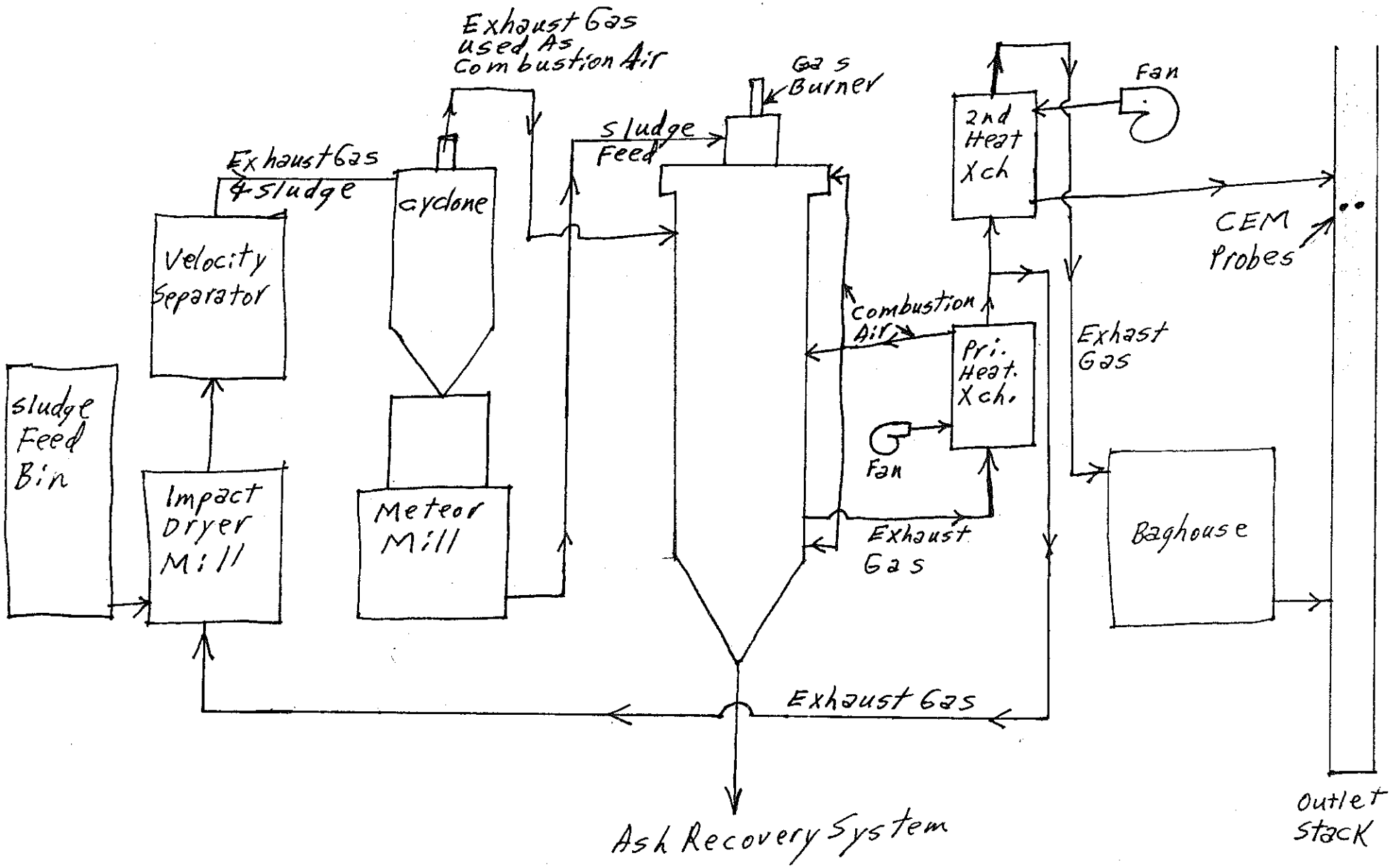
Exhaust Gas used As Combustion Air
Gas Burner
Fan
2nd Heat Xch
Sludge Feed
Exhaust Gas & Sludge
cyclone
Velocity Separator
CEM Probes
Combustion Air
Pri. Heat. Xch.
Exhast Gas
sludge Feed Bin
Impact Dryer Mill
Meteor Mill
Fan
Exhaust Gas
Baghouse
Exhaust Gas
Ash Recovery System
Outlet Stack

Department of Natural Resources
cc Stan Mermall-Oshkosh Area

OBSERVER CHECKLIST FOR STACK TESTS
Form 4500-32 Rev. 1-84

NOx, CO, O2 CEM Rel. Accur. Test

Date: June 24, 1992

Name of Company: P.H. Glatfelter

Telephone Number (Include Area Code):

Street or Route:

FID Number:

City, State, Zip Code:

Name of Contacts:

Title:

Name of Company Conducting Test: Same

Street or Route:

City, State, Zip Code:

Name of Test Crew Chief:

Telephone Number (Include Area Code):

Regulation: Permit requires NOx, CO, and O2 CEMs

Stack Number: S01

Process Number: I01

Description of Process: Extractive dilution probe for NOx, CO. Insitu O2. Data logger corrects all reading to dry basis using 20% moisture. It then corrects NOx and CO to 7% O2.

Permit Number: Same

Year Installed:

Capacity of Process:

Normal Capacity or Production Rate:

Certified By:

Operating Conditions of Process

	Run 1	Run 2	Run 3
Process Weight Rate (T/HR):	Same		
Production Rate:			

The CEM system consists of the following analyzers.

Pollutant	Manu.	Model #	Serial #	Principle of Operation
NOx	Thermo. Envir.	42	42-30634-238	Chem Lum. 0-600 PPM
CO	" "	48	48-30031-237	Gas Filter Correlation 0-300 PPM
O2	Kent	296M	A/17411/113	Zir. Oxide 0-25%
Data Aqui. System	AST	286	1164	

Description of Air Pollution Control Equipment

Same

	Run 1	Run 2	Run 3
Δ P Across Collector (IN H,O):			

Description of Test Method

NOX - Method 7E - Thermo Electron Model 10 - Chem. Lumin.
CO - Method 10 - Maihak Defor - NDIR
O_2 - Method 3A - Westinghouse Oxygor 6N - Paramagnetic
Using all Protocal 1 calibration gases.

Calibration Data

Pitot Cp: _____ Date: _____

DGM Y Factor: _____ Date: _____

Orifice Δ H@: _____ Date: _____

Sampling Data

Number of Sampling Points: _____ Number of Ports: _____ Stack Diameter: _____

Duct Dimensions: _____ Gas Sample Method: Integrated: _____ Grab: _____

Gas Sample Analysis Method: _____ Filter Media: _____

Orsat Leak Check: _____ Orsat O_2 Check: _____ Pitot, Nozzle Alignment Check: _____

Moisture Determination: Condensation _____ Wet-Dry Bulb: _____

Sketch sampling location (indicate distance upstream and downstream from flow disturbances and sketch cross sections of duct at sampling location. Comment about the testing, procedure, plant operations, etc.

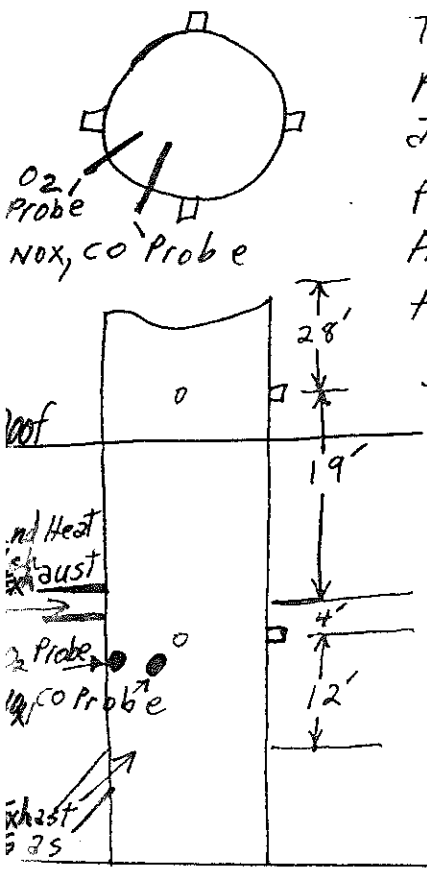

The stack testing was done at the ports on the roof. The relative accuracy testing was done at the ports near the NOx, CO, and O_2 probes. A moisture train was also run at this location. The Rel. Acc. test started about 1100. They were doing 21 min sampling periods and planned to do 10 or 11 depending on how the numbers were agreeing. The test was stopped when the incinerator went down from 1353 to 1438 and continued when the incinerator settled down.

Observer Joseph Perez

Department of Natural Resources
cc Stan Mermall-Osh Kosh Area

OBSERVER CHECKLIST FOR STACK TESTS
Form 4500-32 Rev. 1-84

Particulate & Opacity Testing

Date: June 25, 1992

Name of Company: P. H. Glatfelter

Telephone Number (Include Area Code):

Street or Route:

FID Number:

City, State, Zip Code:

Name of Contacts:

Title:

Name of Company Conducting Test: Same

Street or Route:

City, State, Zip Code:

Name of Test Crew Chief:

Telephone Number (Include Area Code):

Regulation: Part. = 3.0 Lb/Hr
OP = 20%

Stack Number: 501

Process Number: I01

Description of Process: Same

Permit Number: _____ Year Installed: _____

Capacity of Process: _____

Normal Capacity or Production Rate: _____ Certified By: _____

Operating Conditions of Process

	Run 1	Run 2	Run 3
Process Weight Rate (T/HR):	200 wet T/Day, 8.33 wet T/Hr @ 60% Moisture → 3.33 Dry T/Hr		
Production Rate:			
Comb. Temp.	1734°F	1739°F	1753°F
Comb O_2	7.3%	7.5%	7.4%
stack CO @ 7% O_2	47 PPM	57 PPM	59 PPM
stack NOX @ 7% O_2	268 PPM	221 PPM	212 PPM

Description of Air Pollution Control Equipment: Same

	Run 1	Run 2	Run 3
Baghouse Outlet Temp.	258°F	268°F	285°F
Δ P Across Collector (IN H_2O):	1.9"	1.5"	1.7"

Description of Test Method

Particulate - EPA Method 5 including backhalf
opacity - EPA Method 9 - 3 one-hour readings

Calibration Data

Pitot Cp: .84 Date:

DGM Y Factor: .988 Date: 5/21/92

Orifice Δ H@: 2.025 Date: 5/21/92

Sampling Data

Number of Sampling Points: 24 total, 12/Port Number of Ports: 2 Stack Diameter: 57"

Duct Dimensions: — Gas Sample Method: Integrated: ✓ Grab: —

Gas Sample Analysis Method: Orsat Filter Media: fiberglass

Orsat Leak Check: OK Orsat O_2 Check: OK Pitot, Nozzle Alignment Check: OK

Moisture Determination: Condensation: impingers Wet-Dry Bulb: —

Sketch sampling location (indicate distance upstream and downstream from flow disturbances) and sketch cross sections of duct at sampling location. Comment about the testing, procedure, plant operations, etc.

Run 1 - Filter has white power and lose gray particles.
Impinger fluid was clear.
The probe wash had a few specks.

Run 2 - Same as 1

Run 3 - not witnessed
Someone from Mostardi was taking opacity reading along with the stack test.

Observer Joseph Perez

Department of Natural Resources

OBSERVER CHECKLIST FOR STACK TESTS SUPPLEMENT SHEET

Form 4500-32A

1-84

Name of Company	Stack Number	Process Number
P.H. Glatfelter, Neenah	501	I01

	Run 1	Run 2	Run 3
Date of Test:	6/25/92	6/25/92	6/25/92
Weather			
Sky Conditions:	Overcast	Haze	Partly cloudy
Wind Speed (MPH):	15-20 MPH	15-20 MPH	20-25 MPH
Wind Direction:	From SW	From South	From South
Ambient Temperature (°F):	55	60	65
Leak Checks			
Train Before Test:	OK	OK	OK
Train After Test:	0@8"	0@6.5"	
Pitot Lines Before Test:	OK	OK	OK
Pitot Lines After Test:	OK	OK	
Stack Data			
Average Velocity Traverse Δ P(IN H_2O):	2.8	2.8	
Stack Static Pressure (± IN H_2O):	-1.0	-1.0	
Stack Temperature (°F):	300	305	
Percent Moisture:	7%	7%	
Percent Opacity:	0	0	
Test Data		Trouble with leak check before start of Run 3	
Start and Stop Time of Run:	0742-0856	1005-1120	
Total Number of Sampling Points:	24	24	24
Sampling Time Per Point (MIN):	3	3	3
Sampling Time Per Run (MIN):	72	72	72
Nozzle Diameter (IN):	0.200	0.200	0.200
Percent CO_2:	1.7	1.5	
Percent O_2:	18.3	18.5	
Percent CO:			
Sample Volume Per Run (DCF):	66	70	