EPA Region V

Department of Natural Resources

OBSERVER CHECKLIST FOR STACK TESTS

Form 4500-32 Rev. 1-84

	Date: 6-11-92
Name of Company: Red Arrow Products	Telephone Number (Include Area Code): (414) 683-5500
Street or Route: 1226 S. Water St.	FID Number: 436 036 700
City, State, Zip Code: Manitowoc, WI 54220	55 071 00053
Name of Contacts: Dale Hanke	Title: VP-Operations

Name of Company Conducting Test: ETE

Street or Route: 13020 W. Bluemound

City, State, Zip Code: Elm Grove

Name of Test Crew Chief: Lowell Huenink	Telephone Number (Include Area Code): (414) 784-2434
Regulation: TSP = .2 #/10³ #; CO = .3 #/Hr; HCOH = 280 #/yr; Benzene = 300 #/yr	Stack Number: 501
	Process Number: P01

Description of Process: Sawdust Dryer

Permit Number: 85-IRS-046 Year Installed:

Capacity of Process: 60 rpm

Normal Capacity or Production Rate: 50-55 rpm Certified By:

Operating Conditions of Process

	Run 1	Run 2	Run 3
Process Weight Rate (T/HR): Sawdust Dryer Feed rate (rpm)	55	55	55
Production Rate: Inlet VOC	3 ppm	2	2
Inlet CO	100 (85) ppm	75	75
Outlet VOC	50 (32) ppm	15	14 (42)
Outlet CO	185 (70) ppm	60	90

Description of Air Pollution Control Equipment: Multiclones

	Run 1	Run 2	Run 3
Δ P Across Collector (IN H_2O):			

ANUM 010 7-9-92

Description of Test Method

Benzene = Method 18
CO = " 10
VOC = " 25A (J.U.M. analyzers)
HCOH = " 0011
TSP = " 5 (outlet only)

Calibration Data

Pitot Cp: 0.85 Date: 6-2-92

DGM Y Factor: 1.021 Date:

Orifice Δ H@: 1.685 Date:

Sampling Data

Number of Sampling Points: Number of Ports: Stack Diameter:

Duct Dimensions: Gas Sample Method: Integrated: ✓ Grab:

Gas Sample Analysis Method: Orsat Filter Media:

Orsat Leak Check: Orsat O_2 Check: Pitot, Nozzle Alignment Check:

Moisture Determination: Condensation: Wet-Dry Bulb:

Sketch sampling location (indicate distance upstream and downstream from flow disturbances and sketch cross sections of duct at sampling location. Comment about the testing, procedure, plant operations, etc.

- changed damper at beginning of Run 1; the result lowered the VOC and CO concentration (in parenthesis)

VOC:

1) took sample every 2 mins. because smoke could ruin FID.
2) started at range of 0-1000 but changed to 0-100 because concentration very low.
3) used bag sample from inlet & analyzed for VOC + CO on site.

Run 3

Different load of sawdust increased concentrations
- from 14 ppm VOC to 42 ppm VOC
- CO also rose slightly

* Cal. gas 803 ppm
* stack cap & prevailing winds created downwash directly around stack testers.

	Run 1	Dryer Run 2	Run 3	
A	2000° F	2000°	2000°	→ Burner temp.
B	867° F	840°	840°	→ Inlet to burner
C	370° F	370°	370°	→ Inlet to drum
D	180° F	180°	180°	→ Outside charcoal rate (temp. controlled)
E	55 rpm	55	55	→ Sawdust feed rate

Observer [illegible]

Department of Natural Resources

OBSERVER CHECKLIST FOR STACK TESTS SUPPLEMENT SHEET

Form 4500-32A

1-84

Name of Company	Stack Number	Process Number
Red Arrow	501	P01

	Run 1	Run 2	Run 3
Date of Test:			
Weather			
Sky Conditions:	clear →		
Wind Speed (MPH):	15-25 →		
Wind Direction:	from S →		
Ambient Temperature (°F):	70° →		
Leak Checks			
Train Before Test:	ok	ok	ok
Train After Test:	ok	ok	ok
Pitot Lines Before Test:	ok	ok	ok
Pitot Lines After Test:	ok	ok	ok
Stack Data			
Average Velocity Traverse ΔP(IN H_2O):	.04-.3	.04-.34	.04-.34
Stack Static Pressure (± IN H_2O):	-.05-.1	+.08	+.08
Stack Temperature (°F):	190	190	190
Percent Moisture:	12%	12	12
Percent Opacity:	15	20	20
Test Data			
Start and Stop Time of Run:	915-1015	1040-1145	1207-107
Total Number of Sampling Points:	24 →		
Sampling Time Per Point (MIN):	2.5 →		
Sampling Time Per Run (MIN):	60 →		
Nozzle Diameter (IN):	3/8 →		
Percent CO_2:	2.3	2.4	3.0
Percent O_2:			
Percent CO:			
Sample Volume Per Run (DCF):	48.00	47.90	47.89

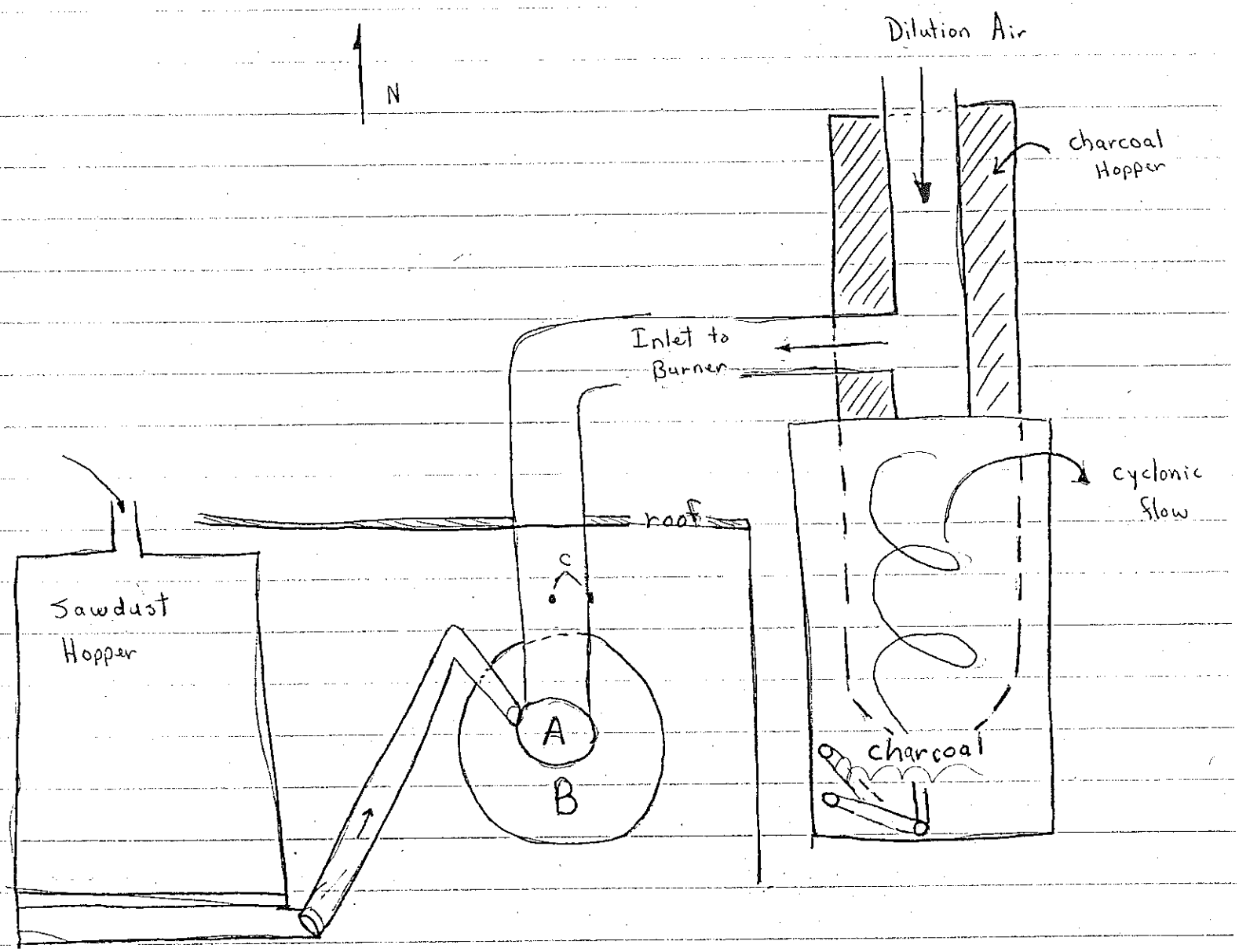

A = Burner

B = Drum

C = Inlet test ports

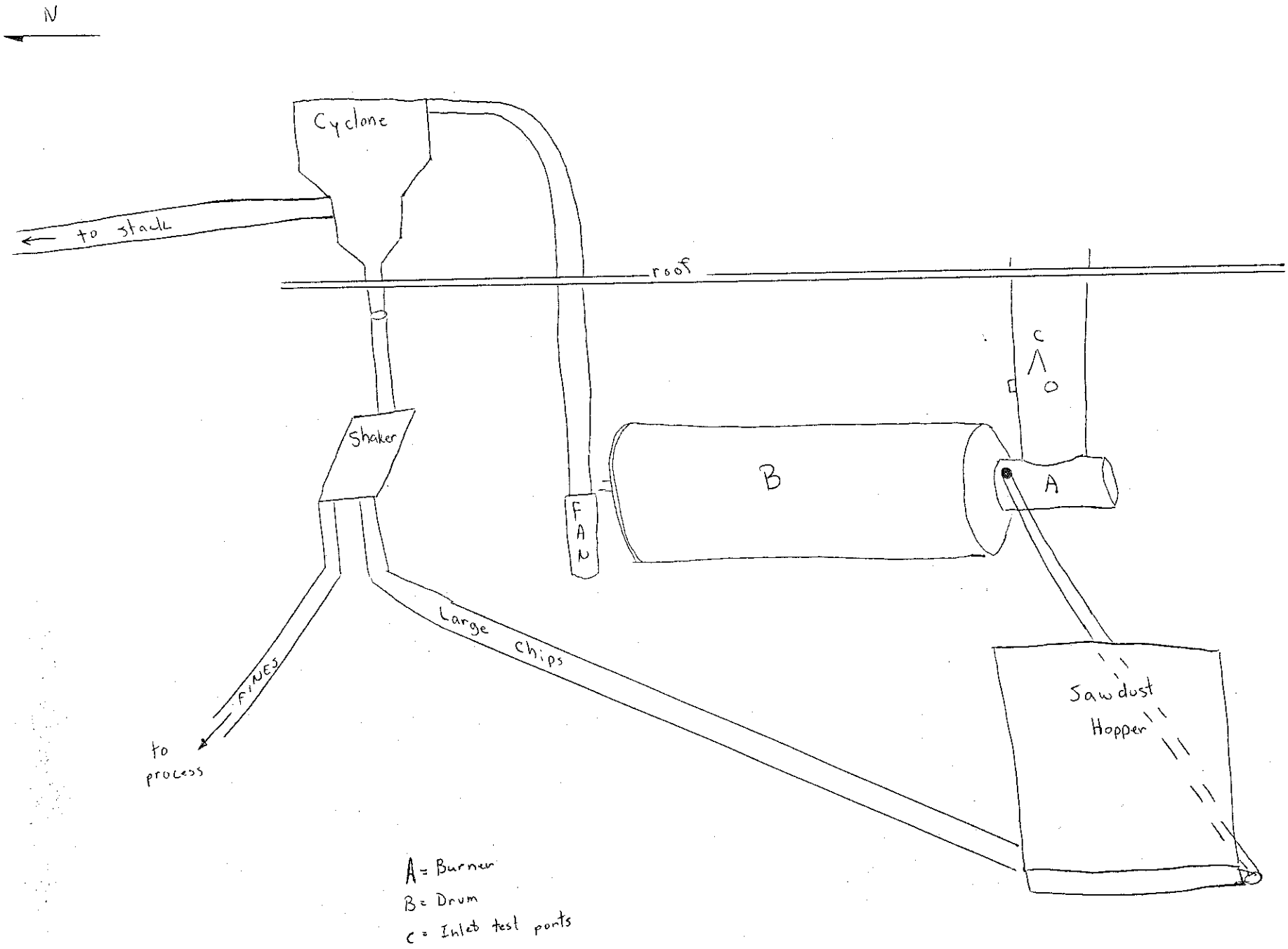
N
Cyclone
to stack
roof
C
Shaker
B
A
FAN
Large Chips
FINES
to process
Sawdust Hopper
A = Burner
B = Drum
C = Inlet test ports

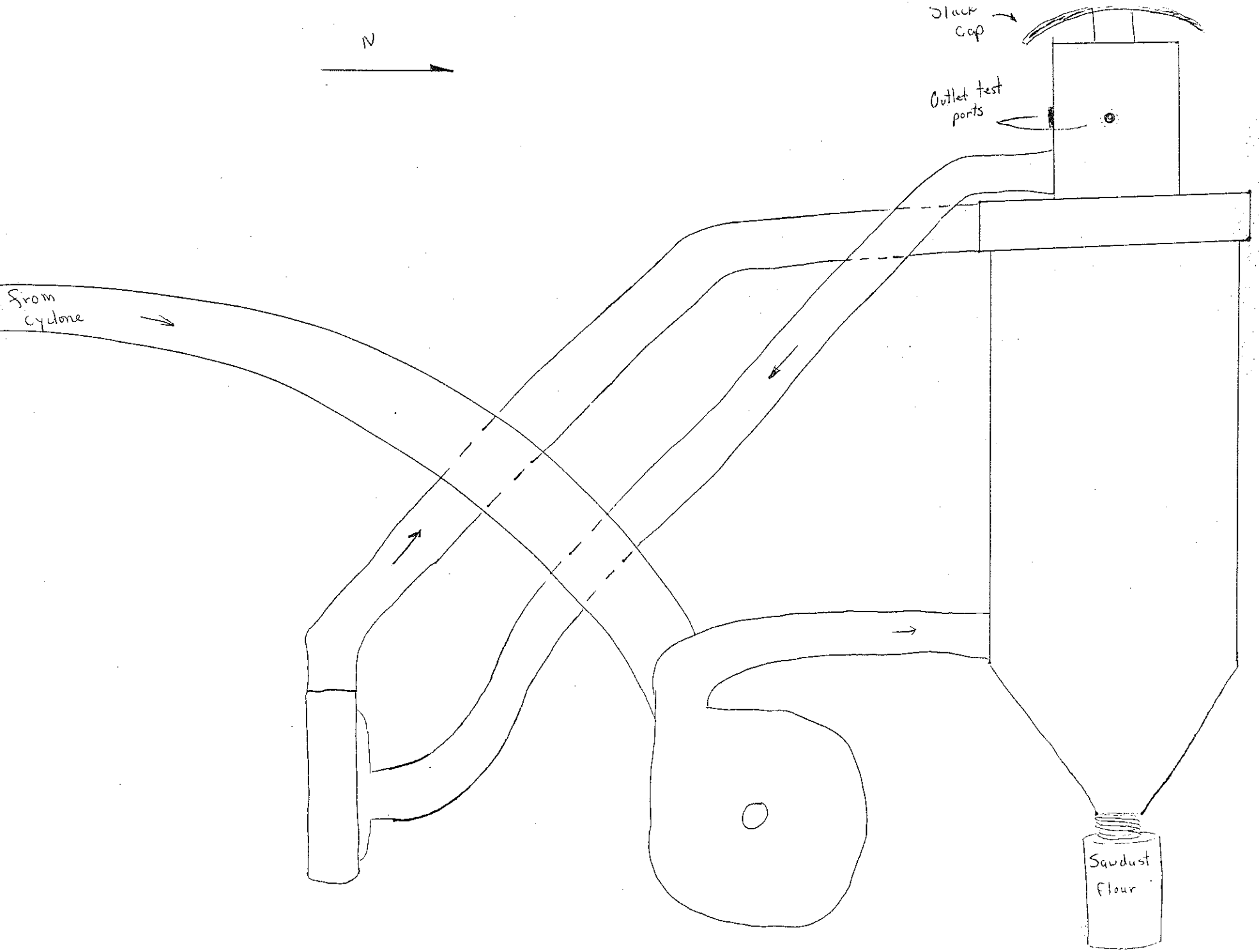
N
Stack cap
Outlet test ports
from cyclone
Sawdust flour