ENVIROSAFE
ENVIROSAFE SERVICES OF OHIO, INC.

876 Otter Creek Road
Oregon, Ohio 43616-3518
Phone: (419) 698-3500 or (800) 537-0426
Fax: (419) 698-8663
Website: www.envirosafeservices.com

October 8, 2012

Mr. Scott J. Nally, Director
Ohio Environmental Protection Agency
c/o Mr. Ed Lim, DERR
50 W. Town Street, Suite 700
Columbus, OH 43215

RE: Envirosafe Services of Ohio, Inc.
Ohio EPA ID No. 03-48-0092
USEPA ID No. OHD 045 243 706
Modification No. 075 - Class 1A Permit Modification Request to:
Update the OMPM Plan for Leachate Extraction at SWMUs 5, 6, and 7

Dear Mr. Nally:

In accordance with OAC 3745-50-51(D)(1)(b), Envirosafe Services of Ohio, Inc. (ESOI) hereby resubmits a Class 1 permit modification notification requiring prior approval by the Director to the Ohio Environmental Protection Agency (Ohio EPA) for the Hazardous Waste Facility Installation and Operation Permit issued to its Oregon, Ohio waste management facility. ESOI evaluated data generated from the 2010 leachate extraction system expansion along with insights from historical aerial photographs. Based on this information, ESOI implemented enhancements to the leachate extraction system in 2011. The conclusions and enhancements included changes to the leachate extraction systems and recognition that some wells were installed in areas of less permeability, such as clay walls and former roadways under the surface of the landfill. Updates to the Operations Maintenance and Performance Monitoring Plan (OMPM Plan) have been made accordingly. Enclosed, please find a redline/strikeout version of the revised OMPM Plan. A clean copy will be submitted following Ohio EPA review. The final revised OMPM plan will replace the existing plan.

In accordance with OAC 3745-50-51(D)(1)(a)(ii), a notice of this modification will be sent to all persons on the facility mailing list and the appropriate units of State and local government (following approval by Ohio EPA). A copy of the proposed notification has been included with this letter.

Certification for this submittal:

> I certify under penalty of law that this document and all attachments were prepared under my direction or supervision in accordance with a system designed to assure that qualified personnel properly gather and evaluate the information submitted. Based on my inquiry of the person or

persons who manage the system, or those persons directly responsible for gathering the information, the information submitted is, to the best of my knowledge and belief, true, accurate, and complete. I am aware that there are significant penalties for submitting false information, including the possibility of fine and imprisonment for knowing violations.

If you have any questions, please contact Kenneth Humphrey at (419) 698-3500, extension 246.

Sincerely,

Douglas E. Roberts,
President

Enclosures

Courtesy Copy:

Lynn Ackerson	Ohio EPA, DERR, NWDO (2 copies w/ enclosures)
Michael Terpinski	Ohio EPA, DERR, NWDO (via e-mail)
John Pasquarette	Ohio EPA, DMWM, NWDO (via e-mail)
Peter Ramanauskas	USEPA, Region 5 (via e-mail)
Stephen DeLussa	Envirosource Technologies (w/ enclosures)
Ken Humphrey	ESOI (w/ enclosures)

ENVIROSAFE SERVICES OF OHIO, INC.

PROPOSED PUBLIC NOTICE

October 8, 2012

Notice is hereby given that the Ohio Environmental Protection Agency has approved a Class 1A permit modification notification request submitted to the Agency by Envirosafe Services of Ohio, Inc. (ESOI) for a modification to its existing Permit for its facility located at 876 Otter Creek Road, Oregon, Ohio, (USEPA ID No. OHD 045 243 706, Ohio EPA ID No. 03-48-0092). The purpose of the modification is to update the Operations Maintenance and Performance Monitoring Plan (OMPM Plan) for the Leachate Extraction Systems on SWMUs 5, 6, and 7 to incorporate enhancements that have been made to the systems and recognize wells that have been installed in areas of less permeability such as clay walls and former roadways under the surface of the landfill. A copy of the permit modification request is available for review in the offices of the Ohio EPA, Northwest District Office at 347 North Dunbridge Road in Bowling Green, Ohio. Please contact the Envirosafe facility at 419-698-3500 to review the application request or if you need additional information concerning this Permit modification. You may also contact the Ohio EPA, Northwest District Office at 419-352-8461.

ENVIROSAFE SERVICES OF OHIO, INC.

OPERATIONS, MAINTENANCE,
&
PERFORMANCE MONITORING PLAN

for the

Presumptive Corrective Measures
(Leachate Collection Systems)
at
Solid Waste Management Units 5, 6, and 7

Prepared For:

Envirosafe Services of Ohio, Inc.
876 Otter Creek Road
Oregon, Ohio 43616

USEPA Identification No. OHD 045 243 706
Ohio EPA Identification No. 03-48-0092

August 15, 2007
Revised October 8, 2007
Revised December 30, 2008 by ESOI
Revised June 28, 2010
Revised April 29, 2011
Revised October 8, 2012

The Mannik & Smith Group, Inc.
1800 Indian Wood Circle
Maumee, Ohio 43537

TABLE OF CONTENTS

SECTION: PAGE NO.:

1.0 INTRODUCTION 1

2.0 BASIS OF DESIGN 43

3.0 SPECIFICATIONS 76

3.1 LEACHATE RECOVERY WELLS 76
3.2 INTERIOR PIEZOMETERS 76
3.3 CONTAINMENT AREAS 87
3.4 STORAGE TANK LOAD-OUT PUMPS 88
3.5 CONTAINMENT AREA SUMP PUMPS 88
3.6 LEACHATE STORAGE TANKS, TANK RESTRAINT SYSTEMS, AND TANK LEVEL CONTROLS 88
3.7 LEACHATE RECOVERY PUMPS AND WELL LEVEL CONTROLS 88

4.0 OPERATION AND ROUTINE MAINTENANCE 109

4.1 RECOVERY WELL MAINTENANCE 109
4.2 INTERIOR PIEZOMETER MAINTENANCE 109
4.3 CONTAINMENT AREA OPERATION AND MAINTENANCE 109
4.4 STORAGE TANK LOAD-OUT PUMPS (GORMAN-RUPP MODEL S3B18) 109
4.5 CONTAINMENT AREA SUMP PUMP OPERATION 1110
4.6 LEACHATE STORAGE TANKS OPERATION AND MAINTENANCE 1110
4.7 STORAGE TANK LEVEL CONTROL SYSTEMS OPERATION AND MAINTENANCE 1211
4.8 LEACHATE RECOVERY PUMPS 1211
4.9 PIPING HEAT TRACE SYSTEM MAINTENANCE 1312
4.10 REPORTING 1312

5.0 SITE CONTACT LIST 1413

5.1 EMERGENCY RESPONSE & NOTIFICATION 1413
5.2 NON-EMERGENCY QUESTIONS OR ABNORMAL CONDITIONS 1413
5.3 SPILLAGE 1413

6.0 PERFORMANCE MONITORING PROGRAM 1514

6.1 OVERVIEW 1514
6.2 CONCEPTUAL MODEL 1514
6.3 PERFORMANCE MONITORING OBJECTIVES 1716
6.3.1 Minimizing Potential Impacts to Groundwater 1716
6.3.2 Establishing an Inward Gradient at Each of the SWMUs 1817
6.3.3 Reducing Head Levels by Removing Leachate to the Lowest Level which is Practicably Achievable 1817
6.3.3.1 SWMU 5 - Central Area 1918
6.3.3.2 SWMU 5 - West Area 2018
6.3.3.3 SWMU 6 2018
6.3.3.4 SWMU 7 2019
6.4 MAINTENANCE OF LEACHATE LEVELS BELOW THE TARGET LEACHATE LEVEL 2119
6.5 REMEDY EVALUATION AND SUPPLEMENTAL CORRECTIVE ACTION 2220
6.6 GROUNDWATER QUALITY DATA 2321
6.7 REPORTING 2321

TABLE OF CONTENTS (CONTINUED)

TABLES

TABLE 1 FLUID LEVEL MONITORING LOCATIONS SWMUS 5, 6, & 7
TABLE 2 SWMUS 5, 6, AND 7 TARGET LEACHATE LEVELS

FIGURES

FIGURE 1 NO LONGER USED
FIGURE 2 NO LONGER USED
FIGURE 3 NO LONGER USED
FIGURE 4 PERFORMANCE MONITORING FLOW CHART

ATTACHMENTS

ATTACHMENT 1 WELL AND PIEZOMETER LOGS
ATTACHMENT 2 AS-BUILT DRAWINGS
ATTACHMENT 3 STORAGE TANK LOAD-OUT PUMP SPECIFICATIONS
ATTACHMENT 4 CONTAINMENT AREA SUMP PUMP SPECIFICATIONS
ATTACHMENT 5 STORAGE TANK, RESTRAINT SYSTEM, AND LEVEL CONTROLS SPECIFICATIONS
ATTACHMENT 6 LEACHATE RECOVERY PUMP AND WELL LEVEL CONTROLS SPECIFICATIONS
ATTACHMENT 7 HEMCO GANGWAY, HOSE ARM, AND PLATFORM INSTRUCTIONS AND DRAWINGS
ATTACHMENT 8 STORAGE TANK LOAD-OUT PUMP MANUALS
ATTACHMENT 9 POLYPROCESSING INSTALLATION MANUAL
ATTACHMENT 10 TANK HEATING SYSTEM INSTALLATION, OPERATION AND MAINTENANCE MANUAL
ATTACHMENT 11 STORAGE TANK LEVEL CONTROL SYSTEMS MANUALS
ATTACHMENT 12 LEACHATE RECOVERY PUMP SYSTEM MANUALS

1.0 INTRODUCTION

Envirosafe Services of Ohio, Inc. (ESOI) owns and operates a RCRA-permitted treatment, storage, and disposal facility (TSDF) at 876 Otter Creek Road in Oregon, Ohio (the facility). As specified in Module E of ESOI's Hazardous Waste Facility Installation and Operation Permit (RCRA Permit) for the Otter Creek Road TSDF, in accordance with Sections 3004(u) and 3004(v) of the Resource Conservation and Recovery Act (RCRA) of 1984, and regulations promulgated pursuant thereto, ESOI is conducting a Corrective Action Program (CAP) to assess and mitigate releases of hazardous wastes or hazardous constituents that pose unacceptable risks, if any, for the purpose of protecting human health and the environment.

On January 27, 2005, Ohio EPA provided comments to ESOI regarding the ongoing RCRA Facility Investigation (RFI) at ESOI's Otter Creek Road Facility. Included with these comments, Ohio EPA requested that ESOI consider implementing Presumptive Corrective Measures (PCM) based on data collected as part of the completed phases of the RFI. As agreed upon with Ohio EPA on June 1, 2005, ESOI prepared and implemented the following Ohio EPA approved work plans to gather data for use in designing and installing leachate recovery systems for SWMUs 5, 6, and 7:

- ESOI's Presumptive Corrective Measures Design (PCMD) Work Plan dated July 29, 2005 for corrective measure investigation for leachate recovery at Solid Waste Management Unit (SWMU) 6, and
- ESOI's Revised PCMD Work Plan Addendum dated February 15, 2006 for corrective measure investigations for leachate recovery at SWMUs 5 and 7.

ESOI submitted a report documenting the investigations at SWMUs 5, 6 and 7 entitled "Pump Test Report and 30% Presumptive Corrective Measures Design" dated August 4, 2006. For the investigation, one leachate recovery well was installed in each SWMU and tested. The conclusions recommended a recovery well system of 2, 5, and 3 recovery wells in SWMUs 5, 6, and 7, respectively. The report was approved by Ohio EPA by letter dated November 13, 2006.

The 90% Presumptive Corrective Measures Design for equipment and layout was completed in December 2006. ESOI submitted a permit modification for implementation of the corrective measures to Ohio EPA on January 12, 2007. On January 23, 2007, ESOI issued a purchase order to The Mannik and Smith Group, Inc., for construction services for finalization and implementation of the design, and a project kick-off meeting was held January 29, 2007. Construction of leachate collection systems at SWMUs 5, 6, and 7 was completed in 2007 and the leachate collection systems became fully functional on July 1, 2007.

In March 2009, valves were installed on Recovery wells to allow yield testing using bucket and stop watches.

A 2-Year Evaluation Report for the Presumptive Corrective Measures (Leachate Collection Systems) at Solid Waste Management Units 5, 6, and 7 was submitted to the Ohio EPA in September 2009. After considerable review and discussion between Ohio EPA and ESOI, the report was revised and resubmitted to the Ohio EPA in April 2010.

ESOI conducted a storm water runoff evaluation of SWMUs 5, 6, and 7 and submitted a report to the Ohio EPA in July 2010. ESOI is seeking approval for implementation of drainage system improvements to reduce the potential for infiltration of surface drainage to SWMUs 5, 6, and 7.

ESOI conducted an evaluation of explosive gas monitoring results for SWMUs 5 and 6 and submitted a report to Ohio EPA in August 2010.

ESOI undertook expansion of the leachate extraction system in 2010 to implement various recommendations made in the 2-Year Evaluation Report and in the explosive gas monitoring evaluation report. The work was completed by

December 2010. In SWMU 5, PZ-8 was converted to a recovery well (RW-11) with a centrifugal pump, and three additional piezometers were installed. In SWMU 6, one additional piezometer was installed, dewatering standpipes were removed from the north swale, and a passive gas vent was installed near the toe of the north slope. In SWMU 7, PZ-12 was converted to a recovery well (RW-12) with a centrifugal pump, and three additional piezometers were installed. The new piezometers were sized to allow future conversion to use as recovery wells.

Data generated from the 2010 system expansions and insights gathered from historical aerial photographs led to the following observations and conclusions which provided a basis for designing further stepwise enhancements to the leachate extraction systems:

1. Leachate levels in the southeastern portion of SWMU 5, in the northern and southern portions of SWMU 6, and in the eastern and western portions of SWMU 7 continued to be elevated.
2. Significant enhancements to the leachate extraction systems were needed to achieve the Target Leachate Levels by the target dates, especially for SWMU 6.
3. Aerial photographs from 1969, 1972, 1978, and 1980 provide clues to locations of areas of deeper fill and locations of dividing walls between waste disposal trenches.
4. Installation of a dual purpose leachate extraction well/piezometer within the 1980 active fill area southeast of PZ-5 would facilitate dewatering of the area of highest leachate level in SWMU 5 and provide improved understanding of the leachate conditions in that area.
5. Existing recovery wells RW-6 and RW-7 and piezometers PZ-4 and PZ-14 appear to have been installed in an area of relatively shallow basal clay on or near a 1978 dividing wall between waste disposal cells. Leachate levels in these wells and piezometers are believed to be reflective of localized perched leachate conditions or leachate levels in the 1978 cell north of the dividing wall.
6. Installation of dual purpose leachate extraction wells/piezometers north and south of the 1978 dividing wall would facilitate dewatering of the northern portion of SWMU 6 and provide improved understanding of the leachate conditions in that area.
7. Existing recovery well RW-5 in the southwest area of SWMU 6 appears to have been installed in an area of relatively shallow basal clay on or near a 1972 haul road. This limits the effectiveness of RW-5 for dewatering deeper areas to the north and east of RW-5.
8. The new 4-inch piezometer PZ-16 is located near the northwestern corner of the 1972 active fill area on the southern portion of SWMU 6. Conversion of PZ-16 to use as a dual-purpose extraction well/piezometer would accelerate dewatering of the southern portion of SWMU 6.
9. The pumps in RW-2 and RW-12 appear to have effectively dewatered the central area of SWMU 7 as reflected by the low leachate level in PZ-11.
10. There is currently no well in the southern portion of the 1972 active fill area. Installation of a dual purpose leachate extraction well/piezometer near the SWMU 7 north toe of slope would provide understanding of the leachate conditions in this area and allow dewatering of this area. The well must be located south of the service road to avoid the Toledo Edison power line easement that parallels the service road.
11. The rock-lined ditch at the northwest corner of SWMU 7 appears to be a recharge area and is slated for improvement under ESOI's Corrective Measures Study recommendations. Meanwhile, installation of a dual purpose leachate extraction well/piezometer (Well F) in the vicinity of PZ-9 would facilitate dewatering of this area of highest leachate level in SWMU 7 and provide improved understanding of the leachate conditions in this area.
12. Conversion of the new 4-inch piezometers PZ-18, PZ-19, and PZ-20 to use as dual-purpose extraction wells/piezometers would accelerate dewatering of the eastern and western portions of SWMU 7.
13. RW-4 in SWMU 5 – West was found to have shifted so that the existing Blackhawk pump could no longer be extracted for maintenance.

Based on this information ESOI undertook the following enhancements of the leachate extraction system in 2011:

- Installation of 8 new nested recovery well and piezometers (NRPs) into SWMUs 5, 6 and 7 (NRP-24 (located southwest of PZ-5) and NRP-31 (to replace RW-4) into SWMU 5; NRP-25 and NRP-26 (located

north of the 1978 dividing wall) and NRP-27 and NRP-28 (located south of the 1978 dividing wall) into SWMU 6; and NRP-29 (located in the southern portion of the 1972 active fill area) and NRP-30 (located between PZ-9 and the rock-lined ditch at the northwest corner of SWMU 7) into SWMU 7),

- Abandonment of a PVC standpipe at the northwest corner of SWMU 7,
- Conversion of 4 existing piezometers (PZ-16 in SWMU 6 and PZ-18, PZ-19, and PZ-20 in SWMU 7) to dual purpose recovery well/piezometers (DPW-16, DPW -18, DPW -19, and DPW -20),
- Redevelopment of 2 existing piezometers (PZ-9 and PZ-10 in SWMU 7), and
- Installation of piezometer liners in the following piezometers to reduce interference of non-aqueous phase liquid with level measurements: PZ-10, PZ-22, PZ-23, and NRP-27.

ESOI also installed passive gas vents PV-9 and PV-10 on the west slope of SWMU 5.

ESOI evaluated the performance of the enhanced leachate extraction systems in the spring of 2012 and reached the following conclusions:

- The systems were making significant progress toward achievement of the Target Leachate Levels.
- Many of the historical leachate level measurements are unreliable due to interference of cascading leachate, dirty well casing sidewalls, and cables, pumps, and hoses with readings taken with a large diameter interface probe which had unprotected sensors on the tip of the probe. Use of a water level meter with a narrow diameter protected probe will facilitate more accurate liquid level measurements in the presence of such interferences.
- SWMU 6 will not achieve the Target Leachate Level by the SWMU 6 July 1, 2012, target date. An extension of the target date to July 1, 2013, will allow ESOI to complete expedited corrective measures related to storm water management, test different level probes, evaluate the accuracy of the historical leachate level data, and further evaluate the effectiveness of the corrective actions.
- SWMUs 5 and 7 are expected to achieve their Target Leachate Levels by their target dates, July 1, 2016, and July 1, 2014, respectively.
- The following liquid level measurement points should be added to the lists of deep interior piezometers used for calculating average leachate levels in their respective SWMUs:
    - SWMU 5 – Central Area: RW-3, RW-8, and NRP-24.
    - SWMU 5 – West Area: NRP-31.
    - SWMU 6: RW-1, NRP-25, NRP-26, NRP-27 and NRP-28.
    - SWMU 7: RW-2, NRP-29 and NRP-30.
- Deep interior piezometers converted to dual purpose wells should continue to be used for calculating average leachate levels in their respective SWMUs.
- PZ-1 and PZ-2 should be excluded from Target Leachate Level calculations because these wells are located in a formation (e.g., access ramp, roadway, or trench sidewall) that is not strongly affected by pumping of adjacent wells and are not representative of the leachate level across SWMU 6.
- PZ-9 should be excluded from Target Leachate Level calculations because this well is located in a formation (e.g., access ramp, roadway, or trench sidewall) that is not strongly affected by pumping of adjacent wells and is not representative of the leachate level across SWMU 7.
- The definition of "dewatered" in the vicinities of shallow interior piezometers as used in Sections 6.3.3.1, .2, .3, and .4 should be modified in recognition that leachate levels in such wells and piezometers are reflective of localized perched leachate conditions due to being located in clay walls or roadways, are not readily responsive to pumping in the deep recovery wells, and are not representative of leachate levels across the SWMUs.

This Operations, Maintenance, and Performance Monitoring Plan provides a summary of the basis of the leachate recovery system design, equipment specifications, operation and routine maintenance procedures, non-routine maintenance procedures, site contact list, and a detailed performance monitoring program. This plan also includes well and boring logs, as-built drawings, and manufacturer manuals for key equipment.

2.0 BASIS OF DESIGN

The basis of the PCM design is summarized as follows:

- It was estimated that leachate recovery wells installed in SWMUs 5, 6, and 7 would produce an average rate of 0.5 gpm with head differentials of 43.3, 45.3, and 32.9 feet, respectively.
- The leachate recovery wells installed in SWMUs 5, 6, and 7 were estimated to have radii of influence after 10 years of 531 feet, 202 feet, and 242 feet, respectively.
- The leachate recovery wells were strategically located so that the footprint of each SWMU is contained within the respective estimated radii of influence.
- The numbers of leachate recovery wells determined to be necessary based on the estimated radii of influence for SWMUs 5, 6, and 7 were 1, 5, and 3, respectively, for a total of ten wells.
- An additional leachate recovery well was installed in the western portion of SWMU 5 because of concern that the cell floor contour may inhibit leachate flow toward the central recovery well (RW-3).
- The three test wells that were installed at the centers of SWMUs 5, 6, and 7 during the PCM 30 percent design phase were retained for use as leachate recovery wells and were designated RW-3, RW-1, and RW-2, respectively.
- Sonic drilling was selected as the preferred method of installing the seven additional leachate recovery wells because of its ability to penetrate dense objects, because of its ability to install boreholes with minimal smear and less development time, and because of safety considerations.
- To obtain the best configuration of well and filter pack, a borehole diameter of 10 inches and a 4-inch diameter well were specified. This allowed for a nearly 3-inch annulus for the filter pack, ensuring a continuous filter layer which should facilitate re-development that may be required through time. 10 inches was the maximum borehole diameter available in the Ohio area for sonic drilling at the necessary depths.
- The percentage of open area in well screens should be the same as, or greater than, the average porosity of the saturated waste material. Screened wells perform best when the intake area of the screen is as great as possible for a particular slot opening and strength requirement. The typical range of porosity of municipal waste is 30-50%. To equal the maximum porosity, the minimum slot size required for a 4-inch well is 0.060 inch. To obtain an open area greater than the porosity, a slot size of 0.100 inch was specified.
- Screens with large open areas and low entrance velocities are less subject to incrustation and corrosion. The screen size was selected to ensure that the entrance velocity of the fluid into the well screen is less than 0.1 ft^3/sec. The entrance velocity of the 1.35 gpm maximum rated pump capacity through one foot of the selected well screen was calculated to be 0.00448 ft/sec, well below the 0.1 ft^3/sec criterion.
- The screen length for the recovery wells installed in 2007 was selected to be approximately one-third of the SWMU waste thickness. In SWMU 5, the waste was expected to be approximately 20 to 25 feet thick. In SWMUs 6 and 7, the saturated thickness of waste was expected to be 45 to 50 feet. A screen length of 20 feet was installed for RW-4, RW-5, RW-6, RW-7, RW-8, RW-9, and RW-10.
- It is desirable to select recovery well filter pack that would retain at least 80% of the landfill material into which it is placed. If the landfill material is too fine, it could over time clog the gravel pack and/or silt in the recovery well. Due to the heterogeneous nature of the wastes and cover soils in SWMUs 5, 6, and 7, it was not possible to determine site specific particle sizes of the materials. However, a leachate extraction well at another landfill that received mixed industrial, commercial, and domestic prior to 1980 is known to have performed satisfactorily with a gravel filter pack consisting of ODOT #57 stone which has 90 to 95 percent of its particles in the 0.25 inch to 1.0 inch size range. Therefore it was determined to select a filter pack with a size range no greater than ODOT #57 aggregate. Global #3, a quartz-based rounded rock with about 92 percent of the material in the ⅛" to ¼" size range, was specified for the recovery well filter pack. This should adequately retain the landfill materials. Also, about 98% of this filter pack material should be retained by the well screen after development. This should give good porosity and hydraulic conductivity greater than that of the surrounding materials, thus ensuring that the filter pack is not a limiting factor in the well design.
- The wells were completed at the bottom of the waste to allow maximum dewatering and to maximize the hydraulic head for flow to the wells.

- Blackhawk Model 101E piston pumps were specified as the leachate recovery pumps because they can function with sediment and viscous products in the pumped fluid and their reciprocating action should serve to promote ongoing development of the wells in the waste outside the filter packs.
- The intake screens of the leachate recovery pumps were installed at the bottom of the wells. The pumps are designed to be able to draw down the leachate level to within eight inches of the bottom of the intake screens before drawing air.
- Level controls were specified for the leachate recovery pumps to turn the pumps on at about two to three feet above the well bottom and off at about 1 foot above the cell bottom. Use of the level controls was abandoned in favor of running the pumps continuously as recommended by the manufacturer.
- One inch diameter SDR 11 high density polyethylene piping (HDPE) was specified for the leachate conveyance force main. This piping is strong, flexible, and elastic and stands up well to the stresses typical of landfill leachate applications. The one inch diameter size is capable of conveying flow rates up to fifteen or twenty times the maximum flows anticipated in the PCM installation.
- The maximum anticipated leachate pumping rates for SWMUs 5, 6, and 7 during initial operation were 3888, 9720, and 5832 gallons per day, respectively. It was anticipated that within six to twelve months of operation the production would diminish to about one-third of the initial values.
- A 12,500 gallon leachate storage tank was specified for each SWMU. It was expected that this would be adequate volume so that within one year of start-up weekend load out of leachate would no longer be necessary.
- Level controls were provided for each storage tank to turn on a yellow signal light when the tank nears full condition and to turn on a red signal light and turn off the associated leachate recovery pumps when the tank is full.
- The storage tanks are protected from freezing by heat maintenance systems comprised of thermostatically controlled electric heating pads and 2 inches of polyurethane insulation. The heat maintenance kits are rated for Delta 60 degrees, meaning that they can maintain the temperature in the tanks at 60 degrees Fahrenheit above the ambient temperature to prevent freezing of tank contents at temperatures to minus 28 degrees Fahrenheit.
- Above ground piping at the recovery wells and storage tanks is protected from freezing by electric heat tape and insulation.
- The storage tanks and platforms for accessing the tanks and loading trucks were installed on concrete foundations constructed in containment areas sized to hold the volume of one tank plus the volume of a 25-year 24-hour storm.
- Leak detection trays fabricated from 40-mil high density polyethylene membrane (HDPE) were placed on the tank foundations prior to placement of the tanks. The trays were designed to concentration flow from a leaking tank to aid in identification of the leaking condition.
- The leachate storage tank for SWMU 5 was designated LST5-1 and was installed in a containment area with room for an additional storage tank (LST5-2) if that would ever be necessary.
- The leachate storage tanks for SWMUs 6 and 7 were designated LST6-1 and LST7-1 and were installed in a single containment area with room two additional storage tanks (LST6-2 and LST7-2) if that would ever be necessary.
- The containment areas were lined with 80-mil linear low density polyethylene (HDPE) membrane. The HDPE membrane was protected with a layer of 8-ounce non-woven geotextile, and the containment areas were backfilled with porous aggregate (ODOT #8 and #9) to provide both liquid containment volume and structural support for the concrete foundations, electrical conduits, and piping.
- Perforated 6-inch diameter corrugated HDPE pipe underdrains were installed underneath the aggregate backfill in each containment area to drain collected storm water or spillage to centrally located 24-inch diameter perforated HDPE sumps.
- Float-controlled 1½-inch ⅓-horsepower OTS Model 5790-95 submersible sump pumps (SP5 and SP6/7) were installed in each sump. The pumps discharge through fixed piping to LST5-1 or LST7-1. The pumps are rated at 30 gpm at 20 feet of head. Power to the sump pumps is provided through manually set timer

switches so that operators can ensure that there is adequate capacity in the storage tanks before the pumps are operated.

- 3-inch 6- horsepower Gorman-Rupp Model S3B18 submersible leachate pumps (LP5-1, LP6-1, and LP7-1) were installed in each leachate storage tank for load-out to tanker trucks. The pumps discharge through fixed piping to hose arms mounted on the loading platforms. The pumps are rated at 400 gpm at 30 feet of head and can load out 10,000 gallons in about 25 minutes. On/off control boxes for the pumps are conveniently located on the load-out platform so that operators can start and stop the pumps while observing the leachate level in the tank truck.
- The storage tank load-out pipes terminate in hose arms that can be adjusted to accommodate different tank truck configurations. The piping slopes back to the storage tanks to allow the system to drain during cold weather to avoid freeze-up. Because the pipes from LP6-1 and LP7-1 share the same hose arm, valves are provided in the piping to allow selection of the appropriate pump and isolation of the idle pump.
- In 2010 ESOI replaced the Blackhawk piston pumps in RW-1, RW-2, and RW-8 with Grundfos SQ centrifugal pumps and EPG LMSA 1200 stand-alone level monitoring systems. Also in 2010, ESOI converted PZ-8 in SWMU 5 and PZ-12 in SWMU 7 to recovery wells (RW-11 and RW-12) with Grundfos centrifugal pumps and EPG level monitoring systems.
- In 2010 ESOI installed three additional piezometers in SWMU 5, one additional piezometer in SWMU 6, and three additional piezometers in SWMU 7. The new piezometers were constructed similar to the 4-inch recovery wells that were installed in 2007 to allow future conversion to use as recovery wells. Instead of a separate gas vent, the new wells were constructed with screen lengths selected to extend near or above the existing leachate levels to allow landfill gas to vent freely to minimize gas pressure effects on leachate levels in the piezometers.
- In 2011 ESOI replaced the Blackhawk piston pumps in RW-5 and RW-9 with Grundfos centrifugal pumps and EPG level monitoring systems. ESOI was unable to remove or maintain the Blackhawk piston pumps from RW-4 and RW-10, so those pumps were abandoned in place.
- In 2011 ESOI converted 4 of the 2010-installed piezometers (PZ-16 in SWMU 6 and PZ-18, PZ-19, and PZ-20 in SWMU 7) to dual purpose recovery well/piezometers (DPW-16, DPW -18, DPW -19, and DPW -20) by installing Grundfos centrifugal pumps and EPG level monitoring systems.
- In 2011 ESOI installed 8 new nested recovery well and piezometers (NRPs) into SWMUs 5, 6 and 7 (NRP-24 (located southwest of PZ-5) and NRP-31 (to replace RW-4) into SWMU 5; NRP-25 and NRP-26 (located north of the 1978 dividing wall) and NRP-27 and NRP-28 (located south of the 1978 dividing wall) into SWMU 6; and NRP-29 (located in the southern portion of the 1972 active fill area) and NRP-30 (located between PZ-9 and the rock-lined ditch at the northwest corner of SWMU 7) into SWMU 7). ESOI installed Grundfos centrifugal pumps and EPG level monitoring systems in these wells. All of the wells were installed by a sonic drilling rig except that NRP-31 was installed by a hollow stem auger drilling rig.

3.0 SPECIFICATIONS

Specifications for the following major components of the PCM are summarized in the subsections below:

- leachate recovery wells
- interior piezometers
- containment areas
- storage tank load-out pumps
- containment area sump pumps
- leachate storage tanks, tank restraint systems, and tank level controls
- leachate recovery pumps and well level controls

3.1 Leachate Recovery Wells

Three different designs were used for the ten original leachate recovery wells. RW-1 was installed as an 8-inch diameter Schedule 80 PVC riser and prepacked screen with ½ to 1 inch river rock gravel pack in a 24-inch diameter borehole drilled with a bucket auger. RW-2 and RW-3 were installed as 6-inch diameter Schedule 80 PVC risers and prepacked screens with ½ to 1 inch river rock gravel pack in 8¼-inch diameter boreholes drilled with a hollow stem auger. RW-4, RW-5, RW-6, RW-7, RW-8, RW-9, and RW-10 were installed as 4-inch diameter SDR 11 HDPE risers with stainless steel screens with Global #3 equivalent filter pack (⅛ to ¼ inch silica sand) in 10-inch diameter boreholes drilled with a sonic drill rig. Venting of the 8-inch and 6-inch wells was accomplished through the side opening of a tee installed on each riser prior to installing the slip coupling for the well seal. Venting of the 4-inch wells was accomplished by installing 2-inch diameter SDR 11 HDPE casings in the boreholes to the top of waste with 10 or 20 feet of 2-inch HDPE continuous slot well screen below the top of waste.

Construction details for RW-11 and RW-12 (formerly piezometers PZ-8 in SWMU 5 and PZ-12 in SWMU 7) are provided in Section 3.2, below.

Construction details for dual purpose wells DPW-16, DPW -18, DPW -19, and DPW -20 (formerly piezometers PZ-16, PZ-18, PZ-19, and PZ-20) are provided in Section 3.2, below.

The nested recovery wells/piezometers installed in 2011 (NRP-24, NRP-25, NRP-26, NRP-27, NRP-28, NRP-29, NRP-30, and NRP-31) each consist of a 4-inch leachate recovery well and a 2-inch piezometer installed in a single 10-inch diameter borehole drilled with a sonic drill rig except that NRP-31 was installed in a 12-inch diameter borehole drilled with a hollow stem auger. Each 4-inch well has 10 feet of stainless steel screen attached to a schedule 80 PVC riser. with Global #3 equivalent filter pack (⅛ to ¼ inch silica sand). Each 2-inch piezometer has schedule 80 PVC screen extending from the base of waste to within 2 to 7 feet of the top of the waste with solid schedule 80 PVC above the screen. The purpose of the long screen is to vent landfill gas above the leachate level so that it does not affect the leachate level readings. The gas is exhausted to atmosphere through a tee and downturned elbow at the top of the piezometer riser. The filter pack for each well was Global #3 equivalent material (⅛ to ¼ inch silica sand).

Additional details on the well installations are provided on the relevant as-built drawings (Attachment 2) and in the well and boring logs (Attachment 1).

3.2 Interior Piezometers

Three different designs were used for the fifteen original interior piezometers. Piezometers PZ-1 through PZ-7 and PZ-9 through PZ 11 were installed as 2-inch diameter Schedule 80 PVC risers with #5 silica sand filter pack in 8¼-inch diameter boreholes drilled with a hollow stem auger. Piezometers PZ-8 and PZ-12

were installed as 4-inch diameter Schedule 80 PVC risers with #5 silica sand filter pack in 12½-inch diameter boreholes drilled with a hollow stem auger. Piezometers PZ-13 through PZ-15 were installed as 2-inch diameter Schedule 80 PVC risers with #5 silica sand filter pack in 6-inch diameter boreholes drilled with a sonic drill rig.

Seven additional piezometers were installed in 2010 as 4-inch diameter wells with stainless steel screens with Global #3 equivalent filter pack (⅛ to ¼ inch silica sand) in 10-inch diameter boreholes drilled with a sonic drill rig. RW-16, RW-18, RW-19, RW-20, RW-22, and RW-23 have SDR 11 HDPE risers. RW-21 has a Schedule 20 PVC riser. These piezometers were designed to allow conversion to use as leachate recovery wells.

Additional details on the piezometer installations are provided on the relevant as-built drawings (Attachment 2) and in the well and boring logs (Attachment 1).

3.3 Containment Areas

The containment areas for the leachate storage tank and truck loading areas were lined with 80-mil smooth HDPE membrane overlaid with protective fabric consisting of 8-ounce non-woven geotextile. The containment areas were backfilled with ODOT #8/9 aggregate to provide support for the tank and platform foundations, piping, conduits, and truck pads. Additional containment area details are provided on the relevant as-built drawings (Attachment 2).

3.4 Storage Tank Load-Out Pumps

Attachment 3 contains specification data sheets for the Gorman-Rupp submersible pumps (LP5-1, LP6-1, and LP7-1) that were installed in the leachate storage tanks for load-out to tanker trucks. MSG drew the load-out system curves for empty and full tank conditions on the manufacturer's to show the expected operating range of the pumps in this application. The curves indicate that the pumps should deliver approximately 375 to 420 gallons per minute to the load-out hose.

3.5 Containment Area Sump Pumps

Attachment 4 contains manufacturer's data sheets for the OTS Model 5790-95 submersible sump pumps (SP5 and SP6/7) that were installed in each sump.

3.6 Leachate Storage Tanks, Tank Restraint Systems, and Tank Level Controls

Attachment 5 contains the specifications for the leachate storage tanks, tank restraint systems, and tank level controls which were supplied by Aetna Plastics Corporation, Cleveland, Ohio. The tanks and restraint systems were manufactured by Poly Processing Company, Monroe, Louisiana, and the level controls were manufactured by FlowLine, Los Alamitos, California.

3.7 Leachate Recovery Pumps and Well Level Controls

Attachment 6 contains the specifications for the leachate recovery pumps and well level controls which were supplied by Blackhawk Technology Company, Glen Ellyn, Illinois. The pumps and control panels were manufactured by Blackhawk Technology Company, and the level control systems were manufactured by FlowLine, Los Alamitos, California.

With approval from Ohio EPA and as recommended by the manufacturer, ESOI abandoned use of level controls for the Blackhawk pumps in favor of continuous pumping of the Blackhawk pumps. Ohio EPA also

authorized ESOI to install and operate alternative leachate recovery pumps and level controls in accordance with the manufacturers' recommendations when appropriate to improve performance of the leachate recovery system.

Attachment 12 contains product information and instructions for Grundfos SQ pumps and EPG LMSA level monitoring systems and components which ESOI began to use in some wells in 2010. The specifications for these items are contained in the relevant as-built drawings (Attachment 2).

4.0 OPERATION AND ROUTINE MAINTENANCE

4.1 Recovery Well Maintenance

The leachate recovery wells are designed to provide a long service life. ~~The reciprocating action of the Blackhawk pumps is expected to provide ongoing development of the wells.~~ If data gathered under the performance monitoring program described in Section 7 indicates that the wells are not performing as intended, the need for supplemental development activities may be evaluated. If the pumps or level controls are not performing properly, appropriate adjustments, repairs, or replacements of system components should be made. The gas vents at the wells should be periodically inspected to ensure that they have not become blocked by insect or other animal activities.

4.2 Interior Piezometer Maintenance

If damage to interior piezometers is noted during liquid level measurement activities, appropriate repairs should be made.

4.3 Containment Area Operation and Maintenance

- No persons should access the tank and load-out platforms during thunderstorms due to the risk of lightning strike.

- Accumulation of significant volumes of water in a containment area sump during dry weather may be indicative of a leaking pipe, tank, or containment area membrane liner. The cause of the accumulation should be investigated. A sample of the water in the sump should be visually evaluated to see whether it is precipitation or leachate.

- The containment area electrical and grounding systems should be periodically inspected by a qualified electrician to ensure that all connections are tight and in place, components are in good condition, and all equipment is properly grounded.

- Operation and maintenance (including lubrication) of the Hemco gangway and Hemco hose arm should be conducted in accordance with the manufacturer's instructions and drawings provided in Attachment 7.

- Periodically check the tightness of platform and safety rail assembly bolts and nuts, platform anchor bolts and nuts, and tank restraint system fasteners.

4.4 Storage Tank Load-Out Pumps (Gorman-Rupp Model S3B18)

The procedure for loading tank trucks is as follows:

- Spot the tank truck so that the hose arm will reach the loading hatch.
- Lower the gangway into place, open the loading hatch, and position the hose arm over the loading hatch.
- Open the valve to the tank to be emptied and close the valve to the idle tank.
- Turn on the appropriate pump to load-out the tank.
- Monitor the tank truck to make sure it does not overflow and monitor the storage tank to make sure the liquid level is not pumped down too low. Oily materials will tend to separate from the leachate and accumulate on the liquid surface in the tank. To avoid pumping the oil into the tank truck, the pump should be stopped when the top of the pump becomes exposed.

- Turn the pump off when the loading operation has been completed.
- Leave the valve to the emptied tank open and open the valve to the idle tank to allow any liquid in the pipes to drain back to the tanks. This is especially important in the winter time to prevent freeze-up.
- Return the hose arm to its storage position.
- Close the loading hatch.
- Check for leaks and spillage.
- Authorize the truck driver to depart.

Attachment 8 contains the following operation and maintenance publications provided by Gorman-Rupp Company for the Model S3B18 submersible pumps installed in each leachate storage tank:

- Pump Safety Handbook, SM-00593 Rev.12-2001.
- S Series Submersible Pumps Manual Part 1 of 3, Installation and Operation.
- Pump Models S3B18 230V 1P, S3B18 230V/460V/575V 3P Manual Part 2 of 3, Parts List with Performance Curve.
- S Series Pumps S3B'x and S3C's Manual Part 3 of 3, Maintenance and Repair with Troubleshooting.
- Installation and Operation Manual with Parts List, Gorman-Rupp Pumps Control Boxes.

4.5 Containment Area Sump Pump Operation

The timer switch on the containment area sump pumps should be turned after a precipitation event if a check of the leachate storage tank level shows adequate tank capacity. If there is not adequate capacity in the receiving storage tank (either LST 7-1 of LST 5-1), arrangements should be made for the tank to be loaded out before the sump pump is turned on. The sump pump will turn off automatically when low water level trips the float switch or the timer switch expires, whichever occurs first. The sump pumps should be able to remove the accumulated precipitation from a 1-inch rainfall in 50 to 60 minutes.

Observe the water level in the sump to confirm that it decreases when the timer switch is turned on. If the water level does not decrease, check for leakage in the pump discharge pipe or malfunction of the pump.

If the sump pump does not come on when the timer switch is turned on, perform the following checks:

- Check to see if there is at least 16 inches of water in the sump. That is the minimum water level to operate the float switch.
- If there is adequate water level in the sump, check the outlet and circuit breaker to see if there is power to the pump.
- If there is power but the pump still does not run, pull the pump and check for a defective float switch or a clogged pump inlet.
- If the pump inlet is clogged the sump may need to be cleaned out. Make sure the sump cover is kept in place to prevent accumulation of debris in the sump.

4.6 Leachate Storage Tanks Operation and Maintenance

Attachment 9 contains the following publications provided by the tank manufacturer:

- PolyProcessing Company Incremental Capacity Sheet for Upright Tanks.
- PolyProcessing Installation Manual.

Attachment 10 contains the following publication provided by the tank manufacturer:

- Tank Heating System Installation, Operation and Maintenance Manual for Heating Systems on Poly Processing Company Storage Tanks.

The leachate storage tanks were specified with no openings in the sidewalls in order to minimize the potential for leaks. The leak detection tray underneath each storage tank should be checked periodically

during dry weather to see if the trays are overflowing continuously. Continuous overflow may be indicative of a crack in the tank or that an inlet pipe at the top of the tank is not properly securely into its opening.

The inspections and checks recommended on page 16 of the heating system manual should be performed in October or early November of each year to ensure that the heating system is in good operating condition prior to the onset of cold weather. The heating system controls should be set to maintain a minimum tank temperature of 40°F. During severely cold weather the tanks should be checked at least weekly to ensure that the contents are not freezing.

Oily materials will tend to separate from the leachate and accumulate on the liquid surface in the tank. The thickness of the oily layer should be evaluated periodically and arrangements should be made for removal and proper disposal of the oil before it accumulates to the point that it gets drawn into the load-out pumps and mixed with the aqueous phase materials in the tank trucks.

4.7 Storage Tank Level Control Systems Operation and Maintenance

Attachment 11 contains the following two manuals for the tank level control system:

- FlowLine EchoSpan Two-Wire Ultrasonic Level Transmitter Model LU81/83/84 Owner's Manual.
- FlowLine Continuous Relay Controller LC52 Series Owner's Manual.

MSG has marked up these manuals to aid in setup and calibration of the instruments. Page 2 of the second manual contains an internal wiring logic diagram, a relay logic table, and a description of the function of each relay.

4.8 Leachate Recovery Pumps

Attachment 12 contains the following manuals and supporting documents relative to the Blackhawk Model 101E piston pumps and controls that were installed at the leachate recovery wells:

- Installation and Operation Guide, Anchor Electric Piston Pump, AEPP 12-05.
- Blackhawk Environmental Company control panel wiring diagram.
- Electric Anchor Startup, Motor Rotation Is Very Important.
- Installation, Operation & Maintenance Instructions for 320 Frame and Smaller Motors.
- Warrick Series 27 Controls Installation and Operation Bulletin.
- Getting Started Guide, Commander SK AC Variable Speed Drive for 3 Phase Induction Motors, Control Techniques, Part Number 0472-0000-05, Issue 5.
- Commander SK Variable Speed Drive Additional Parameters List.
- Jefferson Electric Industrial Control/Machine Tool (transformer) Data Sheet.
- ABB Control Oy OHY 7 OHB 7 disconnect switch diagram.
- Eaton Cutler-Hammer Installation Instructions for Circuit Breakers and Molded Case Switches.

Attachment 12 also contains product information and instructions for Grundfos SQ pumps and EPG LMSA level monitoring systems and components which ESOI began to use in some wells in 2010.

Manufacturer's recommended spare parts will be inventoried at the facility.

The pump control panels contain 460 volt power and should only be opened live by qualified trained electrical personnel following the proper safety precautions as specified by the National Electrical Code.

The leachate recovery pump and control panel electrical and grounding systems should be periodically inspected by a qualified electrician to ensure that all connections are tight and in place, electrical components are in good condition, and all equipment is properly grounded.

4.9 Piping Heat Trace System Maintenance

Above-ground leachate force main pipes at the recovery wells and in the containment areas are to be electrically heat-traced and insulated prior to the onset of freezing weather. Inspections and checks recommended by the heat tracing system manufacturer should be performed in October or early November of each year to ensure that the heat trace systems are in good operating condition prior to the onset of cold weather.

4.10 Reporting

All maintenance activities on pumps, recovery wells, piping and storage tanks will be documented and retained in the maintenance file at the facility where the files may be inspected. A summary of maintenance completed will be prepared annually.

5.0 SITE CONTACT LIST

5.1 Emergency Response & Notification

For emergency issues please refer to the Contingency Plan in ESOI's RCRA Permit.

5.2 Non-Emergency Questions or Abnormal Conditions

If questions arise in regard to the operation or maintenance of the leachate recovery systems at SWMUs 5, 6 and 7 or in the event that abnormal conditions are observed, ESOI's contact persons are:

Maintenance: Mr. Don Steyer
Work # – (419) 698-3500, Ext 415
Emergency # - (419) 266-3314
Email – d.steyer@envirosafeservices.com

Environmental / Hydrogeologist: ~~Ms. Sue Richards~~Mr. Kristofer Mann
Work # – (419) 698-3500, Ext ~~435~~227
Emergency # - ~~(330) 730-2017~~(330) 347-7718
Email – ~~s.richards@envirosafeservices.com~~k.mann@envirosafeservices.com

Environmental: Mr. Ken Humphrey
Work # – (419) 698-3500, Ext. 246
Emergency # - (419) 283-0246
Email – k.humphrey@envirosafeservices.com

Scale Trailer (419) 698-3500, Ext. 417

Main Gate Guard (419) 698-3500, Ext. 403

5.3 Spillage

In case of spillage exceeding the RQ for waste materials that are discovered after normal working hours, the guard at the main gate should be notified to contact the Emergency Coordinator. The guard has a list of people to contact and their phone numbers.

If spillage is discovered during normal working hours, Don Steyer, Herb Snider or Mark Fondessy should be contacted. If none of these people are available, contact the Scale Trailer personnel, who can contact a supervisor via the radio system. If Trailer personnel are not available, the Main Gate guard should be contacted.

6.0 PERFORMANCE MONITORING PROGRAM

6.1 Overview

This Performance Monitoring Program (PMP) has been prepared consistent with ESOI's Hazardous Waste Facility Installation and Operation Permit ("Permit") Condition E.9(b)(i) for leachate collection and removal from SWMUs 5, 6 and 7.

Based upon SWMU-specific data collected during the Presumptive Corrective Measure Design (PCMD) Study presented in the *Presumptive Corrective Measures Pump Test Study Report and 30% Presumptive Corrective Measures Design Report for SWMU Nos. 5, 6 and 7*, dated August 4, 2006, ESOI developed the following performance monitoring objectives for leachate collection at SWMUs 5, 6 and 7:

1. Minimizing potential impacts to groundwater;
2. Establishing an inward hydraulic gradient at each of the SWMUs; and
3. Reduce head levels by removing leachate to the lowest level which is practicably achievable at a frequency that will promote removal without compromising equipment functionality.

The original performance monitoring objectives were accepted by Ohio EPA in a letter dated November 13, 2006 and incorporated into the Permit. Various modifications of the performance monitoring objectives have been incorporated into subsequent submittals. The objectives and the methods for evaluating leachate extraction variables are further defined in the following sections of this PMP.

6.2 Conceptual Model

Each of these SWMUs has been identified as having an accumulation of leachate within the waste mass. These SWMUs were constructed without any form of leachate collection system, and the accumulated leachate exerts downward and outward pressure due to gravity and the mass of liquid. These accumulations of leachate are suspected sources of contaminants in ESOI's perimeter shallow and deep till groundwater monitoring network wells. No non-naturally occurring constituents have been confirmed in ESOI's bedrock groundwater monitoring network wells which monitor the upper most aquifer.

Evaluation of fluid levels associated with each of the SWMUs prior to installation of the PCM showed that each unit exhibited a mounding of leachate within the waste mass and had a higher liquid head level than the surrounding monitoring wells. Unless acted upon by outside influences, fluids move from higher to lower head potentials. The glacial geology of the ESOI site tends to inhibit the movement of fluids within the underlying clays. The low permeability nature of the clay soils also tends to complicate the interpretation of the rate, direction and occurrence of groundwater movement within the shallow water-bearing units around the ESOI site.

Further hydrologic complications result due to interactions with and influence from drainage swales, local streams, ditches and several nearby, off-property landfills. Of particular note is the nearby Gradel Landfill located just to the north of ESOI's northern property line. A narrow linear pond exists on the top of this landfill facility approximately 25 to 35 feet above the existing lacustrine soils. This water body is suspected to be the driver behind leachate outbreaks which have been observed and documented along the Gradel Landfill flanks (*RCRA Facility Investigation, Second Draft, Final Report Northern Sanitary Landfill*, June 1997, Revised February 1998). While this and other nearby off-site landfills may influence shallow hydrogeology in the vicinity of the ESOI site, the PCM leachate extraction systems for SWMUs 5, 6 and 7 were not designed to affect accumulated leachate in off-property landfills.

The predicted radii of influence presented in the *Corrective Measures Pump Test Study Report and 30% Presumptive Corrective Measures Design Report for SWMU Nos. 5, 6 and 7*, dated August 4, 2006, as a circle surrounding each recovery well were based upon SWMU-specific data collected during the Presumptive Corrective Measures Design (PCMD) Study. While these units were not constructed with either synthetic or recompacted clay liners, the in-situ clays, as discussed above, and neighboring units (e.g., Cell G sheet piling wall), provide hydraulic barriers to one degree or another, which effectively limit the radial pumping effects to the outsides of the units. As such, the predicted radii of influence are not relevant beyond the SWMU boundaries.

Specific to the ESOI site, an evaluation of the pre-PCM potentiometric surface presented by the liquid levels in SWMUs 5, 6, and 7 showed a fluid front which had the potential to move to the north-northeast, toward ESOI's northern property line where it could meet a fluid front moving to the south from the Gradel Landfill. It is along this common property line between ESOI and the Gradel Landfill where a number of shallow and deep till wells have shown evidence of non-naturally occurring constituents.

Due to the heterogeneous nature of the waste masses within ESOI's SWMUs, the time periods necessary to remove the accumulated masses of leachate from these units cannot be precisely predicted. However, the PCMD Study concluded that relatively rapid reduction of leachate is possible from strategically placed extraction wells. The removal of leachate from such extraction wells and maintenance of the fluid levels within the recovery wells as low as technically feasible will, over time, induce inward hydraulic gradients, thereby reducing or eliminating the downward and outward pressure gradients from the leachate and any risks associated with impacts to groundwater.

The Closure Plan Review Guidance for RCRA Facilities, October 2009, http://epa.ohio.gov/portals/32/pdf/2008CPRG.pdf, pages 5-11 through 5-12, provides guidance regarding repairs and preventive maintenance of leachate collection systems and final covers. The intent of the guidance is post-closure plans that will provide for timely identification of repairs needed to prevent a major failure, damage or an environmental threat from occurring. This guidance is for the most part not applicable to SWMUs 5, 6, and 7 as explained below. However, SWMU 1 (Cell F) is of similar construction with the exception that it was constructed with a system to remove liquids from the cell floor. The data collected from this unit was utilized for guidance in the design and removal capacity calculations for these pre-RCRA units and acts as a good indicator of precipitation infiltration through the cap and groundwater seepage through the sidewalls.

The guidance primarily addresses facilities that are constructed to minimum technology standards (impermeable final cover systems and leachate collection systems comprised of drainage layers and collection pipe networks installed over impermeable bottom liners) which is not the case for these cells. These are pre-RCRA landfills that were constructed with native clay bottoms and sidewalls without engineered leachate collection systems to promote immediate drainage to a sump for collection and with final covers comprised of soil of varying thickness. Soil only covers may allow more infiltration of precipitation than modern minimum technology caps. When the leachate head has been reduced below surrounding shallow groundwater levels, the native clay sidewalls and bases may allow more groundwater infiltration than modern liner systems. Since the clay sidewalls and floors are low permeability native soils, any leachate generated will eventually find its way to the low points in the cell floors where it will be removed by the pumps in the leachate recovery wells. The timing of this leachate migration is dependent on the permeability of the waste that the leachate has to pass through. This may be much longer than if the bottoms and sides included a drainage layer to promote leachate collection. Another variable that may affect the rate of precipitation migration is trapped gas movement due to leachate removal. Therefore collection of data in an attempt to tie precipitation events to leachate collections rates as one may be able to do for cap monitoring in newer landfills is unlikely to produce any useful information for these pre-RCRA units.

The guidance states that "the post-closure plan should address what will be monitored (leachate flow rates, constituent concentrations) and what actions will be taken if significant changes in data occur", that "this will be specific to the LCS and the WMU", and that the measurements are "to provide information about performance of various protective design features, especially the cover and the liner systems". Because SWMUs 5, 6, & 7 do not have present day minimum technology engineered cover and liner systems, the types of failure's envisioned by the guidance (e.g., a hole or tear in a geomembrane, soil or waste settlement breaching a membrane cap or liner, slip dislocation, or drainage and/or LCS clogging) are not applicable. The corrective measures were designed to address cap and sidewall conditions as they exist and data collection parameters that will provide useful information for monitoring the performance of the units and newly installed leachate extraction systems.

6.3 Performance Monitoring Objectives

6.3.1 Minimizing Potential Impacts to Groundwater

The volumes of the contaminant sources will be decreased by reducing the leachate level within each SWMU and maintaining a decreasing trend in the leachate level until achievement of the Target Leachate Level. The reduction of fluid levels within the SWMUs will be monitored via the following mechanisms:

- Measure the fluid level(s) at the established interior piezometers.

  Table 1.0 provides an updated listing of the current fluid level monitoring points, and the latest as-built drawings in Attachment 2 depict the monitoring point locations. Each interior piezometer or recovery well used for calculation of the average leachate level within a SWMU is classified as either shallow or deep depending upon whether the base of the piezometer is above or below the applicable Target Leachate Level established in Sections 6.3.3.1 through 6.3.3.4, below. Each perimeter monitoring well is classified as either shallow till or deep till depending upon which geological stratum it is monitoring. The following schedule identifies the fluid level parameters to be evaluated and the measurement frequency:

  a. July 2007 – Measure fluid levels and record the operating status of the leachate recovery pump at each recovery well daily except for weekends and holidays, and prepare plots of fluid levels vs. time.
  b. August – November 2007 – Measure fluid levels at each interior piezometer (as identified in Table 1.0) weekly, and prepare plots of fluid levels vs. time.
  c. December 2007 – ~~June~~ November 2012 - Measure fluid levels at each interior piezometer (as identified in Table 1.0) monthly.
  d. ~~July~~ December 2012 – June 2016, ~~the monitoring frequency and schedule will be determined in consultation with Ohio EPA based upon the overall performance of the system.~~ Measure fluid levels at each interior piezometer (as identified in Table 1.0) once each calendar quarter.
  e. Beginning July 2016, the monitoring frequency and schedule will be determined in consultation with Ohio EPA based upon the overall performance of the system.
  ~~e.~~f. Annually – Prepare equipotential maps for SWMUs 5, 6, and 7, and include the maps in ESOI's "Supplemental Annual Report for Groundwater Monitoring Information" due annually on or before March 1.

- Ensure that the recovery wells are efficiently operating and pumping leachate using the following criteria:

a. Verify flow from each recovery well when leachate is present.
   1) July – November 2007 – Measure and record strokes counts weekly and estimate the cumulative volume pumped by each well and by each SWMU.
   2) December 2007 – June 2008 – Measure and record strokes counts twice monthly and estimate the cumulative volume pumped by each well and by each SWMU.
   3) July 2008 – ~~June~~ November 2012 - Measure and record monthly the volume of leachate that can be pumped directly into a calibrated bucket.
   4) ~~July~~ December 2012 – June 2016~~, the monitoring frequency and schedule will be determined in consultation with Ohio EPA based upon the overall performance of the system.~~ - Measure and record once each calendar quarter the volume of leachate that can be pumped directly into a calibrated bucket.
   ~~4)~~5) Beginning July 2016, the monitoring frequency and schedule will be determined in consultation with Ohio EPA based upon the overall performance of the system.
b. Determine (measure & record) the volume of leachate removed from each storage tank.
c. Periodically review the leachate removal rates to ensure that the removal system is operating properly.
d. Record the leachate level indicator status (no light, near-full (yellow light), or full (red light) for each storage tank on a daily basis, except for weekends and holidays.
e. Load-out full storage tanks within 24 hours of noting a full condition signal light.
f. Maintain the pumps and document downtime for maintenance.

6.3.2 Establishing an Inward Gradient at Each of the SWMUs

As indicated previously, inducement of an inward gradient within each of the SWMUs will significantly reduce if not eliminate the potential for contaminant migration from each unit. This will be accomplished by pumping leachate from the recovery wells to the extent feasible. The achievement of an inward gradient will be evaluated by monitoring the fluid levels at the established shallow perimeter monitoring wells (as identified in Table 1.0) at the same frequency established for the interior piezometers in Section 6.3.1, above.

The data generated will be used to determine that an inward gradient has been established at each SWMU based upon a comparison of the fluid levels in monitoring points inside and outside of each unit. An inward gradient will be defined as an average leachate level at a SWMU's established interior piezometers that has a head potential at least one-foot lower than the average measured liquid potential in the identified perimeter shallow till wells.

If inward gradients are confirmed within 24 months after full startup of the leachate extraction systems, the systems will be deemed to have met this performance objective. If an average one-foot drop in head level compared to the outside fluid level monitoring point is not observed within 24 months after startup of the systems, the performance of the leachate extraction systems will be evaluated to determine whether the systems will meet the established objective within an additional 12 months or supplemental corrective measures are warranted. If warranted, supplemental corrective measures will be addressed in accordance with the schedule identified in the Performance Monitoring Flow Chart, Figure 4.0.

6.3.3 Reducing Head Levels by Removing Leachate to the Lowest Level which is Practicably Achievable

Reduction of leachate head levels will be accomplished by keeping the liquid levels in the recovery wells at the lowest elevations practicably achievable without compromising equipment functionality. The recovery well pumps will be located as near the bottom of the wells as is practically feasible. A recovery well pump will be operated in accordance with the manufacturer's recommendations while leachate exists and may be turned off after three months of average interior piezometer level measurements less than ~~three~~ five[1] feet above the bottom of the recovery well if bucket tests confirm that the leachate removal rate is less than 0.05 gallons per minute (72 gallons per day).

This performance monitoring objective will be measured in accordance with the following criteria:

- Maintain a fluid level in each of the recovery wells as low as possible while maintaining pumping efficiency and ensuring the integrity of the in-situ clay liners.
- The recovery well pumps will remain operational while leachate exists at or above the elevation of the pump intake screen until turned off as outlined above unless there is an acceptable reason (i.e., normal operation, a pump goes down, maintenance of the system is required, power failure, etc.). Reasons for pumps being turned off (other than normal operation or briefly for recovery well leachate level measurements and minor maintenance activities) will be documented and explained in ESOI's operating record.
- A Target Leachate Level representing a 90 percent reduction in leachate volume has been calculated for each of four SWMU areas (5 West Area, 5 Central Area, 6, and 7) based on leachate removal modeling presented in Tables 2, 2a, 3, and 4 of the "2-Year Evaluation Report for the Presumptive Corrective Measures (Leachate Collection Systems) at Solid Waste Management Units 5, 6, and 7". Table 2 presents the Target Leachate Levels, the base of waste elevation for each recovery well and interior piezometer (if available), and the initial leachate level for each recovery well and interior piezometer (based on depth to liquid measurements taken in April or June 2007, if available). ESOI will achieve an average leachate level in each SWMU area less than the Target Leachate Level as described in Sections 6.3.3.1 through 6.3.3.4, below.

6.3.3.1 SWMU 5 - Central Area

No later than July 1, 2016, ESOI will demonstrate that the average head level in the SWMU 5 central area has been reduced in accordance with this section by documenting that the average of the leachate head level measurements from the deep interior piezometers, as identified in Table 1.0, and any other deep interior piezometer locations established in the future with concurrence from Ohio EPA is below 557.1 ft MSL and that the SWMU is "dewatered" in the vicinities of the shallow interior piezometers, as identified in Table 1.0. The SWMU will be considered to be "dewatered" in the vicinity of a shallow interior monitoring piezometer listed in Table 1 if one of the following criteria is met:

- one-foot or less of leachate is determined to be present within the piezometer above the established base of waste elevation at ~~each~~ the piezometer, as listed in Table 2~~.~~ or
- the leachate level at the nearest deep interior piezometer is below the Target Leachate Level.

As of September 2012 there were no shallow interior piezometers in the SWMU 5 central area.

[1] Five feet from the bottom is about the lowest the centrifugal pumps can dewater if installed exactly on the bottom of the well. Many of the pumps may not be installed exactly on the bottom for various reasons such as silting. This action level will be reviewed as more wells reach this point.

6.3.3.2 SWMU 5 - West Area

No later than July 1, 2016, ESOI will demonstrate that the average head level in the SWMU 5 western shallow area has been reduced in accordance with this section by documenting that the average of the leachate head level measurements from the deep interior piezometers, as identified in Table 1.0, and any other deep interior piezometer locations established in the future with concurrence from Ohio EPA is below 564.9 ft MSL and that the SWMU is "dewatered" in the vicinities of the shallow interior piezometers, as identified in Table 1.0. The SWMU will be considered to be "dewatered" in the vicinity of a shallow interior monitoring piezometer listed in Table 1 if one of the following criteria is met:

- one-foot or less of leachate is determined to be present within the piezometer above the established base of waste elevation at ~~each~~ the piezometer, as listed in Table 2~~.~~ or
- the leachate level at the nearest deep interior piezometer is below the Target Leachate Level.

As of September 2012 there were no shallow interior piezometers in the SWMU 5 west area.

6.3.3.3 SWMU 6

No later than July 1, ~~2012~~2013, ESOI will demonstrate that the average head level in SWMU 6 has been reduced in accordance with this section by documenting that the average of the leachate head level measurements from the deep interior piezometers, as identified in Table 1.0, and any other deep interior piezometer locations established in the future with concurrence from Ohio EPA is below 566.9 ft MSL and that the SWMU is "dewatered" in the vicinities of the shallow interior piezometers, as identified in Table 1.0. The SWMU will be considered to be "dewatered" in the vicinity of a shallow interior monitoring piezometer listed in Table 1 if one of the following criteria is met:

- one-foot or less of leachate is determined to be present within the piezometer above the established base of waste elevation at ~~each~~ the piezometer, as listed in Table 2~~.~~ or
- the leachate level at the nearest deep interior piezometer is below the Target Leachate Level.

As of September 2012 there were two shallow interior piezometers in SWMU 6, PZ-4 and PZ-14. Shallow recovery wells RW-5, RW-6, and RW-7 will not be reclassified as shallow interior piezometers until they are no longer being used as recovery wells.

6.3.3.4 SWMU 7

No later than July 1, 2014, ESOI will demonstrate that the average head level in SWMU 7 has been reduced in accordance with this section by documenting that the average of the leachate head level measurements from the deep interior piezometers, as identified in Table 1.0, and any other deep interior piezometer locations established in the future with concurrence from Ohio EPA is below 570.8 ft MSL and that the SWMU is "dewatered" in the vicinities of the shallow interior piezometers, as identified in Table 1.0. The SWMU will be considered to be "dewatered" in the vicinity of a shallow interior monitoring piezometer listed in Table 1 if one of the following criteria is met:

- one-foot or less of leachate is determined to be present within the piezometer above the established base of waste elevation at ~~each~~ the piezometer, as listed in Table 2~~.~~ or
- ~~-~~the leachate level at the nearest deep interior piezometer is below the Target Leachate Level.

As of September 2012 there were no shallow interior piezometers in SWMU 7.

6.4 Maintenance of Leachate Levels below the Target Leachate Level

Even after achievement of an average interior leachate level less than the Target Leachate Level, the levels are expected to fluctuate due to factors such as changes in atmospheric pressure, movements of pockets of perched liquids, interference of non-aqueous phase liquids with the liquid level probe, foaming due to gas bubbles, etc. The response of fluid levels in different locations within a SWMU will vary due to various factors such as distance from extraction wells, nature of the in-place waste materials, and disposal cell construction peculiarities. It is also likely that some irremovable quantity of moisture or liquid could remain within the shallow interior fluid level monitoring piezometers due to humidity/condensation, piezometer construction or heterogeneities within the waste mass. Such factors may result in excursions of the average leachate level above the Target Leachate Level, a leachate head level measurement in an individual deep interior piezometer above the Target Leachate Level, non-decreasing trends in individual deep interior piezometers whose leachate levels exceed Target Leachate Levels, or a "non-dewatered" condition in a shallow interior piezometer.

After establishment of an average leachate level less than the Target Leachate Level for a SWMU as described in Sections 6.3.3.1 through 6.3.3.4, above, ESOI will:

- maintain the average of the leachate head level measurements from the deep interior piezometers below the Target Leachate Level, and
- maintain decreasing leachate level trends in individual deep interior piezometers whose leachate levels exceed the Target Leachate Level, and
- maintain each shallow interior piezometer in a "dewatered" state as defined in Sections 6.3.3.1 through 6.3.3.4, above.

ESOI will evaluate on a quarterly basis the status of the above listed criteria. ESOI will use available monitoring data for the calendar quarter and will complete the evaluation within 30 days after the end of each calendar quarter. As part of the evaluation ESOI will prepare plots of fluid levels vs. time at each interior piezometer with leachate present above the Target Leachate Level. If any of the criteria are found to have not been maintained, ESOI will take the following response actions:

a. Level 1 Response – Resample the problem piezometers within seven days after completing the data evaluation to verify that the problem readings have been recorded for the correct piezometers and note any factors that may have contributed to the increased level or interfered with the measurement (e.g., recent precipitation, depressed area around the piezometer, ponding, condensation on a cold level probe, NAPL in the piezometer, gas bubbles, malfunctioning leachate removal system, etc.).
b. Level 2 Response – If the Level 1 Response confirms the problem readings, notify Ohio EPA in writing within thirty days of the confirming readings, monitor the leachate level in the affected piezometers biweekly until the excursion has been eliminated, and implement one or more of the following additional response actions, as appropriate:
    1) Take corrective actions as necessary to maintain positive drainage away from each internal piezometer and prevent infiltration along the riser.
    2) Eliminate any ponding near the piezometers.
    3) Use absorbent material to remove NAPL from the piezometer.

4) Sound the piezometers to determine whether accumulated sediment may be interfering with performance of the piezometer.
5) Bail or pump out the affected piezometers to remove accumulated NAPL and sediment.
6) Bail or pump out the piezometers and monitor recovery of the leachate levels to evaluate whether the recorded levels are representative of perched liquid or of the general leachate level.
7) Redevelop the affected piezometers.
8) Modify or replace the piezometers to eliminate interferences.
9) Resurvey the affect piezometers to assure that the correct reference elevations are being used.
10) Make improvements to the leachate extraction system to increase the rate and consistency of leachate removal.

c. Level 3 Response – Provide a written progress report to Ohio EPA within 90 days of the date of the initial notification and quarterly thereafter (due on February, May, August, and November 15) until the excursion has been eliminated. Provide the following information in each progress report:
    1) Identification of the affected piezometers and SWMU area.
    2) Date of the initial measurement that exhibited non-maintenance of the relevant criteria.
    3) Trend chart for the affected piezometers.
    4) Description and date of each response action taken since the initial measurement that exhibited non-maintenance of the relevant criteria.
    5) Description and implementation schedule of proposed additional response actions.

6.5 Remedy Evaluation and Supplemental Corrective Action

In accordance with the schedule identified in Figure 4.0, the performance of the leachate extraction systems will be evaluated after 24 months of operation to determine if the objectives identified in Sections 6.3.1 through 6.3.3 are being met. The operation and performance of the leachate extraction systems will also be reevaluated and may be amended, as appropriate, based upon the findings and risk assessment in conjunction with the ongoing RCRA Facility Investigation (RFI).

Recovery well maintenance will be addressed when identified, in accordance with preceding sections of this O&M and Performance Monitoring Plan. If after 24 months of operation, a recovery well or internal piezometer is determined to not be performing as required by the performance objectives discussed in Section 6.3, the recovery well or piezometer will be evaluated to determine the likely cause(s) for said underperformance and the need for corrective action. If recommended, corrective action alternatives and a schedule for implementation will be developed and shared with Ohio EPA.

The monitoring procedures described above focus on the performance of the leachate removal systems, the only modern engineered systems that these SWMUs have. Evaluation of the effectiveness of the corrective measures is based on long-term trends because the starting point was saturated conditions without engineered drainage pathways. The performance demonstration schedule allows two years for establishing inward gradients and five to nine years for achievement of 90 percent reductions in leachate heads above the pump control zones. During those time periods leachate recovery rates are expected to decline at generally decreasing rates but with fluctuations in levels at various piezometers and fluctuations in volumes of leachate produced at various recovery wells as leachate migration pathways develop in the waste and pockets of perched leachate are able to drain to lower levels. Landfill gas movement and generation phenomena in response to dewatering and barometric pressure changes may also cause temporary localized fluctuations in leachate levels and migration rates.

Table 1 of the PCMD Work Plan conservatively predicted long-term leachate generation due to infiltration in each SWMU on the order of 100,000 gallons per year. This is less than fifteen percent of the maximum

production capacity of a single leachate recovery pump and suggests a likely upper limit to the long term steady state leachate production rate for each SWMU. (An additional 40,000 to 100,000 gallons of precipitation is expected to be captured in each storage tank containment area each year.) Due to the heterogeneity of the wastes it is impossible to precisely predict at this time how long it will take to approach steady state conditions but the dates specified for achievement of the Target Leachate Levels are reasonable estimates

6.6 Groundwater Quality Data

Groundwater quality will be measured according to the schedule required by ESOI's Integrated Groundwater Monitoring Program (IGWMP). These data will be reported to Ohio EPA semi-annually in accordance with the schedule specified in ESOI's RCRA Permit.

6.7 Reporting

Operational activities will be documented and retained in a file at the facility where the files may be inspected. A summary of the operation of the Leachate Collection Systems at SWMUs 5, 6, and 7 will be prepared annually and included in the facility's ESOI's "Supplemental Annual Report for Groundwater Monitoring Information" due annually on or before March 1st.

Items to be included, at a minimum, in ESOI's "Supplemental Annual Report for Groundwater Monitoring Information" due annually on or before March 1st:

- Equipotential maps for SWMUs 5, 6, and 7.
- Summary of gallons of leachate removed from SWMUs 5, 6, and 7.
- Summary discussion of how closely actual volumes removed match predicted volumes.
- Summary of construction, maintenance and/or system repairs completed during the preceding year.
- Summary statement of the actual operational performance standards for the preceding year, as identified in Section 8.4.3.
- Summary statement of overall leachate extraction performance for SWMUs 5, 6, and 7 during the preceding year.

TABLES

Envirosafe Services of Ohio, Inc.

Table 1. SWMUs 5, 6, and 7 Fluid Level Monitoring Locations[4]

Solid Waste Management Unit	Recovery Wells[3]	Interior Piezometers[2]		Perimeter Monitoring Points	
		Deep	Shallow	Deep Till	Shallow Till
SWMU 5 - Central Area	RW-3	RW-3		MR-3D	F-1S
	RW-11 (PZ-8)	RW-11 (PZ-8)			G-1S[4]
	NRP-24	NRP-24			MR-1SA[4]
		PZ-5			MR-4S
		PZ-6			MR-5S
		PZ-7			MR-7S[4]
		PZ-21			
		PZ-22			
		PZ-23			
SWMU 5 - West Area	~~RW-4~~	PZ-13			MR-2S
	NRP-31	NRP-31			MR-6S
SWMU 6	RW-1	RW-1	PZ-4	SW2D	H-2S
	RW-5[1]	~~PZ-1~~[5]	PZ-14		SW-1S
	RW-6[1]	~~PZ-2~~[5]	RW-5[1]		SW-2S
	RW-7[1]	PZ-3	RW-6[1]		SW-3S
	RW-8	PZ-15	RW-7[1]		T-8S
	DPW-16	DPW-16			
	NRP-25	NRP-25			
	NRP-26	NRP-26			
	NRP-27	NRP-27			
	NRP-28	NRP-28			
SWMU 7	RW-2	RW-2		G10A	T-5S
	RW-9	~~PZ-9~~[6]			T-8S
	~~RW-10~~	PZ-10			T-15S
	RW-12 (PZ-12)	PZ-11			T-43S
	DPW-18	DPW-18			
	DPW-19	DPW-19			
	DPW-20	DPW-20			
	NRP-29	NRP-29			
	NRP-30	NRP-30			

1. RW-5, RW-6, and RW-7 will be used as recovery wells until they meet the criteria for "dewatered" shallow interior piezometers as defined in Section 6.3.3.3.

2. Deep piezometers are at locations with basal clay elevations below the Target Leachate Level (TLL) and are screened below the TLL. Shallow piezometers are at locations with basal clay elevations above the Target Leachate Level (TLL) and are not screened below the TLL. Shallow piezometers will be used to verify that leachate in the area has drained to leachate recovery wells in deeper areas of the respective SWMU.

3. Strikeout indicates discontinuance of the designated use. RW-4 and RW-10 are inoperable and unable to be pulled for maintenance due to shifts in the risers.

4. Exterior monitoring wells G-1S, MR-1SA, and MR-7S were added to the evaluation network for SWMU 5 in 2010 until a better understanding of the potentiometric high to the south southeast of SWMU 5 (Central) has been achieved.

5. PZ-1 and PZ-2 are excluded from TLL calculations because these wells are located in a formation (eg., access ramp, roadway, or trench sidewall) that is not strongly affected by pumping of adjacent wells and are not representative of the leachate level across SWMU 6.

6. PZ-9 is excluded from TLL calculations because this piezometer is located in a formation (eg., access ramp, roadway, or trench sidewall) that is not strongly affected by pumping of adjacent wells and is not representative of the leachate level across SWMU 7.

Envirosafe Services of Ohio, Inc.
Table 2. SWMUs 5, 6, and 7
Target Leachate Levels, Base of Waste, Nominal Pump Intake, and Initial Leachate Level Elevations

Solid Waste Management Unit	Recovery Well or Piezometer	Base of Waste Elevation	Source of Base of Waste Elevation	Nominal Pump On Elevation	Initial Leachate Level	Source of Initial Leachate Level
SWMU 5 - Central Area	RW-3	533.99	06 well log base of well	538.99	581.13	6/19/07 level & casing el
Target Leachate Level = Elevation 557.1	RW-11 (PZ-8)	533.30	06 well log base of waste	538.30	577.76	6/19/07 level & 8/1/07 casing el
	NRP-24	536.35	AS-BUILT.E1080071.GEN.GAB.2011Wells.xls	541.35	NA	
	PZ-5	548.29	06 well log base of waste		582.92	6/19/07 level & 8/1/07 casing el
	PZ-6	542.58	06 well log base of waste		578.49	6/19/07 level & 8/1/07 casing el
	PZ-7	530.34	06 well log base of waste		578.58	6/19/07 level & 8/1/07 casing el
	PZ-21	532.90	2010 well log & survey		NA	
	PZ-22	533.99	2010 well log & survey		NA	
	PZ-23	538.49	2010 well log & survey		NA	
SWMU 5 - West Area	~~RW-4~~	~~555.50~~	~~well log and ex. cond. topo~~	~~560.50~~	~~579.26~~	~~Apr 07 level & casing el~~
Target Leachate Level = Elevation 564.9	NRP-31	556.48	AS-BUILT.E1080071.GEN.GAB.2011Wells.xls	561.48	NA	
	PZ-13	557.18	Apr 07 sounding, 8/1/07 survey		579.94	6/19/07 level & 8/1/07 casing el
SWMU 6	RW-1	544.76	06 base of well	549.76	591.38	06 casing el & Apr 07 level
Target Leachate Level = Elevation 566.9	RW-8	552.00	well log, bench plan, and ex. cond. topo	557.00	592.11	Apr 07 level & casing el
	DPW-16	551.65	2010 well log & survey	556.65	NA	
	NRP-25	556.17	AS-BUILT.E1080071.GEN.GAB.2011Wells.xls	561.17	NA	
	NRP-26	547.38	AS-BUILT.E1080071.GEN.GAB.2011Wells.xls	552.38	NA	
	NRP-27	552.90	AS-BUILT.E1080071.GEN.GAB.2011Wells.xls	557.90	NA	
	NRP-28	548.19	AS-BUILT.E1080071.GEN.GAB.2011Wells.xls	553.19	NA	
	PZ-1	550.04	06 well log base of waste		592.07	6/19/07 level & 8/1/07 casing el
	PZ-2	549.02	06 well log base of waste		591.55	6/19/07 level & 8/1/07 casing el
	PZ-3	542.45	06 well log base of waste		592.06	6/19/07 level & 8/1/07 casing el
	PZ-4	567.17	06 well log base of waste		588.76	6/19/07 level & 8/1/07 casing el
	PZ-14	577.58	Apr 07 sounding, 8/1/07 survey		592.03	6/19/07 level & 8/1/07 casing el
	PZ-15	555.26	Apr 07 sounding, 8/1/07 survey		592.05	6/19/07 level & 8/1/07 casing el
	RW-5 (when dry, use as piezometer)	574.00	well log, bench plan, and ex. cond. topo	579.00	593.15	Apr 07 level & casing el
	RW-6 (when dry, use as piezometer)	580.00	well log, bench plan, and ex. cond. topo	585.00	594.00	Apr 07 level & casing el
	RW-7 (when dry, use as piezometer)	578.00	well log, bench plan, and ex. cond. topo	583.00	591.52	Apr 07 level & casing el
SWMU 7	RW-2	563.06	06 base of well	568.06	593.15	06 casing el & Apr 07 level
Target Leachate Level = Elevation 570.8	RW-9	559.00	well log and ex. cond. topo	564.00	591.35	Apr 07 level & casing el
	RW-12 (PZ-12)	564.85	06 well log base of waste	569.85	594.96	6/19/07 level & 8/1/07 casing el
	DPW-18	561.15	2010 well log & survey	566.15	NA	
	DPW-19	562.69	2010 well log & survey	567.69	NA	
	DPW-20	561.67	2010 well log & survey	566.67	NA	
	NRP-29	562.96	AS-BUILT.E1080071.GEN.GAB.2011Wells.xls	567.96	NA	
	NRP-30	551.60	AS-BUILT.E1080071.GEN.GAB.2011Wells.xls	556.60	NA	
	PZ-9	558.19	06 well log base of waste		591.88	6/19/07 level & 8/1/07 casing el
	PZ-10	559.96	06 well log base of waste		593.96	6/19/07 level & 8/1/07 casing el
	PZ-11	564.33	06 well log base of waste		594.74	6/19/07 level & 8/1/07 casing el
	~~RW-10~~	~~574.00~~	~~well log and ex. cond. topo~~		~~593.60~~	~~Apr 07 level & casing el~~

Notes: TBD = to be determined. NA = not available. Initial leachate levels were determined based on depths to liquid measured in April or June 2007. Nominal Pump On Elevation = Base of Waste Elevation + 5'. Strikeout indicates discontinuance of the designated use.

FIGURES

ATTACHMENT 1

Well and Piezometer Logs

ATTACHMENT 2

As-Built Drawings

2/24/2012

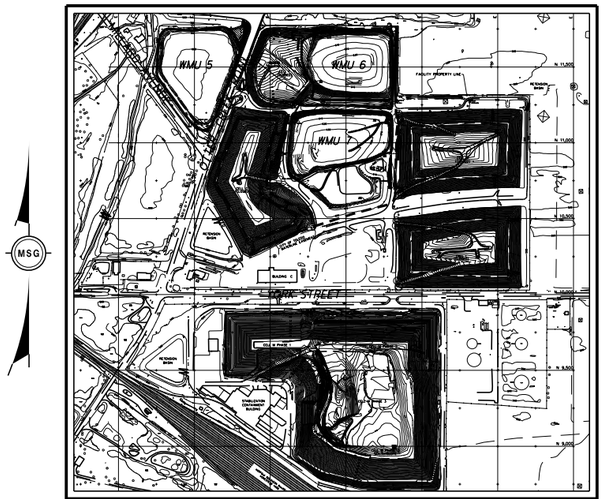

LOCATION MAP

ENVIROSAFE SERVICES OF OHIO, INC.

CITY OF OREGON
LUCAS COUNTY, OHIO

LEACHATE RECOVERY SYSTEM
2011 ENHANCEMENTS
AS-BUILT DRAWINGS

INDEX OF SHEETS

TITLE SHEET C01
WMU 5 - LEACHATE WELL & FORCEMAIN PLAN C02
WMU 6 - LEACHATE WELL & FORCEMAIN PLAN C03
WMU 7 - LEACHATE WELL & FORCEMAIN PLAN C04
PASSIVE GAS VENT DETAILS C05
NESTED WELL DETAILS AND SPECIFICATIONS C06
DRILLING BENCHES AND PIPE AND PUMP DETAILS C07
WMU 5 ELECTRICAL LINE DIAGRAM E01
WMU 6 & 7 ELECTRICAL LINE DIAGRAM E02
WMU 5, 6 & 7 ELECTRICAL PLAN VIEW E03
RECOVERY WELL ELECTRICAL DIAGRAM E04
ELECTRICAL ENCLOSURE DETAILS E05
TYPICAL TRENCH DETAILS M01
PROCESS AND INSTRUMENTATION DIAGRAM I01

ENGINEER'S SEAL

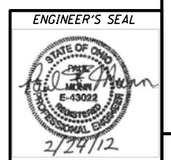

NO.	DATE	BY	DESCRIPTION
1	02/22/2012	SGW	COA REPORT

The Mannik & Smith Group, Inc.
Civil Engineering, Surveying and Environmental Consulting

CLIENT
ENVIROSAFE
ENVIROSAFE SERVICES OF OHIO, INC.

PROJECT
LEACHATE RECOVERY SYSTEM
2011 ENHANCEMENTS AS-BUILT

TITLE SHEET

C01

S:\Projects\Projects A-E\E1080071\CAD\2011 LRS COA\PLANS\E1080071_01_0_C01.dgn

2/24/2012

GRAPHIC SCALE

0' 25' 50' 100'

LEGEND

———	WMU LIMITS AS SHOWN ON RFI WORK PLAN
⊕	EXISTING WELL
⊞	EXISTING PIEZOMETER
⬡	EXISTING RECOVERY WELL
⬢	EXISTING RECOVERY WELL (CONVERTED PIEZOMETER)
▫G PV-7	EXISTING PASSIVE GAS VENT
ø ϕP	UTILITY POLE
- - - - -	EXISTING HDPE LEACHATE COLLECTION PIPE
NRP-	AS-BUILT NESTED RECOVERY WELL AND PIEZOMETER
DPW-	AS-BUILT CONVERSION TO DUAL PURPOSE RECOVERY WELL/PIEZOMETER
- - - - -	AS-BUILT HDPE LEACHATE COLLECTION PIPE
▫G PV-9	AS-BUILT PASSIVE GAS VENT

ENGINEER'S SEAL

STATE OF OHIO
PAUL E. MANN
E-43022
REGISTERED PROFESSIONAL ENGINEER
2/24/12

NO.	DATE	BY	DESCRIPTION
1	02/22/2012	SGW	CQA REPORT

The Mannik & Smith Group, Inc.
Civil Engineering, Surveying and Environmental Consulting

CLIENT
ENVIROSAFE
ENVIROSAFE SERVICES OF OHIO, INC.

PROJECT
LEACHATE RECOVERY SYSTEM
2011 ENHANCEMENTS AS-BUILT

WMU5
LEACHATE WELL & FORCEMAIN PLAN

C02

S:\Projects\Projects A-E\E1080071\CAD\2011 LRS CQA\PLANS\E1080071_02_Q_C02.dgn

2/24/2012

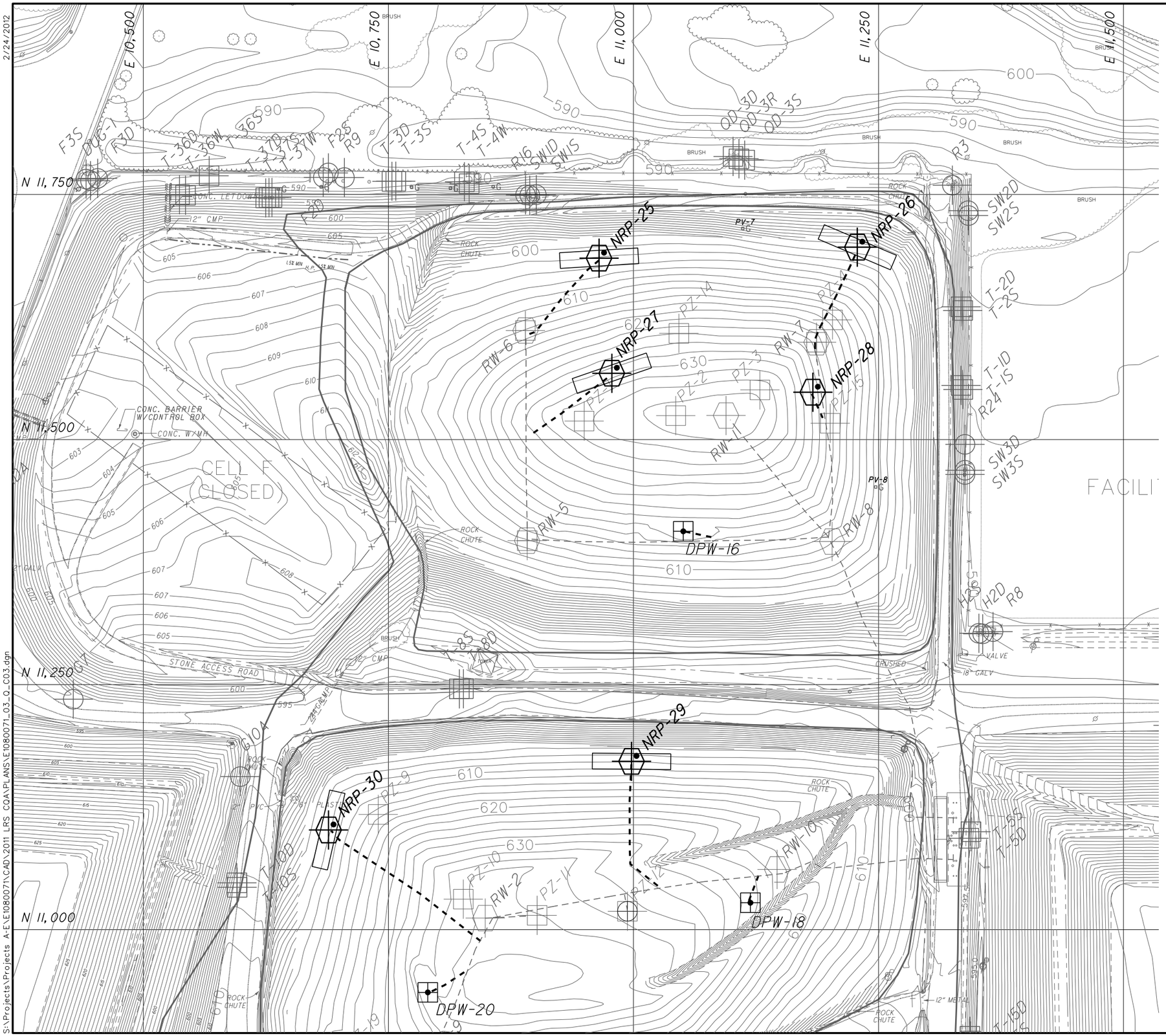

GRAPHIC SCALE

0' 25' 50' 100'

LEGEND

———	WMU LIMITS AS SHOWN ON RFI WORK PLAN
	EXISTING WELL
	EXISTING PIEZOMETER
	EXISTING RECOVERY WELL
	EXISTING RECOVERY WELL (CONVERTED PIEZOMETER)
G PV-7	EXISTING PASSIVE GAS VENT
	UTILITY POLE
- - - - - -	EXISTING HDPE LEACHATE COLLECTION PIPE
NRP-	AS-BUILT NESTED RECOVERY WELL AND PIEZOMETER
DPW-	AS-BUILT CONVERSION TO DUAL PURPOSE RECOVERY WELL/PIEZOMETER
- - - - - -	AS-BUILT HDPE LEACHATE COLLECTION PIPE
	80'x16' DRILLING BENCH (BY OWNER)

ENGINEER'S SEAL

STATE OF OHIO — PAUL W. MANN — E-43022 — REGISTERED PROFESSIONAL ENGINEER

2/24/12

NO.	DATE	BY	DESCRIPTION
1	02/22/2012	SGW	COA REPORT

The Mannik & Smith Group, Inc.
Civil Engineering, Surveying and Environmental Consulting

CLIENT
ENVIROSAFE
ENVIROSAFE SERVICES OF OHIO, INC.

PROJECT
LEACHATE RECOVERY SYSTEM
2011 ENHANCEMENTS AS-BUILT

WMU6
LEACHATE WELL & FORCEMAIN PLAN

C03

S:\Projects\Projects A-E\E1080071\CAD\2011 LRS CQA\PLANS\E1080071_03_Q_C03.dgn

2/24/2012

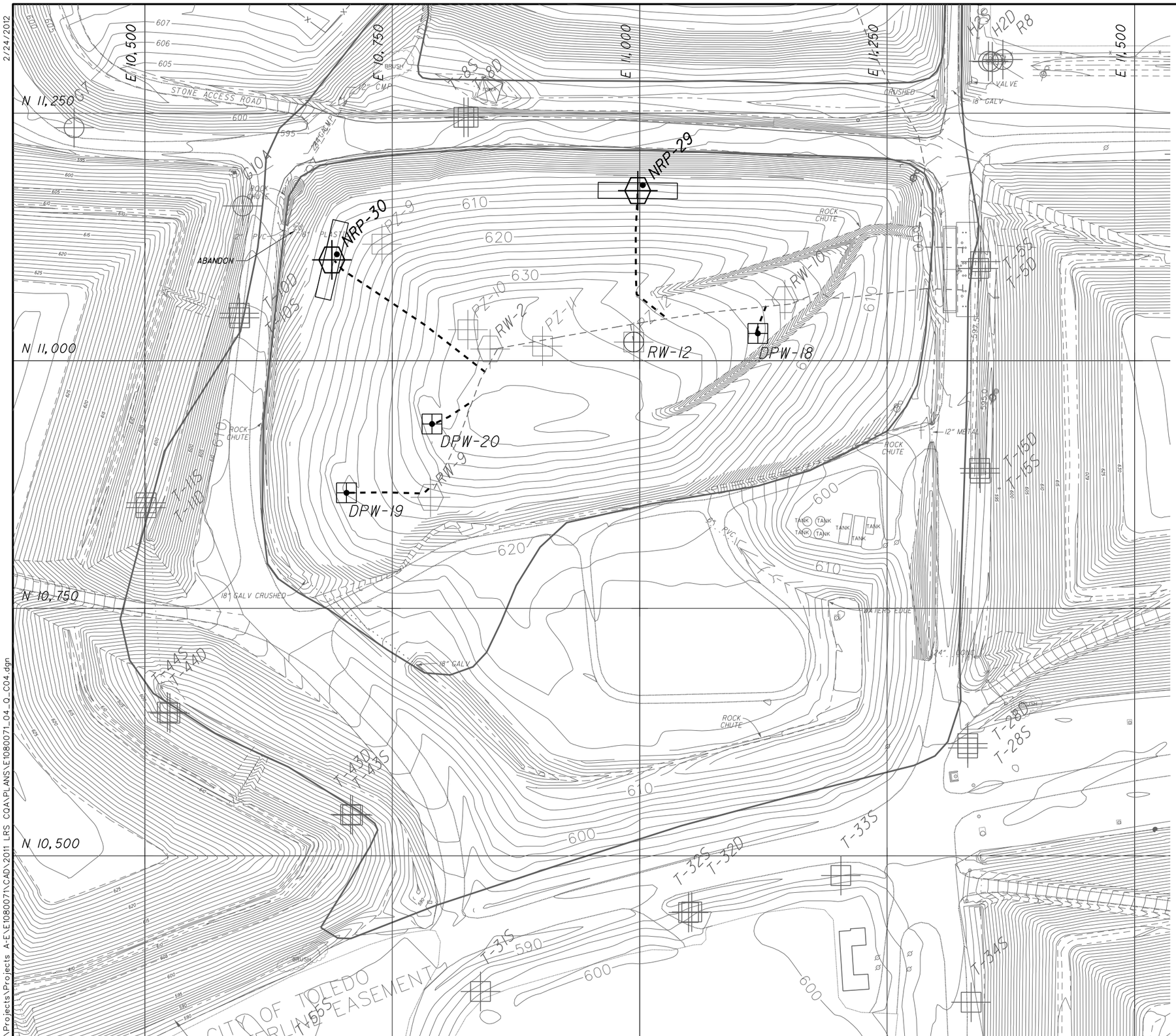

GRAPHIC SCALE

0' 25' 50' 100'

LEGEND

	WMU LIMITS AS SHOWN ON RFI WORK PLAN
	EXISTING WELL
	EXISTING PIEZOMETER
	EXISTING RECOVERY WELL
	EXISTING RECOVERY WELL (CONVERTED PIEZOMETER)
PV-7	EXISTING PASSIVE GAS VENT
	UTILITY POLE
	EXISTING HDPE LEACHATE COLLECTION PIPE
NRP-	AS-BUILT NESTED RECOVERY WELL AND PIEZOMETER
DPW-	AS-BUILT CONVERSION TO DUAL PURPOSE RECOVERY WELL/PIEZOMETER
	AS-BUILT HDPE LEACHATE COLLECTION PIPE
	80'x16' DRILLING BENCH (BY OWNER)

ENGINEER'S SEAL

STATE OF OHIO
PAUL E. MANN
E-43022
REGISTERED
PROFESSIONAL ENGINEER

2/24/12

NO.	DATE	BY	DESCRIPTION
1	02/22/2012	SGW	COA REPORT

The Mannik & Smith Group, Inc.
Civil Engineering, Surveying and Environmental Consulting

CLIENT
ENVIROSAFE
ENVIROSAFE SERVICES OF OHIO, INC.

PROJECT
LEACHATE RECOVERY SYSTEM
2011 ENHANCEMENTS AS-BUILT

WMU7
LEACHATE WELL & FORCEMAIN PLAN

C04

S:\Projects\Projects A-E\E108071\CAD\2011 LRS COA\PLANS\E108071_04_Q_C04.dgn

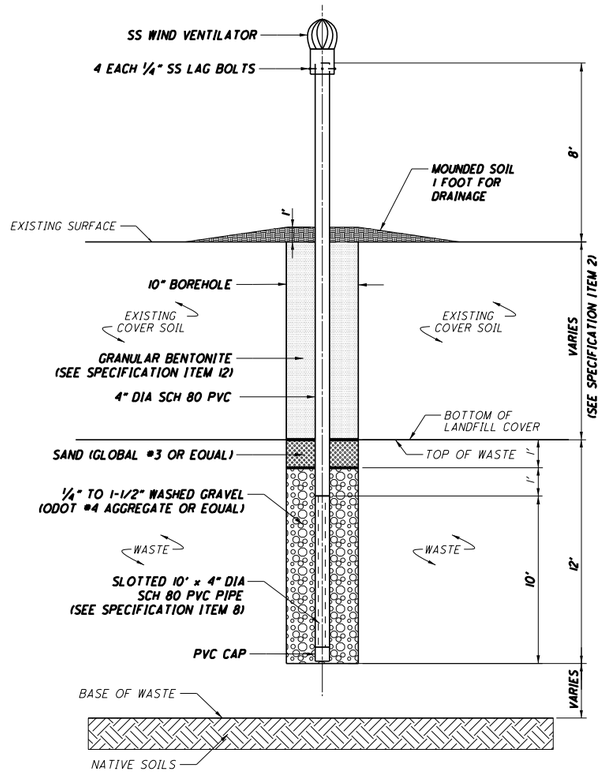

PASSIVE GAS VENT DETAIL
(Typical Of PV-9 AND PV-10)

SCALE: N.T.S.

PASSIVE GAS VENT SPECIFICATIONS

1. DRILLED AND INSTALLED TWO PASSIVE GAS VENTS (PV-9 AND PV-10) AS DEPICTED ON SHEETS C02 AND C05 OF THE LEACHATE RECOVERY SYSTEM 2011 ENHANCEMENTS DESIGN DRAWINGS.
2. SEE AS-BUILT PASSIVE GAS VENT SCHEDULE FOR CONSTRUCTED ELEVATIONS, DEPTHS, AND LENGTHS.
3. UTILIZED SONIC DRILLING.
4. OWNER'S ENGINEER PROVIDED A QUALITY CONTROL REPRESENTATIVE THAT WAS PRESENT DURING DRILLING TO OBSERVE AND DOCUMENT THE WORK.
5. COORDINATED ALL PHASES OF THE WORK WITH THE ENGINEER/QUALITY CONTROL REPRESENTATIVE.
6. DRILLED TO 12 FEET BELOW TOP OF WASTE.
7. SET THE BASE OF THE SLOTTED OR PERFORATED SECTION OF THE PASSIVE GAS VENT ON THE BASE OF THE BORING.
8. THE SLOTTED SECTION IS 10' X 4" SCH 80 PVC WITH 1/8" TO 3/16" WIDE BY 3" LONG VERTICAL SLOTS. INSTALLED SLOTTED SECTION SO THAT TOP OF SLOTTED SECTION IS 2.0' BELOW TOP OF WASTE.
9. THE SOLID RISER IS 4" SCHEDULE 80 PVC PIPE AND EXTENDED TO 8 FEET ABOVE EXISTING GRADE.
10. INSTALLED 1/4" TO 1-1/2" WASHED GRAVEL (ODOT #4 AGGREGATE OR EQUAL) TO 1.0 FOOT ABOVE TOP OF SLOTTED SECTION.
11. INSTALLED 1 FOOT OF SAND (GLOBAL #3 OR EQUAL) ABOVE TOP OF GRAVEL.
12. INSTALLED A BENTONITE SEAL ABOVE SAND LAYER TO GROUND SURFACE AS INDICATED IN THE DRAWING. INTRODUCED GRANULAR BENTONITE TO ANNULAR SPACE IN A MANNER THAT ALLOWED EVEN PLACEMENT AROUND RISER. ADDED 1 GALLON OF WATER FOR EVERY 6 INCHES OF EMPLACED SEAL.
13. MOUNDED SOIL AROUND PASSIVE GAS VENT AS INDICATED ON THE DRAWING TO PROVIDE POSITIVE DRAINAGE.
14. FURNISHED RISER AND SLOTTED PIPE IN NEW AND GOOD CONDITION, CLEARLY LABELED.
15. FURNISHED GRANULAR BENTONITE AND GRANULAR FILTER MATERIALS IN BAGS FREE OF RIPS OR TEARS.
16. PROTECTED PRODUCTS AND MATERIALS FROM PHYSICAL DAMAGE DURING CONSTRUCTION.
17. INSTALLED BORINGS PLUMB AND STRAIGHT.
18. INSTALLED STAINLESS STEEL WIND VENTILATOR ON TOP OF RISER USING FOUR 1/4" STAINLESS STEEL LAG BOLTS.
19. COLLECTED DRILL CUTTINGS FOR DISPOSAL. PLACED CUTTINGS IN ROLL-OFF BOX PROVIDED BY OWNER FOR DISPOSAL BY OWNER.
20. TRANSPORTED OR PUMPED LIQUIDS ENCOUNTERED DURING DRILLING TO STORAGE TANKS OR TANK TRUCKS PROVIDED BY OWNER FOR DISPOSAL BY OWNER.
21. DID NOT SPILL LIQUIDS ON THE GROUND.
22. ALL EQUIPMENT, UNUSED MATERIALS, TEMPORARY FACILITIES, DEBRIS, AND MISCELLANEOUS ITEMS RESULTING FROM OR USED IN THE OPERATIONS WERE REMOVED AT EACH DRILLING LOCATION. SITE WAS RESTORED AS CLOSE AS POSSIBLE TO ORIGINAL CONDITION.

AS-BUILT SWMU 5 PASSIVE GAS VENT SCHEDULE

Nested Recovery Well and Piezometer	PV-9	PV-10	
Waste Management Unit	5	5	Total Lengths
Northing	11675.03	11709.96	
Easting	9810.06	9824.92	
Grade El.	589.55	589.34	
Top of Waste El.	584.55	584.34	
Basal Clay El.	572.55	572.34	
Gas Vent Bottom El.	572.55	572.34	
Depth to Basal Clay from Grade (ft)	17.0	17.0	34.0
Depth to Waste from Grade (ft)	5	5	
Waste Thickness (ft)	12.0	12.0	
Borehole Dia. (inches)	10	10	
Depth of Gravel Pack	11	11	22.0
Gravel Pack Mat. (washed ODOT #4 aggregate or equal)	3/4" to 1.5"	3/4" to 1.5"	
Thickness of Sand Layer	1.0'	1.0'	
Sand Layer Mat. (Global #3)	1/8 to 1/4"	1/8 to 1/4"	
Riser El. - to 8' above grade	597.6	597.3	
Vent Length from Top of Riser (ft)	25.0	25.0	50.0
Solid Riser Length, including stickup[1] (ft) - estimate	15.0	15.0	30.0
Slotted Length[2] (ft)	10	10	20
Riser/Screen Dia. (inches)	4	4	
Screen Slot Size[2] (inches)	3/16"	3/16"	

1. The gas vent solid riser material is 4" Sch 80 PVC.

2. The slotted length is 10' x 4" Sch 80 PVC with 1/8" to 3/16" wide by 3" long vertical slots. Installed slotted section so that top of slotted section is 2.0' below top of waste.

ENGINEER'S SEAL

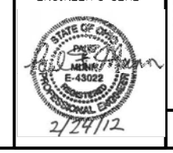

NO.	DATE	BY	DESCRIPTION
1	02/22/2012	SCW	COA REPORT

The Mannik & Smith Group, Inc.
Civil Engineering, Surveying and Environmental Consulting

CLIENT
ENVIROSAFE
ENVIROSAFE SERVICES OF OHIO, INC.

PROJECT
LEACHATE RECOVERY SYSTEM
2011 ENHANCEMENTS AS-BUILT

PASSIVE GAS VENT DETAILS AND SPECIFICATIONS

C05

2/24/2012

S:\Projects\Projects A-E\E1080071\CAD\2011 LRS COA\PLANS\E1080071_05_Q_C05.dgn

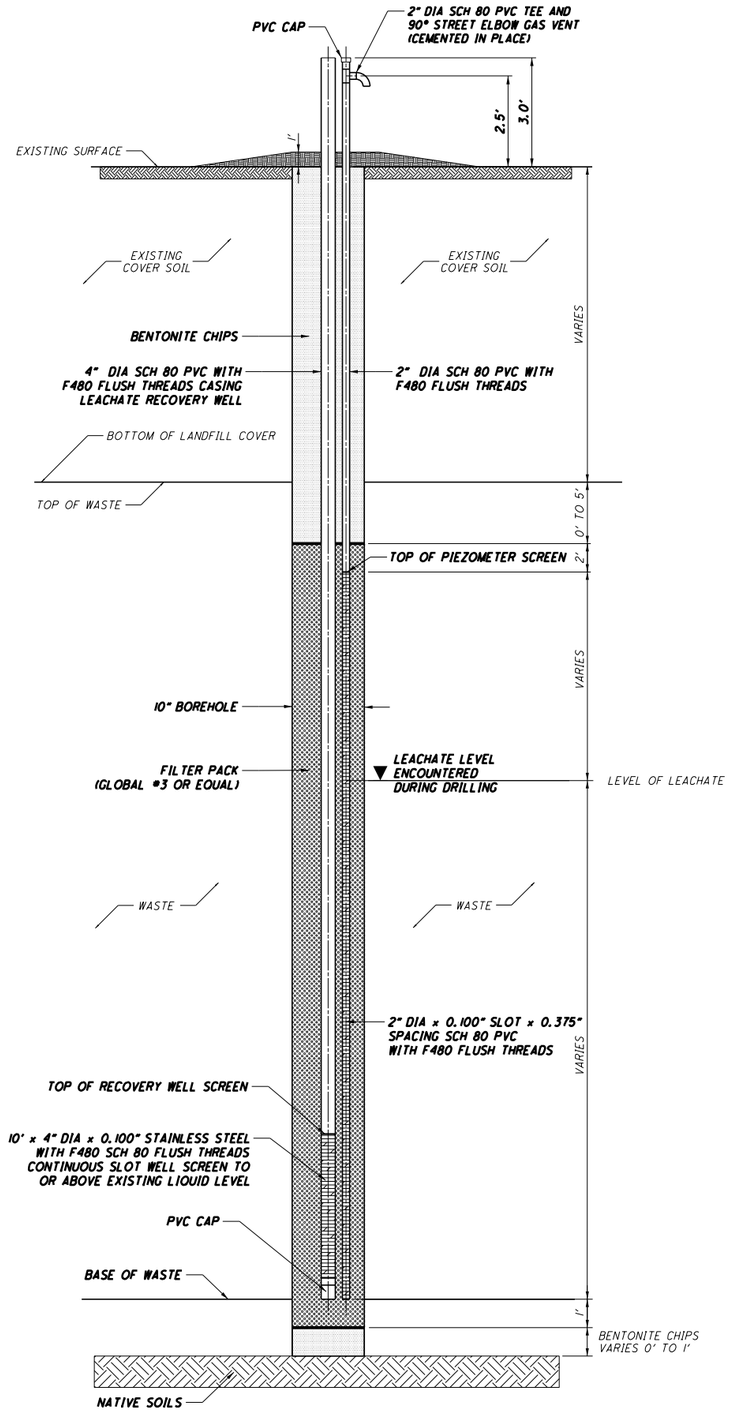

NESTED RECOVERY WELL/PIEZOMETER DETAIL
(Typical Of NRP-24, 25, 26, 27, 28, 29, 30 AND 31)

SCALE: N.T.S.

NESTED RECOVERY WELL/PIEZOMETER SPECIFICATIONS

1. DRILLED AND INSTALLED EIGHT NESTED RECOVERY WELL/PIEZOMETERS (NRP-24, NRP-25, NRP-26, NRP-27, NRP-28, NRP-29, NRP-30, AND NRP-31) AS DEPICTED ON SHEETS C02, C03, C04, AND C06 OF THE LEACHATE RECOVERY SYSTEM 2011 ENHANCEMENTS DESIGN DRAWINGS.
2. UTILIZED SONIC AND MECHANICAL AUGERING FOR DRILLING.
3. OWNER'S ENGINEER PROVIDED A QUALITY CONTROL REPRESENTATIVE THAT WAS PRESENT DURING DRILLING TO OBSERVE AND DOCUMENT THE WORK.
4. COORDINATED ALL PHASES OF THE WORK WITH THE ENGINEER/QUALITY CONTROL REPRESENTATIVE.
5. DRILLED TO WITHIN 10 FEET OF THE ESTIMATED BASE OF WASTE THEN COLLECTED CUTTING SAMPLES FOR INSPECTION AT AS SMALL AS POSSIBLE INTERVALS UNTIL THE BASE OF WASTE WAS LOCATED.
6. AFTER THE BASE OF WASTE WAS LOCATED, THE BOREHOLE WAS BACKFILLED WITH BENTONITE CHIPS TO 1.0 FOOT BELOW THE BASE OF WASTE IF THE BOREHOLE EXTENDED MORE THAN 1.0 FOOT BELOW THE BASE OF WASTE.
7. PLACED GLOBAL #3 SAND OR EQUAL ABOVE THE BENTONITE TO FILL THE BOREHOLE TO THE BASE OF WASTE. (THE FUNCTION OF THE SAND IS TO PREVENT BENTONITE CLOGGING OF THE PIEZOMETER SCREEN.)
8. SET THE SCREENS OF THE 4-INCH RECOVERY WELL AND 2-INCH PIEZOMETER ON THE SAND AT THE BASE OF WASTE.
9. INSTALLED 10 FEET OF 4-INCH RECOVERY WELL SCREEN. DETERMINED AND INSTALLED 2-INCH PIEZOMETER SCREEN LENGTH TO EXTEND FROM BASE OF WASTE TO WITHIN 2 TO 7 FEET OF TOP OF WASTE.
10. INSTALLED FILTER PACK TO 2.0 FEET ABOVE TOP OF PIEZOMETER SCREEN.
11. INSTALLED BENTONITE SEAL ABOVE FILTER PACK TO GROUND SURFACE AS INDICATED IN THE DRAWING. INTRODUCED GRANULAR BENTONITE TO ANNULAR SPACE IN A MANNER THAT ALLOWED EVEN PLACEMENT AROUND RISER. ADDED 1 GALLON OF WATER FOR EVERY 6 INCHES OF EMPLACED SEAL.
12. MOUNDED SOIL AROUND NESTED WELL AS INDICATED ON THE DRAWING TO PROVIDE POSITIVE DRAINAGE.
13. FURNISHED RISER AND SCREEN IN NEW AND GOOD CONDITION, CLEARLY LABELED.
14. FURNISHED GRANULAR BENTONITE AND GRANULAR FILTER MATERIALS IN BAGS FREE OF RIPS OR TEARS.
15. PROTECTED PRODUCTS AND MATERIALS FROM PHYSICAL DAMAGE DURING CONSTRUCTION.
16. INSTALLED BORINGS PLUMB AND STRAIGHT. DEMONSTRATED PLUMBNESS BY LOWERING A 3-INCH DIAMETER 4-FT LONG BALER TO BOTTOMS OF RECOVERY WELLS AND A 1-INCH DIAMETER 4-FT LONG BALER TO BOTTOMS OF PIEZOMETERS. RECOVERY WELLS AND PIEZOMETERS WERE NOT BE OUT OF PLUMB BY MORE THAN ONE RISER DIAMETER. 4-FT LONG BALER MOVED FREELY THROUGHOUT ENTIRE LENGTH OF RISER AND SCREEN.
17. INSTALLED TEE AND STREET 90 DEGREE ELBOW ON PIEZOMETER RISER 2.5 FEET ABOVE EXISTING GRADE. EXTEND RECOVERY WELL RISER AND PIEZOMETER RISER TO 3.0 FEET ABOVE GRADE. PLACED PVC CAP ON PIEZOMETER RISER.
18. COLLECTED DRILL CUTTINGS FOR DISPOSAL. PLACED CUTTINGS IN ROLL-OFF BOX PROVIDED BY OWNER FOR DISPOSAL BY OWNER.
19. TRANSPORTED OR PUMPED LIQUIDS ENCOUNTERED DURING DRILLING TO STORAGE TANKS OR TANK TRUCKS PROVIDED BY OWNER FOR DISPOSAL BY OWNER.
20. DID NOT SPILL LIQUIDS ON THE GROUND.
21. ALL EQUIPMENT, UNUSED MATERIALS, TEMPORARY FACILITIES, DEBRIS, AND MISCELLANEOUS ITEMS RESULTING FROM OR USED IN THE OPERATIONS WERE REMOVED AT EACH DRILLING LOCATION. SITE WAS RESTORED AS CLOSE AS POSSIBLE TO ORIGINAL CONDITION.

AS-BUILT NESTED RECOVERY WELL/PIEZOMETER SCHEDULE

Nested Recovery Well and Piezometer	NRP-24	NRP-25	NRP-26	NRP-27	NRP-28	NRP-29	NRP-30	NRP-31	
Waste Management Unit	5	6	6	6	6	7	7	5	Total Lengths
Northing	11265.35	11685.01	11696.24	11567.65	11548.28	11171.72	11101.76	11528.14	
Easting	10084.54	10964.91	11228.43	10978.00	11183.07	10998.05	10688.96	9835.66	
Grade El. (includes 2' bench for all except NRP-24)	597.34	604.17	598.38	630.90	626.19	607.96	609.60	596.48	
Top of Waste El.	595.34	595.17	594.38	623.90	622.19	603.96	599.60	581.48	
Basal Clay El.	536.35	556.17	547.38	552.90	548.19	562.96	551.60	556.48	
Well & Piezometer Bottom El.	536.34	556.17	547.38	552.90	548.19	562.96	551.60	556.48	
Depth to Basal Clay from Grade (ft)	60.99	48.00	51.00	78.00	78.00	45.00	58.00	40.00	458.99
Depth to Waste from Grade (ft)	2	9	4	7	4	4	10	15	
Waste thickness (ft)	59.0	39.0	47.0	71.0	74.0	41.0	48.0	25.0	
Borehole Dia. (inches)	10	10	10	10	10	10	10	10	
Depth of Filter Pack	58	38	43	79	73	40	48	22	401.0
Filter Pack Mat. (Global #3)	1/8 to 1/4"	1/8 to 1/4"	1/8 to 1/4"	1/8 to 1/4"	1/8 to 1/4"	1/8 to 1/4"	1/8 to 1/4"	1/8 to 1/4"	
Riser El.	600.6	607.8	602.4	634.8	629.2	611.2	613.2	599.5	
Well Depth from Top of Riser (ft)	64.0	51.0	54.0	81.0	81.0	48.0	61.0	43.0	483.0
Riser Length, including stickup[1] (ft) - estimate	54.0	41.0	44.0	71.0	71.0	38.0	51.0	33.0	403.0
Screen Length[2] (ft)	10	10	10	10	10	10	10	10	80
Riser/Screen Dia. (inches)	4	4	4	4	4	4	4	4	
Screen Slot Size[2] (inches)	0.100	0.100	0.100	0.100	0.100	0.100	0.100	0.100	
2-inch Piezometer riser length[3] (ft) - estimate	9	16	14	16	11	13	16	23	114.5
2-inch Piezometer screen length[4] (ft)	55	35	40	65	70	35	45	20	365
Grundfos Pump Model[5]	5SQ-140	5SQ-140	5SQ-140	5SQ-140	5SQ-140	5SQ-140	5SQ-140	5SQ-140	
Minimum Pump Motor Lead Length[5] (ft)	75	75	75	100	100	75	75	75	
Minimum Pump Lifting Cable Length[5] (ft)	74	61	64	91	91	58	71	53	563
Minimum Discharge Hose Length[5] (ft)	62	49	52	79	79	46	59	41	467

1. The well riser materials are 4" Sch 80 PVC F480 flush threaded.
2. The well screens are 4" Standard Construction (W90) 304 stainless steel with F480 Schedule 80 flush threads and 0.100" opening width.
3. The piezometer riser materials are 2" Sch 80 PVC F480 flush threaded.
4. The piezometer screens are 2" Sch 80 PVC F480 flush threaded with 0.100" slots at 3/16" spacing. Install piezometer screens from base of waste to within 2 to 7 feet of top of waste.
5. Pumps and appurtenances were provided and installed by Owner.

ENGINEER'S SEAL

STATE OF OHIO — PAUL W. MANN — E-43022 — REGISTERED PROFESSIONAL ENGINEER

2/24/12

NO.	DATE	BY	DESCRIPTION
1	02/22/2012	SGW	COA REPORT

The Mannik & Smith Group, Inc.
Civil Engineering, Surveying and Environmental Consulting

CLIENT
ENVIROSAFE
ENVIROSAFE SERVICES OF OHIO, INC.

PROJECT
LEACHATE RECOVERY SYSTEM
2011 ENHANCEMENTS AS-BUILT

NESTED WELL DETAILS AND SPECIFICATIONS

C06

2/24/2012

S:\Projects\Projects A-E\E1080071\CAD\2011 LRS CQA\PLANS\E1080071_06_Q_C06.dgn

2/24/2012

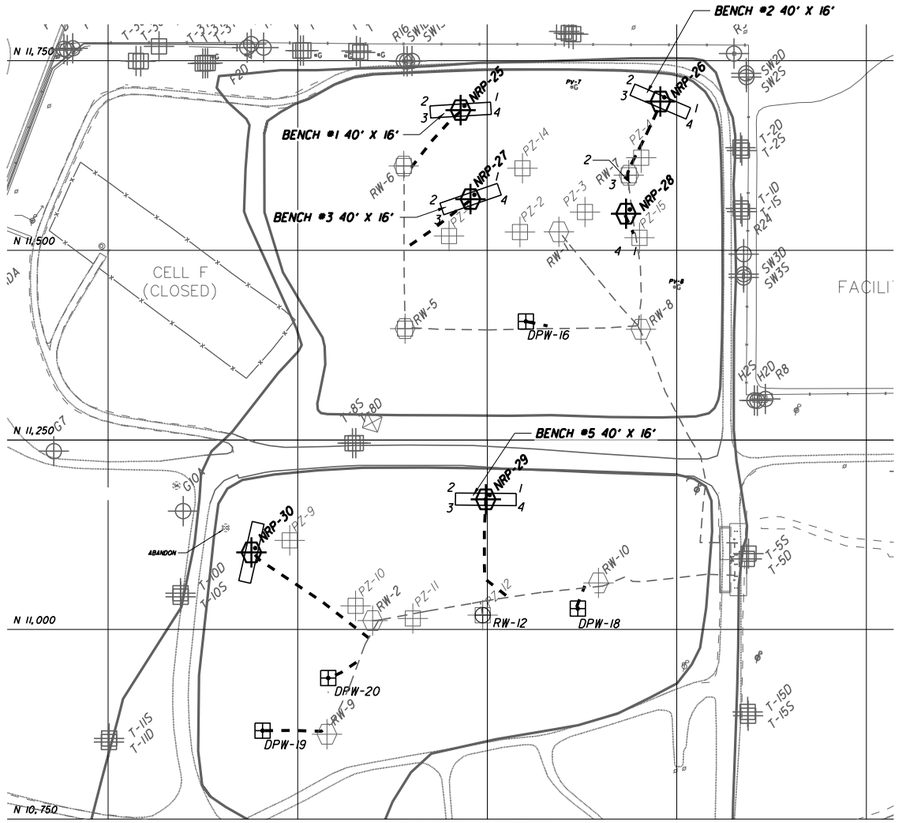

PLAN VIEW

DRILLING BENCHES (SEE SCHEDULE)

GRAPHIC SCALE

0' 50' 100' 200'

APPROXIMATE DRILLING BENCH (80 x 16 FOOT) LOCATIONS, ELEVATIONS, AND FILL QUANTITIES AT TIME OF WELL INSTALLATION																										
BENCH NO.	SWMU NO.	NRP NO.	WELL LOCATION		BENCH CORNER 1			BENCH CORNER 2			BENCH CORNER 3			BENCH CORNER 4			EXISTING CORNER ELEVATIONS				CORNER FILL THICKNESS (FT)				FILL (CY)
			Northing	Easting	Northing	Easting	Elevation	Northing	Easting	Elevation	Northing	Easting	Elevation	Northing	Easting	Elevation	1	2	3	4	1	2	3	4	
1	6	25	11690.0	10965.0	11700.4	11004.4	602.0	11695.5	10924.6	602.0	11679.6	10925.6	603.0	11684.5	11005.4	603.0	599.5	600.0	603.0	603.0	2.5	2.0	0.0	0.0	90
2	6	26	11695.0	11250.0	11686.7	11289.9	595.0	11718.0	11216.3	597.0	11703.3	11210.1	598.0	11672.0	11283.7	596.0	593.0	593.0	596.0	595.5	2.0	4.0	2.0	0.5	187
3	6	27	11570.0	10975.0	11590.6	11010.2	629.0	11564.5	10934.6	629.0	11549.4	10939.8	630.0	11575.5	11015.4	630.0	626.0	626.5	630.0	630.0	3.0	2.5	0.0	0.0	119
~~4~~	~~6~~	~~28~~	~~11550.0~~	~~11175.0~~	~~11510.7~~	~~11185.8~~	~~628.8~~	~~11590.5~~	~~11180.2~~	~~626.8~~	~~11589.3~~	~~11164.2~~	~~627.8~~	~~11509.5~~	~~11169.8~~	~~629.8~~	~~626.0~~	~~626.0~~	~~627.5~~	~~629.8~~	~~2.8~~	~~0.8~~	~~0.3~~	~~0.0~~	~~77~~
5	7	29	11180.0	11015.0	11187.7	11055.1	607.0	11188.3	10975.1	606.5	11172.3	10974.9	608.0	11171.7	11054.9	607.5	604.0	603.0	608.0	607.5	3.0	3.5	0.0	0.0	153
6	7	30	11108.0	10682.0	11148.7	10684.5	607.8	11071.4	10664.0	606.8	11067.3	10679.5	606.8	11144.6	10700.0	607.8	607.8	604.3	604.5	607.8	0.0	2.5	2.3	0.0	98
NOTE: BENCH #4 WAS NOT INSTALLED.																						TOTAL FILL (CY):				723

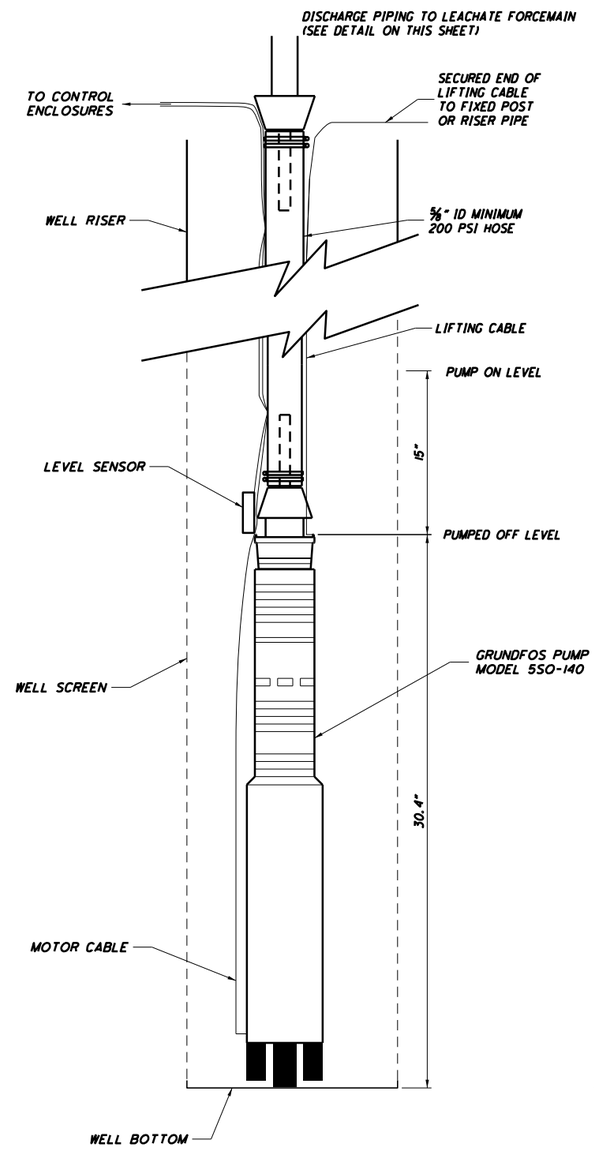

GRUNDFOS PUMP INSTALLATION DETAILS
N.T.S.

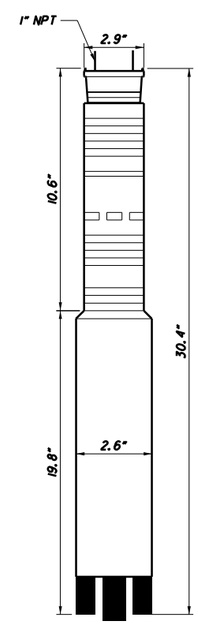

DIMENSIONS OF
GRUNDFOS PUMP
MODEL 5SQ-140
N.T.S.

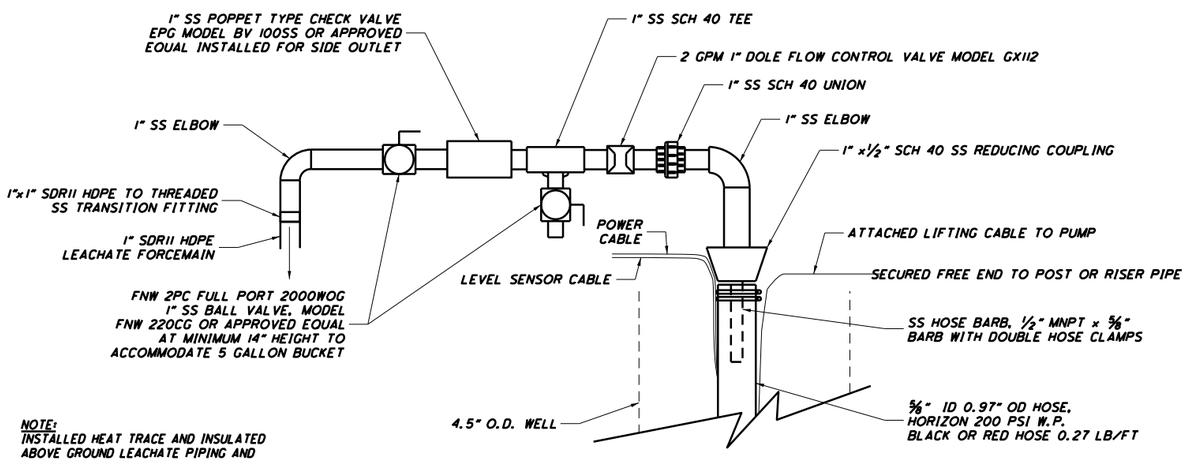

NOTE:
INSTALLED HEAT TRACE AND INSULATED ABOVE GROUND LEACHATE PIPING AND FITTINGS. INSTALL 5 WATTS/FT NEC COMPLIANT SELF-REGULATING HEAT TAPE AND 1" PLASTIC CLAD FIBERGLASS INSULATION.

DISCHARGE PIPING TO LEACHATE FORCEMAIN
FOR 4.5" O.D. WELL
DETAIL

ENGINEER'S SEAL

STATE OF OHIO
MICHAEL G. WEIRICH
E-43022
REGISTERED
PROFESSIONAL ENGINEER
2/24/12

NO.	DATE	BY	DESCRIPTION
1	02/22/2012	SGW	COA REPORT

The Mannik & Smith Group, Inc.
Civil Engineering, Surveying and Environmental Consulting

CLIENT
ENVIROSAFE
ENVIROSAFE SERVICES OF OHIO, INC.

PROJECT
LEACHATE RECOVERY SYSTEM
2011 ENHANCEMENTS AS-BUILT

DRILLING BENCHES AND
PIPE AND PUMP DETAILS

C07

S:\Projects\Projects A-E\E108007\CAD\2011 LRS CQA\PLANS\E108007I_07_Q_C07.dgn

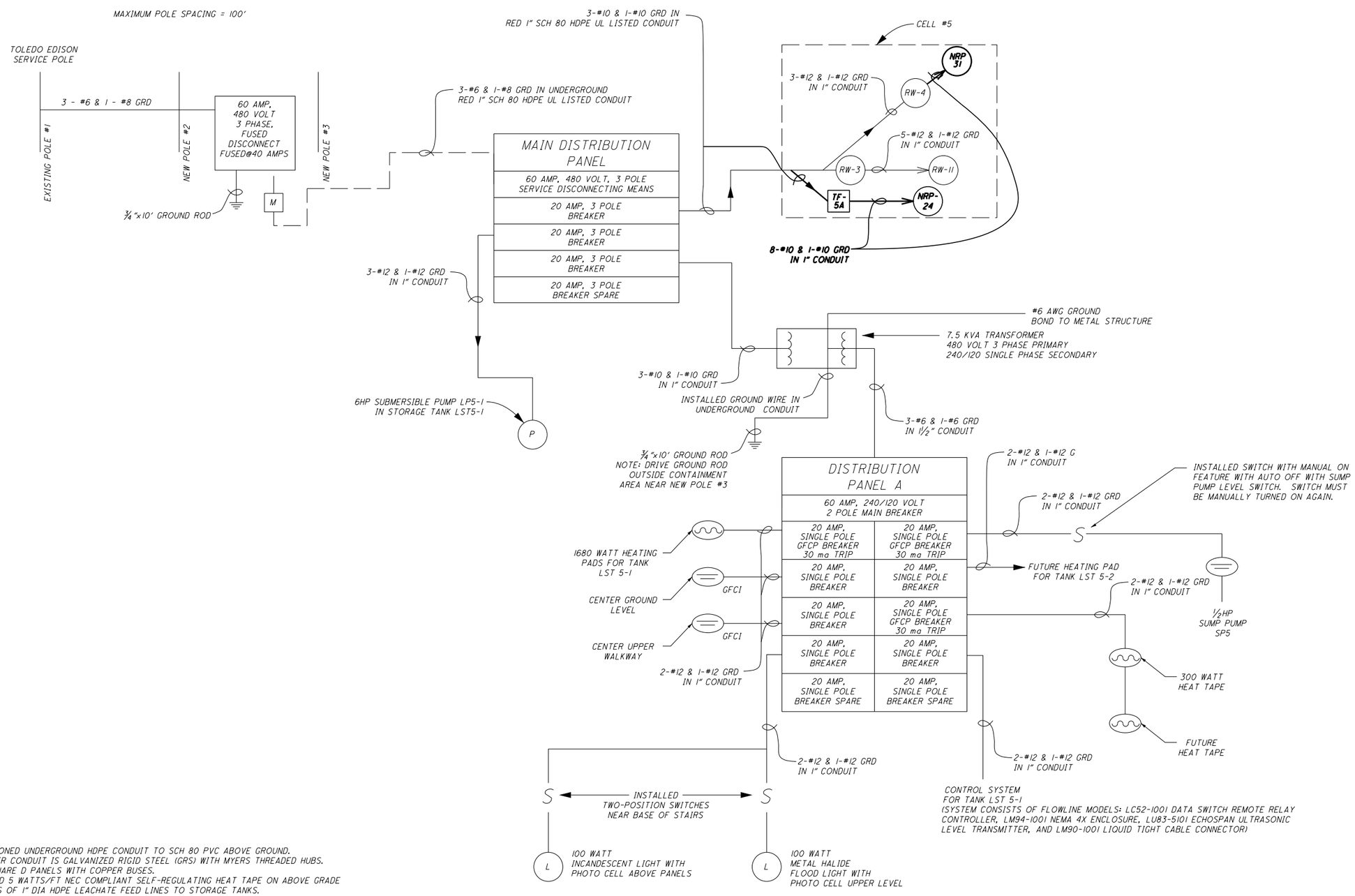

ELECTRICAL LINE DIAGRAM

WMU #5

NOTES

1. TRANSITIONED UNDERGROUND HDPE CONDUIT TO SCH 80 PVC ABOVE GROUND.
2. ALL OTHER CONDUIT IS GALVANIZED RIGID STEEL (GRS) WITH MYERS THREADED HUBS.
3. USED SQUARE D PANELS WITH COPPER BUSES.
4. INSTALLED 5 WATTS/FT NEC COMPLIANT SELF-REGULATING HEAT TAPE ON ABOVE GRADE PORTIONS OF 1" DIA HDPE LEACHATE FEED LINES TO STORAGE TANKS.
5. **ALL ELECTRICAL SYSTEMS AT EACH RECOVERY WELL ARE GROUNDED AND BONDED TOGETHER PER APPLICABLE CODES.**
6. **THE EXISTING BLACKHAWK PUMP CONTROL PANELS AT RW-3 AND RW-4 EACH CONTAIN A 5 KVA 480 VAC PRIMARY, 240/120 VAC 1-PHASE SECONDARY TRANSFORMER AS DEPICTED ON SHEET E04.**
7. **EXISTING 5 KVA TRANSFORMER AT RW-3 SUPPLIES 120 VAC POWER TO EXISTING RW-11.**
8. **TAPPED INTO THE EXISTING 480 VAC CONDUIT WEST OF NRP-24 AND INSTALLED NEW 5 KVA 480 VAC PRIMARY, 240/120 VAC 1-PHASE SECONDARY TRANSFORMER TF-5A AT NRP-24 TO PROVIDE 120 VAC SINGLE PHASE POWER TO NRP-24.**
9. **SEE SHEET E03 FOR ELECTRICAL PLAN VIEW.**
10. **PROVIDED 120VAC POWER TO NEW NRP-31 FROM EXISTING 5KVA TRANSFORMER AT RW-4.**

ENGINEER'S SEAL

STATE OF OHIO — PAUL E. MANN — E-43022 — REGISTERED PROFESSIONAL ENGINEER

2/24/12

NO.	DATE	BY	DESCRIPTION
1	02/22/2012	SGW	COA REPORT

The Mannik & Smith Group, Inc.
Civil Engineering, Surveying and Environmental Consulting

CLIENT
ENVIROSAFE
ENVIROSAFE SERVICES OF OHIO, INC.

PROJECT
LEACHATE RECOVERY SYSTEM
2011 ENHANCEMENTS AS-BUILT

WMU 5 ELECTRICAL LINE DIAGRAM

E01

2/24/2012

S:\Projects\Projects A-E\E108007\CAD\2011 LRS COA\PLANS\E108007L_08_Q_E01.dgn

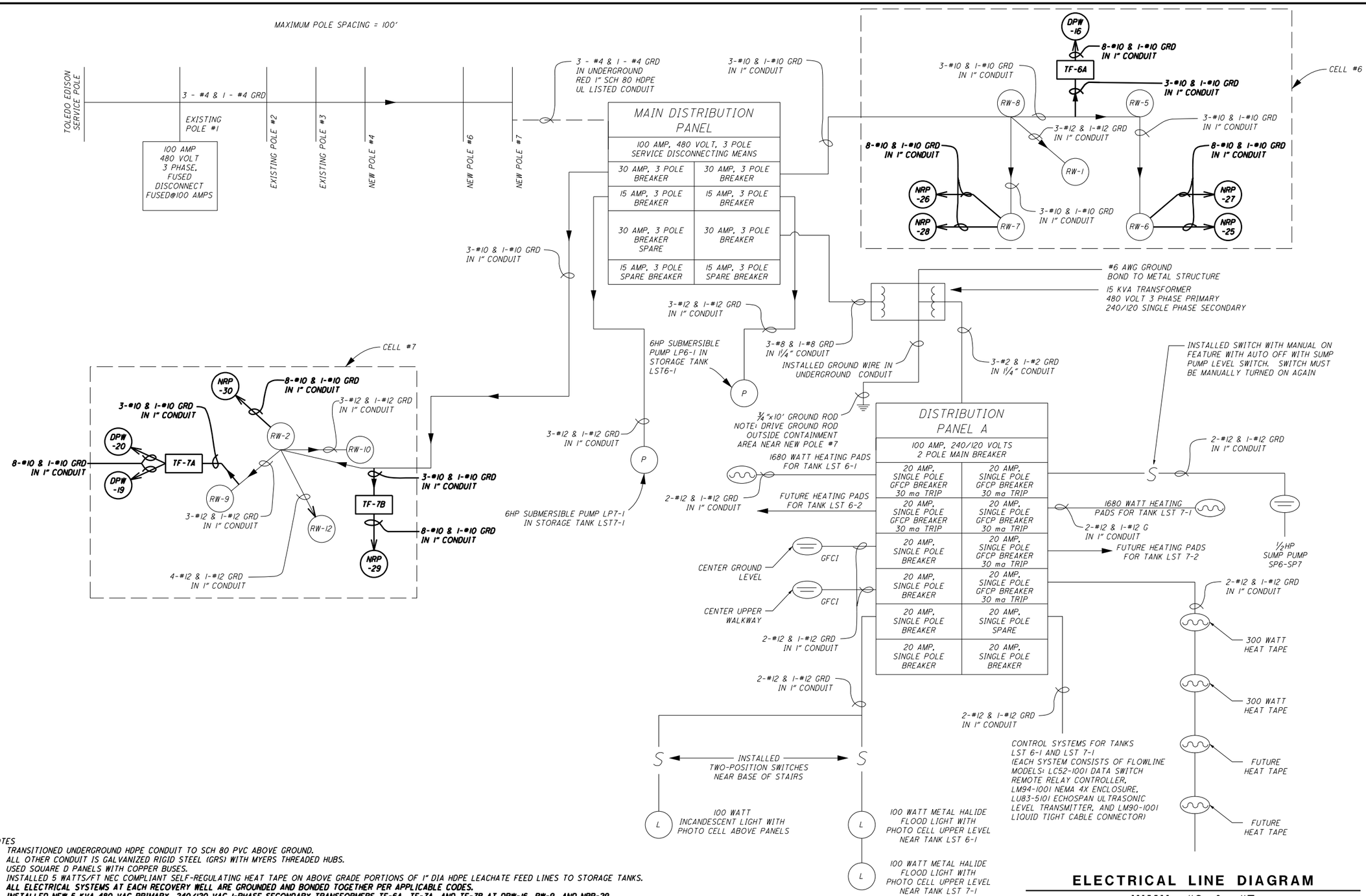

ELECTRICAL LINE DIAGRAM

WMU #6 & #7

NOTES

1. TRANSITIONED UNDERGROUND HDPE CONDUIT TO SCH 80 PVC ABOVE GROUND.
2. ALL OTHER CONDUIT IS GALVANIZED RIGID STEEL (GRS) WITH MYERS THREADED HUBS.
3. USED SQUARE D PANELS WITH COPPER BUSES.
4. INSTALLED 5 WATTS/FT NEC COMPLIANT SELF-REGULATING HEAT TAPE ON ABOVE GRADE PORTIONS OF 1" DIA HDPE LEACHATE FEED LINES TO STORAGE TANKS.
5. ALL ELECTRICAL SYSTEMS AT EACH RECOVERY WELL ARE GROUNDED AND BONDED TOGETHER PER APPLICABLE CODES.
6. INSTALLED NEW 5 KVA 480 VAC PRIMARY, 240/120 VAC 1-PHASE SECONDARY TRANSFORMERS TF-6A, TF-7A, AND TF-7B AT DPW-16, RW-9, AND NRP-29.
7. THE EXISTING BLACKHAWK PUMP CONTROL PANELS AT RW-1, RW-2, RW-5, RW-6, RW-7, RW-8, RW-9, AND RW-10 EACH CONTAIN A 5 KVA 480 VAC PRIMARY, 240/120 VAC 1-PHASE SECONDARY TRANSFORMER AS DEPICTED ON SHEET E03.
8. SUPPLIED 120 VAC POWER FROM EXISTING 5 KVA TRANSFORMER AT RW-6 TO NRP-25 AND NRP-27.
9. SUPPLIED 120 VAC POWER FROM EXISTING 5 KVA TRANSFORMER AT RW-7 TO NRP-26 AND NRP-28.
10. TAPPED INTO THE EXISTING 480 VAC CONDUIT SOUTH OF DPW-16 AND INSTALLED NEW 5 KVA TRANSFORMER TF-6A AT DPW-16, PROVIDED 120 VAC SINGLE PHASE POWER TO DPW-16 FROM TRANSFORMER TF-6A.
11. SUPPLIED 120 VAC POWER FROM EXISTING 5 KVA TRANSFORMER AT RW-10 TO DPW-18.
12. SUPPLIED 120 VAC POWER FROM EXISTING 5 KVA TRANSFORMER AT RW-2 TO NRP-30.
13. INSTALLED NEW 5 KVA TRANSFORMER TF-7A AT RW-9. PROVIDED 120 VAC SINGLE PHASE POWER TO DPW-19 AND DPW-20 FROM TRANSFORMER TF-7A.
14. TAPPED INTO THE EXISTING 480 VAC CONDUIT NORTH OF RW-12 AND INSTALLED NEW 5 KVA TRANSFORMER TF-7B AT NRP-29. PROVIDED 120 VAC SINGLE PHASE POWER TO NRP-29 FROM TRANSFORMER TF-7B.
15. SEE SHEET E03 FOR ELECTRICAL PLAN VIEW.

ENGINEER'S SEAL

STATE OF OHIO — PAUL E. MERRIN — E-43022 — REGISTERED PROFESSIONAL ENGINEER — 2/29/12

NO.	DATE	BY	DESCRIPTION
1	02/22/2012	SGW	CQA REPORT

The Mannik & Smith Group, Inc.
Civil Engineering, Surveying and Environmental Consulting

CLIENT: ENVIROSAFE — ENVIROSAFE SERVICES OF OHIO, INC.

PROJECT: LEACHATE RECOVERY SYSTEM 2011 ENHANCEMENTS AS-BUILT

WMU 6 & 7 ELECTRICAL LINE DIAGRAM

E02

2/24/2012

S:\Projects\Projects A-E\E080071\CAD\2011 LRS CQA\PLANS\E080071_09_Q_E02.dgn

2/24/2012

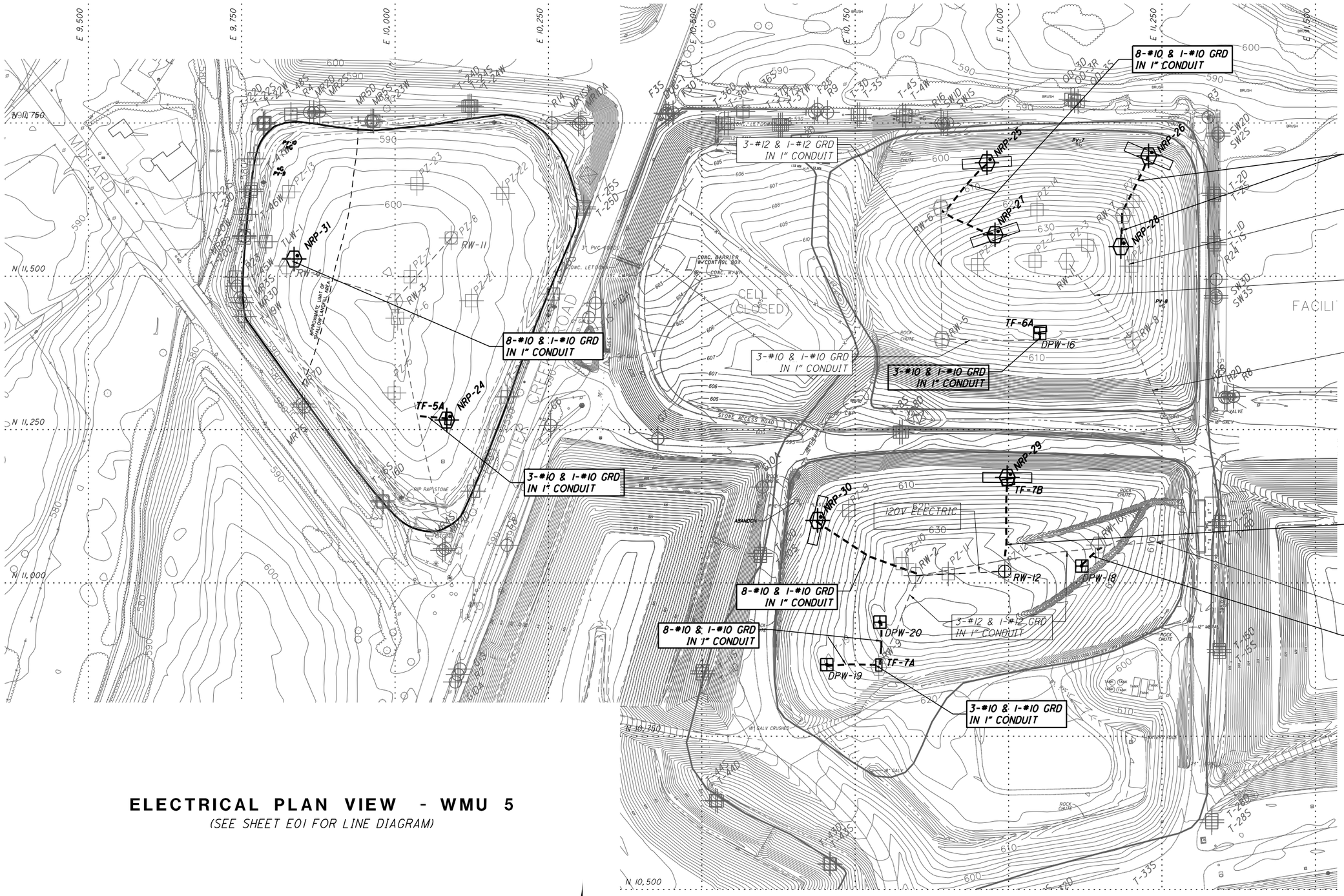

ELECTRICAL PLAN VIEW - WMU 5

(SEE SHEET E01 FOR LINE DIAGRAM)

ELECTRICAL PLAN VIEW - WMU 6 & 7

(SEE SHEET E02 FOR LINE DIAGRAM)

GRAPHIC SCALE

0' 40' 80' 160'

NO.	DATE	BY	DESCRIPTION
1	02/22/2012	SGW	COA REPORT

The Mannik & Smith Group, Inc.
Civil Engineering, Surveying and Environmental Consulting

CLIENT
ENVIROSAFE
ENVIROSAFE SERVICES OF OHIO, INC.

PROJECT
LEACHATE RECOVERY SYSTEM
2011 ENHANCEMENTS AS-BUILT

WMU 5, 6 & 7
ELECTRICAL PLAN VIEW

ENGINEER'S SEAL
STATE OF OHIO
PAUL E. MANN
E-43022
REGISTERED
PROFESSIONAL ENGINEER
2/24/12

E03

S:\Projects\Projects A-E\E1080071\CAD\2011 LRS COA\PLANS\E1080071_10_0_E03.dgn

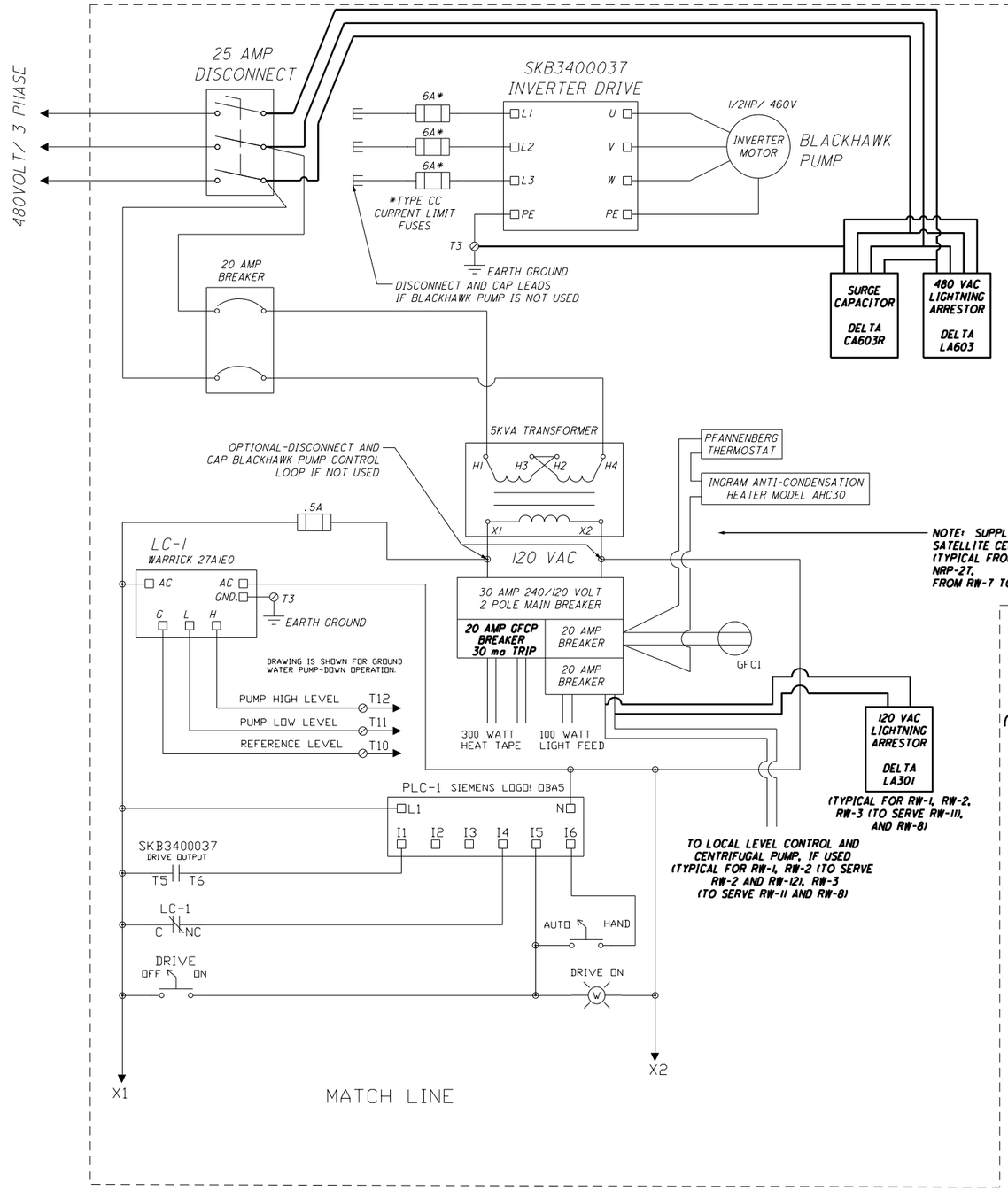

NOTE: SUPPLIED 120 VAC POWER FROM EXISITING TRANSFORMER TO SATELLITE CENTRIFUGAL PUMP(S). (TYPICAL FROM RW-2 TO NRP-30, FROM RW-4 TO NRP-31, FROM RW-6 TO NRP-25 AND NRP-27, FROM RW-7 TO NRP-26 AND NRP-28, AND FROM RW-10 TO DPW-18)

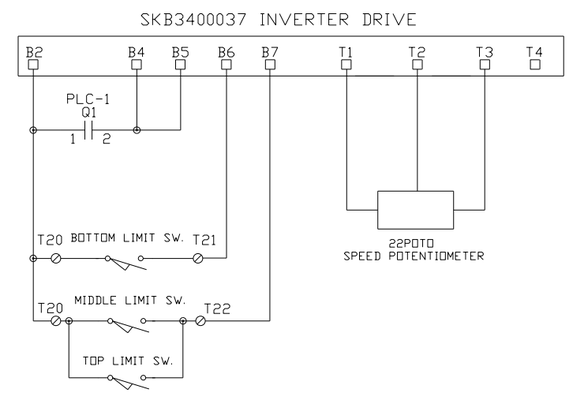

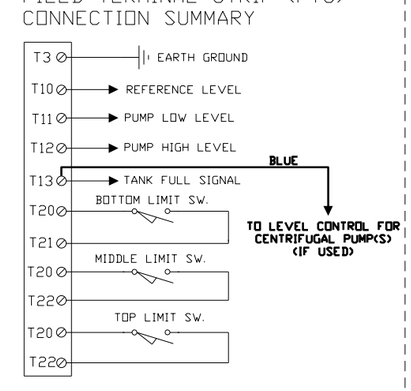

BLACKHAWK PUMP LIMIT SWITCH WIRING MUST BE ISOLATED FROM ALL OTHER CONTROL AND POWER WIRING. A SEPARATE CONDUIT IS REQUIRED. WIRE NEEDS TO BE SHIELDED CABLE GROUNDED AT TERMINAL T3 IN PANEL ONLY. REFER TO DRIVE MANUAL FOR INSTRUCTIONS.

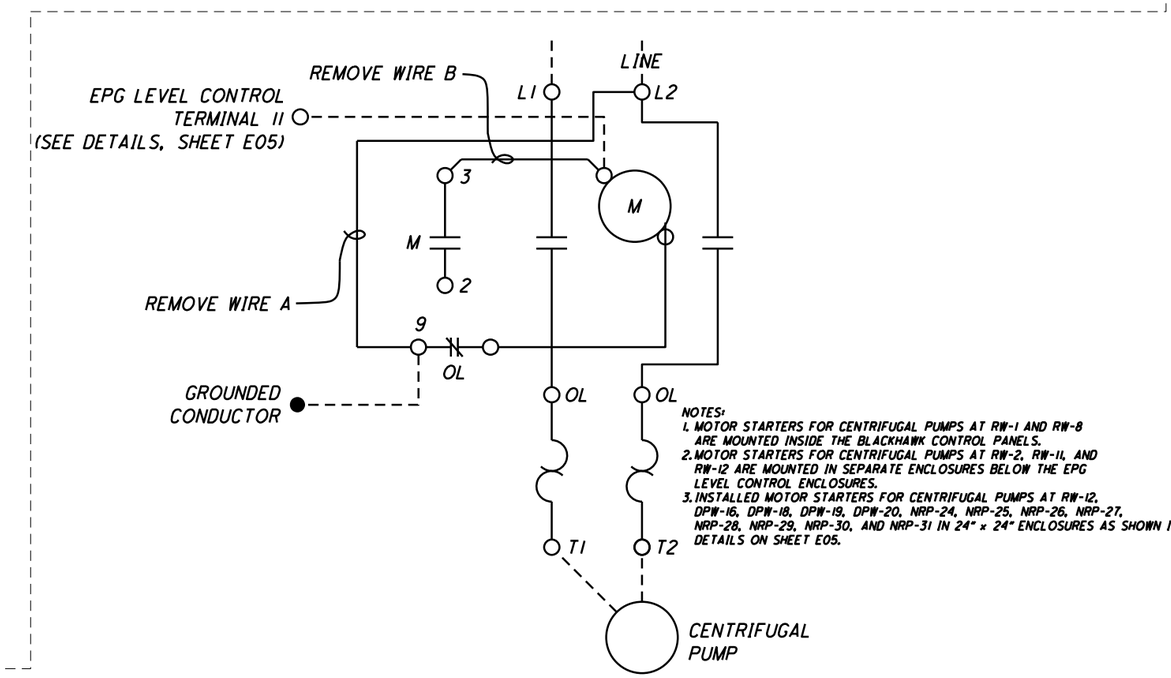

NOTES:
1. MOTOR STARTERS FOR CENTRIFUGAL PUMPS AT RW-1 AND RW-8 ARE MOUNTED INSIDE THE BLACKHAWK CONTROL PANELS.
2. MOTOR STARTERS FOR CENTRIFUGAL PUMPS AT RW-2, RW-11, AND RW-12 ARE MOUNTED IN SEPARATE ENCLOSURES BELOW THE EPG LEVEL CONTROL ENCLOSURES.
3. INSTALLED MOTOR STARTERS FOR CENTRIFUGAL PUMPS AT RW-12, DPW-16, DPW-18, DPW-19, DPW-20, NRP-24, NRP-25, NRP-26, NRP-27, NRP-28, NRP-29, NRP-30, AND NRP-31 IN 24" x 24" ENCLOSURES AS SHOWN IN DETAILS ON SHEET E05.

PUMP CONTROL PANEL
(TYPICAL FOR RW-1 THROUGH RW-10)

WIRING SCHEMATIC FOR CENTRIFUGAL PUMP MAGNETIC STARTER, GE MODEL CR306J002
(TYPICAL)

DETAIL OF ELECTRICAL SERVICE TO TYPICAL RECOVERY WELL

ENGINEER'S SEAL

STATE OF OHIO — PAUL E. MANN — E-43022 — REGISTERED PROFESSIONAL ENGINEER

2/24/12

NO.	DATE	BY	DESCRIPTION
1	02/22/2012	SGW	COA REPORT

The Mannik & Smith Group, Inc.
Civil Engineering, Surveying and Environmental Consulting

CLIENT: ENVIROSAFE — ENVIROSAFE SERVICES OF OHIO, INC.

PROJECT: LEACHATE RECOVERY SYSTEM 2011 ENHANCEMENTS AS-BUILT

RECOVERY WELL ELECTRICAL DIAGRAM

E04

2/24/2012

S:\Projects\Projects A-E\E108007\CAD\2011 LRS CQA\PLANS\E108007L_11_Q_E04.dgn

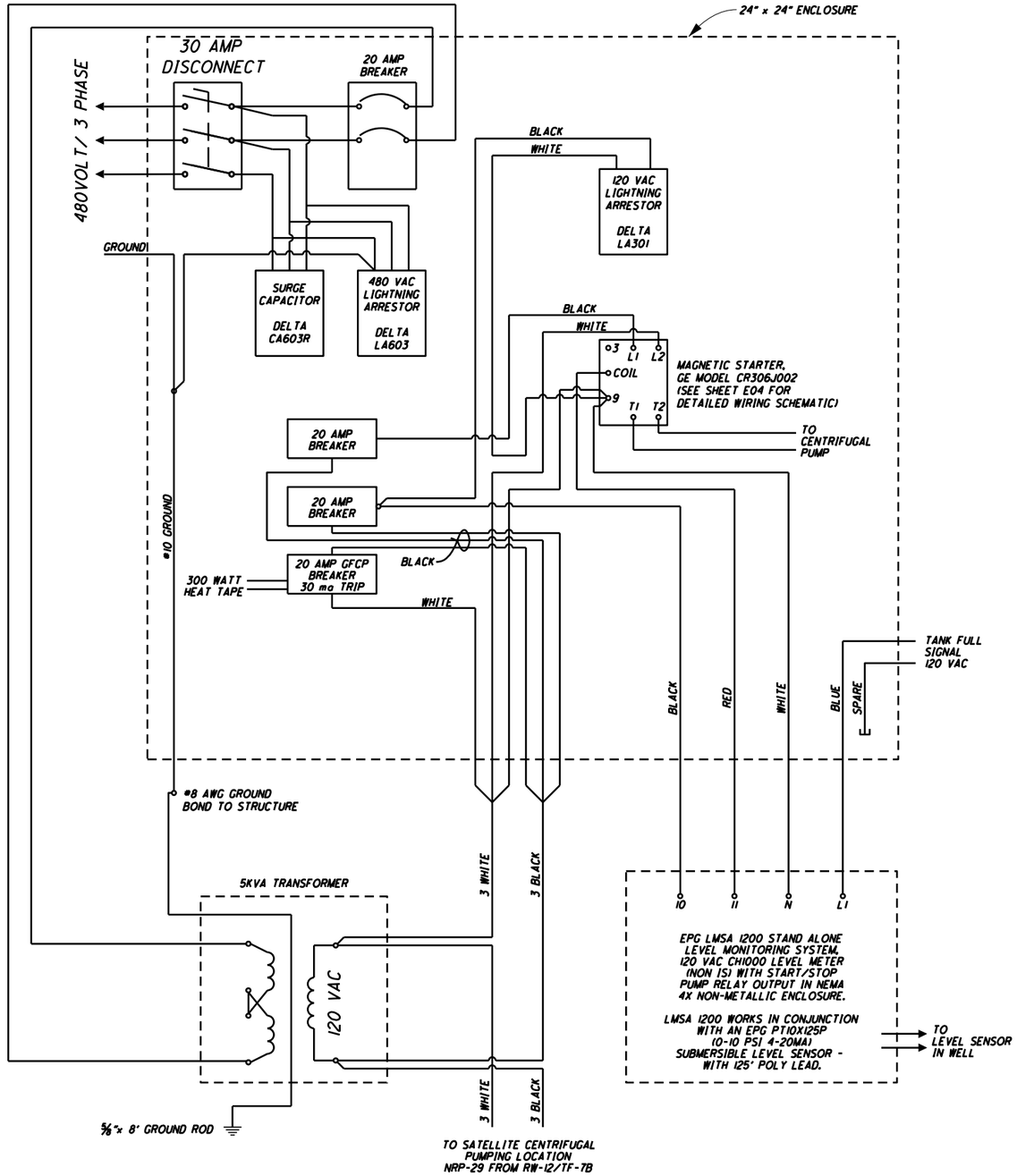

480 VAC ELECTRICAL SERVICE DETAIL
(TYPICAL FOR DPW-16, NRP-24, AND NRP-29)

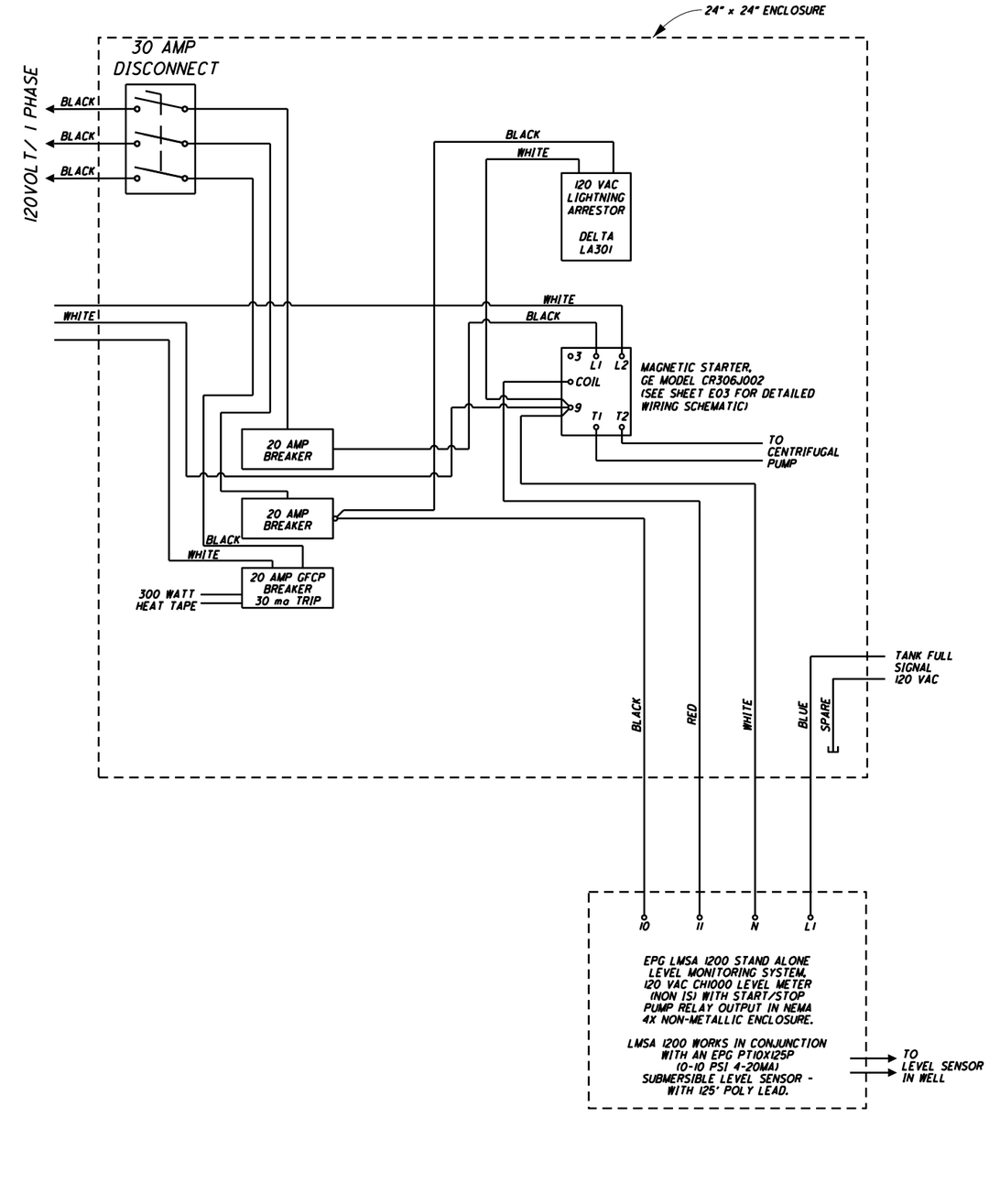

120 VAC ELECTRICAL SERVICE DETAIL
(TYPICAL FOR DPW-18, DPW-19, DPW-20, NRP-25, NRP-26, NRP-27, NRP-28, NRP-30, AND NRP-31)

ENGINEER'S SEAL

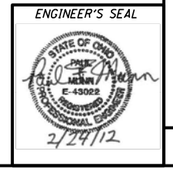

NO.	DATE	BY	DESCRIPTION
1	02/22/2012	SGW	COA REPORT

The Mannik & Smith Group, Inc.
Civil Engineering, Surveying and Environmental Consulting

CLIENT
ENVIROSAFE
ENVIROSAFE SERVICES OF OHIO, INC.

PROJECT
LEACHATE RECOVERY SYSTEM
2011 ENHANCEMENTS AS-BUILT

ELECTRICAL ENCLOSURE DETAILS

E05

2/24/2012

S:\Projects\Projects A-E\E108071\CAD\2011 LRS COA\PLANS\E108071_12_O_E05.dgn

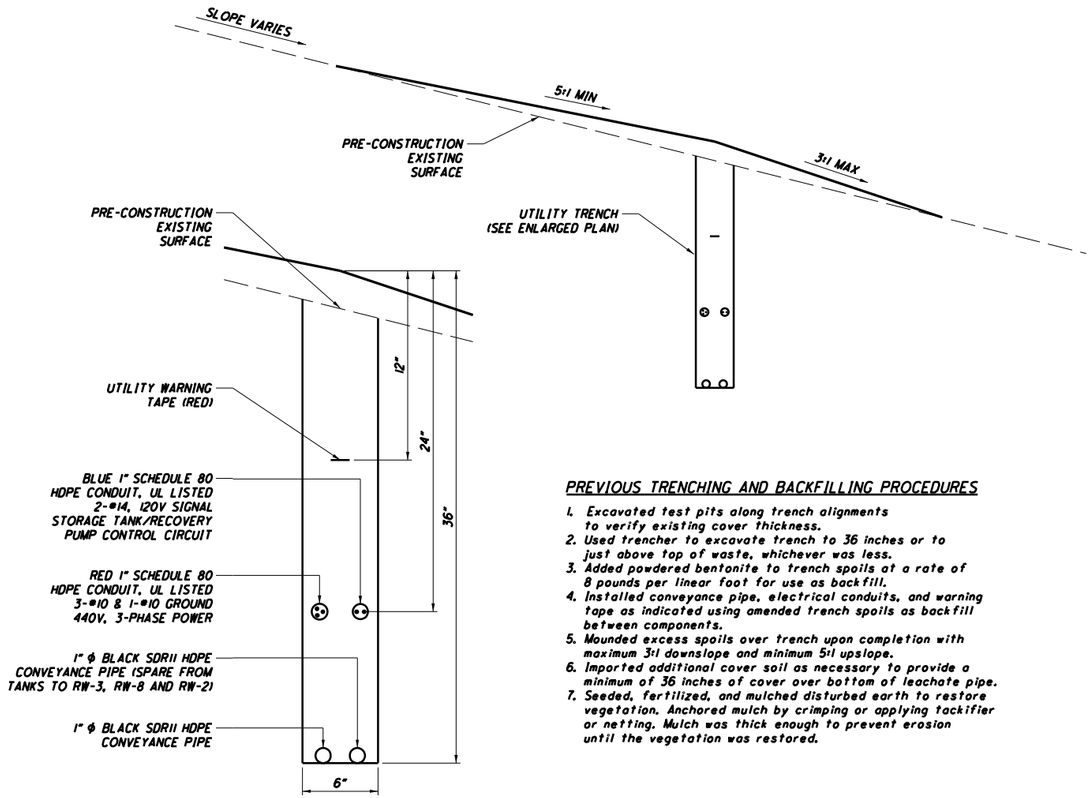

TYPICAL 480 VAC UTILITY TRENCH AND PROPOSED TRENCHES TO TF-5A/NRP-24, TF-6A/DPW-16, TF-7A/RW-9, AND TF-7B/RW-12

EXISTING TRENCHES TO RW-1 THROUGH RW-10.

INSTALLED PROPOSED TRENCHES TO TF-5A/NRP-24, TF-6A/DPW-16, TF-7A/RW-9, AND TF-7B/RW-29 IN SIMILAR MANNER EXCEPT USED PVC ELECTRICAL CONDUIT MARKED WITH RED OR BLUE COLORED TAPE INSTEAD OF RED AND BLUE HDPE CONDUIT.

PREVIOUS TRENCHING AND BACKFILLING PROCEDURES

1. Excavated test pits along trench alignments to verify existing cover thickness.
2. Used trencher to excavate trench to 36 inches or to just above top of waste, whichever was less.
3. Added powdered bentonite to trench spoils at a rate of 8 pounds per linear foot for use as backfill.
4. Installed conveyance pipe, electrical conduits, and warning tape as indicated using amended trench spoils as backfill between components.
5. Mounded excess spoils over trench upon completion with maximum 3:1 downslope and minimum 5:1 upslope.
6. Imported additional cover soil as necessary to provide a minimum of 36 inches of cover over bottom of leachate pipe.
7. Seeded, fertilized, and mulched disturbed earth to restore vegetation. Anchored mulch by crimping or applying tackifier or netting. Mulch was thick enough to prevent erosion until the vegetation was restored.

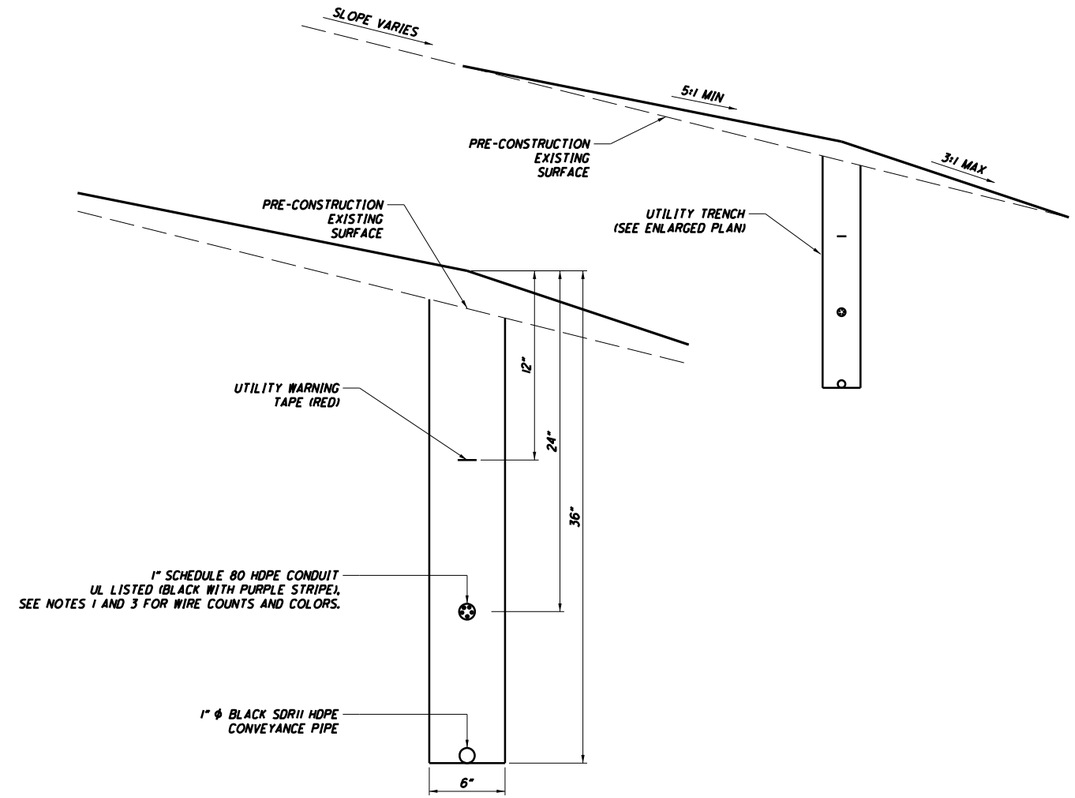

TYPICAL 120 VAC UTILITY TRENCH

EXISTING TRENCH TO RW-11 AND PROPOSED TRENCHES TO DPW-18, DPW-19, DPW-20, NRP-25, NRP-26, NRP-27, NRP-28, NRP-29, AND NRP-30

NOTES:

1. PROVIDED WIRING FOR 120 VAC, 1-PHASE CIRCUITS TO RW-11 FROM RW-3 FOR LEVEL CONTROL, PUMP, AND HEAT TAPE. THE CONDUIT CONTAINS 5-#12 WIRES AND 1-#12 GROUND.
2. **FOLLOWED PREVIOUS TRENCHING AND BACKFILLING PROCEDURE ITEMS 2 THROUGH 7. ITEM 1 TEST PITS NOT REQUIRED.**
3. **INSTALLED TRENCHES TO DPW-18, DPW-19, DPW-20, NRP-25, NRP-26, NRP-27, NRP-28, NRP-29, AND NRP-30. INSTALLED 3-BLACK #10, 3-WHITE #10, AND 2-BLUE #10 WIRES AND 1-#10 GROUND IN THE CONDUIT. USED PVC ELECTRICAL CONDUIT MARKED WITH RED COLORED TAPE INSTEAD OF RED HDPE CONDUIT. IN SOME CASES THE CONDUIT AND CONVEYANCE PIPE WERE INSTALLED ON SEPARATE ALIGNMENTS AS DEPICTED ON SHEETS C02, C03, C04, E03 AND 101.**

WMU #5 NOTES:

PROVIDED A SEPARATE 1" CONDUIT WITH 2-#14 CONDUCTORS FROM THE STORAGE TANK CONTROL PANEL TO RW-3 AND FROM THIS POINT TO RW-4. TERMINATED THESE CIRCUITS IN THE ENCLOSURE AT EACH RECOVERY WELL. CONNECTED 2-#14 (120 VOLT) CONTROL CIRCUIT TO HIGH LEVEL CONTROL ON STORAGE TANK TO SHUT OFF ALL RECOVERY WELL PUMPS CONNECTED TO THAT STORAGE TANK.

WMU #6 NOTES:

PROVIDED A SEPARATE 1" CONDUIT WITH 2-#14 CONDUCTORS FROM THE STORAGE TANK CONTROL PANEL TO RW-4 AND FROM THIS POINT A LOOP TO RW-5, RW-6 AND RW-7 AND BACK TO RW-4. ALSO PROVIDED A SEPARATE 1" CONDUIT WITH 2-#14 CONDUCTORS FROM RW-4. TERMINATED THESE CIRCUITS IN ENCLOSURES AT EACH RECOVERY WELL. CONNECTED 2-#14 (120 VOLT) CONTROL CIRCUIT TO HIGH LEVEL CONTROL ON STORAGE TANK TO SHUT OFF ALL RECOVERY WELL PUMPS CONNECTED TO THAT STORAGE TANK.

WMU #7 NOTES:

PROVIDED A SEPARATE 1" CONDUIT WITH 2-#14 CONDUCTORS FROM THE STORAGE TANK CONTROL PANEL TO RW-2 AND FROM THIS POINT TO RW-9 AND RW-10. TERMINATED THESE CIRCUITS IN THE ENCLOSURE AT EACH RECOVERY WELL. CONNECTED 2-#14 (120 VOLT) CONTROL CIRCUIT TO HIGH LEVEL CONTROL ON STORAGE TANK TO SHUT OFF ALL RECOVERY WELL PUMPS CONNECTED TO THAT STORAGE TANK.

SPARE CONVEYANCE PIPE NOTES:

INSTALLED SPARE CONVEYANCE PIPE ONLY BETWEEN THE FIRST RECOVERY WELL ON EACH WASTE MANAGEMENT UNIT AND THE RESPECTIVE CONTAINMENT AREA. STUBED SPARE PIPE UP APPROX. 1' ABOVE FINISH GRADE AND CAPPED AT EACH END.

ENGINEER'S SEAL

STATE OF OHIO — PAUL E. MERRY — E-43022 — REGISTERED PROFESSIONAL ENGINEER

2/24/12

NO.	DATE	BY	DESCRIPTION
1	02/22/2012	SGW	COA REPORT

The Mannik & Smith Group, Inc.
Civil Engineering, Surveying and Environmental Consulting

CLIENT: ENVIROSAFE
ENVIROSAFE SERVICES OF OHIO, INC.

PROJECT: LEACHATE RECOVERY SYSTEM 2011 ENHANCEMENTS AS-BUILT

TYPICAL TRENCH DETAILS

M01

2/24/2012

S:\Projects\Projects A-E\E1080071\CAD\2011 LRS CQA\PLANS\E1080071_13_Q_M01.dgn

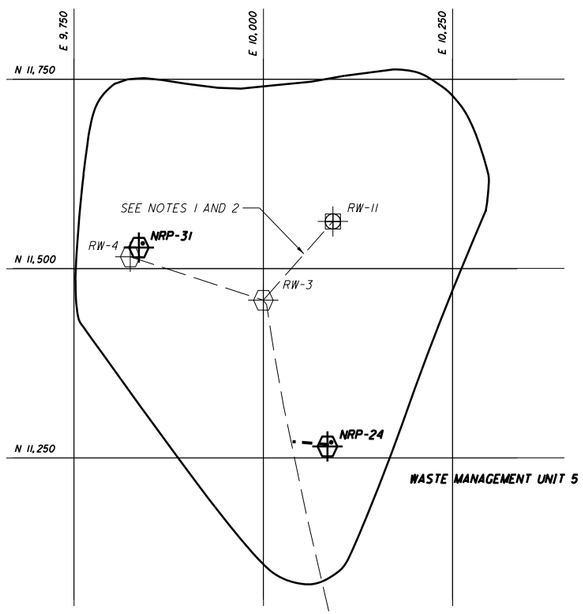

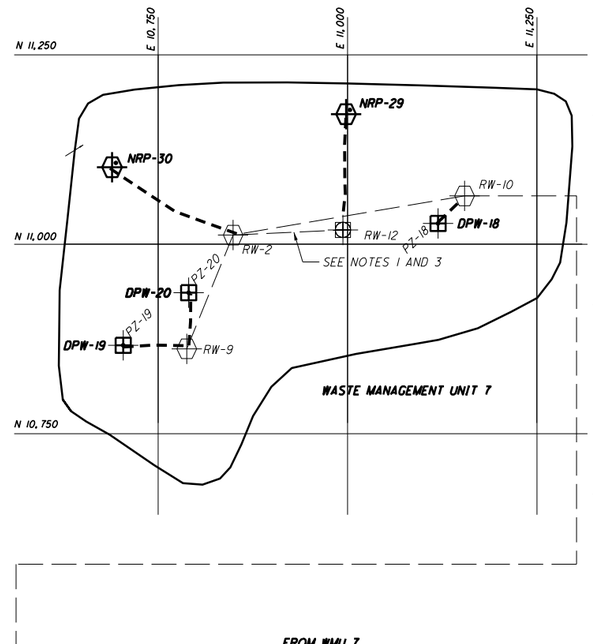

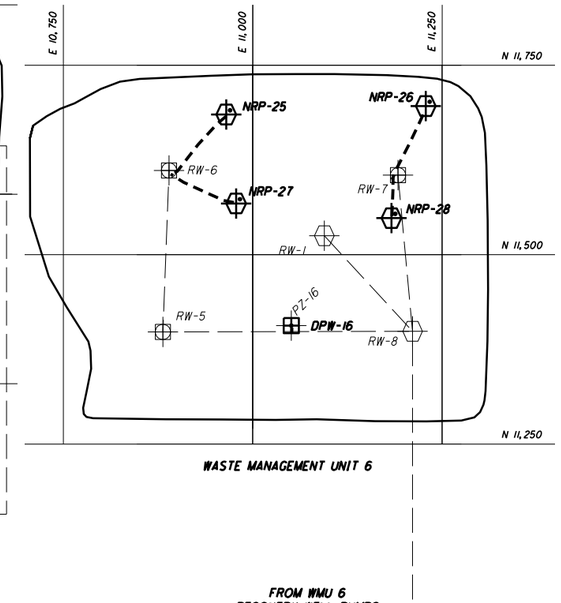

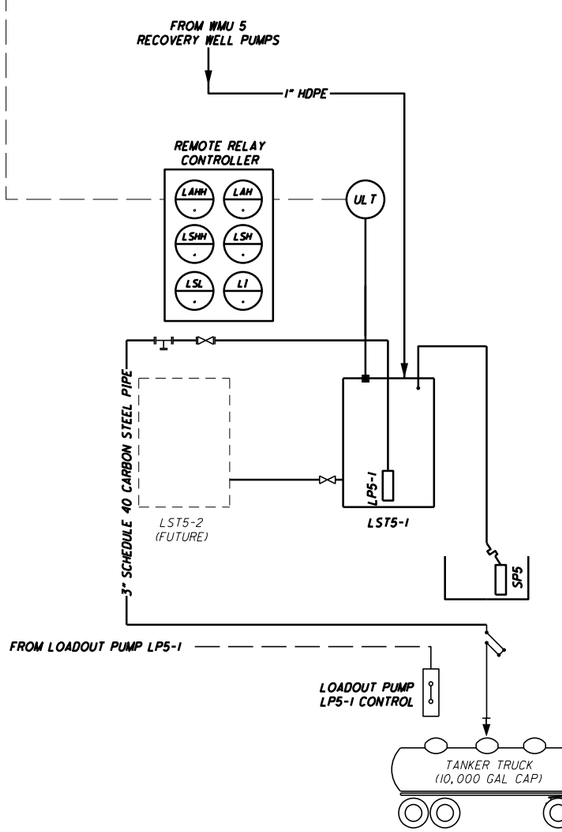

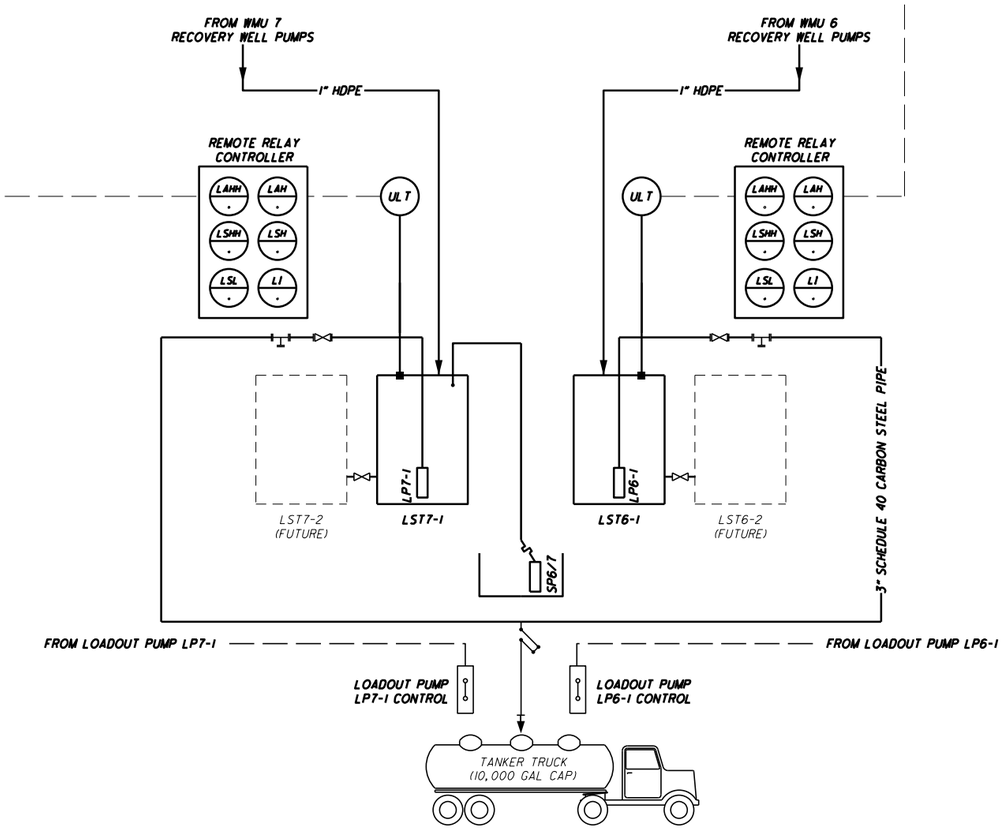

LEGEND

SP	SUMP PUMP
ULT	ULTRASONIC LEVEL SENSOR
LI	LEVEL INDICATOR
LAH	LEVEL ALARM (HIGH) (LOSS OF ACOUSTIC SIGNAL) (LOSS OF POWER)
LSH	LEVEL SWITCH (HIGH)
LSHH	LEVEL SWITCH (HIGH-HIGH AND LOW 2)
LAHH	LEVEL ALARM (HIGH-HIGH) (RED LIGHT)
LSL	LEVEL SWITCH (LOW)
RW-11	EXISTING RECOVERY WELL (CONVERTED PIEZOMETER)
RW-3	EXISTING RECOVERY WELL
— —	TANK NOT FULL SIGNAL, 120 VAC
NRP-*	AS-BUILT NESTED RECOVERY WELL AND PIEZOMETER
DPW-*	AS-BUILT CONVERSION TO DUAL PURPOSE RECOVERY WELL/PIEZOMETER

NOTES

1. THE 120 VAC "TANK FULL" SIGNAL WIRES TO RW-11 AND RW-12 ENERGIZE THE WELL LEVEL CONTROLLERS AND ARE IN THE SAME CONDUITS AS THE 120 VAC POWER SUPPLY WIRES FOR THE HEATING CABLES AND CENTRIFUGAL LEACHATE EXTRACTION PUMP. SEE TRENCH DETAIL ON SHEET M01.
2. THE EXISTING POWER SUPPLY TO RW-11 IS FROM RW-3.

ENGINEER'S SEAL

STATE OF OHIO — PAUL E. MANN — E-43022 — REGISTERED PROFESSIONAL ENGINEER

2/24/12

NO.	DATE	BY	DESCRIPTION
1	02/22/2012	SGW	COA REPORT

The Mannik & Smith Group, Inc.
Civil Engineering, Surveying and Environmental Consulting

CLIENT
ENVIROSAFE
ENVIROSAFE SERVICES OF OHIO, INC.

PROJECT
LEACHATE RECOVERY SYSTEM
2011 ENHANCEMENTS AS-BUILT

PROCESS AND INSTRUMENTATION DIAGRAM

101

2/24/2012

S:\Projects\Projects A-E\E108071\CAD\2011 LRS COA\PLANS\E108071_14_0_I01.dgn

ATTACHMENT 3

Storage Tank Load-Out Pump Specifications

ATTACHMENT 4

Containment Area Sump Pump Specifications

ATTACHMENT 5

Storage Tank, Restraint System, and Level Controls Specifications

ATTACHMENT 6

Leachate Recovery Pump and Well Level Controls Specifications

ATTACHMENT 7

Hemco Gangway, Hose Arm, and Platform Instructions and Drawings

ATTACHMENT 8

Storage Tank Load-Out Pump Manuals

ATTACHMENT 9

PolyProcessing Installation Manual

ATTACHMENT 10

Tank Heating System Installation, Operation and Maintenance Manual

ATTACHMENT 11

Storage Tank Level Control Systems Manuals

ATTACHMENT 12

Leachate Recovery Pump System Manuals