Δt DELTA-T

FAN TEST REPORT

PROJECT Aquaculture Facility ADDRESS Navarro College

DATE

FAN NUMBER	VF-1			
SERVICE	Exhaust			
LOCATION	Aquaculture Incl.			
FAN MFG.	Acme			
TYPE	Prop			
MODEL NO.	DC48J			
TEST DATA	CFM	SP	RPM	BHP
DESIGN	18000	.125	385	
ACTUAL	*	*	365	.667
MOTOR MFG.	General Electric			
FRAME	56			
H.P.	1			
RPM	1725			
AMPS	3.4	ACT: 1.6 /2.6 / 3.3		
VOLTS	230	ACT: 234 / 234/ 240		
DRIVE MFG.	Browning			
FAN DRIVE	AK121x			
MOTOR DRIVE	2 5/8O.D.5/8			
NO. BELTS & SIZE	1 @ A46			
CENTER'S DIST.	11 3/8			

REMARKS: *Not field obtainable, no duct work, set by RPM.

FAN NUMBER	VF-2			
SERVICE	Exhaust			
LOCATION	Aquaculture Inc.			
FAN MFG.	Acme			
TYPE	Prop			
MODEL NO.	DC48J			
TEST DATA	CFM	SP	RPM	BHP
DESIGN	18000	.125	385	
ACTUAL	*	*	365	.667
MOTOR MFG.	General Electric			
FRAME	56			
H.P.	1			
RPM	1725			
AMPS	3.4	ACT: 1.6 / 2.6/ 3.3		
VOLTS	230	ACT: 234 / 234/ 240		
DRIVE MFG.	Browning			
FAN DRIVE	AK121x1"			
MOTOR DRIVE	2 5/8O.D.x5/8			
NO. BELTS & SIZE	1 @ A46			
CENTER'S DIST.	11 3/8 + 1 - 1/4			

REMARKS: *Not field obtainable, no duct work, set by RPM.

PAGE ____ OF ____

Δt DELTA-T

FAN TEST REPORT

PROJECT: Aquaculture Facility

ADDRESS: Navarro College

DATE:

FAN NUMBER	VF-3			
SERVICE	Exhaust			
LOCATION	Aquaculture Incl.			
FAN MFG.	Acme			
TYPE	Prop			
MODEL NO.	DC48J			
TEST DATA	CFM	SP	RPM	BHP
DESIGN	18000	.125	385	
ACTUAL	*	*	360	.667
MOTOR MFG.	General Electric			
FRAME	56			
H.P.	1			
RPM	1725			
AMPS	3.4	ACT: 1.5 / 2.5 / 3.5		
VOLTS	230	ACT: 234 / 234 / 240		
DRIVE MFG.	Browning			
FAN DRIVE	AK121x			
MOTOR DRIVE	2 5/8O.D.5/8			
NO. BELTS & SIZE	1 @ A46			
CENTER'S DIST.	11 3/8			

REMARKS: *Not field obtainable, no duct work, set by RPM.

FAN NUMBER	VF-4			
SERVICE	Exhaust			
LOCATION	Aquaculture Incl.			
FAN MFG.	Acme			
TYPE	Prop			
MODEL NO.	DC48J			
TEST DATA	CFM	SP	RPM	BHP
DESIGN	18000	.125	385	
ACTUAL	*	*	365	.667
MOTOR MFG.	General Electric			
FRAME	56			
H.P.	1			
RPM	1725			
AMPS	3.4	ACT: 1.5 / 2.5 / 3.5		
VOLTS	230	ACT: 234 / 234 / 240		
DRIVE MFG.	Browning			
FAN DRIVE	AK121x1"			
MOTOR DRIVE	2 5/8O.D.x5/8			
NO. BELTS & SIZE	1 @ A46			
CENTER'S DIST.	11 3/8 + 1 - 1/4			

REMARKS: *Not field obtainable, no duct work, set by RPM.

PAGE ____ OF ____

Δt DELTA-T

FAN TEST REPORT

PROJECT: Aquaculture Facility

ADDRESS: Navarro College

DATE:

FAN NUMBER	VF-5			
SERVICE	Exhaust			
LOCATION	Aquaculture Incl.			
FAN MFG.	Acme			
TYPE	Prop			
MODEL NO.	DC48J			
TEST DATA	CFM	SP	RPM	BHP
DESIGN	18000	.125	385	
ACTUAL	*	*	365	.667
MOTOR MFG.	General Electric			
FRAME	56			
H.P.	1			
RPM	1725			
AMPS	3.4	ACT: 1.5 /2.5 /3.5		
VOLTS	230	ACT: 234 /234 /240		
DRIVE MFG.	Browning			
FAN DRIVE	AK121x			
MOTOR DRIVE	2 5/80.D.x5/8			
NO. BELTS & SIZE	1 @ A46			
CENTER'S DIST.	11 3/8			

REMARKS: *Not field obtainable, no duct work, set by RPM.

FAN NUMBER	VF-6			
SERVICE	Exhaust			
LOCATION	Aquaculture Incl.			
FAN MFG.	Acme			
TYPE	Prop			
MODEL NO.	DC48J			
TEST DATA	CFM	SP	RPM	BHP
DESIGN	18000	.125	385	
ACTUAL	*	*	365	.667
MOTOR MFG.	General Electric			
FRAME	56			
H.P.	1			
RPM	1725			
AMPS	3.4	ACT: 1.5 / 2.5/ 3.5		
VOLTS	230	ACT: 234 / 234/ 240		
DRIVE MFG.	Browning			
FAN DRIVE	AK121x1"			
MOTOR DRIVE	2 5/80.D.x5/8			
NO. BELTS & SIZE	1 @ A46			
CENTER'S DIST.	11 3/8 + 1 - 1/4			

REMARKS: *Not field obtainable, no duct work, set by RPM.

Δt DELTA-T

FAN TEST REPORT

PROJECT Aquaculture Facility ADDRESS Navarro College

DATE

FAN NUMBER	VF-7			
SERVICE	Exhaust			
LOCATION	Aquaculture Incl.			
FAN MFG.	Acme			
TYPE	Prop			
MODEL NO.	DC48J			
TEST DATA	CFM	SP	RPM	BHP
DESIGN	18000	.125	385	
ACTUAL	*	*	365	.724
MOTOR MFG.	General Electric			
FRAME	56			
H.P.	1			
RPM	1725			
AMPS	3.4	ACT: 2.3 / 2.7 / 3.6		
VOLTS	230	ACT: 234 / 234 / 240		
DRIVE MFG.	Browning			
FAN DRIVE	AK121x1			
MOTOR DRIVE	2 5/8O.D.x5/8			
NO. BELTS & SIZE	1 @ A46			
CENTER'S DIST.	11 3/8			

REMARKS: *Not field obtainable, no duct work, set by RPM.

FAN NUMBER	VF-8			
SERVICE	Exhaust			
LOCATION	Aquaculture Incl.			
FAN MFG.	Acme			
TYPE	Prop			
MODEL NO.	DC48J			
TEST DATA	CFM	SP	RPM	BHP
DESIGN	18000	.125	385	
ACTUAL	*	*	365	.650
MOTOR MFG.	General Electric			
FRAME	56			
H.P.	1			
RPM	1725			
AMPS	3.4	ACT: 2.1 / 2.6 / 3.6		
VOLTS	230	ACT: 234 / 234 / 240		
DRIVE MFG.	Browning			
FAN DRIVE	AK121x1"			
MOTOR DRIVE	2 5/8O.D.x5/8"			
NO. BELTS & SIZE	1 @ A46			
CENTER'S DIST.	11 3/8 + 1 - 1/4			

REMARKS: *Not field obtainable, no duct work, set by RPM.

DELTA-T

FAN TEST REPORT

PROJECT Aquaculture Facility ADDRESS Navarro College

DATE

FAN NUMBER	VF-9			
SERVICE	Exhaust			
LOCATION	Aquaculture Incl.			
FAN MFG.	Acme			
TYPE	Prop			
MODEL NO.	DC48J			
TEST DATA	CFM	SP	RPM	BHP
DESIGN	18000	.125	385	
ACTUAL	*	*	360	.724
MOTOR MFG.	General Electric			
FRAME	56			
H.P.	1			
RPM	1725			
AMPS	3.4	ACT: 2.4 / 2.9 / 3.3		
VOLTS	230	ACT: 234 / 234 / 240		
DRIVE MFG.	Browning			
FAN DRIVE	AK121x			
MOTOR DRIVE	2 5/8O.D.x5/8			
NO. BELTS & SIZE	1 @ A46			
CENTER'S DIST.	11 3/8			

REMARKS: *Not field obtainable, no duct work, set by RPM.

FAN NUMBER	VF-10			
SERVICE	Exhaust			
LOCATION	Aquaculture Incl.			
FAN MFG.	Acme			
TYPE	Prop			
MODEL NO.	DC48J			
TEST DATA	CFM	SP	RPM	BHP
DESIGN	18000	.125	385	
ACTUAL	*	*	360	.724
MOTOR MFG.	General Electric			
FRAME	56			
H.P.	1			
RPM	1725			
AMPS	3.4	ACT: 2.4 /2.9 / 3.3		
VOLTS	230	ACT: 234 /234 / 240		
DRIVE MFG.	Browning			
FAN DRIVE	AK121x1"			
MOTOR DRIVE	2 5/8O.D.x5/8			
NO. BELTS & SIZE	1 @ A46			
CENTER'S DIST.	11 3/8+1"-1/4"			

REMARKS: *Not field obtainable, no duct work, set by RPM.

GREENHOUSE EXHAUST

Δt DELTA-T

FAN TEST REPORT

PROJECT Greenhouse ADDRESS Navarro College

DATE

FAN NUMBER	West			
SERVICE	Exhaust			
LOCATION	Greenhouse			
FAN MFG.	Quiet Air			
TYPE	Prop			
MODEL NO.	CHP44100			
TEST DATA	CFM	SP	RPM	BHP
DESIGN				
ACTUAL	*	*	400	.98
MOTOR MFG.	Doerr			
FRAME	J56H			
H.P.	1			
RPM	1725			
AMPS	13.6	ACT: 13.1/ /		
VOLTS	115	ACT: 114 / /		
DRIVE MFG.	Browning			
FAN DRIVE	AK144x1"			
MOTOR DRIVE	3 1/2O.D.x5/8			
NO. BELTS & SIZE				
CENTER'S DIST.	16"			

REMARKS: *Not field obtainable, no duct work, set by RPM.

FAN NUMBER	East			
SERVICE	Exhaust			
LOCATION	Greenhouse			
FAN MFG.	Quiet Air			
TYPE	Prop			
MODEL NO.	CHP44100			
TEST DATA	CFM	SP	RPM	BHP
DESIGN				
ACTUAL	*	*	405	.98
MOTOR MFG.	Doerr			
FRAME	J56H			
H.P.	1			
RPM	1725			
AMPS	13.6	ACT: 13.1/ /		
VOLTS	115	ACT: 114 / /		
DRIVE MFG.	Browning			
FAN DRIVE	AK144x1"			
MOTOR DRIVE	3 1/2O.D.x5/8			
NO. BELTS & SIZE				
CENTER'S DIST.	16"			

REMARKS: *Not field obtainable, no duct work, set by RPM.

PAGE OF

PUMPS

Δt DELTA-T

PUMP TEST REPORT

PROJECT Aquaculture Facility
Cascade Greenhouse

ADDRESS Navarro College

DATE

PUMP NO.	HEWP-1		
MANUFACTURER	Aurora		
SIZE	3/4x1x7B		
SERVICE	Pond Effluent		
TEST DATA	GPM	FT. HD.	BHP
DESIGN	30	34	.548
ACTUAL	23.5	38.8	1490
DISCHARGE	11.5#	26.56	
SUCTION	60"WG=5		
Δp	380	X 2.31= 31.56 FT. HD.	
BLOCK OFF			
DISCHARGE	17.75#	41	
SUCTION	40"WG	3.3	
Δp		X 2.31=44.3 FT. HD.	
MOTOR MFG.	Marathon		
FRAME	56.6		
H.P.	3/4		
RPM	1725		
AMPS	3	ACT: 2.6 / 1.9 / 2.3	
VOLTS	208	ACT: 226 / 226 / 234	
REMARKS:			

PUMP NO.	HEWP-2		
MANUFACTURER	Aurora		
SIZE	3/4x1x7B		
SERVICE	Pond Effluent		
TEST DATA	GPM	FT. HD.	BHP
DESIGN	30	34	.548
ACTUAL	26	33.54	.490
DISCHARGE	9#	20.79	
SUCTION	60"WG=5		
Δp		X 2.31= 25.79 FT. HD.	
BLOCK OFF			
DISCHARGE	16.25 = 37.5		
SUCTION	45"	3.75	
Δp		X 2.31= FT. HD.	
MOTOR MFG.	Marathon		
FRAME	56.6		
H.P.	3/4		
RPM	1725		
AMPS	3	ACT: 2.6 / 2.2 / 1.9	
VOLTS	208	ACT: 226 / 226 / 234	
REMARKS:			

PAGE ____ OF ____

ENCLOSED IMPELLER

DATED MA

HEWP #

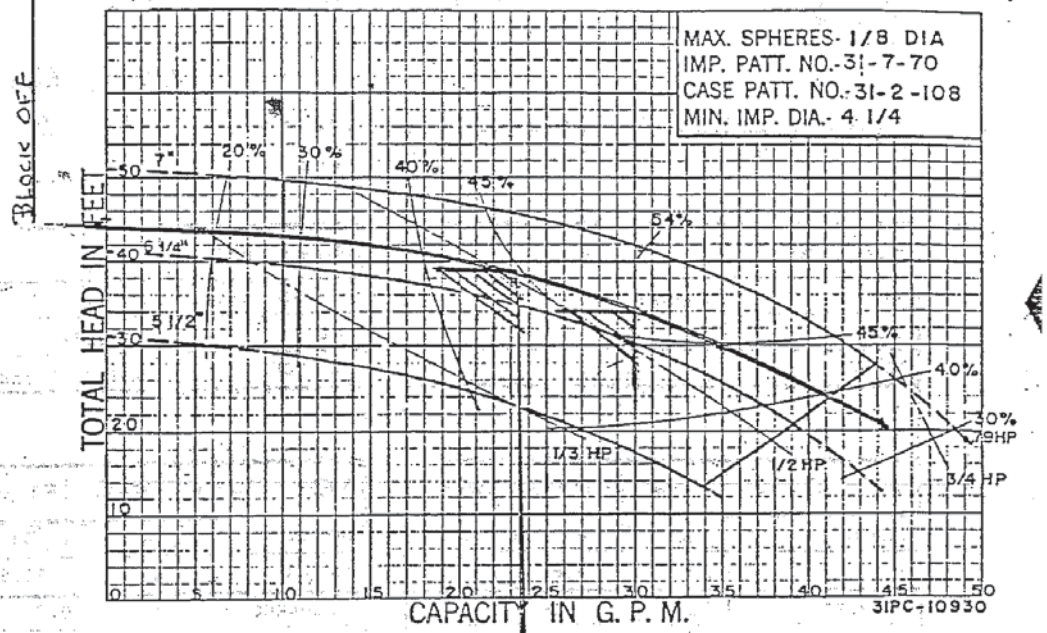

30 GPM @ 34 TDH

1"

1"

AURORA PUMP
A UNIT OF GENERAL SIGNAL CORPORATION
AURORA • ILLINOIS

A-40075

ENCLOSED IMPELLER

DATED MARCH

HEWP #2

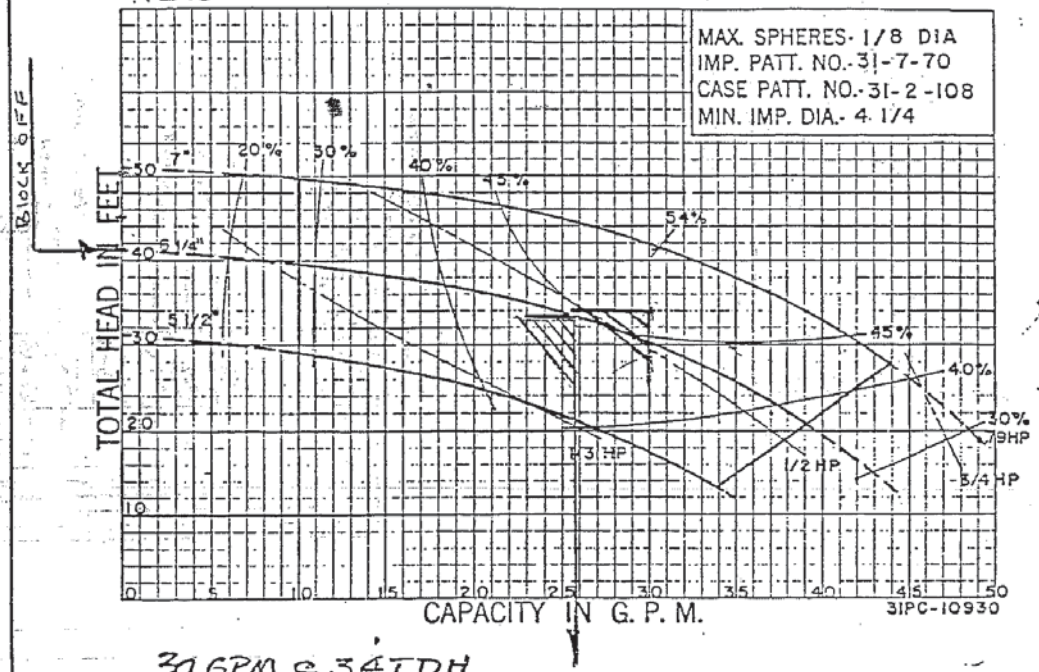

30 GPM @ 34 TDH

1"

1"

A-40075

AURORA PUMP

A UNIT OF GENERAL SIGNAL CORPORATION

AURORA • ILLINOIS

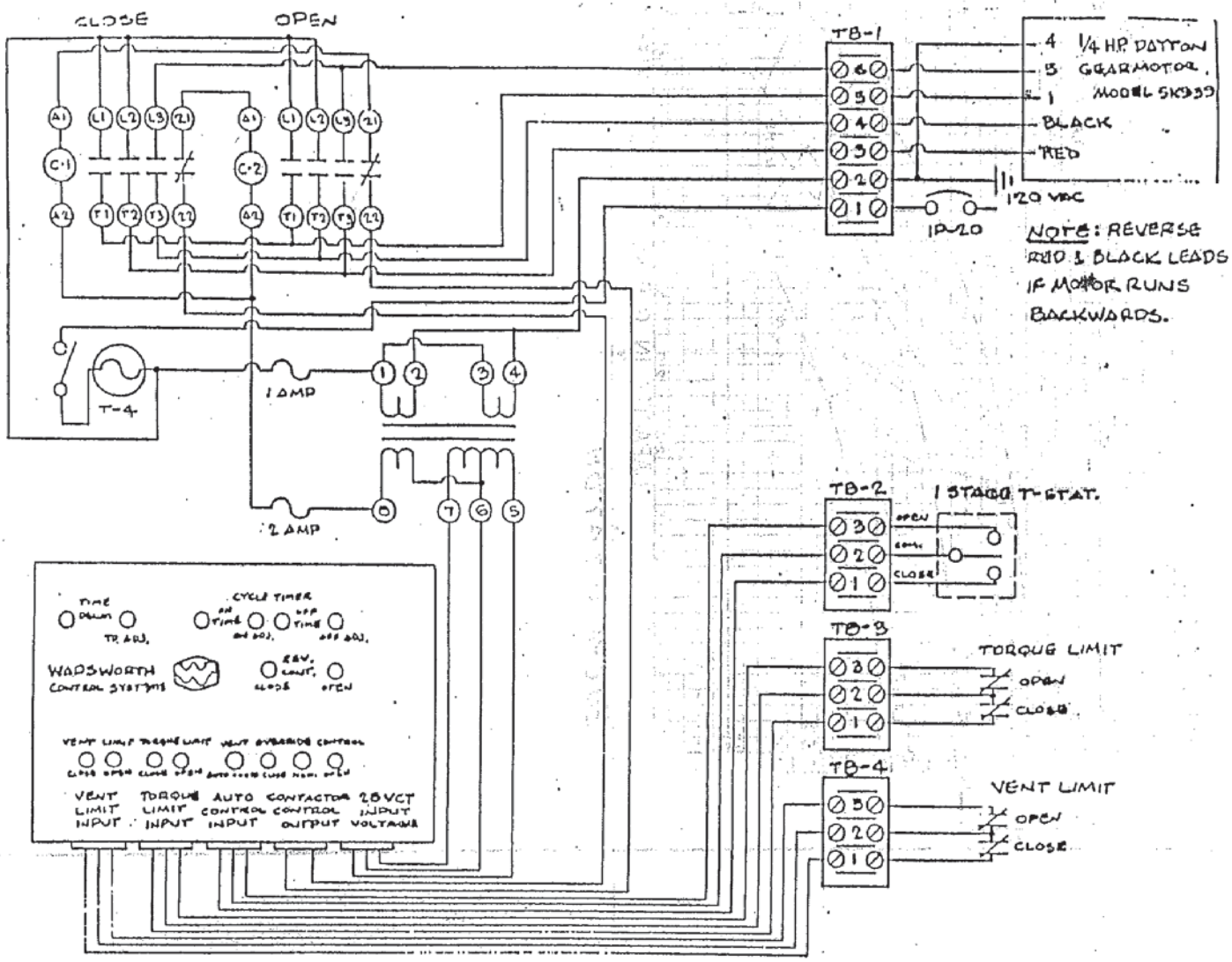
CLOSE
OPEN
C-1
C-2
T-4
1 AMP
2 AMP
TB-1
1/4 HP DAYTON
GEARMOTOR,
MODEL 5K933
BLACK
RED
120 VAC
1P-20
NOTE: REVERSE RED & BLACK LEADS IF MOTOR RUNS BACKWARDS.
TB-2
1 STAGE T-STAT.
OPEN
COMM
CLOSE
TB-3
TORQUE LIMIT
OPEN
CLOSE
TB-4
VENT LIMIT
OPEN
CLOSE
TIME DELAY
TR. ADJ.
CYCLE TIMER
ON TIME
OFF TIME
WADSWORTH
CONTROL SYSTEMS
REV. LIMIT
CLOSE
OPEN
VENT LIMIT
TORQUE LIMIT
VENT OVERRIDE CONTROL
VENT LIMIT INPUT
TORQUE LIMIT INPUT
AUTO CONTROL INPUT
CONTACTOR CONTROL OUTPUT
28VCT INPUT VOLTAGE

HEAT EXCHANGER

MANUFACTURER Baltimore Aircoil

MODEL ECS-033-1

PRIMARY SIDE

DESIGN		ACTUAL	
EWT	LWT	EWT	LWT
125°	71.93 @ 30 GPM	122	67.6 @ 34 GPM

SECONDARY SIDE

DESIGN		ACTUAL	
EWT	LWT	EWT	LWT
62°	115° @ 30 GPM	*40.5	110 @ 30 GPM **

* 21.5° below design temperature
** Venturi reading

NOTE: (1) The above tests were run in the first week of January.

(2) The boiler was in series with the plate heat exchanger (see explanation under boiler tab) when the above tests were being performed. The actual water temperature entering the acquaculture ponds was 128°. The boiler was operating as listed below.

BOILER

EWT	LWT	GPM
110	128.3	30

Boiler controls were operating.

BOILER FIRES	BOILER SHUTS OFF
116.6°	128.3°

HEATING AIR SPACE

Δt DELTA-T

AIR UNIT / COIL TEST REPOR

PROJECT: Aquaculture Facility With Cascade Greenhouse
ADDRESS: Navarro College
SYSTEM/UNIT: FAHU-1
LOCATION: Cascade Greenhouse

UNIT MFG.	Trane
TYPE	Draw Thru
MODEL NO.	

FILTER	None
S.P. ACROSS	
CONDITION	

DESIGN COND.	CFM	SP	RPM	BHP
DESIGN	2200	1.0	1430	
ACTUAL	2149	1.0	1360	.510

STATIC PRESSURE READINGS "H_2O	
FAN SUCTION	.48
FAN DISCHARGE	.52

OUTSIDE AIR	RETURN	O.S.A.
DESIGN		
ACTUAL		

MOTOR MFG.	Gould			
Frame	143T			
H.P.	1			
RPM	1745			
AMPS	3.9	ACT: 2.2	/ 2.6	/ 3.5
VOLTS	230	ACT: 236	/ 232	/ 240

DRIVE MFG.	Browning
FAN DRIVE	BK60x1.0"
MOTOR DRIVE	1VF5.0x7/8"
NO. BELTS & SIZE	1 5L4L440
Center's Dist.	14 1/8 + 1 - 3/4

COILS TYPE		CFM	ΔP "H_2O ACROSS	E.A.T. D.B.	E.A.T. W.B.	L.A.T. D.B.	L.A.T. W.B.	E.W.T. °F	L.W.T. °F	ROWS	GPM	H_2O "Δ THRU
Heating	DES.	2200		50	/	67.4	/	80	74.4	4	15	.60
	ACT.			49	/	64.7	/	79	72.3	4	*	*
	DES.				/		/					
	ACT.				/		/					
	DES.				/		/					
	ACT.				/		/					

* Pressure drop was measured at 3'. Pump GPM is below design requirements; we notifie the Trane Company to check to see if pressure drop is in error.

REMARKS: Entering side of coil traversed with vane anemometer for total CFM.

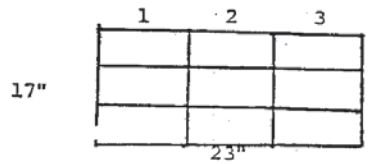

1 FPM	2 FPM	3 FPM
900	810	680
840	860	680
830	840	700
2570	2510	2060

Total FPM - No. Readings = Average FPM X Area = Total CFM

7140 - 9 = 793 X 2.71 = 2149

TEST DATE _____ READINGS BY _____

PAGE OF

Δt DELTA-T

AIR UNIT / COIL TEST REPORT

PROJECT Aquaculture Facility With Cascade Greenhouse
ADDRESS Navarro College

SYSTEM/UNIT FAHU-1
LOCATION Cascade Greenhouse

UNIT MFG.	Trane
TYPE	Draw Thru
MODEL NO.	

FILTER	None
S.P ACROSS	
CONDITION	

DESIGN COND.	CFM	SP	RPM	BHP
DESIGN	2200	1.00	1430	.97
ACTUAL	2114	1.00	1350	.510

STATIC PRESSURE READINGS "H_2O	
FAN SUCTION	.48
FAN DISCHARGE	.52

OUTSIDE AIR	RETURN	O.S.A.
DESIGN		
ACTUAL		

MOTOR MFG.	Gould	
Frame	143T	
H.P.	1	
RPM	1745	
AMPS	3.9	ACT: 2.2 /2.6 /3.5
VOLTS	230	ACT: 236 /232 /240

DRIVE MFG.	Browning
FAN DRIVE	BK60x1.0
MOTOR DRIVE	1VM5.0x7/8"
NO. BELTS & SIZE	1 56 4L440
Center's Dist.	14 1/8 + 1" - 3/4"

COILS TYPE		CFM	ΔP "H_2O ACROSS	E.A.T. D.B.	E.A.T. W.B.	L.A.T. D.B.	L.A.T. W.B.	E.W.T. °F	L.W.T. °F	ROWS	GPM	H_2O ΔP THRU
Heating	DES.	2200		50	/	67.4	/	80	74.4	4	15	.60
	ACT.	2114		49	/	64.7	/	79	72.3	4	*	*
	DES.				/		/					
	ACT.				/		/					
	DES.				/		/					
	ACT.				/		/					

*Pressure drop was measured at 3'. Pump GPM is below design requirements; we notified the Trane Company to check to see if pressure drop is in error.

Entering side of coil traversed with vane anemometer for total CFM.

REMARKS:

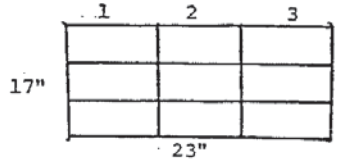

1 FPM	2 FPM	3 FPM
800	800	740
840	840	640
840	780	740
2480	2420	2120

Total FPM - No. Readings = Average FPM X Area = Total CFM

7020 - 9 = 780 X 2.71 = 2114

TEST DATE _____ READINGS BY _____

PAGE ____ OF ____

BOILER

JOB: Aquaculture Fa ility With
Cascade Greenhouse
Navarro College

BOILER

MANUFACTURER	Peerless
SERIAL NUMBER	211-8015
MAX BTU PER HR	1,260,000
MIN BTU PER HR	50,400
OUT PUT BTU PER HR	1,008,000
MAX OPERATING PRESSURE	30#

BOILER OPERATION

ACTUAL

EWT	LWT	GPM
110°F	128.3	*30 (Note orig. design 15 GPM)

BOILER FIRES	BOILER SHUTS OFF
116.6°F	128.3

*The piping to the boiler has been changed from the original design. The plate heat exchanger has been piped so it can manually be put in series with the boiler. When operating in this mode the boiler will have 30 GPM passing through it instead of the original designed 15 GPM.

The above piping changes were made because the water temperature in the aquaculture ponds could not be maintained during the extremely cold weather of December 1983.