Compliance Emissions Test Report

Northern Metals, LLC
Pacific Street Yard Facility
2800 Pacific Street North
Common Stack (STRU1)
Minneapolis, Minnesota 55411
Project No. M173006 Rev.1

Scott Helberg
2800 Pacific Street North
Minneapolis, Minnesota 55401
(612) 529-9221
Scott.Helberg@emrgroup.com
Facility ID: 05300480
AQ File Number: 262
Emission Unit Number: STRU1
Test Dates:
July 26 and 27, and August 1 and 2, 2017

Testing Conducted By:
Mostardi Platt
888 Industrial Drive
Elmhurst, Illinois 60126
(630) 993-2100

mostardi platt

Compliance Emissions Test Report

Northern Metals, LLC
Pacific Street Yard Facility
2800 Pacific Street North
Common Stack (STRU1)
Minneapolis, Minnesota 55411
July 26 and 27, and August 1 and 2, 2017

Testing Conducted By:
Mostardi Platt
888 Industrial Drive
Elmhurst, Illinois 60126
(630) 993-2100

Report Submittal Date
September 14, 2017

Revised Report Submittal Date
October 6, 2017

© Copyright 2017
All rights reserved in
Mostardi Platt

Project No. M173006 Rev. 1

Minnesota Pollution Control Agency
520 Lafayette Road
St. Paul, MN 55155-4194

Air Performance Test Form

Certifications Required for Performance Test Reports

NOTE: *All performance test reports must contain a certification by the responsible parties that the test results have been reported accurately, that the field data is a true representation of the sampling procedures, and that the process data is a true indicator of the operating parameters of the emissions unit at the time of the performance test. (Ref. Minn. R. 7017.2040). Performance test results will not be accepted without certification of the report. Please note that original signatures are required.*

1. **Certification of sampling procedures by the team leader of the personnel conducting the sampling procedures:**

   "I certify under penalty of law that the sampling procedures were performed in accordance with the approved test plan and that the data presented in this test report are, to the best of my knowledge and belief, true, accurate, and complete. All exceptions are listed and explained below."

   James F. Robertson INC
   Signature of responsible official

   James F. Robertson
   Printed name of person signing

   Title Project Manager

   Date September 15, 2017

2. **Certification of analytical procedures by the person responsible for the laboratory analysis of field samples:**

   "I certify under penalty of law that the analytical procedures were performed in accordance with the requirements of the test methods and that the data presented for use in the test report were, to the best of my knowledge and belief, true, accurate, and complete. All exceptions are listed and explained below."

   Jeffrey M. Crivlare
   Signature of responsible official

   Jeffrey M. Crivlare
   Printed name of person signing

   Title Senior Project Manager

   Date September 15, 2017

3. **Certification of test report by the senior staff person at the testing company who is responsible for compiling and checking the test report:**

   "I certify under penalty of law that this test report and all attachments were prepared under my direction or supervision in accordance with a system designed to assure that qualified personnel properly gathered and evaluated the test information submitted. Based on my inquiry of the person or persons who performed sampling and analysis relating to the performance test, the information submitted in this test report is, to the best of my knowledge and belief, true, accurate, and complete. All exceptions are listed and explained below."

   Jeffrey M. Crivlare
   Signature of responsible official

   Jeffrey M. Crivlare
   Printed name of person signing

   Title Senior Project Manager

   Date September 15, 2017

4. **Certification of test report by owner or operator of the emission facility:**

   "I certify under penalty of law that the information submitted in this test report accurately reflects the operating conditions at the emission facility during this performance test and describes the date and nature of all operational and maintenance activities that were performed on process and control equipment during the month prior to the performance test. Based on my inquiry of the person or persons who performed the operational and maintenance activities, the information submitted in this test report is, to the best of my knowledge and belief, true, accurate, and complete. All exceptions are listed and explained below."

   Scott Helberg
   Signature of responsible official

   Scott Helberg
   Printed name of person signing

   Title Chief Operating Officer

   Date 9/15/17

Note: This form is to be submitted as part of the performance test report and must have original signatures.

TABLE OF CONTENTS

1.0 EXECUTIVE SUMMARY 1

2.0 PROCESS DESCRIPTION 2

3.0 TEST METHODOLOGY 3
- Method 1 Sample and Velocity Traverse Determination 3
- Method 2 Volumetric Flow Rate Determination 3
- Method 3A Oxygen (O_2)/Carbon Dioxide (CO_2) Determination 4
- Asbestos Determination 4
- Method 9 Visible Emissions Determination 4
- Method 23 Dioxin and Furan and Polychlorinated Biphenyl Determination 4
- Methods 25A and 18 Volatile Organic Compound (VOC) Determination 5
- Mercury Determination by Method 30B (Sorbent Trap Method) 5
- Method 0061 Hexavalent Chromium Determination 5

4.0 TEST RESULT SUMMARIES 6

5.0 CERTIFICATION 11

APPENDIX
- Appendix A - Plant Operating Data 13
- Appendix B - Test Section Diagram 19
- Appendix C - Sample Train Diagrams 24
- Appendix D - Calculation Nomenclature and Formulas 33
- Appendix E - Laboratory Sample Analysis 46
- Appendix F - Reference Method Test Data (Computerized Sheets) 125
- Appendix G - Field Data Sheets 160
- Appendix H - Calibration Data 214
- Appendix I - Visible Emissions Data and Reader Certification 247
- Appendix J - Mercury QA/QC Data 259
- Appendix K – Calibration Gas Cylinder Certifications 264
- Appendix L - Test Plan and Test Plan Approval Letter 270

 © Mostardi Platt

1.0 EXECUTIVE SUMMARY

MOSTARDI PLATT conducted an emission compliance test program for Northern Metals, LLC at the Pacific Street Yard Facility on the Common Stack (STRU1) on July 26 and 27, 2017 and August 1 and 2, 2017. This report summarizes the results of the test program and test methods used. The test location, test dates, and test parameters are summarized below.

TEST INFORMATION		
Test Location	**Test Dates**	**Test Parameters**
Common Stack (STRU1)	July 26 and 27, 2017 and August 1 and 2, 2017	Hexavalent Chromium (Cr^{+6}) by USEPA Method 0061 Asbestos sampled utilizing Method 5 and analyzed by transmission electron microscopy (TEM) according to a modified Yamate Level II method Mercury (Hg) by USEPA Method 30B Dioxin/Furan (D/F) and Polychlorinated Biphenyls (PCB) by USEPA Method 23 Volatile Organic Compounds (VOC) by USEPA Methods 25A and 18 Visible Emissions (VE) by USEPA Method 9

The purpose of the test program was to demonstrate compliance with applicable emissions limits, and the requirements in the current MPCA Air Quality permit 05300480-003.

Selected results of the test program are summarized below. A complete summary of emission test results follows the narrative portion of this report.

TEST RESULTS					
Test Location	**Test Parameter**	**Test Dates**	**Emission Limit**	**Emission Rate**	**Annual Emissions [1]**
Common Stack (STRU1)	Cr^{+6}	8/1/17	1.40 lb/yr	0.000209 lb/hr	0.79 lb/yr
	Asbestos	7/26/17 and 7/27/17	N/A	0.000 lb/hr	0.000 lb/hr
	Hg	8/1/17	3.0 lb/yr	0.0005 lb/hr	1.8890 lb/yr
	D/F	7/26/17, 7/27/17, and 8/1/17	N/A	1.57×10^{-09} lb/hr	5.92×10^{-06} lb/yr
	PCB		N/A	0.013593 lb/hr	51.36 lb/yr
	VOC	8/2/17	N/A	39.55 lb/hr	149,419.90 lb/yr
	VE	7/26/17	20% maximum for any 6-minute period	6.9 %	N/A

1. Annual emissions estimated on the basis of using 3,778 annual hours of operation, per MPCA's TSD for permit 05300480-003

The Hg emissions are based on Runs 1, 2, and 4 as Run 3 did not meet the Method 30B QA/QC acceptance criteria.

© Mostardi Platt

Plant operating data and fuel data as provided by Northern Metals, LLC are included in Appendix A.

The identifications of the individuals associated with the test program are summarized below.

TEST PERSONNEL INFORMATION		
Location	**Address**	**Contact**
Test Facility	Pacific Street Yard Facility 2800 Pacific Street North Minneapolis, Minnesota 55411	Mr. Scott Helberg Chief Operating Officer (612) 529-9221 (phone) Scott.Helberg@emrgroup.com
Testing Company Representative	Mostardi Platt 888 Industrial Drive Elmhurst, Illinois 60126	Mr. James Robertson Project Manager (630) 993-2100 (phone) jrobertson@mp-mail.com

The test crew consisted of Messrs. A. Jensen, A. Hill, J. Kukla, L. Sorce, J. Biggins, J. Rogers, K. Cadagin, L. Mazza, and J. Robertson of Mostardi Platt. Mr. Marc Severin of the Minnesota Pollution Control Agency (MPCA) observed the test program.

2.0 PROCESS DESCRIPTION

Northern Metals, LLC is a metal recycling company whose wholly-owned subsidiary, American Iron & Supply Company, operates the Pacific Street Yard Facility at 2800 Pacific Street North, Minneapolis, Minnesota. The facility includes 12 acres of property and five buildings: the Office Building, the South Warehouse (attached to the Office Building), the Metal Shredder Building, the North Warehouse, and Metal Recycling Plant Building (which includes the attached Rain and Snow Shed) and the Scale Building. The Pacific Street Yard accepts most grades of bulk quantity commercial, industrial, and demolition scrap metal and processes it for sale to customers such as steel mills, foundries, smelting plants, or primary aluminum plants. The facility operates a Metso Texas hammer mill metal shredder. The shredder consist of the in-feed conveyor system, the shredder itself, size separation equipment (referred to collectively as the cascade cleaning system), initial magnetic separation equipment, manual separation stations, finished product conveyor system, and the associated air pollution control equipment. For the purpose of this testing, the shredder (EU001) itself and the cascade cleaning system (EU002) are each considered an emission unit. The control equipment design uses two exhaust streams- one from the shredder and one from the cascade cleaning system. Each exhaust system is controlled by a high efficiency cyclone, a wet scrubber, and a fabric filtration system. The controlled emissions from the two exhaust streams vent through a single stack (Common Stack STRU1). Northern Metals installed temporary cameras fixed on gauges of cyclones pressure drop, scrubber water level sight glasses and baghouse pressure drops. Cameras were used to provide remote viewing in order to record data at 15-minute intervals during testing. The control equipment, monitored parameters and current permit limits are summarized below.

 © Mostardi Platt

Control equipment ID	Control Equipment nomenclature	Monitored parameters Control device parameters at minimum of 15 minute intervals during the test	Current Permit Limits
EU001	Cyclone CE001	Pressure drop, 1.5-5.0 inches w.c.	1.0”-11.0”
	Scrubber CE004	Pressure drop, 5.5-8.5 inches w.c.	4.0”-9.0”
		Water level in sight glass (level to top) was between the two lines	7.0”-7.5”
	Fabric Filter CE006	Pressure drop, 3.8-4.5 inches w.c.	2.0”-8.0”
EU002	Cyclone	Pressure drop, 1.0-2.0 inches w.c.	No Limit
	Scrubber CE005	Pressure drop, 6.0-8.5 inches w.c.	4.0”-9.0”
		Water level in sight glass (level to top) was between the two lines	7.0”-7.5”
	Fabric Filter CE007	Pressure drop, 3.0-3.5 inches w.c.	1.8”-8.0”

3.0 TEST METHODOLOGY

Emissions testing were conducted following the methods specified in 40CFR60, Appendix A and 40CFR51, Appendix M, and USEPA SW-846. Schematics of the test section diagrams are found in Appendix B and schematics of the sampling trains used are included in Appendix C. Calculation nomenclature and sample calculations are included in Appendix D. Laboratory analysis data are found in Appendix E. Copies of analyzer print-outs for each test run are included in Appendix F and field data sheets are found in Appendix G.

The following methodologies were used during the test program:

Method 1 Sample and Velocity Traverse Determination

Test measurement points were selected in accordance with Method 1, 40 CFR, Part 60, Appendix A. The characteristics of the measurement location are summarized below.

TEST POINT INFORMATION				
Location	Upstream Diameters	Downstream Diameters	Test Parameter	Number of Sampling Points
STRU1	0.5	2.0	Cr^{+6}, Asbestos, D/F, PCB	24
			Hg	3
			VOC	1
			Volumetric Flow	16

Method 2 Volumetric Flow Rate Determination

Gas velocity was measured following Method 2, 40CFR, Appendix A, for purposes of calculating stack gas volumetric flow rate and emission rates on a lb/hr basis. An S-type pitot tube, differential pressure gauge, thermocouple and temperature readout were used to determine gas velocity at each sample point. All of the equipment used was calibrated in accordance with the specifications of the Method. Calibration data are presented in Appendix H.

© Mostardi Platt

Method 3A Oxygen (O_2)/Carbon Dioxide (CO_2) Determination

Stack gas molecular weight was determined in accordance with Method 3A, 40CFR60, Appendix A. An ECOM analyzer was used to determine stack gas oxygen and carbon dioxide content and, by difference, nitrogen content. All of the equipment used was calibrated in accordance with the specifications of the Method. Calibration data are presented in Appendix H and copies of the gas cylinder certifications are found in Appendix I.

Asbestos Determination

Stack gas asbestos concentrations and emission rates were sampled in accordance with Method 5, and analyzed by transmission electron microscopy (TEM) according to a modified Yamate Level II method. An Environmental Supply Company sampling train was used to sample stack gas at an isokinetic rate, as specified in the Method. Asbestos in the sample probe was recovered using an acetone rinse. The probe wash and filter catch were analyzed by Maxxam Analytics in accordance with the Yamate Level II method. Laboratory analysis data are found in Appendix E. All of the equipment used was calibrated in accordance with the specifications of the Method. Calibration data are presented in Appendix H.

Method 9 Visible Emissions Determination

Visible emissions were determined in accordance with Method 9, 40CFR60, Appendix A. The observer stood at a distance providing a clear view of the emissions with the sun oriented in the 140° sector to his back. As much as possible, the line of vision was approximately perpendicular to the plume direction.

Visible emissions observations were made at the point of greatest opacity in the portion of the plume where condensed water vapor was not present. Observations were made at 15-second intervals for the duration of the test run.

Visible emissions observations were conducted and recorded by Mr. A. Lawrence Sorce of Mostardi Platt, who is a certified visible emissions observer. Visible emissions data and the reader certification are found in Appendix I.

Method 23 Dioxin and Furan and Polychlorinated Biphenyl Determination

Stack gas dioxin and furan and polychlorinated biphenyls concentrations and emission rates were determined in accordance with Method 23, 40 CFR, Part 60, Appendix A. An Environmental Supply Company sampling train was used to sample for concentrations of dioxins and furans, in the manner specified in the Method.

The PCBs were analyzed by Method 0010 PCB Congeners Method M1668C.

After recovery, samples were analyzed by ALS Life Sciences of Burlington, Ontario, Canada following the procedures specified in the Method. Laboratory analysis data is found in Appendix E. All of the equipment used was calibrated in accordance with the specifications of the Method. Calibration data is presented in Appendix H.

© Mostardi Platt

Methods 25A and 18 Volatile Organic Compound (VOC) Determination

Methane (CH_4) and non-methane hydrocarbon (NMHC) concentrations and emission rates were determined in accordance with 40CFR60, Appendix A. A Thermo Scientific Model 55i Direct Methane, Non-Methane Hydrocarbon Analyzer was used to determine methane and non-methane concentrations. Stack gas was delivered to the system via a Teflon® sampling line, heated to a minimum temperature of 250°F.

The system was calibrated before and after each test run using certified calibration gases of propane for the NMHC determination and methane calibration gases for CH_4 determination. Calibration data are presented in Appendix H. Copies of the gas cylinder certifications are found in Appendix I.

Mercury Determination by Method 30B (Sorbent Trap Method)

Paired trains were utilized sampling three test points per test run.

Per Method 30B sampling, each sample was collected on the paired in-situ sorbent traps. A tube of silica was used to capture remaining moisture prior to the sample reaching the gas metering system.

The sample train used for this test program was designed by APEX, Inc. and meets all requirements for Method 30B sampling. Samples were analyzed onsite utilizing an Ohio Lumex, Inc. analyzer for total gaseous mercury. Mercury quality assurance and control data are found in Appendix J. All of the equipment used was calibrated in accordance with the specifications of the Method. Calibration data are presented in Appendix H.

Method 0061 Hexavalent Chromium Determination

The Cr+6 emissions were collected isokinetically from the source. To eliminate the possibility of Cr+6 reduction between the nozzle and impinger, the emission samples were collected with a recirculatory train where the impinger reagent was continuously recirculated to the nozzle. Recovery procedures included a post-sampling purge and filtration. The impinger train samples were analyzed for Cr+6 by an ion chromatograph equipped with a post-column reactor and a visible wavelength detector. The IC/PCR separated the Cr+6 as chromate (CrO_4) from other diphenylcarbazide reactions that occur in the post-column reactor.

© Mostardi Platt

4.0 TEST RESULT SUMMARIES

Client: Northern Metals, LLC
Facility: Pacific Street Yard
Test Location: Common Stack STRU1
Test Method: 0061

Source Condition	**Normal**	**Normal**	**Normal**	
Date	**8/1/17**	**8/1/17**	**8/1/17**	
Start Time	**8:20**	**12:45**	**15:10**	
End Time	**10:24**	**14:48**	**17:13**	
	Run 1	**Run 2**	**Run 3**	**Average**
Stack Conditions				
Average Gas Temperature, °F	91.3	107.4	102.4	100.4
Flue Gas Moisture, percent by volume	1.6%	3.2%	2.9%	2.6%
Average Flue Pressure, in. Hg	29.25	29.25	29.77	29.42
Gas Sample Volume, dscf	76.661	76.991	78.713	77.455
Average Gas Velocity, ft/sec	68.399	69.364	68.616	68.793
Gas Volumetric Flow Rate, acfm	107,729	109,250	108,072	108,350
Gas Volumetric Flow Rate, dscfm	99,266	96,253	97,997	97,839
Gas Volumetric Flow Rate, scfm	100,876	99,398	100,953	100,409
Average %CO_2 by volume, dry basis	0.0	0.0	0.0	0.0
Average %O_2 by volume, dry basis	20.7	20.8	20.9	20.8
Isokinetic Variance	101.2	104.8	105.3	103.8
Hexavalent Chromium Emissions				
ug of sample collected	1.55	1.25	0.95	1.25
ppm	0.00033	0.00027	0.00020	0.00027
lb/hr	0.000265	0.000207	0.000156	0.000209
lb/yr (based on 3,778 annual operating hours)	1.00	0.78	0.59	0.79

© Mostardi Platt

Client: Northern Metals, LLC
Facility: Pacific Street Yard
Test Location: Common Stack STRU1
Test Method: Asbestos sampled by USEPA Method 5 and Analyzed by TEM Modified Yamate Level II Method

Source Condition	**Normal**	**Normal**	**Normal**	
Date	**7/26/17**	**7/26/17**	**7/27/17**	
Start Time	**7:55**	**12:50**	**10:05**	
End Time	**11:33**	**16:25**	**13:35**	
	Run 1	**Run 2**	**Run 3**	**Average**
Stack Conditions				
Average Gas Temperature, °F	98.7	103.1	99.5	100.4
Flue Gas Moisture, percent by volume	3.4%	4.2%	3.4%	3.7%
Average Flue Pressure, in. Hg	29.81	29.81	29.18	29.60
Gas Sample Volume, dscf	110.518	78.112	78.821	89.150
Average Gas Velocity, ft/sec	66.901	68.850	69.316	68.356
Gas Volumetric Flow Rate, acfm	105,370	108,440	109,174	107,661
Gas Volumetric Flow Rate, dscfm	95,857	97,039	97,058	96,651
Gas Volumetric Flow Rate, scfm	99,236	101,316	100,486	100,346
Average %CO_2 by volume, dry basis	0.0	0.0	0.0	0.0
Average %O_2 by volume, dry basis	20.8	20.8	20.9	20.8
Isokinetic Variance	103.9	102.0	102.9	102.9
Asbestos Emissions				
Counts	0	0	0	0
lb/hr	0.000	0.000	0.000	0.000

© Mostardi Platt

Method 30B (Sorbent Trap) Mercury Test Results Summary
Northern Metals, LLC
Pacific Street Yard Facility
Common Stack STRU1

Test No.	Date	Start Time	End Time	V_m (standard L)	ng detected	ppb	ug/dscm	ug/wscm	oz/hr	lb/hr
1A	8/1/2017	9:47	10:47	30.197	28.3	0.112	0.937	0.922	0.006	0.0003
1B				28.626	30.9	0.129	1.079	1.062	0.006	0.0004
Average					29.6	0.121	1.008	**0.992**	0.010	**0.0004**
2A	8/1/2017	11:14	12:14	32.264	60.8	0.226	1.884	1.854	0.011	0.0007
2B				31.683	58.3	0.221	1.840	1.811	0.011	0.0007
Average					59.6	0.223	1.862	**1.832**	0.010	**0.0007**
4A	8/1/2017	15:10	16:10	30.505	26.6	0.105	0.872	0.847	0.005	0.0003
4B				30.662	26.2	0.102	0.854	0.830	0.005	0.0003
Average					26.4	0.103	0.863	**0.838**	0.010	**0.0003**
Runs 1, 2, and 4 Average										**0.0005**

Hg emissions are based on Runs 1, 2, and 4 as Run 3 did not meet the Method 30B QA/QC acceptance criteria
Volumetric flows to calculate emissions on a lb/hr basis were determined during concurrect Method 0061 testing

© Mostardi Platt

Company: Northern Metals, LLC
Plant: Pacific Street Yard
Test Location: Common Stack STRU1
Test Method: 23

Source Condition	Normal	Normal	Normal	
Date	7/26/17	7/27/17	8/1/17	
Start Time	10:00	7:20	9:35	Runs
End Time	15:15	12:27	13:44	1, 2, and 4
	Run 1	Run 2	Run 4	Average
Stack Conditions				
Average Gas Temperature, °F	104.0	100.4	102.4	102.3
Flue Gas Moisture, percent by volume	3.6%	3.3%	2.8%	3.2%
Average Flue Pressure, in. Hg	29.81	29.18	29.25	29.41
Gas Sample Volume, dscf	189.952	190.986	195.836	192.258
Average Gas Velocity, ft/sec	65.512	65.496	67.213	66.074
Gas Volumetric Flow Rate, acfm	103,182	103,157	105,862	104,067
Gas Volumetric Flow Rate, dscfm	92,768	91,641	94,415	92,941
Gas Volumetric Flow Rate, scfm	96,250	94,796	97,183	96,076
Average %CO_2 by volume, dry basis	0.0	0.0	0.0	0.0
Average %O_2 by volume, dry basis	20.8	20.8	20.8	20.8
Isokinetic Variance	100.7	102.5	102.0	101.7
PCDD/PCDF Emissions				
ng/dscm	0.38	0.59	0.40	0.46
lb/hr	7.15E-10	2.96E-09	1.03E-09	1.57E-09
lb/yr (based on 3,778 annual operating hours)	2.70E-06	1.12E-05	3.87E-06	5.92E-06
PCB Emissions				
ng/dscm	37923.67	44375.15	34980.94	39093.25
lb/hr	0.013	0.015	0.012	0.014
lb/yr (based on 3,778 annual operating hours)	49.78	57.55	46.74	51.36

© Mostardi Platt

Northern Metals, LLC Pacific Street Yard Facility Common Stack STRU1 VOC Summary								
Test No.	**Date**	**Start Time**	**End Time**	**NMHC ppm as C_3H_8 (wet)**	**CH_4 ppm as CH_4 (wet)**	**Moisture, %**	**Flowrate, SCFM**	**VOC as C_3H_8 lb/hr**
1	08/02/17	08:20	09:19	44.1	2.8	2.8	100,136	30.26
2	08/02/17	09:45	10:44	71.8	3.3	2.7	98,495	48.46
3	08/02/17	11:10	12:09	59.0	2.9	2.7	98,764	39.93
Average				58.3	3.0	2.7	99,132	39.55

© Mostardi Platt

5.0 CERTIFICATION

MOSTARDI PLATT is pleased to have been of service to Northern Metals, LLC. If you have any questions regarding this test report, please do not hesitate to contact us at 630-993-2100. A copy of the test plan, and test plan approval are included in Appendix J.

CERTIFICATION

As project manager, I hereby certify that this test report represents a true and accurate summary of emissions test results and the methodologies employed to obtain those results, and the test program was performed in accordance with the methods specified in this test report.

MOSTARDI PLATT

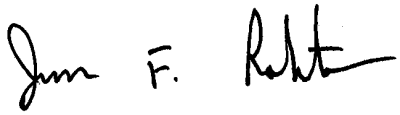

_____ Project Manager

James Robertson

_____ Quality Assurance

Jeffrey M. Crivlare

© Mostardi Platt

APPENDICES

© Mostardi Platt

Appendix A - Plant Operating Data

© Mostardi Platt

Northern Metals
Shredder Throughput Calculations to Support July/August 2017 Performance Test

Worst Case Shredder Throughput (tph)[1]	90% of Worst Case Shredder Throughput (tph)
181.93	163.74

[1]Worst Case conditions were determined from the 90th percentile of shredder tons per hour based on the previous 12 months (July 2016-June 2017) as per Permit Number 05300480-003.

Pollutant Tested: Dioxin/Furan

Run	Date	Start	End time	Duration	Shredder Throughput (tons)	Tons/hr
1[1]	7/26/2017	10:00	15:15	5:15	1,026.6	195.5
2[1]	7/27/2017	7:20	12:17	4:57	848.8	171.5
3	8/1/2017	9:35	13:44	4:09	719.0	173.2
					Average Tons/hr	180.1
					Avg Production rate greater than 90% of Worst Case Scenario?	yes

[1]Shredder throughput based on daily average shredding rate.

Pollutant Tested: Hexavalent Chromium

Run	Date	Start	End time	Duration	Shredder Throughput (tons)	Tons/hr
1	8/1/2017	8:20	10:24	2:04	256.9	124.3
2	8/1/2017	12:45	14:48	2:03	496.6	242.2
3	8/1/2017	15:10	17:33	2:23	420.4	176.4
					Average Tons/hr	181.0
					Avg Production rate greater than 90% of Worst Case Scenario?	yes

Pollutant Tested: Volatile Organic Compounds

Run	Date	Start	End time	Duration	Shredder Throughput (tons)	Tons/hr
1	8/2/2017	8:20	9:20	1:00	212.2	212.2
2	8/2/2017	9:45	10:45	1:00	179.2	179.2
3	8/2/2017	11:10	12:10	1:00	195.1	195.1
					Average Tons/hr	195.5
					Avg Production rate greater than 90% of Worst Case Scenario?	yes

Prepared for Northern Metals by Trinity Consultants

© Mostardi Platt

Pollutant Tested: Mercury

Run	Date	Start	End time	Duration	Shredder Throughput (tons)	Tons/hr
1	8/2/2017	9:47	10:47	1:00	179.8	179.8
2	8/2/2017	11:14	12:14	1:00	196.1	196.1
3	8/2/2017	15:10	16:10	1:00	146.5	146.5
					Average Tons/hr	174.1
					Avg Production rate greater than 90% of Worst Case Scenario?	yes

Pollutant Tested: Asbestos

Run	Date	Start	End time	Duration	Shredder Throughput (tons)	Tons/hr
1[1]	7/26/2017	7:55	11:33	3:38	710.5	195.5
2[1]	7/26/2017	12:50	16:25	3:35	700.7	195.5
3[1]	7/27/2017	10:05	13:35	3:30	600.2	171.5
					Average Tons/hr	187.5
					Avg Production rate greater than 90% of Worst Case Scenario?	yes

[1]Shredder throughput based on daily average shredding rate.

Daily Throughput of Northern Metals' Shredder

	Total Tons Shredded[2]	Hours of operation[2]	Tons/hr[2]
7/26/2017	1,437.25	7.4	195.5
7/27/2017	1,145.50	6.7	171.5
8/1/2017	1,637.50	9.2	178.6
8/2/2017	1,602.25	9.2	173.6

[2]From Northern Metals' Production Records

Prepared for Northern Metals by Trinity Consultants

© Mostardi Platt

Northern Metals Control Equipment Pressure Drop Readings During July/Aug 2017 Souce Test[1]

Date	Time	Pressure Drop (in H_2O)						Sight Glass Level		Comments
		North Cyclone (-)	South Cyclone (CE001)	North Scrubber (CE005)	South Scrubber (CE004)	North Filter (CE007)	South Filter (CE006)	North Scrubber (CE005)	South Scrubber (CE004)	
7/26/2017	7:16	1.5	2.0	7.0	7.0	3.0	3.8	Between the two lines	Between the two lines	
	7:55	1.9	2.1	6.7	6.7	3.0	4.0	Between the two lines	Between the two lines	
	8:09	1.5	2.0	7.0	7.5	3.0	4.0	Between the two lines	Between the two lines	
	8:16	shredder down						Between the two lines	Between the two lines	Shredder down
	8:52	1.7	2.0	7.0	7.0	3.0	4.0	Between the two lines	Between the two lines	Resumed Testing
	9:05	1.5	2.0	7.0	7.5	3.0	4.0	Between the two lines	Between the two lines	
	9:20	1.5	2.0	7.0	7.5	3.0	4.0	Between the two lines	Between the two lines	
	9:35	1.5	2.0	7.5	8.0	3.0	4.0	Between the two lines	Between the two lines	
	9:50	1.5	1.75	7.5	8.0	3.0	4.0	Between the two lines	Between the two lines	
	10:05	1.5	1.5	7.5	8.5	3.0	4.0	Between the two lines	Between the two lines	
	10:16	shredder down						Between the two lines	Between the two lines	Shredder down
	10:55	1.5	1.8	8.0	7.0	3.0	4.0	Between the two lines	Between the two lines	Resumed Testing
	11:10	1.5	1.8	8.0	7.0	3.0	4.0	Between the two lines	Between the two lines	
	11:25	1.5	1.8	8.5	7.0	3.0	4.0	Between the two lines	Between the two lines	
	11:40	1.5	1.8	8.0	7.5	3.0	4.0	Between the two lines	Between the two lines	
	11:55	1.5	1.8	7.5	7.5	3.0	4.0	Between the two lines	Between the two lines	Shredder down
	12:06	shredder down						Between the two lines	Between the two lines	Resumed Testing
	12:25	1.5	1.5	7.5	7.0	3.0	4.0	Between the two lines	Between the two lines	
	12:40	1.5	1.8	7.5	7.5	3.0	4.0	Between the two lines	Between the two lines	
	12:55	1.5	1.9	7.5	7.5	3.0	4.0	Between the two lines	Between the two lines	
	13:10	1.6	1.8	7.0	7.0	3.0	4.0	Between the two lines	Between the two lines	
	13:25	1.5	1.8	7.0	7.0	3.0	4.0	Between the two lines	Between the two lines	
	13:40	1.5	1.8	7.0	7.0	3.0	4.0	Between the two lines	Between the two lines	
	13:55	1.5	1.8	7.0	7.0	3.0	4.0	Between the two lines	Between the two lines	
	14:05	shredder down						Between the two lines	Between the two lines	Shredder down
	14:12	1.8	1.8	6.5	6.5	3.0	4.0	Between the two lines	Between the two lines	Resumed Testing
	14:14	shredder down						Between the two lines	Between the two lines	Shredder down
	14:35	1.8	1.8	7.0	6.5	3.0	4.0	Between the two lines	Between the two lines	Resumed Testing
	14:50	1.6	1.7	6.9	6.2	3.0	4.0	Between the two lines	Between the two lines	
	15:07	1.8	1.6	6.5	6.2	3.0	4.0	Between the two lines	Between the two lines	
	15:22	1.6	2.0	6.5	6.0	3.0	4.0	Between the two lines	Between the two lines	
	15:37	1.6	2.0	7.0	6.0	3.0	4.0	Between the two lines	Between the two lines	
	15:52	1.8	1.5	6.8	7.0	3.0	4.0	Between the two lines	Between the two lines	
	16:07	1.6	1.5	6.5	7.0	3.0	4.0	Between the two lines	Between the two lines	
	16:22	1.8	1.5	6.2	6.8	3.0	4.0	Between the two lines	Between the two lines	
	16:37	1.6	1.6	6.2	6.8	3.0	4.0	Between the two lines	Between the two lines	
	16:45	1.8	1.6	7.0	6.8	3.0	4.0	Between the two lines	Between the two lines	
7/27/2017	7:06	1.5	2.0	7.2	7.0	3.0	4.0	Between the two lines	Between the two lines	
	7:21	1.5	1.8	7.0	6.8	3.0	4.0	Between the two lines	Between the two lines	
	7:36	1.5	1.8	7.0	7.0	3.0	4.0	Between the two lines	Between the two lines	
	7:51	1.5	1.8	7.0	6.8	3.0	4.0	Between the two lines	Between the two lines	
	8:00	shredder down						Between the two lines	Between the two lines	Shredder down
	8:40	1.5	1.5	6.8	6.2	3.0	4.0	Between the two lines	Between the two lines	Resumed Testing
	8:55	1.5	1.6	6.8	6.5	3.0	4.0	Between the two lines	Between the two lines	
	9:10	1.5	1.8	6.8	6.8	3.0	4.0	Between the two lines	Between the two lines	
	9:25	1.5	1.8	6.8	6.8	3.0	4.0	Between the two lines	Between the two lines	
	9:40	1.5	1.5	6.8	6.8	3.0	4.0	Between the two lines	Between the two lines	
	9:55	1.5	1.5	7.0	7.0	3.0	4.0	Between the two lines	Between the two lines	
	10:13	1.5	1.6	6.8	6.8	3.0	4.0	Between the two lines	Between the two lines	
	10:28	1.5	1.5	6.8	6.8	3.0	4.0	Between the two lines	Between the two lines	
	10:44	1.5	1.6	6.8	6.8	3.0	4.0	Between the two lines	Between the two lines	
	10:59	1.5	1.6	6.8	6.5	3.0	4.0	Between the two lines	Between the two lines	
	11:14	1.5	1.6	6.7	6.0	3.0	4.0	Between the two lines	Between the two lines	Shredder down
	11:25	shredder down						Between the two lines	Between the two lines	Resumed Testing
	11:41	1.5	1.5	7.0	6.4	3.0	4.0	Between the two lines	Between the two lines	Shredder down
	11:46	shredder down						Between the two lines	Between the two lines	Resumed Testing
	11:52	2.0	1.5	6.8	6.8	3.0	4.0	Between the two lines	Between the two lines	

© Mostardi Platt

Date	Time	Pressure Drop (in H_2O)						Sight Glass Level		Comments
		North Cyclone (-)	South Cyclone (CE001)	North Scrubber (CE005)	South Scrubber (CE004)	North Filter (CE007)	South Filter (CE006)	North Scrubber (CE005)	South Scrubber (CE004)	
7/27/2017	12:07	1.5	1.5	7.0	6.0	3.0	4.0	Between the two lines	Between the two lines	
	12:22	2.0	1.5	6.5	7.0	3.0	4.0	Between the two lines	Between the two lines	
	12:37	1.8	1.5	6.8	6.0	3.0	4.0	Between the two lines	Between the two lines	
	12:52	1.8	1.5	6.8	6.5	3.0	4.0	Between the two lines	Between the two lines	
	13:07	1.8	1.5	6.5	6.5	3.0	4.0	Between the two lines	Between the two lines	
	13:22	1.8	1.5	6.5	6.8	3.0	4.0	Between the two lines	Between the two lines	
	13:39	2.0	1.5	6.8	6.0	3.0	4.0	Between the two lines	Between the two lines	
	13:55	2.0	1.8	7.0	6.5	3.0	4.0	Between the two lines	Between the two lines	
	14:10	1.8	1.5	6.8	6.5	3.0	4.0	Between the two lines	Between the two lines	
	14:25	1.8	1.5	6.8	6.2	3.0	4.0	Between the two lines	Between the two lines	Shredder down
	14:32	shredder down						Between the two lines	Between the two lines	Resumed Testing
	14:55	1.8	1.5	6.2	6.2	3.0	4.0	Between the two lines	Between the two lines	
	15:12	1.5	1.5	6.8	6.2	3.0	4.0	Between the two lines	Between the two lines	
	15:25	shredder down						Between the two lines	Between the two lines	
8/1/2017	7:16	1.5	4.5	7.0	6.8	3.0	4.0	Between the two lines	Between the two lines	Initial Reading
	8:20	1.5	5.0	6.5	5.8	3.0	4.0	Between the two lines	Between the two lines	Testing began
	8:35	1.5	4.5	7.0	5.8	3.0	4.0	Between the two lines	Between the two lines	
	8:50	1.5	4.0	6.8	6.0	3.0	4.0	Between the two lines	Between the two lines	
	9:05	1.5	4.0	6.0	6.0	3.0	4.0	Between the two lines	Between the two lines	
	9:20	1.5	4.0	6.8	6.2	3.0	4.0	Between the two lines	Between the two lines	
	9:35	1.5	3.0	6.5	6.5	3.0	4.0	Between the two lines	Between the two lines	
	9:50	1.5	3.0	6.5	6.5	3.0	4.0	Between the two lines	Between the two lines	
	10:05	1.5	3.0	6.8	6.8	3.0	4.0	Between the two lines	Between the two lines	
	10:20	1.5	2.5	6.2	6.5	3.0	4.0	Between the two lines	Between the two lines	
	10:35	1.5	2.5	7.0	6.5	3.0	4.0	Between the two lines	Between the two lines	
	10:50	1.5	2.5	6.2	6.0	3.0	4.0	Between the two lines	Between the two lines	
	11:05	1.5	2.5	6.8	6.2	3.0	4.0	Between the two lines	Between the two lines	
	11:20	1.5	2.5	6.5	6.2	3.0	4.2	Between the two lines	Between the two lines	
	11:35	1.5	2.8	7.0	5.8	3.5	4.5	Between the two lines	Between the two lines	
	11:50	1.5	2.5	6.5	6.8	3.5	4.5	Between the two lines	Between the two lines	
	12:05	1.5	2.5	6.8	6.2	3.5	4.5	Between the two lines	Between the two lines	
	12:20	1.5	2.5	6.8	6.2	3.5	4.5	Between the two lines	Between the two lines	
	12:35	1.5	2.5	6.8	6.2	3.5	4.2	Between the two lines	Between the two lines	
	12:50	1.5	2.5	6.5	6.2	3.5	4.2	Between the two lines	Between the two lines	
	13:05	1.5	2.5	6.2	5.8	3.5	4.2	Between the two lines	Between the two lines	
	13:20	1.5	2.5	6.2	6.8	3.5	4.2	Between the two lines	Between the two lines	
	13:35	1.5	2.8	7.5	6.8	3.5	4.5	Between the two lines	Between the two lines	
	13:50	1.5	2.5	7.2	6.5	3.5	4.5	Between the two lines	Between the two lines	
	14:05	1.2	2.5	7.0	6.0	3.5	4.5	Between the two lines	Between the two lines	
	14:20	1.0	2.5	7.0	5.8	3.5	4.5	Between the two lines	Between the two lines	
	14:35	1.2	2.5	7.0	7.0	3.5	4.5	Between the two lines	Between the two lines	
	14:50	1.5	2.8	6.5	6.5	3.5	4.5	Between the two lines	Between the two lines	
	15:00	shredder down						Between the two lines	Between the two lines	Shredder down
	15:10	1.5	3.0	6.5	5.5	3.5	4.5	Between the two lines	Between the two lines	Resumed Testing
	15:25	1.5	2.5	6.5	6.8	3.5	4.5	Between the two lines	Between the two lines	
	15:40	1.5	2.6	6.5	6.0	3.5	4.5	Between the two lines	Between the two lines	
	15:55	1.5	3.0	6.2	6.0	3.5	4.5	Between the two lines	Between the two lines	
	16:10	1.8	3.0	6.0	6.5	3.5	4.5	Between the two lines	Between the two lines	
	16:30	1.5	3.0	6.5	6.0	3.5	4.5	Between the two lines	Between the two lines	
	16:45	1.5	3.0	6.8	6.0	3.5	4.5	Between the two lines	Between the two lines	
	17:00	1.5	3.2	6.8	6.0	3.5	4.5	Between the two lines	Between the two lines	
	17:15	1.5	3.0	6.2	6.0	3.5	4.5	Between the two lines	Between the two lines	
8/2/2017	7:32	1.5	2.5	6.8	6.0	3.5	4.5	Between the two lines	Between the two lines	Initial Reading
	8:20	1.2	2.0	8.0	8.0	3.5	4.0	Between the two lines	Between the two lines	Testing began
	8:35	1.0	2.0	8.5	8.0	3.5	4.0	Between the two lines	Between the two lines	
	8:50	1.2	2.0	8.2	8.0	3.5	4.0	Between the two lines	Between the two lines	
	9:05	1.5	2.0	7.5	7.5	3.5	4.0	Between the two lines	Between the two lines	
	9:20	1.5	2.0	7.0	7.5	3.5	4.0	Between the two lines	Between the two lines	
	9:35	1.5	2.0	6.8	7.8	3.5	4.0	Between the two lines	Between the two lines	
	9:45	1.5	2.0	6.8	7.5	3.5	4.0	Between the two lines	Between the two lines	Second test began
	10:00	1.5	2.0	6.8	8.0	3.5	4.0	Between the two lines	Between the two lines	

© Mostardi Platt

Date	Time	Pressure Drop (in H_2O)						Sight Glass Level		Comments
		North Cyclone (-)	South Cyclone (CE001)	North Scrubber (CE005)	South Scrubber (CE004)	North Filter (CE007)	South Filter (CE006)	North Scrubber (CE005)	South Scrubber (CE004)	
8/2/2017	10:15	1.5	2.0	6.5	7.5	3.5	4.0	Between the two lines	Between the two lines	
	10:30	1.5	2.0	6.8	7.2	3.5	4.0	Between the two lines	Between the two lines	
	10:45	1.5	2.0	6.8	7.0	3.5	4.0	Between the two lines	Between the two lines	
	11:00	1.5	2.0	6.5	7.0	3.5	4.0	Between the two lines	Between the two lines	
	11:10	1.5	2.0	6.5	7.0	3.5	4.0	Between the two lines	Between the two lines	Third test began
	11:25	1.5	2.0	6.8	6.8	3.5	4.0	Between the two lines	Between the two lines	
	11:40	1.5	2.0	6.8	6.2	3.5	4.0	Between the two lines	Between the two lines	
	11:55	1.5	2.0	6.5	6.0	3.5	4.0	Between the two lines	Between the two lines	
	12:10	1.5	2.0	6.8	7.2	3.5	4.0	Between the two lines	Between the two lines	
	Max Reading	2.0	5.0	8.5	8.5	3.5	4.5			
	Min Reading	1.0	1.5	6.0	5.5	3.0	3.8			
	Permitted Rang	1.0-11.0	1.0-11.0	4.0-9.0	4.0-9.0	1.8-8.0	2.0-8.0			
		Within Permitted Ranges	Within Permitted Ranges	Within Permitted Ranges	Within Permitted Ranges	Within Permitted Ranges	Within Permitted Range			

[1]Readings of Control Equipment are to satisfy Minn. R. 7017.2035, subp. 3; Minn. R. 7007.0800, subp. 2 from permit number 05300480-003

[2]Control Equipment ranges from Permit Number 05300480-003

Prepared for Northern Metals by Trinity Consultants

© Mostardi Platt

Appendix B - Test Section Diagram

 © Mostardi Platt

EQUAL AREA TRAVERSE FOR ROUND DUCTS

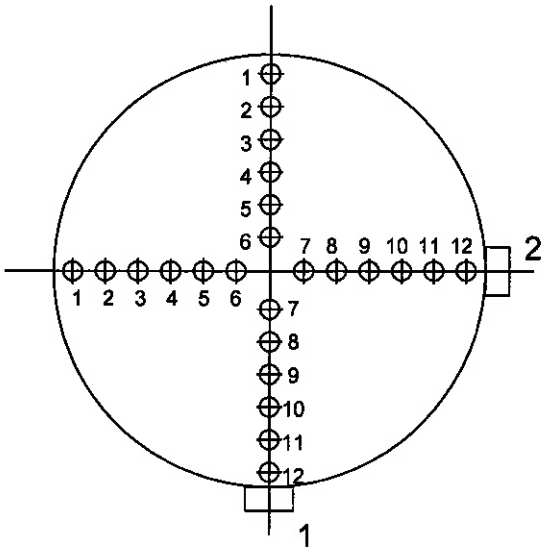

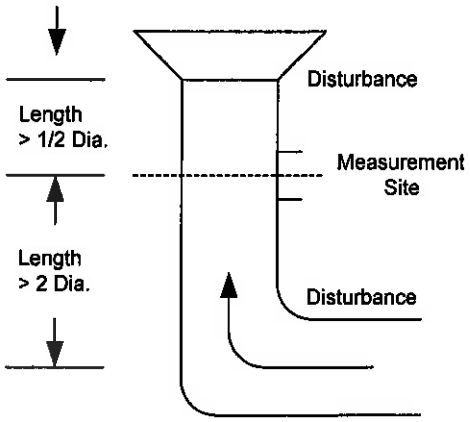

Job:	Northern Metals, LLC Pacific Street Yard Facility 2800 Pacific Street North
Date:	July 26 and 27, 2017 and August 1 and 2, 2017
Test Location:	Common Stack (STRU1)
Stack Diameter:	5.78125 Feet
Stack Area:	26.250 Square Feet
No. Points Across Diameter:	12
No. of Ports:	2
Port Length:	6.50 in.

© Mostardi Platt

MERCURY TRAVERSE FOR ROUND DUCTS

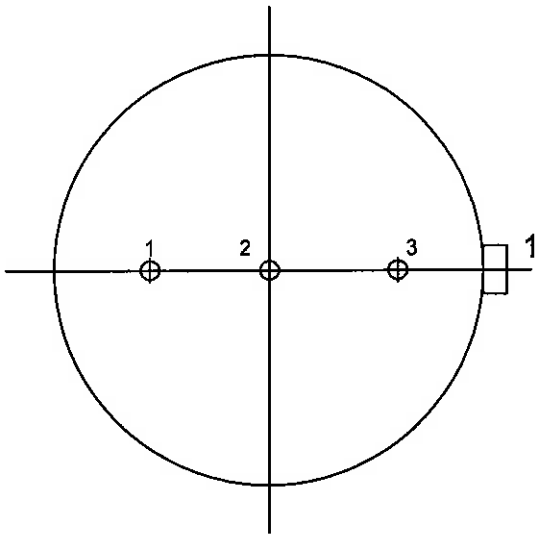

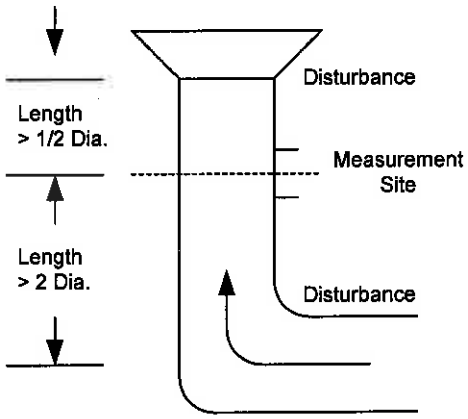

Job:	Northern Metals, LLC Pacific Street Yard Facility 2800 Pacific Street North
Date:	August 1, 2017
Test Location:	Common Stack (STRU1)
Stack Diameter:	5.78125 Feet
Stack Area:	26.250 Square Feet
No. Sample Points:	3
Port Length:	6.50 in.

© Mostardi Platt

VOC SAMPLING STRATEGY FOR ROUND DUCTS

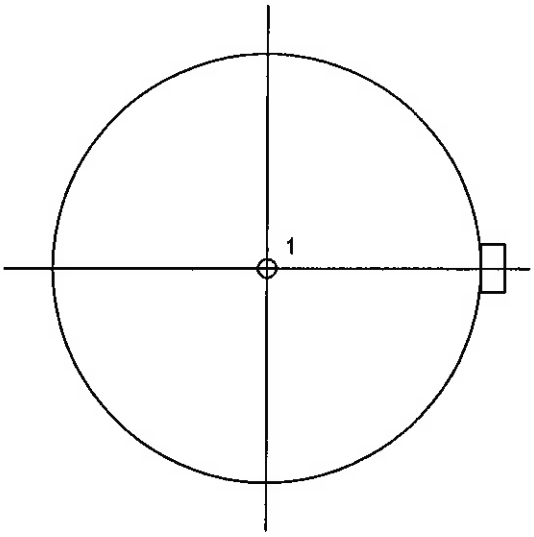

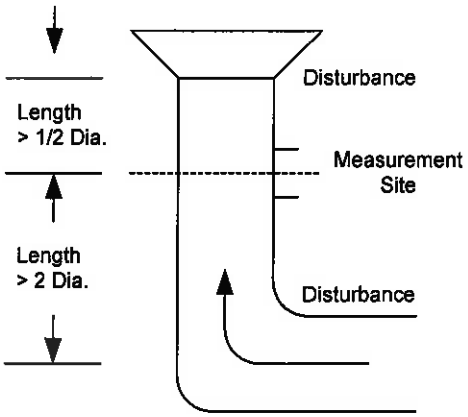

Job:	Northern Metals, LLC Pacific Street Yard Facility 2800 Pacific Street North
Date:	August 2, 2017
Test Location:	Common Stack (STRU1)
Stack Diameter:	5.78125 Feet
Stack Area:	26.250 Square Feet
No. Sample Points:	1
Port Length:	6.50 in.

© Mostardi Platt

VOLUMETRIC FLOW EQUAL AREA TRAVERSE FOR ROUND DUCTS

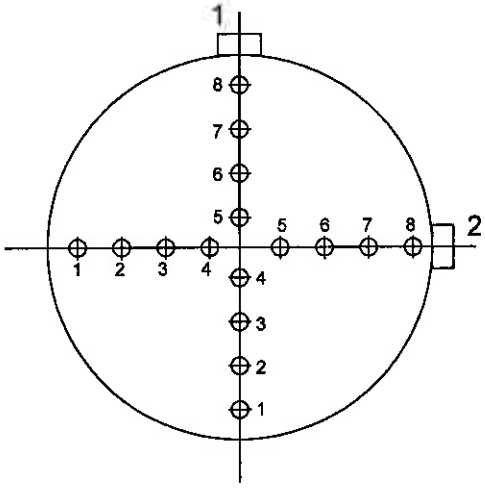

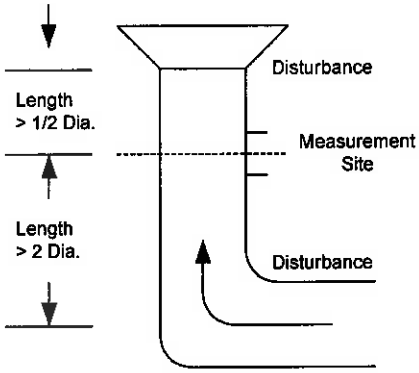

Job:	Northern Metals, LLC Pacific Street Yard Facility 2800 Pacific Street North
Date:	August 2, 2017
Test Location:	Common Stack (STRU1)
Stack Diameter:	5.78125 Feet
Stack Area:	26.250 Square Feet
No. Points Across Diameter:	8
No. of Ports:	2
Port Length:	6.50 in.

© Mostardi Platt

Appendix C - Sample Train Diagrams

© Mostardi Platt

USEPA Method 2- Type S Pitot Tube Manometer Assembly

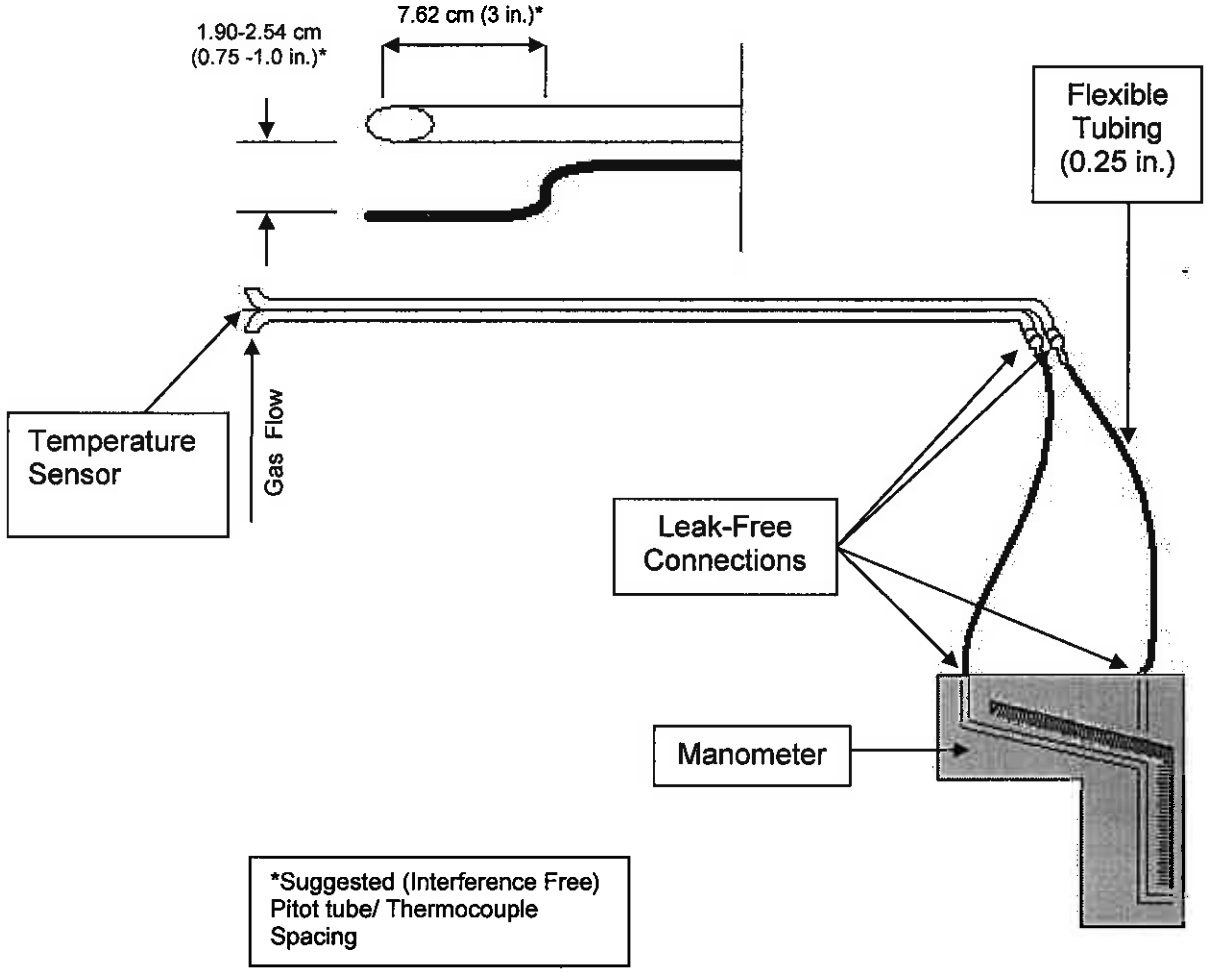

© Mostardi Platt

USEPA Method 3A - Integrated Oxygen/Carbon Dioxide Sample Train Diagram Utilizing ECOM To Measure From Sample Exhaust

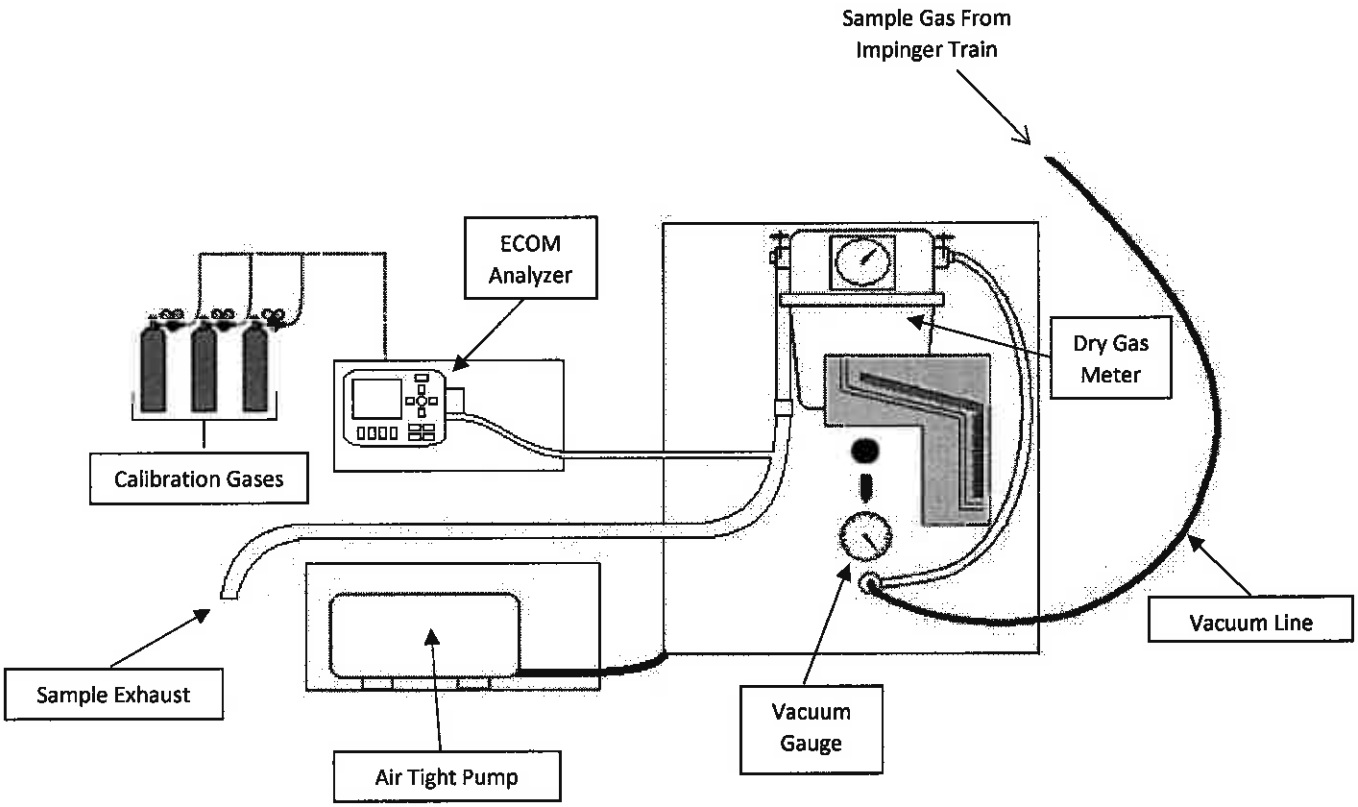

© Mostardi Platt

USEPA Method 4- Moisture Content Sample Train Diagram

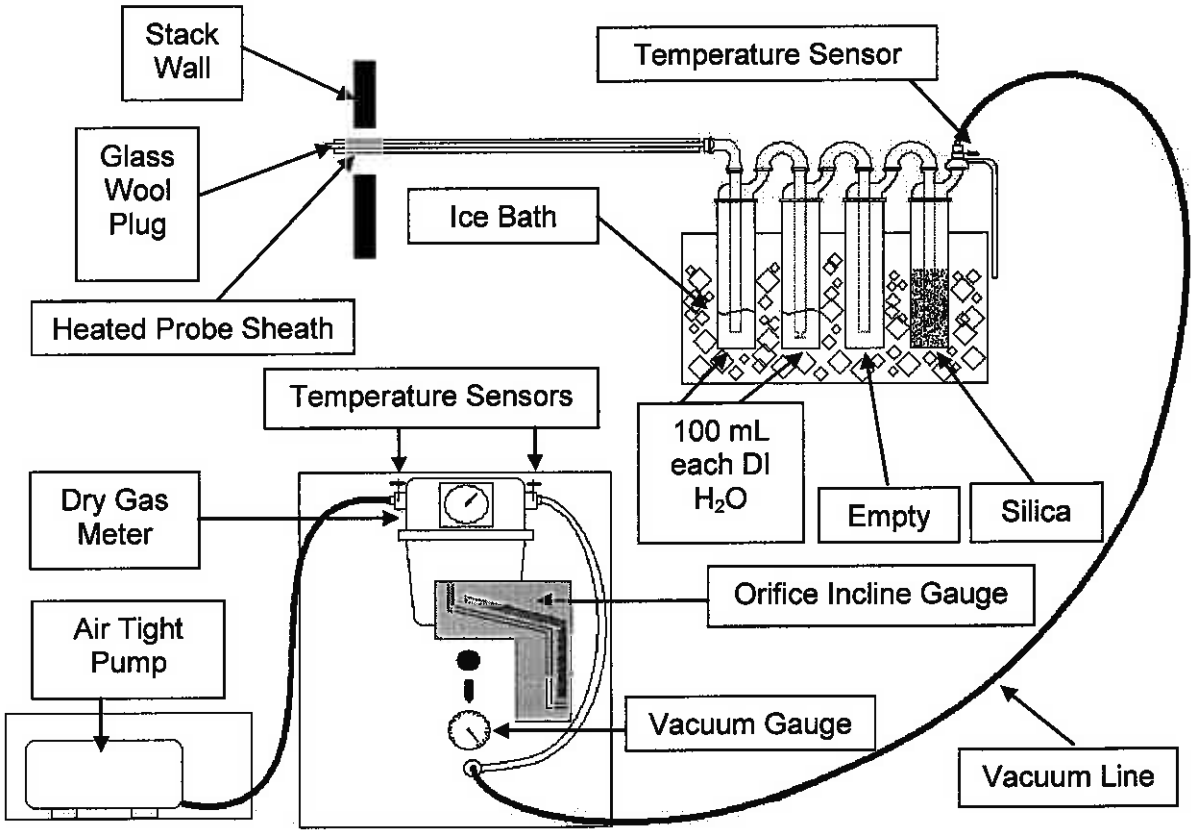

© Mostardi Platt

USEPA Method 5- Asbestos Sample Train Diagram

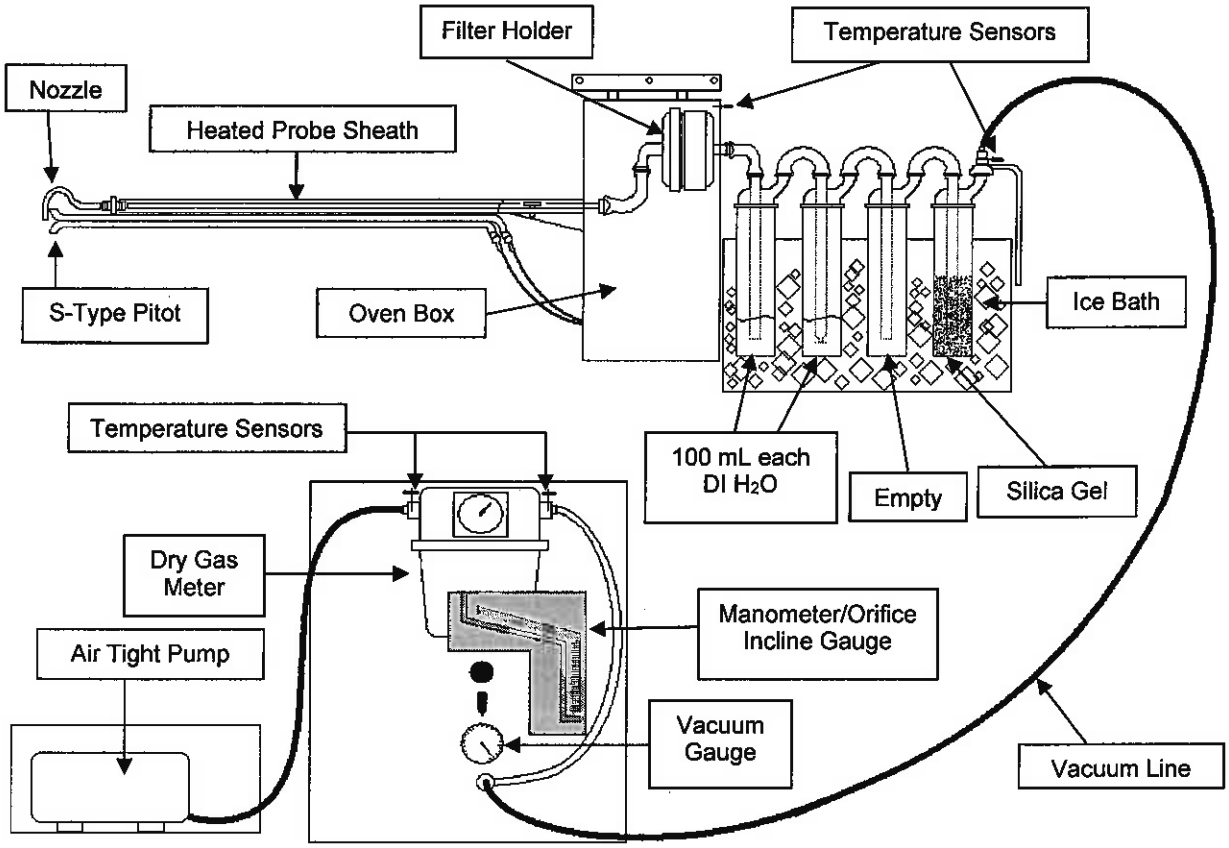

© Mostardi Platt

Method 23 - Determination of Polychlorinated Dibenzo-p-dioxins and Polychlorinated Dibenzofurans from Municipal Waste Combustors

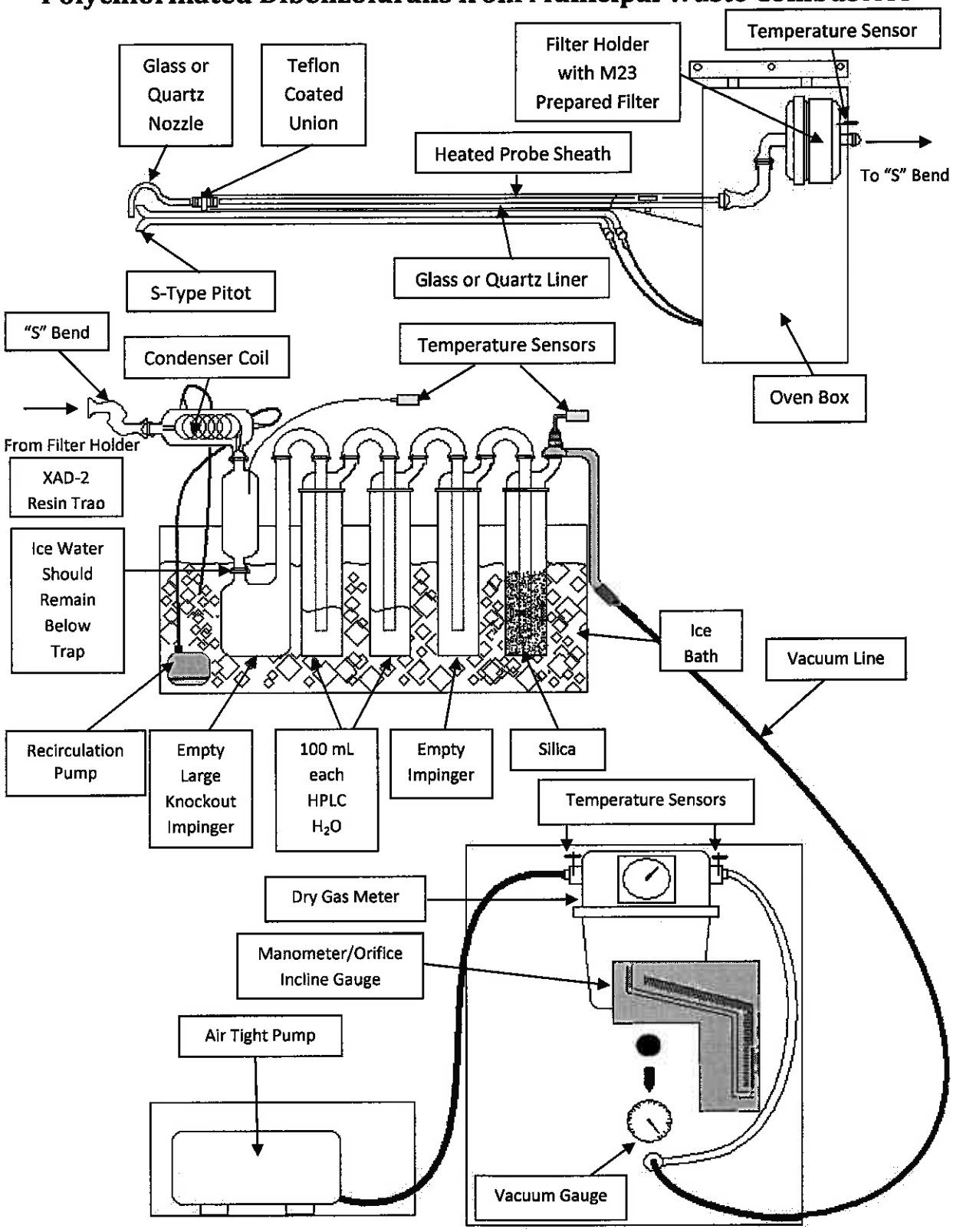

USEPA Method 25A/18 – Methane/Non-Methane Sample Train

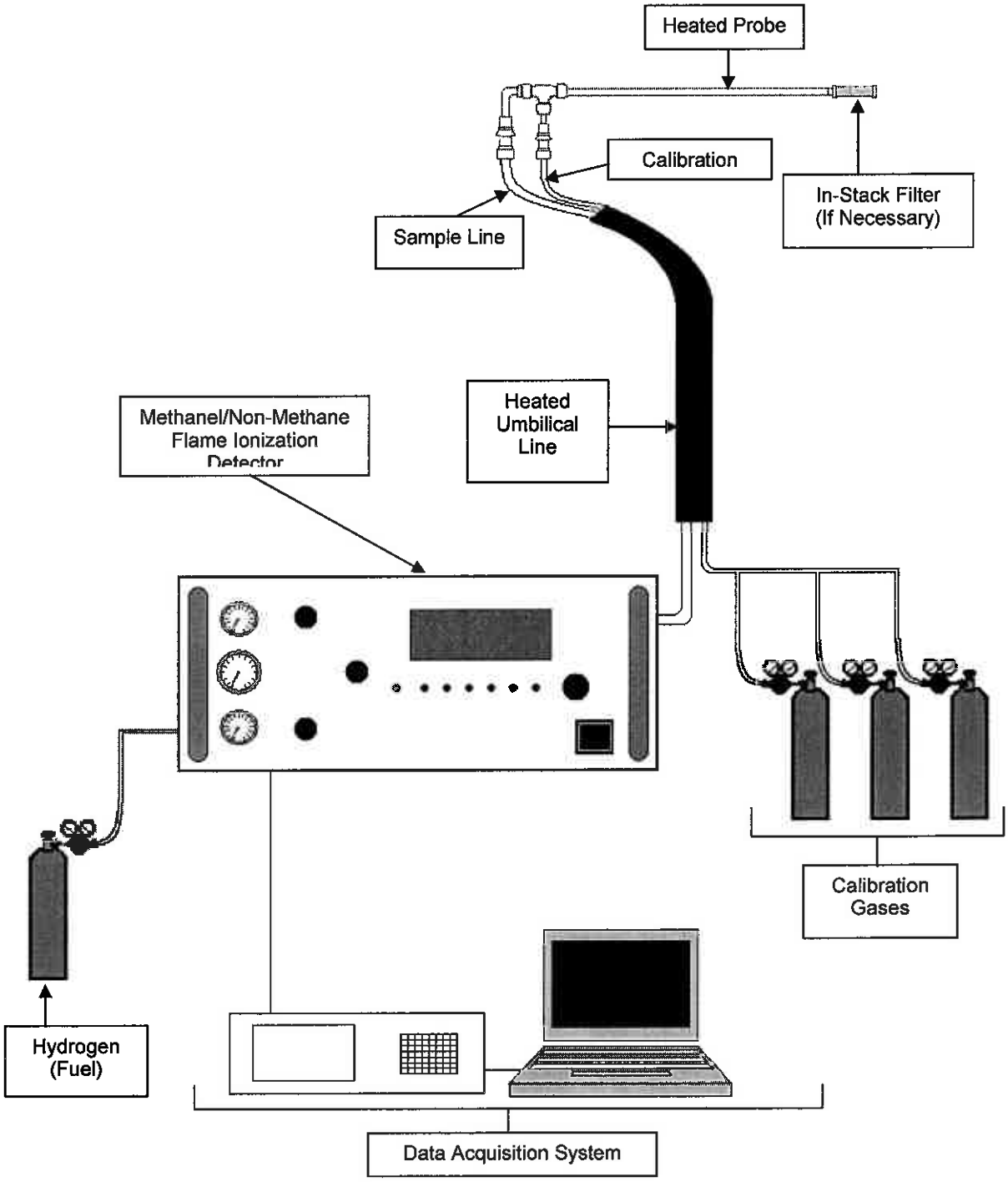

© Mostardi Platt

USEPA Method 30B- Mercury Sorbent Trap Sampling Train

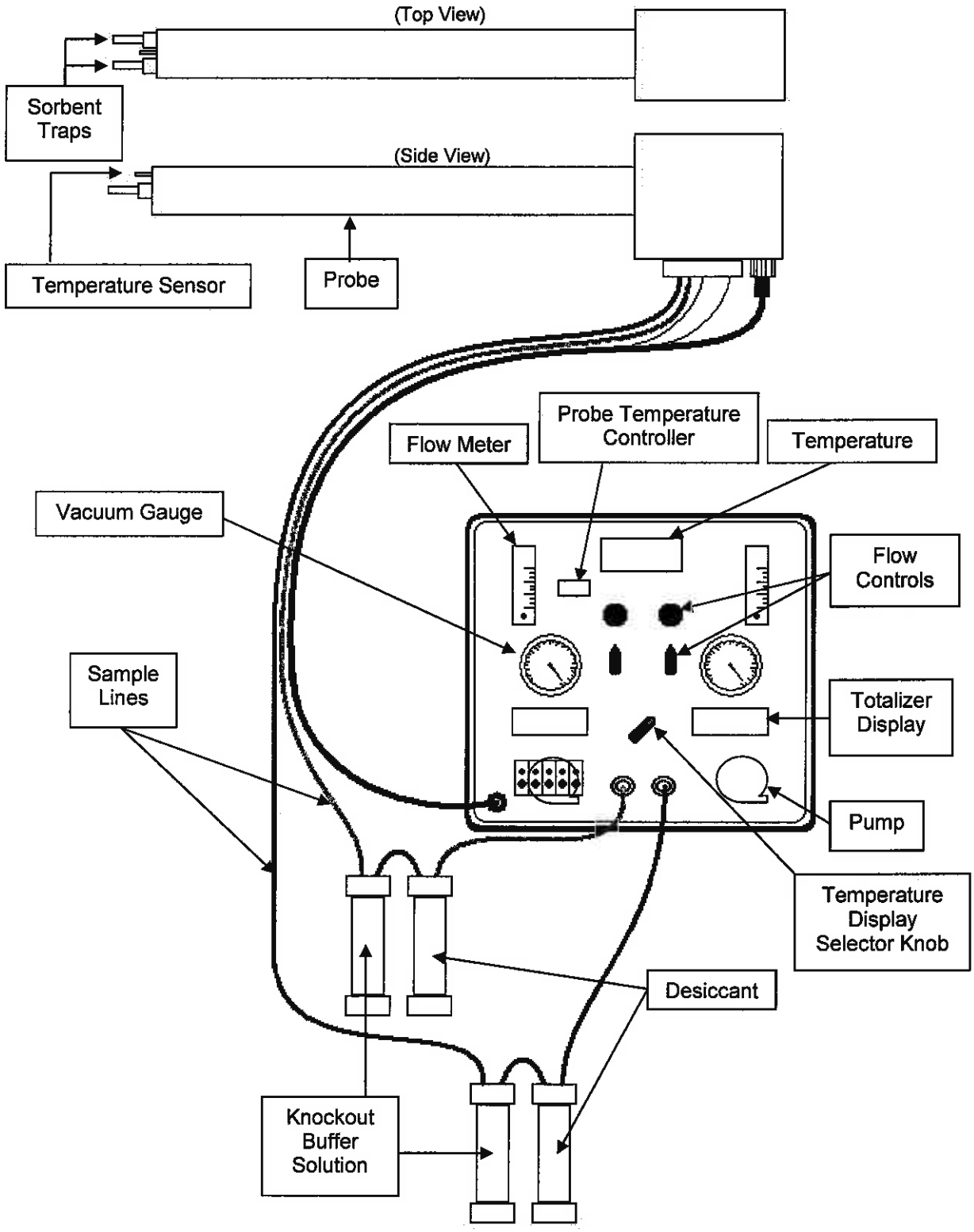

© Mostardi Platt

USEPA Method 0061- Hexavalent Chromium Sample Train Diagram

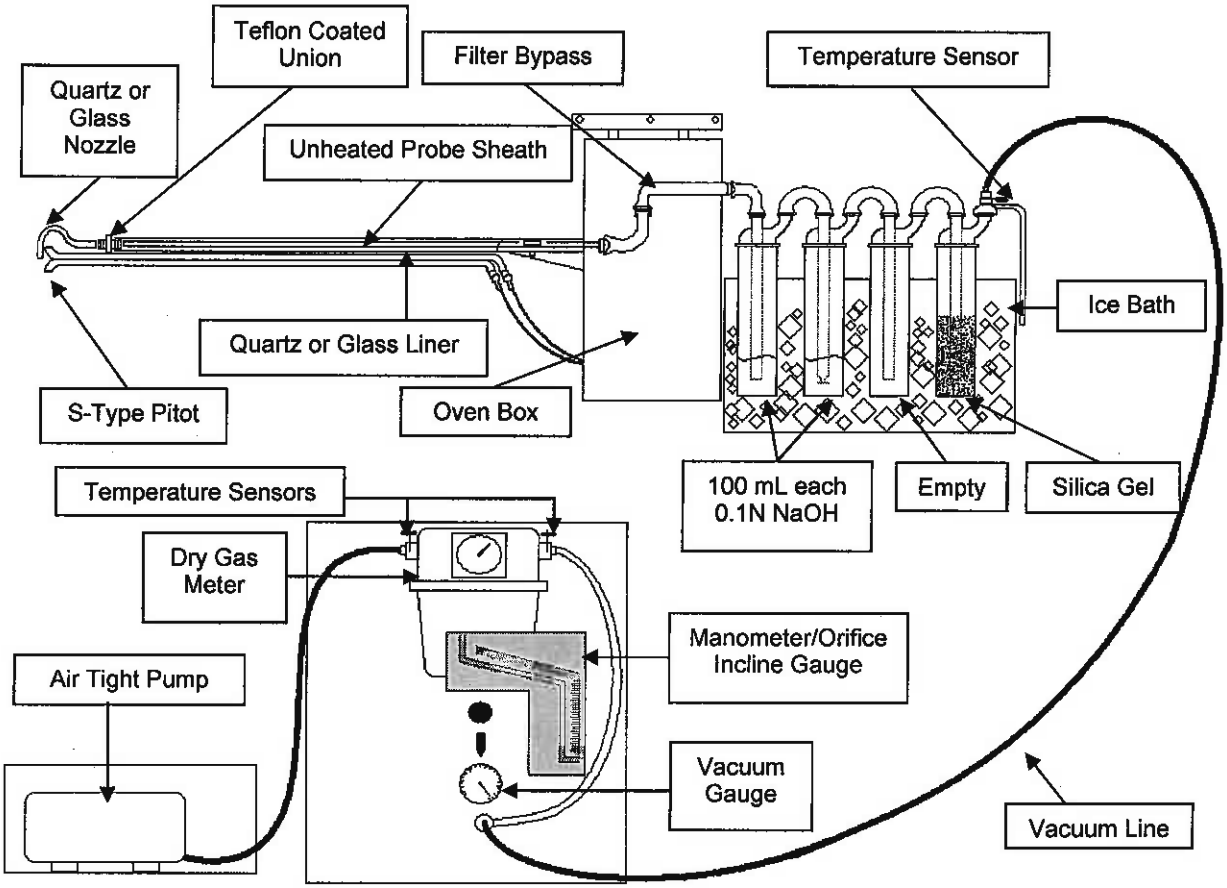

Appendix D - Calculation Nomenclature and Formulas

© Mostardi Platt

Client:	**Northern Metals, LLC**
Plant:	**Pacific Street Yard Facility**
Test Location:	**Common Stack STRU1**
Run:	**1A**
Date:	**8/1/2017**

Mercury Meter Volume at Standard Conditions (Liters)

Vm(std) = **17.647 x Y x Vm x** $\frac{\text{Pbar}}{\text{Tm}}$

Y = **0.998** **Vm =** **32.085**

Tm = **546.60**

Vm(std) = **30.197**

Hg Concentration:

ppb Hg = **(ng of Hg /1x10^{9}) x (0.002046226/Vm(std)*0.0353)*385x10^{6}/200.59*1000**

Total ng Hg = **28.3** **Vm(std) =** 30.197111

ppb Hg = **0.112**

ug/dscm = **(total ng of Hg on trap/1000)/Vm(std)/1000**

ug/dscm = **0.937**

ug/wscm = **ug/dscm*(1-Bws)**

ug/wscm = **0.922**

© Mostardi Platt

Client:	**Northern Metals, LLC**
Facility:	**Pacific Street Yard**
Test Location:	**Common Stack STRU1**
Run:	**1**
Date:	**7/26/2017**
Method:	**Asbestos**
Source Condition:	**Normal**

Dry Molecular Weight

$$Md = 0.44 \times (\%CO_2) + 0.32 \times (\%O_2) + 0.28 \times \%N_2$$

$\%CO_2 =$ 0.0 $\%O_2 =$ 20.8 $\%N_2 =$ 79.2

Md = 28.832

Wet Molecular Weight

$$Ms = Md \times (1-Bws) + (18.0 \times Bws)$$

Md = 28.832 Bws = 0.034

Ms = 28.463

Meter Volume at Standard Conditions

$$Vm(std) = 17.647 \times Y \times Vm \times \frac{(Pbar + DH/13.6)}{Tm}$$

Y = 0.998 Vm = 111.727 Pbar = 29.77

DH = 2.79 Tm = 533.7

Vm(std) = 110.518

Volume of Water Vapor Condensed

$$Vw(std) = 0.0471 \times (\text{net } H_2O \text{ gain})$$

Net H_2O = 82.7

Vw(std) = 3.895

Moisture Content

$$Bws = \frac{Vwc(std)}{Vwc(std) + Vm(std)}$$

Vw(std) = 3.895 Vm(std) = 110.518

Bws = 0.034 0.042216833

© Mostardi Platt

Client:	**Northern Metals, LLC**
Facility:	**Pacific Street Yard**
Test Location:	**Common Stack STRU1**
Run:	**1**
Date:	**7/26/2017**
Method:	**Asbestos**
Source Condition:	**Normal**

Average Duct Velocity

$$Vs = 85.49 \times Cp \times \text{Sqrt DP (avg)} \times (Ts\ (avg) / (Ps \times Ms))^{1/2}$$

Cp = 0.840 Ts (avg) = 558.7 Sqrt DP (avg): 1.148
Ps = 29.81 Ms = 28.463

Vs = 66.901

Volumetric Flow Rate (Actual Basis)

$$Q = Vs \times A \times 60$$

Vs = 66.901 A = 26.250

Q = 105,370

Volumetric Flow Rate (Standard Basis)

$$Qstd = 17.647 \times Q \times \frac{Ps}{Ts\ (avg)}$$

Q = 105,370 Ps = 29.81 Ts (avg) = 558.7

Qstd = 99,236

Volumetric Flow Rate (Standard Dry Basis)

$$Qstd(dry) = Qstd \times (1-Bws)$$

Qstd = 99,236 Bws = 0.034

Qstd(dry) = 95,857

Isokinetic Variation:

$$\%ISO = \frac{0.0945 \times Ts \times Vm(std)}{Vs \times \theta \times An \times Ps \times (1-Bws)}$$

Ts = 558.7 Vm(std) = 110.518 Vs = 66.901
An = 0.0002428 θ = 120 Ps = 29.81
Bws = 0.034

%ISO = 103.9

© Mostardi Platt

Client:	**Northern Metals, LLC**
Facility:	**Pacific Street Yard**
Test Location:	**Common Stack STRU1**
Run:	**1**
Date:	**7/26/2017**
Method:	**Asbestos**
Source Condition:	**Normal**

PM Concentration:
This example represents the filterable fraction. For other fractions, use the obtained mn for that particulate fraction.

$$Co = \frac{m_n \times 15.43}{Vm(std)}$$

m_n (g) = 0.0000 Vm(std) = 110.518

Co = 0.0000 gr/dscf

PM Emission Rate:

$$\text{Emission Rate lb/hr} = \frac{Co}{7{,}000} \times Qstd(dry) \times 60$$

Co = 0.0000 Qstd(dry) = 95,857

Emission Rate lb/hr = 0.000 lb/hr

© Mostardi Platt

Client:	**Northern Metals, LLC**
Facility:	**Pacific Street Yard**
Test Location:	**Common Stack STRU1**
Run:	**1**
Date:	**8/1/2017**
Method:	**0061**
Source Condition:	**Normal**

Dry Molecular Weight

$$Md = 0.44 \times (\%CO_2) + 0.32 \times (\%O_2) + 0.28 \times \%N_2$$

$\%CO_2 =$ 0.0 $\%O_2 =$ 20.7 $\%N_2 =$ 79.3

Md = 28.828

Wet Molecular Weight

$$Ms = Md \times (1-Bws) + (18.0 \times Bws)$$

Md = 28.828 Bws = 0.016

Ms = 28.655

Meter Volume at Standard Conditions

$$Vm(std) = 17.647 \times Y \times Vm \times \frac{(Pbar + DH/13.6)}{Tm}$$

Y = 0.998 Vm = 79.541 Pbar = 29.2

DH = 1.4 Tm = 75.6

Vm(std) = 76.661

Volume of Water Vapor Condensed

$$Vw(std) = 0.0471 \times (\text{net } H_2O \text{ gain})$$

Net H_2O = 26.4

Vw(std) = 1.243

Moisture Content

$$Bws = \frac{Vwc(std)}{Vwc(std) + Vm(std)}$$

Vw(std) = 1.243 Vm(std) = 76.661

Bws = 0.016

© Mostardi Platt

Client:	**Northern Metals, LLC**
Facility:	**Pacific Street Yard**
Test Location:	**Common Stack STRU1**
Run:	**1**
Date:	**8/1/2017**
Method:	**0061**
Source Condition:	**Normal**

Average Duct Velocity

$$Vs = 85.49 \times Cp \times \text{Sqrt DP (avg)} \times (Ts\ (avg) / (Ps \times Ms))^{1/2}$$

Cp =	0.840	Ts (avg) =	551.3	Sqrt DP (avg):	1.174
Ps =	29.25	Ms =	28.655		
Vs =	68.399				

Volumetric Flow Rate (Actual Basis)

$$Q = Vs \times A \times 60$$

Vs =	68.399	A =	26.250
Q =	107,729		

Volumetric Flow Rate (Standard Basis)

$$Qstd = 17.647 \times Q \times \frac{Ps}{Ts\ (avg)}$$

Q =	107,729	Ps =	29.25	Ts (avg) =	551.3
Qstd =	100,876				

Volumetric Flow Rate (Standard Dry Basis)

$$Qstd(dry) = Qstd \times (1-Bws)$$

Qstd =	100,876	Bws =	0.016
Qstd(dry) =	99,266		

Isokinetic Variation:

$$\%ISO = \frac{0.0945 \times Ts \times Vm(std)}{Vs \times \theta \times An \times Ps \times (1-Bws)}$$

Ts =	551.3	Vm(std) =	76.661	Vs =	68.399
An =	0.0001670	θ =	120	Ps =	29.25
Bws =	0.016				
%ISO =	101.2				

© Mostardi Platt

Client:	**Northern Metals, LLC**
Facility:	**Pacific Street Yard**
Test Location:	**Common Stack STRU1**
Run:	**1**
Date:	**8/1/2017**
Method:	**0061**
Source Condition:	**Normal**

Other Concentration:

$$mg/m^3 = \frac{\text{mg of Other}}{Vm(std) \times 0.02832\ m^3/ft^3}$$

mg= 0.00 Vm(std) = 76.661

mg/m^3= 0.00

Other Emission Rate:

$$\text{lb of Other} = \frac{\mu g \text{ of sample} \times 10^{-6}\ grams/\mu g}{453.6\ grams/lb}$$

$$\text{Emission Rate lb/hr} = \frac{\text{lb of Other}}{Vm(std)} \times dscfm \times 60\ min/hr$$

lb of Other = 3.42E-12 dscfm = 99,266

Emission Rate lb/hr = 0.0003

© Mostardi Platt

MOSTARDI PLATT

Volumetric Flow Nomenclature

A = Cross-sectional area of stack or duct, ft2
Bws = Water vapor in gas stream, proportion by volume
Cp = Pitot tube coefficient, dimensionless
Md = Dry molecular weight of gas, lb/lb-mole
Ms = Molecular weight of gas, wet basis, lb/lb-mole
Mw = Molecular weight of water, 18.0 lb/lb-mole
Pbar = Barometric pressure at testing site, in. Hg
Pg = Static pressure of gas, in. Hg (in. H2O/13.6)
DH= Static pressure of gas, in.H2O
Ps = Absolute pressure of gas, in. Hg = Pbar + Pg
Pstd = Standard absolute pressure, 29.92 in. Hg
Acfm = Actual volumetric gas flow rate
Scfm= Volumetric gas flow rate, corrected to standard conditions
Dscfm = Standard volumetric flow rate, corrected to dry conditions
R = Ideal gas constant, 21.85 in. Hg-ft3/°R-lb-mole
Ts = Average stack gas temperature, °F
Tm = Average dry gas meter temperature, oF
Tstd = Standard absolute temperature, 528°R
vs = Gas velocity, ft/sec
Vm(std)= Volume of gas sampled, corrected to standard conditions, scf
Vw(std) = Volume of water vapor in gas sample, corrected to standard conditions, scf
Vlc= Volume of liquid collected
Y = Dry gas meter calibration factor
Δp = Velocity head of gas, in. H2O
K1 = 17.647 °R/in. Hg
%EA = Percent excess air
%CO2 = Percent carbon dioxide by volume, dry basis
%O2 = Percent oxygen by volume, dry basis
%N2 = Percent nitrogen by volume, dry basis
0.264 = Ratio of O2 to N2 in air, v/v
0.28 = Molecular weight of N2 or CO, divided by 100
0.32 = Molecular weight of O2 divided by 100
0.44 = Molecular weight of CO2 divided by 100
13.6 = Specific gravity of mercury (Hg)

© Mostardi Platt

MOSTARDI PLATT

Volumetric Air Flow Calculations

$$Vm\ (std) = 17.647 \times Vm \times \left[\frac{\left(P_{bar} + \left[\frac{DH}{13.6}\right]\right)}{(460 + Tm)}\right] \times Y$$

$$Vw\ (std) = 0.0471 \times Vlc$$

$$Bws = \left[\frac{Vw\ (std)}{Vw\ (std) + Vm\ (std)}\right]$$

$$Md = (0.44 \times \%CO_2) + (0.32 \times \%O_2) + [0.28 \times (100 - \%CO_2 - \%O_2)]$$

$$Ms = Md \times (1 - Bws) + (18 \times Bws)$$

$$Vs = \sqrt{\frac{(Ts + 460)}{Ms \times Ps}} \times \sqrt{DP} \times Cp \times 85.49$$

$$Acfm = Vs \times Area\ (of\ stack\ or\ duct) \times 60$$

$$Scfm = Acfm \times 17.647 \times \left[\frac{Ps}{(460 + Ts)}\right]$$

$$Scfh = Scfm \times 60 \frac{min}{hr}$$

$$Dscfm = Scfm \times (1 - Bws)$$

© Mostardi Platt

MOSTARDI PLATT

Isokinetic Nomenclature

A = Cross-sectional area of stack or duct, square feet
A_n = Cross-sectional area of nozzle, square feet
B_{ws} = Water vapor in gas stream, by volume
C_a = Acetone blank residue concentration, g/g
C_{acf} = Concentration of particulate matter in gas stream at actual conditions, gr/acf
C_p = Pitot tube coefficient
C_s = Concentration of particulate matter in gas stream, dry basis, corrected to standard conditions, gr/dscf
IKV = Isokinetic sampling variance, must be 90.0 % ≤ IKV ≤ 110.0%
M_d = Dry molecular weight of gas, lb/lb-mole
M_s = Molecular weight of gas, wet basis, lb/lb-mole
M_w = Molecular weight of water, 18.0 lb/lb-mole
m_a = Mass of residue of acetone after evaporation, grams
P_{bar} = Barometric pressure at testing site, inches mercury
P_g = Static pressure of gas, inches mercury (inches water/13.6)
P_s = Absolute pressure of gas, inches mercury = $P_{bar} + P_g$
P_{std} = Standard absolute pressure, 29.92 inches mercury
Q_{acfm} = Actual volumetric gas flow rate, acfm
Q_{sd} = Dry volumetric gas flow rate corrected to standard conditions, dscfh
R = Ideal gas constant, 21.85 inches mercury cubic foot/°R-lb-mole
T_m = Dry gas meter temperature, °R
T_s = Gas temperature, °R
T_{std} = Absolute temperature, 528°R
V_a = Volume of acetone blank, ml
V_{aw} = Volume of acetone used in wash, ml
W_a = Weight of residue in acetone wash, grams
m_n = Total amount of particulate matter collected, grams
V_{1c} = Total volume of liquid collected in impingers and silica gel, ml
V_m = Volume of gas sample as measured by dry gas meter, dcf
$V_{m(std)}$ = Volume of gas sample measured by dry gas meter, corrected to standard conditions, dscf
v_s = Gas velocity, ft/sec
$V_{w(std)}$ = Volume of water vapor in gas sample, corrected to standard conditions, scf
Y = Dry gas meter calibration factor
ΔH = Average pressure differential across the orifice meter, inches water
Δp = Velocity head of gas, inches water
ρ_a = Density of acetone, 0.7855 g/ml (average)
ρ_w = Density of water, 0.002201 lb/ml
θ = Total sampling time, minutes
K_1 = 17.647 °R/in. Hg
K_2 = 0.04707 ft^3/ml
K_4 = 0.09450/100 = 0.000945
K_p = Pitot tube constant, $85.49 \frac{ft}{sec}\left[\frac{(lb/lb-mole)(in.\ Hg)}{(°R)(in.\ H_2O)}\right]^{1/2}$
%EA = Percent excess air
$\%CO_2$ = Percent carbon dioxide by volume, dry basis
$\%O_2$ = Percent oxygen by volume, dry basis
%CO = Percent carbon monoxide by volume, dry basis
$\%N_2$ = Percent nitrogen by volume, dry basis
0.264 = Ratio of O_2 to N_2 in air, v/v
28 = Molecular weight of N_2 or CO
32 = Molecular weight of O_2
44 = Molecular weight of CO_2
13.6 = Specific gravity of mercury (Hg)

© Mostardi Platt

MOSTARDI PLATT

Isokinetic Calculation Formulas

1. $V_{w(std)} = V_{lc}\left(\frac{\rho_w}{M_w}\right)\left(\frac{RT_{std}}{P_{std}}\right) = K_2 V_{lc}$

2. $V_{m(std)} = V_m Y \left(\frac{T_{std}}{T_m}\right)\left(\frac{(P_{bar} + (\frac{\Delta H}{13.6}))}{P_{std}}\right) = K_1 V_m Y \frac{(P_{bar} + (\frac{\Delta H}{13.6}))}{T_m}$

3. $B_{ws} = \frac{V_{w(std)}}{(V_{m(std)} + V_{w(std)})}$

4. $M_d = 0.44(\%CO_2) + 0.32(\%O_2) + 0.28(\%N_2)$

5. $M_s = M_d(1 - B_{ws}) + 18.0(B_{ws})$

6. $C_a = \frac{m_a}{V_a \rho_a}$

7. $W_a = C_a V_{aw} \rho_a$

8. $C_{acf} = 15.43 K_i \left(\frac{m_n P_s}{V_{w(std)} + V_{m(std)}\ T_s}\right)$

9. $C_S = (15.43\ \text{grains/gram})\,(m_n / V_{m(std)})$

10. $v_s = K_p C_p \sqrt{\frac{\Delta P\ T_s}{P_s M_s}}$

11. $Q_{acfm} = v_s A(60_{sec/min})$

12. $Q_{sd} = (3600_{sec/hr})(1 - B_{ws})\, v_s \left(\frac{T_{std} P_s}{T_s P_{std}}\right) A$

13. $E\,(\text{emission rate, lbs/hr}) = Q_{std}(C_s / 7000\ \text{grains/lb})$

14. $IKV = \frac{T_s V_{m(std)} P_{std}}{T_{std} v_s \theta A_n P_s 60(1 - B_{ws})} = K_4 \frac{T_s V_{m(std)}}{P_s v_s A_n \theta (1 - B_{ws})}$

15. $\%EA = \left(\frac{\%O_2 - (0.5\,\%CO)}{0.264\,\%N_2 - (\%O_2 - 0.5\,\%CO)}\right) \times 100$

© Mostardi Platt

MOSTARDI PLATT

ppm Conversion Calculations and Factors

ppm to lbs/scf

(ppm X) x (conversion factor X) = X lbs/scf

lbs/scf to lbs/hr

Dry ppm's with dry flow, and wet ppm's with wet flow.

(X lbs/scf) x (airflow scf/min) x (60 min/hr) = X lbs/hr

lbs/scf to lbs/mmBtu

Dry ppm's with dry diluent, and wet ppm's with wet diluent.

CO_2 – (X lbs/scf) x (F_c) x (100/CO_2) = X lbs/mmBtu

O_2 – (X lbs/scf) x (F_d) x (20.9/(20.9-O_2)) = X lbs/mmBtu

Conversion Factors

NO_x – 1.19396×10^{-7}

SO_2 – 1.6625×10^{-7}

CO – 7.2664×10^{-8}

CH_4 – 4.1637×10^{-8}

C_3H_8 – 1.1419×10^{-7}

© Mostardi Platt

Appendix E - Laboratory Sample Analysis

© Mostardi Platt

Client:	**Northern Metals, LLC**			
Facility:	**Pacific Street Yard**			
Test Location:	**Common Stack STRU1**			
Test Method:	**0061**			
Source Condtion:		**Normal**	**Normal**	**Normal**
		Run 1	**Run 2**	**Run 3**
Identify Analyte:	Other	**Hexavalent Chromium**	**Hexavalent Chromium**	**Hexavalent Chromium**
Molecular Weight:	51.996	ADL	ADL	ADL
ug (net) collected:		1.55	1.25	0.95

© Mostardi Platt

Maxxam
A Bureau Veritas Group Company

Your Project #: M173006-02
Site#: SHREDDER STACK
Site Location: NORTHEN MEATLS

Attention:Data Reporting

Mostardi Platt
888 Industrial Rd
Elmhurst, IL
USA 60126-1121

Your C.O.C. #: 018-020, 012-013, 014-015, 016-017

Report Date: 2017/08/24
Report #: R4673467
Version: 1 - Final

CERTIFICATE OF ANALYSIS

MAXXAM JOB #: B7H3811
Received: 2017/08/11, 15:30

Sample Matrix: Stack Sampling Train
Samples Received: 4

Analyses	Quantity	Date Extracted	Date Analyzed	Laboratory Method	Reference
Hexavalent Chromium (M0061)	4	2017/08/15	2017/08/14	BRL SOP-00106	EPA 7199/M0061 m
Chromium in Impinger by ICP	4	2017/08/17	2017/08/23	CAM SOP-00408 / BRL SOP-00102	EPA M0061 m
Chromium in Train Rinse by ICP	4	2017/08/17	2017/08/23	CAM SOP-00408 / BRL SOP-00102	EPA M0061 m
Final Volume of KOH Impinger	4	N/A	2017/08/18		
Final Volume of Train Rinse	4	N/A	2017/08/17		

Remarks:

Maxxam Analytics' laboratories are accredited to ISO/IEC 17025:2005 for specific parameters on scopes of accreditation. Unless otherwise noted, procedures used by Maxxam are based upon recognized Provincial, Federal or US method compendia such as CCME, MDDELCC, EPA, APHA.

All work recorded herein has been done in accordance with procedures and practices ordinarily exercised by professionals in Maxxam's profession using accepted testing methodologies, quality assurance and quality control procedures (except where otherwise agreed by the client and Maxxam in writing). All data is in statistical control and has met quality control and method performance criteria unless otherwise noted. All method blanks are reported: unless indicated otherwise, associated sample data are not blank corrected.

Maxxam Analytics' liability is limited to the actual cost of the requested analyses, unless otherwise agreed in writing. There is no other warranty expressed or implied. Maxxam has been retained to provide analysis of samples provided by the Client using the testing methodology referenced in this report. Interpretation and use of test results are the sole responsibility of the Client and are not within the scope of services provided by Maxxam, unless otherwise agreed in writing.

Solid sample results, except biota, are based on dry weight unless otherwise indicated. Organic analyses are not recovery corrected except for isotope dilution methods.
Results relate to samples tested.
This Certificate shall not be reproduced except in full, without the written approval of the laboratory.
Reference Method suffix "m" indicates test methods incorporate validated modifications from specific reference methods to improve performance.
* RPDs calculated using raw data. The rounding of final results may result in the apparent difference.

Maxxam Analytics International Corporation o/a Maxxam Analytics 6740 Campobello Road, Mississauga, Ontario, L5N 2L8 Tel: (905) 817-5700 Toll-Free: 800-563-6266 Fax: (905) 817-5777 www.maxxam.ca

© Mostardi Platt

Maxxam
A Bureau Veritas Group Company

Your Project #: M173006-02
Site#: SHREDDER STACK
Site Location: NORTHEN MEATLS

Attention:Data Reporting

Mostardi Platt
888 Industrial Rd
Elmhurst, IL
USA 60126-1121

Your C.O.C. #: 018-020, 012-013, 014-015, 016-017

Report Date: 2017/08/24
Report #: R4673467
Version: 1 - Final

CERTIFICATE OF ANALYSIS

MAXXAM JOB #: B7H3811
Received: 2017/08/11, 15:30

Encryption Key

Clayton Johnson
Project Manager - Air Toxics, Source Evaluation
24 Aug 2017 17:40:41

Please direct all questions regarding this Certificate of Analysis to your Project Manager.
Clayton Johnson, Project Manager - Air Toxics, Source Evaluation
Email: CJohnson@maxxam.ca
Phone# (905)817-5769

cosign

==========

Maxxam has procedures in place to guard against improper use of the electronic signature and have the required "signatories", as per section 5.10.2 of ISO/IEC 17025:2005(E), signing the reports. For Service Group specific validation please refer to the Validation Signature Page.

Maxxam Analytics International Corporation o/a Maxxam Analytics 6740 Campobello Road, Mississauga, Ontario, L5N 2L8 Tel: (905) 817-5700 Toll-Free: 800-563-6266 Fax: (905) 817-5777 www.maxxam.ca

© Mostardi Platt

Maxxam
A Bureau Veritas Group Company

Maxxam Job #: B7H3811
Report Date: 2017/08/24

Mostardi Platt
Client Project #: M173006-02
Site Location: NORTHEN MEATLS

RESULTS OF ANALYSES OF STACK SAMPLING TRAIN

Maxxam ID		EXX579			EXX580	EXX580	EXX581			
Sampling Date		2017/08/01			2017/08/01	2017/08/01	2017/08/01			
COC Number		018-020			012-013	012-013	014-015			
	UNITS	M0061- REAGENT BLANK	RDL	MDL	M0061- TEST 1	M0061- TEST 1 Lab-Dup	M0061- TEST 2	RDL	MDL	QC Batch
Potassium Hydroxide Volume	ml	185	1	1	455	N/A	455	1	1	5120199
Rinse Volume	ml	110	1	1	74	N/A	91	1	1	5123556
Hexavalent Chromium (Cr 6+)	ug	0.55	0.09	0.01	2.1	2.1	1.8	0.2	0.03	5113511

RDL = Reportable Detection Limit
QC Batch = Quality Control Batch
Lab-Dup = Laboratory Initiated Duplicate
N/A = Not Applicable

Maxxam ID		EXX582			
Sampling Date		2017/08/01			
COC Number		016-017			
	UNITS	M0061- TEST 3	RDL	MDL	QC Batch
Potassium Hydroxide Volume	ml	403	1	1	5120199
Rinse Volume	ml	99	1	1	5123556
Hexavalent Chromium (Cr 6+)	ug	1.5	0.2	0.03	5113511

RDL = Reportable Detection Limit
QC Batch = Quality Control Batch

Maxxam Analytics International Corporation o/a Maxxam Analytics 6740 Campobello Road, Mississauga, Ontario, L5N 2L8 Tel: (905) 817-5700 Toll-Free: 800-563-6266 Fax: (905) 817-5777 www.maxxam.ca

© Mostardi Platt

Maxxam
A Bureau Veritas Group Company

Maxxam Job #: B7H3811
Report Date: 2017/08/24

Mostardi Platt
Client Project #: M173006-02
Site Location: NORTHEN MEATLS

ELEMENTS BY ICP-AES (STACK SAMPLING TRAIN)

Maxxam ID		EXX579			EXX580			EXX581			
Sampling Date		2017/08/01			2017/08/01			2017/08/01			
COC Number		018-020			012-013			014-015			
	UNITS	M0061- REAGENT BLANK	RDL	MDL	M0061- TEST 1	RDL	MDL	M0061- TEST 2	RDL	MDL	QC Batch
Back Half Chromium (Cr)	ug	<2	2	0.6	<5	5	2	<5	5	2	5123562
Rinse Chromium (Cr)	ug	<10	10	3	<0.7	0.7	0.2	1.1	0.9	0.3	5123554

RDL = Reportable Detection Limit
QC Batch = Quality Control Batch

Maxxam ID		EXX582	EXX582			
Sampling Date		2017/08/01	2017/08/01			
COC Number		016-017	016-017			
	UNITS	M0061- TEST 3	M0061- TEST 3 Lab-Dup	RDL	MDL	QC Batch
Back Half Chromium (Cr)	ug	<4	<4	4	1	5123562
Rinse Chromium (Cr)	ug	<1	N/A	1	0.3	5123554

RDL = Reportable Detection Limit
QC Batch = Quality Control Batch
Lab-Dup = Laboratory Initiated Duplicate
N/A = Not Applicable

Maxxam Analytics International Corporation o/a Maxxam Analytics 6740 Campobello Road, Mississauga, Ontario, L5N 2L8 Tel: (905) 817-5700 Toll-Free: 800-563-6266 Fax: (905) 817-5777 www.maxxam.ca

© Mostardi Platt

Maxxam
A Bureau Veritas Group Company

Maxxam Job #: B7H3811
Report Date: 2017/08/24

Mostardi Platt
Client Project #: M173006-02
Site Location: NORTHEN MEATLS

TEST SUMMARY

Maxxam ID: EXX579
Sample ID: M0061- REAGENT BLANK
Matrix: Stack Sampling Train

Collected: 2017/08/01
Shipped:
Received: 2017/08/11

Test Description	Instrumentation	Batch	Extracted	Date Analyzed	Analyst
Hexavalent Chromium (M0061)	IC/SPEC	5113511	2017/08/15	2017/08/14	Lang Le
Chromium in Impinger by ICP	ICP	5123562	2017/08/17	2017/08/23	Azita Fazaeli
Chromium in Train Rinse by ICP	ICP	5123554	2017/08/17	2017/08/23	Azita Fazaeli
Final Volume of KOH Impinger		5120199	N/A	2017/08/18	Walt Wang
Final Volume of Train Rinse		5123556	N/A	2017/08/17	Farag Farag

Maxxam ID: EXX580
Sample ID: M0061- TEST 1
Matrix: Stack Sampling Train

Collected: 2017/08/01
Shipped:
Received: 2017/08/11

Test Description	Instrumentation	Batch	Extracted	Date Analyzed	Analyst
Hexavalent Chromium (M0061)	IC/SPEC	5113511	2017/08/15	2017/08/14	Lang Le
Chromium in Impinger by ICP	ICP	5123562	2017/08/17	2017/08/23	Azita Fazaeli
Chromium in Train Rinse by ICP	ICP	5123554	2017/08/17	2017/08/23	Azita Fazaeli
Final Volume of KOH Impinger		5120199	N/A	2017/08/18	Walt Wang
Final Volume of Train Rinse		5123556	N/A	2017/08/17	Farag Farag

Maxxam ID: EXX580 Dup
Sample ID: M0061- TEST 1
Matrix: Stack Sampling Train

Collected: 2017/08/01
Shipped:
Received: 2017/08/11

Test Description	Instrumentation	Batch	Extracted	Date Analyzed	Analyst
Hexavalent Chromium (M0061)	IC/SPEC	5113511	2017/08/15	2017/08/14	Lang Le

Maxxam ID: EXX581
Sample ID: M0061- TEST 2
Matrix: Stack Sampling Train

Collected: 2017/08/01
Shipped:
Received: 2017/08/11

Test Description	Instrumentation	Batch	Extracted	Date Analyzed	Analyst
Hexavalent Chromium (M0061)	IC/SPEC	5113511	2017/08/15	2017/08/14	Lang Le
Chromium in Impinger by ICP	ICP	5123562	2017/08/17	2017/08/23	Azita Fazaeli
Chromium in Train Rinse by ICP	ICP	5123554	2017/08/17	2017/08/23	Azita Fazaeli
Final Volume of KOH Impinger		5120199	N/A	2017/08/18	Walt Wang
Final Volume of Train Rinse		5123556	N/A	2017/08/17	Farag Farag

Maxxam ID: EXX582
Sample ID: M0061- TEST 3
Matrix: Stack Sampling Train

Collected: 2017/08/01
Shipped:
Received: 2017/08/11

Test Description	Instrumentation	Batch	Extracted	Date Analyzed	Analyst
Hexavalent Chromium (M0061)	IC/SPEC	5113511	2017/08/15	2017/08/14	Lang Le
Chromium in Impinger by ICP	ICP	5123562	2017/08/17	2017/08/23	Azita Fazaeli
Chromium in Train Rinse by ICP	ICP	5123554	2017/08/17	2017/08/23	Azita Fazaeli
Final Volume of KOH Impinger		5120199	N/A	2017/08/18	Walt Wang
Final Volume of Train Rinse		5123556	N/A	2017/08/17	Farag Farag

Maxxam Analytics International Corporation o/a Maxxam Analytics 6740 Campobello Road, Mississauga, Ontario, L5N 2L8 Tel: (905) 817-5700 Toll-Free: 800-563-6266 Fax: (905) 817-5777 www.maxxam.ca

© Mostardi Platt

Maxxam
A Bureau Veritas Group Company

Maxxam Job #: B7H3811
Report Date: 2017/08/24

Mostardi Platt
Client Project #: M173006-02
Site Location: NORTHEN MEATLS

TEST SUMMARY

Maxxam ID: EXX582 Dup
Sample ID: M0061- TEST 3
Matrix: Stack Sampling Train

Collected: 2017/08/01
Shipped:
Received: 2017/08/11

Test Description	Instrumentation	Batch	Extracted	Date Analyzed	Analyst
Chromium in Impinger by ICP	ICP	5123562	2017/08/17	2017/08/23	Azita Fazaeli

Maxxam Analytics International Corporation o/a Maxxam Analytics 6740 Campobello Road, Mississauga, Ontario, L5N 2L8 Tel: (905) 817-5700 Toll-Free: 800-563-6266 Fax: (905) 817-5777 www.maxxam.ca

© Mostardi Platt

GENERAL COMMENTS

Results relate only to the items tested.

Maxxam Analytics International Corporation o/a Maxxam Analytics 6740 Campobello Road, Mississauga, Ontario, L5N 2L8 Tel: (905) 817-5700 Toll-Free: 800-563-6266 Fax: (905) 817-5777 www.maxxam.ca

© Mostardi Platt

Maxxam
A Bureau Veritas Group Company

Maxxam Job #: B7H3811
Report Date: 2017/08/24

Mostardi Platt
Client Project #: M173006-02
Site Location: NORTHEN MEATLS

QUALITY ASSURANCE REPORT

QA/QC Batch	Init	QC Type	Parameter	Date Analyzed	Value	% Recovery	UNITS	QC Limits
5113511	LLE	Matrix Spike(EXX580)	Hexavalent Chromium (Cr 6+)	2017/08/14		101	%	80 - 120
5113511	LLE	Spiked Blank	Hexavalent Chromium (Cr 6+)	2017/08/14		101	%	90 - 110
5113511	LLE	Method Blank	Hexavalent Chromium (Cr 6+)	2017/08/14	<0.2		ug	
5113511	LLE	RPD - Sample/Sample Dup	Hexavalent Chromium (Cr 6+)	2017/08/14	0.15		%	20
5123554	AFZ	Matrix Spike	Rinse Chromium (Cr)	2017/08/23		102	%	75 - 125
5123554	AFZ	Matrix Spike DUP	Rinse Chromium (Cr)	2017/08/23		102	%	75 - 125
5123554	AFZ	MS/MSD RPD	Rinse Chromium (Cr)	2017/08/23	0.39		%	20
5123554	AFZ	Spiked Blank	Rinse Chromium (Cr)	2017/08/23		101	%	90 - 110
5123554	AFZ	Spiked Blank DUP	Rinse Chromium (Cr)	2017/08/23		101	%	90 - 110
5123554	AFZ	RPD	Rinse Chromium (Cr)	2017/08/23	0.69		%	20
5123554	AFZ	Method Blank	Rinse Chromium (Cr)	2017/08/23	<1		ug	
5123554	AFZ	RPD - Sample/Sample Dup	Rinse Chromium (Cr)	2017/08/23	1.4		%	20
5123562	AFZ	Matrix Spike(EXX582)	Back Half Chromium (Cr)	2017/08/23		92	%	75 - 125
5123562	AFZ	Matrix Spike DUP(EXX582)	Back Half Chromium (Cr)	2017/08/23		90	%	75 - 125
5123562	AFZ	MS/MSD RPD	Back Half Chromium (Cr)	2017/08/23	1.9		%	20
5123562	AFZ	Spiked Blank	Back Half Chromium (Cr)	2017/08/23		108	%	90 - 110
5123562	AFZ	Spiked Blank DUP	Back Half Chromium (Cr)	2017/08/23		100	%	90 - 110
5123562	AFZ	RPD	Back Half Chromium (Cr)	2017/08/23	8.0		%	20
5123562	AFZ	Method Blank	Back Half Chromium (Cr)	2017/08/23	<1		ug	
5123562	AFZ	RPD - Sample/Sample Dup	Back Half Chromium (Cr)	2017/08/23	NC		%	20

Duplicate: Paired analysis of a separate portion of the same sample. Used to evaluate the variance in the measurement.

Matrix Spike: A sample to which a known amount of the analyte of interest has been added. Used to evaluate sample matrix interference.

Spiked Blank: A blank matrix sample to which a known amount of the analyte, usually from a second source, has been added. Used to evaluate method accuracy.

Method Blank: A blank matrix containing all reagents used in the analytical procedure. Used to identify laboratory contamination.

NC (Duplicate RPD): The duplicate RPD was not calculated. The concentration in the sample and/or duplicate was too low to permit a reliable RPD calculation (absolute difference <= 2x RDL).

Maxxam Analytics International Corporation o/a Maxxam Analytics 6740 Campobello Road, Mississauga, Ontario, L5N 2L8 Tel: (905) 817-5700 Toll-Free: 800-563-6266 Fax: (905) 817-5777 www.maxxam.ca

© Mostardi Platt

Maxxam
A Bureau Veritas Group Company

Maxxam Job #: B7H3811
Report Date: 2017/08/24

Mostardi Platt
Client Project #: M173006-02
Site Location: NORTHEN MEATLS

VALIDATION SIGNATURE PAGE

The analytical data and all QC contained in this report were reviewed and validated by the following individual(s).

Frank Mo, B.Sc., Inorganic Lab. Manager

Walt Wang, Scientist

Maxxam has procedures in place to guard against improper use of the electronic signature and have the required "signatories", as per section 5.10.2 of ISO/IEC 17025:2005(E), signing the reports. For Service Group specific validation please refer to the Validation Signature Page.

Maxxam Analytics International Corporation o/a Maxxam Analytics 6740 Campobello Road, Mississauga, Ontario, L5N 2L8 Tel: (905) 817-5700 Toll-Free: 800-563-6266 Fax: (905) 817-5777 www.maxxam.ca

© Mostardi Platt

mostardi platt

Chain-of-Custody Form

Project Number: M173006	Date Results Required:
Client: Northern Metals	TAT Required:
Plant/Test Location: Sheldon Stack	Project Supervisor: [illegible]
PO#:	

Sample Number	Sample Date	Sample Point Identification	# of Cans	Sub Lab	Analysis Required	Volume ml
009	7/26/17	Lab Test 1 - Filter and Acetone Rinse	1	MAS	Asbestos-Bulk Bulk	
010	7/26/17	Lab Test 2 - Filter and Acetone Rinse	2	MAS	Asbestos-Bulk Bulk	
011	7/26/17	Lab Test 3 - Filter and Acetone Rinse	2	MAS	Asbestos-Bulk Bulk	
012	8/1/17	Test 1 - Nitric Rinse	1	MAS	0061 Hex Chrome	72
013	8/1/17	Test 1 - HCl Impingers and Rinse	1	MAS	0061 Hex Chrome	456
014	8/1/17	Test 2 - Nitric Rinse	1	MAS	0061 Hex Chrome	50
015	8/1/17	Test 2 - HCl Impingers and Rinse	1	MAS	0061 Hex Chrome	456
016	8/1/17	Test 3 - Nitric Rinse	1	MAS	0061 Hex Chrome	50
017	8/1/17	Test 3 - HCl Impingers and Rinse	1	MAS	0061 Hex Chrome	456
018	8/1/17	1N HCl Reagent Blank	1	MAS	0061 Hex Chrome	456
019	8/1/17	0.1N Nitric Reagent Blank	1	MAS	0061 Hex Chrome	101
020	8/1/17	DI Reagent Blank	1	MAS	0061 Hex Chrome	50

Delivered to Lab by: Date/Time:	Received by: Date/Time: [illegible]	Processed by: Date/Time:

Laboratory Notes: Times (if selected) acceptance tests only will be performed at the consolidated stack location using a Tedlar Bag in accordance with United States Environmental Protection Agency (USEPA) Method 5, Title 40, Code of Federal Regulations, Part 60 (40 CFR Part), Appendix A, and analyzed by transmission electron microscopy (TEM) according to a modified Variable Level II method.

17-005 Stack Chain of Custody | Revision 1.0 | 7/26/2018 Page 1

© Mostardi Platt

Maxxam
A Bureau Veritas Group Company

August 28, 2017

Clayton Johnson
MAXXAM ANALYTICS
6740 Campobello Road
Mississauga, ON L5N 2L8

Maxxam Analytics Work Ord A1708217

Reference JOB# B7H4024

Dear Clayton Johnson:

Maxxam Analytics received 3 samples on August 21, 2017 for the analyses presented in the following report.

The results apply only to the samples analyzed in this project. Please note that any unused portion of the samples will be discarded after a sixty-day holding period, unless you have requested otherwise.

This material is confidential and is intended solely for the person to whom it is addressed. If this is received in error, please contact the number provided below.

We appreciate the opportunity to assist you. If you have any questions concerning the report, please contact the analyst whose name appears on the report or myself at (770) 499-7701.

Sincerely,

Kuntal Parikh

Kuntal Parikh
Senior Microscopist
Electronic signature authorized through password protection

Maxxam Analytics
3380 Chastain Meadows Parkway, Suite 300
Kennesaw, GA 30144

Main: (770) 499.7701
Fax: (770) 499.7511
maxxamlabs.com

© Mostardi Platt

CASE NARRATIVE

Date: *28-Aug-17*

CLIENT: MAXXAM ANALYTICS

Project: JOB# B7H4024

Work Order No A1708217

Note: The each sample received in two parts, the glass bottle containing a dry residue materials and on a teflon filter. Perform indirect prep by utilizing dry residue and the teflon filter. The samples are analyzed by yamate level II method.

METHOD FOR ANALYSIS OF AIRBORNE ASBESTOS FIBERS USING TRANSMISSION ELECTRON MICROSCOPY (TEM) BY THE YAMATE EPA LEVEL II METHOD

Upon receipt in the laboratory, filters are transferred to a glass slide with a drop of dimethyl formamide/acetic acid clearing solution. After clearing, samples are partially ashed in a plasma asher. The filters are then carbon coated in a vacuum evaporator. Portions of the cleared/ashed/coated filters are excised and placed on 200-mesh copper TEM grids in a wick-type solutional washer containing 100% dimethyl formamide.

Two grids are placed consecutively in the TEM for examination. Five openings are examined on each grid at 15,000X magnification. Asbestos structures containing fibers which meet a >3:1 length:width aspect ratio are identified using morphology, selected area electron diffraction, and energy-dispersive x-ray spectroscopy. Fibers are classified by structure type, are sized (length and width), and are identified as chrysotile, amphibole, ambiguous, or non-asbestos.

Results are reported as total asbestos structures per square millimeter of filter and asbestos structures per cubic centimeter of air (asbestos structures/cc).

The Kennesaw, Georgia lab is accredited by NVLAP –Lab Code 101125-0.

References

Yamate, G. July 1984. EPA Contract # 68-02-3266.

© Mostardi Platt

MaxXam
A Bureau Veritas Group Company

ANALYTICAL RESULTS

Client: **MAXXAM ANALYTICS**

Client Reference No.: **JOB# B7H4024**

Work Order No.: **A1708217** **Date:** *28-Aug-17*

Analytical Method: TEM YAMATE LEVEL II Date Received: 8/21/2017 12:55:

Grid Opening Size: 0.011 mm² Report Date: 8/28/2017 4:24:2

Clayton ID	A1708217-001A	A1708217-002A	A1708217-003A
Client ID	EXY636-ASBESTOS/M5	EXY637-ASBESTOS/M5	EXY638-ASBESTOS/M5
Air Vol (L)	0	0	0
No Openings Analyzed	10	10	10
LOD (Str/mm²)	9.0	9.0	9.0
Asbestos Structures			
Chrysotile	0	0	0
Amosite	0	0	0
Crocidolite	0	0	0
Actinolite-Tremolite	0	0	0
Anthophyllite	0	0	0
Total Asbestos			
Count	0	0	0
Str/mm²	< 9.0	< 9.0	< 9.0
Str/cc	--	--	--
Non-Regulated Amphiboles			
Count	0	0	0
Str/mm²	< 9.0	< 9.0	< 9.0
Str/cc	--	--	--
All Other Types			
Count	0	0	0
Str/mm²	< 9.0	< 9.0	< 9.0
Str/cc	--	--	--
Total Structures, All Types			
Count	0	0	0
Str/mm²	< 9.0	< 9.0	< 9.0
Str/cc	--	--	--
Total Particulates			
Count	0	0	0
Particulates/mm²	< 9.0	< 9.0	< 9.0
Particulates/cc	--	--	--

MCEF: Mixed Cellulose Ester Filter

f/mm²: Fibers per square millimeter

"--" : No Results (Area Sampled is 0)

f/cc: Fibers per cubic centimeter of air collected.

<: Result is less than the indicated limit of detection.

Note 1: Fibers counted met a ≥ 3:1 (length:width) aspect ratio and wer ≥ 5.0um in length an ≥ 0.25um in width

Analyst(s) Name/Date: Khuntal Panilch 8/28/2017

© Mostardi Platt

ANALYTICAL RESULTS

Client: **MAXXAM ANALYTICS**

Client Reference No.: **JOB# B7H4024**

Work Order No.: **A1708217** **Date:** *28-Aug-17*

Analytical Method:	TEM YAMATE LEVEL II	Filtration Filter:	MCE Filter, .45um
Sample Type:	Air	Effective Filter Area:	1320 mm²
Date Received:	8/21/2017 12:55:32 PM	Grid Opening Size:	0.0111 mm²
Report Date:	8/28/2017 4:24:20 PM		

Lab Sample No.	Client Sample Identification	Date Sampled	Prep Date	Air Vol. (L)	Dilution Factor	Analysis Date	Analyst	Grid Box Identification
A1708217-001A	SBESTOS/M5-U1-T1-FILTER/	07/26/17 @12:00 am	08/25/17 @3:20 pm	0	1	08/28/17 @3:08 pm	KRP	08-25-17F-1

Analysis	Grid Openings Counted	Reporting Limit (s/mm²)	Total Asbestos (s/mm²)	Structures Counted			Total Asbestos				95 % Confidence Limit	
				Chry-sotile	Amph-ibole	Total	Chrysotile (s/cc)	Amphibole (s/cc)	Total (s/cc)	Sensitivity (s/cc)	Low	High
Asbestos	10	9.0	< 9.0	0	0	0	--	--	--	--	--	--

This sample has been quantified from a re-deposit of the original sample filter submited. 25% of the parent sample was used.

TEM Count Details

Rec	Grid	Grid Opening ID	Count	Length (um)	Width (um)	Structure ID	Structure Type	EDS	Mass (ng)
1	A1	C4A	0	0.00	0.00	None Detected			0
2	A1	C4C	0	0.00	0.00	None Detected			0
3	A1	E4A	0	0.00	0.00	None Detected			0
4	A1	E4C	0	0.00	0.00	None Detected			0
5	A1	F4A	0	0.00	0.00	None Detected			0
6	A2	C4A	0	0.00	0.00	None Detected			0
7	A2	C4C	0	0.00	0.00	None Detected			0
8	A2	E4A	0	0.00	0.00	None Detected			0
9	A2	E4C	0	0.00	0.00	None Detected			0
10	A2	F4A	0	0.00	0.00	None Detected			0
	Total Structures:		0					**Total Mass:**	0

© Mostardi Platt

MaxXam
A Bureau Veritas Group Company

ANALYTICAL RESULTS

Client: **MAXXAM ANALYTICS**

Client Reference No.: **JOB# B7H4024**

Work Order No.: **A1708217** **Date:** *28-Aug-17*

Analytical Method: TEM YAMATE LEVEL II
Sample Type: Air
Date Received: 8/21/2017 12:55:32 PM
Report Date: 8/28/2017 4:24:20 PM

Filtration Filter: MCE Filter, .45um
Effective Filter Area: 1320 mm²
Grid Opening Size: 0.0111 mm²

Lab Sample No.	Client Sample Identification	Date Sampled	Prep Date	Air Vol. (L)	Dilution Factor	Analysis Date	Analyst	Grid Box Identification
A1708217-001A	SBESTOS/M5-U1-T1-FILTER/	07/26/17 @12:00 am	08/25/17 @3:20 pm	0	1	08/28/17 @3:08 pm	KRP	08-25-17F-1

TEM Microscope Documentation

Instrument	*Magnification	Accelerating Voltage	Calibration Date
TEM 1/D675	14500x	100 KeV	8/9/2017

*Magnification = Calibrated screen magnification at 15,000X. For ISO Method 10312 the calibrated screen magnification is at 20,000X

© Mostardi Platt

Maxxam
A Bureau Veritas Group Company

ANALYTICAL RESULTS

Client: **MAXXAM ANALYTICS**

Client Reference No.: **JOB# B7H4024**

Work Order No.: **A1708217** **Date:** *28-Aug-17*

Analytical Method:	TEM YAMATE LEVEL II	Filtration Filter:	MCE Filter, .45um
Sample Type:	Air	Effective Filter Area:	1320 mm²
Date Received:	8/21/2017 12:55:32 PM	Grid Opening Size:	0.0111 mm²
Report Date:	8/28/2017 4:24:20 PM		

Lab Sample No.	Client Sample Identification	Date Sampled	Prep Date	Air Vol. (L)	Dilution Factor	Analysis Date	Analyst	Grid Box Identification
A1708217-002A	SBESTOS/M5-U1-T2-FILTER/	07/26/17 @12:00 am	08/25/17 @3:20 pm	0	1	08/28/17 @3:08 pm	KRP	08-25-17F-1

Analysis	Grid Openings Counted	Reporting Limit (s/mm²)	Total Asbestos (s/mm²)	Structures Counted			Total Asbestos				95 % Confidence Limit	
				Chry-sotile	Amph-ibole	Total	Chrysotile (s/cc)	Amphibole (s/cc)	Total (s/cc)	Sensitivity (s/cc)	Low	High
Asbestos	10	9.0	< 9.0	0	0	0	--	--	--	--	--	--

This sample has been quantified from a re-deposit of the original sample filter submited. 25% of the parent sample was used.

TEM Count Details

Rec	Grid	Grid Opening ID	Count	Length (um)	Width (um)	Structure ID	Structure Type	EDS	Mass (ng)
1	B1	C4A	0	0.00	0.00	None Detected			0
2	B1	C4C	0	0.00	0.00	None Detected			0
3	B1	E4A	0	0.00	0.00	None Detected			0
4	B1	E4C	0	0.00	0.00	None Detected			0
5	B1	F4A	0	0.00	0.00	None Detected			0
6	B2	C4A	0	0.00	0.00	None Detected			0
7	B2	C4C	0	0.00	0.00	None Detected			0
8	B2	E4A	0	0.00	0.00	None Detected			0
9	B2	E4C	0	0.00	0.00	None Detected			0
10	B2	F4A	0	0.00	0.00	None Detected			0
	Total Structures:		0					**Total Mass:**	0

© Mostardi Platt

MaxXam
A Bureau Veritas Group Company

ANALYTICAL RESULTS

Client: **MAXXAM ANALYTICS**

Client Reference No.: **JOB# B7H4024**

Work Order No.: **A1708217** **Date:** *28-Aug-17*

Analytical Method: TEM YAMATE LEVEL II
Sample Type: Air
Date Received: 8/21/2017 12:55:32 PM
Report Date: 8/28/2017 4:24:20 PM

Filtration Filter: MCE Filter, .45um
Effective Filter Area: 1320 mm²
Grid Opening Size: 0.0111 mm²

Lab Sample No.	Client Sample Identification	Date Sampled	Prep Date	Air Vol. (L)	Dilution Factor	Analysis Date	Analyst	Grid Box Identification
A1708217-002A	SBESTOS/M5-U1-T2-FILTER/	07/26/17 @12:00 am	08/25/17 @3:20 pm	0	1	08/28/17 @3:08 pm	KRP	08-25-17F-1

TEM Microscope Documentation

Instrument	*Magnification	Accelerating Voltage	Calibration Date
TEM 1/D675	14500x	100 KeV	8/9/2017

*Magnification = Calibrated screen magnification at 15,000X. For ISO Method 10312 the calibrated screen magnification is at 20,000X

© Mostardi Platt

ANALYTICAL RESULTS

Client: **MAXXAM ANALYTICS**

Client Reference No.: **JOB# B7H4024**

Work Order No.: **A1708217** **Date:** *28-Aug-17*

Analytical Method:	TEM YAMATE LEVEL II	Filtration Filter:	MCE Filter, .45um
Sample Type:	Air	Effective Filter Area:	1320 mm²
Date Received:	8/21/2017 12:55:32 PM	Grid Opening Size:	0.0111 mm²
Report Date:	8/28/2017 4:24:20 PM		

Lab Sample No.	Client Sample Identification	Date Sampled	Prep Date	Air Vol. (L)	Dilution Factor	Analysis Date	Analyst	Grid Box Identification
A1708217-003A	SBESTOS/M5-U1-T3-FILTER/	07/26/17 @12:00 am	08/25/17 @3:20 pm	0	1	08/28/17 @3:08 pm	KRP	08-25-17F-1

Analysis	Grid Openings Counted	Reporting Limit (s/mm²)	Total Asbestos (s/mm²)	Structures Counted			Total Asbestos				95 % Confidence Limit	
				Chry-sotile	Amph-ibole	Total	Chrysotile (s/cc)	Amphibole (s/cc)	Total (s/cc)	Sensitivity (s/cc)	Low	High
Asbestos	10	9.0	< 9.0	0	0	0	--	--	--	--	--	--

This sample has been quantified from a re-deposit of the original sample filter submited. 25% of the parent sample was used.

TEM Count Details

Rec	Grid	Grid Opening ID	Count	Length (um)	Width (um)	Structure ID	Structure Type	EDS	Mass (ng)
1	C1	C4A	0	0.00	0.00	None Detected			0
2	C1	C4C	0	0.00	0.00	None Detected			0
3	C1	E4A	0	0.00	0.00	None Detected			0
4	C1	E4C	0	0.00	0.00	None Detected			0
5	C1	F4A	0	0.00	0.00	None Detected			0
6	C2	C4A	0	0.00	0.00	None Detected			0
7	C2	C4C	0	0.00	0.00	None Detected			0
8	C2	E4A	0	0.00	0.00	None Detected			0
9	C2	E4C	0	0.00	0.00	None Detected			0
10	C2	F4A	0	0.00	0.00	None Detected			0
	Total Structures:		0					**Total Mass:**	0

© Mostardi Platt

MaxXam
A Bureau Veritas Group Company

ANALYTICAL RESULTS

Client: **MAXXAM ANALYTICS**

Client Reference No.: **JOB# B7H4024**

Work Order No.: **A1708217** **Date:** *28-Aug-17*

Analytical Method: TEM YAMATE LEVEL II
Sample Type: Air
Date Received: 8/21/2017 12:55:32 PM
Report Date: 8/28/2017 4:24:20 PM

Filtration Filter: MCE Filter, .45um
Effective Filter Area: 1320 mm²
Grid Opening Size: 0.0111 mm²

Lab Sample No.	Client Sample Identification	Date Sampled	Prep Date	Air Vol. (L)	Dilution Factor	Analysis Date	Analyst	Grid Box Identification
A1708217-003A	SBESTOS/M5-U1-T3-FILTER/	07/26/17 @12:00 am	08/25/17 @3:20 pm	0	1	08/28/17 @3:08 pm	KRP	08-25-17F-1

TEM Microscope Documentation

Instrument	*Magnification	Accelerating Voltage	Calibration Date
TEM 1/D675	14500x	100 KeV	8/9/2017

*Magnification = Calibrated screen magnification at 15,000X. For ISO Method 10312 the calibrated screen magnification is at 20,000X

Analyst(s) Name/Date: Khushal Parikh 8/28/2017

© Mostardi Platt

Maxxam
A Bureau Veritas Group Company

Sent To: BV Facility
3380 Chastain Meadows Parkway Suite 300
Kennesaw, GA, 30144
Tel: (770) 499-7500

CHAIN OF CUSTODY RECORD FOR SUBCONTRACTED WORK

COC # B7H4024-MBVG-01-01

A170817

REPORT INFORMATION

Company:	Maxxam
Address:	6740 Campobello Road, Mississauga, Ontario, L5N 2L8
Contact Name:	Clayton Johnson
Email:	CJohnson@maxxam.ca
Phone:	(905) 817-5769
Maxxam Project #:	B7H4024

ANALYSIS REQUESTED

#	SAMPLE ID	MATRIX	DATE SAMPLED (YYYY/MM/DD)	TIME SAMPLED (HH:MM)	SAMPLER INITIALS	# CONT.	Subcontracting from AT-SE to BV Now	ADDITIONAL SAMPLE INFORMATION
1	EXY636-ASBESTOS/M5- U1- T1- FILTER	FLT	2017/07/26			1	X	(P: 01)
2	EXY637-ASBESTOS/M5- U1- T2- FILTER	FLT	2017/07/26			1	X	(P: 01)
3	EXY638-ASBESTOS/M5- U1- T3- FILTER	FLT	2017/07/26			1	X	(P: 01)
4	EXY644-ASBESTOS/M5- U1- T1- ACETONE	TR	2017/07/26			1	X	(P: 01)
5	EXY645-ASBESTOS/M5- U1- T2- ACETONE	TR	2017/07/26			1	X	(P: 01)
6	EXY646-ASBESTOS/M5- U1- T3- ACETONE	TR	2017/07/26			1	X	(P: 01)
7								(P: 01)
8								
9								
10								

REGULATORY CRITERIA

SPECIAL INSTRUCTIONS

Please inform Maxxam immediately if you are not accredited for the requested test(s).
Please return a copy of this form with the report.
Note: Three two-hour asbestos test runs will be performed at the combined stack location utilizing a teflon filter in accordance with USEPA method 5, Title 40, 40CFR60. Appendix A, and analyzed by TEM according to a modified Yamate Level II method

TURNAROUND TIME

☐ Rush Required

2017/08/25
Date Required

Please inform us if rush charges will be incurred.

COOLER ID:

	YES	NO	Temp: (°C)			
Custody Seal Present						
Custody Seal Intact						
Cooling Media Present						

COOLER ID:

	YES	NO	Temp: (°C)			
Custody Seal Present						
Custody Seal Intact						
Cooling Media Present						

COOLER ID:

	YES	NO	Temp: (°C)			
Custody Seal Present						
Custody Seal Intact						
Cooling Media Present						

RELINQUISHED BY: (SIGN & PRINT)	DATE: (YYYY/MM/DD)	TIME: (HH:MM)	RECEIVED BY: (SIGN & PRINT)	DATE: (YYYY/MM/DD)	TIME: (HH:MM)
1. SHRUTI PATEL	2017/08/18	14:20	1. LETICIA GAS	8-10-17	11:00 am
2.			2.		

Client: Northern Metals, LLC
Facility: Pacific Street Yard
Project Number: M173006
Test Location: Common Stack STRU1

Test Method: Asbestos sampled by USEPA Method 5 and Analyzed by TEM Modified Yamate Level II Method
Filterable Analysis Date: Maxxam Analytics 8/28/17

Description	Sample Date	Initial Weight (grams)	Final Weight (grams)	Net Weight Gain (grams)
Total Asbestos-Counts				
Test No. 1 Source Condition: Normal	7/26/2017			
M5 Filter		0.0000	0.0000	0.0000
Total Asbestos-Counts				
Test No. 2 Source Condition: Normal	7/26/2017			
M5 Filter		0.0000	0.0000	0.0000
Total Asbestos-Counts				
Test No. 3 Source Condition: Normal	7/27/2017			
M5 Filter		0.0000	0.0000	0.0000

© Mostardi Platt

METHOD 30B CALIBRATION SUMMARY

Project #:	**M173006**	**Location:**	**Common Stack STRU1**
Client:	**Northern Metals, LLC**	**Condition:**	**Normal Load**
Facility:	**Pacific Street Yard Facility**	**Data Taken By:**	**JFR**
Analyzer ID:	**1496**	**Diluent:**	**O2 %**

Calibration ID:	**CAL-01**		
Standard Mass (ng)	**Ohio Lumex Response (Area)**	**Calculated Mass (ng)**	**Percent Error (%)**
50	9190	48.55	2.90%
25	4620	24.41	2.36%
100	17600	92.98	7.02%
500	94100	497.13	0.57%
250	48900	258.34	3.34%
10	1880	9.93	0.70%
Slope:	**0.005283**	**0.00530**	
R-Squared:	**0.999303**		
Enter Lowest Calibration Point			
Standard Mass (ng)	**Ohio Lumex Response (Area)**	**Calculated Mass (ng)**	**Percent Error (%)**
10	1880	9.96	0.40%
Independent Calibration Verification			
Standard Mass (ng)	**Ohio Lumex Response (Area)**	**Calculated Mass (ng)**	**Percent Error (%)**
50	9230	48.76	2.48%
Continuing Calibration Verification			
Standard Mass (ng)	**Ohio Lumex Response (Area)**	**Calculated Mass (ng)**	**Percent Error (%)**
50	8900	47.02	5.96%
50	8910	47.07	5.86%
50	8940	47.23	5.54%
50	9310	49.18	1.64%

© Mostardi Platt

METHOD 30B TEST RESULTS

Project #: M173006
Client: Northern Metals, LLC
Facility: Pacific Street Yard Facility
Analyzer ID: 1496

Location: Common Stack STRU1
Condition: Normal Load
Data Taken By: JFR

Cal Curve	Run ID	Trap ID	Section	Ohio Lumex Response (Area)	Hg Mass (ng)
CAL-01	1A	OLC043150	1-Sample	4920	26.0
			2-Breakthrough	436	2.3
CAL-01	1B	OL308930	1-Sample	14900	78.7
			2-Breakthrough	408	2.2
CAL-01	2A	OLC041747	1-Sample	11100	58.6
			2-Breakthrough	424	2.2
CAL-01	2B	OL369616	1-Sample	20500	108.3
			2-Breakthrough	-160	-0.8
CAL-01	3A	OLC050912	1-Sample	255000	1347.2
			2-Breakthrough	270	1.4
CAL-01	3B	OL333669	1-Sample	208000	1098.9
			2-Breakthrough	213	1.1
CAL-01	4A	OLC050919	1-Sample	4770	25.2
			2-Breakthrough	266	1.4
CAL-01	4B	OL387883	1-Sample	14300	75.5
			2-Breakthrough	132	0.7

Ohio Lumex Calibration and Results Summary
Northern Metals, LLC
Pacific Street Yard Facility
Common Stack STRU1
8/1/2017

Description	Area	Maximum	Time
Std__50	9190	1090	7:05:29 AM
Std__25	4620	468	7:08:11 AM
Std__250	48900	4530	7:25:28 AM
Std__500	94100	6300	7:27:55 AM
Std__100	17600	1120	7:41:51 AM
Std__10	1880	95	9:41:02 AM
Std__50 ICV HP	9230	694	9:46:48 AM
Test 1 Trap A 043150 Sec 1	4920	231	11:13:30 AM
Test 1 Trap A 043150 Sec 2	436	56	11:18:14 AM
Test 1 Trap B 308930 Sec 1 50 ng spike	14900	459	11:23:08 AM
Test 1 Trap B 308930 Sec 2 50 ng spike	408	25	11:26:34 AM
Std__50	8900	926	11:39:34 AM
Test 2 Trap A 041747 Sec1	11100	584	12:36:34 PM
Test 2 Trap A 041747 Sec2	424	33	12:40:55 PM
Test 2 Trap B 369616 Sec1 50 ng spike	20500	652	12:46:39 PM
Test 2 Trap B 369616 Sec2 50 ng spike	-160	22	1:00:50 PM
Std__50	8910	492	1:15:30 PM
Test 3 Trap A 050912 Sec 1	255000	10100	2:13:20 PM
Test 3 Trap A 050912 Sec 2	270	33	2:19:39 PM
Test 3 Trap B 333669 Sec 1 50 ng spike	208000	9700	2:22:59 PM
Test 3 Trap B 333669 Sec 2 50 ng spike	213	17	2:25:08 PM
Std__50	8940	641	2:36:24 PM
Test 4 Trap A 050919 Sec 1	4770	108	4:28:15 PM
Test 4 Trap A 050919 Sec 2	266	38	4:32:30 PM
Test 4 Trap B 387833 Sec 1 50 ng spike	14300	218	4:36:25 PM
Test 4 Trap B 387833 Sec 2 50 ng spike	132	21	4:41:34 PM
Std__50	9310	1060	4:46:48 PM

© Mostardi Platt

ALS Life Sciences
1435 Norjohn Court, Unit 1, Burlington, ON, Canada L7L 0E6
Phone: 905-331-3111, FAX: 905-331-4567

Certificate of Analysis

ALS Project Contact:	Rachael Stolys	**Client Name:**	Mostardi Platt Environmental
ALS Project ID:	21276	**Client Address:**	888 Industrial Drive
ALS WO#:	L1972055		Elmhurst
Date of Report	25-Aug-17		Illinois, 60126
Date of Sample Receipt	9-Aug-17	**Client Contact:**	Jenna Ghanma
		Client Project ID:	M173006
			Trinity Consultants / Northern Metals

COMMENTS: **PCDD/F by EPA M23**

The media Method Blank (WG2590247-4) had selected Extraction Internal Standards with recoveries above the method acceptance criteria. Native results quantified by Isotope Dilution are inherently recovery corrected so no impact to overall data quality is expected.

Certified by:

Bradley Reimer
GC/MS Laboratory Senior Technical Specialist

Results in this certificate relate only to the samples as submitted to the laboratory.
This report shall not be reproduced, except in full, without the written permission of ALS Canada Ltd.

ALS Life sciences

Sample Analysis summary Report

Sample Name	TEST #1	TEST #2	TEST #4	BLANK
ALS Sample ID	L1972055-1	L1972055-2	L1972055-3	L1972055-4
Sample Size	1	1	1	1
Sample size units	Train	Train	Train	Train
Percent Moisture	n/a	n/a	n/a	n/a
Sample Matrix	Stack	Stack	Stack	Stack
Sampling Date	26-Jul-17	27-Jul-17	1-Aug-17	1-Aug-17
Extraction Date	15-Aug-17	15-Aug-17	15-Aug-17	15-Aug-17
Target Analytes	**pg**	**pg**	**pg**	**pg**
2,3,7,8-TCDD	<2.3	<6.0	<2.2	<5.3
1,2,3,7,8-PeCDD	<7.1	21.1	5.27	<4.5
1,2,3,4,7,8-HxCDD	<5.0	18.0	<3.8	<5.1
1,2,3,6,7,8-HxCDD	15.6	37.4	16.8	4.56
1,2,3,7,8,9-HxCDD	14.6	36.9	<14	<4.4
1,2,3,4,6,7,8-HpCDD	217	412	263	<3.7
OCDD	1080	1750	1290	<17
2,3,7,8-TCDF	9.64	<16	7.66	<3.8
1,2,3,7,8-PeCDF	6.78	7.87	6.02	<3.2
2,3,4,7,8-PeCDF	10.1	21.2	9.95	<3.0
1,2,3,4,7,8-HxCDF	<7.9	29.4	8.10	<2.9
1,2,3,6,7,8-HxCDF	6.38	19.3	6.73	<2.4
2,3,4,6,7,8-HxCDF	8.52	<13	7.23	<3.7
1,2,3,7,8,9-HxCDF	3.11	<7.5	<3.7	<3.4
1,2,3,4,6,7,8-HpCDF	<32	69.7	37.6	<4.2
1,2,3,4,7,8,9-HpCDF	<2.7	<11	3.73	<5.4
OCDF	35.0	62.4	43.5	<10
Field Spike Standards	**% Rec**	**% Rec**	**% Rec**	**% Rec**
37Cl4-2,3,7,8-TCDD	98	97	96	97
13C12-1,2,3,4,7,8-HxCDD	110	107	110	110
13C12-2,3,4,7,8-PeCDF	101	101	98	98
13C12-1,2,3,4,7,8-HxCDF	112	110	113	110
13C12-1,2,3,4,7,8,9-HpCDF	100	105	109	99
Extraction Standards				
13C12-2,3,7,8-TCDD	105	78	91	76
13C12-1,2,3,7,8-PeCDD	103	75	97	78
13C12-1,2,3,6,7,8-HxCDD	112	95	107	96
13C12-1,2,3,4,6,7,8-HpCDD	109	113	124	99
13C12-OCDD	97	114	118	101
13C12-2,3,7,8-TCDF	105	81	92	78
13C12-1,2,3,7,8-PeCDF	105	75	98	78
13C12-1,2,3,6,7,8-HxCDF	107	94	102	92
13C12-1,2,3,4,6,7,8-HpCDF	105	100	106	93
Cleanup Standard				
13C12-1,2,3,7,8,9-HxCDF	95	97	93	91
Homologue Group Totals	**pg**	**pg**	**pg**	**pg**
Total-TCDD	31.3	27.1	2.96	<5.3
Total-PeCDD	<1.5	56.2	38.3	<4.5
Total-HxCDD	142	110	57.4	<5.1
Total-HpCDD	411	759	471	<3.4
Total-TCDF	192	133	125	<3.8
Total-PeCDF	63.8	128	96.7	<3.2
Total-HxCDF	65.8	48.8	72.3	<3.3
Total-HpCDF	22.9	106	41.4	<5.4
Toxic Equivalency - (WHO 2005)				
Lower Bound PCDD/F TEQ (WHO 2005)	11.5	47.2	16.5	0.456
Mid Point PCDD/F TEQ (WHO 2005)	22.6	53.5	19.6	7.59
Upper Bound PCDD/F TEQ (WHO 2005)	22.6	56.9	20.9	14.0

© Mostardi Platt

ALS Life sciences

Quality Control Summary Report

Sample Name	Method Blank	Method Blank	Laboratory Control Sample
ALS Sample ID	WG2590247-1	WG2590247-4	WG2590247-2
Sample Size	1.00	1.00	1.00
Sample size units	Train	Train	n/a
Percent Moisture	n/a	n/a	n/a
Sample Matrix	QC	QC	QC
Sampling Date	n/a	n/a	n/a
Extraction Date	15-Aug-17	15-Aug-17	15-Aug-17
Target Analytes	**pg**	**pg**	**% Rec**
2,3,7,8-TCDD	<6.4	<2.2	95
1,2,3,7,8-PeCDD	<4.0	<1.8	107
1,2,3,4,7,8-HxCDD	<8.1	<2.4	117
1,2,3,6,7,8-HxCDD	<6.3	<1.9	109
1,2,3,7,8,9-HxCDD	<7.0	<2.1	119
1,2,3,4,6,7,8-HpCDD	<5.0	<2.0	96
OCDD	14.2	<7.8	98
2,3,7,8-TCDF	<3.9	<1.8	96
1,2,3,7,8-PeCDF	<3.0	<1.4	100
2,3,4,7,8-PeCDF	<2.9	<1.4	94
1,2,3,4,7,8-HxCDF	<4.0	<1.9	117
1,2,3,6,7,8-HxCDF	<3.3	<1.6	118
2,3,4,6,7,8-HxCDF	<3.7	<1.7	113
1,2,3,7,8,9-HxCDF	<4.6	<2.2	113
1,2,3,4,6,7,8-HpCDF	<2.5	2.03	97
1,2,3,4,7,8,9-HpCDF	<3.2	<1.1	94
OCDF	9.55	<4.0	96
Field Spike Standards	**% Rec**	**% Rec**	**% Rec**
37Cl4-2,3,7,8-TCDD	NS	NS	NS
13C12-1,2,3,4,7,8-HxCDD	NS	NS	NS
13C12-2,3,4,7,8-PeCDF	NS	NS	NS
13C12-1,2,3,4,7,8-HxCDF	NS	NS	NS
13C12-1,2,3,4,7,8,9-HpCDF	NS	NS	NS
Extraction Standards			
13C12-2,3,7,8-TCDD	70	93	58
13C12-1,2,3,7,8-PeCDD	75	90	63
13C12-1,2,3,6,7,8-HxCDD	85	103	64
13C12-1,2,3,4,6,7,8-HpCDD	114	132	76
13C12-OCDD	118	143	66
13C12-2,3,7,8-TCDF	73	93	58
13C12-1,2,3,7,8-PeCDF	73	91	60
13C12-1,2,3,6,7,8-HxCDF	87	107	63
13C12-1,2,3,4,6,7,8-HpCDF	106	119	70
Cleanup Standard			
13C12-1,2,3,7,8,9-HxCDF	101	94	76
Homologue Group Totals	**pg**	**pg**	
Total-TCDD	<6.4	<2.2	
Total-PeCDD	<4.0	<1.8	
Total-HxCDD	<8.1	<2.4	
Total-HpCDD	<2.5	<2.0	
Total-TCDF	<3.9	<1.8	
Total-PeCDF	<3.0	<1.4	
Total-HxCDF	<4.6	<2.2	
Total-HpCDF	<3.2	2.03	
Toxic Equivalency - (WHO 2005)			
Lower Bound PCDD/F TEQ (WHO 2005)	0.00713	0.0203	
Mid Point PCDD/F TEQ (WHO 2005)	7.81	3.05	
Upper Bound PCDD/F TEQ (WHO 2005)	15.6	6.08	

© Mostardi Platt

ALS Life sciences

Sample Analysis Report

Sample Name	**TEST #1**	Sampling Date	26-Jul-17
ALS Sample ID	L1972055-1	Extraction Date	15-Aug-17
Analysis Method	EPA M23	Sample Size	1 Train
Analysis Type	Sample	Percent Moisture	n/a
Sample Matrix	Stack	Split Ratio	2

Approved:
T.Patterson
--e-signature--
24-Aug-2017

Run Information	**Run 1**
Filename	7-170823A23
Run Date	24-Aug-17 02:55
Final Volume	25 uL
Dilution Factor	1
Analysis Units	pg
Instrument - Column	HRMS-7 DB5MSUSP303114H

Target Analytes	TEF (WHO 2005)	Ret. Time	Conc. pg	EDL pg	Flags	EMPC pg	LQL
2,3,7,8-TCDD	1	27.60	<2.3	2.0	M,J,R	2.3	25
1,2,3,7,8-PeCDD	1	31.89	<7.1	1.5	M,J,R	7.1	130
1,2,3,4,7,8-HxCDD	0.1	33.97	<5.0	1.9	M,J,R	5.0	130
1,2,3,6,7,8-HxCDD	0.1	34.02	15.6	1.5	M,J		130
1,2,3,7,8,9-HxCDD	0.1	34.14	14.6	1.6	J		130
1,2,3,4,6,7,8-HpCDD	0.01	35.63	217	4.3			130
OCDD	0.0003	37.11	1080	3.5			250
2,3,7,8-TCDF	0.1	26.69	9.64	1.9	J		25
1,2,3,7,8-PeCDF	0.03	30.93	6.78	1.3	M,J		130
2,3,4,7,8-PeCDF	0.3	31.67	10.1	1.2	J		130
1,2,3,4,7,8-HxCDF	0.1	33.47	<7.9	2.2	M,J,R	7.9	130
1,2,3,6,7,8-HxCDF	0.1	33.54	6.38	1.8	M,J		130
2,3,4,6,7,8-HxCDF	0.1	33.88	8.52	2.1	J		130
1,2,3,7,8,9-HxCDF	0.1	34.31	3.11	2.5	J		130
1,2,3,4,6,7,8-HpCDF	0.01	35.07	<32	1.1	M,J,R	32	130
1,2,3,4,7,8,9-HpCDF	0.01	35.89	<2.7	1.5	M,J,R	2.7	130
OCDF	0.0003	37.20	35.0	4.2	J,B		250

Field Spike Standards	pg		% Rec	Limits
37Cl4-2,3,7,8-TCDD	1000	27.62	98	70-130
13C12-1,2,3,4,7,8-HxCDD	4000	33.96	110	70-130
13C12-2,3,4,7,8-PeCDF	4000	31.66	101	70-130
13C12-1,2,3,4,7,8-HxCDF	4000	33.46	112	70-130
13C12-1,2,3,4,7,8,9-HpCDF	4000	35.87	100	70-130
Extraction Standards				
13C12-2,3,7,8-TCDD	4000	27.59	105	40-130
13C12-1,2,3,7,8-PeCDD	4000	31.87	103	40-130
13C12-1,2,3,6,7,8-HxCDD	4000	34.02	112	40-130
13C12-1,2,3,4,6,7,8-HpCDD	4000	35.62	109	25-130
13C12-OCDD	8000	37.10	97	25-130
13C12-2,3,7,8-TCDF	4000	26.68	105	40-130
13C12-1,2,3,7,8-PeCDF	4000	30.92	105	40-130
13C12-1,2,3,6,7,8-HxCDF	4000	33.53	107	40-130
13C12-1,2,3,4,6,7,8-HpCDF	4000	35.06	105	25-130
Cleanup Standard	pg			
13C12-1,2,3,7,8,9-HxCDF	4000	34.29	95	40-130

Homologue Group Totals	# peaks	Conc. pg	EDL pg		LQL
Total-TCDD	5	31.3	2.0		25
Total-PeCDD	0	<1.5	1.5	U	130
Total-HxCDD	6	142	1.9		130
Total-HpCDD	2	411	4.3		130
Total-TCDF	14	192	1.9		25
Total-PeCDF	5	63.8	1.3		130
Total-HxCDF	5	65.8	2.5		130
Total-HpCDF	1	22.9	1.5		130

Toxic Equivalency - (WHO 2005)	**pg**
Lower Bound PCDD/F TEQ (WHO 2005)	11.5
Mid Point PCDD/F TEQ (WHO 2005)	22.6
Upper Bound PCDD/F TEQ (WHO 2005)	22.6

EDL	Indicates the Estimated Detection Limit, based on the measured background noise for this target in this sample.
TEF	Indicates the Toxic Equivalency Factor
TEQ	Indicates the Toxic Equivalency
M	Indicates that a peak has been manually integrated.
J	Indicates that a target analyte was detected below the calibrated range.
R	Indicates that the ion abundance ratio for this compound did not meet the acceptance criterion.
B	Indicates that this target was detected in the blank at greater than 10% of the sample concentration.
LQL	Lower Quantification Limit, based on the lowest calibration level corrected for sample size, splits and dilutions.
EMPC	Estimated Maximum Possible Concentration – elevated detection limit due to interference or positive id criterion failure

© Mostardi Platt

ALS Life sciences

Sample Analysis Report

Sample Name	TEST #2	Sampling Date	27-Jul-17
ALS Sample ID	L1972055-2	Extraction Date	15-Aug-17
Analysis Method	EPA M23	Sample Size	1 Train
Analysis Type	Sample	Percent Moisture	n/a
Sample Matrix	Stack	Split Ratio	2

Approved:
T.Patterson
--e-signature--
24-Aug-2017

Run Information	**Run 1**
Filename	7-170823A24
Run Date	24-Aug-17 03:37
Final Volume	25 uL
Dilution Factor	1
Analysis Units	pg
Instrument - Column	HRMS-7 DB5MSUSP303114H

Target Analytes	TEF (WHO 2005)	Ret. Time	Conc. pg	EDL pg	Flags	EMPC pg	LQL
2,3,7,8-TCDD	1	27.63	<6.0	6.0	M,U	5.9	25
1,2,3,7,8-PeCDD	1	31.89	21.1	5.2	M,J		130
1,2,3,4,7,8-HxCDD	0.1	33.98	18.0	8.6	M,J		130
1,2,3,6,7,8-HxCDD	0.1	34.02	37.4	6.7	M,J		130
1,2,3,7,8,9-HxCDD	0.1	34.15	36.9	7.4	M,J		130
1,2,3,4,6,7,8-HpCDD	0.01	35.63	412	9.9			130
OCDD	0.0003	37.11	1750	7.6			250
2,3,7,8-TCDF	0.1	26.69	<16	8.1	M,J,R	16	25
1,2,3,7,8-PeCDF	0.03	30.93	7.87	4.4	M,J		130
2,3,4,7,8-PeCDF	0.3	31.68	21.2	4.2	J		130
1,2,3,4,7,8-HxCDF	0.1	33.47	29.4	6.6	M,J		130
1,2,3,6,7,8-HxCDF	0.1	33.54	19.3	5.4	M,J		130
2,3,4,6,7,8-HxCDF	0.1	33.89	<13	6.1	M,J,R	13	130
1,2,3,7,8,9-HxCDF	0.1	NotFnd	<7.5	7.5	U		130
1,2,3,4,6,7,8-HpCDF	0.01	35.07	69.7	5.4	J		130
1,2,3,4,7,8,9-HpCDF	0.01	35.88	<11	7.0	M,J,R	11	130
OCDF	0.0003	37.20	62.4	7.1	J,B		250

Field Spike Standards	pg		% Rec	Limits
37Cl4-2,3,7,8-TCDD	1000	27.63	97	70-130
13C12-1,2,3,4,7,8-HxCDD	4000	33.96	107	70-130
13C12-2,3,4,7,8-PeCDF	4000	31.66	101	70-130
13C12-1,2,3,4,7,8-HxCDF	4000	33.46	110	70-130
13C12-1,2,3,4,7,8,9-HpCDF	4000	35.87	105	70-130
Extraction Standards				
13C12-2,3,7,8-TCDD	4000	27.60	78	40-130
13C12-1,2,3,7,8-PeCDD	4000	31.88	75	40-130
13C12-1,2,3,6,7,8-HxCDD	4000	34.02	95	40-130
13C12-1,2,3,4,6,7,8-HpCDD	4000	35.62	113	25-130
13C12-OCDD	8000	37.10	114	25-130
13C12-2,3,7,8-TCDF	4000	26.69	81	40-130
13C12-1,2,3,7,8-PeCDF	4000	30.92	75	40-130
13C12-1,2,3,6,7,8-HxCDF	4000	33.53	94	40-130
13C12-1,2,3,4,6,7,8-HpCDF	4000	35.06	100	25-130
Cleanup Standard	pg			
13C12-1,2,3,7,8,9-HxCDF	4000	34.29	97	40-130

Homologue Group Totals	# peaks	Conc. pg	EDL pg	LQL
Total-TCDD	2	27.1	6.0	25
Total-PeCDD	2	56.2	5.2	130
Total-HxCDD	4	110	8.6	130
Total-HpCDD	2	759	9.9	130
Total-TCDF	7	133	8.1	25
Total-PeCDF	6	128	4.4	130
Total-HxCDF	2	48.8	7.5	130
Total-HpCDF	2	106	7.0	130

Toxic Equivalency - (WHO 2005)	**pg**
Lower Bound PCDD/F TEQ (WHO 2005)	47.2
Mid Point PCDD/F TEQ (WHO 2005)	53.5
Upper Bound PCDD/F TEQ (WHO 2005)	56.9

EDL	Indicates the Estimated Detection Limit, based on the measured background noise for this target in this sample.
TEF	Indicates the Toxic Equivalency Factor
TEQ	Indicates the Toxic Equivalency
M	Indicates that a peak has been manually integrated.
U	Indicates that this compound was not detected above the EDL.
J	Indicates that a target analyte was detected below the calibrated range.
R	Indicates that the ion abundance ratio for this compound did not meet the acceptance criterion.
B	Indicates that this target was detected in the blank at greater than 10% of the sample concentration.
LQL	Lower Quantification Limit, based on the lowest calibration level corrected for sample size, splits and dilutions.
EMPC	Estimated Maximum Possible Concentration – elevated detection limit due to interference or positive id criterion failure

© Mostardi Platt

ALS Life sciences

Sample Analysis Report

Sample Name	TEST #4	Sampling Date	1-Aug-17
ALS Sample ID	L1972055-3	Extraction Date	15-Aug-17
Analysis Method	EPA M23	Sample Size	1 Train
Analysis Type	Sample	Percent Moisture	n/a
Sample Matrix	Stack	Split Ratio	2

Approved:
T.Patterson
--e-signature--
24-Aug-2017

Run Information	**Run 1**
Filename	7-170823A25
Run Date	24-Aug-17 04:20
Final Volume	25 uL
Dilution Factor	1
Analysis Units	pg
Instrument - Column	HRMS-7 DB5MSUSP303114H

Target Analytes	**TEF (WHO 2005)**	**Ret. Time**	**Conc. pg**	**EDL pg**	**Flags**	**EMPC pg**	**LQL**
2,3,7,8-TCDD	1	NotFnd	<2.2	2.2	U		25
1,2,3,7,8-PeCDD	1	31.90	5.27	2.6	M,J		130
1,2,3,4,7,8-HxCDD	0.1	33.98	<3.8	3.6	M,J,R	3.8	130
1,2,3,6,7,8-HxCDD	0.1	34.02	16.8	2.8	M,J		130
1,2,3,7,8,9-HxCDD	0.1	34.15	<14	3.1	M,J,R	14	130
1,2,3,4,6,7,8-HpCDD	0.01	35.64	263	3.1			130
OCDD	0.0003	37.12	1290	3.4			250
2,3,7,8-TCDF	0.1	26.72	7.66	3.1	J		25
1,2,3,7,8-PeCDF	0.03	30.94	6.02	2.2	M,J		130
2,3,4,7,8-PeCDF	0.3	31.67	9.95	2.1	M,J		130
1,2,3,4,7,8-HxCDF	0.1	33.48	8.10	3.3	J		130
1,2,3,6,7,8-HxCDF	0.1	33.55	6.73	2.7	M,J		130
2,3,4,6,7,8-HxCDF	0.1	33.88	7.23	3.0	M,J		130
1,2,3,7,8,9-HxCDF	0.1	34.31	<3.7	3.7	M,U	2.3	130
1,2,3,4,6,7,8-HpCDF	0.01	35.07	37.6	2.3	J		130
1,2,3,4,7,8,9-HpCDF	0.01	35.89	3.73	3.0	M,J		130
OCDF	0.0003	37.21	43.5	3.4	M,J,B		250

Field Spike Standards	**pg**		**% Rec**	**Limits**
37Cl4-2,3,7,8-TCDD	1000	27.63	96	70-130
13C12-1,2,3,4,7,8-HxCDD	4000	33.96	110	70-130
13C12-2,3,4,7,8-PeCDF	4000	31.67	98	70-130
13C12-1,2,3,4,7,8-HxCDF	4000	33.47	113	70-130
13C12-1,2,3,4,7,8,9-HpCDF	4000	35.88	109	70-130
Extraction Standards				
13C12-2,3,7,8-TCDD	4000	27.60	91	40-130
13C12-1,2,3,7,8-PeCDD	4000	31.88	97	40-130
13C12-1,2,3,6,7,8-HxCDD	4000	34.02	107	40-130
13C12-1,2,3,4,6,7,8-HpCDD	4000	35.63	124	25-130
13C12-OCDD	8000	37.11	118	25-130
13C12-2,3,7,8-TCDF	4000	26.69	92	40-130
13C12-1,2,3,7,8-PeCDF	4000	30.93	98	40-130
13C12-1,2,3,6,7,8-HxCDF	4000	33.54	102	40-130
13C12-1,2,3,4,6,7,8-HpCDF	4000	35.07	106	25-130
Cleanup Standard	**pg**			
13C12-1,2,3,7,8,9-HxCDF	4000	34.29	93	40-130

Homologue Group Totals	**# peaks**	**Conc. pg**	**EDL pg**	**LQL**
Total-TCDD	1	2.96	2.2	25
Total-PeCDD	5	38.3	2.6	130
Total-HxCDD	3	57.4	3.6	130
Total-HpCDD	2	471	3.1	130
Total-TCDF	13	125	3.1	25
Total-PeCDF	9	96.7	2.2	130
Total-HxCDF	6	72.3	3.7	130
Total-HpCDF	2	41.4	3.0	130

Toxic Equivalency - (WHO 2005)	**pg**
Lower Bound PCDD/F TEQ (WHO 2005)	16.5
Mid Point PCDD/F TEQ (WHO 2005)	19.6
Upper Bound PCDD/F TEQ (WHO 2005)	20.9

EDL	Indicates the Estimated Detection Limit, based on the measured background noise for this target in this sample.
TEF	Indicates the Toxic Equivalency Factor
TEQ	Indicates the Toxic Equivalency
M	Indicates that a peak has been manually integrated.
U	Indicates that this compound was not detected above the EDL.
J	Indicates that a target analyte was detected below the calibrated range.
R	Indicates that the ion abundance ratio for this compound did not meet the acceptance criterion.
B	Indicates that this target was detected in the blank at greater than 10% of the sample concentration.
LQL	Lower Quantification Limit, based on the lowest calibration level corrected for sample size, splits and dilutions.
EMPC	Estimated Maximum Possible Concentration - elevated detection limit due to interference or positive Id criterion failure

© Mostardi Platt

ALS Life sciences

Sample Analysis Report

Sample Name	**BLANK**	Sampling Date	1-Aug-17		Approved:
ALS Sample ID	L1972055-4	Extraction Date	15-Aug-17		*T.Patterson*
Analysis Method	EPA M23	Sample Size	1	Train	--e-signature--
Analysis Type	Sample	Percent Moisture	n/a		24-Aug-2017
Sample Matrix	Stack	Split Ratio			

Run Information	**Run 1**
Filename	7-170823A19
Run Date	24-Aug-17 00:04
Final Volume	25 uL
Dilution Factor	1
Analysis Units	pg
Instrument - Column	HRMS-7 DB5MSUSP303114H

Target Analytes	**TEF (WHO 2005)**	**Ret. Time**	**Conc. pg**	**EDL pg**	**Flags**	**EMPC pg**	**LQL**
2,3,7,8-TCDD	1	NotFnd	<5.3	5.3	U		25
1,2,3,7,8-PeCDD	1	NotFnd	<4.5	4.5	U		130
1,2,3,4,7,8-HxCDD	0.1	NotFnd	<5.1	5.1	U		130
1,2,3,6,7,8-HxCDD	0.1	34.01	4.56	4.0	M,J		130
1,2,3,7,8,9-HxCDD	0.1	NotFnd	<4.4	4.4	U		130
1,2,3,4,6,7,8-HpCDD	0.01	35.61	<3.7	3.4	M,J,R	3.7	130
OCDD	0.0003	37.10	<17	5.9	M,J,R	17	250
2,3,7,8-TCDF	0.1	NotFnd	<3.8	3.8	U		25
1,2,3,7,8-PeCDF	0.03	NotFnd	<3.2	3.2	U		130
2,3,4,7,8-PeCDF	0.3	NotFnd	<3.0	3.0	U		130
1,2,3,4,7,8-HxCDF	0.1	33.49	<2.9	2.9	M,U	2.7	130
1,2,3,6,7,8-HxCDF	0.1	NotFnd	<2.4	2.4	U		130
2,3,4,6,7,8-HxCDF	0.1	33.89	<3.7	2.7	M,J,R	3.7	130
1,2,3,7,8,9-HxCDF	0.1	34.30	<3.4	3.3	M,J,R	3.4	130
1,2,3,4,6,7,8-HpCDF	0.01	35.06	<4.2	4.2	M,U	2.7	130
1,2,3,4,7,8,9-HpCDF	0.01	NotFnd	<5.4	5.4	U		130
OCDF	0.0003	37.20	<10	6.3	J,R	10	250

Field Spike Standards	**pg**		**% Rec**	**Limits**
37Cl4-2,3,7,8-TCDD	1000	27.63	97	70-130
13C12-1,2,3,4,7,8-HxCDD	4000	33.96	110	70-130
13C12-2,3,4,7,8-PeCDF	4000	31.66	98	70-130
13C12-1,2,3,4,7,8-HxCDF	4000	33.46	110	70-130
13C12-1,2,3,4,7,8,9-HpCDF	4000	35.87	99	70-130
Extraction Standards				
13C12-2,3,7,8-TCDD	4000	27.60	76	40-130
13C12-1,2,3,7,8-PeCDD	4000	31.88	78	40-130
13C12-1,2,3,6,7,8-HxCDD	4000	34.02	96	40-130
13C12-1,2,3,4,6,7,8-HpCDD	4000	35.62	99	25-130
13C12-OCDD	8000	37.10	101	25-130
13C12-2,3,7,8-TCDF	4000	26.69	78	40-130
13C12-1,2,3,7,8-PeCDF	4000	30.93	78	40-130
13C12-1,2,3,6,7,8-HxCDF	4000	33.53	92	40-130
13C12-1,2,3,4,6,7,8-HpCDF	4000	35.06	93	25-130
Cleanup Standard	**pg**			
13C12-1,2,3,7,8,9-HxCDF	4000	34.29	91	40-130

Homologue Group Totals	**# peaks**	**Conc. pg**	**EDL pg**		
Total-TCDD	0	<5.3	5.3	U	25
Total-PeCDD	0	<4.5	4.5	U	130
Total-HxCDD	0	<5.1	5.1	U	130
Total-HpCDD	0	<3.4	3.4	U	130
Total-TCDF	0	<3.8	3.8	U	25
Total-PeCDF	0	<3.2	3.2	U	130
Total-HxCDF	0	<3.3	3.3	U	130
Total-HpCDF	0	<5.4	5.4	U	130

Toxic Equivalency - (WHO 2005)	**pg**
Lower Bound PCDD/F TEQ (WHO 2005)	0.456
Mid Point PCDD/F TEQ (WHO 2005)	7.59
Upper Bound PCDD/F TEQ (WHO 2005)	14.0

EDL	Indicates the Estimated Detection Limit, based on the measured background noise for this target in this sample.
TEF	Indicates the Toxic Equivalency Factor
TEQ	Indicates the Toxic Equivalency
M	Indicates that a peak has been manually integrated.
U	Indicates that this compound was not detected above the EDL.
J	Indicates that a target analyte was detected below the calibrated range.
R	Indicates that the ion abundance ratio for this compound did not meet the acceptance criterion.
LQL	Lower Quantification Limit, based on the lowest calibration level corrected for sample size, splits and dilutions.
EMPC	Estimated Maximum Possible Concentration – elevated detection limit due to interference or positive id criterion failure

© Mostardi Platt

ALS Life sciences

Laboratory Method Blank Analysis Report

Sample Name	**Method Blank**	Sampling Date	n/a
ALS Sample ID	WG2590247-1	Extraction Date	15-Aug-17
Analysis Method	EPA M23	Sample Size	1 Train
Analysis Type	Blank	Percent Moisture	n/a
Sample Matrix	QC	Split Ratio	2

Approved:
T.Patterson
--e-signature--
24-Aug-2017

Run Information	**Run 1**
Filename	7-170823A16
Run Date	23-Aug-17 21:55
Final Volume	25 uL
Dilution Factor	1
Analysis Units	pg
Instrument - Column	HRMS-7 DB5MSUSP303114H

Target Analytes	**TEF (WHO 2005)**	**Ret. Time**	**Conc. pg**	**EDL pg**	**Flags**	**EMPC pg**	**LQL**
2,3,7,8-TCDD	1	NotFnd	<6.4	6.4	U		25
1,2,3,7,8-PeCDD	1	NotFnd	<4.0	4.0	U		130
1,2,3,4,7,8-HxCDD	0.1	NotFnd	<8.1	8.1	U		130
1,2,3,6,7,8-HxCDD	0.1	NotFnd	<6.3	6.3	U		130
1,2,3,7,8,9-HxCDD	0.1	NotFnd	<7.0	7.0	U		130
1,2,3,4,6,7,8-HpCDD	0.01	35.63	<5.0	2.5	M,J,R	5.0	130
OCDD	0.0003	37.14	14.2	6.3	M,J		250
2,3,7,8-TCDF	0.1	NotFnd	<3.9	3.9	U		25
1,2,3,7,8-PeCDF	0.03	NotFnd	<3.0	3.0	U		130
2,3,4,7,8-PeCDF	0.3	NotFnd	<2.9	2.9	U		130
1,2,3,4,7,8-HxCDF	0.1	33.47	<4.0	4.0	M,U	3.2	130
1,2,3,6,7,8-HxCDF	0.1	33.55	<3.3	3.3	M,U	1.5	130
2,3,4,6,7,8-HxCDF	0.1	33.88	<3.7	3.7	M,U	1.9	130
1,2,3,7,8,9-HxCDF	0.1	NotFnd	<4.6	4.6	U		130
1,2,3,4,6,7,8-HpCDF	0.01	NotFnd	<2.5	2.5	U		130
1,2,3,4,7,8,9-HpCDF	0.01	NotFnd	<3.2	3.2	U		130
OCDF	0.0003	37.21	9.55	3.2	M,J		250

Field Spike Standards	**% Rec**
37Cl4-2,3,7,8-TCDD	NS
13C12-1,2,3,4,7,8-HxCDD	NS
13C12-2,3,4,7,8-PeCDF	NS
13C12-1,2,3,4,7,8-HxCDF	NS
13C12-1,2,3,4,7,8,9-HpCDF	NS

Extraction Standards				
13C12-2,3,7,8-TCDD	4000	27.60	70	40-130
13C12-1,2,3,7,8-PeCDD	4000	31.88	75	40-130
13C12-1,2,3,6,7,8-HxCDD	4000	34.02	85	40-130
13C12-1,2,3,4,6,7,8-HpCDD	4000	35.63	114	25-130
13C12-OCDD	8000	37.11	118	25-130
13C12-2,3,7,8-TCDF	4000	26.69	73	40-130
13C12-1,2,3,7,8-PeCDF	4000	30.93	73	40-130
13C12-1,2,3,6,7,8-HxCDF	4000	33.53	87	40-130
13C12-1,2,3,4,6,7,8-HpCDF	4000	35.06	106	25-130

Cleanup Standard	**pg**			
13C12-1,2,3,7,8,9-HxCDF	4000	34.29	101	40-130

Homologue Group Totals	**# peaks**	**Conc. pg**	**EDL pg**		
Total-TCDD	0	<6.4	6.4	U	25
Total-PeCDD	0	<4.0	4.0	U	130
Total-HxCDD	0	<8.1	8.1	U	130
Total-HpCDD	0	<2.5	2.5	U	130
Total-TCDF	0	<3.9	3.9	U	25
Total-PeCDF	0	<3.0	3.0	U	130
Total-HxCDF	0	<4.6	4.6	U	130
Total-HpCDF	0	<3.2	3.2	U	130

Toxic Equivalency - (WHO 2005)	**pg**
Lower Bound PCDD/F TEQ (WHO 2005)	0.00713
Mid Point PCDD/F TEQ (WHO 2005)	7.81
Upper Bound PCDD/F TEQ (WHO 2005)	15.6

EDL	Indicates the Estimated Detection Limit, based on the measured background noise for this target in this sample.
TEF	Indicates the Toxic Equivalency Factor TEQ Indicates the Toxic Equivalency
M	Indicates that a peak has been manually integrated.
U	Indicates that this compound was not detected above the EDL.
J	Indicates that a target analyte was detected below the calibrated range.
R	Indicates that the ion abundance ratio for this compound did not meet the acceptance criterion.
LQL	Lower Quantification Limit, based on the lowest calibration level corrected for sample size, splits and dilutions.
EMPC	Estimated Maximum Possible Concentration - elevated detection limit due to interference or positive id criterion failure
NS	Indicates that this standard was not spiked to sample

© Mostardi Platt

ALS Life sciences

Laboratory Method Blank Analysis Report

Sample Name	**Method Blank**	Sampling Date	n/a
ALS Sample ID	WG2590247-4	Extraction Date	15-Aug-17
Analysis Method	EPA M23	Sample Size	1 Train
Analysis Type	Blank	Percent Moisture	n/a
Sample Matrix	QC	Split Ratio	2

Approved:
T.Patterson
--e-signature--
24-Aug-2017

Run Information	**Run 1**
Filename	7-170823A17
Run Date	23-Aug-17 22:38
Final Volume	25 uL
Dilution Factor	1
Analysis Units	pg
Instrument - Column	HRMS-7 DB5MSUSP303114H

Target Analytes	**TEF (WHO 2005)**	**Ret. Time**	**Conc. pg**	**EDL pg**	**Flags**	**EMPC pg**	**LQL**
2,3,7,8-TCDD	1	NotFnd	<2.2	2.2	U		25
1,2,3,7,8-PeCDD	1	NotFnd	<1.8	1.8	U		130
1,2,3,4,7,8-HxCDD	0.1	NotFnd	<2.4	2.4	U		130
1,2,3,6,7,8-HxCDD	0.1	NotFnd	<1.9	1.9	U		130
1,2,3,7,8,9-HxCDD	0.1	NotFnd	<2.1	2.1	U		130
1,2,3,4,6,7,8-HpCDD	0.01	NotFnd	<2.0	2.0	U		130
OCDD	0.0003	37.11	<7.8	1.9	J,R	7.8	250
2,3,7,8-TCDF	0.1	NotFnd	<1.8	1.8	U		25
1,2,3,7,8-PeCDF	0.03	NotFnd	<1.4	1.4	U		130
2,3,4,7,8-PeCDF	0.3	NotFnd	<1.4	1.4	U		130
1,2,3,4,7,8-HxCDF	0.1	NotFnd	<1.9	1.9	U		130
1,2,3,6,7,8-HxCDF	0.1	NotFnd	<1.6	1.6	U		130
2,3,4,6,7,8-HxCDF	0.1	NotFnd	<1.7	1.7	U		130
1,2,3,7,8,9-HxCDF	0.1	NotFnd	<2.2	2.2	U		130
1,2,3,4,6,7,8-HpCDF	0.01	35.06	2.03	0.88	M,J		130
1,2,3,4,7,8,9-HpCDF	0.01	NotFnd	<1.1	1.1	U		130
OCDF	0.0003	37.21	<4.0	1.6	M,J,R	4.0	250

Field Spike Standards	**% Rec**
37Cl4-2,3,7,8-TCDD	NS
13C12-1,2,3,4,7,8-HxCDD	NS
13C12-2,3,4,7,8-PeCDF	NS
13C12-1,2,3,4,7,8-HxCDF	NS
13C12-1,2,3,4,7,8,9-HpCDF	NS

Extraction Standards				
13C12-2,3,7,8-TCDD	4000	27.59	93	40-130
13C12-1,2,3,7,8-PeCDD	4000	31.87	90	40-130
13C12-1,2,3,6,7,8-HxCDD	4000	34.01	103	40-130
13C12-1,2,3,4,6,7,8-HpCDD	4000	35.62	132	25-130
13C12-OCDD	8000	37.09	143	25-130
13C12-2,3,7,8-TCDF	4000	26.68	93	40-130
13C12-1,2,3,7,8-PeCDF	4000	30.92	91	40-130
13C12-1,2,3,6,7,8-HxCDF	4000	33.52	107	40-130
13C12-1,2,3,4,6,7,8-HpCDF	4000	35.05	119	25-130

Cleanup Standard	**pg**			
13C12-1,2,3,7,8,9-HxCDF	4000	34.28	94	40-130

Homologue Group Totals	**# peaks**	**Conc. pg**	**EDL pg**		
Total-TCDD	0	<2.2	2.2	U	25
Total-PeCDD	0	<1.8	1.8	U	130
Total-HxCDD	0	<2.4	2.4	U	130
Total-HpCDD	0	<2.0	2.0	U	130
Total-TCDF	0	<1.8	1.8	U	25
Total-PeCDF	0	<1.4	1.4	U	130
Total-HxCDF	0	<2.2	2.2	U	130
Total-HpCDF	1	2.03	1.1		130

Toxic Equivalency - (WHO 2005)	**pg**
Lower Bound PCDD/F TEQ (WHO 2005)	0.0203
Mid Point PCDD/F TEQ (WHO 2005)	3.05
Upper Bound PCDD/F TEQ (WHO 2005)	6.08

EDL	Indicates the Estimated Detection Limit, based on the measured background noise for this target in this sample.
TEF	Indicates the Toxic Equivalency Factor
TEQ	Indicates the Toxic Equivalency
M	Indicates that a peak has been manually integrated.
U	Indicates that this compound was not detected above the EDL.
J	indicates that a target analyte was detected below the calibrated range.
R	Indicates that the ion abundance ratio for this compound did not meet the acceptance criterion.
LQL	Lower Quantification Limit, based on the lowest calibration level corrected for sample size, splits and dilutions.
EMPC	Estimated Maximum Possible Concentration – elevated detection limit due to interference or positive id criterion failure
NS	Indicates that this standard was not spiked to sample

© Mostardi Platt

ALS Life sciences

Laboratory Control Sample Analysis Report

Sample Name	**Laboratory Control Sample**	Sampling Date	n/a	
ALS Sample ID	WG2590247-2	Extraction Date	15-Aug-17	
Analysis Method	EPA M23	Sample Size	1	n/a
Analysis Type	LCS	Percent Moisture	n/a	
Sample Matrix	QC	Split Ratio	2	

Approved:
T.Patterson
--e-signature--
24-Aug-2017

Run Information	**Run 1**
Filename	7-170823A11
Run Date	23-Aug-17 18:21
Final Volume	25 uL
Dilution Factor	1
Analysis Units	%
Instrument - Column	HRMS-7 DB5MSUSP303114H

Target Analytes	**pg**	**Ret. Time**	**% Rec**	**Limits**	**Flags**
2,3,7,8-TCDD	400	27.62	95	70-130	
1,2,3,7,8-PeCDD	2000	31.89	107	70-130	
1,2,3,4,7,8-HxCDD	2000	33.97	117	70-130	
1,2,3,6,7,8-HxCDD	2000	34.02	109	70-130	
1,2,3,7,8,9-HxCDD	2000	34.14	119	70-130	
1,2,3,4,6,7,8-HpCDD	2000	35.63	96	70-130	
OCDD	4000	37.11	98	70-130	
2,3,7,8-TCDF	400	26.69	96	70-130	
1,2,3,7,8-PeCDF	2000	30.93	100	70-130	
2,3,4,7,8-PeCDF	2000	31.67	94	70-130	
1,2,3,4,7,8-HxCDF	2000	33.47	117	70-130	
1,2,3,6,7,8-HxCDF	2000	33.54	118	70-130	
2,3,4,6,7,8-HxCDF	2000	33.87	113	70-130	
1,2,3,7,8,9-HxCDF	2000	34.29	113	70-130	
1,2,3,4,6,7,8-HpCDF	2000	35.07	97	70-130	
1,2,3,4,7,8,9-HpCDF	2000	35.88	94	70-130	
OCDF	4000	37.20	96	70-130	
Field Spike Standards			**% Rec**		
37Cl4-2,3,7,8-TCDD			NS		
13C12-1,2,3,4,7,8-HxCDD			NS		
13C12-2,3,4,7,8-PeCDF			NS		
13C12-1,2,3,4,7,8-HxCDF			NS		
13C12-1,2,3,4,7,8,9-HpCDF			NS		
Extraction Standards					
13C12-2,3,7,8-TCDD	4000	27.59	58	40-130	
13C12-1,2,3,7,8-PeCDD	4000	31.87	63	40-130	
13C12-1,2,3,6,7,8-HxCDD	4000	34.02	64	40-130	
13C12-1,2,3,4,6,7,8-HpCDD	4000	35.62	76	25-130	
13C12-OCDD	8000	37.10	66	25-130	
13C12-2,3,7,8-TCDF	4000	26.68	58	40-130	
13C12-1,2,3,7,8-PeCDF	4000	30.92	60	40-130	
13C12-1,2,3,6,7,8-HxCDF	4000	33.52	63	40-130	
13C12-1,2,3,4,6,7,8-HpCDF	4000	35.06	70	25-130	
Cleanup Standard	**pg**				
13C12-1,2,3,7,8,9-HxCDF	4000	34.28	76	40-130	

NS Indicates that this standard was not spiked to sample

© Mostardi Platt

PCDD/PCDF TEST RESULTS SUMMARY
Run 1
Northern Metals, LLC
Pacific Street Yard
Common Stack STRU1
July 26, 2017

Analytes	Sample Catch			Concentration	Emissions	TEQ Factor Results			Blank
	(pg)	(pg-Blank)	(ug)	(ug/dcsm)	(ug/hr)	TEQ Factor	(ug/dscm)	(ug/hr)	(pg)
2378-TCDD	0.00	0.00	0.00E+00	0.00E+00	0.00	1.0	0.00E+00	0.00	0
12378-PeCDD	0.00	0.00	0.00E+00	0.00E+00	0.00	1.0	0.00E+00	0.00	0
123478-HxCDD	0.00	0.00	0.00E+00	0.00E+00	0.00	0.1	0.00E+00	0.00	0
123678-HxCDD	15.60	11.04	1.10E-05	2.05E-06	0.32	0.1	2.05E-07	0.03	4.56
123789-HxCDD	14.60	14.60	1.46E-05	2.71E-06	0.43	0.1	2.71E-07	0.04	0
1234678-HpCDD	217.00	217.00	2.17E-04	4.03E-05	6.36	0.01	4.03E-07	0.06	0
OCDD	1,080.00	1,080.00	1.08E-03	2.01E-04	31.65	0.0003	6.02E-08	0.01	0
2378 -TCDF	9.64	9.64	9.64E-06	1.79E-06	0.28	0.1	1.79E-07	0.03	0
12378-PeCDF	6.78	6.78	6.78E-06	1.26E-06	0.20	0.03	3.78E-08	0.01	0
23478-PeCDF	10.10	10.10	1.01E-05	1.88E-06	0.30	0.3	5.63E-07	0.09	0
123478-HxCDF	0.00	0.00	0.00E+00	0.00E+00	0.00	0.1	0.00E+00	0.00	0
123678-HxCDF	6.38	6.38	6.38E-06	1.19E-06	0.19	0.1	1.19E-07	0.02	0
234678-HxCDF	8.52	8.52	8.52E-06	1.58E-06	0.25	0.1	1.58E-07	0.02	0
123789-HxCDF	3.11	3.11	3.11E-06	5.78E-07	0.09	0.1	5.78E-08	0.01	0
1234678-HpCDF	0.00	0.00	0.00E+00	0.00E+00	0.00	0.01	0.00E+00	0.00	0
1234789-HpCDF	0.00	0.00	0.00E+00	0.00E+00	0.00	0.01	0.00E+00	0.00	0
OCDF	35.00	35.00	3.50E-05	6.51E-06	1.03	0.0003	1.95E-09	0.00	0
Total TCDD	31.30	31.30	3.13E-05	5.82E-06	0.92				0
Total PeCDD	0.00	0.00	0.00E+00	0.00E+00	0.00				0
Total HxCDD	142.00	142.00	1.42E-04	2.64E-05	4.16				0
Total HpCDD	411.00	411.00	4.11E-04	7.64E-05	12.04				0
Total OCDD	1,080.00	1,080.00	1.08E-03	2.01E-04	31.65				0
Total TCDF	192.00	192.00	1.92E-04	3.57E-05	5.63				0
Total PeCDF	63.80	63.80	6.38E-05	1.19E-05	1.87				0
Total HxCDF	65.80	65.80	6.58E-05	1.22E-05	1.93				0
Total HpCDF	22.90	22.90	2.29E-05	4.26E-06	0.67				0
Total OCDF	35.00	35.00	3.50E-05	6.51E-06	1.03				0
Total PCDD/PCDF		2,043.80	2.04E-03	3.80E-04	59.89				
TEQ Total							2.06E-06	0.32	
Sample volume (Vmstd, dscf)	189.952								
Volumetric Air Flow (DSCFM)	92,768								
Fd-Factor dscf/MMBtu									
Average % CO_2 by volume, dry	0.00								
Average % O_2 by volume, dry	20.80								

© Mostardi Platt

PCDD/PCDF TEST RESULTS SUMMARY
Run 2
Northern Metals, LLC
Pacific Street Yard
Common Stack STRU1
July 27, 2017

	Sample Catch			Concentration	Emissions	TEQ Factor Results			Blank
Analytes	(pg)	(pg-Blank)	(ug)	(ug/dcsm)	(ug/hr)	TEQ Factor	(ug/dscm)	(ug/hr)	(pg)
2378-TCDD	0.00	0.00	0.00E+00	0.00E+00	0.00	1.0	0.00E+00	0.00	0
12378-PeCDD	21.10	21.10	2.11E-05	3.90E-06	0.61	1.0	3.90E-06	0.61	0
123478-HxCDD	18.00	18.00	1.80E-05	3.33E-06	0.52	0.1	3.33E-07	0.05	0
123678-HxCDD	37.40	32.84	3.28E-05	6.07E-06	0.95	0.1	6.07E-07	0.09	4.56
123789-HxCDD	36.90	36.90	3.69E-05	6.82E-06	1.06	0.1	6.82E-07	0.11	0
1234678-HpCDD	412.00	412.00	4.12E-04	7.62E-05	11.86	0.01	7.62E-07	0.12	0
OCDD	1,750.00	1,750.00	1.75E-03	3.24E-04	50.38	0.0003	9.71E-08	0.02	0
2378 -TCDF	0.00	0.00	0.00E+00	0.00E+00	0.00	0.1	0.00E+00	0.00	0
12378-PeCDF	7.87	7.87	7.87E-06	1.46E-06	0.23	0.03	4.37E-08	0.01	0
23478-PeCDF	21.20	21.20	2.12E-05	3.92E-06	0.61	0.3	1.18E-06	0.18	0
123478-HxCDF	29.40	29.40	2.94E-05	5.44E-06	0.85	0.1	5.44E-07	0.08	0
123678-HxCDF	19.30	19.30	1.93E-05	3.57E-06	0.56	0.1	3.57E-07	0.06	0
234678-HxCDF	0.00	0.00	0.00E+00	0.00E+00	0.00	0.1	0.00E+00	0.00	0
123789-HxCDF	0.00	0.00	0.00E+00	0.00E+00	0.00	0.1	0.00E+00	0.00	0
1234678-HpCDF	69.70	69.70	6.97E-05	1.29E-05	2.01	0.01	1.29E-07	0.02	0
1234789-HpCDF	0.00	0.00	0.00E+00	0.00E+00	0.00	0.01	0.00E+00	0.00	0
OCDF	62.40	62.40	6.24E-05	1.15E-05	1.80	0.0003	3.46E-09	0.00	0
Total TCDD	27.10	27.10	2.71E-05	5.01E-06	0.78				0
Total PeCDD	56.20	56.20	5.62E-05	1.04E-05	1.62				0
Total HxCDD	110.00	110.00	1.10E-04	2.03E-05	3.17				0
Total HpCDD	759.00	759.00	7.59E-04	1.40E-04	21.85				0
Total OCDD	1,750.00	1,750.00	1.75E-03	3.24E-04	50.38				0
Total TCDF	133.00	133.00	1.33E-04	2.46E-05	3.83				0
Total PeCDF	128.00	128.00	1.28E-04	2.37E-05	3.69				0
Total HxCDF	48.80	48.80	4.88E-05	9.02E-06	1.40				0
Total HpCDF	106.00	106.00	1.06E-04	1.96E-05	3.05				0
Total OCDF	62.40	62.40	6.24E-05	1.15E-05	1.80				0
Total PCDD/PCDF		3,180.50	3.18E-03	5.88E-04	91.57				
TEQ Total							8.64E-06	1.34	
Sample volume (Vmstd, dscf)	190.986								
Volumetric Air Flow (DSCFM)	91,641								
Fd-Factor dscf/MMBtu									
Average % CO_2 by volume, dry	0.00								
Average % O_2 by volume, dry	20.80								

© Mostardi Platt

PCDD/PCDF TEST RESULTS SUMMARY
Run 4
Northern Metals, LLC
Pacific Street Yard
Common Stack STRU1
August 1, 2017

	Sample Catch			Concentration	Emissions	TEQ Factor Results			Blank
Analytes	(pg)	(pg-Blank)	(ug)	(ug/dcsm)	(ug/hr)	TEQ Factor	(ug/dscm)	(ug/hr)	(pg)
2378-TCDD	0.00	0.00	0.00E+00	0.00E+00	0.00	1.0	0.00E+00	0.00	0
12378-PeCDD	5.27	5.27	5.27E-06	9.50E-07	0.15	1.0	9.50E-07	0.15	0
123478-HxCDD	0.00	0.00	0.00E+00	0.00E+00	0.00	0.1	0.00E+00	0.00	0
123678-HxCDD	16.80	12.24	1.22E-05	2.21E-06	0.35	0.1	2.21E-07	0.04	4.56
123789-HxCDD	0.00	0.00	0.00E+00	0.00E+00	0.00	0.1	0.00E+00	0.00	0
1234678-HpCDD	263.00	263.00	2.63E-04	4.74E-05	7.61	0.01	4.74E-07	0.08	0
OCDD	1,290.00	1,290.00	1.29E-03	2.33E-04	37.32	0.0003	6.98E-08	0.01	0
2378 -TCDF	7.66	7.66	7.66E-06	1.38E-06	0.22	0.1	1.38E-07	0.02	0
12378-PeCDF	6.02	6.02	6.02E-06	1.09E-06	0.17	0.03	3.26E-08	0.01	0
23478-PeCDF	9.95	9.95	9.95E-06	1.79E-06	0.29	0.3	5.38E-07	0.09	0
123478-HxCDF	8.10	8.10	8.10E-06	1.46E-06	0.23	0.1	1.46E-07	0.02	0
123678-HxCDF	6.73	6.73	6.73E-06	1.21E-06	0.19	0.1	1.21E-07	0.02	0
234678-HxCDF	7.23	7.23	7.23E-06	1.30E-06	0.21	0.1	1.30E-07	0.02	0
123789-HxCDF	0.00	0.00	0.00E+00	0.00E+00	0.00	0.1	0.00E+00	0.00	0
1234678-HpCDF	37.60	37.60	3.76E-05	6.78E-06	1.09	0.01	6.78E-08	0.01	0
1234789-HpCDF	3.73	3.73	3.73E-06	6.73E-07	0.11	0.01	6.73E-09	0.00	0
OCDF	43.50	43.50	4.35E-05	7.84E-06	1.26	0.0003	2.35E-09	0.00	0
Total TCDD	2.96	2.96	2.96E-06	5.34E-07	0.09				0
Total PeCDD	38.30	38.30	3.83E-05	6.91E-06	1.11				0
Total HxCDD	57.40	57.40	5.74E-05	1.04E-05	1.66				0
Total HpCDD	471.00	471.00	4.71E-04	8.49E-05	13.62				0
Total OCDD	1,290.00	1,290.00	1.29E-03	2.33E-04	37.32				0
Total TCDF	125.00	125.00	1.25E-04	2.25E-05	3.62				0
Total PeCDF	96.70	96.70	9.67E-05	1.74E-05	2.80				0
Total HxCDF	72.30	72.30	7.23E-05	1.30E-05	2.09				0
Total HpCDF	41.40	41.40	4.14E-05	7.47E-06	1.20				0
Total OCDF	43.50	43.50	4.35E-05	7.84E-06	1.26				0
Total PCDD/PCDF		2,238.56	2.24E-03	4.04E-04	64.75				
TEQ Total							2.90E-06	0.46	

Sample volume (Vmstd, dscf)	195.836
Volumetric Air Flow (DSCFM)	94,415
Fd-Factor dscf/MMBtu	
Average % CO_2 by volume, dry	0.00
Average % O_2 by volume, dry	20.80

© Mostardi Platt

ALS Life Sciences
1435 Norjohn Court, Unit 1, Burlington, ON, Canada L7L 0E6
Phone: 905-331-3111, FAX: 905-331-4567

Certificate of Analysis

ALS Project Contact:	Rachael Stolys	**Client Name:**	Mostardi Platt Environmental
ALS Project ID:	21276	**Client Address:**	888 Industrial Drive
ALS WO#:	L1972055		Elmhurst
Date of Report	30-Aug-17		Illinois, 60126
Date of Sample Receipt	9-Aug-17	**Client Contact:**	Jenna Ghanma
		Client Project ID:	M173006 Trinity Consultants / Northern Metals

COMMENTS: **PCB Congeners by EPA 1668C**

PCB Congener Group Totals and Total PCB are a sum of detected values, including EMPC values, consistent with USEPA CLP SOW CBC1.2

Results have been reported from the analysis of a diluted extract due to target levels. Selected results have been reported from the analysis of extracts that have been further diluted and where additional standard has been added for quantification. There results are not therefore inherently recovery-corrected.

The recoveries of the field standard 13C12-PCB-31 are above the method control limit for the sampled trains. All other field standard recoveries are within limits.

For the sample TEST #2, the recovery of the labelled extraction standard 13C12-PCB-15 is above the method control limit. All other recoveries are within limits.

Native target data are not expected to be biased as a result.

Steve Kennedy
Technical Supervisor

Results in this certificate relate only to the samples as submitted to the laboratory.
This report shall not be reproduced, except in full, without the written permission of ALS Canada Ltd.

ALS Life sciences

Sample Analysis summary Report

Sample Name	TEST #1	TEST #2	TEST #4	BLANK
ALS Sample ID	L1972055-1	L1972055-2	L1972055-3	L1972055-4
Sample Size	1	1	1	1
Sample size units	sample	sample	sample	sample
Percent Moisture	n/a	n/a	n/a	n/a
Sample Matrix	Stack	Stack	Stack	Stack
Sampling Date	26-Jul-17	27-Jul-17	1-Aug-17	1-Aug-17
Extraction Date	15-Aug-17	15-Aug-17	15-Aug-17	15-Aug-17
Target Analytes				
Best Aroclor Pattern Match	Aroclor 1232	Aroclor 1232	Aroclor 1232	

© Mostardi Platt

ALS Life Sciences
1435 Norjohn Court, Unit 1, Burlington, ON, Canada L7L 0E6
Phone: 905-331-3111, FAX: 905-331-4567

Certificate of Analysis

ALS Project Contact:	Rachael Stolys	**Client Name:**	Mostardi Platt Environmental
ALS Project ID:	21276	**Client Address:**	888 Industrial Drive Elmhurst Illinois, 60126
ALS WO#:	L1972055		
Date of Report	30-Aug-17		
Date of Sample Receipt	9-Aug-17	**Client Contact:**	Jenna Ghanma
		Client Project ID:	M173006 Trinity Consultants / Northern Metals

COMMENTS: **PCB Congeners by EPA 1668C**

PCB Congener Group Totals and Total PCB are a sum of detected values, including EMPC values, consistent with USEPA CLP SOW CBC1.2

Results have been reported from the analysis of a diluted extract due to target levels. Selected results have been reported from the analysis of extracts that have been further diluted and where additional standard has been added for quantification. There results are not therefore inherently recovery-corrected.

The recoveries of the field standard 13C12-PCB-31 are above the method control limit for the sampled trains. All other field standard recoveries are within limits.

For the sample TEST #2, the recovery of the labelled extraction standard 13C12-PCB-15 is above the method control limit. All other recoveries are within limits.

Native target data are not expected to be biased as a result.

Steve Kennedy
Technical Supervisor

Results in this certificate relate only to the samples as submitted to the laboratory.
This report shall not be reproduced, except in full, without the written permission of ALS Canada Ltd.

ALS Life sciences

Sample Analysis summary Report

Sample Name	TEST #1	TEST #2	TEST #4	BLANK
ALS Sample ID	L1972055-1	L1972055-2	L1972055-3	L1972055-4
Sample Size	1	1	1	1
Sample size units	sample	sample	sample	sample
Percent Moisture	n/a	n/a	n/a	n/a
Sample Matrix	Stack	Stack	Stack	Stack
Sampling Date	26-Jul-17	27-Jul-17	1-Aug-17	1-Aug-17
Extraction Date	15-Aug-17	15-Aug-17	15-Aug-17	15-Aug-17
Target Analytes	**pg**	**pg**	**pg**	**pg**
PCB-001	28600000	28600000	19100000	<630
PCB-002	1140000	929000	596000	171
PCB-003	4790000	3350000	2380000	<250
PCB-004	19200000	28300000	<19000000	1310
PCB-010	838000	1060000	1160000	54.2
PCB-009	2590000	3050000	2560000	<120
PCB-007	1030000	<120	<1000000	133
PCB-006	4980000	6000000	5230000	318
PCB-005	408000	<130	<360000	<36
PCB-008	<48000000	<42000000	32600000	1330
PCB-014	<1500	2390	2050	<26
PCB-011	<280	83100	<320	703
PCB-012/013	697000	1040000	664000	121
PCB-015	4440000	4900000	3500000	221
PCB-019	3520000	4090000	3920000	157
PCB-018/030	16100000	20100000	19200000	774
PCB-017	<210	10200000	8860000	298
PCB-027	822000	<110	1100000	<25
PCB-024	<140	384000	265000	<19
PCB-016	6680000	8290000	7690000	<220
PCB-032	3730000	4480000	3890000	<130
PCB-034	56400	57900	49700	<22
PCB-023	21000	27600	24200	<20
PCB-026/029	2490000	2970000	2560000	167
PCB-025	864000	1010000	842000	<33
PCB-031	9120000	10400000	9090000	488
PCB-020/028	9050000	11700000	9740000	592
PCB-021/033	5940000	7010000	5700000	348
PCB-022	3430000	4050000	3120000	189
PCB-036	6860	7850	6350	<20
PCB-039	30800	35900	30000	<23
PCB-038	3350	<3100	2680	<21
PCB-035	88700	95900	65400	<23
PCB-037	1160000	1400000	1040000	<140
PCB-054	54500	63100	45600	<12
PCB-050/053	1460000	1620000	1200000	82.5
PCB-045/051	2090000	2150000	1610000	<91
PCB-046	634000	723000	507000	<28
PCB-052	<48	<94	4390000	441
PCB-073	<30	205000	<57	<11
PCB-043	<52	<110	<100	<20
PCB-049/069	3030000	3360000	2210000	159
PCB-048	<42	<91	1180000	<78
PCB-044/047/065	<41	<83	3270000	327
PCB-059/062/075	508000	571000	355000	33.5
PCB-042	<42	<91	924000	68.9
PCB-040/041/071	2850000	3150000	1960000	172
PCB-064	1710000	<63	<59	<110
PCB-072	14000	17700	10800	<19
PCB-068	5700	<6200	3790	<15
PCB-057	19700	21200	13500	<19
PCB-058	<110	49100	<160	<20
PCB-067	85100	103000	71400	27.9
PCB-063	87200	97500	68100	<18
PCB-061/070/074/076	3040000	3430000	2440000	521
PCB-066	1200000	1390000	1120000	191
PCB-055	45100	37700	31700	38.1
PCB-056	732000	614000	528000	105
PCB-060	483000	392000	340000	<48
PCB-080	<92	<25	<150	<17
PCB-079	8040	<11000	6020	<17
PCB-078	<99	<27	<160	<18
PCB-081	6220	4720	4090	<19
PCB-077	123000	117000	81700	58.1
PCB-104	<410	<820	<420	<19
PCB-096	36000	31500	21800	<20
PCB-103	9350	10900	6380	<27
PCB-094	13900	13300	8450	<30
PCB-095	940000	1410000	750000	263
PCB-093/098/100/102	79900	82000	51800	<28

© Mostardi Platt

ALS Life sciences

Sample Analysis summary Report

Sample Name	TEST #1	TEST #2	TEST #4	BLANK
ALS Sample ID	L1972055-1	L1972055-2	L1972055-3	L1972055-4
Sample Size	1	1	1	1
Sample size units	sample	sample	sample	sample
Percent Moisture	n/a	n/a	n/a	n/a
Sample Matrix	Stack	Stack	Stack	Stack
Sampling Date	26-Jul-17	27-Jul-17	1-Aug-17	1-Aug-17
Extraction Date	15-Aug-17	15-Aug-17	15-Aug-17	15-Aug-17
Target Analytes	**pg**	**pg**	**pg**	**pg**
PCB-086/091	183000	229000	138000	<74
PCB-084	259000	423000	233000	<53
PCB-089	25200	20400	15400	<32
PCB-121	<270	<34	<85	<19
PCB-092	121000	242000	111000	63.1
PCB-090/101/113	618000	1410000	641000	499
PCB-083/099	399000	700000	363000	209
PCB-112	<85	<42	<100	<21
PCB-086/087/097/109/119/125	388000	917000	466000	290
PCB-085/110/115/116/117	719000	1760000	805000	495
PCB-082	126000	191000	106000	<35
PCB-111	<79	<36	<90	<19
PCB-120	856	<36	<89	<20
PCB-108/124	22500	62000	24100	<25
PCB-107	41200	92900	38700	<26
PCB-123	11000	22800	11400	<23
PCB-106	<110	<170	<130	<25
PCB-118	420000	1230000	527000	225
PCB-122	8050	17900	9470	<26
PCB-114	18500	33400	15700	<22
PCB-105	239000	581000	235000	98.3
PCB-127	<130	2470	893	<23
PCB-126	1930	5400	2160	<24
PCB-155	<52	<84	<78	<19
PCB-152	<310	<710	<350	<23
PCB-150	<62	<550	<190	<24
PCB-136	31100	83300	28400	<25
PCB-145	<170	<340	<70	<24
PCB-148	<130	471	<87	<31
PCB-135/151	65300	202000	63200	<41
PCB-154	<58	<78	<73	<23
PCB-144	18900	59400	14900	<33
PCB-147/149	150000	748000	228000	<140
PCB-134/143	13400	72600	19800	<46
PCB-139/140	4640	29800	8590	<40
PCB-131	4300	22600	6440	<44
PCB-142	<170	<290	<2400	<44
PCB-132	72300	416000	119000	<55
PCB-133	2480	14900	4240	<42
PCB-165	<130	<310	<1900	<34
PCB-146	24600	149000	42500	<40
PCB-161	<110	<220	<1800	<29
PCB-153/168	147000	880000	256000	<120
PCB-141	37500	235000	67300	<44
PCB-130	13600	106000	27900	<48
PCB-137/164	27400	189000	52600	<37
PCB-129/138/163	264000	1590000	457000	190
PCB-160	<86	<170	<1400	<22
PCB-158	20700	171000	47100	<29
PCB-128/166	32000	258000	73400	<36
PCB-159	<660	<2600	<1800	<30
PCB-162	819	5270	<1800	<30
PCB-167	9400	65200	20500	<30
PCB-156/157	29800	233000	64700	<41
PCB-169	35.7	114	47.2	<31
PCB-188	<64	<64	<63	<23
PCB-179	11100	25200	9790	<25
PCB-184	<48	<57	<56	<22
PCB-176	3290	9670	3340	<24
PCB-186	<56	<63	<66	<25
PCB-178	4830	11200	4870	<34
PCB-175	1290	<3700	1480	<33
PCB-187	26800	63300	28300	<28
PCB-182	<70	<780	<83	<31
PCB-183	15400	45600	17600	<32
PCB-185	<1700	<3200	1480	<30
PCB-174	29000	83000	29300	<36
PCB-177	14400	48300	16800	<34
PCB-181	<230	2790	743	<32
PCB-171/173	8290	37600	11900	<36
PCB-172	4610	16500	6080	<34

© Mostardi Platt

ALS Life sciences

Sample Analysis summary Report

Sample Name	TEST #1	TEST #2	TEST #4	BLANK
ALS Sample ID	L1972055-1	L1972055-2	L1972055-3	L1972055-4
Sample Size	1	1	1	1
Sample size units	sample	sample	sample	sample
Percent Moisture	n/a	n/a	n/a	n/a
Sample Matrix	Stack	Stack	Stack	Stack
Sampling Date	26-Jul-17	27-Jul-17	1-Aug-17	1-Aug-17
Extraction Date	15-Aug-17	15-Aug-17	15-Aug-17	15-Aug-17
Target Analytes	**pg**	**pg**	**pg**	**pg**
PCB-192	<62	<73	<76	<28
PCB-180/193	57800	178000	71400	<29
PCB-191	1090	<3700	<1400	<24
PCB-170	22900	114000	38900	<35
PCB-190	5040	16900	6490	<23
PCB-189	876	4990	<1400	<26
PCB-202	4820	3870	2570	<14
PCB-201	2080	<2100	1510	<15
PCB-204	<25	<26	<36	<14
PCB-197	<430	725	<360	<14
PCB-200	1710	2440	1410	<14
PCB-198/199	18900	20700	13800	<20
PCB-196	7330	9390	5830	<22
PCB-203	9940	13100	9320	<18
PCB-195	4400	7110	3880	<22
PCB-194	15000	18900	10600	<21
PCB-205	<450	951	519	<19
PCB-208	5020	3580	1820	<26
PCB-207	1260	1920	<690	<25
PCB-206	13000	10200	5740	<46
PCB-209	4020	22400	3480	<13
Extraction Standards	**% Rec**	**% Rec**	**% Rec**	**% Rec**
13C12-PCB-001	52	45	70	84
13C12-PCB-003	41	52	73	92
13C12-PCB-004	138	94	108	75
13C12-PCB-015	123	154	116	81
13C12-PCB-019	126	141	100	80
13C12-PCB-037	96	143	104	77
13C12-PCB-054	56	76	66	70
13C12-PCB-081	84	112	97	83
13C12-PCB-077	74	103	97	80
13C12-PCB-104	79	92	78	75
13C12-PCB-123	84	142	114	81
13C12-PCB-118	77	145	109	81
13C12-PCB-114	83	132	123	78
13C12-PCB-105	67	119	110	82
13C12-PCB-126	77	127	110	77
13C12-PCB-155	84	91	83	87
13C12-PCB-167	79	109	83	73
13C12-PCB-156/157	80	96	81	71
13C12-PCB-169	83	102	88	72
13C12-PCB-188	62	100	82	79
13C12-PCB-189	86	100	80	66
13C12-PCB-202	66	93	73	72
13C12-PCB-205	85	110	88	79
13C12-PCB-208	65	101	86	76
13C12-PCB-206	92	100	93	70
13C12-PCB-209	115	129	112	83
Field Spike Standards				
13C12-PCB-031	157	190	144	125
13C12-PCB-095	111	94	94	113
13C12-PCB-153	109	122	125	117

© Mostardi Platt

ALS Life sciences

Sample Analysis summary Report

Sample Name	TEST #1	TEST #2	TEST #4	BLANK
ALS Sample ID	L1972055-1	L1972055-2	L1972055-3	L1972055-4
Sample Size	1	1	1	1
Sample size units	sample	sample	sample	sample
Percent Moisture	n/a	n/a	n/a	n/a
Sample Matrix	Stack	Stack	Stack	Stack
Sampling Date	26-Jul-17	27-Jul-17	1-Aug-17	1-Aug-17
Extraction Date	15-Aug-17	15-Aug-17	15-Aug-17	15-Aug-17
Target Analytes	**pg**	**pg**	**pg**	**pg**
Homologue Group Totals	**pg**	**pg**	**pg**	**pg**
Total MonoCB	34500000	32900000	22100000	1050
Total DiCB	82200000	86400000	66100000	4350
Total TriCB	63100000	86300000	77200000	3560
Total TetraCB	18200000	18100000	22400000	2580
Total PentaCB	4680000	9490000	4580000	2270
Total HexaCB	971000	5540000	1600000	505
Total HeptaCB	209000	668000	251000	<22
Total OctaCB	65100	79300	49800	<14
Total NonaCB	19300	15700	8250	<25
DecaCB	4020	22400	3480	<13
Total PCB	204000000	240000000	194000000	14300
Best Aroclor Pattern Match	Aroclor 1232	Aroclor 1232	Aroclor 1232	
Toxic Equivalency - (WHO 2005)				
Lower Bound PCB TEQ	230	622	253	0.0155
Mid Point PCB TEQ	230	622	253	1.69
Upper Bound PCB TEQ	230	622	253	3.36

© Mostardi Platt

ALS Life sciences

Quality Control Summary Report

Sample Name	Method Blank	Method Blank
ALS Sample ID	WG2590247-1	WG2590247-4
Sample Size	1	1
Sample size units	blank	blank
Percent Moisture	n/a	n/a
Sample Matrix	Reagent	XAD
Sampling Date	n/a	n/a
Extraction Date	15-Aug-17	15-Aug-17
Target Analytes	**pg**	**pg**
PCB-001	<64	<570
PCB-002	<46	273
PCB-003	<48	494
PCB-004	<54	709
PCB-010	<33	<28
PCB-009	<34	78.9
PCB-007	<33	<48
PCB-006	<32	<140
PCB-005	<35	<30
PCB-008	123	766
PCB-014	<43	<27
PCB-011	<55	<230
PCB-012/013	<47	158
PCB-015	<49	221
PCB-019	<32	66.9
PCB-018/030	<28	<290
PCB-017	<35	<120
PCB-027	<23	34.7
PCB-024	<24	<18
PCB-016	<39	120
PCB-032	<21	<55
PCB-034	<25	<30
PCB-023	<24	<28
PCB-026/029	<29	82.3
PCB-025	<22	<25
PCB-031	52.5	188
PCB-020/028	<35	228
PCB-021/033	<23	134
PCB-022	<25	<41
PCB-036	<23	<27
PCB-039	<27	<32
PCB-038	<25	<29
PCB-035	<28	<33
PCB-037	<48	<160
PCB-054	<25	<23
PCB-050/053	<36	<53
PCB-045/051	<38	<56
PCB-046	<45	<67
PCB-052	<39	<71
PCB-073	<26	<38
PCB-043	<45	<68
PCB-049/069	<31	<48
PCB-048	<38	<56
PCB-044/047/065	<35	<93
PCB-059/062/075	<29	<43
PCB-042	<38	<56
PCB-040/041/071	<39	<58
PCB-064	<26	<39
PCB-072	<34	<28
PCB-068	<29	<23
PCB-057	<34	<28
PCB-058	<35	<29
PCB-067	<30	<33
PCB-063	<32	<26
PCB-061/070/074/076	<34	339
PCB-066	<33	<180
PCB-055	<36	<29
PCB-056	<34	<65
PCB-060	<34	<54
PCB-080	<33	40.5
PCB-079	<32	<26
PCB-078	<35	<29
PCB-081	<35	<27
PCB-077	<35	<150
PCB-104	<42	<38
PCB-096	<41	<37
PCB-103	<65	<53
PCB-094	<74	<60
PCB-095	<82	<66
PCB-093/098/100/102	<67	<54

© Mostardi Platt

ALS Life sciences

Quality Control Summary Report

Sample Name	Method Blank	Method Blank
ALS Sample ID	WG2590247-1	WG2590247-4
Sample Size	1	1
Sample size units	blank	blank
Percent Moisture	n/a	n/a
Sample Matrix	Reagent	XAD
Sampling Date	n/a	n/a
Extraction Date	15-Aug-17	15-Aug-17
Target Analytes	**pg**	**pg**
PCB-088/091	<71	<58
PCB-084	<87	<71
PCB-089	<77	<63
PCB-121	<50	<41
PCB-092	<74	<60
PCB-090/101/113	<65	<53
PCB-083/099	<71	<58
PCB-112	<61	<49
PCB-086/087/097/109/119/125	<63	<51
PCB-085/110/115/116/117	<59	<48
PCB-082	<94	<76
PCB-111	<53	<43
PCB-120	<52	<42
PCB-108/124	<64	<65
PCB-107	<60	<60
PCB-123	<64	<65
PCB-106	<68	<69
PCB-118	<150	<610
PCB-122	<72	<73
PCB-114	<67	<64
PCB-105	<65	327
PCB-127	<65	<66
PCB-126	<75	<70
PCB-155	<51	<44
PCB-152	<63	<48
PCB-150	<62	<48
PCB-136	<68	<52
PCB-145	<69	<53
PCB-148	<86	<66
PCB-135/151	<95	<73
PCB-154	<73	<56
PCB-144	<91	<70
PCB-147/149	<110	<83
PCB-134/143	<120	<90
PCB-139/140	<110	<83
PCB-131	<120	<93
PCB-142	<120	<90
PCB-132	<110	<88
PCB-133	<120	<89
PCB-165	<93	<71
PCB-146	<100	<78
PCB-161	<88	<67
PCB-153/168	<89	<68
PCB-141	<130	<96
PCB-130	<130	<100
PCB-137/164	<100	<79
PCB-129/138/163	<120	<91
PCB-160	<70	<54
PCB-158	<88	<67
PCB-128/166	<100	<76
PCB-159	<87	<66
PCB-162	<90	<69
PCB-167	<99	<72
PCB-156/157	<130	252
PCB-169	<91	<68
PCB-188	<60	<43
PCB-179	<63	<47
PCB-184	<55	<40
PCB-176	<60	<44
PCB-186	<64	<47
PCB-178	<85	<62
PCB-175	<82	<60
PCB-187	<71	<52
PCB-182	<81	<60
PCB-183	<81	<59
PCB-185	<89	<66
PCB-174	<87	<64
PCB-177	<89	<65
PCB-181	<82	<60
PCB-171/173	<94	<69
PCB-172	<88	<64

© Mostardi Platt

ALS Life sciences

Quality Control Summary Report

Sample Name	Method Blank	Method Blank
ALS Sample ID	WG2590247-1	WG2590247-4
Sample Size	1	1
Sample size units	blank	blank
Percent Moisture	n/a	n/a
Sample Matrix	Reagent	XAD
Sampling Date	n/a	n/a
Extraction Date	15-Aug-17	15-Aug-17
Target Analytes	**pg**	**pg**
PCB-192	<74	<54
PCB-180/193	<77	<56
PCB-191	<68	<50
PCB-170	<95	<70
PCB-190	<63	<46
PCB-189	<66	<57
PCB-202	<25	<28
PCB-201	<27	<29
PCB-204	<24	<25
PCB-197	<26	<27
PCB-200	<27	<29
PCB-198/199	<37	<39
PCB-196	<37	<40
PCB-203	<35	<38
PCB-195	<46	<41
PCB-194	<43	<39
PCB-205	<43	<36
PCB-208	<40	<39
PCB-207	<45	<41
PCB-206	<67	<55
PCB-209	<20	<16
Extraction Standards	**% Rec**	**% Rec**
13C12-PCB-001	51	92
13C12-PCB-003	54	100
13C12-PCB-004	59	79
13C12-PCB-015	60	83
13C12-PCB-019	64	90
13C12-PCB-037	67	79
13C12-PCB-054	59	65
13C12-PCB-081	70	76
13C12-PCB-077	69	74
13C12-PCB-104	70	88
13C12-PCB-123	82	85
13C12-PCB-118	88	80
13C12-PCB-114	76	80
13C12-PCB-105	77	82
13C12-PCB-126	73	73
13C12-PCB-155	95	83
13C12-PCB-167	69	73
13C12-PCB-156/157	64	70
13C12-PCB-169	73	77
13C12-PCB-188	75	77
13C12-PCB-189	64	68
13C12-PCB-202	73	68
13C12-PCB-205	83	80
13C12-PCB-208	89	78
13C12-PCB-206	86	82
13C12-PCB-209	94	92
Field Spike Standards		
13C12-PCB-031	NS	NS
13C12-PCB-095	NS	NS
13C12-PCB-153	NS	NS

© Mostardi Platt

ALS Life sciences

Quality Control Summary Report

Sample Name	Method Blank	Method Blank
ALS Sample ID	WG2590247-1	WG2590247-4
Sample Size	1	1
Sample size units	blank	blank
Percent Moisture	n/a	n/a
Sample Matrix	Reagent	XAD
Sampling Date	n/a	n/a
Extraction Date	15-Aug-17	15-Aug-17
Target Analytes	**pg**	**pg**
Homologue Group Totals		
Total MonoCB	64.0	1340
Total DiCB	227	2350
Total TriCB	136	1520
Total TetraCB	<25	1070
Total PentaCB	150	937
Total HexaCB	<51	252
Total HeptaCB	<55	<40
Total OctaCB	<24	<25
Total NonaCB	<40	<39
DecaCB	<20	<16
Total PCB	577	7470
Toxic Equivalency - (WHO 2005)		
Lower Bound PCB TEQ	0.00	0.0174
Mid Point PCB TEQ	5.13	4.58
Upper Bound PCB TEQ	10.3	9.11

© Mostardi Platt

ALS Life sciences

Sample Analysis summary Report

Sample Name	Laboratory Control Sample
ALS Sample ID	WG2590247-2
Sample Size	1
Sample size units	n/a
Percent Moisture	n/a
Sample Matrix	QC
Sampling Date	n/a
Extraction Date	15-Aug-17

Target Analytes	% Rec
PCB-001	127
PCB-003	106
PCB-004	114
PCB-015	93
PCB-019	108
PCB-037	89
PCB-054	109
PCB-081	98
PCB-077	99
PCB-104	103
PCB-123	87
PCB-118	95
PCB-114	89
PCB-105	86
PCB-126	89
PCB-155	99
PCB-167	105
PCB-156/157	101
PCB-169	101
PCB-188	105
PCB-189	100
PCB-202	112
PCB-205	98
PCB-208	123
PCB-206	124
PCB-209	116

Extraction Standards	% Rec
13C12-PCB-001	106
13C12-PCB-003	102
13C12-PCB-004	102
13C12-PCB-015	94
13C12-PCB-019	101
13C12-PCB-037	94
13C12-PCB-054	90
13C12-PCB-081	104
13C12-PCB-077	103
13C12-PCB-104	101
13C12-PCB-123	104
13C12-PCB-118	98
13C12-PCB-114	96
13C12-PCB-105	101
13C12-PCB-126	96
13C12-PCB-155	112
13C12-PCB-167	95
13C12-PCB-156/157	92
13C12-PCB-169	93
13C12-PCB-188	98
13C12-PCB-189	83
13C12-PCB-202	89
13C12-PCB-205	108
13C12-PCB-208	98
13C12-PCB-206	97
13C12-PCB-209	106

Field Spike Standards	
13C12-PCB-031	NS
13C12-PCB-095	NS
13C12-PCB-153	NS

© Mostardi Platt

ALS Life sciences

Sample Analysis Report

Sample Name	**TEST #1**	Sampling Date	26-Jul-17		Approved:
ALS Sample ID	L1972055-1	Extraction Date	15-Aug-17		*E. Sabljic*
Analysis Method	EPA 1668C	Sample Size	1	sample	--e-signature--
Analysis Type	Sample	Percent Moisture	n/a		30-Aug-2017
Sample Matrix	Stack	Split Ratio	8		

Run Information	**Run 1**	**Run 2**	**Run 3**
Filename	5-170828A05	5-170828B07	5-170824A03
Run Date	28-Aug-17 15:52	28-Aug-17 20:47	24-Aug-17 13:07
Final Volume	250 ul	250 uL	25 uL
Dilution Factor	1	10	1
Analysis Units	pg	pg	pg
Instrument - Column	HRMS5 SPBOCTYL60164-03B	HRMS5 SPBOCTYL60164-03B	HRMS5 SPBOCTYL60164-03B

Target Analytes	TEF (WHO 2005)	Run 1 Ret. Time	Run 1 Conc. pg	Run 1 EDL pg	Run 1 Flags	Run 1 EMPC pg	Run 1 LQL	Run 2 Ret. Time	Run 2 Conc. pg	Run 2 EDL pg	Run 2 Flags	Run 2 EMPC pg	Run 2 LQL	Run 3 Ret. Time	Run 3 Conc. pg	Run 3 EDL pg	Run 3 Flags	Run 3 EMPC pg	Run 3 LQL
PCB-001								8.91	28600000	25			20000						
PCB-002								10.31	1140000	25			20000						
PCB-003								10.44	4790000	26			20000						
PCB-004		10.74	19200000	170			2000												
PCB-010		10.85	838000	88			2000												
PCB-009		11.97	2590000	94			2000												
PCB-007		12.07	1030000	88			2000												
PCB-006		12.27	4980000	83			2000												
PCB-005		12.45	408000	96	M		2000												
PCB-008								12.40	<48000000	25	M,R	48000000	20000						
PCB-014		13.47	<1500	260	J,R	1500	2000												
PCB-011		NotFnd	<280	280	U		2000												
PCB-012/013		14.16	697000	280			2000												
PCB-015		14.37	4440000	210			2000												
PCB-019		12.73	3520000	130			2000												
PCB-018/030		13.80	16100000	170			2000												
PCB-017		NotFnd	<210	210	U		2000												
PCB-027		14.18	822000	140			2000												
PCB-024		NotFnd	<140	140	U		2000												
PCB-016		14.34	6680000	210	M		2000												
PCB-032		14.62	3730000	120			2000												
PCB-034		15.30	56400	290			2000												
PCB-023		15.38	21000	260			2000												
PCB-026/029		15.56	2490000	320			2000												
PCB-025		15.69	864000	230			2000												
PCB-031		15.87	9120000	260			2000												
PCB-020/028		16.04	9050000	280			2000												
PCB-021/033		16.19	5940000	250			2000												
PCB-022		16.42	3430000	250			2000												
PCB-036		17.18	6860	250			2000												
PCB-039		17.46	30800	290			2000												
PCB-038		17.77	3350	270			2000												
PCB-035		18.03	88700	300			2000												
PCB-037		18.28	1160000	210	M		2000												
PCB-054		14.55	54500	33			2000												
PCB-050/053		15.73	1460000	42			2000												
PCB-045/051		16.14	2090000	45			2000												
PCB-046		16.30	634000	49			2000												
PCB-052		NotFnd	<48	48	U		2000												
PCB-073		NotFnd	<30	30	U		2000												
PCB-043		NotFnd	<52	52	U		2000												
PCB-049/069		17.29	3030000	35			2000												
PCB-048		NotFnd	<42	42	U		2000												
PCB-044/047/065		NotFnd	<41	41	U		2000												
PCB-059/062/075		17.77	508000	33			2000												
PCB-042		NotFnd	<42	42	U		2000												
PCB-040/041/071		18.15	2850000	47			2000												
PCB-064		18.28	1710000	29			2000												
PCB-072		18.66	14000	100			2000												
PCB-068		18.82	5700	83			2000												
PCB-057		19.07	19700	100			2000												
PCB-058		NotFnd	<110	110	U		2000												
PCB-067		19.28	85100	88			2000												
PCB-063		19.43	87200	96			2000												
PCB-061/070/074/076		19.63	3040000	100			2000												
PCB-066		19.79	1200000	95			2000												
PCB-055		19.90	45100	100			2000												
PCB-056		20.18	732000	100			2000												
PCB-060		20.30	483000	100			2000												
PCB-080		NotFnd	<92	92	U		2000												
PCB-079		21.28	8040	93			2000												
PCB-078		NotFnd	<99	99	U		2000												
PCB-081	0.0003	21.85	6220	86			2000												
PCB-077	0.0001	22.16	123000	100			2000												
PCB-104		17.54	<410	38	J,R	410	2000												
PCB-096		17.80	36000	44			2000												
PCB-103		18.76	9350	110			2000												
PCB-094		18.91	13900	120			2000												
PCB-095		19.17	940000	140			2000												
PCB-093/098/100/102		19.33	79900	110			2000												

© Mostardi Platt

ALS Life sciences

Sample Analysis Report

Sample Name	**TEST #1**	Sampling Date	26-Jul-17		Approved:
ALS Sample ID	L1972055-1	Extraction Date	15-Aug-17		*E. Sabijic*
Analysis Method	EPA 1668C	Sample Size	1	sample	--e-signature--
Analysis Type	Sample	Percent Moisture	n/a		30-Aug-2017
Sample Matrix	Stack	Split Ratio	8		

Run Information	**Run 1**	**Run 2**	**Run 3**
Filename	5-170828A05	5-170828B07	5-170824A03
Run Date	28-Aug-17 15:52	28-Aug-17 20:47	24-Aug-17 13:07
Final Volume	250 ul	250 uL	25 uL
Dilution Factor	1	10	1
Analysis Units	pg	pg	pg
Instrument - Column	HRMS5 SPBOCTYL60164-03B	HRMS5 SPBOCTYL60164-03B	HRMS5 SPBOCTYL60164-03B

Target Analytes	TEF (WHO 2005)	Ret. Time	Conc. pg	EDL pg	Flags	EMPC pg	LQL	Ret. Time	Conc. pg	EDL pg	Flags	EMPC pg	LQL	Ret. Time	Conc. pg	EDL pg	Flags	EMPC pg	LQL
PCB-088/091		19.63	183000	120			2000												
PCB-084		19.77	259000	140			2000												
PCB-089		20.02	25200	130			2000												
PCB-121		20.12	<270	78	J,R	270	2000												
PCB-092		20.36	121000	120			2000												
PCB-090/101/113		20.67	618000	110			2000												
PCB-083/099		20.98	399000	120			2000												
PCB-112		NotFnd	<85	85	U		2000												
PCB-086/087/097/109/119/125		21.28	388000	100	M		2000												
PCB-085/110/115/116/117		21.75	719000	94	M		2000												
PCB-082		21.96	126000	140			2000												
PCB-111		NotFnd	<79	79	U		2000												
PCB-120		22.30	856	82	J		2000												
PCB-108/124		22.93	22500	100			2000												
PCB-107		23.06	41200	110	M		2000												
PCB-123	0.00003	23.11	11000	97	M		2000												
PCB-106		NotFnd	<110	110	U		2000												
PCB-118	0.00003	23.29	420000	97	M		2000												
PCB-122		23.51	8050	110			2000												
PCB-114	0.00003	23.61	18500	90			2000												
PCB-105	0.00003	23.95	239000	120			2000												
PCB-127		24.67	<130	97	J,R	130	2000												
PCB-126	0.1	25.56	1930	99	M,J		2000												
PCB-155		NotFnd	<52	52	U		2000												
PCB-152		20.70	<310	59	J,R	310	2000												
PCB-150		NotFnd	<62	62	U		2000												
PCB-136		21.01	31100	66			2000												
PCB-145		21.13	<170	61	J,R	170	2000												
PCB-148		21.83	<130	81	J,R	130	2000												
PCB-135/151		22.21	65300	110			2000												
PCB-154		NotFnd	<58	58	U		2000												
PCB-144								22.44	18900	12			20000						
PCB-147/149		22.69	150000	160			2000												
PCB-134/143		22.83	13400	180			2000												
PCB-139/140		22.98	4640	150			2000												
PCB-131		23.15	4300	170			2000												
PCB-142		NotFnd	<170	170	U		2000												
PCB-132		23.39	72300	170			2000												
PCB-133		23.57	2480	160			2000												
PCB-165		NotFnd	<130	130	U		2000												
PCB-146		23.90	24600	150			2000												
PCB-161		NotFnd	<110	110	U		2000												
PCB-153/168		24.21	147000	130			2000												
PCB-141		24.36	37500	170			2000												
PCB-130		24.58	13600	180			2000												
PCB-137/164		24.74	27400	140	M		2000												
PCB-129/138/163		24.90	264000	180			2000												
PCB-160		NotFnd	<86	86	U		2000												
PCB-158		25.12	20700	110			2000												
PCB-128/166		25.61	32000	140			2000												
PCB-159		26.04	<660	120	J,R	660	2000												
PCB-162		26.19	819	120	J		2000												
PCB-167	0.00003	26.43	9400	120			2000												
PCB-156/157	0.00003	27.06	29600	150			4000												
PCB-169	0.03													28.68	35.7	6.4	J		200
PCB-188		NotFnd	<64	64	U		2000												
PCB-179		23.75	11100	56			2000												
PCB-184		NotFnd	<48	48	U		2000												
PCB-176		24.20	3290	53			2000												
PCB-186		NotFnd	<56	56	U		2000												
PCB-178		25.10	4830	76			2000												
PCB-175		25.43	1290	73	J		2000												
PCB-187		25.56	26800	63			2000												
PCB-182		NotFnd	<70	70	U		2000												
PCB-183		25.87	15400	72			2000												
PCB-185		25.99	<1700	68	M,J,R	1700	2000												
PCB-174		26.05	29000	82	M		2000												
PCB-177		26.28	14400	77			2000												
PCB-181		26.47	<230	71	J,R	230	2000												
PCB-171/173		26.60	8290	82			2000												
PCB-172		27.39	4610	76			2000												

© Mostardi Platt

ALS Life sciences

Sample Analysis Report

Sample Name	**TEST #1**	Sampling Date	26-Jul-17		Approved:
ALS Sample ID	L1972055-1	Extraction Date	15-Aug-17		*E. Sabitic*
Analysis Method	EPA 1668C	Sample Size	1	sample	--e-signature--
Analysis Type	Sample	Percent Moisture	n/a		30-Aug-2017
Sample Matrix	Stack	Split Ratio	8		

Run Information	**Run 1**	**Run 2**	**Run 3**
Filename	5-170828A05	5-170828B07	5-170824A03
Run Date	28-Aug-17 15:52	28-Aug-17 20:47	24-Aug-17 13:07
Final Volume	250 ul	250 uL	25 uL
Dilution Factor	1	10	
Analysis Units	pg	pg	pg
Instrument - Column	HRMS5 SPBOCTYL60164-03B	HRMS5 SPBOCTYL60164-03B	HRMS5 SPBOCTYL60164-03B

Target Analytes	TEF (WHO 2005)	Ret. Time	Conc. pg	EDL pg	Flags	EMPC pg	LQL	Ret. Time	Conc. pg	EDL pg	Flags	EMPC pg	LQL	Ret. Time	Conc. pg	EDL pg	Flags	EMPC pg	LQL
PCB-192		NotFnd	<62	62	U		2000												
PCB-180/193		27.71	57800	65			2000												
PCB-191		27.91	1090	55	J		2000												
PCB-170		28.42	22900	79			2000												
PCB-190		28.68	5040	53			2000												
PCB-189	0.00003	30.00	876	64	M,J		2000												
PCB-202		26.30	4820	32			2000												
PCB-201		26.76	2080	27			2000												
PCB-204		NotFnd	<25	25	U		2000												
PCB-197		27.22	<430	26	J,R	430	2000												
PCB-200		27.34	1710	26	J		2000												
PCB-198/199		28.72	18900	37			2000												
PCB-196		29.04	7330	40			2000												
PCB-203		29.16	9940	33			2000												
PCB-195		29.88	4400	71			2000												
PCB-194		31.11	15000	67			2000												
PCB-205		31.38	<450	47	J,R	450	2000												
PCB-208		29.70	5020	51			2000												
PCB-207		30.18	1260	40	J		2000												
PCB-206		32.44	13000	57			2000												
PCB-209		33.55	4020	18			2000												

Extraction Standards	pg	Time	% Rec	Limits		Time	% Rec	Limits		Time	% Rec	Limits	
13C12-PCB-001	4000	9.03	52	5-145	M,R								
13C12-PCB-003	4000	10.56	41	5-145	M,R								
13C12-PCB-004	4000	10.71	138	5-145	M,R								
13C12-PCB-015	4000	14.36	123	5-145									
13C12-PCB-019	4000	12.71	126	5-145	R								
13C12-PCB-037	4000	18.26	96	5-145	R								
13C12-PCB-054	4000	14.54	56	5-145									
13C12-PCB-081	4000	21.83	84	10-145									
13C12-PCB-077	4000	22.14	74	10-145									
13C12-PCB-104	4000	17.54	79	10-145									
13C12-PCB-123	4000	23.11	84	10-145									
13C12-PCB-118	4000	23.28	77	10-145									
13C12-PCB-114	4000	23.59	83	10-145									
13C12-PCB-105	4000	23.95	67	10-145									
13C12-PCB-126	4000	25.55	77	10-145									
13C12-PCB-155	4000	20.49	84	10-145									
13C12-PCB-167	4000	26.42	79	10-145									
13C12-PCB-156/157	8000	27.07	80	10-145									
13C12-PCB-169	4000	28.72	83	10-145									
13C12-PCB-188	4000	23.51	62	10-145									
13C12-PCB-189	4000	29.98	86	10-145									
13C12-PCB-202	4000	26.28	66	10-145									
13C12-PCB-205	4000	31.37	85	10-145									
13C12-PCB-208	4000	29.69	65	10-145									
13C12-PCB-206	4000	32.43	92	10-145									
13C12-PCB-209	4000	33.54	115	10-145									
Field Spike Standards													
13C12-PCB-031	4000	15.87	157	70-130	R								
13C12-PCB-095	4000	19.15	111	70-130									
13C12-PCB-153	4000	24.20	109	70-130									

© Mostardi Platt

ALS Life sciences

Sample Analysis Report

Sample Name	**TEST #1**	Sampling Date	26-Jul-17		Approved:
ALS Sample ID	L1972055-1	Extraction Date	15-Aug-17		*E. Sabljic*
Analysis Method	EPA 1668C	Sample Size	1	sample	--e-signature--
Analysis Type	Sample	Percent Moisture	n/a		30-Aug-2017
Sample Matrix	Stack	Split Ratio	8		

Run Information	**Run 1**	**Run 2**	**Run 3**
Filename	5-170828A05	5-170828B07	5-170824A03
Run Date	28-Aug-17 15:52	28-Aug-17 20:47	24-Aug-17 13:07
Final Volume	250 ul	250 uL	25 uL
Dilution Factor	1	10	1
Analysis Units	pg	pg	pg
Instrument - Column	HRMS5 SPBOCTYL60164-03B	HRMS5 SPBOCTYL60164-03B	HRMS5 SPBOCTYL60164-03B

Target Analytes	TEF (WHO 2005)	Ret. Time	Conc. pg	EDL pg	Flags	EMPC pg	LQL	Ret. Time	Conc. pg	EDL pg	Flags	EMPC pg	LQL	Ret. Time	Conc. pg	EDL pg	Flags	EMPC pg	LQL
Homologue Group Totals																			
Total MonoCB			34500000	25	J		2000												
Total DiCB			82200000	25	J		2000												
Total TriCB			63100000	120	J		2000												
Total TetraCB			18200000	29	J		2000												
Total PentaCB			4680000	38	J		2000												
Total HexaCB			971000	6.4	J		200												
Total HeptaCB			209000	48	J		2000												
Total OctaCB			65100	25	J		2000												
Total NonaCB			19300	40	J		2000												
DecaCB			4020	18	J		2000												
Total PCB			204000000		J														
Toxic Equivalency - (WHO 2005)																			
Lower Bound PCB TEQ			230																
Mid Point PCB TEQ			230																
Upper Bound PCB TEQ			230																

EDL	Indicates the Estimated Detection Limit, based on the measured background noise for this target in this sample.
TEF	Indicates the Toxic Equivalency Factor TEQ Indicates the Toxic Equivalency
LQL	Lower Quantification Limit, based on the lowest calibration level corrected for sample size, splits and dilutions.
M	Indicates that a peak has been manually integrated.
U	Indicates that this compound was not detected above the EDL.
E	Indicates that this compound was detected above the calibrated range.
J	Indicates that the analyte was positively identifed. The associated numerical result is an estimate.
R	Indicates that the ion abundance ratio for this analyte did not meet the control limit. The reported value represents an estimated concentration.
EMPC	Estimated Maximum Possible Concentration – elevated detection limit due to interference or positive id criterion failure

© Mostardi Platt

ALS Life sciences

Sample Analysis Report

Sample Name	**TEST #2**	Sampling Date	27-Jul-17
ALS Sample ID	L1972055-2	Extraction Date	15-Aug-17
Analysis Method	EPA 1668C	Sample Size	1 sample
Analysis Type	Sample	Percent Moisture	n/a
Sample Matrix	Stack	Split Ratio	8

Approved:
E. Sabljic
--e-signature--
30-Aug-2017

Run Information	**Run 1**	**Run 2**	**Run 3**
Filename	5-170825D07	5-170828C08	5-170824A04
Run Date	26-Aug-17 18:36	29-Aug-17 12:06	24-Aug-17 13:47
Final Volume	250 ul	250 uL	25 uL
Dilution Factor	1	10	1
Analysis Units	pg	pg	pg
Instrument - Column	HRMS5 SPBOCTYL60164-03B	HRMS5 SPBOCTYL60164-03B	HRMS5 SPBOCTYL60164-03B

Target Analytes	TEF (WHO 2005)	Ret. Time	Conc. pg	EDL pg	Flags	EMPC pg	LQL	Ret. Time	Conc. pg	EDL pg	Flags	EMPC pg	LQL	Ret. Time	Conc. pg	EDL pg	Flags	EMPC pg	LQL
PCB-001								8.93	28600000	20			20000						
PCB-002								10.33	929000	23			20000						
PCB-003								10.46	3350000	21			20000						
PCB-004		10.75	28300000	370			2000												
PCB-010		10.85	1060000	120			2000												
PCB-009		11.99	3050000	120			2000												
PCB-007		NotFnd	<120	120	U		2000												
PCB-006		12.27	6000000	120			2000												
PCB-005		NotFnd	<130	130	U		2000												
PCB-008								12.43	<42000000	11	M,R	42000000	20000						
PCB-014		13.49	2390	360			2000												
PCB-011		14.01	83100	400	M		2000												
PCB-012/013		14.18	1040000	390			2000												
PCB-015		14.37	4900000	230			2000												
PCB-019		12.74	4090000	84			2000												
PCB-018/030		13.82	20100000	130			2000												
PCB-017		14.06	10200000	160			2000												
PCB-027		NotFnd	<110	110	U		2000												
PCB-024		14.29	384000	110	M		2000												
PCB-016		14.34	8290000	180	M		2000												
PCB-032		14.63	4480000	99			2000												
PCB-034		15.30	57900	120			2000												
PCB-023		15.40	27600	110			2000												
PCB-026/029		15.58	2970000	130			2000												
PCB-025		15.71	1010000	99			2000												
PCB-031		15.89	10400000	110			2000												
PCB-020/028		16.06	11700000	120			2000												
PCB-021/033		16.20	7010000	110			2000												
PCB-022		16.43	4050000	120			2000												
PCB-036		17.18	7850	110			2000												
PCB-039		17.47	35900	120			2000												
PCB-038		17.78	<3100	110	R	3100	2000												
PCB-035		18.05	95900	130	M		2000												
PCB-037		18.28	1400000	110	M		2000												
PCB-054		14.55	63100	62			2000												
PCB-050/053		15.74	1620000	86			2000												
PCB-045/051		16.14	2150000	90			2000												
PCB-046		16.32	723000	110			2000												
PCB-052		NotFnd	<94	94	U		2000												
PCB-073		17.18	205000	62			2000												
PCB-043		NotFnd	<110	110	U		2000												
PCB-049/069		17.31	3360000	73			2000												
PCB-048		NotFnd	<91	91	U		2000												
PCB-044/047/065		NotFnd	<83	83	U		2000												
PCB-059/062/075		17.78	571000	69			2000												
PCB-042		NotFnd	<91	91	U		2000												
PCB-040/041/071		18.16	3150000	94			2000												
PCB-064		NotFnd	<63	63	U		2000												
PCB-072		18.68	17700	26			2000												
PCB-068		18.82	<6200	22	R	6200	2000												
PCB-057		19.07	21200	26			2000												
PCB-058		19.18	49100	27			2000												
PCB-067		19.30	103000	23			2000												
PCB-063		19.45	97500	24			2000												
PCB-061/070/074/076		19.63	3430000	26			2000												
PCB-066		19.81	1390000	25			2000												
PCB-055		19.92	37700	27			2000												
PCB-056		20.18	614000	26			2000												
PCB-060		20.31	392000	26			2000												
PCB-080		NotFnd	<25	25	U		2000												
PCB-079		21.29	<11000	24	R	11000	2000												
PCB-078		NotFnd	<27	27	U		2000												
PCB-081	0.0003							21.80	4720	8.7			20000						
PCB-077	0.0001							22.11	117000	8.8			20000						
PCB-104		17.52	<820	62	J,R	820	2000												
PCB-096		17.82	31500	50			2000												
PCB-103		18.78	10900	44			2000												
PCB-094		18.92	13300	51			2000												
PCB-095		19.17	1410000	56			2000												
PCB-093/098/100/102		19.35	82000	46			2000												

© Mostardi Platt

ALS Life sciences

Sample Analysis Report

Sample Name	**TEST #2**	Sampling Date	27-Jul-17
ALS Sample ID	L1972055-2	Extraction Date	15-Aug-17
Analysis Method	EPA 1668C	Sample Size	1 sample
Analysis Type	Sample	Percent Moisture	n/a
Sample Matrix	Stack	Split Ratio	8

Approved:
E. Sabljic
--e-signature--
30-Aug-2017

Run Information	**Run 1**	**Run 2**	**Run 3**
Filename	5-170825D07	5-170828C08	5-170824A04
Run Date	26-Aug-17 18:36	29-Aug-17 12:06	24-Aug-17 13:47
Final Volume	250 ul	250 uL	25 uL
Dilution Factor	1	10	1
Analysis Units	pg	pg	pg
Instrument - Column	HRMS5 SPBOCTYL60164-03B	HRMS5 SPBOCTYL60164-03B	HRMS5 SPBOCTYL60164-03B

Target Analytes	TEF (WHO 2005)	Ret. Time	Conc. pg	EDL pg	Flags	EMPC pg	LQL	Ret. Time	Conc. pg	EDL pg	Flags	EMPC pg	LQL	Ret. Time	Conc. pg	EDL pg	Flags	EMPC pg	LQL
PCB-088/091		19.63	229000	49			2000												
PCB-084		19.79	423000	60			2000												
PCB-089		20.02	20400	53			2000												
PCB-121		NotFnd	<34	34	U		2000												
PCB-092		20.38	242000	50			2000												
PCB-090/101/113		20.69	1410000	45			2000												
PCB-083/099		20.98	700000	48			2000												
PCB-112		NotFnd	<42	42	U		2000												
PCB-086/087/097/109/119/125		21.34	917000	43	M		2000												
PCB-085/110/115/116/117		21.77	1760000	40	M		2000												
PCB-082		21.96	191000	64			2000												
PCB-111		NotFnd	<36	36	U		2000												
PCB-120		NotFnd	<36	36	U		2000												
PCB-108/124		22.95	62000	160			2000												
PCB-107		23.06	92900	150	M		2000												
PCB-123	0.00003	23.11	22800	160	M		2000												
PCB-106		NotFnd	<170	170	U		2000												
PCB-118	0.00003	23.31	1230000	130	M		2000												
PCB-122		23.51	17900	180			2000												
PCB-114	0.00003	23.61	33400	150			2000												
PCB-105	0.00003	23.97	581000	160			2000												
PCB-127		24.69	2470	160	M		2000												
PCB-126	0.1													25.48	5400	12			200
PCB-155		20.52	<84	84	U	55	2000												
PCB-152		20.70	<710	67	J,R	710	2000												
PCB-150		20.77	<550	67	J,R	550	2000												
PCB-136		21.01	83300	73			2000												
PCB-145		21.14	<340	74	J,R	340	2000												
PCB-148		21.86	471	92	J		2000												
PCB-135/151		22.22	202000	100			2000												
PCB-154		NotFnd	<78	78	U		2000												
PCB-144								22.45	59400	14			20000						
PCB-147/149		22.70	748000	270			2000												
PCB-134/143		22.83	72600	290			2000												
PCB-139/140		23.00	29800	270			2000												
PCB-131		23.15	22600	300			2000												
PCB-142		NotFnd	<290	290	U		2000												
PCB-132		23.39	416000	280			2000												
PCB-133		23.57	14900	290			2000												
PCB-165		23.77	<310	230	J,R	310	2000												
PCB-146		23.90	149000	250			2000												
PCB-161		NotFnd	<220	220	U		2000												
PCB-153/168		24.23	880000	220			2000												
PCB-141		24.36	235000	310			2000												
PCB-130		24.59	106000	330			2000												
PCB-137/164		24.76	189000	260	M		2000												
PCB-129/138/163		24.92	1590000	290			2000												
PCB-160		NotFnd	<170	170	U		2000												
PCB-158		25.12	171000	220			2000												
PCB-128/166		25.63	258000	250			2000												
PCB-159		26.05	<2600	210	R	2600	2000												
PCB-162		26.20	5270	220			2000												
PCB-167	0.00003	26.45	65200	190			2000												
PCB-156/157	0.00003	27.07	233000	280			4000												
PCB-169	0.03													28.68	114	8.0	M,J		200
PCB-188		NotFnd	<64	64	U		2000												
PCB-179		23.75	25200	62			2000												
PCB-184		23.97	<57	54	J,R	57	2000												
PCB-176		24.21	9670	59			2000												
PCB-186		24.44	<63	63	U	58	2000												
PCB-178		25.12	11200	83			2000												
PCB-175		25.45	<3700	81	R	3700	2000												
PCB-187		25.58	63300	70			2000												
PCB-182		25.68	<780	80	J,R	780	2000												
PCB-183		25.89	45600	80			2000												
PCB-185		25.99	<3200	88	M,R	3200	2000												
PCB-174		26.05	83000	85	M		2000												
PCB-177		26.28	48300	87			2000												
PCB-181		26.48	2790	81			2000												
PCB-171/173		26.61	37600	92			2000												
PCB-172		27.40	16500	86			2000												

© Mostardi Platt

ALS Life sciences

Sample Analysis Report

Sample Name	**TEST #2**	Sampling Date	27-Jul-17		
ALS Sample ID	L1972055-2	Extraction Date	15-Aug-17		
Analysis Method	EPA 1668C	Sample Size	1	sample	
Analysis Type	Sample	Percent Moisture	n/a		
Sample Matrix	Stack	Soxt Ratio	8		

Approved:
E. Sahyle
—e-signature—
30-Aug-2017

Run Information	**Run 1**	**Run 2**	**Run 3**
Filename	5-170825D07	5-170828C08	5-170824A04
Run Date	26-Aug-17 18:36	29-Aug-17 12:06	24-Aug-17 13:47
Final Volume	250 ul	250 uL	25 uL
Dilution Factor	1	10	1
Analysis Units	pg	pg	pg
Instrument - Column	HRMS5 SPBOCTYL60164-03B	HRMS5 SPBOCTYL60164-03B	HRMS5 SPBOCTYL60164-03B

Target Analytes	**TEF (WHO 2005)**	**Ret. Time**	**Conc. pg**	**EDL pg**	**Flags**	**EMPC pg**	**LQL**	**Ret. Time**	**Conc. pg**	**EDL pg**	**Flags**	**EMPC pg**	**LQL**	**Ret. Time**	**Conc. pg**	**EDL pg**	**Flags**	**EMPC pg**	**LQL**
PCB-192		NotFnd	<73	73	U		2000												
PCB-180/193		27.73	178000	75			2000												
PCB-191		27.93	<3700	67	R	3700	2000												
PCB-170		28.42	114000	93			2000												
PCB-190		28.70	16900	62			2000												
PCB-189	0.00003	30.01	4990	91			2000												
PCB-202		26.32	3870	30			2000												
PCB-201		26.78	<2100	30	R	2100	2000												
PCB-204		NotFnd	<26	26	U		2000												
PCB-197		27.24	725	29	J		2000												
PCB-200		27.34	2440	30			2000												
PCB-198/199		28.73	20700	41			2000												
PCB-196		29.06	9390	41			2000												
PCB-203		29.18	13100	39			2000												
PCB-195		29.90	7110	82			2000												
PCB-194		31.12	18900	78			2000												
PCB-205		31.40	951	70	J		2000												
PCB-208		29.72	3580	48			2000												
PCB-207		30.19	1920	53	J		2000												
PCB-206		32.48	10200	78			2000												
PCB-209		33.58	22400	25			2000												

Extraction Standards	**pg**	**Time**	**% Rec**	**Limits**		**Time**	**% Rec**	**Limits**	**Time**	**% Rec**	**Limits**
13C12-PCB-001	4000	9.05	45	5-145	M						
13C12-PCB-003	4000	10.57	52	5-145	M						
13C12-PCB-004	4000	10.74	94	5-145	R						
13C12-PCB-015	4000	14.37	154	5-145							
13C12-PCB-019	4000	12.71	141	5-145	R						
13C12-PCB-037	4000	18.26	143	5-145	R						
13C12-PCB-054	4000	14.55	76	5-145							
13C12-PCB-081	4000	21.83	112	10-145							
13C12-PCB-077	4000	22.14	103	10-145							
13C12-PCB-104	4000	17.55	92	10-145							
13C12-PCB-123	4000	23.13	142	10-145							
13C12-PCB-118	4000	23.29	145	10-145							
13C12-PCB-114	4000	23.59	132	10-145							
13C12-PCB-105	4000	23.95	119	10-145							
13C12-PCB-126	4000	25.56	127	10-145							
13C12-PCB-155	4000	20.51	91	10-145							
13C12-PCB-167	4000	26.43	109	10-145							
13C12-PCB-156/157	8000	27.07	96	10-145							
13C12-PCB-169	4000	28.72	102	10-145	R						
13C12-PCB-188	4000	23.52	100	10-145							
13C12-PCB-189	4000	30.00	100	10-145							
13C12-PCB-202	4000	26.30	93	10-145	R						
13C12-PCB-205	4000	31.38	110	10-145							
13C12-PCB-208	4000	29.72	101	10-145							
13C12-PCB-206	4000	32.44	100	10-145							
13C12-PCB-209	4000	33.57	129	10-145							
Field Spike Standards											
13C12-PCB-031	4000	15.89	190	70-130	R						
13C12-PCB-095	4000	19.15	94	70-130							
13C12-PCB-153	4000	24.21	122	70-130							

© Mostardi Platt

ALS Life sciences

Sample Analysis Report

Sample Name	**TEST #2**	**Sampling Date**	27-Jul-17		Approved:
ALS Sample ID	L1972055-2	Extraction Date	15-Aug-17		*E. Sabific*
Analysis Method	EPA 1668C	Sample Size	1	sample	--e-signature--
Analysis Type	Sample	Percent Moisture	n/a		30-Aug-2017
Sample Matrix	Stack	Split Ratio	8		

Run Information	**Run 1**	**Run 2**	**Run 3**
Filename	5-170825D07	5-170828C08	5-170824A04
Run Date	26-Aug-17 18:36	29-Aug-17 12:06	24-Aug-17 13:47
Final Volume	250 ul	250 uL	25 uL
Dilution Factor	1	10	1
Analysis Units	pg	pg	pg
Instrument - Column	HRMS5 SPBOCTYL60164-03B	HRMS5 SPBOCTYL60164-03B	HRMS5 SPBOCTYL60164-03B

Target Analytes	TEF (WHO 2005)	Ret. Time	Conc. pg	EDL pg	Flags	EMPC pg	LQL	Ret. Time	Conc. pg	EDL pg	Flags	EMPC pg	LQL	Ret. Time	Conc. pg	EDL pg	Flags	EMPC pg	LQL
Homologue Group Totals																			
Total MonoCB			32900000	20	J		2000												
Total DiCB			86400000	11	J		2000												
Total TriCB			86300000	84	J		2000												
Total TetraCB			18100000	8.7	J		2000												
Total PentaCB			9490000	12	J		200												
Total HexaCB			5540000	8.0	J		200												
Total HeptaCB			668000	54	J		2000												
Total OctaCB			79300	26	J		2000												
Total NonaCB			15700	46	J		2000												
DecaCB			22400	25	J		2000												
Total PCB			240000000		J														
Toxic Equivalency - (WHO 2005)																			
Lower Bound PCB TEQ			622																
Mid Point PCB TEQ			622																
Upper Bound PCB TEQ			622																

EDL	Indicates the Estimated Detection Limit, based on the measured background noise for this target in this sample.
TEF	Indicates the Toxic Equivalency Factor TEQ Indicates the Toxic Equivalency
LQL	Lower Quantification Limit, based on the lowest calibration level corrected for sample size, splits and dilutions.
M	Indicates that a peak has been manually integrated.
U	Indicates that this compound was not detected above the EDL.
E	Indicates that this compound was detected above the calibrated range.
J	Indicates that the analyte was positively identified. The associated numerical result is an estimate.
R	Indicates that the ion abundance ratio for this analyte did not meet the control limit. The reported value represents an estimated concentration.
EMPC	Estimated Maximum Possible Concentration - elevated detection limit due to interference or positive Id criterion failure

© Mostardi Platt

ALS Life sciences

Sample Analysis Report

Sample Name	**TEST #4**	Sampling Date	1-Aug-17		Approved:
ALS Sample ID	L1972055-3	Extraction Date	15-Aug-17		*E. Sabljic*
Analysis Method	EPA 1668C	Sample Size	1	sample	--e-signature--
Analysis Type	Sample	Percent Moisture	n/a		30-Aug-2017
Sample Matrix	Stack	Split Ratio	8		

Run Information	**Run 1**	**Run 2**	**Run 3**
Filename	5-170825D08	5-170828C09	5-170824A05
Run Date	26-Aug-17 19:15	29-Aug-17 12:46	24-Aug-17 14:26
Final Volume	250 ul	250 uL	25 uL
Dilution Factor	1	10	
Analysis Units	pg	pg	pg
Instrument - Column	HRMS5 SPBOCTYL60164-03B	HRMS5 SPBOCTYL60164-03B	HRMS5 SPBOCTYL60164-03B

Target Analytes	TEF (WHO 2005)	Ret. Time	Conc. pg	EDL pg	Flags	EMPC pg	LQL	Ret. Time	Conc. pg	EDL pg	Flags	EMPC pg	LQL	Ret. Time	Conc. pg	EDL pg	Flags	EMPC pg	LQL
PCB-001								8.91	19100000	19			20000						
PCB-002								10.31	596000	21			20000						
PCB-003								10.44	2380000	20			20000						
PCB-004		10.67	<19000000	340	,R	19000000	2000												
PCB-010		10.79	1160000	150			2000												
PCB-009		11.92	2560000	160			2000												
PCB-007		12.02	<1000000	150	R	1000000	2000												
PCB-006		12.20	5230000	150			2000												
PCB-005		12.40	<360000	160	M,R	360000	2000												
PCB-008								12.42	32600000	11	M		20000						
PCB-014		13.42	2050	290			2000												
PCB-011		NotFnd	<320	320	U		2000												
PCB-012/013		14.13	664000	310			2000												
PCB-015		14.34	3500000	230			2000												
PCB-019		12.68	3920000	91			2000												
PCB-018/030		13.77	19200000	90			2000												
PCB-017		14.01	8860000	110			2000												
PCB-027		14.14	1100000	73			2000												
PCB-024		14.23	265000	79	M		2000												
PCB-016		14.31	7690000	130	M		2000												
PCB-032		14.59	3890000	68			2000												
PCB-034		15.26	49700	280			2000												
PCB-023		15.36	24200	260			2000												
PCB-026/029		15.54	2560000	320			2000												
PCB-025		15.68	842000	240			2000												
PCB-031		15.86	9090000	260			2000												
PCB-020/028		16.02	9740000	280			2000												
PCB-021/033		16.17	5700000	260			2000												
PCB-022		16.40	3120000	280			2000												
PCB-036		17.16	6350	250			2000												
PCB-039		17.44	30000	300			2000												
PCB-038		17.75	2680	270			2000												
PCB-035		18.02	65400	310			2000												
PCB-037		18.26	1040000	300	M		2000												
PCB-054		14.52	45600	68			2000												
PCB-050/053		15.71	1200000	80			2000												
PCB-045/051		16.10	1610000	84			2000												
PCB-046		16.29	507000	100			2000												
PCB-052		17.01	4390000	88			2000												
PCB-073		NotFnd	<57	57	U		2000												
PCB-043		NotFnd	<100	100	U		2000												
PCB-049/069		17.27	2210000	68			2000												
PCB-048		17.44	1180000	85			2000												
PCB-044/047/065		17.57	3270000	77			2000												
PCB-059/062/075		17.75	355000	64			2000												
PCB-042		17.87	924000	84			2000												
PCB-040/041/071		18.13	1960000	87			2000												
PCB-064		NotFnd	<59	59	U		2000												
PCB-072		18.65	10800	150			2000												
PCB-068		18.81	3790	130			2000												
PCB-057		19.05	13500	150			2000												
PCB-058		NotFnd	<160	160	U		2000												
PCB-067		19.27	71400	130			2000												
PCB-063		19.41	68100	140			2000												
PCB-061/070/074/076		19.61	2440000	150			2000												
PCB-066		19.77	1120000	150			2000												
PCB-055		19.89	31700	160			2000												
PCB-056		20.16	528000	160			2000												
PCB-060		20.28	340000	160			2000												
PCB-080		NotFnd	<150	150	U		2000												
PCB-079		21.28	6020	140			2000												
PCB-078		NotFnd	<160	160	U		2000												
PCB-081	0.0003							21.80	4090	62			20000						
PCB-077	0.0001							22.11	81700	66			20000						
PCB-104		17.52	<420	65	J,R	420	2000												
PCB-096		17.78	21800	55			2000												
PCB-103		18.74	6380	110			2000												
PCB-094		18.89	8450	130			2000												
PCB-095		19.15	750000	140			2000												
PCB-093/098/100/102		19.31	51800	110			2000												

© Mostardi Platt

ALS Life sciences

Sample Analysis Report

Sample Name	**TEST #4**	Sampling Date	1-Aug-17
ALS Sample ID	L1972055-3	Extraction Date	15-Aug-17
Analysis Method	EPA 1668C	Sample Size	1 sample
Analysis Type	Sample	Percent Moisture	n/a
Sample Matrix	Stack	Split Ratio	8

Approved:
E. Sabijic
--e-signature--
30-Aug-2017

Run Information	**Run 1**	**Run 2**	**Run 3**
Filename	5-170825D08	5-170828C09	5-170824A05
Run Date	26-Aug-17 19:15	29-Aug-17 12:46	24-Aug-17 14:26
Final Volume	250 ul	250 uL	25 uL
Dilution Factor	1	10	1
Analysis Units	pg	pg	pg
Instrument - Column	HRMS5 SPBOCTYL60164-03B	HRMS5 SPBOCTYL60164-03B	HRMS5 SPBOCTYL60164-03B

Target Analytes	TEF (WHO 2005)	Ret. Time	Conc. pg	EDL pg	Flags	EMPC pg	LQL	Ret. Time	Conc. pg	EDL pg	Flags	EMPC pg	LQL	Ret. Time	Conc. pg	EDL pg	Flags	EMPC pg	LQL
PCB-088/091		19.61	138000	120			2000												
PCB-084		19.76	233000	150			2000												
PCB-089		20.00	15400	130			2000												
PCB-121		NotFnd	<85	85	U		2000												
PCB-092		20.34	111000	130			2000												
PCB-090/101/113		20.65	641000	110			2000												
PCB-083/099		20.97	363000	120			2000												
PCB-112		NotFnd	<100	100	U		2000												
PCB-086/087/097/109/119/125		21.32	466000	110	M		2000												
PCB-085/110/115/116/117		21.73	805000	100	M		2000												
PCB-082		21.95	106000	160			2000												
PCB-111		NotFnd	<90	90	U		2000												
PCB-120		NotFnd	<89	89	U		2000												
PCB-108/124		22.92	24100	120			2000												
PCB-107		23.05	38700	110	M		2000												
PCB-123	0.00003	23.10	11400	120	M		2000												
PCB-106		NotFnd	<130	130	U		2000												
PCB-118	0.00003	23.28	527000	110			2000												
PCB-122		23.49	9470	140			2000												
PCB-114	0.00003	23.59	15700	110			2000												
PCB-105	0.00003	23.94	235000	120			2000												
PCB-127		24.67	893	120	M,J		2000												
PCB-126	0.1													25.50	2160	36			200
PCB-155		NotFnd	<78	78	U		2000												
PCB-152		20.69	<350	64	J,R	350	2000												
PCB-150		20.75	<190	63	J,R	190	2000												
PCB-136		21.00	28400	69			2000												
PCB-145		NotFnd	<70	70	U		2000												
PCB-148		21.83	<87	87	U	86	2000												
PCB-135/151		22.19	63200	96			2000												
PCB-154		NotFnd	<73	73	U		2000												
PCB-144								22.45	14900	10			20000						
PCB-147/149		22.67	228000	2200			2000												
PCB-134/143		22.82	19800	2400			2000												
PCB-139/140		22.98	8590	2200			2000												
PCB-131		23.13	6440	2500			2000												
PCB-142		NotFnd	<2400	2400	U		2000												
PCB-132		23.38	119000	2400			2000												
PCB-133		23.56	4240	2400			2000												
PCB-165		NotFnd	<1900	1900	U		2000												
PCB-146		23.89	42500	2100			2000												
PCB-161		NotFnd	<1800	1800	U		2000												
PCB-153/168		24.20	256000	1800			2000												
PCB-141		24.35	67300	2600			2000												
PCB-130		24.56	27900	2800			2000												
PCB-137/164		24.72	52600	2100	M		2000												
PCB-129/138/163		24.89	457000	2400			2000												
PCB-160		NotFnd	<1400	1400	U		2000												
PCB-158		25.10	47100	1800			2000												
PCB-128/166		25.61	73400	2000			2000												
PCB-159		26.04	<1800	1800	U	850	2000												
PCB-162		26.19	<1800	1800	U		2000												
PCB-167	0.00003	26.43	20500	1700			2000												
PCB-156/157	0.00003	27.06	64700	2400			4000												
PCB-169	0.03													28.68	47.2	[illegible]	M,J		200
PCB-188		NotFnd	<63	63	U		2000												
PCB-179		23.74	9790	65			2000												
PCB-184		NotFnd	<56	56	U		2000												
PCB-176		24.18	3340	61			2000												
PCB-186		NotFnd	<66	66	U		2000												
PCB-178		25.09	4870	87			2000												
PCB-175		25.41	1480	84	J		2000												
PCB-187		25.56	28300	73			2000												
PCB-182		NotFnd	<83	83	U		2000												
PCB-183		25.87	17600	83			2000												
PCB-185		25.97	1480	91	M,J		2000												
PCB-174		26.04	29300	89	M		2000												
PCB-177		26.27	16800	91			2000												
PCB-181		26.47	743	84	J		2000												
PCB-171/173		26.60	11900	96			2000												
PCB-172		27.39	6080	90			2000												

© Mostardi Platt

ALS Life sciences

Sample Analysis Report

Sample Name	**TEST #4**	Sampling Date	1-Aug-17
ALS Sample ID	L1972055-3	Extraction Date	15-Aug-17
Analysis Method	EPA 1668C	Sample Size	1 sample
Analysis Type	Sample	Percent Moisture	n/a
Sample Matrix	Stack	Split Ratio	8

Approved:
E. Sabijic
--e-signature--
30-Aug-2017

Run Information	**Run 1**	**Run 2**	**Run 3**
Filename	5-170825D08	5-170828C09	5-170824A05
Run Date	26-Aug-17 19:15	29-Aug-17 12:46	24-Aug-17 14:26
Final Volume	250 ul	250 uL	25 uL
Dilution Factor	1	10	1
Analysis Units	pg	pg	pg
Instrument - Column	HRMS5 SPBOCTYL60164-03B	HRMS5 SPBOCTYL60164-03B	HRMS5 SPBOCTYL60164-03B

Target Analytes	TEF (WHO 2005)	Ret. Time	Conc. pg	EDL pg	Flags	EMPC pg	LQL	Ret. Time	Conc. pg	EDL pg	Flags	EMPC pg	LQL	Ret. Time	Conc. pg	EDL pg	Flags	EMPC pg	LQL
PCB-192		NotFnd	<76	76	U		2000												
PCB-180/193		27.71	71400	78			2000												
PCB-191		27.89	<1400	69	J,R	1400	2000												
PCB-170		28.40	38900	97			2000												
PCB-190		28.68	6490	64			2000												
PCB-189	0.00003	29.98	<1400	90	J,R	1400	2000												
PCB-202		26.28	2570	40			2000												
PCB-201		26.76	1510	41	J		2000												
PCB-204		NotFnd	<36	36	U		2000												
PCB-197		27.22	<360	39	J,R	360	2000												
PCB-200		27.32	1410	41	J		2000												
PCB-198/199		28.72	13800	55			2000												
PCB-196		29.06	5830	56			2000												
PCB-203		29.16	9320	53			2000												
PCB-195		29.88	3880	76			2000												
PCB-194		31.11	10600	72			2000												
PCB-205		31.38	519	65	J		2000												
PCB-208		29.70	1820	61	J		2000												
PCB-207		30.19	<690	65	J,R	690	2000												
PCB-206		32.44	5740	91			2000												
PCB-209		33.59	3480	31			2000												

Extraction Standards	pg	Time	% Rec	Limits		Time	% Rec	Limits		Time	% Rec	Limits	
13C12-PCB-001	4000	8.96	70	5-145	M,R								
13C12-PCB-003	4000	10.49	73	5-145	M,R								
13C12-PCB-004	4000	10.66	108	5-145	M,R								
13C12-PCB-015	4000	14.32	116	5-145									
13C12-PCB-019	4000	12.66	100	5-145	R								
13C12-PCB-037	4000	18.25	104	5-145	R								
13C12-PCB-054	4000	14.50	66	5-145									
13C12-PCB-081	4000	21.81	97	10-145									
13C12-PCB-077	4000	22.13	97	10-145									
13C12-PCB-104	4000	17.52	78	10-145	R								
13C12-PCB-123	4000	23.10	114	10-145	R								
13C12-PCB-118	4000	23.28	109	10-145									
13C12-PCB-114	4000	23.57	123	10-145									
13C12-PCB-105	4000	23.92	110	10-145									
13C12-PCB-126	4000	25.53	110	10-145									
13C12-PCB-155	4000	20.49	83	10-145									
13C12-PCB-167	4000	26.42	83	10-145									
13C12-PCB-156/157	8000	27.06	81	10-145									
13C12-PCB-169	4000	28.72	88	10-145									
13C12-PCB-188	4000	23.49	82	10-145									
13C12-PCB-189	4000	29.98	80	10-145									
13C12-PCB-202	4000	26.28	73	10-145									
13C12-PCB-205	4000	31.37	88	10-145									
13C12-PCB-208	4000	29.69	86	10-145									
13C12-PCB-206	4000	32.43	93	10-145									
13C12-PCB-209	4000	33.55	112	10-145									
Field Spike Standards													
13C12-PCB-031	4000	15.84	144	70-130	R								
13C12-PCB-095	4000	19.14	94	70-130									
13C12-PCB-153	4000	24.18	125	70-130	R								

© Mostardi Platt

ALS Life sciences

Sample Analysis Report

Sample Name	**TEST #4**	Sampling Date	1-Aug-17
ALS Sample ID	L1972055-3	Extraction Date	15-Aug-17
Analysis Method	EPA 1668C	Sample Size	1 sample
Analysis Type	Sample	Percent Moisture	n/a
Sample Matrix	Stack	Split Ratio	8

Approved:
E. Sabijic
--e-signature--
30-Aug-2017

Run Information	**Run 1**	**Run 2**	**Run 3**
Filename	5-170825D08	5-170828C09	5-170824A05
Run Date	26-Aug-17 19:15	29-Aug-17 12:46	24-Aug-17 14:26
Final Volume	250 ul	250 uL	25 uL
Dilution Factor	1	10	1
Analysis Units	pg	pg	pg
Instrument - Column	HRMS5 SPBOCTYL60164-03B	HRMS5 SPBOCTYL60164-03B	HRMS5 SPBOCTYL60164-03B

Target Analytes	TEF (WHO 2005)	Ret. Time	Conc. pg	EDL pg	Flags	EMPC pg	LQL	Ret. Time	Conc. pg	EDL pg	Flags	EMPC pg	LQL	Ret. Time	Conc. pg	EDL pg	Flags	EMPC pg	LQL
Homologue Group Totals																			
Total MonoCB			22100000	19	J		2000												
Total DiCB			66100000	11	J		2000												
Total TriCB			77200000	68	J		2000												
Total TetraCB			22400000	57	J		2000												
Total PentaCB			4580000	36	J		200												
Total HexaCB			1600000	10	J		200												
Total HeptaCB			251000	56	J		2000												
Total OctaCB			49800	36	J		2000												
Total NonaCB			8250	61	J		2000												
DecaCB			3480	31	J		2000												
Total PCB			194000000		J														
Toxic Equivalency - (WHO 2005)																			
Lower Bound PCB TEQ			253																
Mid Point PCB TEQ			253																
Upper Bound PCB TEQ			253																

EDL	Indicates the Estimated Detection Limit, based on the measured background noise for this target in this sample.
TEF	Indicates the Toxic Equivalency Factor TEQ Indicates the Toxic Equivalency
LQL	Lower Quantification Limit, based on the lowest calibration level corrected for sample size, splits and dilutions.
M	Indicates that a peak has been manually integrated.
U	Indicates that this compound was not detected above the EDL.
E	Indicates that this compound was detected above the calibrated range.
J	Indicates that the analyte was positively identifed. The associated numerical result is an estimate.
R	Indicates that the ion abundance ratio for this analyte did not meet the control limit. The reported value represents an estimated concentration.
EMPC	Estimated Maximum Possible Concentration - elevated detection limit due to interference or positive id criterion failure

© Mostardi Platt

ALS Life sciences

Sample Analysis Report

Sample Name	**BLANK**	Sampling Date	1-Aug-17
ALS Sample ID	L1972055-4	Extraction Date	15-Aug-17
Analysis Method	EPA 1668C	Sample Size	1 sample
Analysis Type	Sample	Percent Moisture	n/a
Sample Matrix	Stack	Split Ratio	

Approved:
E. Sabljic
--e-signature--
30-Aug-2017

Run Information	**Run 1**
Filename	5-170828AD4
Run Date	28-Aug-17 15:13
Final Volume	25 ul
Dilution Factor	10
Analysis Units	pg
Instrument - Column	HRMS5 SPBOCTYL60164-03B

Target Analytes	TEF (WHO 2005)	Ret. Time	Conc. pg	EDL pg	Flags	EMPC pg	LQL
PCB-001		8.91	<630	78	M,J,R	630	2000
PCB-002		10.31	171	72	J		2000
PCB-003		10.44	<250	71	J,R	250	2000
PCB-004		10.61	1310	50	J		2000
PCB-010		10.72	54.2	29	J		2000
PCB-009		11.87	<120	31	J,R	120	2000
PCB-007		11.97	133	29	J		2000
PCB-006		12.14	318	28	J		2000
PCB-005		12.35	<36	32	M,J,R	36	2000
PCB-008		12.40	1330	27	M,J		2000
PCB-014		NotFnd	<26	26	U		2000
PCB-011		13.90	703	28	J		2000
PCB-012/013		14.08	121	29	J		2000
PCB-015		14.27	221	25	J		2000
PCB-019		12.61	157	31	J		2000
PCB-018/030		13.72	774	23	J		2000
PCB-017		13.96	298	28	J		2000
PCB-027		14.08	<25	18	M,J,R	25	2000
PCB-024		NotFnd	<19	19	U		2000
PCB-016		14.26	<220	28	M,J,R	220	2000
PCB-032		14.54	<130	17	J,R	130	2000
PCB-034		NotFnd	<22	22	U		2000
PCB-023		NotFnd	<20	20	U		2000
PCB-026/029		15.49	167	25	J		2000
PCB-025		15.63	<33	18	J,R	33	2000
PCB-031		15.81	488	20	J,B		2000
PCB-020/028		15.97	592	22	J		2000
PCB-021/033		16.12	348	19	J		2000
PCB-022		16.35	189	20	J		2000
PCB-036		NotFnd	<20	20	U		2000
PCB-039		NotFnd	<23	23	U		2000
PCB-038		NotFnd	<21	21	U		2000
PCB-035		NotFnd	<23	23	U		2000
PCB-037		18.21	<140	23	J,R	140	2000
PCB-054		NotFnd	<12	12	U		2000
PCB-050/053		15.66	82.5	16	J		2000
PCB-045/051		16.07	<91	17	J,R	91	2000
PCB-046		16.25	<28	19	J,R	28	2000
PCB-052		16.96	441	18	J		2000
PCB-073		NotFnd	<11	11	U		2000
PCB-043		NotFnd	<20	20	U		2000
PCB-049/069		17.24	159	13	J		2000
PCB-048		17.39	<78	16	J,R	78	2000
PCB-044/047/065		17.54	327	16	J		2000
PCB-059/062/075		17.70	33.5	12	J		2000
PCB-042		17.83	68.9	16	J		2000
PCB-040/041/071		18.08	172	18	J		2000
PCB-064		18.21	<110	11	J,R	110	2000
PCB-072		NotFnd	<19	19	U		2000
PCB-068		NotFnd	<15	15	U		2000
PCB-057		NotFnd	<19	19	U		2000
PCB-058		NotFnd	<20	20	U		2000
PCB-067		19.22	27.9	16	M,J		2000
PCB-063		NotFnd	<18	18	U		2000
PCB-061/070/074/076		19.56	521	19	J		2000
PCB-066		19.74	191	18	J		2000
PCB-055		19.87	38.1	19	J		2000
PCB-056		20.13	105	19	J		2000
PCB-060		20.25	<48	19	J,R	48	2000
PCB-080		NotFnd	<17	17	U		2000
PCB-079		NotFnd	<17	17	U		2000
PCB-078		NotFnd	<18	18	U		2000
PCB-081	0.0003	NotFnd	<19	19	U		2000
PCB-077	0.0001	22.09	58.1	19	M,J		2000
PCB-104		NotFnd	<19	19	U		2000
PCB-096		NotFnd	<20	20	U		2000
PCB-103		NotFnd	<27	27	U		2000
PCB-094		NotFnd	<30	30	U		2000
PCB-095		19.12	263	34	J		2000
PCB-093/098/100/102		NotFnd	<28	28	U		2000

© Mostardi Platt

ALS Life sciences

Sample Analysis Report

Sample Name	**BLANK**	Sampling Date	1-Aug-17		Approved:
ALS Sample ID	L1972055-4	Extraction Date	15-Aug-17		*E. Sabljic*
Analysis Method	EPA 1668C	Sample Size	1	sample	--e-signature--
Analysis Type	Sample	Percent Moisture	n/a		30-Aug-2017
Sample Matrix	Stack	Split Ratio	8		

Run Information	**Run 1**
Filename	5-170828A04
Run Date	28-Aug-17 15:13
Final Volume	25 ul
Dilution Factor	10
Analysis Units	pg
Instrument - Column	HRMS5 SPBOCTYL60164-03B

Target Analytes	TEF (WHO 2005)	Ret. Time	Conc. pg	EDL pg	Flags	EMPC pg	LQL
PCB-088/091		19.56	<74	30	J,R	74	2000
PCB-084		19.74	<53	36	J,R	53	2000
PCB-089		NotFnd	<32	32	U		2000
PCB-121		NotFnd	<19	19	U		2000
PCB-092		20.31	63.1	30	J		2000
PCB-090/101/113		20.62	499	27	J		2000
PCB-083/099		20.92	209	30	J		2000
PCB-112		NotFnd	<21	21	U		2000
PCB-086/087/097/109/119/125		21.29	290	25	M,J		2000
PCB-085/110/115/116/117		21.70	495	23	M,J		2000
PCB-082		NotFnd	<35	35	U		2000
PCB-111		NotFnd	<19	19	U		2000
PCB-120		NotFnd	<20	20	U		2000
PCB-108/124		NotFnd	<25	25	U		2000
PCB-107		NotFnd	<26	26	U		2000
PCB-123	0.00003	NotFnd	<23	23	U		2000
PCB-106		NotFnd	<25	25	U		2000
PCB-118	0.00003	23.25	225	21	J		2000
PCB-122		NotFnd	<26	26	U		2000
PCB-114	0.00003	NotFnd	<22	22	U		2000
PCB-105	0.00003	23.90	98.3	21	J		2000
PCB-127		NotFnd	<23	23	U		2000
PCB-126	0.1	NotFnd	<24	24	U		2000
PCB-155		NotFnd	<19	19	U		2000
PCB-152		NotFnd	<23	23	U		2000
PCB-150		NotFnd	<24	24	U		2000
PCB-136		NotFnd	<25	25	U		2000
PCB-145		NotFnd	<24	24	U		2000
PCB-148		NotFnd	<31	31	U		2000
PCB-135/151		NotFnd	<41	41	U		2000
PCB-154		NotFnd	<23	23	U		2000
PCB-144		NotFnd	<33	33	U		2000
PCB-147/149		22.64	<140	42	J,R	140	2000
PCB-134/143		NotFnd	<46	46	U		2000
PCB-139/140		NotFnd	<40	40	U		2000
PCB-131		NotFnd	<44	44	U		2000
PCB-142		NotFnd	<44	44	U		2000
PCB-132		23.34	<55	43	J,R	55	2000
PCB-133		NotFnd	<42	42	U		2000
PCB-165		NotFnd	<34	34	U		2000
PCB-146		NotFnd	<40	40	U		2000
PCB-161		NotFnd	<29	29	U		2000
PCB-153/168		24.17	<120	33	J,R	120	2000
PCB-141		NotFnd	<44	44	U		2000
PCB-130		NotFnd	<48	48	U		2000
PCB-137/164		NotFnd	<37	37	U		2000
PCB-129/138/163		24.86	190	47	J		2000
PCB-160		NotFnd	<22	22	U		2000
PCB-158		NotFnd	<29	29	U		2000
PCB-128/166		NotFnd	<36	36	U		2000
PCB-159		NotFnd	<30	30	U		2000
PCB-162		NotFnd	<30	30	U		2000
PCB-167	0.00003	NotFnd	<30	30	U		2000
PCB-156/157	0.00003	NotFnd	<41	41	U		4000
PCB-169	0.03	NotFnd	<31	31	U		2000
PCB-188		NotFnd	<23	23	U		2000
PCB-179		NotFnd	<25	25	U		2000
PCB-184		NotFnd	<22	22	U		2000
PCB-176		NotFnd	<24	24	U		2000
PCB-186		NotFnd	<25	25	U		2000
PCB-178		NotFnd	<34	34	U		2000
PCB-175		NotFnd	<33	33	U		2000
PCB-187		NotFnd	<28	28	U		2000
PCB-182		NotFnd	<31	31	U		2000
PCB-183		NotFnd	<32	32	U		2000
PCB-185		NotFnd	<30	30	U		2000
PCB-174		NotFnd	<36	36	U		2000
PCB-177		NotFnd	<34	34	U		2000
PCB-181		NotFnd	<32	32	U		2000
PCB-171/173		NotFnd	<36	36	U		2000
PCB-172		NotFnd	<34	34	U		2000

© Mostardi Platt

ALS Life sciences

Sample Analysis Report

Sample Name	**BLANK**	**Sampling Date**	1-Aug-17
ALS Sample ID	L1972055-4	Extraction Date	15-Aug-17
Analysis Method	EPA 1668C	Sample Size	1 sample
Analysis Type	Sample	Percent Moisture	n/a
Sample Matrix	Stack	Split Ratio	8

Approved:
E. Sabijic
--e-signature--
30-Aug-2017

Run Information	**Run 1**
Filename	5-170828A04
Run Date	28-Aug-17 15:13
Final Volume	25 ul
Dilution Factor	10
Analysis Units	pg
Instrument - Column	HRMS5 SPBOCTYL60154-038

Target Analytes	TEF (WHO 2005)	Ret. Time	Conc. pg	EDL pg	Flags	EMPC pg	LQL
PCB-192		NotFnd	<28	28	U		2000
PCB-180/193		NotFnd	<29	29	U		2000
PCB-191		NotFnd	<24	24	U		2000
PCB-170		NotFnd	<35	35	U		2000
PCB-190		NotFnd	<23	23	U		2000
PCB-189	0.00003	NotFnd	<26	26	U		2000
PCB-202		NotFnd	<14	14	U		2000
PCB-201		26.70	<15	15	U	14	2000
PCB-204		NotFnd	<14	14	U		2000
PCB-197		NotFnd	<14	14	U		2000
PCB-200		NotFnd	<14	14	U		2000
PCB-198/199		NotFnd	<20	20	U		2000
PCB-196		NotFnd	<22	22	U		2000
PCB-203		NotFnd	<18	18	U		2000
PCB-195		NotFnd	<22	22	U		2000
PCB-194		NotFnd	<21	21	U		2000
PCB-205		NotFnd	<19	19	U		2000
PCB-208		NotFnd	<26	26	U		2000
PCB-207		NotFnd	<25	25	U		2000
PCB-206		NotFnd	<46	46	U		2000
PCB-209		NotFnd	<13	13	U		2000

Extraction Standards	pg	Time	% Rec	Limits	
13C12-PCB-001	4000	8.91	84	5-145	M
13C12-PCB-003	4000	10.43	92	5-145	
13C12-PCB-004	4000	10.61	75	5-145	
13C12-PCB-015	4000	14.27	81	5-145	
13C12-PCB-019	4000	12.60	80	5-145	
13C12-PCB-037	4000	18.20	77	5-145	
13C12-PCB-054	4000	14.45	70	5-145	
13C12-PCB-081	4000	21.77	83	10-145	
13C12-PCB-077	4000	22.08	80	10-145	
13C12-PCB-104	4000	17.49	75	10-145	
13C12-PCB-123	4000	23.05	81	10-145	
13C12-PCB-118	4000	23.23	81	10-145	
13C12-PCB-114	4000	23.52	78	10-145	
13C12-PCB-105	4000	23.89	82	10-145	
13C12-PCB-126	4000	25.48	77	10-145	
13C12-PCB-155	4000	20.44	87	10-145	
13C12-PCB-167	4000	26.37	73	10-145	
13C12-PCB-156/157	8000	27.01	71	10-145	
13C12-PCB-169	4000	28.67	72	10-145	
13C12-PCB-188	4000	23.44	79	10-145	
13C12-PCB-189	4000	29.93	66	10-145	
13C12-PCB-202	4000	26.24	72	10-145	
13C12-PCB-205	4000	31.32	79	10-145	
13C12-PCB-208	4000	29.66	76	10-145	
13C12-PCB-206	4000	32.38	70	10-145	
13C12-PCB-209	4000	33.49	83	10-145	

Field Spike Standards					
13C12-PCB-031	4000	15.79	125	70-130	R
13C12-PCB-095	4000	19.10	113	70-130	
13C12-PCB-153	4000	24.15	117	70-130	

© Mostardi Platt

ALS Life sciences

Sample Analysis Report

Sample Name	**BLANK**	Sampling Date	1-Aug-17		Approved:
ALS Sample ID	L1972055-4	Extraction Date	15-Aug-17		*E. Sabijic*
Analysis Method	EPA 1668C	Sample Size	1	sample	--e-signature--
Analysis Type	Sample	Percent Moisture	n/a		30-Aug-2017
Sample Matrix	Stack	Split Ratio	8		

Run Information	**Run 1**
Filename	5-170828A04
Run Date	28-Aug-17 15:13
Final Volume	25 ul
Dilution Factor	10
Analysis Units	pg
Instrument - Column	HRMS5 SPBOCTYL60164-03B

Target Analytes	**TEF (WHO 2005)**	**Ret. Time**	**Conc. pg**	**EDL pg**	**Flags**	**EMPC pg**	**LQL**
Homologue Group Totals							
Total MonoCB			1050	71	J		2000
Total DiCB			4350	25	J		2000
Total TriCB			3560	17	J		2000
Total TetraCB			2580	11	J		2000
Total PentaCB			2270	19	J		2000
Total HexaCB			505	19	J		2000
Total HeptaCB			<22	22	U		2000
Total OctaCB			<14	14	U		2000
Total NonaCB			<25	25	U		2000
DecaCB			<13	13	U		2000
Total PCB			14300		J		

Toxic Equivalency - (WHO 2005)	
Lower Bound PCB TEQ	0.0155
Mid Point PCB TEQ	1.69
Upper Bound PCB TEQ	3.36

EDL	Indicates the Estimated Detection Limit, based on the measured background noise for this target in this sample.
TEF	Indicates the Toxic Equivalency Factor TEQ Indicates the Toxic Equivalency
LQL	Lower Quantification Limit, based on the lowest calibration level corrected for sample size, splits and dilutions.
M	Indicates that a peak has been manually integrated.
U	Indicates that this compound was not detected above the EDL.
J	Indicates that the analyte was positively identifed. The associated numerical result is an estimate.
R	Indicates that the ion abundance ratio for this analyte did not meet the control limit. The reported value represents an estimated concentration.
B	Indicates that this target was detected in the blank at greater than 10% of the sample concentration.
EMPC	Estimated Maximum Possible Concentration – elevated detection limit due to interference or positive Id criterion failure

© Mostardi Platt

ALS Life sciences

Laboratory Method Blank Analysis Report

Sample Name	**Method Blank**	Sampling Date	n/a
ALS Sample ID	WG2590247-1	Extraction Date	15-Aug-17
Analysis Method	EPA 1668C	Sample Size	1 blank
Analysis Type	Blank	Percent Moisture	n/a
Sample Matrix	Reagent	Split Ratio	8

Approved:
E. Sabljic
--e-signature--
30-Aug-2017

Run Information	**Run 1**
Filename	5-170825004
Run Date	26-Aug-17 16:37
Final Volume	25 ul
Dilution Factor	2
Analysis Units	pg
Instrument - Column	HRMS5 SPBOCTYL60164-03B

Target Analytes	TEF (WHO 2005)	Ret. Time	Conc. pg	EDL pg	Flags	EMPC pg	LQL
PCB-001		8.90	<64	52	M,J,R	64	400
PCB-002		NotFnd	<46	46	U		400
PCB-003		NotFnd	<48	48	U		400
PCB-004		NotFnd	<54	54	U		400
PCB-010		NotFnd	<33	33	U		400
PCB-009		NotFnd	<34	34	U		400
PCB-007		NotFnd	<33	33	U		400
PCB-006		NotFnd	<32	32	U		400
PCB-005		NotFnd	<35	35	U		400
PCB-008		12.40	123	32	J		400
PCB-014		NotFnd	<43	43	U		400
PCB-011		13.88	<55	47	J,R	55	400
PCB-012/013		NotFnd	<47	47	U		400
PCB-015		14.26	<49	44	M,J,R	49	400
PCB-019		NotFnd	<32	32	U		400
PCB-018/030		NotFnd	<28	28	U		400
PCB-017		NotFnd	<35	35	U		400
PCB-027		NotFnd	<23	23	U		400
PCB-024		NotFnd	<24	24	U		400
PCB-016		NotFnd	<39	39	U		400
PCB-032		NotFnd	<21	21	U		400
PCB-034		NotFnd	<25	25	U		400
PCB-023		NotFnd	<24	24	U		400
PCB-026/029		NotFnd	<29	29	U		400
PCB-025		NotFnd	<22	22	U		400
PCB-031		15.81	52.5	23	J		400
PCB-020/028		15.97	<35	25	J,R	35	400
PCB-021/033		NotFnd	<23	23	U		400
PCB-022		NotFnd	<25	25	U		400
PCB-036		NotFnd	<23	23	U		400
PCB-039		NotFnd	<27	27	U		400
PCB-038		NotFnd	<25	25	U		400
PCB-035		NotFnd	<28	28	U		400
PCB-037		18.21	<48	32	J,R	48	400
PCB-054		NotFnd	<25	25	U		400
PCB-050/053		NotFnd	<36	36	U		400
PCB-045/051		NotFnd	<38	38	U		400
PCB-046		NotFnd	<45	45	U		400
PCB-052		NotFnd	<39	39	U		400
PCB-073		NotFnd	<26	26	U		400
PCB-043		NotFnd	<45	45	U		400
PCB-049/069		NotFnd	<31	31	U		400
PCB-048		NotFnd	<38	38	U		400
PCB-044/047/065		NotFnd	<35	35	U		400
PCB-059/062/075		NotFnd	<29	29	U		400
PCB-042		NotFnd	<38	38	U		400
PCB-040/041/071		NotFnd	<39	39	U		400
PCB-064		NotFnd	<26	26	U		400
PCB-072		NotFnd	<34	34	U		400
PCB-068		NotFnd	<29	29	U		400
PCB-057		NotFnd	<34	34	U		400
PCB-058		NotFnd	<35	35	U		400
PCB-067		NotFnd	<30	30	U		400
PCB-063		NotFnd	<32	32	U		400
PCB-061/070/074/076		NotFnd	<34	34	U		400
PCB-066		NotFnd	<33	33	U		400
PCB-055		NotFnd	<36	36	U		400
PCB-056		NotFnd	<34	34	U		400
PCB-060		NotFnd	<34	34	U		400
PCB-080		NotFnd	<33	33	U		400
PCB-079		NotFnd	<32	32	U		400
PCB-078		NotFnd	<35	35	U		400
PCB-081	0.0003	NotFnd	<35	35	U		400
PCB-077	0.0001	NotFnd	<35	35	U		400
PCB-104		NotFnd	<42	42	U		400
PCB-096		NotFnd	<41	41	U		400
PCB-103		NotFnd	<65	65	U		400
PCB-094		NotFnd	<74	74	U		400
PCB-095		NotFnd	<82	82	U		400
PCB-093/098/100/102		NotFnd	<67	67	U		400

© Mostardi Platt

ALS Life sciences

Laboratory Method Blank Analysis Report

Sample Name	**Method Blank**	Sampling Date	n/a		Approved:
ALS Sample ID	WG2590247-1	Extraction Date	15-Aug-17		*E. Sabljic*
Analysis Method	EPA 1668C	Sample Size	1	blank	--e-signature--
Analysis Type	Blank	Percent Moisture	n/a		30-Aug-2017
Sample Matrix	Reagent	Split Ratio	8		

Run Information	**Run 1**
Filename	5-170825D04
Run Date	26-Aug-17 16:37
Final Volume	25 ul
Dilution Factor	2
Analysis Units	pg
Instrument - Column	HRMS5 SPBOCTYL60164-03B

Target Analytes	TEF (WHO 2005)	Ret. Time	Conc. pg	EDL pg	Flags	EMPC pg	LQL
PCB-088/091		NotFnd	<71	71	U		400
PCB-084		NotFnd	<87	87	U		400
PCB-089		NotFnd	<77	77	U		400
PCB-121		NotFnd	<50	50	U		400
PCB-092		NotFnd	<74	74	U		400
PCB-090/101/113		NotFnd	<65	65	U		400
PCB-083/099		NotFnd	<71	71	U		400
PCB-112		NotFnd	<61	61	U		400
PCB-086/087/097/109/119/125		NotFnd	<63	63	U		400
PCB-085/110/115/116/117		NotFnd	<59	59	U		400
PCB-082		NotFnd	<94	94	U		400
PCB-111		NotFnd	<53	53	U		400
PCB-120		NotFnd	<52	52	U		400
PCB-108/124		NotFnd	<64	64	U		400
PCB-107		NotFnd	<60	60	U		400
PCB-123	0.00003	NotFnd	<64	64	U		400
PCB-106		NotFnd	<68	68	U		400
PCB-118	0.00003	23.25	<150	57	J,R	150	400
PCB-122		NotFnd	<72	72	U		400
PCB-114	0.00003	NotFnd	<67	67	U		400
PCB-105	0.00003	NotFnd	<65	65	U		400
PCB-127		NotFnd	<65	65	U		400
PCB-126	0.1	NotFnd	<75	75	U		400
PCB-155		NotFnd	<51	51	U		400
PCB-152		NotFnd	<63	63	U		400
PCB-150		NotFnd	<62	62	U		400
PCB-136		NotFnd	<68	68	U		400
PCB-145		NotFnd	<69	69	U		400
PCB-148		NotFnd	<86	86	U		400
PCB-135/151		NotFnd	<95	95	U		400
PCB-154		NotFnd	<73	73	U		400
PCB-144		NotFnd	<91	91	U		400
PCB-147/149		NotFnd	<110	110	U		400
PCB-134/143		NotFnd	<120	120	U		400
PCB-139/140		NotFnd	<110	110	U		400
PCB-131		NotFnd	<120	120	U		400
PCB-142		NotFnd	<120	120	U		400
PCB-132		NotFnd	<110	110	U		400
PCB-133		NotFnd	<120	120	U		400
PCB-165		NotFnd	<93	93	U		400
PCB-146		NotFnd	<100	100	U		400
PCB-161		NotFnd	<88	88	U		400
PCB-153/168		NotFnd	<89	89	U		400
PCB-141		NotFnd	<130	130	U		400
PCB-130		NotFnd	<130	130	U		400
PCB-137/164		NotFnd	<100	100	U		400
PCB-129/138/163		NotFnd	<120	120	U		400
PCB-160		NotFnd	<70	70	U		400
PCB-158		NotFnd	<88	88	U		400
PCB-128/166		NotFnd	<100	100	U		400
PCB-159		NotFnd	<87	87	U		400
PCB-162		NotFnd	<90	90	U		400
PCB-167	0.00003	NotFnd	<99	99	U		400
PCB-156/157	0.00003	NotFnd	<130	130	U		800
PCB-169	0.03	NotFnd	<91	91	U		400
PCB-188		NotFnd	<60	60	U		400
PCB-179		NotFnd	<63	63	U		400
PCB-184		NotFnd	<55	55	U		400
PCB-176		NotFnd	<60	60	U		400
PCB-186		NotFnd	<64	64	U		400
PCB-178		NotFnd	<85	85	U		400
PCB-175		NotFnd	<82	82	U		400
PCB-187		NotFnd	<71	71	U		400
PCB-182		NotFnd	<81	81	U		400
PCB-183		NotFnd	<81	81	U		400
PCB-185		NotFnd	<89	89	U		400
PCB-174		NotFnd	<87	87	U		400
PCB-177		NotFnd	<89	89	U		400
PCB-181		NotFnd	<82	82	U		400
PCB-171/173		NotFnd	<94	94	U		400
PCB-172		NotFnd	<88	88	U		400

© Mostardi Platt

ALS Life sciences

Laboratory Method Blank Analysis Report

Sample Name	**Method Blank**	Sampling Date	n/a	
ALS Sample ID	WG2590247-1	Extraction Date	15-Aug-17	
Analysis Method	EPA 1668C	Sample Size	1	blank
Analysis Type	Blank	Percent Moisture	n/a	
Sample Matrix	Reagent	Split Ratio	8	

Approved:
E. Sabio
e-signature
30-Aug-2017

Run Information	**Run 1**
Filename	5-170825D04
Run Date	26-Aug-17 16:37
Final Volume	25 ul
Dilution Factor	2
Analysis Units	pg
Instrument - Column	HRMS5 SPBOCTYL60164-03B

Target Analytes	**TEF (WHO 2005)**	**Ret. Time**	**Conc. pg**	**EDL pg**	**Flags**	**EMPC pg**	**LQL**
PCB-192		NotFnd	<74	74	U		400
PCB-180/193		NotFnd	<77	77	U		400
PCB-191		NotFnd	<68	68	U		400
PCB-170		NotFnd	<95	95	U		400
PCB-190		NotFnd	<63	63	U		400
PCB-189	0.00003	NotFnd	<66	66	U		400
PCB-202		NotFnd	<25	25	U		400
PCB-201		NotFnd	<27	27	U		400
PCB-204		NotFnd	<24	24	U		400
PCB-197		NotFnd	<26	26	U		400
PCB-200		NotFnd	<27	27	U		400
PCB-198/199		NotFnd	<37	37	U		400
PCB-196		NotFnd	<37	37	U		400
PCB-203		NotFnd	<35	35	U		400
PCB-195		NotFnd	<46	46	U		400
PCB-194		NotFnd	<43	43	U		400
PCB-205		NotFnd	<43	43	U		400
PCB-208		NotFnd	<40	40	U		400
PCB-207		NotFnd	<45	45	U		400
PCB-206		NotFnd	<67	67	U		400
PCB-209		NotFnd	<20	20	U		400

Extraction Standards	**pg**	**Time**	**% Rec**	**Limits**	
13C12-PCB-001	4000	8.88	51	5-145	M
13C12-PCB-003	4000	10.41	54	5-145	M,R
13C12-PCB-004	4000	10.59	59	5-145	
13C12-PCB-015	4000	14.26	60	5-145	
13C12-PCB-019	4000	12.58	64	5-145	
13C12-PCB-037	4000	18.20	67	5-145	R
13C12-PCB-054	4000	14.44	59	5-145	
13C12-PCB-081	4000	21.77	70	10-145	
13C12-PCB-077	4000	22.08	69	10-145	
13C12-PCB-104	4000	17.47	70	10-145	
13C12-PCB-123	4000	23.05	82	10-145	
13C12-PCB-118	4000	23.23	88	10-145	
13C12-PCB-114	4000	23.52	76	10-145	
13C12-PCB-105	4000	23.89	77	10-145	
13C12-PCB-126	4000	25.46	73	10-145	
13C12-PCB-155	4000	20.46	95	10-145	
13C12-PCB-167	4000	26.37	69	10-145	
13C12-PCB-156/157	8000	26.99	64	10-145	
13C12-PCB-169	4000	28.67	73	10-145	
13C12-PCB-188	4000	23.46	75	10-145	
13C12-PCB-189	4000	29.93	64	10-145	
13C12-PCB-202	4000	26.24	73	10-145	
13C12-PCB-205	4000	31.32	83	10-145	
13C12-PCB-208	4000	29.66	89	10-145	
13C12-PCB-206	4000	32.39	86	10-145	
13C12-PCB-209	4000	33.50	94	10-145	

Field Spike Standards		
13C12-PCB-031	0	NS
13C12-PCB-095	0	NS
13C12-PCB-153	0	NS

© Mostardi Platt

ALS Life sciences

Laboratory Method Blank Analysis Report

Sample Name	**Method Blank**	Sampling Date	n/a		Approved:
ALS Sample ID	WG2590247-1	Extraction Date	15-Aug-17		*E. Sabljic*
Analysis Method	EPA 1668C	Sample Size	1	blank	--e-signature--
Analysis Type	Blank	Percent Moisture	n/a		30-Aug-2017
Sample Matrix	Reagent	Split Ratio	8		

Run Information	**Run 1**
Filename	5-170825D04
Run Date	26-Aug-17 16:37
Final Volume	25 ul
Dilution Factor	2
Analysis Units	pg
Instrument - Column	HRMS5 SPBOCTYL60164-03B

Target Analytes	**TEF (WHO 2005)**	**Ret. Time**	**Conc. pg**	**EDL pg**	**Flags**	**EMPC pg**	**LQL**
Homologue Group Totals							
Total MonoCB			64.0	46	J		400
Total DiCB			227	32	J		400
Total TriCB			136	21	J		400
Total TetraCB			<25	25	U		400
Total PentaCB			150	41	J		400
Total HexaCB			<51	51	U		400
Total HeptaCB			<55	55	U		400
Total OctaCB			<24	24	U		400
Total NonaCB			<40	40	U		400
DecaCB			<20	20	U		400
Total PCB			577		J		
Toxic Equivalency - (WHO 2005)							
Lower Bound PCB TEQ			0.00				
Mid Point PCB TEQ			5.13				
Upper Bound PCB TEQ			10.3				

EDL	Indicates the Estimated Detection Limit, based on the measured background noise for this target in this sample.
TEF	Indicates the Toxic Equivalency Factor TEQ Indicates the Toxic Equivalency
LQL	Lower Quantification Limit, based on the lowest calibration level corrected for sample size, splits and dilutions.
M	Indicates that a peak has been manually integrated.
U	Indicates that this compound was not detected above the EDL.
NS	Indicates that this standard has not been added
J	Indicates that the analyte was positively identifed. The associated numerical result is an estimate.
R	Indicates that the ion abundance ratio for this analyte did not meet the control limit. The reported value represents an estimated concentration.
EMPC	Estimated Maximum Possible Concentration – elevated detection limit due to interference or positive id criterion failure

© Mostardi Platt

ALS Life sciences

Laboratory Method Blank Analysis Report

Sample Name	**Method Blank**	Sampling Date	n/a		Approved:
ALS Sample ID	WG2590247-4	Extraction Date	15-Aug-17		*E. Sabljic*
Analysis Method	EPA 1668C	Sample Size	1	blank	--e-signature--
Analysis Type	Blank	Percent Moisture	n/a		30-Aug-2017
Sample Matrix	XAD	Split Ratio	8		

Run Information	**Run 1**
Filename	5-170825D03
Run Date	26-Aug-17 15:58
Final Volume	25 ul
Dilution Factor	2
Analysis Units	pg
Instrument - Column	HRMS5 SPBOCTYL60164-03B

Target Analytes	TEF (WHO 2005)	Ret. Time	Conc. pg	EDL pg	Flags	EMPC pg	LQL
PCB-001		8.86	<570	54		570	400
PCB-002		10.31	273	45	J		400
PCB-003		10.44	494	46			400
PCB-004		10.61	709	48			400
PCB-010		NotFnd	<28	28	U		400
PCB-009		11.86	78.9	29	J		400
PCB-007		11.97	<48	28	J,R	48	400
PCB-006		12.12	<140	28	J,R	140	400
PCB-005		NotFnd	<30	30	U		400
PCB-008		12.40	766	28			400
PCB-014		NotFnd	<27	27	U		400
PCB-011		13.88	<230	30	J,R	230	400
PCB-012/013		14.09	158	30	J		400
PCB-015		14.27	221	27	J		400
PCB-019		12.61	66.9	34	J		400
PCB-018/030		13.70	<290	20	J,R	290	400
PCB-017		13.95	<120	25	M,J,R	120	400
PCB-027		14.08	34.7	17	M,J		400
PCB-024		NotFnd	<18	18	U		400
PCB-016		14.24	120	28	M,J		400
PCB-032		14.52	<55	15	M,J,R	55	400
PCB-034		NotFnd	<30	30	U		400
PCB-023		NotFnd	<28	28	U		400
PCB-026/029		15.49	82.3	34	J		400
PCB-025		15.63	<25	25	U	13	400
PCB-031		15.81	188	27	J		400
PCB-020/028		15.99	228	30	J		400
PCB-021/033		16.10	134	27	J		400
PCB-022		16.35	<41	29	J,R	41	400
PCB-036		NotFnd	<27	27	U		400
PCB-039		NotFnd	<32	32	U		400
PCB-038		NotFnd	<29	29	U		400
PCB-035		NotFnd	<33	33	U		400
PCB-037		18.21	<160	35	M,J,R	160	400
PCB-054		NotFnd	<23	23	U		400
PCB-050/053		NotFnd	<53	53	U		400
PCB-045/051		NotFnd	<56	56	U		400
PCB-046		NotFnd	<67	67	U		400
PCB-052		16.96	<71	58	J,R	71	400
PCB-073		NotFnd	<38	38	U		400
PCB-043		NotFnd	<68	68	U		400
PCB-049/069		17.26	<48	45	J,R	48	400
PCB-048		NotFnd	<56	56	U		400
PCB-044/047/065		17.52	<93	51	J,R	93	400
PCB-059/062/075		NotFnd	<43	43	U		400
PCB-042		NotFnd	<56	56	U		400
PCB-040/041/071		NotFnd	<58	58	U		400
PCB-064		18.23	<39	39	U	35	400
PCB-072		NotFnd	<28	28	U		400
PCB-068		NotFnd	<23	23	U		400
PCB-057		NotFnd	<28	28	U		400
PCB-058		NotFnd	<29	29	U		400
PCB-067		19.22	<33	24	J,R	33	400
PCB-063		NotFnd	<26	26	U		400
PCB-061/070/074/076		19.56	339	27	J		400
PCB-066		19.74	<180	27	J,R	180	400
PCB-055		NotFnd	<29	29	U		400
PCB-056		20.13	<65	28	J,R	65	400
PCB-060		20.23	<54	28	J,R	54	400
PCB-080		20.36	40.5	27	J		400
PCB-079		NotFnd	<26	26	U		400
PCB-078		NotFnd	<29	29	U		400
PCB-081	0.0003	NotFnd	<27	27	U		400
PCB-077	0.0001	22.09	<150	27	J,R	150	400
PCB-104		NotFnd	<38	38	U		400
PCB-096		NotFnd	<37	37	U		400
PCB-103		NotFnd	<53	53	U		400
PCB-094		NotFnd	<60	60	U		400
PCB-095		NotFnd	<66	66	U		400
PCB-093/098/100/102		NotFnd	<54	54	U		400

© Mostardi Platt

ALS Life sciences

Laboratory Method Blank Analysis Report

Sample Name	**Method Blank**	Sampling Date	n/a		Approved:
ALS Sample ID	WG2590247-4	Extraction Date	15-Aug-17		*E. Sabific*
Analysis Method	EPA 1668C	Sample Size	1	blank	--e-signature--
Analysis Type	Blank	Percent Moisture	n/a		30-Aug-2017
Sample Matrix	XAD	Split Ratio	8		

Run Information	**Run 1**
Filename	5-170825D03
Run Date	26-Aug-17 15:58
Final Volume	25 ul
Dilution Factor	2
Analysis Units	pg
Instrument - Column	HRMS5 SPBOCTYL60164-03B

Target Analytes	TEF (WHO 2005)	Ret. Time	Conc. pg	EDL pg	Flags	EMPC pg	LQL
PCB-088/091		NotFnd	<58	58	U		400
PCB-084		NotFnd	<71	71	U		400
PCB-089		NotFnd	<63	63	U		400
PCB-121		NotFnd	<41	41	U		400
PCB-092		NotFnd	<60	60	U		400
PCB-090/101/113		NotFnd	<53	53	U		400
PCB-083/099		NotFnd	<58	58	U		400
PCB-112		NotFnd	<49	49	U		400
PCB-086/087/097/109/119/125		NotFnd	<51	51	U		400
PCB-085/110/115/116/117		NotFnd	<48	48	U		400
PCB-082		NotFnd	<76	76	U		400
PCB-111		NotFnd	<43	43	U		400
PCB-120		NotFnd	<42	42	U		400
PCB-108/124		NotFnd	<65	65	U		400
PCB-107		23.02	<60	60	U		400
PCB-123	0.00003	NotFnd	<65	65	U		400
PCB-106		NotFnd	<69	69	U		400
PCB-118	0.00003	23.25	<610	61	R	610	400
PCB-122		NotFnd	<73	73	U		400
PCB-114	0.00003	NotFnd	<64	64	U		400
PCB-105	0.00003	23.90	327	62	J		400
PCB-127		NotFnd	<66	66	U		400
PCB-126	0.1	NotFnd	<70	70	U		400
PCB-155		NotFnd	<44	44	U		400
PCB-152		NotFnd	<48	48	U		400
PCB-150		NotFnd	<48	48	U		400
PCB-136		NotFnd	<52	52	U		400
PCB-145		NotFnd	<53	53	U		400
PCB-148		NotFnd	<66	66	U		400
PCB-135/151		NotFnd	<73	73	U		400
PCB-154		NotFnd	<56	56	U		400
PCB-144		NotFnd	<70	70	U		400
PCB-147/149		NotFnd	<83	83	U		400
PCB-134/143		NotFnd	<90	90	U		400
PCB-139/140		NotFnd	<83	83	U		400
PCB-131		NotFnd	<93	93	U		400
PCB-142		NotFnd	<90	90	U		400
PCB-132		NotFnd	<88	88	U		400
PCB-133		NotFnd	<89	89	U		400
PCB-165		NotFnd	<71	71	U		400
PCB-146		NotFnd	<78	78	U		400
PCB-161		NotFnd	<67	67	U		400
PCB-153/168		NotFnd	<68	68	U		400
PCB-141		NotFnd	<96	96	U		400
PCB-130		NotFnd	<100	100	U		400
PCB-137/164		NotFnd	<79	79	U		400
PCB-129/138/163		NotFnd	<91	91	U		400
PCB-160		NotFnd	<54	54	U		400
PCB-158		NotFnd	<67	67	U		400
PCB-128/166		NotFnd	<76	76	U		400
PCB-159		NotFnd	<66	66	U		400
PCB-162		NotFnd	<69	69	U		400
PCB-167	0.00003	NotFnd	<72	72	U		400
PCB-156/157	0.00003	27.01	252	96	J		800
PCB-169	0.03	NotFnd	<68	68	U		400
PCB-188		NotFnd	<43	43	U		400
PCB-179		NotFnd	<47	47	U		400
PCB-184		NotFnd	<40	40	U		400
PCB-176		NotFnd	<44	44	U		400
PCB-186		NotFnd	<47	47	U		400
PCB-178		NotFnd	<62	62	U		400
PCB-175		NotFnd	<60	60	U		400
PCB-187		NotFnd	<52	52	U		400
PCB-182		NotFnd	<60	60	U		400
PCB-183		NotFnd	<59	59	U		400
PCB-185		NotFnd	<66	66	U		400
PCB-174		NotFnd	<64	64	U		400
PCB-177		NotFnd	<65	65	U		400
PCB-181		NotFnd	<60	60	U		400
PCB-171/173		NotFnd	<69	69	U		400
PCB-172		NotFnd	<64	64	U		400

© Mostardi Platt

ALS Life sciences

Laboratory Method Blank Analysis Report

Sample Name	**Method Blank**	Sampling Date	n/a		Approved:
ALS Sample ID	WG2590247-4	Extraction Date	15-Aug-17		*E. Sabljic*
Analysis Method	EPA 1668C	Sample Size	1	blank	--e-signature--
Analysis Type	Blank	Percent Moisture	n/a		30-Aug-2017
Sample Matrix	XAD	Split Ratio	8		

Run Information	**Run 1**
Filename	5-170825D03
Run Date	26-Aug-17 15:58
Final Volume	25 ul
Dilution Factor	2
Analysis Units	pg
Instrument - Column	HRMS5 SPBOCTYL60164-038

Target Analytes	**TEF (WHO 2005)**	**Ret. Time**	**Conc. pg**	**EDL pg**	**Flags**	**EMPC pg**	**LQL**
PCB-192		NotFnd	<54	54	U		400
PCB-180/193		NotFnd	<56	56	U		400
PCB-191		NotFnd	<50	50	U		400
PCB-170		NotFnd	<70	70	U		400
PCB-190		NotFnd	<46	46	U		400
PCB-189	0.00003	NotFnd	<57	57	U		400
PCB-202		NotFnd	<28	28	U		400
PCB-201		NotFnd	<29	29	U		400
PCB-204		NotFnd	<25	25	U		400
PCB-197		NotFnd	<27	27	U		400
PCB-200		27.29	<29	29	U	20	400
PCB-198/199		NotFnd	<39	39	U		400
PCB-196		NotFnd	<40	40	U		400
PCB-203		NotFnd	<38	38	U		400
PCB-195		NotFnd	<41	41	U		400
PCB-194		NotFnd	<39	39	U		400
PCB-205		NotFnd	<36	36	U		400
PCB-208		NotFnd	<39	39	U		400
PCB-207		NotFnd	<41	41	U		400
PCB-206		NotFnd	<55	55	U		400
PCB-209		NotFnd	<16	16	U		400

Extraction Standards	**pg**	**Time**	**% Rec**	**Limits**	
13C12-PCB-001	4000	8.91	92	5-145	M
13C12-PCB-003	4000	10.43	100	5-145	M
13C12-PCB-004	4000	10.59	79	5-145	
13C12-PCB-015	4000	14.26	83	5-145	
13C12-PCB-019	4000	12.60	90	5-145	R
13C12-PCB-037	4000	18.20	79	5-145	
13C12-PCB-054	4000	14.45	65	5-145	
13C12-PCB-081	4000	21.77	76	10-145	
13C12-PCB-077	4000	22.08	74	10-145	
13C12-PCB-104	4000	17.49	68	10-145	
13C12-PCB-123	4000	23.06	85	10-145	
13C12-PCB-118	4000	23.23	80	10-145	
13C12-PCB-114	4000	23.52	80	10-145	
13C12-PCB-105	4000	23.89	82	10-145	
13C12-PCB-126	4000	25.48	73	10-145	
13C12-PCB-155	4000	20.46	83	10-145	
13C12-PCB-167	4000	26.37	73	10-145	
13C12-PCB-156/157	8000	27.01	70	10-145	
13C12-PCB-169	4000	28.67	77	10-145	
13C12-PCB-188	4000	23.46	77	10-145	
13C12-PCB-189	4000	29.95	68	10-145	
13C12-PCB-202	4000	26.24	68	10-145	
13C12-PCB-205	4000	31.33	80	10-145	R
13C12-PCB-208	4000	29.67	78	10-145	
13C12-PCB-206	4000	32.39	82	10-145	
13C12-PCB-209	4000	33.52	92	10-145	

Field Spike Standards			
13C12-PCB-031	0		NS
13C12-PCB-095	0		NS
13C12-PCB-153	0		NS

© Mostardi Platt

ALS Life sciences

Laboratory Method Blank Analysis Report

Sample Name	**Method Blank**	Sampling Date	n/a		Approved:
ALS Sample ID	WG2590247-4	Extraction Date	15-Aug-17		*E. Sabijic*
Analysis Method	EPA 1668C	Sample Size	1	blank	--e-signature--
Analysis Type	Blank	Percent Moisture	n/a		30-Aug-2017
Sample Matrix	XAD	Split Ratio	8		

Run Information	**Run 1**
Filename	5-170825D03
Run Date	26-Aug-17 15:58
Final Volume	25 ul
Dilution Factor	2
Analysis Units	pg
Instrument - Column	HRMS5 SPBOCTYL60164-03B

Target Analytes	**TEF (WHO 2005)**	**Ret. Time**	**Conc. pg**	**EDL pg**	**Flags**	**EMPC pg**	**LQL**
Homologue Group Totals							
Total MonoCB			1340	45	J		400
Total DiCB			2350	27	J		400
Total TriCB			1520	15	J		400
Total TetraCB			1070	23	J		400
Total PentaCB			937	37	J		400
Total HexaCB			252	44	J		400
Total HeptaCB			<40	40	U		400
Total OctaCB			<25	25	U		400
Total NonaCB			<39	39	U		400
DecaCB			<16	16	U		400
Total PCB			7470		J		
Toxic Equivalency - (WHO 2005)							
Lower Bound PCB TEQ			0.0174				
Mid Point PCB TEQ			4.58				
Upper Bound PCB TEQ			9.11				

EDL	Indicates the Estimated Detection Limit, based on the measured background noise for this target in this sample.
TEF	Indicates the Toxic Equivalency Factor TEQ Indicates the Toxic Equivalency
LQL	Lower Quantification Limit, based on the lowest calibration level corrected for sample size, splits and dilutions.
M	Indicates that a peak has been manually integrated.
U	Indicates that this compound was not detected above the EDL.
NS	Indicates that this standard has not been added
J	Indicates that the analyte was positively identifed. The associated numerical result is an estimate.
R	Indicates that the ion abundance ratio for this analyte did not meet the control limit. The reported value represents an estimated concentration.
EMPC	Estimated Maximum Possible Concentration – elevated detection limit due to interference or positive id criterion failure

© Mostardi Platt

ALS Life sciences

Laboratory Control Sample Analysis Report

Sample Name	**Laboratory Control Sample**	Sampling Date	n/a		Approved:
ALS Sample ID	WG2590247-2	Extraction Date	15-Aug-17		*E. Sabljic*
Analysis Method	EPA 1668C	Sample Size	1	n/a	--e-signature--
Analysis Type	LCS	Percent Moisture	n/a		30-Aug-2017
Sample Matrix	QC	Split Ratio	8		

Run Information	**Run 1**
Filename	5-170828A02
Run Date	28-Aug-17 13:55
Final Volume	25 ul
Dilution Factor	2
Analysis Units	% Rec
Instrument - Column	HRMS5 SPBOCTYL60164-03B

Target Analytes	**pg**	**Ret. Time**	**% Rec**	**Limits**	**Flags**
PCB-001	2000	8.90	127	60-135	
PCB-003	2000	10.44	106	60-135	
PCB-004	2000	10.61	114	60-135	
PCB-015	2000	14.29	93	60-135	
PCB-019	2000	12.61	108	60-135	
PCB-037	2000	18.21	89	60-135	
PCB-054	2000	14.47	109	60-135	
PCB-081	2000	21.80	98	60-135	
PCB-077	2000	22.09	99	60-135	
PCB-104	2000	17.50	103	60-135	
PCB-123	2000	23.08	87	60-135	
PCB-118	2000	23.25	95	60-135	
PCB-114	2000	23.54	89	60-135	
PCB-105	2000	23.90	86	60-135	
PCB-126	2000	25.50	89	60-135	
PCB-155	2000	20.47	99	60-135	
PCB-167	2000	26.38	105	60-135	
PCB-156/157	4000	27.02	101	60-135	
PCB-169	2000	28.68	101	60-135	
PCB-188	2000	23.48	105	60-135	
PCB-189	2000	29.95	100	60-135	
PCB-202	2000	26.25	112	60-135	
PCB-205	2000	31.34	98	60-135	
PCB-208	2000	29.67	123	60-135	
PCB-206	2000	32.40	124	60-135	
PCB-209	2000	33.52	116	60-135	

Extraction Standards		**Time**	**% Rec**	**Limits**	
13C12-PCB-001	4000	8.90	106	15-145	
13C12-PCB-003	4000	10.43	102	15-145	
13C12-PCB-004	4000	10.61	102	15-145	
13C12-PCB-015	4000	14.27	94	15-145	
13C12-PCB-019	4000	12.60	101	15-145	
13C12-PCB-037	4000	18.21	94	15-145	
13C12-PCB-054	4000	14.45	90	15-145	
13C12-PCB-081	4000	21.78	104	40-145	
13C12-PCB-077	4000	22.09	103	40-145	
13C12-PCB-104	4000	17.49	101	40-145	
13C12-PCB-123	4000	23.06	104	40-145	
13C12-PCB-118	4000	23.23	98	40-145	
13C12-PCB-114	4000	23.52	96	40-145	
13C12-PCB-105	4000	23.89	101	40-145	
13C12-PCB-126	4000	25.48	96	40-145	
13C12-PCB-155	4000	20.46	112	40-145	
13C12-PCB-167	4000	26.37	95	40-145	
13C12-PCB-156/157	8000	27.01	92	40-145	
13C12-PCB-169	4000	28.67	93	40-145	R
13C12-PCB-188	4000	23.46	98	40-145	
13C12-PCB-189	4000	29.93	83	40-145	
13C12-PCB-202	4000	26.24	89	40-145	
13C12-PCB-205	4000	31.32	108	40-145	
13C12-PCB-208	4000	29.66	98	40-145	
13C12-PCB-206	4000	32.38	97	40-145	
13C12-PCB-209	4000	33.49	106	40-145	

Field Spike Standards		
13C12-PCB-031	0	NS
13C12-PCB-095	0	NS
13C12-PCB-153	0	NS

NS	Indicates that this standard has not been added
R	Indicates that the ion abundance ratio for this analyte did not meet the control limit. The reported value represents an estimated concentration.

© Mostardi Platt

PCB TEST RESULTS SUMMARY
Run 1
Northern Metals, LLC
Pacific Street Yard
Common Stack STRU1
July 26, 2017

Analytes	Sample Catch			Concentration		Emissions		Blank
	(pg)	(pg-Blank)	(ug)	(ug/dcsm)	(ng/dcsm@7 O_2)	(ug/hr)		(pg)
Total PCBs	204000000.00	203985700.00	2.04E+02	3.79E+01	5.27E+06	5977267.43		14300
Sample volume (Vmstd, dscf)	189.95							
Volumetric Air Flow (DSCFM)	92767.58							
Average % CO_2 by volume, dry	0.00							
Average % O_2 by volume, dry	20.80							

© Mostardi Platt

PCB TEST RESULTS SUMMARY
Run 2
Northern Metals, LLC
Pacific Street Yard
Common Stack STRU1
July 27, 2017

Analytes	Sample Catch			Concentration		Emissions		Blank
	(pg)	(pg-Blank)	(ug)	(ug/dcsm)	(ng/dcsm@7 O_2)	(ug/hr)		(pg)
Total PCBs	240000000.00	239985700.00	2.40E+02	4.44E+01	6.17E+06	6909185.52		14300
Sample volume (Vmstd, dscf)	190.99							
Volumetric Air Flow (DSCFM)	91641.23							
Average % CO_2 by volume, dry	0.00							
Average % O_2 by volume, dry	20.80							

© Mostardi Platt

PCB TEST RESULTS SUMMARY
Run 4
Northern Metals, LLC
Pacific Street Yard
Common Stack STRU1
August 1, 2017

Analytes	Sample Catch			Concentration		Emissions		Blank
	(pg)	(pg-Blank)	(ug)	(ug/dcsm)	(ug/dcsm@7 O_2)	(ug/hr)		(pg)
Total PCBs	194000000.00	0.00	0.00E+00	0.00E+00	4.86E+06	0.00		14300
Sample volume (Vmstd, dscf)	195.84							
Volumetric Air Flow (DSCFM)	94414.57							
Average % CO_2 by volume, dry	0.00							
Average % O_2 by volume, dry	20.80							

Appendix F - Reference Method Test Data (Computerized Sheets)

© Mostardi Platt

Client:	Northern Metals, LLC		
Facility:	Pacific Street Yard		
Test Location:	Common Stack STRU1		
Project #:	M173006		
Test Method:	0061		
Test Engineer:	JRK		
Test Technician:	AJH		
	R1	**R2**	**R3**
Temp ID:	CM35	CM35	CM35
Meter ID:	CM35	CM35	CM35
Pitot ID:	164	164	164
Filter ID:	N/A	N/A	N/A
Filter Pre-Weight (grams):	N/A	N/A	N/A
Nozzle Diameter (Inches):	0.175	0.175	0.175
Meter Calibration Date:	7/10/2017	7/10/2017	7/10/2017
Meter Calibration Factor (Y):	0.998	0.998	0.998
Meter Orifice Setting (Delta H):	1.796	1.796	1.796
Nozzle Kit ID Number and Material:	Teflon	Teflon	Teflon
Pitot Tube Coefficient:	0.840		
Probe Length (Feet):	7.0		
Probe Liner Material:	Teflon		
Sample Plane:	Horizontal		
Port Length (Inches):	6.50		
Port Size (Diameter, Inches):	6.50		
Port Type:	Flange		
Duct Shape:	Circular		
Diameter (Feet):	5.78125		
Duct Area (Square Feet):	26.250		
Upstream Diameters:	0.5		
Downstream Diameters:	2.0		
Number of Ports Sampled:	2		
Number of Points per Port:	12		
Minutes per Point:	5.0		
Minutes per Reading:	5.0		
Total Number of Traverse Points:	24		
Test Length (Minutes):	120		
Train Type:	Anderson Box		
Source Condition:	Normal		
Servomex Serial Number:	ECOM #3		
Moisture Balance ID:	S10-18		
# of Runs	3		

© Mostardi Platt

Run 1-Method 0061

Client: Northern Metals, LLC
Facility: Pacific Street Yard
Test Location: Common Stack STRU1
Source Condition: Normal

Date: 8/1/17
Start Time: 8:20
End Time: 10:24

DRY GAS METER CONDITIONS

ΔH:	1.38	in. H_2O
Meter Temperature, Tm:	75.6	°F
Sqrt ΔP:	1.174	in. H_2O
Stack Temperature, Ts:	91.3	°F
Meter Volume, Vm:	79.541	ft^3
Meter Volume, Vmstd:	76.661	dscf
Meter Volume, Vwstd:	1.243	wscf
Isokinetic Variance:	101.2	%I
Test Length:	120.00	in mins.
Nozzle Diameter:	0.175	in inches
Barometric Pressure:	29.21	in Hg
Filter ID:	N/A	
Filter Pre Weight (grams):	N/A	

STACK CONDITIONS

Static Pressure	0.60	in. H_2O
Flue Pressure (Ps):	29.25	in. Hg. abs.
Carbon Dioxide:	0.00	%
Oxygen:	20.70	%
Nitrogen:	79.30	%
Gas Weight dry, Md:	28.828	lb/lb mole
Gas Weight wet, Ms:	28.655	lb/lb mole
Excess Air:	---	%
Gas Velocity, Vs:	68.399	fps
Volumetric Flow:	107,729	acfm
Volumetric Flow:	99,266	dscfm
Volumetric Flow:	100,876	scfm

MOISTURE DETERMINATION

Initial Impinger Content:	300.0	ml	Silica Initial Wt.	244.6	grams
Final Impinger Content:	302.0	ml	Silica Final Wt.	269.0	grams
Impinger Difference:	2.0	ml	Silica Difference:	24.4	grams

Total Water Gain: 26.4 Moisture, Bws: 0.016 **Supersaturation Value, Bws:** 0.051

Port-Point No.	Clock Time	Velocity Head Δp in. H2O	Orifice ΔH in. H2O	Actual Meter Vol. ft^3	Stack Temp °F	Meter Temp Inlet °F	Meter Temp Outlet °F	Probe Temp °F	Filter Exit Temp °F	Impinger Exit Temp °F
1-1	8:20:00	1.50	1.50	61.153	86	72	72	250		63
1-2	8:25:00	1.30	1.30	64.638	86	71	71	251		62
1-3	8:30:00	1.30	1.30	67.849	87	71	71	253		61
1-4	8:35:00	1.20	1.20	71.059	87	73	73	252		61
1-5	8:40:00	1.20	1.20	74.143	87	73	73	256		60
1-6	8:45:00	1.40	1.40	77.225	88	74	74	253		60
1-7	8:50:00	1.40	1.40	80.560	89	74	74	250		62
1-8	8:55:00	1.50	1.50	83.888	88	75	75	251		63
1-9	9:00:00	1.50	1.50	87.332	90	75	75	253		64
1-10	9:05:00	1.60	1.60	90.857	90	75	75	252		64
1-11	9:10:00	1.70	1.70	94.418	91	76	76	250		65
1-12	9:15:00	1.70	1.70	98.090	91	76	76	250		65
	9:20:00			101.760						
2-1	9:24:00	1.40	1.40	101.760	92	76	76	252		63
2-2	9:29:00	1.30	1.30	105.093	92	76	76	251		63
2-3	9:34:00	1.30	1.30	108.302	93	77	77	251		64
2-4	9:39:00	1.30	1.30	111.514	93	77	77	253		64
2-5	9:44:00	1.40	1.40	114.723	93	77	77	252		63
2-6	9:49:00	1.50	1.50	118.054	95	77	77	251		64
2-7	9:54:00	1.50	1.50	121.539	95	77	77	250		64
2-8	9:59:00	1.30	1.30	125.023	95	78	78	253		64
2-9	10:04:00	1.20	1.20	128.234	95	78	78	252		64
2-10	10:09:00	1.30	1.30	131.316	95	79	79	251		65
2-11	10:14:00	1.20	1.20	134.525	95	79	79	253		65
2-12	10:19:00	1.20	1.20	137.610	95	79	79	250		65
	10:24:00			140.694	95					
Total	2:00:00			79.541		75.6	75.6			
Average			1.38		91.3	75.6				
Min			1.20		86.0	71.0				
Max			1.70		95.0	79.0				

© Mostardi Platt

Run 2-Method 0061

Client: Northern Metals, LLC
Facility: Pacific Street Yard
Test Location: Common Stack STRU1
Source Condition: Normal

Date: 8/1/17
Start Time: 12:45
End Time: 14:48

DRY GAS METER CONDITIONS

ΔH:	1.38	in. H_2O
Meter Temperature, Tm:	90.0	°F
Sqrt ΔP:	1.171	in. H_2O
Stack Temperature, Ts:	107.4	°F
Meter Volume, Vm:	82.035	ft^3
Meter Volume, Vmstd:	76.991	dscf
Meter Volume, Vwstd:	2.515	wscf
Isokinetic Variance:	104.8	%I
Test Length:	120.00	in mins.
Nozzle Diameter:	0.175	in inches
Barometric Pressure:	29.21	in Hg
Filter ID:	N/A	
Filter Pre Weight (grams):	N/A	

STACK CONDITIONS

Static Pressure	0.60	in. H_2O
Flue Pressure (Ps):	29.25	in. Hg. abs.
Carbon Dioxide:	0.00	%
Oxygen:	20.80	%
Nitrogen:	79.2	%
Gas Weight dry, Md:	28.832	lb/lb mole
Gas Weight wet, Ms:	28.489	lb/lb mole
Excess Air:	---	%
Gas Velocity, Vs:	69.364	fps
Volumetric Flow:	109,250	acfm
Volumetric Flow:	96,253	dscfm
Volumetric Flow:	99,398	scfm

MOISTURE DETERMINATION

Initial Impinger Content:	300.0	ml	Silica Initial Wt.	239.9	grams
Final Impinger Content:	332.0	ml	Silica Final Wt.	261.3	grams
Impinger Difference:	32.0	ml	Silica Difference:	21.4	grams

Total Water Gain: 53.4 Moisture, Bws: 0.032 **Supersaturation Value, Bws: 0.082**

Port-Point No.	Clock Time	Velocity Head Δp in. H2O	Orifice ΔH in. H2O	Actual Meter Vol. ft^3	Stack Temp °F	Meter Temp Inlet °F	Meter Temp Outlet °F	Probe Temp °F	Filter Exit Temp °F	Impinger Exit Temp °F
1-1	12:45:00	1.50	1.50	42.000	106	88	88	251		62
1-2	12:50:00	1.40	1.40	45.577	107	87	87	253		61
1-3	12:55:00	1.30	1.30	49.034	107	87	87	250		60
1-4	13:00:00	1.20	1.20	52.361	108	88	88	252		60
1-5	13:05:00	1.10	1.10	55.560	107	89	89	254		61
1-6	13:10:00	1.40	1.40	58.623	106	88	88	250		62
1-7	13:15:00	1.50	1.50	62.076	107	88	88	252		63
1-8	13:20:00	1.40	1.40	65.653	108	89	89	254		63
1-9	13:25:00	1.50	1.50	69.109	108	90	90	251		64
1-10	13:30:00	1.70	1.70	72.684	109	90	90	250		64
1-11	13:35:00	1.60	1.60	76.490	108	91	91	252		65
1-12	13:40:00	1.60	1.60	80.185	107	91	91	250		66
	13:45:00			83.876						
2-1	13:48:00	1.40	1.40	83.876	107	90	90	251		64
2-2	13:53:00	1.40	1.40	87.332	107	90	90	250		63
2-3	13:58:00	1.30	1.30	90.786	108	90	90	253		63
2-4	14:03:00	1.20	1.20	94.115	108	90	90	252		63
2-5	14:08:00	1.30	1.30	97.316	107	91	91	250		62
2-6	14:13:00	1.40	1.40	100.643	109	91	91	254		62
2-7	14:18:00	1.60	1.60	104.337	107	91	91	256		62
2-8	14:23:00	1.40	1.40	107.791	107	92	92	251		63
2-9	14:28:00	1.20	1.20	111.244	108	92	92	250		63
2-10	14:33:00	1.30	1.30	114.443	108	92	92	251		64
2-11	14:38:00	1.20	1.20	117.772	107	93	93	250		64
2-12	14:43:00	1.10	1.10	120.973	107	93	93	250		64
	14:48:00			124.035						
Total	2:00:00			82.035		90.0	90.0			
Average			1.38		107.4	90.0				
Min			1.10		106.0	87.0				
Max			1.70		109.0	93.0				

© Mostardi Platt

Run 3-Method 0061

Client: Northern Metals, LLC
Facility: Pacific Street Yard
Test Location: Common Stack STRU1
Source Condition: Normal

Date: 8/1/17
Start Time: 15:10
End Time: 17:13

DRY GAS METER CONDITIONS

ΔH:	1.38	In. H_2O
Meter Temperature, Tm:	88.8	°F
Sqrt ΔP:	1.174	In. H_2O
Stack Temperature, Ts:	102.4	°F
Meter Volume, Vm:	82.275	ft^3
Meter Volume, Vmstd:	78.713	dscf
Meter Volume, Vwstd:	2.374	wscf
Isokinetic Variance:	105.3	%I
Test Length:	120.00	in mins.
Nozzle Diameter:	0.175	in inches
Barometric Pressure:	29.71	in Hg
Filter ID:	N/A	
Filter Pre Weight (grams):	N/A	

STACK CONDITIONS

Static Pressure	0.80	in. H_2O
Flue Pressure (Ps):	29.77	in. Hg. abs.
Carbon Dioxide:	0.00	%
Oxygen:	20.90	%
Nitrogen:	79.1	%
Gas Weight dry, Md:	28.836	lb/lb mole
Gas Weight wet, Ms:	28.519	lb/lb mole
Excess Air:	---	%
Gas Velocity, Vs:	68.616	fps
Volumetric Flow:	108,072	acfm
Volumetric Flow:	97,997	dscfm
Volumetric Flow:	100,953	scfm

MOISTURE DETERMINATION

Initial Impinger Content:	300.0	ml	Silica Initial Wt.	244.2	grams
Final Impinger Content:	330.0	ml	Silica Final Wt.	264.6	grams
Impinger Difference:	30.0	ml	Silica Difference:	20.4	grams

Total Water Gain: 50.4 Moisture, Bws: 0.029 **Supersaturation Value, Bws: 0.070**

Port-Point No.	Clock Time	Velocity Head Δp in. H2O	Orifice ΔH in. H2O	Actual Meter Vol. ft^3	Stack Temp °F	Meter Temp Inlet °F	Meter Temp Outlet °F	Probe Temp °F	Filter Exit Temp °F	Impinger Exit Temp °F
1-1	15:10	1.50	1.50	25.650	102	88	88	250		64
1-2	15:15	1.40	1.40	29.230	103	87	87	251		63
1-3	15:20	1.40	1.40	32.683	102	87	87	252		63
1-4	15:25	1.10	1.10	36.139	102	86	86	251		62
1-5	15:30	1.10	1.10	39.201	102	87	87	250		61
1-6	15:35	1.40	1.40	42.265	103	88	88	253		61
1-7	15:40	1.50	1.50	45.720	103	89	89	252		61
1-8	15:45	1.50	1.50	49.296	104	90	90	251		60
1-9	15:50	1.40	1.40	52.871	103	90	90	250		60
1-10	15:55	1.70	1.70	56.326	102	91	91	250		61
1-11	16:00	1.60	1.60	60.133	103	92	92	251		62
1-12	16:05	1.60	1.60	63.827	103	92	92	253		62
	16:10			67.520						
2-1	16:13	1.50	1.50	67.520	102	88	88	252		63
2-2	16:18	1.40	1.40	71.100	102	88	88	256		62
2-3	16:23	1.40	1.40	74.553	103	89	89	251		62
2-4	16:28	1.10	1.10	78.010	102	89	89	250		62
2-5	16:33	1.30	1.30	81.071	102	90	90	250		61
2-6	16:38	1.50	1.50	84.400	101	90	90	253		61
2-7	16:43	1.50	1.50	87.976	101	89	89	251		61
2-8	16:48	1.40	1.40	91.552	102	89	89	250		62
2-9	16:53	1.30	1.30	95.008	103	88	88	253		62
2-10	16:58	1.20	1.20	98.336	103	88	88	252		63
2-11	17:03	1.30	1.30	101.536	102	88	88	249		63
2-12	17:08	1.10	1.10	104.866	102	88	88	251		64
	17:13			107.925						
Total	2:00:00			82.275		88.8	88.8			
Average			1.38		102.4	88.8				
Min			1.10		101.0	86.0				
Max			1.70		104.0	92.0				

© Mostardi Platt

Client:		Northern Metals, LLC	
Facility:		Pacific Street Yard	
Test Location:		Common Stack STRU1	
Project #:		M173006	
Test Method:		Asbestos	
Test Engineer:		KJC	
Test Technician:		JJB	
	R1	**R2**	**R3**
Temp ID:	CM35	CM35	CM35
Meter ID:	CM35	CM35	CM35
Pitot ID:	164	164	164
Nozzle Diameter (Inches):	0.211	0.178	0.178
Meter Calibration Factor (Y):	0.998	0.998	0.998
Meter Orifice Setting (Delta H):	1.796	1.796	1.796
Nozzle Kit ID Number and Material:	Teflon #11	Teflon #11	Teflon #11
Pitot Tube Coefficient:		0.840	
Probe Length (Feet):		7.0	
Probe Liner Material:		Glass	
Sample Plane:		Horizontal	
Port Length (Inches):		6.50	
Port Size (Diameter, Inches):		6.50	
Port Type:		Nipple	
Duct Shape:		Circular	
Diameter (Feet):		5.78125	
Duct Area (Square Feet):		26.250	
Upstream Diameters:		2.000	
Downstream Diameters:		0.500	
Number of Ports Sampled:		2	
Number of Points per Port:		12	
Minutes per Point:		5.0	
Minutes per Reading:		5.0	
Total Number of Traverse Points:		24	
Test Length (Minutes):		120	
Train Type:		Anderson Box	
Source Condition:		Normal	
Servomex Serial Number:		ECOM #3	
Moisture Balance ID:		S10-18	
# of Runs		3	

© Mostardi Platt

Run 1- Asbestos

Client: Northern Metals, LLC
Facility: Pacific Street Yard
Test Location: Common Stack STRU1
Source Condition: Normal

Date: 7/26/17
Start Time: 7:55
End Time: 11:33

DRY GAS METER CONDITIONS

ΔH:	2.79	in. H_2O
Meter Temperature, Tm:	73.7	°F
Sqrt ΔP:	1.148	in. H_2O
Stack Temperature, Ts:	98.7	°F
Meter Volume, Vm:	111.727	ft^3
Meter Volume, Vmstd:	110.518	dscf
Meter Volume, Vwstd:	3.895	wscf
Isokinetic Variance:	103.9	%I
Test Length	120.00	in mins.
Nozzle Diameter	0.211	in inches
Barometric Pressure	29.77	in Hg

STACK CONDITIONS

Static Pressure	0.60	in. H_2O
Flue Pressure (Ps):	29.81	in. Hg. abs.
Carbon Dioxide:	0.00	%
Oxygen:	20.80	%
Nitrogen:	79.20	%
Gas Weight dry, Md:	28.832	lb/lb mole
Gas Weight wet, Ms:	28.463	lb/lb mole
Excess Air:	---	%
Gas Velocity, Vs:	66.901	fps
Volumetric Flow:	105,370	acfm
Volumetric Flow:	95,857	dscfm
Volumetric Flow:	99,236	scfm

MOISTURE DETERMINATION

Initial Impinger Content:	2094.1	ml	Silica Initial Wt.	755.9	grams
Final Impinger Content:	2143.9	ml	Silica Final Wt.	788.8	grams
Impinger Difference:	49.8	ml	Silica Difference:	32.9	grams

Total Water Gain: 82.7 Moisture, Bws: 0.034 **Supersaturation Value, Bws:** 0.062

Port-Point No.	Clock Time	Velocity Head Δp in. H2O	Orifice ΔH in. H2O	Actual Meter Vol. ft^3	Stack Temp °F	Meter Temp Inlet °F	Meter Temp Outlet °F	Sqrt. Δp	Collected Vol. ft^3	Point Vel ft/sec
1-1	7:55:00	1.40	3.00	83.211	90	70	70	1.183	2.260	68.941
	7:57:00			85.471						
1	8:55:00	1.40	3.00	85.471	90	70	70	1.183	2.609	68.941
2	8:58:00	1.50	3.20	88.080	94	70	70	1.225	5.030	71.361
3	9:03:00	1.30	2.80	93.110	95	70	70	1.140	4.690	66.433
4	9:08:00	1.30	2.80	97.800	95	70	70	1.140	4.690	66.433
5	9:13:00	1.10	2.30	102.490	96	71	71	1.049	4.310	61.110
6	9:18:00	1.00	2.10	106.800	97	71	71	1.000	4.110	58.266
7	9:23:00	0.96	2.00	110.910	97	72	72	0.980	4.020	57.088
8	9:28:00	1.10	2.30	114.930	98	72	72	1.049	4.310	61.110
9	9:33:00	1.30	2.80	119.240	99	72	72	1.140	4.690	66.433
10	9:38:00	1.30	2.80	123.930	100	73	73	1.140	4.690	66.433
11	9:43:00	1.40	3.00	128.620	101	74	74	1.183	4.860	68.941
12	9:48:00	1.10	2.30	133.480	101	74	74	1.049	4.316	61.110
	9:53:00			137.796						
2-1	10:00:00	1.70	3.50	137.796	102	75	75	1.304	5.294	75.969
2	10:05:00	1.90	3.90	143.090	102	75	75	1.378	5.590	80.314
3	10:10:00	1.90	3.90	148.680	102	75	75	1.378	5.590	80.314
4	10:15:00	1.70	3.50	154.270	102	75	75	1.304	2.157	75.969
	10:17:00			156.427						
4	10:50:00	1.70	3.50	156.427	98	75	75	1.304	3.123	75.969
5	10:53:00	1.60	3.30	159.550	100	75	75	1.265	5.130	73.701
6	10:58:00	1.40	2.90	164.680	100	77	77	1.183	4.800	68.941
7	11:03:00	1.20	2.50	169.480	100	76	76	1.095	4.440	63.827
8	11:08:00	1.10	2.30	173.920	100	77	77	1.049	4.250	61.110
9	11:13:00	0.97	2.00	178.170	101	76	76	0.985	4.000	57.385
10	11:18:00	1.10	2.30	182.170	101	77	77	1.049	4.250	61.110
11	11:23:00	1.10	2.30	186.420	102	77	77	1.049	4.250	61.110
12	11:28:00	1.10	2.30	190.670	102	77	77	1.049	4.268	61.110
	11:33:00			194.938						
Total	2:00:00			111.727		73.7	73.7		111.727	
Average			2.79		98.7	73.7		1.148		
Min			2.00		90.0	70.0		0.980		
Max			3.90		102.0	77.0		1.378		

© Mostardi Platt

Run 2- Asbestos

Client: Northern Metals, LLC
Facility: Pacific Street Yard
Test Location: Common Stack STRU1
Source Condition: Normal

Date: 7/26/17
Start Time: 12:50
End Time: 16:25

DRY GAS METER CONDITIONS			STACK CONDITIONS		
ΔH:	1.41	In. H_2O	Static Pressure	0.60	in. H_2O
Meter Temperature, Tm:	82.5	°F	Flue Pressure (Ps):	29.81	in. Hg. abs.
Sqrt ΔP:	1.175	In. H_2O	Carbon Dioxide:	0.00	%
Stack Temperature, Ts:	103.1	°F	Oxygen:	20.80	%
Meter Volume, Vm:	80.549	ft^3	Nitrogen:	79.2	%
Meter Volume, Vmstd:	78.112	dscf	Gas Weight dry, Md:	28.832	lb/lb mole
Meter Volume, Vwstd:	3.443	wscf	Gas Weight wet, Ms:	28.375	lb/lb mole
Isokinetic Variance:	102.0	%I	Excess Air:	---	%
			Gas Velocity, Vs:	68.850	fps
Test Length	120.00	in mins.	Volumetric Flow:	108,440	acfm
Nozzle Diameter	0.178	in inches	Volumetric Flow:	97,039	dscfm
Barometric Pressure	29.77	in Hg	Volumetric Flow:	101,316	scfm

MOISTURE DETERMINATION

Initial Impinger Content:	2149.3	ml	Silica Initial Wt.	829.7	grams
Final Impinger Content:	2200.7	ml	Silica Final Wt.	851.4	grams
Impinger Difference:	51.4	ml	Silica Difference:	21.7	grams

Total Water Gain: 73.1 Moisture, Bws: 0.042 **Supersaturation Value, Bws: 0.071**

Port-Point No.	Clock Time	Velocity Head Δp In. H2O	Orifice ΔH in. H2O	Actual Meter Vol. ft^3	Stack Temp °F	Meter Temp Inlet °F	Meter Temp Outlet °F	Sqrt. Δp	Collected Vol. ft^3	Point Vel ft/sec
1_1	12:50:00	1.30	1.30	95.762	104	81	81	1.140	3.258	66.802
2	12:55:00	1.30	1.30	99.020	104	81	81	1.140	3.260	66.802
3	13:00:00	1.60	1.60	102.280	104	80	80	1.265	3.610	74.111
4	13:05:00	1.50	1.50	105.890	104	80	80	1.225	3.490	71.757
5	13:10:00	1.40	1.40	109.380	104	81	81	1.183	3.380	69.324
6	13:15:00	1.20	1.20	112.760	104	81	81	1.095	3.130	64.182
7	13:20:00	1.10	1.10	115.890	104	82	82	1.049	2.990	61.449
8	13:25:00	1.30	1.30	118.880	104	82	82	1.140	3.260	66.802
9	13:30:00	1.40	1.40	122.140	104	82	82	1.183	3.380	69.324
10	13:35:00	1.50	1.50	125.520	104	82	82	1.225	3.490	71.757
11	13:40:00	1.30	1.30	129.010	104	82	82	1.140	3.260	66.802
12	13:45:00	1.20	1.20	132.270	104	82	82	1.095	3.136	64.182
	13:50:00			135.406						
2_1	15:25:00	2.20	2.30	135.406	102	82	82	1.483	4.244	86.902
2	15:30:00	2.00	2.10	139.650	100	83	83	1.414	4.030	82.858
3	15:35:00	2.10	2.20	143.680	100	83	83	1.449	4.140	84.904
4	15:40:00	1.70	1.70	147.820	101	84	84	1.304	3.720	76.391
5	15:45:00	1.50	1.50	151.540	101	83	83	1.225	3.500	71.757
6	15:50:00	1.50	1.50	155.040	101	84	84	1.225	3.500	71.757
7	15:55:00	1.40	1.40	158.540	102	84	84	1.183	3.370	69.324
8	16:00:00	1.00	1.00	161.910	104	84	84	1.000	2.860	58.590
9	16:05:00	0.98	1.00	164.770	104	84	84	0.990	2.830	58.001
10	16:10:00	1.10	1.10	167.600	104	84	84	1.049	2.990	61.449
11	16:15:00	1.00	1.00	170.590	104	85	85	1.000	2.860	58.590
12	16:20:00	1.00	1.00	173.450	104	85	85	1.000	2.861	58.590
	16:25:00			176.311						
Total	2:00:00			80.549		82.5	82.5		80.549	
Average			1.41		103.1	82.5		1.175		
Min			1.00		100.0	80.0		0.990		
Max			2.30		104.0	85.0		1.483		

© Mostardi Platt

Run 3- Asbestos

Client: Northern Metals, LLC
Facility: Pacific Street Yard
Test Location: Common Stack STRU1
Source Condition: Normal

Date: 7/27/17
Start Time: 10:05
End Time: 13:35

DRY GAS METER CONDITIONS

ΔH:	1.48	In. H_2O
Meter Temperature, Tm:	82.8	°F
Sqrt ΔP:	1.176	In. H_2O
Stack Temperature, Ts:	99.5	°F
Meter Volume, Vm:	83.061	ft^3
Meter Volume, Vmstd:	78.821	dscf
Meter Volume, Vwstd:	2.784	wscf
Isokinetic Variance:	102.9	%I
Test Length	120.00	in mins.
Nozzle Diameter	0.178	in inches
Barometric Pressure	29.14	in Hg

STACK CONDITIONS

Static Pressure	0.60	in. H_2O
Flue Pressure (Ps):	29.18	in. Hg. abs.
Carbon Dioxide:	0.00	%
Oxygen:	20.90	%
Nitrogen:	79.1	%
Gas Weight dry, Md:	28.836	lb/lb mole
Gas Weight wet, Ms:	28.466	lb/lb mole
Excess Air:	---	%
Gas Velocity, Vs:	69.316	fps
Volumetric Flow:	109,174	acfm
Volumetric Flow:	97,058	dscfm
Volumetric Flow:	100,486	scfm

MOISTURE DETERMINATION

Initial Impinger Content:	2099.8	ml	Silica Initial Wt.	755.6	grams
Final Impinger Content:	2136.9	ml	Silica Final Wt.	777.6	grams
Impinger Difference:	37.1	ml	Silica Difference:	22.0	grams

Total Water Gain: 59.1 Moisture, Bws: 0.034 **Supersaturation Value, Bws: 0.065**

Port-Point No.	Clock Time	Velocity Head Δp in. H2O	Orifice ΔH in. H2O	Actual Meter Vol. ft^3	Stack Temp °F	Meter Temp Inlet °F	Meter Temp Outlet °F	Sqrt. Δp	Collected Vol. ft^3	Point Vel ft/sec
1_1	10:05:00	2.10	2.20	76.936	100	77	77	1.449	4.244	85.405
2	10:10:00	2.10	2.20	81.180	100	78	78	1.449	4.240	85.405
3	10:15:00	2.20	2.30	85.420	101	79	79	1.483	4.340	87.414
4	10:20:00	1.90	2.00	89.760	101	79	79	1.378	4.030	81.236
5	10:25:00	1.70	1.80	93.790	102	80	80	1.304	3.810	76.842
6	10:30:00	1.50	1.60	97.600	102	80	80	1.225	3.590	72.180
7	10:35:00	1.40	1.50	101.190	102	80	80	1.183	3.460	69.733
8	10:40:00	1.00	1.00	104.650	101	81	81	1.000	2.920	58.935
9	10:45:00	1.00	1.00	107.570	101	81	81	1.000	2.940	58.935
10	10:50:00	1.20	1.20	110.510	101	82	82	1.095	3.160	64.560
11	10:55:00	1.20	1.20	113.670	101	82	82	1.095	3.240	64.560
12	11:00:00	1.10	1.10	116.910	101	83	83	1.049	3.067	61.811
	11:05:00			119.977						
2_1	12:35:00	1.60	1.70	119.977	97	86	86	1.265	3.753	74.547
2	12:40:00	1.40	1.50	123.730	98	86	86	1.183	3.500	69.733
3	12:45:00	1.30	1.40	127.230	98	86	86	1.140	3.370	67.196
4	12:50:00	1.30	1.40	130.600	97	84	84	1.140	3.380	67.196
5	12:55:00	1.10	1.20	133.980	97	86	86	1.049	3.100	61.811
6	13:00:00	1.00	1.10	137.080	98	87	87	1.000	2.960	58.935
7	13:05:00	1.00	1.10	140.040	99	87	87	1.000	2.970	58.935
8	13:10:00	1.20	1.30	143.010	98	86	86	1.095	3.240	64.560
9	13:15:00	1.40	1.50	146.250	98	85	85	1.183	3.500	69.733
10	13:20:00	1.50	1.60	149.750	98	85	85	1.225	3.620	72.180
11	13:25:00	1.30	1.40	153.370	99	84	84	1.140	3.380	67.196
12	13:30:00	1.20	1.30	156.750	99	84	84	1.095	3.247	64.560
	13:35:00			159.997						
Total	2:00:00			83.061		82.8	82.8		83.061	
Average			1.48		99.5	82.8		1.176		
Min			1.00		97.0	77.0		1.000		
Max			2.30		102.0	87.0		1.483		

© Mostardi Platt

Method 30B (Sorbent Trap) Mercury Test Results Summary

Northern Metals, LLC

Pacific Street Yard Facility

Common Stack STRU1

Test No.	Date	Start Time	End Time	V_m (standard L)	ng detected	ppb	ug/dscm	ug/wscm	oz/hr	lb/hr
1A	8/1/2017	9:47	10:47	30.197	28.3	0.112	0.937	0.922	0.006	0.0003
1B				28.626	30.9	0.129	1.079	1.062	0.006	0.0004
Average					29.6	0.121	1.008	**0.992**	0.010	**0.0004**
2A	8/1/2017	11:14	12:14	32.264	60.8	0.226	1.884	1.854	0.011	0.0007
2B				31.683	58.3	0.221	1.840	1.811	0.011	0.0007
Average					59.6	0.223	1.862	**1.832**	0.010	**0.0007**
3A	8/1/2017	12:50	13:50	30.348	1,348.6	5.327	44.437	43.015	0.256	0.0160
3B				30.590	1,050.0	4.115	34.325	33.227	0.198	0.0124
Average					1,199.3	4.721	39.381	**38.121**	0.230	**0.0142**
4A	8/1/2017	15:10	16:10	30.505	26.6	0.105	0.872	0.847	0.005	0.0003
4B				30.662	26.2	0.102	0.854	0.830	0.005	0.0003
Average					26.4	0.103	0.863	**0.838**	0.010	**0.0003**
Runs 1, 2, and 4 Average										**0.0005**

Run 3 did not meet the Method 30B acceptance criteria because the data was out of the calibration range and the spike recovery value did not meet the 85% to 115% criteria

Volumetric flows to calculate emissions on a lb/hr basis were determined during concurrect Method 0061 testing

METHOD 30B TEST RESULTS

Project #:	M173006	**Location:**	Common Stack STRU1
Client:	Northern Metals, LLC	**Condition:**	Normal Load
Facility:	Pacific Street Yard Facility	**Data Taken By:**	JFR
Analyzer ID:	1496		

Run 1

Run 1 Source Data		1A Trap Data		1B Trap Data	
Date:	8/1/2017	1A Trap ID:	OLC043150	1B Trap ID:	OL308930
Start Time:	9:47	Hg (ng):	28.3	Hg (ng):	30.9
End Time:	10:47	Meter Temperature (°F):	86.60	Meter Temperature (°F):	86.20
Pressure, Barometric(Hg"):	29.210	Meter ID:	M2	Meter ID:	M2
Water Vapor in Flue Gas (Bws):	0.016	Meter Calibration (Y):	0.998	Meter Calibration (Y):	1.000
CO2 % (dry):	0.00	Initial Volume (liters):	0	Initial Volume (liters):	0
O2 % (dry):	20.70	Final Volume (liters):	32.085	Final Volume (liters):	30.333
Flowrate (SCFH):	6,052,560	Meter Volume (Standard liters):	30.197	Meter Volume (Standard liters):	28.626
		Hg (ppb):	0.112	Hg (ppb):	0.129
		Hg (ug/dscm):	0.937	Hg (ug/dscm):	1.079
Flowrate (SCFM):	100,876	Hg (ug/wscm):	0.922	Hg (ug/wscm):	1.062
		Hg (lb/Gwh):			
				Spiked Trap Run:	Y
				Spike Concentration:	50

Run 2

Run 2 Source Data		2A Trap Data		2B Trap Data	
Date:	8/1/2017	2A Trap ID:	OLC041747	2B Trap ID:	OL369616
Start Time:	11:14	Hg (ng):	60.8	Hg (ng):	58.3
End Time:	12:14	Meter Temperature (°F):	98.77	Meter Temperature (°F):	96.00
Pressure, Barometric(Hg"):	29.210	Meter ID:	M2	Meter ID:	M2
Water Vapor in Flue Gas (Bws):	0.016	Meter Calibration (Y):	0.998	Meter Calibration (Y):	1.000
CO2 % (dry):	0.00	Initial Volume (liters):	0	Initial Volume (liters):	0
O2 % (dry):	20.70	Final Volume (liters):	35.044	Final Volume (liters):	34.174
Flowrate (SCFH):	6,052,560	Meter Volume (Standard liters):	32.264	Meter Volume (Standard liters):	31.683
		Hg (ppb):	0.226	Hg (ppb):	0.221
		Hg (ug/dscm):	1.884	Hg (ug/dscm):	1.840
Flowrate (SCFM):	100,876	Hg (ug/wscm):	1.854	Hg (ug/wscm):	1.811
		Hg (lb/Gwh):			
				Spiked Trap Run:	Y
				Spike Concentration:	50

Run 3

Run 3 Source Data		3A Trap Data		3B Trap Data	
Date:	8/1/2017	3A Trap ID:	OLC050912	3B Trap ID:	OL333669
Start Time:	12:50	Hg (ng):	1348.6	Hg (ng):	1050.0
End Time:	13:50	Meter Temperature (°F):	98.46	Meter Temperature (°F):	95.23
Pressure, Barometric(Hg"):	29.160	Meter ID:	M2	Meter ID:	M2
Water Vapor in Flue Gas (Bws):	0.032	Meter Calibration (Y):	0.998	Meter Calibration (Y):	1.000
CO2 % (dry):	0.00	Initial Volume (liters):	0	Initial Volume (liters):	0
O2 % (dry):	20.80	Final Volume (liters):	33.002	Final Volume (liters):	33.006
Flowrate (SCFH):	5,963,880	Meter Volume (Standard liters):	30.348	Meter Volume (Standard liters):	30.590
		Hg (ppb):	5.327	Hg (ppb):	4.115
		Hg (ug/dscm):	44.437	Hg (ug/dscm):	34.325
Flowrate (SCFM):	99,398	Hg (ug/wscm):	43.015	Hg (ug/wscm):	33.227
		Hg (lb/Gwh):			
				Spiked Trap Run:	Y
				Spike Concentration:	50

© Mostardi Platt

METHOD 30B TEST RESULTS

Project #:	**M173006**	**Location:**	**Common Stack STRU1**
Client:	**Northern Metals, LLC**	**Condition:**	**Normal Load**
Facility:	**Pacific Street Yard Facility**	**Data Taken By:**	**JFR**
Analyzer ID:	**1496**		

Run 4					
Run 4 Source Data		4A Trap Data		4B Trap Data	
Date:	8/1/2017	**4A Trap ID:**	OLC050919	**4B Trap ID:**	OL387883
Start Time:	15:10	**Hg (ng):**	26.6	**Hg (ng):**	26.2
End Time:	16:10	**Meter Temperature (°F):**	96.54	**Meter Temperature (°F):**	94.85
Pressure, Barometric(Hg"):	29.210	**Meter ID:**	M2	**Meter ID:**	M2
Water Vapor in Flue Gas (Bws):	0.029	**Meter Calibration (Y):**	0.998	**Meter Calibration (Y):**	1.000
CO2 % (dry):	0.0	**Initial Volume (liters):**	0	**Initial Volume (liters):**	0
O2 % (dry):	20.9	**Final Volume (liters):**	33.002	**Final Volume (liters):**	33.005
Flowrate (SCFH):	6,057,180	**Meter Volume (Standard liters):**	30.505	**Meter Volume (Standard liters):**	30.662
		Hg (ppb):	0.105	**Hg (ppb):**	0.102
		Hg (ug/dscm):	0.872	**Hg (ug/dscm):**	0.854
Flowrate (SCFM):	100,953	**Hg (ug/wscm):**	0.847	**Hg (ug/wscm):**	0.830
				Spiked Trap Run:	Y
				Spike Concentration:	50

© Mostardi Platt

Client:	Northern Metals, LLC			
Facility:	Pacific Street Yard			
Test Location:	Common Stack STRU1			
Project #:	M173006			
Test Method:	23			
Test Engineer:	JJR			
Test Technician:	JJB			
	R1	**R2**	**R3**	**R4**
Temp ID:	CM11	CM11	CM11	CM11
Meter ID:	CM11	CM11	CM11	CM11
Pitot ID:	48	48	48	48
Nozzle Diameter (Inches):	0.202	0.202	0.202	0.202
Meter Calibration Factor (Y):	0.993	0.993	0.993	0.993
Meter Orifice Setting (Delta H):	1.747	1.747	1.747	1.747
Nozzle Kit ID Number and Material:	Glass #10	Glass #10	Glass #10	Glass #10
Pitot Tube Coefficient:	0.840			
Probe Length (Feet):	7.0			
Probe Liner Material:	Glass			
Sample Plane:	Horizontal			
Port Length (Inches):	6.50			
Port Size (Diameter, Inches):	6.50			
Port Type:	Nipple			
Duct Shape:	Circular			
Diameter (Feet):	5.78125			
Duct Area (Square Feet):	26.250			
Upstream Diameters:	2.000			
Downstream Diameters:	0.500			
Number of Ports Sampled:	2			
Number of Points per Port:	12			
Minutes per Point:	10.0			
Minutes per Reading:	5.0			
Total Number of Traverse Points:	24			
Test Length (Minutes):	240			
Train Type:	Anderson Box			
Source Condition:	Normal			
Servomex Serial Number:	ECOM #3			
Moisture Balance ID:	S10-18			
# of Runs	4			

© Mostardi Platt

Run 1-Method 23

Client: Northern Metals, LLC
Facility: Pacific Street Yard
Test Location: Common Stack STRU1
Source Condition: Normal

Date: 7/26/17
Start Time: 10:00
End Time: 15:15

DRY GAS METER CONDITIONS

ΔH:	2.11	in. H_2O
Meter Temperature, Tm:	81.5	°F
Sqrt ΔP:	1.119	in. H_2O
Stack Temperature, Ts:	104.0	°F
Meter Volume, Vm:	196.150	ft^3
Meter Volume, Vmstd:	189.952	dscf
Meter Volume, Vwstd:	7.131	wscf
Isokinetic Variance:	100.7	%I
Test Length	240.00	in mins.
Nozzle Diameter	0.202	in inches
Barometric Pressure	29.77	in Hg

STACK CONDITIONS

Static Pressure	0.60	in. H_2O
Flue Pressure (Ps):	29.81	in. Hg. abs.
Carbon Dioxide:	0.00	%
Oxygen:	20.80	%
Nitrogen:	79.20	%
Gas Weight dry, Md:	28.832	lb/lb mole
Gas Weight wet, Ms:	28.440	lb/lb mole
Excess Air:	---	%
Gas Velocity, Vs:	65.512	fps
Volumetric Flow:	103,182	acfm
Volumetric Flow:	92,768	dscfm
Volumetric Flow:	96,250	scfm

MOISTURE DETERMINATION

Initial Impinger Content:	1943.2	ml	Silica Initial Wt.	845.6	grams
Final Impinger Content:	2044.1	ml	Silica Final Wt.	896.1	grams
Impinger Difference:	100.9	ml	Silica Difference:	50.5	grams

Total Water Gain: 151.4 Moisture, Bws: 0.036 **Supersaturation Value, Bws: 0.073**

Port-Point No.	Clock Time	Velocity Head Δp in. H2O	Orifice ΔH In. H2O	Actual Meter Vol. ft^3	Stack Temp °F	Meter Temp Inlet °F	Meter Temp Outlet °F	Sqrt. Δp	Collected Vol. ft^3	Point Vel ft/sec
1-1	10:00:00	1.10	1.80	67.928	102	73	73	1.049	3.872	61.427
1	10:05:00	1.20	2.00	71.800	102	73	73	1.095	4.010	64.159
2	10:10:00	1.30	2.10	75.810	103	73	73	1.140	4.210	66.779
2	10:15:00	1.30	2.10	80.020	104	73	73	1.140	1.139	66.779
	10:17:00			81.159						
3	10:50:00	1.20	2.00	81.159	102	73	73	1.095	2.891	64.159
3	10:53:00	1.20	2.00	84.050	102	75	74	1.095	4.000	64.159
4	10:58:00	1.20	2.00	88.050	102	76	74	1.095	4.130	64.159
4	11:03:00	1.00	2.10	92.180	102	77	75	1.000	3.700	58.569
5	11:08:00	1.10	1.80	95.880	102	77	75	1.049	3.810	61.427
5	11:13:00	1.00	1.70	99.690	102	77	75	1.000	3.780	58.569
6	11:18:00	0.98	1.60	103.470	103	78	76	0.990	3.630	57.980
6	11:23:00	0.98	1.60	107.100	103	79	76	0.990	3.610	57.980
7	11:28:00	0.99	1.60	110.710	103	78	77	0.995	3.760	58.275
7	11:33:00	1.00	1.70	114.470	103	78	77	1.000	3.680	58.569
8	11:38:00	1.00	1.70	118.150	103	78	77	1.000	3.660	58.569
8	11:43:00	1.10	1.70	121.810	103	78	77	1.049	3.940	61.427
9	11:48:00	1.10	1.80	125.750	104	80	78	1.049	3.910	61.427
9	11:53:00	1.20	2.00	129.660	104	81	78	1.095	4.060	64.159
10	11:58:00	1.40	2.30	133.720	105	82	79	1.183	4.380	69.299
10	12:03:00	1.30	2.20	138.100	105	83	79	1.140	4.279	66.779
	12:08:00			142.379						
11	12:25:00	1.30	2.20	142.379	104	85	85	1.140	4.231	66.779
11	12:30:00	1.20	2.00	146.610	105	86	86	1.095	3.480	64.159
12	12:35:00	1.30	2.20	150.090	104	87	87	1.140	4.940	66.779
12	12:40:00	1.30	2.20	155.030	104	87	87	1.140	4.281	66.779
	12:45:00			159.311						
2-1	12:50:00	1.70	2.80	159.311	104	83	84	1.304	4.889	76.364
1	12:55:00	1.70	2.80	164.200	105	84	83	1.304	4.900	76.364
2	13:00:00	1.60	2.80	169.100	105	85	83	1.265	4.720	74.084
2	13:05:00	1.60	2.70	173.820	105	85	83	1.265	4.690	74.084

© Mostardi Platt

Run 1-Method 23

Client: Northern Metals, LLC
Facility: Pacific Street Yard
Test Location: Common Stack STRU1
Source Condition: Normal

Date: 7/26/17
Start Time: 10:00
End Time: 15:15

DRY GAS METER CONDITIONS

ΔH:	2.11	in. H_2O
Meter Temperature, Tm:	81.5	°F
Sqrt ΔP:	1.119	in. H_2O
Stack Temperature, Ts:	104.0	°F
Meter Volume, Vm:	196.150	ft^3
Meter Volume, Vmstd:	189.952	dscf
Meter Volume, Vwstd:	7.131	wscf
Isokinetic Variance:	100.7	%I
Test Length	240.00	in mins.
Nozzle Diameter	0.202	in inches
Barometric Pressure	29.77	in Hg

STACK CONDITIONS

Static Pressure	0.60	in. H_2O
Flue Pressure (Ps):	29.81	in. Hg. abs.
Carbon Dioxide:	0.00	%
Oxygen:	20.80	%
Nitrogen:	79.20	%
Gas Weight dry, Md:	28.832	lb/lb mole
Gas Weight wet, Ms:	28.440	lb/lb mole
Excess Air:	---	%
Gas Velocity, Vs:	65.512	fps
Volumetric Flow:	103,182	acfm
Volumetric Flow:	92,768	dscfm
Volumetric Flow:	96,250	scfm

MOISTURE DETERMINATION

Initial Impinger Content:	1943.2	ml	Silica Initial Wt.	845.6	grams
Final Impinger Content:	2044.1	ml	Silica Final Wt.	896.1	grams
Impinger Difference:	100.9	ml	Silica Difference:	50.5	grams

Total Water Gain: 151.4 Moisture, Bws: 0.036 **Supersaturation Value, Bws: 0.073**

Port-Point No.	Clock Time	Velocity Head Δp in. H2O	Orifice ΔH in. H2O	Actual Meter Vol. ft^3	Stack Temp °F	Meter Temp Inlet °F	Meter Temp Outlet °F	Sqrt. Δp	Collected Vol. ft^3	Point Vel ft/sec
3	13:10:00	1.50	2.50	178.510	106	85	83	1.225	4.580	71.732
3	13:15:00	1.60	2.70	183.090	106	86	83	1.265	4.710	74.084
4	13:20:00	1.60	2.70	187.800	105	87	84	1.265	4.830	74.084
4	13:25:00	1.50	2.50	192.630	105	87	84	1.225	4.600	71.732
5	13:30:00	1.30	2.20	197.230	105	87	84	1.140	4.270	66.779
5	13:35:00	1.40	2.30	201.500	106	88	84	1.183	4.470	69.299
6	13:40:00	1.20	2.00	205.970	106	88	84	1.095	4.040	64.159
6	13:45:00	1.20	2.00	210.010	106	88	84	1.095	4.180	64.159
7	13:50:00	0.98	1.60	214.190	106	87	84	0.990	3.650	57.980
7	13:55:00	0.96	1.60	217.840	106	88	84	0.980	3.710	57.385
8	14:00:00	1.00	1.70	221.550	106	88	84	1.000	3.769	58.569
	14:05:00			225.319						
8	14:12:00	1.10	1.80	225.319	104	88	84	1.049	3.948	61.427
	14:17:00			229.267						
9	14:35:00	1.00	1.70	229.267	103	83	84	1.000	3.813	58.569
9	14:40:00	1.20	2.00	233.080	104	84	83	1.095	4.100	64.159
10	14:45:00	1.30	2.20	237.180	104	85	83	1.140	4.230	66.779
10	14:50:00	1.30	2.20	241.410	104	85	84	1.140	4.280	66.779
11	14:55:00	1.50	2.50	245.690	104	88	83	1.225	4.520	71.732
11	15:00:00	1.40	2.30	250.210	104	88	84	1.183	4.540	69.299
12	15:05:00	1.50	2.50	254.750	104	87	84	1.225	4.580	71.732
12	15:10:00	1.60	2.70	259.330	104	88	84	1.265	4.748	74.084
	15:15:00			264.078						
Total	3:55:00			196.150		82.5	80.5		196.150	
Average			2.11		104.0	81.5		1.119		
Min			1.60		102.0	73.0		0.980		
Max			2.80		106.0	88.0		1.304		

© Mostardi Platt

Run 2-Method 23

Client: Northern Metals, LLC
Facility: Pacific Street Yard
Test Location: Common Stack STRU1
Source Condition: Normal

Date: 7/27/17
Start Time: 7:20
End Time: 12:27

DRY GAS METER CONDITIONS

ΔH:	2.07	In. H_2O
Meter Temperature, Tm:	80.6	°F
Sqrt ΔP:	1.111	in. H_2O
Stack Temperature, Ts:	100.4	°F
Meter Volume, Vm:	201.139	ft^3
Meter Volume, Vmstd:	190.986	dscf
Meter Volume, Vwstd:	6.575	wscf
Isokinetic Variance:	102.5	%I
Test Length	240.00	in mins.
Nozzle Diameter	0.202	in inches
Barometric Pressure	29.14	in Hg

STACK CONDITIONS

Static Pressure	0.60	in. H_2O
Flue Pressure (Ps):	29.18	in. Hg. abs.
Carbon Dioxide:	0.00	%
Oxygen:	20.80	%
Nitrogen:	79.2	%
Gas Weight dry, Md:	28.832	lb/lb mole
Gas Weight wet, Ms:	28.471	lb/lb mole
Excess Air:	---	%
Gas Velocity, Vs:	65.496	fps
Volumetric Flow:	103,157	acfm
Volumetric Flow:	91,641	dscfm
Volumetric Flow:	94,796	scfm

MOISTURE DETERMINATION

Initial Impinger Content:	1694.9	ml	Silica Initial Wt.	971.0	grams
Final Impinger Content:	1797.6	ml	Silica Final Wt.	1007.9	grams
Impinger Difference:	102.7	ml	Silica Difference:	36.9	grams

Total Water Gain: 139.6 Moisture, Bws: 0.033 **Supersaturation Value, Bws: 0.067**

Port-Point No.	Clock Time	Velocity Head Δp in. H2O	Orifice ΔH in. H2O	Actual Meter Vol. ft^3	Stack Temp °F	Meter Temp Inlet °F	Meter Temp Outlet °F	Sqrt. Δp	Collected Vol. ft^3	Point Vel ft/sec
1-1	7:20:00	1.80	3.00	64.770	95	66	68	1.342	4.980	79.125
1	7:25:00	1.70	2.80	69.750	95	68	68	1.304	4.770	76.896
2	7:30:00	1.60	2.60	74.520	95	68	68	1.265	4.770	74.600
2	7:35:00	1.70	2.80	79.290	95	70	69	1.304	4.810	76.896
3	7:40:00	1.40	2.30	84.100	95	70	69	1.183	4.400	69.782
3	7:45:00	1.50	2.50	88.500	96	71	69	1.225	4.500	72.231
4	7:50:00	1.50	2.50	93.000	97	71	68	1.225	4.620	72.231
4	7:55:00	1.40	2.30	97.620	97	70	69	1.183	4.389	69.782
	8:00:00			102.009						
5	8:40:00	1.20	2.00	102.009	95	73	70	1.095	4.091	64.606
5	8:45:00	1.30	2.20	106.100	96	74	71	1.140	4.270	67.244
6	8:50:00	1.20	2.00	110.370	96	74	71	1.095	4.070	64.606
6	8:55:00	1.20	2.00	114.440	97	75	71	1.095	4.140	64.606
7	9:00:00	0.99	1.60	118.580	97	78	73	0.995	3.650	58.681
7	9:05:00	0.99	1.60	122.230	98	79	73	0.995	3.770	58.681
8	9:10:00	0.98	1.60	126.000	99	79	74	0.990	3.770	58.384
8	9:15:00	1.00	1.70	129.770	100	80	75	1.000	3.660	58.977
9	9:20:00	0.97	1.60	133.430	100	80	75	0.985	3.770	58.085
9	9:25:00	1.00	1.70	137.200	102	81	76	1.000	3.710	58.977
10	9:30:00	1.30	2.20	140.910	101	82	77	1.140	4.380	67.244
10	9:35:00	1.20	2.00	145.290	102	82	79	1.095	4.040	64.606
11	9:40:00	1.20	2.00	149.330	102	82	80	1.095	4.170	64.606
11	9:45:00	1.30	2.20	153.500	103	83	80	1.140	4.250	67.244
12	9:50:00	1.30	2.20	157.750	103	84	81	1.140	4.350	67.244
12	9:55:00	1.20	2.00	162.100	103	85	81	1.095	4.149	64.606
	10:00:00			166.249						
2-1	10:05:00	1.50	2.50	166.249	104	84	81	1.225	4.621	72.231
1	10:10:00	1.40	2.30	170.870	102	84	81	1.183	4.450	69.782
2	10:15:00	1.20	2.00	175.320	100	84	82	1.095	4.200	64.606
2	10:20:00	1.30	2.20	179.520	101	85	82	1.140	4.360	67.244
3	10:25:00	1.20	2.00	183.880	102	85	83	1.095	4.060	64.606

© Mostardi Platt

Run 2-Method 23

Client: Northern Metals, LLC
Facility: Pacific Street Yard
Test Location: Common Stack STRU1
Source Condition: Normal

Date: 7/27/17
Start Time: 7:20
End Time: 12:27

DRY GAS METER CONDITIONS

ΔH:	2.07	in. H_2O
Meter Temperature, Tm:	80.6	°F
Sqrt ΔP:	1.111	in. H_2O
Stack Temperature, Ts:	100.4	°F
Meter Volume, Vm:	201.139	ft^3
Meter Volume, Vmstd:	190.986	dscf
Meter Volume, Vwstd:	6.575	wscf
Isokinetic Variance:	102.5	%I
Test Length	240.00	in mins.
Nozzle Diameter	0.202	in inches
Barometric Pressure	29.14	in Hg

STACK CONDITIONS

Static Pressure	0.60	in. H_2O
Flue Pressure (Ps):	29.18	in. Hg. abs.
Carbon Dioxide:	0.00	%
Oxygen:	20.80	%
Nitrogen:	79.2	%
Gas Weight dry, Md:	28.832	lb/lb mole
Gas Weight wet, Ms:	28.471	lb/lb mole
Excess Air:	---	%
Gas Velocity, Vs:	65.496	fps
Volumetric Flow:	103,157	acfm
Volumetric Flow:	91,641	dscfm
Volumetric Flow:	94,796	scfm

MOISTURE DETERMINATION

Initial Impinger Content:	1694.9	ml	Silica Initial Wt.	971.0	grams
Final Impinger Content:	1797.6	ml	Silica Final Wt.	1007.9	grams
Impinger Difference:	102.7	ml	Silica Difference:	36.9	grams

Total Water Gain: 139.6 Moisture, Bws: 0.033 **Supersaturation Value, Bws: 0.067**

Port-Point No.	Clock Time	Velocity Head Δp in. H2O	Orifice ΔH in. H2O	Actual Meter Vol. ft^3	Stack Temp °F	Meter Temp Inlet °F	Meter Temp Outlet °F	Sqrt. Δp	Collected Vol. ft^3	Point Vel ft/sec
3	10:30:00	1.20	2.00	187.940	103	86	83	1.095	4.220	64.606
4	10:35:00	1.40	2.30	192.160	102	85	83	1.183	4.520	69.782
4	10:40:00	1.30	2.20	196.680	102	85	84	1.140	4.180	67.244
5	10:45:00	1.10	1.80	200.860	102	86	85	1.049	4.050	61.855
5	10:50:00	1.30	2.20	204.910	102	87	85	1.140	4.420	67.244
6	10:55:00	1.20	2.00	209.330	102	88	86	1.095	4.170	64.606
6	11:00:00	1.00	1.70	213.500	103	88	86	1.000	3.500	58.977
7	11:05:00	1.30	2.20	217.000	104	88	86	1.140	4.610	67.244
7	11:10:00	1.30	2.20	221.610	105	87	87	1.140	4.310	67.244
8	11:15:00	1.20	2.00	225.920	105	89	87	1.095	4.270	64.606
8	11:20:00	1.30	2.20	230.190	105	89	87	1.140	4.319	67.244
	11:25:00			234.509						
9	11:40:00	1.20	2.00	234.509	104	90	87	1.095	4.101	64.606
	11:45:00			238.610						
9	11:52:00	1.10	1.90	238.610	102	89	88	1.049	3.990	61.855
10	11:57:00	1.00	1.70	242.600	102	90	89	1.000	3.890	58.977
10	12:02:00	0.97	1.60	246.490	102	90	88	0.985	3.730	58.085
11	12:07:00	0.99	1.70	250.220	102	91	88	0.995	3.830	58.681
11	12:12:00	1.00	1.70	254.050	102	91	89	1.000	3.830	58.977
12	12:17:00	1.20	2.00	257.880	102	91	89	1.095	4.170	64.606
12	12:22:00	1.00	1.70	262.050	102	90	89	1.000	3.859	58.977
	12:27:00			265.909						
Total	4:00:00			201.139		81.8	79.4		201.139	
Average			2.07		100.4	80.6		1.111		
Min			1.60		95.0	66.0		0.985		
Max			3.00		105.0	91.0		1.342		

© Mostardi Platt

Run 3-Method 23

Client: Northern Metals, LLC
Facility: Pacific Street Yard
Test Location: Common Stack STRU1
Source Condition: Normal

Date: 7/27/17
Start Time: 12:55
End Time: 15:28

DRY GAS METER CONDITIONS

ΔH:	2.07	In. H_2O
Meter Temperature, Tm:	91.9	°F
Sqrt ΔP:	1.098	In. H_2O
Stack Temperature, Ts:	102.0	°F
Meter Volume, Vm:	109.898	ft^3
Meter Volume, Vmstd:	102.219	dscf
Meter Volume, Vwstd:	3.956	wscf
Isokinetic Variance:	102.9	%I
Test Length	130.00	in mins.
Nozzle Diameter	0.202	in inches
Barometric Pressure	29.14	in Hg

STACK CONDITIONS

Static Pressure	0.60	in. H_2O
Flue Pressure (Ps):	29.18	in. Hg. abs.
Carbon Dioxide:	0.00	%
Oxygen:	20.90	%
Nitrogen:	79.1	%
Gas Weight dry, Md:	28.836	lb/lb mole
Gas Weight wet, Ms:	28.432	lb/lb mole
Excess Air:	---	%
Gas Velocity, Vs:	64.892	fps
Volumetric Flow:	102,207	acfm
Volumetric Flow:	90,177	dscfm
Volumetric Flow:	93,668	scfm

MOISTURE DETERMINATION

Initial Impinger Content:	1722.1	ml	Silica Initial Wt.	999.4	grams
Final Impinger Content:	1797.6	ml	Silica Final Wt.	1007.9	grams
Impinger Difference:	75.5	ml	Silica Difference:	8.5	grams

Total Water Gain: 84.0 Moisture, Bws: 0.037 **Supersaturation Value, Bws:** 0.070

Port-Point No.	Clock Time	Velocity Head Δp In. H2O	Orifice ΔH In. H2O	Actual Meter Vol. ft^3	Stack Temp °F	Meter Temp Inlet °F	Meter Temp Outlet °F	Sqrt. Δp	Collected Vol. ft^3	Point Vel ft/sec
1-1	12:55:00	1.70	2.90	67.333	100	90	90	1.304	4.997	77.054
1	13:00:00	1.80	3.10	72.330	100	90	90	1.342	5.170	79.288
2	13:05:00	1.60	2.70	77.500	100	92	90	1.265	4.820	74.753
2	13:10:00	1.70	2.90	82.320	100	92	90	1.304	5.110	77.054
3	13:15:00	1.50	2.60	87.430	100	90	90	1.225	4.670	72.379
3	13:20:00	1.50	2.60	92.100	101	92	90	1.225	4.710	72.379
4	13:25:00	1.30	2.20	96.810	102	93	91	1.140	4.390	67.382
4	13:30:00	1.30	2.20	101.200	103	93	90	1.140	4.380	67.382
5	13:35:00	1.30	2.20	105.580	102	94	91	1.140	4.420	67.382
5	13:40:00	1.20	2.00	110.000	103	95	91	1.095	4.150	64.738
6	13:45:00	1.00	1.70	114.150	102	95	91	1.000	3.940	59.098
6	13:50:00	1.00	1.70	118.090	102	95	92	1.000	3.860	59.098
7	13:55:00	0.98	1.70	121.950	101	95	91	0.990	3.820	58.504
7	14:00:00	0.99	1.70	125.770	100	94	91	0.995	3.820	58.801
8	14:05:00	0.96	1.60	129.590	103	94	90	0.980	3.730	57.904
8	14:10:00	0.98	1.70	133.320	104	94	90	0.990	3.820	58.504
9	14:15:00	0.97	1.70	137.140	103	95	91	0.985	3.830	58.204
9	14:20:00	0.99	1.70	140.970	104	95	90	0.995	3.810	58.801
10	14:25:00	1.00	1.70	144.780	105	95	90	1.000	3.850	59.098
10	14:30:00	0.98	1.70	148.630	105	95	91	0.990	3.805	58.504
	14:35:00			152.435						
11	14:55:00	0.98	1.70	152.435	102	92	90	0.990	3.805	58.504
11	15:00:00	0.99	1.70	156.240	102	92	91	0.995	3.850	58.801
12	15:05:00	1.00	1.70	160.090	102	94	90	1.000	3.860	59.098
12	15:10:00	1.20	1.70	163.950	102	94	90	1.095	4.182	64.738
	15:15:00			168.132						
2.1	15:18:00	1.50	2.60	168.132	102	94	90	1.225	4.748	72.379
1	15:23:00	1.30	2.20	172.880	101	93	89	1.140	4.351	67.382
	15:28:00			177.231						
Total	2:10:00			109.898		93.3	90.4		109.898	
Average			2.07		102.0	91.9		1.098		
Min			1.60		100.0	89.0		0.980		
Max			3.10		105.0	95.0		1.342		

© Mostardi Platt

Run 4-Method 23

Client: Northern Metals, LLC
Facility: Pacific Street Yard
Test Location: Common Stack STRU1
Source Condition: Normal

Date: 8/1/17
Start Time: 9:35
End Time: 13:44

DRY GAS METER CONDITIONS

ΔH:	2.27	in. H_2O
Meter Temperature, Tm:	85.1	°F
Sqrt ΔP:	1.140	in. H_2O
Stack Temperature, Ts:	102.4	°F
Meter Volume, Vm:	207.376	ft^3
Meter Volume, Vmstd:	195.836	dscf
Meter Volume, Vwstd:	5.741	wscf
Isokinetic Variance:	102.0	%I
Test Length	240.00	in mins.
Nozzle Diameter	0.202	in inches
Barometric Pressure	29.21	in Hg

STACK CONDITIONS

Static Pressure	0.60	in. H_2O
Flue Pressure (Ps):	29.25	in. Hg. abs.
Carbon Dioxide:	0.00	%
Oxygen:	20.80	%
Nitrogen:	79.2	%
Gas Weight dry, Md:	28.832	lb/lb mole
Gas Weight wet, Ms:	28.523	lb/lb mole
Excess Air:	---	%
Gas Velocity, Vs:	67.213	fps
Volumetric Flow:	105,862	acfm
Volumetric Flow:	94,415	dscfm
Volumetric Flow:	97,183	scfm

MOISTURE DETERMINATION

Initial Impinger Content:	1694.3	ml	Silica Initial Wt.	969.1	grams
Final Impinger Content:	1777.2	ml	Silica Final Wt.	1008.1	grams
Impinger Difference:	82.9	ml	Silica Difference:	39.0	grams

Total Water Gain: 121.9 Moisture, Bws: 0.028 **Supersaturation Value, Bws: 0.071**

Port-Point No.	Clock Time	Velocity Head Δp in. H2O	Orifice ΔH in. H2O	Actual Meter Vol. ft^3	Stack Temp °F	Meter Temp Inlet °F	Meter Temp Outlet °F	Sqrt. Δp	Collected Vol. ft^3	Point Vel ft/sec
1-1	9:35:00	1.70	2.90	74.089	93	77	77	1.304	5.331	76.865
1-1	9:40:00	1.50	2.60	79.420	94	77	77	1.225	4.510	72.202
1-2	9:45:00	1.40	2.40	83.930	94	79	77	1.183	4.340	69.754
1-2	9:50:00	1.40	2.40	88.270	94	80	77	1.183	4.270	69.754
1-3	9:55:00	1.20	2.10	92.540	95	81	78	1.095	4.140	64.580
1-3	10:00:00	1.20	2.10	96.680	95	82	79	1.095	5.190	64.580
1-4	10:05:00	1.20	2.10	101.870	96	83	80	1.095	3.190	64.580
1-4	10:10:00	1.10	1.90	105.060	96	84	80	1.049	3.960	61.830
1-5	10:15:00	1.20	2.10	109.020	97	84	80	1.095	4.030	64.580
1-5	10:20:00	1.20	2.10	113.050	97	85	81	1.095	4.380	64.580
1-6	10:25:00	1.40	2.40	117.430	98	85	81	1.183	4.490	69.754
1-6	10:30:00	1.20	2.10	121.920	99	86	82	1.095	3.940	64.580
1-7	10:35:00	1.30	2.20	125.860	100	86	82	1.140	4.550	67.217
1-7	10:40:00	1.30	2.20	130.410	100	88	83	1.140	4.110	67.217
1-8	10:45:00	1.20	2.10	134.520	100	88	83	1.095	4.150	64.580
1-8	10:50:00	1.30	2.20	138.670	101	89	85	1.140	4.320	67.217
1-9	10:55:00	1.10	1.90	142.990	101	89	85	1.049	3.970	61.830
1-9	11:00:00	1.10	1.90	146.960	101	89	85	1.049	3.850	61.830
1-10	11:05:00	1.20	2.10	150.810	101	89	85	1.095	4.120	64.580
1-10	11:10:00	1.50	2.60	154.930	101	90	86	1.225	4.710	72.202
1-11	11:15:00	1.50	2.60	159.640	101	90	86	1.225	4.390	72.202
1-11	11:20:00	1.40	2.40	164.030	101	90	86	1.183	4.770	69.754
1-12	11:25:00	1.50	2.60	168.800	102	90	87	1.225	4.640	72.202
1-12	11:30:00	1.50	2.60	173.440	102	90	87	1.225	4.429	72.202
	11:35:00			177.869						
2-1	11:44:00	1.80	3.10	177.869	102	87	87	1.342	5.021	79.094
2-1	11:49:00	1.90	3.30	182.890	103	89	87	1.378	5.420	81.261
2-2	11:54:00	1.80	3.10	188.310	104	89	87	1.342	4.900	79.094
2-2	11:59:00	2.00	3.40	193.210	104	89	87	1.414	5.590	83.372
2-3	12:04:00	1.80	3.10	198.800	104	88	86	1.342	4.420	79.094
2-3	12:09:00	1.90	3.30	203.220	104	88	86	1.378	5.640	81.261

© Mostardi Platt

Run 4-Method 23

Client: Northern Metals, LLC
Facility: Pacific Street Yard
Test Location: Common Stack STRU1
Source Condition: Normal

Date: 8/1/17
Start Time: 9:35
End Time: 13:44

DRY GAS METER CONDITIONS			STACK CONDITIONS		
ΔH:	2.27	In. H_2O	Static Pressure	0.60	in. H_2O
Meter Temperature, Tm:	85.1	°F	Flue Pressure (Ps):	29.25	in. Hg. abs.
Sqrt ΔP:	1.140	In. H_2O	Carbon Dioxide:	0.00	%
Stack Temperature, Ts:	102.4	°F	Oxygen:	20.80	%
Meter Volume, Vm:	207.376	ft^3	Nitrogen:	79.2	%
Meter Volume, Vmstd:	195.836	dscf	Gas Weight dry, Md:	28.832	lb/lb mole
Meter Volume, Vwstd:	5.741	wscf	Gas Weight wet, Ms:	28.523	lb/lb mole
Isokinetic Variance:	102.0	%I	Excess Air:	---	%
			Gas Velocity, Vs:	67.213	fps
Test Length	240.00	in mins.	Volumetric Flow:	105,862	acfm
Nozzle Diameter	0.202	in inches	Volumetric Flow:	94,415	dscfm
Barometric Pressure	29.21	in Hg	Volumetric Flow:	97,183	scfm

MOISTURE DETERMINATION

Initial Impinger Content:	1694.3	ml	Silica Initial Wt.	969.1	grams
Final Impinger Content:	1777.2	ml	Silica Final Wt.	1008.1	grams
Impinger Difference:	82.9	ml	Silica Difference:	39.0	grams

Total Water Gain: 121.9 Moisture, Bws: 0.028 **Supersaturation Value, Bws: 0.071**

Port-Point No.	Clock Time	Velocity Head Δp in. H2O	Orifice ΔH in. H2O	Actual Meter Vol. ft^3	Stack Temp °F	Meter Temp Inlet °F	Meter Temp Outlet °F	Sqrt. Δp	Collected Vol. ft^3	Point Vel ft/sec
2-4	12:14:00	1.80	3.10	208.860	103	91	86	1.342	5.110	79.094
2-4	12:19:00	1.50	2.60	213.970	105	91	87	1.225	4.940	72.202
2-5	12:24:00	1.20	2.10	218.910	106	91	87	1.095	4.130	64.580
2-5	12:29:00	1.20	2.10	223.040	108	88	85	1.095	4.260	64.580
2-6	12:34:00	1.10	1.90	227.300	109	86	84	1.049	3.960	61.830
2-6	12:39:00	1.10	1.90	231.260	108	86	85	1.049	3.960	61.830
2-7	12:44:00	1.20	2.10	235.220	107	86	84	1.095	4.060	64.580
2-7	12:49:00	1.00	1.70	239.280	107	86	84	1.000	3.950	58.953
2-8	12:54:00	1.10	1.90	243.230	107	86	84	1.049	3.840	61.830
2-8	12:59:00	1.10	1.90	247.070	109	85	83	1.049	4.050	61.830
2-9	13:04:00	1.00	1.70	251.120	107	85	83	1.000	3.860	58.953
2-9	13:09:00	1.00	1.70	254.980	108	85	83	1.000	3.680	58.953
2-10	13:14:00	1.20	2.10	258.660	108	86	84	1.095	4.150	64.580
2-10	13:19:00	1.10	1.90	262.810	108	86	84	1.049	3.980	61.830
2-11	13:24:00	0.95	1.60	266.790	108	87	85	0.975	4.010	57.460
2-11	13:29:00	0.95	1.60	270.800	108	88	86	0.975	3.580	57.460
2-12	13:34:00	0.90	1.50	274.380	108	89	87	0.949	3.270	55.928
2-12	13:39:00	0.90	1.50	277.650	109	91	87	0.949	3.815	55.928
	13:44:00			281.465						
Total	4:00:00			207.376		86.5	83.7		207.376	
Average			2.27		102.4	85.1		1.140		
Min			1.50		93.0	77.0		0.949		
Max			3.40		109.0	91.0		1.414		

© Mostardi Platt

Northern Metals, LLC Pacific Street Yard Facility Common Stack STRU1 Gaseous Summary								
Test No.	Date	Start Time	End Time	NMHC ppm as C_3H_8 (wet)	CH_4 ppm as CH_4 (wet)	Moisture, %	Flowrate, SCFM	VOC as C_3H_8 lb/hr
1	08/02/17	08:20	09:19	44.1	2.8	2.8	100,136	30.26
2	08/02/17	09:45	10:44	71.8	3.3	2.7	98,495	48.46
3	08/02/17	11:10	12:09	59.0	2.9	2.7	98,764	39.93
Average				58.3	3.0	2.7	99,132	39.55

© Mostardi Platt

Client: Northern Metals, LLC
Facility: Pacific Street Yard Facility
Project #: M173006
Test Location: Common Stack STRU1
Operating Condition: Normal
Date: 8/2/17
Run 1

Time	CH4 ppmv	NMHC ppmv
8:20	3.10	24.40
8:21	2.90	46.10
8:22	2.90	34.70
8:23	2.90	33.40
8:24	2.90	17.80
8:25	3.10	16.70
8:26	2.70	23.00
8:27	2.90	90.30
8:28	3.00	52.80
8:29	3.10	55.80
8:30	3.00	34.50
8:31	2.90	26.10
8:32	2.90	26.90
8:33	2.90	28.90
8:34	2.90	23.00
8:35	2.90	19.20
8:36	3.00	23.40
8:37	4.20	26.10
8:38	4.10	23.70
8:39	3.20	20.70
8:40	3.00	19.10
8:41	2.80	18.00
8:42	2.90	15.30
8:43	2.80	13.50
8:44	2.70	15.60
8:45	2.70	17.10
8:46	2.60	23.20
8:47	2.50	31.80
8:48	2.40	22.40
8:49	2.30	12.10
8:50	2.30	11.60
8:51	2.50	22.10
8:52	2.70	30.00
8:53	2.50	23.70
8:54	2.40	28.90
8:55	2.30	10.20
8:56	2.30	9.30
8:57	2.40	44.20
8:58	2.50	73.10
8:59	2.70	73.70
9:00	2.70	70.60
9:01	2.50	41.50
9:02	2.50	35.40
9:03	2.40	38.70
9:04	2.50	57.70
9:05	2.50	59.80
9:06	2.60	148.30
9:07	2.70	125.40
9:08	2.80	52.00
9:09	2.70	53.50
9:10	2.70	50.70
9:11	2.90	82.30
9:12	2.90	95.70
9:13	2.70	38.30
9:14	2.80	84.00
9:15	2.80	122.20
9:16	2.90	75.00
9:17	3.00	67.00
9:18	3.40	64.10
9:19	2.90	119.40
Average	**2.80**	**44.10**
Min	2.30	9.30
Max	4.20	148.30

© Mostardi Platt

Client: Northern Metals, LLC
Facility: Pacific Street Yard Facility
Project #: M173006
Test Location: Common Stack STRU1
Operating Condition: Normal
Date: 42949
Run 2

Time	CH4 ppmv	NMHC ppmv
9:45	2.70	52.60
9:46	2.80	74.10
9:47	2.90	52.00
9:48	2.80	42.20
9:49	3.40	70.50
9:50	5.40	85.10
9:51	3.20	67.70
9:52	2.90	49.10
9:53	2.90	59.40
9:54	2.80	69.90
9:55	2.80	78.00
9:56	2.50	57.00
9:57	2.90	61.00
9:58	3.10	36.80
9:59	2.80	32.90
10:00	3.20	73.10
10:01	3.60	65.30
10:02	2.90	57.70
10:03	3.30	79.50
10:04	3.30	72.80
10:05	3.50	67.70
10:06	3.90	50.70
10:07	3.40	41.40
10:08	3.50	61.70
10:09	3.20	71.50
10:10	2.70	87.90
10:11	3.10	101.50
10:12	3.10	81.70
10:13	3.30	63.10
10:14	3.60	69.90
10:15	3.30	72.20
10:16	3.20	90.20
10:17	3.30	124.20
10:18	3.20	81.70
10:19	3.10	61.00
10:20	3.00	50.20
10:21	3.20	63.40
10:22	3.00	55.00
10:23	3.30	57.20
10:24	3.30	63.50
10:25	2.80	136.30
10:26	3.30	55.80
10:27	8.50	56.30
10:28	3.70	108.50
10:29	2.80	41.70
10:30	3.30	79.70
10:31	3.20	42.90
10:32	3.20	53.20
10:33	3.50	46.80
10:34	3.60	47.50
10:35	3.40	68.80
10:36	3.20	87.80
10:37	2.90	69.70
10:38	3.00	117.30
10:39	3.00	93.40
10:40	3.30	68.40
10:41	3.20	131.00
10:42	3.10	156.70
10:43	3.30	106.80
10:44	3.20	89.70
Average	**3.30**	**71.80**
Min	2.50	32.90
Max	8.50	156.70

© Mostardi Platt

Client: Northern Metals, LLC
Facility: Pacific Street Yard Facility
Project #: M173006
Test Location: Common Stack STRU1
Operating Condition: Normal
Date: 8/2/17
Run 3

Time	CH4 ppmv	NMHC ppmv
11:10	3.10	55.70
11:11	3.20	81.80
11:12	3.20	98.70
11:13	3.00	78.20
11:14	3.00	78.00
11:15	3.10	76.90
11:16	3.00	109.00
11:17	2.90	161.30
11:18	2.90	124.80
11:19	2.70	75.90
11:20	2.60	40.40
11:21	2.70	58.40
11:22	2.90	95.60
11:23	2.90	49.50
11:24	2.80	54.90
11:25	3.10	87.80
11:26	2.90	38.70
11:27	2.80	43.30
11:28	2.90	49.60
11:29	3.10	47.10
11:30	2.80	50.50
11:31	2.60	32.80
11:32	2.70	56.50
11:33	2.80	55.60
11:34	3.10	65.00
11:35	3.30	132.00
11:36	2.90	100.40
11:37	2.80	65.10
11:38	3.00	75.40
11:39	2.80	48.70
11:40	2.60	41.30
11:41	2.60	79.00
11:42	2.60	61.60
11:43	2.60	87.60
11:44	3.30	103.10
11:45	3.30	75.60
11:46	2.90	64.90
11:47	3.20	56.80
11:48	3.20	52.90
11:49	4.30	54.20
11:50	5.80	70.30
11:51	2.70	47.60
11:52	2.80	52.10
11:53	2.80	41.80
11:54	2.80	39.00
11:55	2.80	37.60
11:56	2.60	32.30
11:57	2.90	23.00
11:58	2.90	21.00
11:59	2.80	22.10
12:00	2.70	54.10
12:01	2.70	51.50
12:02	2.90	35.80
12:03	2.70	18.90
12:04	2.80	40.80
12:05	2.90	20.00
12:06	2.60	15.20
12:07	2.60	15.90
12:08	2.70	21.70
12:09	2.40	15.90
Average	**2.90**	**59.00**
Min	2.40	15.20
Max	5.80	161.30

© Mostardi Platt

Client:	Northern Metals, LLC	
Facility:	Pacific Street Yard Facility	
Test Location:	Common Stack STRU1	
Project #:	M173006	
Test Method:	2 (Compliance)	
Test Engineer:	AJH	
Test Technician:	AJ1	
Temp ID:	cm11	
Meter ID:	cm11	
Pitot ID:	018A	
Pitot Type:	S-Type	
Pitot Tube Coefficient:	0.840	
Probe Length:	7.0	**ft**
Sample Plane:	Horizontal	
Port Length:	6.50	**in.**
Port Size (diameter):	6.50	**in.**
Port Type:	Flange	
Duct Shape:	Circular	
Diameter:	5.78125	**ft**
Duct Area:	26.25	**Sq. Ft.**
Upstream Diameters:	0.500	
Downstream Diameters:	2.000	
Number of Ports Sampled:	2	
Number of Points per Port:	8	
Total Number of Traverse Points:	16	
Operating Level:	Normal	
Servomex Serial Number:	ECOM #3	
Moisture Balance ID:	S10-30	

© Mostardi Platt

Northern Metals, LLC
Pacific Street Yard Facility
Common Stack STRU1
Volumetric Flow Data - Normal Load

Test Run	Test Date	Pre Flow SCFH	Post Flow SCFH	Average Reference Method Flow SCFH
Pre 1/Post 1	08/02/17	6,049,937	5,966,352	6,008,144
Pre 2/Post 2	08/02/17	5,966,352	5,853,088	5,909,720
Pre 3/Post 3	08/02/17	5,853,088	5,998,554	5,925,821

Test Run	Test Date	Pre Flow SCFM	Post Flow SCFM	Average Reference Method Flow SCFM
Pre 1/Post 1	08/02/17	100,832	99,439	100,136
Pre 2/Post 2	08/02/17	99,439	97,551	98,495
Pre 3/Post 3	08/02/17	97,551	99,976	98,764

© Mostardi Platt

METHOD 2 VOLUMETRIC FLOW DATA

Project Number:	M173006	**Operating Level:**	Normal		
Client:	Northern Metals, LLC	**Run No.:**	Pre 1		
Facility:	Pacific Street Yard Facility	**Test Date:**	8/2/2017		
Test Location:	Common Stack STRU1	**Start Time:**	8:02		
Pitot ID:	018A	**End Time:**	8:08		
Pitot Coefficient:	0.840	**Test Engineer:**	AJH	**Test Tech:**	AJ1
Probe Length, Feet:	7	**Port Length, Inches:**	7		

Port	Point	DP (in. H_2O)	Sqrt. DP	Temp (°F)	Velocity (V)	Port	Point	DP (in. H_2O)	Sqrt. DP	Temp (°F)	Velocity (V)
1	1	1.80	1.3416	90.0	78.21	2	1	2.00	1.4142	91.0	82.52
1	2	1.50	1.2247	90.0	71.40	2	2	1.90	1.3784	91.0	80.43
1	3	1.20	1.0954	90.0	63.86	2	3	1.60	1.2649	92.0	73.87
1	4	1.10	1.0488	91.0	61.20	2	4	1.50	1.2247	92.0	71.53
1	5	1.40	1.1832	91.0	69.04	2	5	0.90	0.9487	92.0	55.40
1	6	1.50	1.2247	92.0	71.53	2	6	0.95	0.9747	93.0	56.97
1	7	1.50	1.2247	92.0	71.53	2	7	1.10	1.0488	92.0	61.25
1	8	1.50	1.2247	92.0	71.53	2	8	0.85	0.9220	92.0	53.84

Test Parameters

P_{bar} - Barometric pressure, inches Hg	29.21	% CO_2	0.00
P_g - Stack Pressure, inches of H_2O	0.60	% O_2	20.82
P_s - Absolute stack pressure, inches Hg	29.25	% N_2	79.18
t_s - Average stack temperature, °F	91.4	Md - dry basis lb/lb mole	28.83
Duct Shape:	Circular	Ms - wet basis lb/lb mole	28.529
Diameter, Feet	5.78125		
		Bws - Moisture content fraction	**0.028**
Cross Sectional Area of Stack, Ft^2	26.25	Moisture determined by wb/db?	N
		Supersaturation Value, Bws:	**0.051**

Method 2 Results

Average DP	1.3938	Q - ACFM	107,705
Average Sqrt DP	1.1715	Qsd - DSCFM	98,009
Average Velocity Vs (ft/sec)	68.384	Qs - SCFM	100,832
		Qs - SCFH	6,049,937

© Mostardi Platt

METHOD 2 VOLUMETRIC FLOW DATA

Project Number:	M173006	**Operating Level:**	Normal		
Client:	Northern Metals, LLC	**Run No.:**	Post 1/Pre 2		
Facility:	Pacific Street Yard Facility	**Test Date:**	8/2/2017		
Test Location:	Common Stack STRU1	**Start Time:**	9:21		
Pitot ID:	018A	**End Time:**	9:27		
Pitot Coefficient:	0.840	**Test Engineer:**	AJH	**Test Tech:**	AJ1
Probe Length, Feet:	7	**Port Length, Inches:**	7		

Port	Point	DP (in. H_2O)	Sqrt. DP	Temp (°F)	Velocity (V)	Port	Point	DP (in. H_2O)	Sqrt. DP	Temp (°F)	Velocity (V)
1	1	1.80	1.3416	92.0	78.35	2	1	1.90	1.3784	93.0	80.57
1	2	1.40	1.1832	93.0	69.16	2	2	2.00	1.4142	93.0	82.67
1	3	1.20	1.0954	94.0	64.09	2	3	1.70	1.3038	94.0	76.28
1	4	1.05	1.0247	95.0	60.01	2	4	1.50	1.2247	94.0	71.66
1	5	1.30	1.1402	96.0	66.83	2	5	1.00	1.0000	94.0	58.51
1	6	1.40	1.1832	96.0	69.35	2	6	0.95	0.9747	95.0	57.08
1	7	1.50	1.2247	96.0	71.79	2	7	1.10	1.0488	96.0	61.47
1	8	1.00	1.0000	96.0	58.61	2	8	1.00	1.0000	96.0	58.61

Test Parameters

P_{bar} - Barometric pressure, inches Hg	29.21	% CO_2	0.00
P_g - Stack Pressure, inches of H_2O	0.60	% O_2	20.82
P_s - Absolute stack pressure, inches Hg	29.25	% N_2	79.18
t_s - Average stack temperature, °F	94.6	Md - dry basis lb/lb mole	28.83
Duct Shape:	Circular	Ms - wet basis lb/lb mole	28.529
Diameter, Feet	5.78125		
		Bws - Moisture content fraction	**0.028**
Cross Sectional Area of Stack, Ft^2	26.25	Moisture determined by wb/db?	N
		Supersaturation Value, Bws:	**0.056**

Method 2 Results

Average DP	1.3625	Q - ACFM	106,819
Average Sqrt DP	1.1586	Qsd - DSCFM	96,655
Average Velocity Vs (ft/sec)	67.822	Qs - SCFM	99,439
		Qs - SCFH	5,966,352

© Mostardi Platt

METHOD 2 VOLUMETRIC FLOW DATA

Project Number:	M173006	**Operating Level:**	Normal		
Client:	Northern Metals, LLC	**Run No.:**	Post 2/Pre 3		
Facility:	Pacific Street Yard Facility	**Test Date:**	8/2/2017		
Test Location:	Common Stack STRU1	**Start Time:**	10:44		
Pitot ID:	018A	**End Time:**	10:50		
Pitot Coefficient:	0.840	**Test Engineer:**	AJH	**Test Tech:**	AJ1
Probe Length, Feet:	7	**Port Length, Inches:**	7		

Port	Point	DP (in. H_2O)	Sqrt. DP	Temp (°F)	Velocity (V)	Port	Point	DP (in. H_2O)	Sqrt. DP	Temp (°F)	Velocity (V)
1	1	1.60	1.2649	91.0	73.79	2	1	1.80	1.3416	98.0	78.76
1	2	1.50	1.2247	92.0	71.51	2	2	1.50	1.2247	98.0	71.90
1	3	1.20	1.0954	93.0	64.02	2	3	1.60	1.2649	99.0	74.33
1	4	1.10	1.0488	95.0	61.41	2	4	1.30	1.1402	99.0	67.00
1	5	1.30	1.1402	98.0	66.94	2	5	0.95	0.9747	99.0	57.27
1	6	1.60	1.2649	99.0	74.33	2	6	0.95	0.9747	99.0	57.27
1	7	1.50	1.2247	100.0	72.03	2	7	1.10	1.0488	99.0	61.63
1	8	1.00	1.0000	99.0	58.76	2	8	1.00	1.0000	98.0	58.71

Test Parameters

P_{bar} - Barometric pressure, inches Hg	29.21	% CO_2	0.00
P_g - Stack Pressure, inches of H_2O	0.60	% O_2	20.82
P_s - Absolute stack pressure, inches Hg	29.25	% N_2	79.18
t_s - Average stack temperature, °F	97.3	Md - dry basis lb/lb mole	28.83
Duct Shape:	Circular	Ms - wet basis lb/lb mole	28.540
Diameter, Feet	5.78125		
		Bws - Moisture content fraction	**0.027**
Cross Sectional Area of Stack, Ft^2	26.25	Moisture determined by wb/db?	N
		Supersaturation Value, Bws:	**0.061**

Method 2 Results

Average DP	1.3125	Q - ACFM	105,299
Average Sqrt DP	1.1396	Qsd - DSCFM	94,918
Average Velocity Vs (ft/sec)	66.857	Qs - SCFM	97,551
		Qs - SCFH	5,853,088

© Mostardi Platt

METHOD 2 VOLUMETRIC FLOW DATA

Project Number:	M173006	**Operating Level:**	Normal		
Client:	Northern Metals, LLC	**Run No.:**	Post 3		
Facility:	Pacific Street Yard Facility	**Test Date:**	8/2/2017		
Test Location:	Common Stack STRU1	**Start Time:**	12:10		
Pitot ID:	018A	**End Time:**	12:16		
Pitot Coefficient:	0.840	**Test Engineer:**	AJH	**Test Tech:**	AJ1
Probe Length, Feet:	7	**Port Length, Inches:**	7		

Port	Point	DP (in. H_2O)	Sqrt. DP	Temp (°F)	Velocity (V)	Port	Point	DP (in. H_2O)	Sqrt. DP	Temp (°F)	Velocity (V)
1	1	1.80	1.3416	98.0	78.76	2	1	2.00	1.4142	98.0	83.02
1	2	1.50	1.2247	98.0	71.90	2	2	2.00	1.4142	98.0	83.02
1	3	1.40	1.1832	99.0	69.53	2	3	1.70	1.3038	99.0	76.61
1	4	1.10	1.0488	99.0	61.63	2	4	1.50	1.2247	99.0	71.97
1	5	1.30	1.1402	100.0	67.06	2	5	1.00	1.0000	99.0	58.76
1	6	1.50	1.2247	100.0	72.03	2	6	1.00	1.0000	99.0	58.76
1	7	1.50	1.2247	100.0	72.03	2	7	1.10	1.0488	99.0	61.63
1	8	1.00	1.0000	100.0	58.81	2	8	0.85	0.9220	99.0	54.17

Test Parameters

P_{bar} - Barometric pressure, inches Hg	29.21	% CO_2	0.00
P_g - Stack Pressure, inches of H_2O	0.60	% O_2	20.82
P_s - Absolute stack pressure, inches Hg	29.25	% N_2	79.18
t_s - Average stack temperature, °F	99.0	Md - dry basis lb/lb mole	28.83
Duct Shape:	Circular	Ms - wet basis lb/lb mole	28.540
Diameter, Feet	5.78125		
		Bws - Moisture content fraction	**0.027**
Cross Sectional Area of Stack, Ft^2	26.25	Moisture determined by wb/db?	N
		Supersaturation Value, Bws:	**0.064**

Method 2 Results

Average DP	1.3906	Q - ACFM	108,255
Average Sqrt DP	1.1697	Qsd - DSCFM	97,277
Average Velocity Vs (ft/sec)	68.733	Qs - SCFM	99,976
		Qs - SCFH	5,998,554

© Mostardi Platt

METHOD 4 MOISTURE DETERMINATION

Project Number:	M173006	**Run Number:**		1	
Client:	Northern Metals, LLC	**Operating Level:**		Normal	
Facility:	Pacific Street Yard Facility	**Time:**	**Start-**	8:20	**End-** 9:20
Test Location:	Common Stack STRU1	**Test Engineer:**		AJH	
Test Date:	8/2/2017	**Test Tech:**		AJ1	

Pressure, Barometric(Hg"):	29.21	**Meter Calibration (Y):**	0.998
Delta H:	1.800	**Meter Delta H (dH):**	1.796
Meter Initial Volume:	8.525	**Initial Wt:**	240.3
Meter Final Volume:	53.525	**Final Wt:**	257.3
Meter Temperature:	66.92	**Initial Volume:**	235.0
Meter Volume dscf:	44.133	**Final Volume:**	245.0

Water Vapor in Flue Gas (Bws): 0.028

Project Number:	M173006	**Run Number:**		2	
Client:	Northern Metals, LLC	**Operating Level:**		Normal	
Facility:	Pacific Street Yard Facility	**Time:**	**Start-**	9:45	**End-** 10:45
Test Location:	Common Stack STRU1	**Test Engineer:**		AJH	
Test Date:	8/2/2017	**Test Tech:**		AJ1	

Pressure, Barometric(Hg"):	29.21	**Meter Calibration (Y):**	0.998
Delta H:	1.800	**Meter Delta H (dH):**	1.796
Meter Initial Volume:	55.000	**Initial Wt:**	245.7
Meter Final Volume:	100.010	**Final Wt:**	253.0
Meter Temperature:	75.54	**Initial Volume:**	200.0
Meter Volume dscf:	43.432	**Final Volume:**	218.0

Water Vapor in Flue Gas (Bws): 0.027

Project Number:	M173006	**Run Number:**		3	
Client:	Northern Metals, LLC	**Operating Level:**		Normal	
Facility:	Pacific Street Yard Facility	**Time:**	**Start-**	11:10	**End-** 12:10
Test Location:	Common Stack STRU1	**Test Engineer:**		AJH	
Test Date:	8/2/2017	**Test Tech:**		AJ1	

Pressure, Barometric(Hg"):	29.21	**Meter Calibration (Y):**	0.998
Delta H:	1.800	**Meter Delta H (dH):**	1.796
Meter Initial Volume:	1.000	**Initial Wt:**	257.3
Meter Final Volume:	46.007	**Final Wt:**	264.5
Meter Temperature:	84.69	**Initial Volume:**	250.0
Meter Volume dscf:	42.700	**Final Volume:**	268.0

Water Vapor in Flue Gas (Bws): 0.027

© Mostardi Platt

Client: Northern Metals
Facility: Pacific Street Yard
Project #: M173006
Test Location: Common Stack STRU1
Operating Condition: Normal
Date: 7/26/17

Run 1

Time	O2 % (dry)	CO2 % (dry)
8:58	20.60	0.00
8:59	20.60	0.00
9:00	20.60	0.00
9:01	20.60	0.00
9:02	20.60	0.00
9:03	20.60	0.00
9:04	20.60	0.00
9:05	20.60	0.00
9:06	20.70	0.00
9:07	20.70	0.00
9:08	20.70	0.00
9:09	20.70	0.00
9:10	20.70	0.00
9:11	20.70	0.00
9:12	20.70	0.00
9:13	20.70	0.00
9:14	20.70	0.00
9:15	20.70	0.00
9:16	20.70	0.00
9:17	20.70	0.00
9:18	20.70	0.00
9:19	20.70	0.00
9:20	20.70	0.00
9:21	20.70	0.00
9:22	20.70	0.00
9:23	20.70	0.00
9:24	20.70	0.00
9:25	20.70	0.00
9:26	20.70	0.00
9:27	20.70	0.00
9:28	20.70	0.00
9:29	20.70	0.00
9:30	20.70	0.00
9:31	20.70	0.00
9:32	20.70	0.00
9:33	20.70	0.00
9:34	20.70	0.00
9:35	20.70	0.00
9:36	20.70	0.00
9:37	20.70	0.00
9:38	20.70	0.00
9:39	20.70	0.00
9:40	20.70	0.00
9:41	20.70	0.00
9:42	20.70	0.00
9:43	20.70	0.00
9:44	20.70	0.00
9:45	20.70	0.00
9:46	20.70	0.00
9:47	20.70	0.00
9:48	20.70	0.00
9:49	20.70	0.00
9:50	20.70	0.00
9:51	20.70	0.00
9:52	20.70	0.00
9:53	20.70	0.00
9:54	20.70	0.00
9:55	20.70	0.00
9:56	20.70	0.00
9:57	20.70	0.00
9:58	20.70	0.00
9:59	20.70	0.00
10:00	20.70	0.00
10:01	20.70	0.00
10:02	20.70	0.00
10:03	20.70	0.00
10:04	20.70	0.00
10:05	20.70	0.00
10:06	20.70	0.00
10:07	20.70	0.00
10:08	20.70	0.00
10:09	20.70	0.00
10:10	20.70	0.00

Run 2

Time	O2 % (dry)	CO2 % (dry)
12:55	20.70	0.00
12:56	20.70	0.00
12:57	20.70	0.00
12:58	20.70	0.00
12:59	20.70	0.00
13:00	20.70	0.00
13:01	20.70	0.00
13:02	20.70	0.00
13:03	20.70	0.00
13:04	20.70	0.00
13:05	20.70	0.00
13:06	20.70	0.00
13:07	20.70	0.00
13:08	20.70	0.00
13:09	20.70	0.00
13:10	20.70	0.00
13:11	20.70	0.00
13:12	20.70	0.00
13:13	20.70	0.00
13:14	20.70	0.00
13:15	20.70	0.00
13:16	20.70	0.00
13:17	20.70	0.00
13:18	20.70	0.00
13:19	20.70	0.00
13:20	20.70	0.00
13:21	20.70	0.00
13:22	20.70	0.00
13:23	20.70	0.00
13:24	20.70	0.00
13:25	20.70	0.00
13:26	20.70	0.00
13:27	20.70	0.00
13:28	20.70	0.00
13:29	20.70	0.00
13:30	20.70	0.00
13:31	20.70	0.00
13:32	20.70	0.00
13:33	20.70	0.00
13:34	20.70	0.00
13:35	20.70	0.00
13:36	20.80	0.00
13:37	20.80	0.00
13:38	20.80	0.00
13:39	20.80	0.00
13:40	20.80	0.00
13:41	20.80	0.00
13:42	20.80	0.00
13:43	20.80	0.00
13:44	20.80	0.00
13:45	20.80	0.00
13:46	20.80	0.00
13:47	20.80	0.00
13:48	20.80	0.00
13:49	20.80	0.00
13:50	20.80	0.00
13:51	20.80	0.00
13:52	20.80	0.00
13:53	20.80	0.00
13:54	20.80	0.00
13:55	20.80	0.00
15:25	20.70	0.00
15:26	20.70	0.00
15:27	20.70	0.00
15:28	20.70	0.00
15:29	20.70	0.00
15:30	20.70	0.00
15:31	20.70	0.00
15:32	20.70	0.00
15:33	20.70	0.00
15:34	20.70	0.00
15:35	20.70	0.00
15:36	20.70	0.00

Run 3

Time	O2 % (dry)	CO2 % (dry)
10:14	21.00	0.00
10:15	21.00	0.00
10:16	21.00	0.00
10:17	21.00	0.00
10:18	21.00	0.00
10:19	21.00	0.00
10:20	21.00	0.00
10:21	21.00	0.00
10:22	21.00	0.00
10:23	21.00	0.00
10:24	21.00	0.00
10:25	21.00	0.00
10:26	21.00	0.00
10:27	21.00	0.00
10:28	21.00	0.00
10:29	21.00	0.00
10:30	21.00	0.00
10:31	21.00	0.00
10:32	21.00	0.00
10:33	21.00	0.00
10:34	21.00	0.00
10:35	21.00	0.00
10:36	21.00	0.00
10:37	21.00	0.00
10:38	21.00	0.00
10:39	21.00	0.00
10:40	21.00	0.00
10:41	21.00	0.00
10:42	21.00	0.00
10:43	21.00	0.00
10:44	21.00	0.00
10:45	21.00	0.00
10:46	21.00	0.00
10:47	21.00	0.00
10:48	21.00	0.00
10:49	21.00	0.00
10:50	21.00	0.00
10:51	21.00	0.00
10:52	21.00	0.00
10:53	21.00	0.00
10:54	21.00	0.00
10:55	21.00	0.00
10:56	21.00	0.00
10:57	21.00	0.00
10:58	21.00	0.00
10:59	21.00	0.00
11:00	21.00	0.00
11:01	21.00	0.00
11:02	21.00	0.00
11:03	21.00	0.00
11:04	21.00	0.00
11:05	21.00	0.00
12:35	21.00	0.00
12:36	21.00	0.00
12:37	21.00	0.00
12:38	21.00	0.00
12:39	21.00	0.00
12:40	21.00	0.00
12:41	21.00	0.00
12:42	21.00	0.00
12:43	21.00	0.00
12:44	21.00	0.00
12:45	21.00	0.00
12:46	21.00	0.00
12:47	21.00	0.00
12:48	21.00	0.00
12:49	21.00	0.00
12:50	21.00	0.00
12:51	21.00	0.00
12:52	21.00	0.00
12:53	21.00	0.00
12:54	21.00	0.00
12:55	21.00	0.00

© Mostardi Platt

Client: Northern Metals
Facility: Pacific Street Yard
Project #: M173006
Test Location: Common Stack STRU1
Operating Condition: Normal
Date: 7/26/17

Run 1

Time	O2 % (dry)	CO2 % (dry)
10:11	20.70	0.00
10:12	20.70	0.00
10:13	20.70	0.00
10:14	20.70	0.00
10:15	20.70	0.00
10:16	20.70	0.00
10:17	20.70	0.00
10:18	20.70	0.00
10:19	20.70	0.00
10:20	20.70	0.00
10:21	20.70	0.00
10:22	20.70	0.00
10:23	20.70	0.00
10:24	20.70	0.00
10:25	20.70	0.00
10:26	20.70	0.00
10:27	20.70	0.00
10:28	20.70	0.00
10:29	20.70	0.00
10:30	20.70	0.00
10:31	20.70	0.00
10:32	20.70	0.00
10:33	20.70	0.00
10:34	20.70	0.00
10:35	20.70	0.00
10:36	20.70	0.00
10:37	20.70	0.00
10:38	20.70	0.00
10:39	20.70	0.00
10:40	20.70	0.00
10:41	20.70	0.00
10:42	20.70	0.00
10:43	20.70	0.00
10:44	20.70	0.00
10:45	20.70	0.00
10:46	20.70	0.00
10:47	20.70	0.00
10:48	20.70	0.00
10:49	20.70	0.00
10:50	20.70	0.00
10:51	20.70	0.00
10:52	20.70	0.00
10:53	20.70	0.00
10:54	20.70	0.00
10:55	20.70	0.00
10:56	20.70	0.00
10:57	20.70	0.00
10:58	20.70	0.00
10:59	20.70	0.00
11:00	20.70	0.00
11:01	20.70	0.00
Average	**20.69**	**0.00**
Min	20.60	0.00
Max	20.70	0.00

Run 2

Time	O2 % (dry)	CO2 % (dry)
15:37	20.70	0.00
15:38	20.70	0.00
15:39	20.70	0.00
15:40	20.80	0.00
15:41	20.80	0.00
15:42	20.80	0.00
15:43	20.80	0.00
15:44	20.80	0.00
15:45	20.80	0.00
15:46	20.80	0.00
15:47	20.80	0.00
15:48	20.80	0.00
15:49	20.80	0.00
15:50	20.80	0.00
15:51	20.80	0.00
15:52	20.80	0.00
15:53	20.80	0.00
15:54	20.80	0.00
15:55	20.80	0.00
15:56	20.80	0.00
15:57	20.80	0.00
15:58	20.80	0.00
15:59	20.80	0.00
16:00	20.80	0.00
16:01	20.80	0.00
16:02	20.90	0.00
16:03	20.90	0.00
16:04	20.90	0.00
16:05	20.90	0.00
16:06	20.90	0.00
16:07	20.90	0.00
16:08	20.90	0.00
16:09	20.90	0.00
16:10	20.90	0.00
Average	20.76	0.00
Min	20.70	0.00
Max	20.90	0.00

Run 3

Time	O2 % (dry)	CO2 % (dry)
12:56	21.00	0.00
12:57	21.00	0.00
12:58	21.00	0.00
12:59	21.00	0.00
13:00	21.00	0.00
13:01	21.00	0.00
13:02	21.00	0.00
13:03	21.00	0.00
13:04	21.00	0.00
13:05	21.00	0.00
13:06	21.00	0.00
13:07	21.00	0.00
13:08	21.00	0.00
13:09	21.00	0.00
13:10	21.00	0.00
13:11	21.00	0.00
13:12	21.00	0.00
13:13	21.00	0.00
13:14	21.00	0.00
13:15	21.00	0.00
13:16	21.00	0.00
13:17	21.00	0.00
13:18	21.00	0.00
13:19	21.00	0.00
13:20	21.00	0.00
13:21	21.00	0.00
13:22	21.00	0.00
13:23	21.00	0.00
13:24	21.00	0.00
13:25	21.00	0.00
13:26	21.00	0.00
Average	**21.00**	**0.00**
Min	21.00	0.00
Max	21.00	0.00

© Mostardi Platt

Client: Northern Metals, LLC
Facility: Pacific Street Yard
Project #: M173006
Test Location: Common Stack
Operating Condition: Normal
Date: 8/1/17

Run 1			Run 2			Run 3		
Time	O2 % (dry)	CO2 % (dry)	Time	O2 % (dry)	CO2 % (dry)	Time	O2 % (dry)	CO2 % (dry)
8:20	20.90	0.00	12:45	21.00	0.00	15:11	21.00	0.00
8:21	20.90	0.00	12:46	21.00	0.00	15:12	21.00	0.00
8:22	20.90	0.00	12:47	21.00	0.00	15:13	21.00	0.00
8:23	20.90	0.00	12:48	21.00	0.00	15:14	21.00	0.00
8:24	20.90	0.00	12:49	21.00	0.00	15:15	21.00	0.00
8:25	20.90	0.00	12:50	21.00	0.00	15:16	21.00	0.00
8:26	20.90	0.00	12:51	21.00	0.00	15:17	21.00	0.00
8:27	20.90	0.00	12:52	21.00	0.00	15:18	21.00	0.00
8:28	20.90	0.00	12:53	21.00	0.00	15:19	21.00	0.00
8:29	20.90	0.00	12:54	21.00	0.00	15:20	21.00	0.00
8:30	20.90	0.00	12:55	20.90	0.00	15:21	21.00	0.00
8:31	20.90	0.00	12:56	20.90	0.00	15:22	21.00	0.00
8:32	20.90	0.00	12:57	20.90	0.00	15:23	21.00	0.00
8:33	20.90	0.00	12:58	20.90	0.00	15:24	21.00	0.00
8:34	20.90	0.00	12:59	20.80	0.00	15:25	21.00	0.00
8:35	20.90	0.00	13:00	20.80	0.00	15:26	21.00	0.00
8:36	20.90	0.00	13:01	20.80	0.00	15:27	21.00	0.00
8:37	20.90	0.00	13:02	20.80	0.00	15:28	21.00	0.00
8:38	20.80	0.00	13:03	20.80	0.00	15:29	21.00	0.00
8:39	20.80	0.00	13:04	20.80	0.00	15:30	21.00	0.00
8:40	20.80	0.00	13:05	20.80	0.00	15:31	21.00	0.00
8:41	20.80	0.00	13:06	20.80	0.00	15:32	21.00	0.00
8:42	20.80	0.00	13:07	20.80	0.00	15:33	21.00	0.00
8:43	20.80	0.00	13:08	20.80	0.00	15:34	21.00	0.00
8:44	20.80	0.00	13:09	20.70	0.00	15:35	21.00	0.00
8:45	20.80	0.00	13:10	20.70	0.00	15:36	21.00	0.00
8:46	20.80	0.00	13:11	20.70	0.00	15:37	21.00	0.00
8:47	20.80	0.00	13:12	20.70	0.00	15:38	21.00	0.00
8:48	20.80	0.00	13:13	20.70	0.00	15:39	21.00	0.00
8:49	20.80	0.00	13:14	20.70	0.00	15:40	21.00	0.00
8:50	20.80	0.00	13:15	20.70	0.00	15:41	21.00	0.00
8:51	20.80	0.00	13:16	20.60	0.00	15:42	21.00	0.00
8:52	20.80	0.00	13:17	20.60	0.00	15:43	21.00	0.00
8:53	20.80	0.00	13:18	20.60	0.00	15:44	20.90	0.00
8:54	20.80	0.00	13:19	20.60	0.00	15:45	21.00	0.00
8:55	20.80	0.00	13:20	20.60	0.00	15:46	20.80	0.00
8:56	20.80	0.00	13:21	20.60	0.00	15:47	20.80	0.00
8:57	20.80	0.00	13:22	20.60	0.00	15:48	20.70	0.00
8:58	20.80	0.00	13:23	20.60	0.00	15:49	20.70	0.00
8:59	20.80	0.00	13:24	20.60	0.00	15:50	20.70	0.00
9:00	20.80	0.00	13:25	20.60	0.00	15:51	20.70	0.00
9:01	20.80	0.00	13:26	20.60	0.00	15:52	20.70	0.00
9:02	20.80	0.00	13:27	20.50	0.00	15:53	20.70	0.00
9:03	20.80	0.00	13:28	20.50	0.00	15:54	20.80	0.00
9:04	20.80	0.00	13:29	20.50	0.00	15:55	20.80	0.00
9:05	20.80	0.00	13:30	20.50	0.00	15:56	20.80	0.00
9:06	20.80	0.00	13:31	20.50	0.00	15:57	20.80	0.00
9:07	20.80	0.00	13:32	20.50	0.00	15:58	20.80	0.00
9:08	20.80	0.00	13:33	20.50	0.00	15:59	20.80	0.00
9:09	20.80	0.00	13:34	20.50	0.00	16:00	20.80	0.00
9:10	20.80	0.00	13:35	20.50	0.00	16:01	20.80	0.00
9:11	20.80	0.00	13:36	20.50	0.00	16:02	20.80	0.00
9:12	20.80	0.00	13:37	20.50	0.00	16:03	20.80	0.00
9:13	20.80	0.00	13:38	20.50	0.00	16:04	20.80	0.00
9:14	20.80	0.00	13:39	20.50	0.00	16:05	20.80	0.00
9:15	20.80	0.00	13:40	20.40	0.00	16:06	20.80	0.00
9:16	20.80	0.00	13:41	20.40	0.00	16:07	20.80	0.00
9:17	20.80	0.00	13:42	20.40	0.00	16:08	20.80	0.00
9:18	20.80	0.00	13:43	20.40	0.00	16:09	20.80	0.00
9:19	20.80	0.00	13:44	20.40	0.00	16:10	20.80	0.00
						16:14	20.60	0.00
			13:49	20.50	0.00	16:15	20.70	0.00
9:25	20.80	0.00	13:50	20.50	0.00	16:16	20.70	0.00
9:26	20.80	0.00	13:51	20.50	0.00	16:17	20.70	0.00
9:27	20.80	0.00	13:52	21.00	0.00	16:18	20.70	0.00
9:28	20.80	0.00	13:53	21.00	0.00	16:19	20.70	0.00
9:29	20.80	0.00	13:54	21.00	0.00	16:20	20.70	0.00
9:30	20.80	0.00	13:55	21.00	0.00	16:21	20.70	0.00
9:31	20.80	0.00	13:56	21.00	0.00	16:22	20.70	0.00
9:32	20.80	0.00	13:57	21.00	0.00	16:23	20.70	0.00

© Mostardi Platt

Client: Northern Metals, LLC
Facility: Pacific Street Yard
Project #: M173006
Test Location: Common Stack
Operating Condition: Normal
Date: 8/1/17

Run 1

Time	O2 % (dry)	CO2 % (dry)
9:33	20.80	0.00
9:34	20.80	0.00
9:35	20.80	0.00
9:36	20.80	0.00
9:37	20.80	0.00
9:38	20.80	0.00
9:39	20.80	0.00
9:40	20.80	0.00
9:41	20.80	0.00
9:42	20.80	0.00
9:43	20.80	0.00
9:44	20.80	0.00
9:45	20.80	0.00
9:46	20.80	0.00
9:47	20.80	0.00
9:48	20.80	0.00
9:49	20.80	0.00
9:50	20.80	0.00
9:51	20.80	0.00
9:52	20.80	0.00
9:53	20.80	0.00
9:54	20.80	0.00
9:55	20.80	0.00
9:56	20.80	0.00
9:57	20.80	0.00
9:58	20.80	0.00
9:59	20.80	0.00
10:00	20.80	0.00
10:01	20.80	0.00
10:02	20.80	0.00
10:03	20.80	0.00
10:04	20.80	0.00
10:05	20.80	0.00
10:06	20.80	0.00
10:07	20.80	0.00
10:08	20.80	0.00
10:09	20.80	0.00
10:10	20.80	0.00
10:11	20.80	0.00
10:12	20.80	0.00
10:13	20.80	0.00
10:14	20.80	0.00
Average	**20.82**	**0.00**
Min	20.80	0.00
Max	20.90	0.00

Run 2

Time	O2 % (dry)	CO2 % (dry)
13:58	21.00	0.00
13:59	21.00	0.00
14:00	21.00	0.00
14:01	21.00	0.00
14:02	21.00	0.00
14:03	21.00	0.00
14:04	21.00	0.00
14:05	21.00	0.00
14:06	21.00	0.00
14:07	21.00	0.00
14:08	21.00	0.00
14:09	21.00	0.00
14:10	21.00	0.00
14:11	21.00	0.00
14:12	21.00	0.00
14:13	21.00	0.00
14:14	21.00	0.00
14:15	21.00	0.00
14:16	21.00	0.00
14:17	21.00	0.00
14:19	21.00	0.00
14:19	21.00	0.00
14:20	21.00	0.00
14:21	21.00	0.00
14:22	21.00	0.00
14:23	21.00	0.00
14:24	21.00	0.00
14:25	21.00	0.00
14:26	21.00	0.00
14:27	21.00	0.00
14:28	21.00	0.00
14:29	21.00	0.00
14:30	21.00	0.00
14:31	21.00	0.00
14:32	21.00	0.00
14:33	21.00	0.00
14:34	21.00	0.00
14:35	21.00	0.00
14:36	21.00	0.00
14:37	21.00	0.00
Average	**20.82**	**0.00**
Min	20.40	0.00
Max	21.00	0.00

Run 3

Time	O2 % (dry)	CO2 % (dry)
16:24	20.70	0.00
16:25	20.70	0.00
16:26	20.70	0.00
16:27	20.70	0.00
16:28	20.70	0.00
16:29	20.70	0.00
16:30	20.70	0.00
16:31	20.60	0.00
16:32	20.60	0.00
16:33	20.60	0.00
16:34	20.60	0.00
16:35	20.60	0.00
16:36	21.00	0.00
16:37	21.00	0.00
16:38	21.00	0.00
16:39	21.00	0.00
16:40	21.00	0.00
16:41	21.00	0.00
16:42	21.00	0.00
16:43	21.00	0.00
16:44	21.00	0.00
16:45	21.00	0.00
16:46	21.00	0.00
16:47	21.00	0.00
16:48	21.00	0.00
16:49	21.00	0.00
16:50	21.00	0.00
16:51	21.00	0.00
16:52	21.00	0.00
16:53	21.00	0.00
16:54	21.00	0.00
16:55	21.00	0.00
16:56	21.00	0.00
16:57	21.00	0.00
16:58	21.00	0.00
16:59	21.00	0.00
17:00	21.00	0.00
17:01	21.00	0.00
17:02	21.00	0.00
17:03	21.00	0.00
17:04	21.00	0.00
17:05	21.00	0.00
Average	**20.88**	**0.00**
Min	20.60	0.00
Max	21.00	0.00

© Mostardi Platt

Appendix G - Field Data Sheets

© Mostardi Platt

Isokinetic Sampling Cover Sheet

Test Engineer: JRK
Test Technician: TJK

Plant Information

Run Number: 1
Test Location: Common Stack
Duct Shape: Circular or Rectangular
Flue Area: 26.250 ft²
Port Type: Flange
Test Method: 0061

Date: 8/1/17
Client Name: Northern Metals LLC
Length: _____ Width: _____ or Diameter: 5.78125 ft
Upstream Diameters: .5
Port Length: 6.5
Source Condition: Normal

Project Number: M17 ~~6003~~ 3006
Plant Name: Pacific Street Yard
Downstream Diameters: 2
Port Diameter: 6.5

Meter and Probe Data

Meter ID: CM 35
Pitot ID: 164
Nozzle ID #: teflon -.175
Probe Length: 7ft
Pre-Test Nozzle Leak Check: 0.0 @ 16 "Hg
Pre-Test Pitot Leak Check: 0.0 @ 05 "H_2O

Meter Y Value: .998
Pitot Coefficient: .84
Nozzle Diameter: .175
Probe Liner: teflon

ΔH Value: 1.796
Train Type: Anderson
Filter Number/Weight: —
Thimble Number/Weight: —
Post-Test Nozzle Leak Check: 0.0 @ 11 "Hg
Post-Test Pitot Leak Check: 0.0 @ 3 "H_2O

Traverse Data

Ports Sampled: 2
Total Points: 24

Points/Port: 12
Total Test Time: 120

Min/Point: 5
Sample Plane: Horizontal or Vertical

Stack Parameters

Barometric Pressure: 29.21
CO_2 %: ____/____/____/ Avg. 6.0
Imp and/or silica balance Model and S/N: 510-18
Initial Imp. Volume or Weight: 300
Initial Silica Weight: 244.6

Static Pressure: .6
O_2 %: ____/____/____/Avg. 20.7
Final Imp. Volume or Weight: 302
Final Silica Weight: 269.0

Determined by: Method 3 or Method 3A
Servomex Serial #: ECON #3
Imp. Volume or Weight Gain: 2
Silica Weight Gain: 24.4

Comments:

© Mostardi Platt

Isokinetic Sampling Field Data Sheet

Project Number: M17~~0003~~ 3006
Client: Northern Metals LLC
Plant: Pacific St. Yard Facility

Date: 8/1/17
Test Location: Common Stack
Test Method: 0061

Test Number: 1
Operator: JRK
Test Tech: AJH
Page Number: 1 of 1

K' ~~1.007~~ .996 K ~~.569~~ .563 x 5 248 ± 25 max 68

Port-Point #.	Time	(ΔP)	Orifice Setting (ΔH)	Meter Volume (V_m) ft^3, Actual	Square Root, ΔP	Meter Rate, Cubic Feet/ Min.	Theoretical Meter Volume, (V_m) ft^3, per point	Theoretical Meter Volume, (V_m) ft^3, total	Stack Temp, °F	Meter Temp Inlet, °F	Meter Temp Outlet, °F	Pump Vacuum, " Hg	Probe Temp. °F	Filter Temp. °F	Impinger Outlet Well Temp. °F
1-1	8:20	1.5	1.5	61.153	1.225	.697	3.484	—	86	72	72	5	250		63
2	25	1.3	1.3	64.638	1.140	.642	3.210	64.637	86	71	71	5	251		62
3	30	1.3	1.3	67.849	1.140	.642	3.210	67.847	87	71	71	5	253		61
4	35	1.2	1.2	71.059	1.095	.617	3.084	71.057	87	73	73	4	252		61
5	40	1.2	1.2	74.143	1.095	.617	3.084	74.141	87	73	73	4	256		60
6	45	1.4	1.4	77.225	1.183	.666	3.331	77.225	88	74	74	5	253		60
7	50	1.4	1.4	80.560	1.183	.666	3.331	80.556	89	74	74	5	250		62
8	55	1.5	1.5	83.888	1.225	.697	3.484	83.887	88	75	75	5	251		63
9	09 00	1.5	1.5	87.332	1.225	.697	3.484	87.371	90	75	75	5	253		64
10	05	1.6	1.6	90.857	1.265	.712	3.561	90.855	90	75	75	6	252		64
11	10	1.7	1.7	94.418	1.304	.734	3.670	94.416	91	76	76	6	250		65
12	15	1.7	1.7	98.090	1.304	.734	3.670	98.086	91	76	76	6	250		65
	20	—	—	101.760	—	—		101.756							
2-1	9:24	1.4	1.4	101.760	1.183	.666	3.331	—	92	76	76	5	252		63
2	29	1.3	1.3	105.093	1.140	.642	3.210	105.091	92	76	76	4	251		63
3	34	1.3	1.3	108.302	1.140	.642	3.210	108.301	93	77	77	4	251		64
4	39	1.3	1.3	111.514	1.140	.642	3.210	111.511	93	77	77	5	253		64
5	44	1.4	1.4	114.723	1.183	.666	3.331	114.721	93	77	77	5	252		63
6	49	1.5	1.5	118.054	1.225	.697	3.484	118.052	95	77	77	5	251		64
7	54	1.5	1.5	121.539	1.225	.697	3.484	121.536	95	77	77	6	250		64
8	59	1.3	1.3	125.023	1.140	.642	3.210	125.020	95	78	78	4	253		64
9	10 04	1.2	1.2	128.234	1.095	.617	3.084	128.230	95	78	78	4	252		64
10	09	1.3	1.3	131.316	1.140	.642	3.210	131.314	95	79	79	4	251		65
11	14	1.2	1.2	134.525	1.095	.617	3.084	134.524	95	79	79	4	253		65
12	19	1.2	1.2	137.610	1.095	.617	3.084	137.608	95	79	79	4	250		65
	1024	—	—	140.694	—	—		140.692							

© Mostardi Platt

IMPINGER WEIGHT SHEET

PLANT: Northern Metals

UNIT NO: Shredder

LOCATION: Stack

DATE: 8/1/17

TEST NO: 1

METHOD: 0061

WEIGHED/MEASURED BY: JFK

BALANCE ID: S10-18

(1) 0061

Circle One:	FINAL WEIGHT MLS / GRAMS	INITIAL WEIGHT MLS / GRAMS	IMPINGER GAIN	IMPINGER CONTENTS
IMPINGER 1	68	150		
IMPINGER 2	148	75		
IMPINGER 3	86	75		
IMPINGER 4	302	300	2	
IMPINGER 5				
IMPINGER 6				
IMPINGER 7				
IMPINGER 8	269.0	244.6	24.4	

	FINAL TOTAL	INITIAL TOTAL	TOTAL IMPINGER GAIN
IMPINGERS	302.0	300.0	2.0

	FINAL TOTAL	INITIAL TOTAL	TOTAL SILICA GAIN
SILICA	269.0	244.6	24.4

PH 12

© Mostardi Platt

Isokinetic Sampling Cover Sheet

Test Engineer: JRX
Test Technician: AJM

Plant Information

Run Number: 2
Test Location: Common Stack
Duct Shape: Circular or Rectangular
Flue Area: 26.152 ft²
Port Type: Flange
Test Method: 0061

Date: 8/1/17
Client Name: Northern Metals LLC
Length: / Width: / or Diameter: 5.7815 ft
Upstream Diameters: .5
Port Length: 6.5
Source Condition: Normal

Project Number: M17~~0003~~ 3006
Plant Name: Pacific St Yard
Downstream Diameters: 2
Port Diameter: 6.5

Meter and Probe Data

Meter ID: CM35
Pitot ID: 164
Nozzle ID # teflon .174
Probe Length: 7 ft
Pre-Test Nozzle Leak Check: 0.0 @ 15 "Hg
Pre-Test Pitot Leak Check: 0.0 @ 7 "H_2O

Meter Y Value: .998
Pitot Coefficient: .84
Nozzle Diameter: .175
Probe Liner: teflon

ΔH Value: 1.796
Train Type:
Filter Number/Weight: —
Thimble Number/Weight: —
Post-Test Nozzle Leak Check: 0.0 @ 12 "Hg
Post-Test Pitot Leak Check: 0.0 @ 6 "H_2O

Traverse Data

Ports Sampled: 2
Total Points: 24

Points/Port: 12
Total Test Time: 120

Min/Point: 5
Sample Plane: Horizontal or Vertical

Stack Parameters

Barometric Pressure: 29.21
CO_2 %: / / / Avg. 0.0
Imp and/or silica balance Model and S/N: 510-18
Initial Imp. Volume or Weight: 300
Initial Silica Weight: 239.9

Static Pressure: -0.6
O_2 %: / / / Avg. 20.8
Final Imp. Volume or Weight: 332
Final Silica Weight: 261.3

Determined by: Method 3 or Method 3A
Servomex Serial #: Econ #3
Imp. Volume or Weight Gain: 32
Silica Weight Gain: 21.4

Comments:

© Mostardi Platt

Isokinetic Sampling Field Data Sheet

Project Number: M17~~6003~~ 3006
Client: Northern Metals LLC
Plant: Pacific St. Yard Facility

Date: 8/1/17
Test Location: Common Stack
Test Method: 0061

Test Number: 2
Operator: JRK Test Tech: AJH
Page Number: 1 of 1

K' 1.006 K .584 X s 248±25 max 68

Port-Point #.	Time	(ΔP)	Orifice Setting (ΔH)	Meter Volume (V_m) ft^3, Actual	Square Root, ΔP	Meter Rate, Cubic Feet/ Min.	Theoretical Meter Volume, (V_m) ft^3, per point	Theoretical Meter Volume, (V_m) ft^3, total	Stack Temp, °F	Meter Temp Inlet, °F	Meter Temp Outlet, °F	Pump Vacuum, " Hg	Probe Temp. °F	Filter Temp. °F	Impinger Outlet Well Temp. °F
1-1	1245	1.5	1.5	42.000	1.225	.715	3.576	—	106	88	88	5	251		62
2	50	1.4	1.4	45.577	1.183	.691	3.454	45.576	107	87	87	5	253		61
3	55	1.3	1.3	49.034	1.140	.666	3.329	49.030	107	87	87	4	250		60
4	1300	1.2	1.2	52.361	1.095	.640	3.199	52.359	108	88	88	4	252		60
5	05	1.1	1.1	55.560	1.049	.613	3.063	55.558	107	89	89	4	254		61
6	10	1.4	1.4	58.623	1.183	.691	3.454	58.621	106	88	88	5	250		62
7	15	1.5	1.5	62.076	1.225	.715	3.576	62.075	107	88	88	5	252		63
8	20	1.4	1.4	65.653	1.183	.691	3.454	65.651	108	89	89	5	254		63
9	25	1.5	1.5	69.109	1.225	.715	3.576	69.105	108	90	90	5	251		64
10	30	1.7	1.7	72.684	1.304	.761	3.807	72.681	109	90	90	6	250		64
11	35	1.6	1.6	76.490	1.265	.739	3.694	76.485	108	91	91	5	252		65
12	40	1.6	1.6	80.185	1.265	.739	3.694	80.182	107	91	91	5	250		66
	45	—		83.876	—	—	—	83.876							
2-1	1348	1.4	1.4	83.876	1.183	.691	3.454	—	107	90	90	5	251		64
2	53	1.4	1.4	87.332	1.183	.691	3.454	87.33	107	90	90	5	250		63
3	58	1.3	1.3	90.786	1.140	.666	3.329	90.784	108	90	90	5	253		63
4	1403	1.2	1.2	94.115	1.095	.640	3.199	94.113	108	90	90	4	252		63
5	08	1.3	1.3	97.316	1.140	.666	3.329	97.312	107	91	91	5	250		62
6	13	1.4	1.4	100.643	1.183	.691	3.454	100.641	109	91	91	5	254		62
7	18	1.6	1.6	104.337	1.265	.739	3.694	104.335	107	91	91	6	256		61
8	23	1.4	1.4	107.791	1.183	.691	3.454	107.789	107	92	92	5	251		63
9	28	1.2	1.2	111.244	1.095	.640	3.199	111.243	108	92	92	4	250		63
10	33	1.3	1.3	114.443	1.140	.666	3.329	114.442	108	92	92	5	251		64
11	38	1.2	1.2	117.772	1.095	.640	3.199	117.771	107	93	93	4	250		64
12	43	1.1	1.1	120.973	1.049	.613	3.063	120.97	107	93	93	3	250		64
	1448	—		124.035	—	—	—	124.033							

© Mostardi Platt

IMPINGER WEIGHT SHEET

PLANT: Northern Metals

UNIT NO: Shredder

LOCATION: Stack

DATE: 8/1/17

TEST NO: 2

METHOD: 0061

WEIGHED/MEASURED BY: JFR

BALANCE ID: S10-18

(2) 0061

Circle One:	FINAL WEIGHT MLS / GRAMS	INITIAL WEIGHT MLS / GRAMS	IMPINGER GAIN	IMPINGER CONTENTS
IMPINGER 1	124	150		
IMPINGER 2	102	75		
IMPINGER 3	106	75		
IMPINGER 4	332	~~0~~ 300	32	
IMPINGER 5	261.3	239.9	21.4	
IMPINGER 6				
IMPINGER 7				
IMPINGER 8				

	FINAL TOTAL	INITIAL TOTAL	TOTAL IMPINGER GAIN
IMPINGERS	332.0	300.0	32.0
SILICA	261.3	239.9	21.4

PH 13

© Mostardi Platt

Isokinetic Sampling Cover Sheet

Test Engineer: JRK
Test Technician: AJH

Plant Information

Run Number: 3 | Date: 8/1/17 | Project Number: M176003 300lb
Test Location: Common Stack | Client Name: Northern Metals LLC | Plant Name: Pacific Street Yard
Duct Shape: Circular or Rectangular | Length: / Width: / or Diameter: 5.78115 ft
Flue Area: 26.250 Ft² | Upstream Diameters: 15 | Downstream Diameters: 2
Port Type: Planar | Port Length: 6.5 | Port Diameter: 6.5
Test Method: 0061 | Source Condition: Normal

Meter and Probe Data

Meter ID: CM35 | Meter Y Value: .998 | ΔH Value: 1.796
Pitot ID: 164 | Pitot Coefficient: .84 | Train Type:
Nozzle ID #: Kelan - .175 | Nozzle Diameter: .175 | Filter Number/Weight: —
Probe Length: 7 Ft | Probe Liner: Kelan | Thimble Number/Weight: —
Pre-Test Nozzle Leak Check: 0.0 @ 15 "Hg | Post-Test Nozzle Leak Check: 0.0 @ 12 "Hg
Pre-Test Pitot Leak Check: 0.0 @ 6 "H_2O | Post-Test Pitot Leak Check: 0.0 @ 5.8 "H_2O

Traverse Data

Ports Sampled: 2 | Points/Port: 12 | Min/Point: 5
Total Points: 24 | Total Test Time: 120 | Sample Plane: Horizontal or Vertical

Stack Parameters

Barometric Pressure: 25.71 | Static Pressure: + 0.6
CO_2 %: / / / Avg. 0.0 | O_2 %: / / / Avg. 20.9 | Determined by: Method 3 or Method 3A
Imp and/or silica balance Model and S/N: S10-1B | Servomex Serial #: ECOM#3
Initial Imp. Volume or Weight: 300 | Final Imp. Volume or Weight: 330 | Imp. Volume or Weight Gain: 30
Initial Silica Weight: 244.2 | Final Silica Weight: 264.6 | Silica Weight Gain: 20.4

Comments:

© Mostardi Platt

Isokinetic Sampling Field Data Sheet

Project Number: M173006 (~~M173003~~) Date: 8/1/17 Test Number: 3

Client: Northwest Metals LLC Test Location: Common Stack Operator: JRK Test Tech: [illegible]

Plant: Pacific Sh Yard Facility Test Method: 0061 Page Number: 1 of 1

K' 1.006 K .584 x5 max 68

Port-Point #.	Time	(ΔP)	Orifice Setting (ΔH)	Meter Volume (V_m) ft^3, Actual	Square Root, ΔP	Meter Rate, Cubic Feet/ Min.	Theoretical Meter Volume, (V_m) ft^3, per point	Theoretical Meter Volume, (V_m) ft^3, total	Stack Temp, °F	Meter Temp Inlet, °F	Meter Temp Outlet, °F	Pump Vacuum, " Hg	Probe Temp. °F	Filter Temp. °F	Impinger Outlet Well Temp. °F
1-1	1510	1.5	1.5	25.650	1.225	.715	3.576	—	102	88	88	5	250		64
2	15	1.4	1.4	29.230	1.183	.691	3.455	29.226	103	87	87	4	251		63
3	20	1.4	1.4	32.683	1.183	.691	3.455	32.681	102	87	87	5	252		63
4	25	1.1	1.1	36.139	1.049	.613	3.063	36.136	102	86	86	3	251		62
5	30	1.1	1.1	39.201	1.049	.613	3.063	39.199	102	87	87	3	250		61
6	35	1.4	1.4	42.265	1.183	.691	3.455	42.262	103	88	88	4	253		61
7	40	1.5	1.5	45.720	1.225	.715	3.576	45.717	103	89	89	5	252		61
8	45	1.5	1.5	49.296	1.225	.715	3.576	49.293	104	90	90	5	251		60
9	50	1.4	1.4	52.871	1.183	.691	3.455	52.869	103	90	90	5	250		60
10	55	1.7	1.7	56.326	1.304	.761	3.807	56.324	102	91	91	6	250		61
11	1600	1.6	1.6	60.133	1.265	.739	3.694	60.131	103	92	92	5	251		62
12	05	1.6	1.6	63.827	1.265	.739	3.694	63.825	103	92	92	5	253		62
	10	—	—	67.520	—	—	—	67.519	—	—	—	—	—		—
2-1	1613	1.5	1.5	67.520	1.225	.715	3.576	—	102	88	88	5	252		63
2	18	1.4	1.4	71.100	1.183	.691	3.455	71.096	102	88	88	4	256		62
3	23	1.4	1.4	74.553	1.183	.691	3.455	74.551	103	89	89	4	251		62
4	28	1.1	1.1	78.010	1.049	.613	3.063	78.006	102	89	89	3	250		62
5	33	1.3	1.3	81.071	1.140	.666	3.329	81.069	102	90	90	4	250		61
6	38	1.5	1.5	84.400	1.225	.715	3.576	84.398	101	90	90	5	253		61
7	43	1.5	1.5	87.976	1.225	.715	3.576	87.974	101	89	89	5	251		61
8	48	1.4	1.4	91.552	1.183	.691	3.455	91.550	102	89	89	4	250		62
9	53	1.3	1.3	95.008	1.140	.666	3.329	95.005	103	88	88	4	253		62
10	58	1.2	1.2	98.336	1.095	.640	3.199	98.334	103	88	88	4	252		63
11	1703	1.3	1.3	101.536	1.140	.666	3.329	101.537	102	89	89	4	249		63
12	08	1.1	1.1	104.866	1.049	.613	3.063	104.866	102	88	88	3	251		64
	1713	—	—	107.925	—	—	—	107.925	—	—	—	—	—		—

© Mostardi Platt

IMPINGER WEIGHT SHEET

PLANT: Northern Metals

UNIT NO: Shredder

LOCATION: Stack

DATE: 8/1/17

TEST NO: 3

METHOD: 0061

WEIGHED/MEASURED BY: JFR

BALANCE ID: S10-18

(3) 0061

Circle One:	FINAL WEIGHT MLS / GRAMS	INITIAL WEIGHT MLS / GRAMS	IMPINGER GAIN	IMPINGER CONTENTS
IMPINGER 1	89	150		
IMPINGER 2	152	75		
IMPINGER 3	89	75		
IMPINGER 4	330	300	30	
IMPINGER 5	264.6	244.2	20.4	
IMPINGER 6				
IMPINGER 7				
IMPINGER 8				

IMPINGERS	330.0 FINAL TOTAL	300.0 INITIAL TOTAL	30.0 TOTAL IMPINGER GAIN
SILICA	264.6 FINAL TOTAL	244.2 INITIAL TOTAL	20.4 TOTAL SILICA GAIN

PK 12

© Mostardi Platt

Isokinetic Sampling Cover Sheet

Test Engineer: LJC
Test Technician: JJB

Plant Information

Run Number: 1
Date: 7-26-17
Project Number: M173006
Test Location: Common Stack
Client Name: Northern Metals
Plant Name: Pacific St. Yard Facility
Duct Shape: Circular or Rectangular
Length: — Width: — or Diameter: 5.78125
Flue Area: 26.25
Upstream Diameters: 2
Downstream Diameters: 5
Port Type: Nipple
Port Length: 6.5
Port Diameter: 6.5
Test Method: 5 - Asbestos
Source Condition: Normal

Meter and Probe Data

Meter ID: CM35
Meter Y Value: .998
ΔH Value: 1.796
Pitot ID: 164
Pitot Coefficient: .84
Train Type: Anderson
Nozzle ID #: Teflon 11
Nozzle Diameter: .211
Filter Number/Weight:
Probe Length: 7
Probe Liner: Glass
Thimble Number/Weight: —
Pre-Test Nozzle Leak Check: 0.00 @ 14 "Hg
Post-Test Nozzle Leak Check: 0.00 @ 13 "Hg
Pre-Test Pitot Leak Check: ✓ "H_2O
Post-Test Pitot Leak Check: ✓ "H_2O

Traverse Data

Ports Sampled: 2
Points/Port: 12
Min/Point: 5
Total Points: 24
Total Test Time: 120 min
Sample Plane: Horizontal or Vertical

Stack Parameters

Barometric Pressure: 29.77
Static Pressure: .6
CO_2 %: / / / Avg. 0.0
O_2 %: / / / Avg. 20.8
Determined by: Method 3 or Method 3A
Imp and/or silica balance Model and S/N:
Servomex Serial #: Ecom5
Initial Imp. Volume or Weight: 2094.1
Final Imp. Volume or Weight: 2143.9
Imp. Volume or Weight Gain: 49.8
Initial Silica Weight: 755.9
Final Silica Weight: 788.8
Silica Weight Gain: 32.9

Comments:

© Mostardi Platt

Isokinetic Sampling Field Data Sheet

Project Number: M173006
Client: Northern Metals
Plant: Pacific Street Yard facility

Date: 7-26-17
Test Location: Common stack STRU1
Test Method: 5 - Asbestos

Test Number: 1
Operator: KJC
Test Tech: JJB
Page Number: 1 of 1

Port-Point #	Time	(ΔP)	Orifice Setting (ΔH)	Meter Volume (V_m) ft^3, Actual	Square Root, ΔP	Meter Rate, Cubic Feet/ Min.	Theoretical Meter Volume, (V_m) ft^3, per point	Theoretical Meter Volume, (V_m) ft^3, total	Stack Temp, °F	Meter Temp Inlet. °F	Meter Temp Outlet, °F	Pump Vacuum, " Hg	Probe Temp. °F	Filter Temp. °F	Impinger Outlet Well Temp. °F
1-1	0755	1.4	3.0	83.211	1.183	.973	4.863		90	70	70	3	250	251	67
	0757			85.471				88.074							
Pause, Unit issues															
1	0855	1.4	3.0	85.471	~~1.183~~	~~.973~~	~~4.863~~								
2	0858	1.5	3.2	88.08	1.223	1.007	5.034	88.074	94	70	70	3	251	251	55
3	0903	1.3	2.8	93.10	1.14	.937	4.686	93.108	95	70	70	3	251	250	60
4	0908	1.3	2.8	97.80	1.14	.937	4.686	97.794	95	70	70	3	251	251	61
5	0913	1.1	2.3	102.49	1.049	.862	4.311	102.48	96	71	71	3	251	252	63
6	0918	1.0	2.1	106.80	1.0	.822	4.11	106.791	97	71	71	3	251	252	63
7	0923	.96	2.0	110.91	.979	.805	4.027	110.901	97	72	72	3	252	251	63
8	0928	1.1	2.3	114.93	1.049	.862	4.311	114.928	98	72	72	3	251	251	64
9	0933	1.3	2.8	119.24	1.14	.937	4.686	119.239	99	72	72	3	251	251	64
10	0938	1.3	2.8	123.93	1.14	.937	4.686	123.924	100	73	73	3	251	251	64
11	0943	1.4	3.0	128.62	1.183	.973	4.863	128.611	101	74	74	3	251	250	65
12	0948	1.1	2.3	133.48	1.049	.862	4.311	133.474	101	74	74	3	251	253	65
	0953			137.796				137.785							
2-1	1000	1.7	3.5	137.796	1.304	1.057	5.287		102	75	75	5	251	252	66
2	1005	1.9	3.9	143.09	1.378	1.118	5.589	143.083	102	75	75	5	251	252	65
3	1010	1.9	3.9	148.68	1.378	1.118	5.589	148.672	102	75	75	5	250	251	65
4	1015	1.7	3.5	154.27	1.304	1.057	5.287	154.261	102	75	75	5	251	250	65
	1017			156.427											
Pause, Unit issues															
4	1050	1.7	3.5	156.427				~~154.548~~	98	75	75	5	250	251	66
5	1053	1.6	3.3	159.55	1.265	1.026	5.129	159.548	100	75	75	5	251	251	62
6	1058	1.4	2.9	164.68	1.183	.959	4.798	164.677	100	77	77	4	251	252	62
7	1103	1.2	2.5	169.48	1.095	.888	4.442	169.475	100	76	76	3	251	251	63
8	1108	1.1	2.3	173.92	1.049	.851	4.253	173.917	100	77	77	3	252	251	63
9	1113	.97	2.0	178.17	.985	.799	3.994	178.169	101	76	76	2	251	251	63
10	1118	1.1	2.3	182.17	1.049	.851	4.253	182.163	101	77	77	3	252	251	64
11	1123	1.1	2.3	186.42	1.049	.851	4.253	186.416	102	77	77	3	251	251	64
12	1128	1.1	2.3	190.67	1.049	.851	4.253	190.669	102	77	77	3	251	252	64
	1133			194.938				194.929							

Project No. M173006 Rev. 1
Common Stack (STRU1)

171 of 312

© Mostardi Platt

IMPINGER WEIGHT SHEET

PLANT: Northern metals

UNIT NO: Shredder

LOCATION: Stack

(1) m5 Asp

DATE: 7/25/17

TEST NO: 1

METHOD: M5 (Asbestos)

WEIGHED/MEASURED BY: SFR

BALANCE ID: S/0 - 18

Circle One:	FINAL WEIGHT MLS / GRAMS	INITIAL WEIGHT MLS / GRAMS	IMPINGER GAIN	IMPINGER CONTENTS
IMPINGER 1	715.3	707.8		
IMPINGER 2	794.9	762.8		
IMPINGER 3	633.7	623.5		
IMPINGER 4	788.8	755.9		
IMPINGER 5				
IMPINGER 6				
IMPINGER 7				
IMPINGER 8				

	FINAL TOTAL	INITIAL TOTAL	TOTAL IMPINGER GAIN
IMPINGERS	2143.9	2094.1	49.8
SILICA	788.8	755.9	32.6

© Mostardi Platt

Isokinetic Sampling Cover Sheet

Test Engineer: KSC
Test Technician: JSB

Plant Information

Run Number: 2
Date: 7-26-17
Project Number: M173006
Test Location: Common Stack
Client Name: Northern Metals
Plant Name: Pacific St. Yard Facility
Duct Shape: Circular or Rectangular
Length: — Width: — or Diameter: 5.78125
Flue Area: 26.25
Upstream Diameters: 2
Downstream Diameters: .5
Port Type: Nipple
Port Length: 6.5
Port Diameter: 6.5
Test Method: 5 - Asbestos
Source Condition: Normal

Meter and Probe Data

Meter ID: CM35
Meter Y Value: .998
ΔH Value: 1.796
Pitot ID:
Pitot Coefficient: .84
Train Type: Anderson
Nozzle ID #: Teflon II
Nozzle Diameter: .178
Filter Number/Weight:
Probe Length: 7
Probe Liner: Glass
Thimble Number/Weight: —
Pre-Test Nozzle Leak Check: 0.0 @ 13 "Hg
Post-Test Nozzle Leak Check: 0.0 @ 13 "Hg
Pre-Test Pitot Leak Check: ✓ "H_2O
Post-Test Pitot Leak Check: ✓ "H_2O

Traverse Data

Ports Sampled: 2
Points/Port: 12
Min/Point: 3
Total Points: 24
Total Test Time: 120 min
Sample Plane: Horizontal or Vertical

Stack Parameters

Barometric Pressure: 29.77
Static Pressure: .6
CO_2 %: ___/___/___/ Avg. 0.0
O_2 %: ___/___/___/Avg. 20.8
Determined by: Method 3 or Method 3A
Imp and/or silica balance Model and S/N:
Servomex Serial #: Bam 3
Initial Imp. Volume or Weight: 2149.3
Final Imp. Volume or Weight: 2200.7
Imp. Volume or Weight Gain: 51.4
Initial Silica Weight: 829.7
Final Silica Weight: 851.4
Silica Weight Gain: 21.7

Comments:

© Mostardi Platt

Isokinetic Sampling Field Data Sheet

Project Number: M173006
Client: Northern Metals
Plant: Pacific St. Yard Facility

Date: 7-26-17
Test Location: Common Stack
Test Method: 5 - Asbestos

Test Number: 2
Operator: KJC
Test Tech: JJB
Page Number: 1 of 1

Port-Point #.	Time	x1.026 (ΔP)	Orifice Setting (ΔH)	Meter Volume (V_m) ft^3, Actual	x.571 Square Root, ΔP	x5 Meter Rate, Cubic Feet/ Min.	Theoretical Meter Volume, (V_m) ft^3, per point	Theoretical Meter Volume, (V_m) ft^3, total	Stack Temp, °F	Meter Temp Inlet, °F	Meter Temp Outlet, °F	Pump Vacuum, " Hg	Probe Temp. °F	Filter Temp. °F	Impinger Outlet Well Temp. °F
1-1	1250	1.3	1.33	95.762	1.140	.651	3.255		104	81	81	3	253	251	65
2	1255	1.3	1.3	99.02	1.14	.651	3.255	99.017	104	81	81	3	251	252	65
3	1300	1.6	1.6	102.28	1.265	.722	3.611	102.272	104	80	80	3	251	251	64
4	1305	1.5	1.5	105.89	1.225	.699	3.497	105.883	104	80	80	3	251	250	64
5	1310	1.4	1.4	109.38	1.183	.676	3.378	109.359	104	81	81	3	251	251	64
6	1315	1.2	1.2	112.76	1.095	.625	3.127	112.757	104	81	81	3	250	251	64
7	1320	1.1	1.1	115.89	1.049	.599	2.994	115.884	104	82	82	3	251	253	64
8	1325	1.3	1.3	118.88	1.14	.651	3.255	118.878	104	82	82	3	253	252	64
9	1330	1.4	1.4	122.14	1.183	.676	3.378	122.133	104	82	82	3	252	251	64
10	1335	1.5	1.5	125.52	1.225	.699	3.497	125.511	104	82	82	4	251	250	64
11	1340	1.3	1.3	129.01	1.14	.651	3.255	129.008	104	82	82	3	251	250	65
12	1345	1.2	1.2	132.27	1.095	.625	3.127	132.263	104	82	82	3	251	251	65
	1350			135.406				135.39							
2-1	1525	2.2	2.3	135.406	1.483	.847	4.235		102	82	82	5	253	252	67
2	1530	2.0	2.1	139.65	1.414	.808	4.038	139.641	100	83	83	5	251	251	56
3	1535	2.1	2.2	143.68	1.449	.827	4.137	143.679	100	83	83	5	250	250	57
4	1540	1.7	1.7	147.82	1.304	.744	3.722	147.816	101	84	84	5	251	251	58
5	1545	1.5	1.5	151.54	1.225	.699	3.497	151.538	101	83	83	5	250	251	59
6	1550	1.5	1.5	155.04	1.225	.699	3.497	155.035	101	84	84	5	250	253	59
7	1555	1.4	1.4	158.54	1.183	.676	3.378	158.531	102	84	84	4	251	251	59
8	1600	1.0	1.0	161.91	1	.571	2.855	161.909	104	84	84	3	250	250	60
9	1605	.98	1.0	164.77	.989	.565	2.826	164.764	104	84	84	3	252	253	61
10	1610	1.1	1.1	167.60	1.049	.599	2.994	167.590	104	84	84	3	252	251	61
11	1615	1.0	1.0	170.59	1	.571	2.855	170.584	104	85	85	3	252	253	61
12	1620	1.0	1.0	173.45	1	.571	2.855	173.439	104	85	85	3	253	253	61
	1625			176.311				176.294							

Project No. M173006 Rev. 1
Common Stack (STRU1)
174 of 312
© Mostardi Platt

IMPINGER WEIGHT SHEET

PLANT: Norton Metals

UNIT NO: Shredder

LOCATION: Stack

(2) M5 asb.

DATE: 7/25/17

TEST NO: 2

METHOD: 5 (Asbestos)

WEIGHED/MEASURED BY: JFK

BALANCE ID: 510-18

Circle One:	FINAL WEIGHT MLS / GRAMS	INITIAL WEIGHT MLS / GRAMS	IMPINGER GAIN	IMPINGER CONTENTS
IMPINGER 1	758.2	731.9		
IMPINGER 2	770.8	754.1		
IMPINGER 3	671.7	663.3		
IMPINGER 4	851.4	829.7		
IMPINGER 5				
IMPINGER 6				
IMPINGER 7				
IMPINGER 8				

	FINAL TOTAL	INITIAL TOTAL	TOTAL IMPINGER GAIN
IMPINGERS	2200.7	2149.3	51.4
SILICA	851.4	829.7	21.7

© Mostardi Platt

Isokinetic Sampling Cover Sheet

Test Engineer: KJC
Test Technician: JJB

Plant Information

Run Number: 3
Date: 7-27-17
Project Number: M173006
Test Location: Common Stack STRU1
Client Name: Northern Metals
Plant Name: Pacific Street Yard Facility
Duct Shape: Circular or Rectangular
Length: _____ Width: _____ or Diameter: 5.78125
Flue Area: 26.25
Upstream Diameters: 2
Downstream Diameters: .5
Port Type: Nipple
Port Length: 6.5
Port Diameter: 6.5
Test Method: 5 Asbestos
Source Condition: Normal

Meter and Probe Data

Meter ID: CM35
Meter Y Value: .998
ΔH Value: 1.796
Pitot ID: 164
Pitot Coefficient: .84
Train Type: Anderson
Nozzle ID #: Teflon 11
Nozzle Diameter: .178
Filter Number/Weight: _____
Probe Length: 7'
Probe Liner: Glass
Thimble Number/Weight: _____
Pre-Test Nozzle Leak Check: 0.0 @ 12 "Hg
Post-Test Nozzle Leak Check: 0.00 @ 13 "Hg
Pre-Test Pitot Leak Check: 103 "H_2O
Post-Test Pitot Leak Check: 103 "H_2O

Traverse Data

Ports Sampled: 2
Points/Port: 12
Min/Point: 5
Total Points: 24
Total Test Time: 120 min
Sample Plane: Horizontal or Vertical

Stack Parameters

Barometric Pressure: 29.14
Static Pressure: -.6
CO_2 %: ____/____/____/ Avg. 0.0
O_2 %: ____/____/____/Avg. 20.9
Determined by: Method 3 or Method 3A
Imp and/or silica balance Model and S/N: _____
Servomex Serial #: B Comp
Initial Imp. Volume or Weight: 2099.8
Final Imp. Volume or Weight: 2136.9
Imp. Volume or Weight Gain: 37.1
Initial Silica Weight: 755.6
Final Silica Weight: 777.6
Silica Weight Gain: 22.0

Comments:

© Mostardi Platt

Isokinetic Sampling Field Data Sheet

Project Number: M173006
Client: Northern Metals
Plant: Pacific Street yard facility

Date: 7-27-17
Test Location: Common stack STRU1
Test Method: 5-Asbestos

Test Number: 3
Operator: KJC
Test Tech: JJB
Page Number: 1 of 1

Port-Point #.	Time	1.05 ~~1.079~~ (ΔP)	Orifice Setting (ΔH)	Meter Volume (V_m) ft^3, Actual	.592 ~~x .58~~ Square Root, ΔP	x5 Meter Rate, Cubic Feet/ Min.	Theoretical Meter Volume, (V_m) ft^3, per point	Theoretical Meter Volume, (V_m) ft^3, total	Stack Temp, °F	Meter Temp Inlet, °F	Meter Temp Outlet, °F	Pump Vacuum, " Hg	Probe Temp. °F	Filter Temp. °F	Impinger Outlet Well Temp. °F
1-1	1005	2.1	2.2	76.936	1.449	.848	4.24		100	77	77	4	251	251	67
2	1010	2.1	2.2	81.18	1.449	.848	4.24	81.176	100	78	78	4	252	251	67
3	1015	2.2	2.3	85.42	1.483	.868	4.338	85.416	101	79	79	4	251	252	66
4	1020	1.9	2.0	89.76	1.378	.806	4.032	89.754	101	79	79	4	251	250	66
5	1025	1.7	1.8	93.79	1.304	.763	3.814	93.786	102	80	80	4	252	253	66
6	1030	1.5	1.6	97.60	1.225	.716	3.582	97.599	102	80	80	3	251	254	65
7	1035	~~1.5~~ 1.4	1.5	101.19	1.183	.692	3.461	101.181	102	80	80	3	251	254	65
8	1040	1.0	1.0	104.65	1.0	.585	2.925	104.642	101	81	81	2	251	252	65
9	1045	1.0	1.0	107.57	1.0	.585	2.925	107.567	101	81	81	2	252	253	65
10	1050	1.2	1.2	110.51	1.095	.641	3.204	110.492	101	82	82	2	251	251	64
11	1055	1.2	1.2	113.67	1.095	.641	3.204	113.696	101	82	82	2	252	251	64
12	1100	1.1	1.1	116.91	1.049	.614	3.068	116.900	101	83	83	2	251	251	64
	1105			119.977				119.968							
2-1	1235	.6	.7	119.977	.765	.449	3.744		97	86	86	3	251	251	66
2	1240	.4	.5	123.73	.183	.700	3.502	123.721	98	86	86	3	251	252	60
3	1245	.3	.4	127.23	1.140	.675	3.375	127.223	98	86	86	3	252	253	60
4	1250	.3	.4	130.60	1.14	.675	3.375	130.598	97	84	84	3	251	253	59
5	1255	.1	.2	133.98	1.049	.621	3.104	133.973	97	86	86	3	251	251	59
6	1300	.0	.1	137.08	1.0	.592	2.96	137.077	98	87	87	2	252	251	60
7	1305	.0	.1	140.04	1.0	.592	2.96	140.037	99	87	87	2	251	251	60
8	1310	.2	.3	143.01	1.095	.649	3.243	142.997	98	86	86	2	252	253	60
9	1315	.4	.5	146.25	1.183	.700	3.502	146.24	98	85	85	3	251	254	59
10	1320	.5	.6	149.75	1.225	.725	3.625	149.742	98	85	85	3	252	254	59
11	1325	.3	.4	153.37	1.14	.675	3.375	153.367	99	84	84	3	250	254	60
12	1330	.2	.3	156.75	1.095	.649	3.243	156.742	99	84	84	3	251	252	60
	1335			159.997				159.985							

© Mostardi Platt

IMPINGER WEIGHT SHEET

PLANT: Northern Metals

UNIT NO: Shredder

LOCATION: Stack

DATE:

TEST NO: 3

METHOD: 5 (Asbestos)

WEIGHED/MEASURED BY: JFR

BALANCE ID: S10-18

(3) M5

Circle One:	FINAL WEIGHT MLS / GRAMS	INITIAL WEIGHT MLS / GRAMS	IMPINGER GAIN	IMPINGER CONTENTS
IMPINGER 1	739.4	724.1		
IMPINGER 2	765.4	749.8		
IMPINGER 3	632.1	625.9		
IMPINGER 4	777.6	755.6		
IMPINGER 5				
IMPINGER 6				
IMPINGER 7				
IMPINGER 8				

	FINAL TOTAL	INITIAL TOTAL	TOTAL IMPINGER GAIN
IMPINGERS	2136.9	2099.8	59.1
SILICA	777.6	755.6	22.0

© Mostardi Platt

MERCURY SORBENT TRAP FIELD DATA SHEET

Project Name/Number: M173006 Northern Metals LLC
Sampling Location: Common Stack STRU1 Run Number: 1 (Sub)
Date: 8/1/17 Barometric Pressure:
Source Condition: Normal Test Engineer: AJ1
Dry Gas Meter No. M2 Y = 0.998 Trap Number OLC043150

Sample Train A					
Clock Time 24 hour	Stack Temp. °F	Sorbent Trap Temp. °F	Meter Temp. (t_m) °F	Meter Volume (V_m) liters	Meter Vacuum, "Hg
9:47a	95	182	82	0	2
9:52	96	191	82	2.624	2
9:57	98	240	83	5.341	2
10:02	101	284	85	7.920	2
10:07	102	282	86	10.673	2
10:12	102	269	87	13.675	2
10:17	102	275	87	16.177	2
10:22	103	283	87	18.748	2
10:27	104	287	88	21.306	2
10:32	104	287	89	24.047	2
10:37	104	288	90	26.688	2
10:42	104	290	90	29.532	2
10:47	104	290	90	32.085	2
Total/Average			86.6		

Dry Gas Meter No. M2 Y = 1.000 Trap Number OL308930 Spike Value 50 ng

Sample Train B					
Clock Time 24 hour	Stack Temp. °F	Sorbent Trap Temp. °F	Meter Temp. (t_m) °F	Meter Volume (V_m) liters	Meter Vacuum, "Hg
9:47	95	182	81	0	2
9:52	96	191	82	2.890	2
9:57	98	240	83	5.421	2
10:02	101	284	84	7.727	2
10:07	102	282	86	10.219	2
10:12	102	269	86	12.865	2
10:17	102	275	87	15.235	2
10:22	103	283	86	17.705	2
10:27	104	287	88	20.174	2
10:32	104	287	89	22.748	2
10:37	104	288	89	25.289	2
10:42	104	290	90	27.944	2
10:47	104	290	90	30.333	2
Total/Average			86.2		

SCFM 102,264
SCFM 613,840

Train A: Pre-Test Leak Check – Pass @ 10 "Hg
Post-Test Leak Check – Pass @ 15 "Hg
Train B: Pre-Test Leak Check – Pass @ 10 "Hg
Post-Test Leak Check – Pass @ 15 "Hg

© Mostardi Platt 3/2/2015

Trap ID

OLC043150

OHIO LUMEX

Sorbent Trap Chain of Custody Form

☒ **Unspiked** ☐ **Spiked At:**_____

Spiking Method Cold Vapor Adsorption Via Impinger Sparging
Certified Accuracy ± 10%, Traceable to NIST

QA/QC Signature (Trap Maker) [signature]

QA/QC Signature (Spiker)_____

Production Lot: U-9EA Carbon Lot: NC

☐High Flow ☐Coil Pre-filter ☐240 mm
☐Static Pre-filter ☐AGS ☐300 mm
☐Fluffy Pre-filter ☒185 mm ☐450 mm

Spike Date:_____ Spike Time:_____ Type of Trap: 30B

TO BE FILLED OUT BY SAMPLING TECHNICIAN

Plant/Source: Northern Metals LLC

PRE-Run Leak Check (circle one): (PASS) FAIL

Boiler ID: _____

Run START: 8/1/17 (Date) 9:47a (Time)

Sampling Location: Stack (stack, FGD inlet, etc.)

Run Number (optional): ~~2~~ 1

Run END: 8/1/~~3~~17 (Date) 10:47a (Time)

Sampling Train (circle one): (A) B

POST-Run Leak Check (circle one): (PASS) FAIL

Notes: _____

SAMPLING CONDITIONS AND PARAMETERS

Ave Duct Temp (F°): _____

Estimated Ave Hg Concentration (µg/dscm): _____

Ave Trap Temp (F°): _____

Circle Event if Occurred During Sampling:

STARTUP **SHUTDOWN**

Ave Flow Rate (cc/min): _____

Total Volume (L)_____ or (dscm):_____

For CEMENT KILNS Only

No. of RAW MILL OFF Events During Sampling: _____

REQUIRED IF RETURNING TO OHIO LUMEX FOR ANALYSIS

Estimated Hg Mass in Section 1 of Sorbent Trap (ng): _____

Note: Analyzer calibration range will be set based on this value. Leaving this blank may result in out-of-calibration analysis. Please contact us if you require assistance estimating this value.

Chain Of Custody

Signatures along with Date/Time required for Insertion, removal, lab receiving and lab analysis of trap.

	Signature	Date	Time	Security Seal
Trap inserted by				**If Applicable** Place Chain of Custody seal here (See Security Seal Instruction Sheet)
Trap removed and sealed by				
Courier/Other (If Applicable)				Seal intact as received Yes ☐ No ☐
Courier/Other (If Applicable)				Seal intact as received Yes ☐ No ☐
Trap received by lab				Seal intact as received Yes ☐ No ☐
Trap analyzed by				Seal intact as received Yes ☐ No ☐

Make sure all of your sampling conditions prevent moisture condensation in the trap media. Moisture condensation is a major cause of breakthrough and spike loss in sorbent traps and should be prevented at all costs.

Ohio Lumex Co., Inc. 30350 Bruce Industrial Pkwy. Solon, OH 44139 USA
Phone: 888-876-2611 mail@ohiolumex.com

Deactivated glass and glass wool Impregnated Activated Carbon – Refer to SDS

Best Before: April 2020

© Mostardi Platt

Trap ID

OL308930

OHIO LUMEX

Sorbent Trap Chain of Custody Form

☐ **Unspiked** ☒ **Spiked At:** 50ng

Certified Accuracy ± 10%, Traceable to NIST

QA/QC Signature (Trap Maker) _____

QA/QC Signature (Spiker) _____

Production Lot: S-DCA Carbon Lot: RC

☐High Flow ☐Coil Pre-filter ☐240 mm
☐Static Pre-filter ☐AGS ☐300 mm
☐Fluffy Pre-filter ☒185 mm ☐450 mm

Spike Date: 11/9/2015 Spike Time: 0940

Type of Trap: 30B

Plant/Stack		Notes	
STMMS ID (check box)	Primary STMMS ☐	Backup STMMS ☐	Tester ☐
Trap A or B (check box)	Trap A ☐ Trap B ☒	Sampling System Manufacturer (check box)	Altech ☐
RATA Run Number (For RATA only)		Apex ☐ Clean Air ☐ Environmental Supply ☐ M&C ☐ Ohio Lumex ☐	
Trap Inserted/Pre-Leak Check (CEMS Date/Time)		Pre-Leak Check (check box)	
Date	Time	Pass ☐ Fail ☐	
Sample Collection Start (CEMS Date/Time)		Duct Temp. (°F)	
Date	Time	Sorbent Trap Temp. (°F)	
Sample Collection End (CEMS Date/Time)		Average Flow Rate (cc/min)	
Date	Time	Total Volume (L)	
Post-Leak Check/Trap Removed (CEMS Date/Time)		Post-Leak Check (check box)	
Date	Time	Pass ☐ Fail ☐	
Startup Event and/or Shutdown Event occurred (check box)		Startup Event ☐	Shutdown Event ☐
Estimated Hg Concentration (µg/dscm)		**Estimated Hg in Section 1**	

If thermal desorption is used for analysis, an estimated Hg mass is required for sample acceptance.
If no estimated mass is provided, the spike mass will be used as the estimate. Results are guaranteed between 20% and 300% of the estimate.

For Cement Kilns	Indicate number of Raw Mill Off events during this sample run:

Chain Of Custody

Signatures along with Date/Time required for insertion, removal, lab receiving and lab analysis of trap.

	Signature	Date	Time	Security Seal
Trap inserted by				**If Applicable** Place Chain of Custody seal here (See Security Seal Instruction Sheet)
Trap removed and sealed by				
Trap received by lab				Seal intact as received Yes ☐ No ☐
Trap analyzed by				Seal intact as received Yes ☐ No ☐

Make sure all of your sampling conditions prevent moisture condensation in the trap media. Moisture condensation is a major cause of breakthrough and spike loss in sorbent traps and should be prevented at all costs.

For Analysis contact us:

Ohio Lumex Co., Inc. 9263 Ravenna Road Unit A-3, Twinsburg, OH 44087 USA
Phone 330-405-0837 Fax 330-405-0847 US Toll Free: 888-876-2611

Best Before: November 2018

Impregnated Activated Carbon – Refer to MSDS
Deactivated glass and glass wool

© Mostardi Platt

MERCURY SORBENT TRAP FIELD DATA SHEET

Project Name/Number: M173006 Northern Metals LLC 2
Sampling Location: Common Stack STRU 2 Run Number: 2
Date: 8/1/17 Barometric Pressure: /
Source Condition: Normal Test Engineer: AJ
Dry Gas Meter No. M2 Y = 0.998 Trap Number OLC041747

Sample Train A					
Clock Time 24 hour	Stack Temp. °F	Sorbent Trap Temp. °F	Meter Temp. (t_m) °F	Meter Volume (V_m) liters	Meter Vacuum, "Hg
11:14	103	256	95	0	2
11:19	102	254	95	2.811	2
11:24	104	250	96	5.554	2
11:29	106	252	97	8.150	2
11:34	107	252	98	10.838	2
11:39	106	251	98	14.010	2
11:44	107	252	99	17.210	2
11:49	108	253	99	20.127	2
11:54	108	252	100	23.119	2
11:59	109	252	101	26.022	2
12:04	109	253	102	29.015	2
12:09	109	253	102	32.316	2
12:14	109	253	102	35.044	2
Total/Average		252.54	98.77		

Dry Gas Meter No. M2 Y = 1.000 Trap Number OL369616 Spike Value 50 ng

Sample Train B					
Clock Time 24 hour	Stack Temp. °F	Sorbent Trap Temp. °F	Meter Temp. (t_m) °F	Meter Volume (V_m) liters	Meter Vacuum, "Hg
11:14	103	256	95	0	2
11:19	102	254	94	2.700	2
11:24	104	250	94	5.387	2
11:29	106	252	94	7.688	2
11:34	107	252	94	9.901	2
11:39	106	251	95	12.111	2
11:44	107	252	96	14.998	2
11:49	108	253	97	17.353	2
11:54	108	252	97	19.803	2
11:59	109	252	98	22.254	2
12:04	109	253	98	24.689	2
12:09	109	253	98	27.215	2
12:14	109	253	98	29.650	2
				34.174	
Total/Average		252.54	96		

Train A: Pre-Test Leak Check – Pass @ 10 "Hg
Post-Test Leak Check – Pass @ 15 "Hg
Train B: Pre-Test Leak Check – Pass @ 10 "Hg
Post-Test Leak Check – Pass @ 15 "Hg

© Mostardi Platt

Trap ID

OLC041747

OHIO LUMEX

Sorbent Trap Chain of Custody Form

☒ **Unspiked** ☐ **Spiked At:**_____

Spiking Method Cold Vapor Adsorption Via Impinger Sparging
Certified Accuracy ± 10%, Traceable to NIST

QA/QC Signature (Trap Maker) [signature]

QA/QC Signature (Spiker)_____

Production Lot: U-9EA Carbon Lot: NC

☐High Flow ☐Coil Pre-filter ☐240 mm
☐Static Pre-filter ☐AGS ☐300 mm
☐Fluffy Pre-filter ☒185 mm ☐450 mm

Spike Date:_____ Spike Time:_____ Type of Trap: 30B

TO BE FILLED OUT BY SAMPLING TECHNICIAN

Plant/Source: Northern Metals LLC

PRE-Run Leak Check (circle one): PASS FAIL

Boiler ID: _____

Run START: 11:14 (Date) ↔ 8/1/17 (Time)

Sampling Location: Stack (stack, FGD inlet, etc.)

Run Number (optional): 3

Run END: 12:14 (Date) ↔ 8/1/17 (Time)

Sampling Train (circle one): A B

POST-Run Leak Check (circle one): PASS FAIL

Notes: _____

SAMPLING CONDITIONS AND PARAMETERS

Ave Duct Temp (F°): _____

Estimated Ave Hg Concentration (µg/dscm): _____

Ave Trap Temp (F°): _____

Circle Event if Occurred During Sampling:

Ave Flow Rate (cc/min): _____

STARTUP **SHUTDOWN**

Total Volume (L)_____ or (dscm):_____

For CEMENT KILNS Only

No. of RAW MILL OFF Events During Sampling: _____

REQUIRED IF RETURNING TO OHIO LUMEX FOR ANALYSIS

Estimated Hg Mass in Section 1 of Sorbent Trap (ng): _____

Note: Analyzer calibration range will be set based on this value. Leaving this blank may result in out-of-calibration analysis. Please contact us if you require assistance estimating this value.

Chain Of Custody

Signatures along with Date/Time required for insertion, removal, lab receiving and lab analysis of trap.

	Signature	Date	Time	Security Seal
Trap inserted by				**If Applicable** Place Chain of Custody seal here (See Security Seal Instruction Sheet)
Trap removed and sealed by				
Courier/Other (If Applicable)				Seal intact as received Yes ☐ No ☐
Courier/Other (If Applicable)				Seal intact as received Yes ☐ No ☐
Trap received by lab				Seal intact as received Yes ☐ No ☐
Trap analyzed by				Seal intact as received Yes ☐ No ☐

Make sure all of your sampling conditions prevent moisture condensation in the trap media. Moisture condensation is a major cause of breakthrough and spike loss in sorbent traps and should be prevented at all costs.

Ohio Lumex Co., Inc. 30350 Bruce Industrial Pkwy. Solon, OH 44139 USA
Phone: 888-876-2611 mail@ohiolumex.com

Deactivated glass and glass wool Impregnated Activated Carbon – Refer to SDS

Best Before: April 2020

© Mostardi Platt

Trap ID

OL369616

OHIO LUMEX

Sorbent Trap Chain of Custody Form

☐ **Unspiked** ☒ **Spiked At:** 50ng

Spiking Method Cold Vapor Adsorption Via Impinger Sparging
Certified Accuracy ± 10%, Traceable to NIST

QA/QC Signature (Trap Maker) [signature]

QA/QC Signature (Spiker) [signature]

Production Lot: S-1A96 Carbon Lot: NC

☐High Flow ☐Coil Pre-filter ☐240 mm
☐Static Pre-filter ☐AGS ☐300 mm
☐Fluffy Pre-filter ☒185 mm ☐450 mm

Spike Date: 1/6/2017 Spike Time: 1017

Type of Trap: 30B

TO BE FILLED OUT BY SAMPLING TECHNICIAN

Plant/Source: Northern Metals LLC

PRE-Run Leak Check (circle one): (PASS) FAIL

Boiler ID:

Run START: 8/1/17 (Date) 11:14a (Time)

Sampling Location: Stack (stack, FGD inlet, etc.)

Run Number (optional):

Run END: 8/1/17 (Date) 12:14p (Time)

Sampling Train (circle one): A (B)

POST-Run Leak Check (circle one): (PASS) FAIL

Notes:

SAMPLING CONDITIONS AND PARAMETERS

Ave Duct Temp (F°):

Estimated Ave Hg Concentration (µg/dscm):

Ave Trap Temp (F°):

Circle Event if Occurred During Sampling:

Ave Flow Rate (cc/min):

STARTUP **SHUTDOWN**

Total Volume (L) or (dscm):

For CEMENT KILNS Only

No. of RAW MILL OFF Events During Sampling:

REQUIRED IF RETURNING TO OHIO LUMEX FOR ANALYSIS

Estimated Hg Mass in Section 1 of Sorbent Trap (ng):

Note: Analyzer calibration range will be set based on this value. Leaving this blank may result in out-of-calibration analysis. Please contact us if you require assistance estimating this value.

Chain Of Custody

Signatures along with Date/Time required for insertion, removal, lab receiving and lab analysis of trap.

	Signature	Date	Time	Security Seal
Trap inserted by				**If Applicable** Place Chain of Custody seal here (See Security Seal Instruction Sheet)
Trap removed and sealed by				
Courier/Other (If Applicable)				Seal intact as received Yes ☐ No ☐
Courier/Other (If Applicable)				Seal intact as received Yes ☐ No ☐
Trap received by lab				Seal intact as received Yes ☐ No ☐
Trap analyzed by				Seal intact as received Yes ☐ No ☐

Make sure all of your sampling conditions prevent moisture condensation in the trap media. Moisture condensation is a major cause of breakthrough and spike loss in sorbent traps and should be prevented at all costs.

Ohio Lumex Co., Inc. 30350 Bruce Industrial Pkwy. Solon, OH 44139 USA
Phone: 888-876-2611 mail@ohiolumex.com

Deactivated glass and glass wool Impregnated Activated Carbon – Refer to SDS

Best Before: January 2020

© Mostardi Platt

MERCURY SORBENT TRAP FIELD DATA SHEET

Project Name/Number: M17 3006 Northern Metals LLC
Sampling Location: Common Stack STRU 1 Run Number: 4/3
Date: 8/1/17 Barometric Pressure:
Source Condition: Normal Test Engineer: AJ
Dry Gas Meter No. M2 Y = 0.998 Trap Number OLC050912

Sample Train A

	Clock Time 24 hour	Stack Temp. °F	Sorbent Trap Temp. °F	Meter Temp. (t_m) °F	Meter Volume (V_m) liters	Meter Vacuum, "Hg
12	12:50	109	250	99	0	2
12	12:55	110	252	98	2.754	2
13	13:00	112	252	98	5.526	2
13	13:05	113	253	98	8.264	2
13	13:10	112	253	97	10.998	2
13	13:15	112	253	97	13.764	2
13	13:20	113	252	98	16.509	2
13	13:25	113	252	98	19.258	2
13	13:30	112	253	98	22.010	2
13	13:35	112	252	99	24.750	2
13	13:40	113	253	99	27.509	2
13	13:45	113	253	100	30.246	2
13	13:50	112	254	101	33.062	2
	Total/Average		252.46	98.46		

Dry Gas Meter No. M2 Y = 1.000 Trap Number OL333669 Spike Value 50 ng

Sample Train B

	Clock Time 24 hour	Stack Temp. °F	Sorbent Trap Temp. °F	Meter Temp. (t_m) °F	Meter Volume (V_m) liters	Meter Vacuum, "Hg
12	12:50	109	250	93	0	2
12	12:55	110	252	94	2.765	2
13	13:00	112	252	94	5.496	2
13	13:05	113	253	94	8.296	2
13	13:10	112	253	94	11.005	2
13	13:15	112	253	94	13.759	2
13	13:20	113	252	95	16.502	2
13	13:25	113	252	95	19.254	2
13	13:30	112	253	95	22.004	2
13	13:35	112	252	96	24.753	2
13	13:40	113	253	97	27.513	2
13	13:45	113	253	98	30.251	2
13	13:50	112	254	99	33.006	2
	Total/Average		252.46	95.23		

Train A: Pre-Test Leak Check – Pass @ 10 "Hg
Post-Test Leak Check – Pass @ 15 "Hg
Train B: Pre-Test Leak Check – Pass @ 10 "Hg
Post-Test Leak Check – Pass @ 15 "Hg

Trap ID

OLC050912

OHIO LUMEX

Sorbent Trap Chain of Custody Form

☒ **Unspiked** ☐ **Spiked At:**_____

Spiking Method Cold Vapor Adsorption Via Impinger Sparging
Certified Accuracy ± 10%, Traceable to NIST

QA/QC Signature (Trap Maker) M B

QA/QC Signature (Spiker)_____

Production Lot: U-A06 Carbon Lot: NC

☐High Flow ☐Coil Pre-filter ☐240 mm
☐Static Pre-filter ☐AGS ☐300 mm
☐Fluffy Pre-filter ☒185 mm ☐450 mm

Spike Date:_____ Spike Time:_____

Type of Trap: 30B

TO BE FILLED OUT BY SAMPLING TECHNICIAN

Plant/Source: Northern Metals LLC

PRE-Run Leak Check (circle one): PASS FAIL

Boiler ID: _____

Run START: 8/1/17 (Date) 12:50 (Time)

Sampling Location: Stack (stack, FGD inlet, etc.)

Run Number (optional): 4 5

Run END: 8/1/17 (Date) 13:50 (Time)

Sampling Train (circle one): A B

POST-Run Leak Check (circle one): PASS FAIL

Notes: _____

SAMPLING CONDITIONS AND PARAMETERS

Ave Duct Temp (F°): _____

Estimated Ave Hg Concentration (µg/dscm): _____

Ave Trap Temp (F°): _____

Circle Event if Occurred During Sampling:

STARTUP SHUTDOWN

Ave Flow Rate (cc/min): _____

Total Volume (L)_____ or (dscm):_____

For CEMENT KILNS Only

No. of RAW MILL OFF Events During Sampling: _____

REQUIRED IF RETURNING TO OHIO LUMEX FOR ANALYSIS

Estimated Hg Mass in Section 1 of Sorbent Trap (ng): _____

Note: Analyzer calibration range will be set based on this value. Leaving this blank may result in out-of-calibration analysis. Please contact us if you require assistance estimating this value.

Chain Of Custody

Signatures along with Date/Time required for insertion, removal, lab receiving and lab analysis of trap.

	Signature	Date	Time	Security Seal
Trap inserted by				**If Applicable** Place Chain of Custody seal here (See Security Seal Instruction Sheet)
Trap removed and sealed by				
Courier/Other (If Applicable)				Seal intact as received Yes ☐ No ☐
Courier/Other (If Applicable)				Seal intact as received Yes ☐ No ☐
Trap received by lab				Seal intact as received Yes ☐ No ☐
Trap analyzed by				Seal intact as received Yes ☐ No ☐

Make sure all of your sampling conditions prevent moisture condensation in the trap media. Moisture condensation is a major cause of breakthrough and spike loss in sorbent traps and should be prevented at all costs.

Ohio Lumex Co., Inc. 30350 Bruce Industrial Pkwy. Solon, OH 44139 USA
Phone: 888-876-2611 mail@ohiolumex.com

Deactivated glass and glass wool Impregnated Activated Carbon – Refer to SDS

Best Before: May 2020

© Mostardi Platt

Trap ID

OL333669

OHIO LUMEX

Sorbent Trap Chain of Custody Form

☐ **Unspiked** ☒ **Spiked At:** 50ng

Certified Accuracy ± 10%, Traceable to NIST

QA/QC Signature (Trap Maker) _____

QA/QC Signature (Spiker) _____

Production Lot: S-11EE Carbon Lot: RC

☐High Flow ☐Coil Pre-filter ☐240 mm
☐Static Pre-filter ☐AGS ☐300 mm
☐Fluffy Pre-filter ☒185 mm ☐450 mm

Spike Date: 3/24/2016 Spike Time: 1655

Type of Trap: 30B

Plant/Stack		Notes	
STMMS ID (check box)	Primary STMMS ☐	Backup STMMS ☐	Tester ☐
Trap A or B (check box)	Trap A ☐ Trap B ☒	Sampling System Manufacturer (check box)	Altech ☐
RATA Run Number (For RATA only)		Apex ☐ Clean Air ☐ Environmental Supply ☐ M&C ☐ Ohio Lumex ☐	
Trap Inserted/Pre-Leak Check (CEMS Date/Time)		Pre-Leak Check (check box)	
Date	Time	Pass ☐ Fail ☐	
Sample Collection Start (CEMS Date/Time)		Duct Temp. (°F)	
Date	Time	Sorbent Trap Temp. (°F)	
Sample Collection End (CEMS Date/Time)		Average Flow Rate (cc/min)	
Date	Time	Total Volume (L)	
Post-Leak Check/Trap Removed (CEMS Date/Time)		Post-Leak Check (check box)	
Date	Time	Pass ☐ Fail ☐	
Startup Event and/or Shutdown Event occurred (check box)		Startup Event ☐	Shutdown Event ☐
Estimated Hg Concentration (µg/dscm)		**Estimated Hg in Section 1**	

If thermal desorption is used for analysis, an estimated Hg mass is required for sample acceptance.
If no estimated mass is provided, the spike mass will be used as the estimate. Results are guaranteed between 20% and 300% of the estimate.

For Cement Kilns	Indicate number of Raw Mill Off events during this sample run: _____

Chain Of Custody

Signatures along with Date/Time required for insertion, removal, lab receiving and lab analysis of trap.

	Signature	Date	Time	Security Seal
Trap inserted by				**If Applicable** Place Chain of Custody seal here (See Security Seal Instruction Sheet)
Trap removed and sealed by				
Trap received by lab				Seal intact as received Yes ☐ No ☐
Trap analyzed by				Seal intact as received Yes ☐ No ☐

Make sure all of your sampling conditions prevent moisture condensation in the trap media. Moisture condensation is a major cause of breakthrough and spike loss in sorbent traps and should be prevented at all costs.

For Analysis contact us:

Ohio Lumex Co., Inc. 9263 Ravenna Road Unit A-3, Twinsburg, OH 44087 USA
Phone 330-405-0837 Fax 330-405-0847 US Toll Free: 888-876-2611

Best Before: March 2019

Impregnated Activated Carbon - Refer to MSDS
Deactivated glass and glass wool

© Mostardi Platt

MERCURY SORBENT TRAP FIELD DATA SHEET

Project Name/Number: M17 3006 Northern Metals
Sampling Location: Common Stack STRU 1 Run Number: 5/4
Date: 8/1/17 Barometric Pressure:
Source Condition: Normal Test Engineer: AJ
Dry Gas Meter No. M2 Y = 0.998 Trap Number OL050919

Sample Train A					
Clock Time 24 hour	Stack Temp. °F	Sorbent Trap Temp. °F	Meter Temp. (t_m) °F	Meter Volume (V_m) liters	Meter Vacuum, "Hg
15:10	119	256	98	0	2
15:15	111	255	98	2.759	2
15:20	111	254	97	5.572	2
15:25	109	254	96	8.253	2
15:30	109	253	95	11.002	2
15:35	109	253	96	13.756	2
15:40	109	254	96	16.505	2
15:45	108	254	96	19.257	2
15:50	109	254	96	22.009	2
15:55	109	253	96	24.758	2
16:00	108	253	97	27.560	2
16:05	108	253	97	30.251	2
16:10	108	253	97	33.002	2
Total/Average		253.77	96.54		

Dry Gas Meter No. M2 Y = 1.000 Trap Number OL387833 Spike Value .50 ng

Sample Train B					
Clock Time 24 hour	Stack Temp. °F	Sorbent Trap Temp. °F	Meter Temp. (t_m) °F	Meter Volume (V_m) liters	Meter Vacuum, "Hg
15:10	119	256	95	0	2
15:15	111	255	95	2.756	2
15:20	111	254	94	5.579	2
15:25	109	254	94	8.256	2
15:30	109	253	94	11.006	2
15:35	109	253	94	13.753	2
15:40	109	254	95	16.506	2
15:45	108	254	94	19.253	2
15:50	109	254	95	22.005	2
15:55	109	253	95	24.756	2
16:00	108	253	96	27.557	2
16:05	108	253	96	30.257	2
16:10	108	253	96	33.005	2
Total/Average		253.77	94.85		

Train A: Pre-Test Leak Check – Pass @ 10 "Hg
Post-Test Leak Check – Pass @ 15 "Hg
Train B: Pre-Test Leak Check – Pass @ 10 "Hg
Post-Test Leak Check – Pass @ 15 "Hg

Trap ID

OLC050919

OHIO LUMEX

Sorbent Trap Chain of Custody Form

☒ **Unspiked** ☐ **Spiked At:**_____

Spiking Method Cold Vapor Adsorption Via Impinger Sparging
Certified Accuracy ± 10%, Traceable to NIST

QA/QC Signature (Trap Maker) M B

QA/QC Signature (Spiker)_____

Production Lot: U-A06 Carbon Lot: NC

☐High Flow ☐Coil Pre-filter ☐240 mm
☐Static Pre-filter ☐AGS ☐300 mm
☐Fluffy Pre-filter ☒185 mm ☐450 mm

Spike Date:_____ Spike Time:_____

Type of Trap: 30B

TO BE FILLED OUT BY SAMPLING TECHNICIAN

Plant/Source: Northern Metals LLC

PRE-Run Leak Check (circle one): (PASS) FAIL

Boiler ID: _____

Run START: 8/1/17 (Date) 15:10 (Time)

Sampling Location: Stack (stack, FGD inlet, etc.)

Run Number (optional): ~~3~~ 4

Run END: 8/1/17 (Date) 16:10 (Time)

Sampling Train (circle one): (A) B

POST-Run Leak Check (circle one): (PASS) FAIL

Notes: _____

SAMPLING CONDITIONS AND PARAMETERS

Ave Duct Temp (F°): _____

Estimated Ave Hg Concentration (µg/dscm): _____

Ave Trap Temp (F°): _____

Circle Event if Occurred During Sampling:

STARTUP **SHUTDOWN**

Ave Flow Rate (cc/min): _____

Total Volume (L)_____ or (dscm):_____

For CEMENT KILNS Only

No. of RAW MILL OFF Events During Sampling: _____

REQUIRED IF RETURNING TO OHIO LUMEX FOR ANALYSIS

Estimated Hg Mass in Section 1 of Sorbent Trap (ng): _____

Note: Analyzer calibration range will be set based on this value. Leaving this blank may result in out-of-calibration analysis. Please contact us if you require assistance estimating this value.

Chain Of Custody

Signatures along with Date/Time required for insertion, removal, lab receiving and lab analysis of trap.

	Signature	Date	Time	Security Seal
Trap inserted by				**If Applicable** Place Chain of Custody seal here (See Security Seal Instruction Sheet)
Trap removed and sealed by				
Courier/Other (If Applicable)				Seal intact as received Yes ☐ No ☐
Courier/Other (If Applicable)				Seal intact as received Yes ☐ No ☐
Trap received by lab				Seal intact as received Yes ☐ No ☐
Trap analyzed by				Seal intact as received Yes ☐ No ☐

Make sure all of your sampling conditions prevent moisture condensation in the trap media. Moisture condensation is a major cause of breakthrough and spike loss in sorbent traps and should be prevented at all costs.

Ohio Lumex Co., Inc. 30350 Bruce Industrial Pkwy. Solon, OH 44139 USA
Phone: 888-876-2611 mail@ohiolumex.com

Deactivated glass and glass wool Impregnated Activated Carbon – Refer to SDS

Best Before: May 2020

© Mostardi Platt

Trap ID

OL387833

OHIO LUMEX

Sorbent Trap Chain of Custody Form

☐ **Unspiked** ☒ **Spiked At:** 50ng

Spiking Method Cold Vapor Adsorption Via Impinger Sparging
Certified Accuracy ± 10%, Traceable to NIST

QA/QC Signature (Trap Maker) _____

QA/QC Signature (Spiker) _____

Production Lot: S-1A97 **Carbon Lot:** NC

☐High Flow ☐Coil Pre-filter ☐240 mm
☐Static Pre-filter ☐AGS ☐300 mm
☐Fluffy Pre-filter ☒185 mm ☐450 mm

Spike Date: 1/6/2017 **Spike Time:** 0925

Type of Trap: 30B

TO BE FILLED OUT BY SAMPLING TECHNICIAN

Plant/Source: Northern Metals LLC

Boiler ID: _____

Sampling Location: Stack (stack, FGD inlet, etc.)

Run Number (optional): 5 4

Sampling Train (circle one): A (B)

PRE-Run Leak Check (circle one): (PASS) FAIL

Run START: 8/1/17 (Date) 15:10 (Time)

Run END: 8/1/17 (Date) 16:10 (Time)

POST-Run Leak Check (circle one): (PASS) FAIL

Notes: _____

SAMPLING CONDITIONS AND PARAMETERS

Ave Duct Temp (F°): _____

Ave Trap Temp (F°): _____

Ave Flow Rate (cc/min): _____

Total Volume (L) _____ or (dscm): _____

Estimated Ave Hg Concentration (µg/dscm): _____

Circle Event if Occurred During Sampling:

STARTUP **SHUTDOWN**

For CEMENT KILNS Only

No. of RAW MILL OFF Events During Sampling: _____

REQUIRED IF RETURNING TO OHIO LUMEX FOR ANALYSIS

Estimated Hg Mass in Section 1 of Sorbent Trap (ng): _____

Note: Analyzer calibration range will be set based on this value. Leaving this blank may result in out-of-calibration analysis. Please contact us if you require assistance estimating this value.

Chain Of Custody

Signatures along with Date/Time required for insertion, removal, lab receiving and lab analysis of trap.

	Signature	Date	Time	Security Seal
Trap inserted by				**If Applicable** Place Chain of Custody seal here (See Security Seal Instruction Sheet)
Trap removed and sealed by				
Courier/Other (If Applicable)				Seal intact as received Yes ☐ No ☐
Courier/Other (If Applicable)				Seal intact as received Yes ☐ No ☐
Trap received by lab				Seal intact as received Yes ☐ No ☐
Trap analyzed by				Seal intact as received Yes ☐ No ☐

Make sure all of your sampling conditions prevent moisture condensation in the trap media. Moisture condensation is a major cause of breakthrough and spike loss in sorbent traps and should be prevented at all costs.

Ohio Lumex Co., Inc. 30350 Bruce Industrial Pkwy. Solon, OH 44139 USA
Phone: 888-876-2611 mail@ohiolumex.com

Deactivated glass and glass wool Impregnated Activated Carbon – Refer to SDS

Best Before: January 2020

© Mostardi Platt

Isokinetic Sampling Cover Sheet

Test Engineer: JJR
Test Technician: JJB

Plant Information

Run Number: 1
Date: 7-26-17
Project Number: M173006
Test Location: Common stack STRU 1
Client Name: Northwest Metals LLC
Plant Name: Pacific Street Yard Facility
Duct Shape: Circular or Rectangular
Length: _____ Width: _____ or Diameter: 5.78
Flue Area: 26.25
Upstream Diameters: 2.00
Downstream Diameters: .5
Port Type: Flange
Port Length: 6.5"
Port Diameter: 6.5
Test Method: 23
Source Condition: normal

Meter and Probe Data

Meter ID: 11
Meter Y Value: .993
ΔH Value: 1.747
Pitot ID: 48
Pitot Coefficient: .84
Train Type: Anderson
Nozzle ID # Glass 10
Nozzle Diameter: .202
Filter Number/Weight: _____
Probe Length: 7
Probe Liner: glass
Thimble Number/Weight: _____
Pre-Test Nozzle Leak Check: .003 @ 15 "Hg
Post-Test Nozzle Leak Check: .001 @ 12 "Hg
Pre-Test Pitot Leak Check: 1 @ 5 "H_2O
Post-Test Pitot Leak Check: ✓ @ 4.7 "H_2O

Traverse Data

Ports Sampled: 2
Points/Port: 12
Min/Point: 10
Total Points: 24
Total Test Time: 240
Sample Plane: Horizontal or Vertical

Stack Parameters

Barometric Pressure: 29.77
Static Pressure: .6
CO_2 %: ___/___/___/ Avg. 0.0
O_2 %: ___/___/___/Avg. 20.8
Determined by: Method 3 or Method 3A
Imp and/or silica balance Model and S/N: _____
Servomex Serial #: _____
Initial Imp. Volume or Weight: 1943.2
Final Imp. Volume or Weight: 2044.1
Imp. Volume or Weight Gain: 100.9
Initial Silica Weight: 845.6
Final Silica Weight: 896.1
Silica Weight Gain: 50.5

Comments:

© Mostardi Platt

Isokinetic Sampling Field Data Sheet-M23

Project Number: M173006
Client: Northwest Metals LLC
Plant: Pacific Street Yard Facility

Date: 7/26/17
Test Location: common stack STRU1
Test Method: 23

Test Number: 1
Operator: JJR
Test Tech: JJB
Page Number: 1 of 2

Port-Point #.	Time	(ΔP)	Orifice Setting (ΔH)	Meter Volume (V_m) ft^3, Actual	Square Root, ΔP	Meter Rate, Cubic Feet/ Min.	Theoretical Meter Volume, (V_m) ft^3, per point	Theoretical Meter Volume, (V_m) ft^3, total	Stack Temp, °F	Meter Temp Inlet, °F	Meter Temp Outlet, °F	Pump Vacuum, " Hg	Probe Temp. °F	Filter Temp. °F	CPM Filter Temp °F	Impinger Outlet Well Temp. °F
1-1	10.00	1.8	1.8	67.928					102	73	73	7	248	257	51	51
1	10.05	1.2	2.0	71.80					102	73	73	7	248	252	51	51
2	10.10	1.3	2.1	75.81					103	73	73	7	248	251	51	52
2	10.15	1.3	2.1	80.02					104	73	73	7	250	251	51	55
3	10.17			81.159												
3	10.50	1.2	2.0	81.159					102	73	73	7	251	251	52	54
3	10.53	1.2	2.0	84.08					102	75	74	7	252	252	52	55
4	10.56	1.2	2.0	86.05					102	76	74	7	251	253	55	56
4	11.03	1.0	2.1	92.18					102	77	75	7	253	253	55	56
5	11.08	1.1	1.8	95.86					102	77	75	7	250	253	55	56
5	11.13	1.0	1.7	99.69					102	77	75	7	249	253	55	56
6	11.18	.98	1.6	103.47					103	78	76	7	251	253	54	57
6	11.23	.98	1.6	107.1					103	79	76	7	252	253	54	58
7	11.28	.99	1.6	110.71					103	78	77	7	250	252	54	58
7	11.33	1.0	1.7	114.47					103	78	77	7	253	253	54	59
8	11.38	1.0	1.7	118.15					103	78	77	7	254	253	53	59
8	11.43	1.1	1.7	121.81					103	79	77	7	254	253	54	57
9	11.48	1.1	1.8	125.78					104	80	78	7	253	252	55	54
9	11.53	1.2	2.0	129.66					104	81	78	7	256	252	55	53
10	11.58	1.4	2.3	133.72					105	82	79	7	255	251	51	50
10	12.03	1.3	2.2	138.10					105	83	79	7	254	252	51	51
11	12.08			142.379												
11	12.25	1.3	2.2	142.379					104	85	85	7	255	252	53	53
11	12.30	1.2	2.0	146.61					104	86	86	7	255	254	54	54
12	12.35	1.3	2.2	150.04					104	87	87	7	254	253	55	55
12	12.40	1.3	2.2	155.03					104	87	87	7	256	253	55	56
	12.45			159.311												
2-1	12.50	1.7	2.8	159.311					104	83	84	9	250	252	51	50

Project No. M173006 Rev. 1
Common Stack (STRU1)

192 of 812

© Mostardi Platt

Isokinetic Sampling Field Data Sheet-M23

Project Number: M173006
Client: Northern Metals LLC
Plant: Paine Street Yard Facility

Date: 7/26/17
Test Location: common stack STRU1
Test Method: 23

Test Number: 1
Operator: JJR
Test Tech: JJR
Page Number: 2 of 2

Port-Point #.	Time	(ΔP)	Orifice Setting (ΔH)	Meter Volume (V_m) ft^3, Actual	Square Root, ΔP	Meter Rate, Cubic Feet/ Min.	Theoretical Meter Volume, (V_m) ft^3, per point	Theoretical Meter Volume, (V_m) ft^3, total	Stack Temp, °F	Meter Temp Inlet, °F	Meter Temp Outlet, °F	Pump Vacuum, " Hg	Probe Temp. °F	Filter Temp. °F	CPM Filter Temp °F	Impinger Outlet Well Temp. °F
2-1	1255	1.7	2.8	164.20					105	84	83	9	253	251	51	51
2	13.00	1.0	2.8	169.10					108	85	83	9	252	251	52	51
2	13.05	1.6	2.7	173.52					105	85	83	9	253	252	52	52
3	13.10	1.5	2.5	178.51					106	85	83	9	253	252	52	52
3	13.15	1.6	2.7	183.09					106	86	87	9	252	252	52	52
4	13.20	1.6	2.7	187.90					105	87	84	9	254	253	52	53
4	13.25	1.5	2.5	192.670					105	87	84	9	253	253	52	54
5	13.30	1.3	2.2	197.23					105	87	84	10 8	253	252	52	55
5	13.35	1.4	2.3	201.50					106	88	84	10 8	252	253	53	55
6	13.40	1.2	2.0	205.97					106	88	84	8	252	253	55	56
6	13.45	1.2	2.0	210.01					106	88	84	7	253	254	53	57
7	13.50	.98	1.6	214.19					106	87	84	7	253	255	53	58
7	13.55	.96	1.6	217.64					106	88	84	7	251	255	53	58
8	14.00	1.0	1.7	221.658					106	88	84	7	252	254	55	59
	14.05			225.319												
8	14.12	1.1	1.8	225.319					104	88	84	7	250	254	55	59
	14.17			229.267												
9	14.35	1.0	1.7	229.267					103	83	84	7	252	254	55	59
9	14.40	1.2	2.0	233.06					104	84	83	7	250	251	54	57
10	14.45	1.3	2.2	237.18					104	85	83	7	250	253	54	57
10	14.50	1.3	2.2	241.41					104	85	84	8	250	251	54	55
11	14.55	1.5	2.5	245.69					104	88	83	8	249	252	56	56
11	15.00	1.4	2.3	250.21					104	88	84	8	249	250	55	57
12	15.05	1.5	2.5	254.75					104	87	84	8	247	252	56	58
12	15.10	1.6	2.7	259.33					104	88	84	8	251	254	56	59
	15.15			264.076												

© Mostardi Platt

IMPINGER WEIGHT SHEET

PLANT: Northw. metals

UNIT NO: Shredder

LOCATION: Stack

DATE: 7/25/17

TEST NO: 1

METHOD: 23

WEIGHED/MEASURED BY: JFK

BALANCE ID: S/O - 18

(1) 23

Circle One:	FINAL WEIGHT MLS / GRAMS	INITIAL WEIGHT MLS / GRAMS	IMPINGER GAIN	IMPINGER CONTENTS
IMPINGER 1	623.2	520.8		
IMPINGER 2	747.0	756.8		
IMPINGER 3	673.9	665.6		
IMPINGER 4	896.1	845.6		
IMPINGER 5				
IMPINGER 6				
IMPINGER 7				
IMPINGER 8				

	FINAL TOTAL	INITIAL TOTAL	TOTAL IMPINGER GAIN
IMPINGERS	2644.1	1943.2	100.9
SILICA	896.1	845.6	50.5

Trap # 5

Isokinetic Sampling Cover Sheet

Test Engineer: JJR
Test Technician: JJB

Plant Information

Run Number: 2
Date: 7/27/17
Project Number: M173000
Test Location: Common Stack STRU1
Client Name: Northern Metals LLC
Plant Name: Pacific Street Yard Facility
Duct Shape: Circular or Rectangular
Length: – Width: – or Diameter: 5.78'
Flue Area: 26.25
Upstream Diameters: 2
Downstream Diameters: .500
Port Type: Nipple
Port Length: 6.5
Port Diameter: 6.5
Test Method: 23
Source Condition: Normal

Meter and Probe Data

Meter ID: 11
Meter Y Value: .993
ΔH Value: 1.747
Pitot ID: ~~[illegible]~~ 48
Pitot Coefficient: .840
Train Type: Anderson
Nozzle ID #
Nozzle Diameter: .202
Filter Number/Weight:
Probe Length: 7
Probe Liner: glass
Thimble Number/Weight:
Pre-Test Nozzle Leak Check: .003 @ 15 "Hg
Post-Test Nozzle Leak Check: .005 @ 13 "Hg
Pre-Test Pitot Leak Check: ✓ 0 5 "H_2O
Post-Test Pitot Leak Check: ✓ 0 6 "H_2O

Traverse Data

Ports Sampled: 2
Points/Port: 12
Min/Point: 10
Total Points: 24
Total Test Time: 240
Sample Plane: Horizontal or Vertical

Stack Parameters

Barometric Pressure: 29.14
Static Pressure: -6
CO_2 %: / / / Avg. 0.0
O_2 %: / / /Avg. 20.8
Determined by: Method 3 or Method 3A
Imp and/or silica balance Model and S/N: 16419
Servomex Serial #:
Initial Imp. Volume or Weight: ~~[illegible]~~ 1697.6
Final Imp. Volume or Weight: 1797.6
Imp. Volume or Weight Gain: 100.7
Initial Silica Weight: 971.0
Final Silica Weight: 1007.9
Silica Weight Gain: 36.9

Comments:

© Mostardi Platt

Isokinetic Sampling Field Data Sheet-M23

Project Number: M173006 | Date: 7/27/17 | Test Number: 2

Client: Northern Metals LLC | Test Location: Common stack STRU4 | Operator: JJR | Test Tech: JJB

Plant: Pierrepont street Yard Facility | Test Method: 23 | Page Number: 1 of 2

Port-Point #.	Time	(ΔP)	Orifice Setting (ΔH)	Meter Volume (V_m) ft^3, Actual	Square Root, ΔP	Meter Rate, Cubic Feet/ Min.	Theoretical Meter Volume, (V_m) ft^3, per point	Theoretical Meter Volume, (V_m) ft^3, total	Stack Temp, °F	Meter Temp Inlet, °F	Meter Temp Outlet, °F	Pump Vacuum, " Hg	Probe Temp. °F	Filter Temp. °F	CPM Filter Temp °F	Impinger Outlet Well Temp. °F
1-1	7.20	1.8	3.0	64.770					95	66	68	7	248	256	48	48
1	7.25	1.7	2.8	69.75					95	67	66	7	249	254	48	48
2	7.30	1.6	2.6	74.52					95	66	68	7	250	251	48	49
2	7.35	1.7	2.8	79.29					95	70	69	7	247	254	48	50
3	7.40	1.4	2.3	84.10					95	70	69	7	251	253	49	51
3	7.45	1.5	2.5	88.50					96	71	69	7	250	253	49	51
4	7.50	1.5	2.5	93.00					97	71	68	7	252	250	49	52
4	7.55	1.4	2.3	97.62					97	70	69	7	247	251	49	53
	8.00			102.009												
5	8.40	1.2	2.0	102.004					95	73	70	7	249	251	51	55
5	8.45	1.3	2.2	106.100					96	74	71	6	250	254	51	56
6	8.50	1.2	2.0	110.37					96	74	71	6	253	255	51	57
6	8.55	1.2	2.0	114.47					97	75	71	6	247	257	52	56
7	9.00	.99	1.6	118.54					97	78	73	6	254	255	52	59
7	9.05	.99	1.6	122.27					98	79	73	6	250	254	49	59
8	9.10	.98	1.6	126.00					99	79	74	6	247	251	49	54
8	9.15	1.0	1.7	129.77					100	80	75	7	250	255	49	50
9	9.20	.97	1.6	133.43					100	80	75	7	251	253	49	51
9	9.25	1.0	1.7	137.26					102	81	76	7	254	253	49	52
10	9.30	1.3	2.2	140.91					101	82	77	7	251	253	47	53
10	9.35	1.2	2.0	145.29					102	82	79	7	250	254	47	54
11	9.40	1.2	2.0	149.33					102	82	80	7	251	253	47	54
11	9.45	1.3	2.2	153.50					103	83	80	7	249	253	47	54
12	9.50	1.3	2.2	157.75					103	84	81	7	249	257	47	55
12	9.55	1.2	2.0	162.10					103	85	81	7	251	257	46	56
	10.00			166.249												

Project No. M173006 Rev. 1
Common Stack (STRU4)
196 of 312
© Mostardi Platt

Isokinetic Sampling Field Data Sheet-M23

Project Number: M173006 | Date: 7/27/17 | Test Number: 2

Client: Northern Metals LLC | Test Location: common Stack STRU1 | Operator: JSR | Test Tech: JSR

Plant: Pacific street Yard facility | Test Method: 23 | Page Number: 2 of 2

Port-Point #.	Time	(ΔP)	Orifice Setting (ΔH)	Meter Volume (V_m) ft^3, Actual	Square Root, ΔP	Meter Rate, Cubic Feet/ Min.	Theoretical Meter Volume, (V_m) ft^3, per point	Theoretical Meter Volume, (V_m) ft^3, total	Stack Temp, °F	Meter Temp Inlet, °F	Meter Temp Outlet, °F	Pump Vacuum, " Hg	Probe Temp. °F	Filter Temp. °F	CPM Filter Temp °F	Impinger Outlet Well Temp. °F
21	10.05	1.5	2.5	166.249					104	84	81	7	247	253	45	54
1	10.10	1.4	2.3	170.67					102	84	81	7	249	255	45	54
1	10.15	1.2	2.0	175.92					100	84	82	7	255	256	46	54
2	10.20	1.3	2.2	179.52					101	85	82	7	255	256	46	54
2	10.25	1.2	2.0	183.88					102	85	83	7	251	254	46	55
3	10.30	1.2	2.0	187.94					103	86	83	7	252	254	46	55
3	10.35	1.4	2.3	192.16					102	85	83	7	250	255	46	55
4	10.40	1.3	2.2	196.69					102	85	84	7	247	251	45	55
4	10.45	1.1	1.8	200.96					102	86	85	7	254	256	45	55
5	10.50	1.3	2.2	204.91					102	87	85	7	251	256	45	55
5	10.50	1.2	2.0	209.33					102	88	86	7	249	252	46	56
6	11.00	1.0	1.7	213.50					103	88	86	7	255	251	46	56
6	11.05	1.3	2.2	217.00					104	88	86	7	251	252	46	55
7	11.10	1.3	2.2	221.61					105	89	87	7	253	257	47	56
7	11.15	1.2	2.0	225.92					105	89	87	7	251	255	48	57
8	11.20	1.3	2.2	230.19					105	89	87	7	255	252	46	54
	11.25			234.509												
9	11.40	1.2	2.0	234.509					104	90	87	7	255	253	46	54
	11.45			238.610												
9	11.52	1.1	1.9	238.610					102	89	88	7	251	253	47	54
10	11.57	1.0	1.7	242.60					102	90	89	7	257	244	47	57
10	12.02	.97	1.6	246.49					102	90	88	7	256	252	47	55
11	12.07	.94	1.7	250.22					102	91	88	7	254	251	47	55
11	12.12	1.0	1.7	254.05					102	91	89	7	256	250	47	56
12	12.17	1.2	2.0	257.88					102	91	89	7	251	250	47	56
12	12.22	1.0	1.7	262.05					102	90	89	7	247	251	47	57
	12.27			265.904												

Project No. M173006 Rev. 1
Common Stack (STRU1)

© Mostardi Platt

IMPINGER WEIGHT SHEET

PLANT: Northern Metals

UNIT NO: Shredder

LOCATION: Stack

(2) M23

DATE: 7/25/17

TEST NO: 2

METHOD: 23

WEIGHED/MEASURED BY: JFK

BALANCE ID: S10-18

Circle One:	FINAL WEIGHT MLS / GRAMS	INITIAL WEIGHT MLS / GRAMS	IMPINGER GAIN	IMPINGER CONTENTS
IMPINGER 1	503.8	402.2		
IMPINGER 2	763.1	771.2		
IMPINGER 3	530.7	521.5		
IMPINGER 4	1007.9	970.0		
IMPINGER 5				
IMPINGER 6				
IMPINGER 7				
IMPINGER 8				

IMPINGERS _____ FINAL TOTAL _____ INITIAL TOTAL _____ TOTAL IMPINGER GAIN

SILICA _____ FINAL TOTAL _____ INITIAL TOTAL _____ TOTAL SILICA GAIN

© Mostardi Platt

Trail #2

Isokinetic Sampling Cover Sheet

Test Engineer: JJR
Test Technician: JJR

Plant Information

Run Number: 3
Test Location: Common Stack STRU1
Duct Shape: Circular or Rectangular
Flue Area: 26.25
Port Type: nipple
Test Method: 23

Date: 7/27/17
Client Name: Vertum Metals LLC
Length: — Width: — or Diameter: 6.75
Upstream Diameters: 2
Port Length: 6.5
Source Condition: normal

Project Number: M173006
Plant Name: Pacific Street Yard Facility
Downstream Diameters: .50
Port Diameter: 6.5

Meter and Probe Data

Meter ID: 11
Pitot ID: 45
Nozzle ID #
Probe Length:
Pre-Test Nozzle Leak Check: .004 @ 15 "Hg
Pre-Test Pitot Leak Check: ✓ 0 6 "H_2O

Meter Y Value: .993
Pitot Coefficient: .840
Nozzle Diameter: .202
Probe Liner:

ΔH Value: 1.747
Train Type: Anderson
Filter Number/Weight:
Thimble Number/Weight:
Post-Test Nozzle Leak Check: .004 @ 12 "Hg
Post-Test Pitot Leak Check: ✓ 0 7 "H_2O

Traverse Data

Ports Sampled: 2
Total Points: 24

Points/Port: 12
Total Test Time: 240

Min/Point: 10
Sample Plane: Horizontal or Vertical

Stack Parameters

Barometric Pressure: 29.14
CO_2 %: / / / Avg. 0.0
Imp and/or silica balance Model and S/N:
Initial Imp. Volume or Weight: 1722.1
Initial Silica Weight: 999.4

Static Pressure: .6
O_2 %: / / / Avg. 20.9
Final Imp. Volume or Weight: 1797.6
Final Silica Weight: 1007.9

Determined by: Method 3 or Method 3A
Servomex Serial #:
Imp. Volume or Weight Gain: 75.5
Silica Weight Gain: 8.5

JJR

Comments:

© Mostardi Platt

Isokinetic Sampling Field Data Sheet-M23

Project Number: M173006 | Date: 7/27/16 | Test Number: 3

Client: Northern Metals LLC | Test Location: Common stack STRU1 | Operator: JJR | Test Tech: JJB

Plant: Pacific Street Yard Facility | Test Method: 23 | Page Number: 1 of 2

Port-Point #.	Time	(ΔP)	Orifice Setting (ΔH)	Meter Volume (V_m) ft^3, Actual	Square Root, ΔP	Meter Rate, Cubic Feet/ Min.	Theoretical Meter Volume, (V_m) ft^3, per point	Theoretical Meter Volume, (V_m) ft^3, total	Stack Temp, °F	Meter Temp Inlet, °F	Meter Temp Outlet, °F	Pump Vacuum, " Hg	Probe Temp. °F	Filter Temp. °F	CPM Filter Temp °F	Impinger Outlet Well Temp. °F
1-1	12.55	1.7	2.9	67.333					100	90	90	6	245	255	47	58
1	13.00	1.8	3.1	72.33					100	90	90	6	247	254	47	51
2	13.05	1.6	2.7	77.50					100	92	90	6	251	551	47	51
2	13.10	1.7	2.9	82.32					100	92	90	6	250	250	47	51
3	13.15	1.5	2.6	87.43					100	90	90	6	249	250	47	51
3	13.20	1.5	2.6	92.10					101	92	90	6	250	250	47	52
4	13.25	1.3	2.2	96.81					102	93	91	6	251	251	47	53
4	13.30	1.3	2.2	101.20					103	93	90	6	255	255	47	53
5	13.35	1.3	2.2	105.58					102	94	91	6	256	257	47	53
5	13.40	1.2	2.0	110.00					103	95	91	5	251	251	47	53
6	13.45	1.0	1.7	114.15					102	95	91	5	254	250	48	54
6	13.50	1.0	1.7	118.09					102	95	92	5	257	247	48	55
7	13.55	.98	1.7	121.95					101	95	91	6	258	254	47	56
7	14.00	.99	1.7	125.77					100	94	91	6	252	257	47	57
8	14.05	.96	1.6	129.54					103	94	90	6	257	249	47	57
8	14.10	.98	1.7	133.32					104	94	90	7	251	250	46	58
9	14.15	.97	1.7	137.14					103	95	91	7	255	256	46	59
9	14.20	.99	1.7	140.97					104	95	90	6	254	251	48	59
10	14.25	1.0	1.7	144.78					105	95	90	6	258	253	48	59
10	14.30	.98	1.7	[illegible]					105	95	91	6	253	254	49	59
	14.35			152.135												
11	14.55	.98	1.7	152.135					102	92	90	6	250	255	49	59
11	15.00	.99	1.7	156.24					102	92	91	7	250	256	49	59
12	15.05	1.0	1.7	160.09					102	94	90	7	251	257	49	51
12	15.10	1.2	1.7	163.95					102	94	90	7	252	258	50	59
	15.15			168.132												
2-1	15.18	1.5	2.6	168.132					102	94	90	7	251	258	50	59
1	15.23	1.3	2.2	172.68					101	93	89	7	252	257	51	58
	15.26			177.231												

Project No. M173006 Rev. 1
Common Stack (STRU1)
200 of 312
© Mostardi Platt

IMPINGER WEIGHT SHEET

PLANT: Northern Michigan

UNIT NO: Shredder

LOCATION: Stack

DATE: 7/27/17

TEST NO: 3

METHOD: 23

WEIGHED/MEASURED BY: JFR

BALANCE ID: S10-18

(3) M23
Aborted Test

Circle One:	FINAL WEIGHT MLS / GRAMS	INITIAL WEIGHT MLS / GRAMS	IMPINGER GAIN	IMPINGER CONTENTS
IMPINGER 1	612.7	564.5	48.2	
IMPINGER 2	600.6	582.3	18.3	
IMPINGER 3	584.3	575.3	9.0	
IMPINGER 4	1007.9	999.4	8.5	
IMPINGER 5				
IMPINGER 6				
IMPINGER 7				
IMPINGER 8				

	FINAL TOTAL	INITIAL TOTAL	TOTAL IMPINGER GAIN
IMPINGERS	1797.6	1722.1	75.5
SILICA	1007.9	999.4	8.5

© Mostardi Platt

Isokinetic Sampling Cover Sheet

Test Engineer: AJH
Test Technician: _____

Plant Information

Run Number: 3
Date: 8/1/17
Project Number: M173006
Test Location: Common Stack STRU1
Client Name: Northern Metals LLC
Plant Name: Pacific Street Yard Facility
Duct Shape: Circular or Rectangular
Length: / Width: / or Diameter: 5.781'
Flue Area: 26.25 sqft
Upstream Diameters: 0.5
Downstream Diameters: 2
Port Type: Flange
Port Length: 6.5"
Port Diameter: 6.5"
Test Method: 23
Source Condition: Normal

Meter and Probe Data

Meter ID: CM11
Meter Y Value: 0.993
ΔH Value: 1.747
Pitot ID: 48B
Pitot Coefficient: 0.84
Train Type: Anderson
Nozzle ID # 211
Nozzle Diameter: 0.202
Filter Number/Weight: N/A
Probe Length: 7'
Probe Liner: Glass
Thimble Number/Weight: N/A
Pre-Test Nozzle Leak Check: Pass @ 10 "Hg
Post-Test Nozzle Leak Check: 0.003 @ 8 "Hg
Pre-Test Pitot Leak Check: ✓ @ 5.1 "H_2O
Post-Test Pitot Leak Check: ✓ @ 5.3 "H_2O

Traverse Data

Ports Sampled: 2
Points/Port: 12
Min/Point: 10
Total Points: 24
Total Test Time: 240
Sample Plane: Horizontal or Vertical

Stack Parameters

Barometric Pressure: 29.21
Static Pressure: +0.6
CO_2 %: / / / Avg. 0.0
O_2 %: / / /Avg. 20.8
Determined by: Method 3 or Method 3A
Imp and/or silica balance Model and S/N: S10-18
Servomex Serial #: ECON #3
Initial Imp. Volume or Weight: 1694.3
Final Imp. Volume or Weight: 1777.2
Imp. Volume or Weight Gain: 82.9
Initial Silica Weight: 409.1
Final Silica Weight: 1008.1
Silica Weight Gain: 39.0

Comments:

© Mostardi Platt

Isokinetic Sampling Field Data Sheet-M23

Project Number: M173006 Date: 8/1/17 Test Number: 3
Client: Northern Metals LLC Test Location: Common Stack STRU2 Operator: AJH Test Tech:
Plant: Pacific Street Yard Facility Test Method: 23 Page Number: 1 of 2

4.719 0.761

Port-Point #.	Time	(ΔP)	Orifice Setting (ΔH)	Meter Volume (V_m) ft³, Actual	Square Root, ΔP	Meter Rate, Cubic Feet/ Min.	Theoretical Meter Volume, (V_m) ft³, per point	Theoretical Meter Volume, (V_m) ft³, total	Stack Temp, °F	Meter Temp Inlet, °F	Meter Temp Outlet, °F	Pump Vacuum, " Hg	Probe Temp. °F	Filter Temp. °F	Coil ~~CPM~~ Filter Temp. °F	Impinger Outlet Well Temp. °F
1-1a	935	1.7	2.9	74.089	1.304	0.992	4.961	—	93	77	77	6	240	249	66	62
1-1b	940	1.5	2.6	79.42	1.225	0.932	4.660	79.050	94	77	77	6	242	250	64	65
1-2a	945	1.4	2.4	83.93	1.183	0.900	4.502	83.710	94	79	77	5	246	250	64	65
1-2b	950	1.4	2.4	88.27	1.183	0.900	4.502	88.212	94	80	77	4	249	250	64	66
1-3a	955	1.2	2.1	92.94	1.095	0.834	4.168	92.714	95	81	78	4	249	253	62	65
1-3b	1000	1.2	2.1	96.68	1.095	0.834	4.168	96.882	95	82	79	4	251	250	62	65
1-4a	1005	1.2	2.1	101.87	1.095	0.834	4.168	101.050	96	83	80	4	246	248	61	65
1-4b	1010	1.1	1.9	105.06	1.049	0.751	3.755	105.218	96	84	80	4	240	245	59	64
1-5a	1015	1.2	2.1	109.02	1.095	0.834	4.168	108.973	97	84	80	5	242	250	59	64
1-5b	1020	1.2	2.1	113.05	1.095	0.834	4.168	113.141	97	85	81	4	243	251	59	64
1-6a	1025	1.4	2.4	117.43	1.183	0.900	4.502	117.309	98	85	81	5	248	257	59	65
1-6b	1030	1.2	2.1	121.92	1.095	0.834	4.168	121.811	99	86	82	5	251	250	58	65
1-7a	1035	1.3	2.2	125.86	1.140	0.868	4.338	125.979	100	86	82	5	251	250	58	66
1-7b	1040	1.3	2.2	130.41	1.140	0.868	4.338	130.317	100	88	83	4	248	253	59	66
1-8a	1045	1.2	2.1	134.52	1.095	0.834	4.168	134.655	100	88	83	4	248	253	59	65
1-8b	1050	1.3	2.2	138.67	1.140	0.868	4.338	138.823	101	89	85	5	258	253	60	64
1-9a	1055	1.1	1.9	142.99	1.049	0.751	3.755	143.161	101	89	85	5	250	243	60	64
1-9b	1100	1.1	1.9	146.96	1.049	0.751	3.755	146.916	101	89	85	5	248	251	60	64
1-10a	1105	1.2	2.1	150.81	1.095	0.834	4.168	150.671	101	89	85	5	251	251	60	65
1-10b	1110	1.5	2.6	154.93	1.225	0.932	4.660	154.839	101	90	86	5	254	252	60	65
1-11a	1115	1.5	2.6	159.64	1.225	0.932	4.660	159.499	101	90	86	5	250	247	60	65
1-11b	1120	1.4	2.4	164.03	1.183	0.900	4.502	164.159	101	90	86	5	246	250	61	65
1-12a	1125	1.5	2.6	168.80	1.225	0.932	4.660	168.661	102	90	87	5	253	249	61	65
1-12b	1130	1.5	2.6	173.44	1.225	0.932	4.660	173.321	102	90	87	5	248	249	62	66
	1135			177.869				177.981								

Project No. M173006 Rev. 1
Common Stack (STRU1)
203 of 312
© Mostardi Platt

Isokinetic Sampling Field Data Sheet-M23

Project Number: M173006 Date: 8/1/17 Test Number: 3

Client: Northern Metals LLC Test Location: Common Stack STRU2 Operator: AJH Test Tech:

Plant: Pacific Street Yard Facility Test Method: 23 Page Number: 2 of 2

1.719 0.761

Port-Point #.	Time	(ΔP)	Orifice Setting (ΔH)	Meter Volume (V_m) ft^3, Actual	Square Root, ΔP	Meter Rate, Cubic Feet/ Min.	Theoretical Meter Volume, (V_m) ft^3, per point	Theoretical Meter Volume, (V_m) ft^3, total	Stack Temp, °F	Meter Temp Inlet, °F	Meter Temp Outlet, °F	Pump Vacuum, " Hg	Probe Temp. °F	Filter Temp. °F	CPM Filter Temp °F	Impinger Outlet Well Temp. °F
2-1a	1144	1.8	3.1	177.869	1.342	1.021	5.105	—	102	87	87	6	250	253	64	64
2-1b	1149	1.9	3.3	182.89	1.378	1.049	5.245	182.974	103	89	87	6	243	250	64	63
2-2a	1154	1.8	3.1	188.31	1.342	1.021	5.105	188.219	104	89	87	7	252	249	63	63
2-2b	1159	2.0	3.4	193.21	1.414	1.076	5.381	193.324	104	89	87	6	256	250	63	63
2-3a	1204	1.8	3.1	198.80	1.342	1.021	5.105	198.705	104	88	86	6	248	251	62	64
2-3b	1209	1.9	3.3	203.22	1.378	1.049	5.245	203.810	104	88	86	6	248	250	62	65
2-4a	1214	1.8	3.1	208.86	1.342	1.021	5.105	209.055	103	91	86	6	255	252	62	66
2-4b	1219	1.5	2.6	213.97	1.225	0.932	4.660	214.160	105	91	87	6	248	249	63	65
2-5a	1224	1.2	2.1	218.91	1.095	0.834	4.168	218.820	106	91	87	6	250	251	62	65
2-5b	1229	1.2	2.1	223.04	1.095	0.834	4.168	222.988	108	88	85	5	252	249	62	65
2-6a	1234	1.1	1.9	227.30	1.049	0.798	3.991	227.156	109	86	84	5	243	248	61	64
2-6b	1239	1.1	1.9	231.26	1.049	0.798	3.991	231.147	108	86	85	5	248	250	61	65
2-7a	1244	1.2	2.1	235.22	1.095	0.834	4.168	235.138	107	86	84	4	250	250	61	66
2-7b	1249	1.0	1.7	239.28	1.0	0.761	3.805	239.306	107	86	84	5	250	249	60	66
2-8a	1254	1.1	1.9	243.23	1.049	0.798	3.991	243.111	107	86	84	5	251	250	60	66
2-8b	1259	1.1	1.9	247.07	1.049	0.798	3.991	247.102	109	85	83	5	248	248	60	65
2-9a	1304	1.0	1.7	251.12	1.0	0.761	3.805	251.093	107	85	83	5	245	249	61	66
2-9b	1309	1.0	1.7	254.98	1.0	0.761	3.805	254.898	108	85	83	5	250	249	61	65
2-10a	1314	1.2	2.1	258.66	1.095	0.834	4.168	258.703	108	86	84	5	248	251	61	66
2-10b	1319	1.1	1.9	262.81	1.049	0.798	3.991	262.871	108	86	84	5	255	250	62	65
2-11a	1324	0.95	1.6	266.79	0.975	0.741	3.709	266.862	108	87	85	5	258	250	62	65
2-11b	1329	0.95	1.6	270.80	0.975	0.741	3.709	270.570	108	88	86	5	254	250	62	65
2-12a	1334	0.9	1.5	274.38	0.949	0.722	3.610	274.279	108	89	87	5	255	247	63	65
2-12b	1339	0.9	1.5	277.65	0.949	0.722	3.610	277.889	109	91	87	5	252	249	63	66
	1344			281.465				281.499								

Project No. M173006 Rev. 1
Common Stack (STRU1)
204 of 312
©Mostardi Platt

IMPINGER WEIGHT SHEET

PLANT: Northern Metals

UNIT NO: Shredder

LOCATION: Stack

DATE: 8/1/17

TEST NO: 4

METHOD: 23

WEIGHED/MEASURED BY: JFR

BALANCE ID: 510 - 14

(3) m23
(4)

Circle One:	FINAL WEIGHT MLS / GRAMS	INITIAL WEIGHT MLS / GRAMS	IMPINGER GAIN	IMPINGER CONTENTS
IMPINGER 1	493.7	402.6		
IMPINGER 2	754.6	769.1		
IMPINGER 3	528.9	522.6		
IMPINGER 4	1008.1	969.1		
IMPINGER 5				
IMPINGER 6				
IMPINGER 7				
IMPINGER 8				

	FINAL TOTAL	INITIAL TOTAL	TOTAL IMPINGER GAIN
IMPINGERS	1777.2	1694.3	82.9
SILICA	1008.1	969.1	39.0

© Mostardi Platt

Trap #4

Method 25A Field Data Sheet

Project:	M173006	Operator:	JFK
Client:	Northern Metals	Source:	1.
Location:	Shredder Stack		2.
Date:	8/2/17		3.

Parameters	Location 1	Location 2	Location 3
Test 1			
Time	820 – 919		
VOC ppmv as			
Air flow, scfm			
VOC lbs/hr as			
Removal Efficiency, %			
Test 2	945 – 1045		
Time			
VOC ppmv as			
Air flow, scfm			
VOC lbs/hr as			
Removal Efficiency, %			
Test 3			
Time	1110 – 1209		
VOC ppmv as			
Air flow, scfm			
VOC lbs/hr as			
Removal Efficiency, %			

© Mostardi Platt

Method 25A Calibration Summary

Project:	M173006	Date:	8/2/17
Client:	Northern Metals	Operator:	JFK
Location:	Shredder Stack	Analyzer ID:	1160990215
		Analyzer Range:	500

Cal Run	Cal Level	Test Location	Cylinder ID Serial Number	Cal Gas Type	Cal Time	Expected Cal Value	Actual Response	Difference (% of cal value)	Drift (% of span)	Cylinder Pressure	
Pre 1	Zero			Propane		0.0			N/A	700	
	Low		CC495423	↓		30.47			N/A	1900	2/22/25
	Mid		CC65120	↓		61.08			N/A	1350	3/31/25
	High		CC401614	↓		90.84			N/A	600	8/17/25
Post 1/ Pre 2	Zero			Methane		0.0					
	Low			↓		30.02					
	Mid			↓		60.57					
	High			↓		90.43					
Post 2/ Pre 3	Zero										
	Low										
	Mid										
	High										
Post 3	Zero										
	Low										
	Mid										
	High										
	Zero										
	Low										
	Mid										
	High										
	Zero										
	Low										
	Mid										
	High										

© Mostardi Platt

Volumetric Flow Rate Determination Field Data Sheet

Project Number:	M173006	Date:	8/2/17
Client:	Northern Metals LLC	Test Number:	Pre 1
Test Location:	Common Stack STRU1	Start Time:	0802
Source Condition:	Normal	End Time:	0808
Test Engineer:	AJH	Test Tech:	AJ1

Duct Diameter 5.781 ft
Flue Area 26.250 ft²
Port Length 6.5 "
P_{bar} 29.21 "Hg
Static 0.6 "H_2O
Static _____ "Hg
P_s _____ "Hg

Upstream Disturbance, Diameters 0.5
Downstream Disturbance, Diameters 2
Pitot ID 18A Pitot Coefficient (C_p) 0.84

CO_2 % 0.0
O_2 % 20.87
N_2 % _____
Meter No. 11

Wet Bulb Temp _____
Dry Bulb Temp _____
B_{ws} 0.028
Fluke # _____

Leak Checks Passed@
Pre 5 Inches H_2O
Post 5 Inches H_2O
Umbilical ID ___

Port-Point #	ΔP	Temp. °F	$\sqrt{\Delta P}$	Null Point Angle, Degrees	Port-Point #	ΔP	Temp. °F	$\sqrt{\Delta P}$	Null Point Angle, Degrees
1-1	1.8	90	1.34		2-1	2.0	91		
1-2	1.5	90			2-2	1.9	91		
1-3	1.2	90			2-3	1.6	92		
1-4	1.1	91			2-4	1.5	92		
1-5	1.4	91			2-5	0.90	92		
1-6	1.5	92			2-6	0.95	93		
1-7	1.5	92			2-7	1.1	92		
1-8	1.5	92			2-8	0.85	92		
Average	1.4375	91.0				1.35	91.875		

.44 x CO_2% + .32 x O_2% + .28 x N_2% = _____ (Md)

(_____ Md × _____1-Bws) + (18 × _____Bws) = _____ (Ms)

$$85.49 \times ____ Cp \times \sqrt{\frac{(_____)Ts\ °R}{____ Ms \times ____ Ps}} \times ____ \sqrt{\Delta P} = ____ \text{ ft/sec (Vs)}$$

_____ Vs × _____ Flue Area × 60 = _____ acfm

$$17.647 \times ____ acfm \times \frac{Ps}{Ts\ °R} = _____ scfm \times 60 = _____ scfh$$

© Mostardi Platt

Volumetric Flow Rate Determination Field Data Sheet

Project Number:	M173006	Date:	8/2/17
Client:	Northern Metals LLC	Test Number:	Post 1 / Pre 2
Test Location:	Common Stack STRU1	Start Time:	0921
Source Condition:	Normal	End Time:	0927
Test Engineer:	AJH	Test Tech:	AJ1

Duct Diameter 5.781 ft
Flue Area 26.250 ft²
Port Length 6.5 "
P_{bar} 29.21 "Hg
Static 0.6 "H_2O
Static _____ "Hg
P_s _____ "Hg

CO_2 % 0
O_2 % 20.92
N_2 % _____
Meter No. 11

Upstream Disturbance, Diameters 0.5
Downstream Disturbance, Diameters 2
Pitot ID 18A Pitot Coefficient (C_p) 0.84
Wet Bulb Temp _____
Dry Bulb Temp _____
B_{ws} _____
Fluke # _____

Leak Checks Passed@
Pre 5 Inches H_2O
Post 5 Inches H_2O
Umbilical ID ___

Port-Point #	ΔP	Temp. °F	$\sqrt{\Delta P}$	Null Point Angle, Degrees	Port-Point #	ΔP	Temp. °F	$\sqrt{\Delta P}$	Null Point Angle, Degrees
1-1	1.8	92			2-1	1.9	93		
1-2	1.4	93			2-2	2.0	93		
1-3	1.2	94			2-3	1.7	94		
1-4	1.05	95			2-4	1.5	94		
1-5	1.3	96			2-5	1.0	94		
1-6	1.4	96			2-6	0.95	95		
1-7	1.5	96			2-7	1.1	96		
1-8	1.0	96			2-8	1.0	96		
Average	1.331	94.750				1.394	94.375		

44 x CO_2% + .32 x O_2% + .28 x N_2% = _____ (Md)

(_____ Md × _____1-Bws) + (18 × _____Bws) = _____ (Ms)

$$85.49 \times ____Cp \times \sqrt{\frac{(_____)Ts\ °R}{____Ms \times ____Ps}} \times ____ \sqrt{\Delta P} = ____ \text{ ft/sec } (Vs)$$

_____ Vs × _____ Flue Area × 60 = _____acfm

$$17.647 \times _____acfm \times \frac{Ps}{Ts\ °R} = _____ \text{ scfm x 60} = _____ \text{ scfh}$$

© Mostardi Platt

Volumetric Flow Rate Determination Field Data Sheet

Project Number:	M173006	Date:	8/2/17
Client:	Northern Metals LLC	Test Number:	Post 2 / Pre 3
Test Location:	Common Stack STRU1	Start Time:	1044
Source Condition:	Normal	End Time:	1050
Test Engineer:	AJH	Test Tech:	AJL

Duct Diameter 5.781 ft
Flue Area 26.250 ft²
Port Length 6.5 "
P_{bar} _____ "Hg
Static 0.6 "H_2O
Static _____ "Hg
P_s _____ "Hg

CO_2 % 0.0
O_2 % 20.9
N_2 % _____
Meter No. 11

Upstream Disturbance, Diameters 0.5
Downstream Disturbance, Diameters 2
Pitot ID 18A Pitot Coefficient (C_p) 0.84
Wet Bulb Temp _____
Dry Bulb Temp _____
B_{ws} _____
Fluke # _____

Leak Checks Passed@
Pre 5 Inches H_2O
Post 5 Inches H_2O
Umbilical ID ___

Port-Point #	ΔP	Temp. °F	$\sqrt{\Delta P}$	Null Point Angle, Degrees	Port-Point #	ΔP	Temp. °F	$\sqrt{\Delta P}$	Null Point Angle, Degrees
1-1	1.6	91			2-1	1.8	98		
1-2	1.5	91			2-2	1.5	98		
1-3	1.2	93			2-3	1.6	99		
1-4	1.1	95			2-4	1.3	99		
1-5	1.3	98			2-5	0.95	99		
1-6	1.6	99			2-6	0.95	99		
1-7	1.5	100			2-7	1.1	99		
1-8	1.0	99			2-8	1.0	98		
Average									

44 x CO_2% + .32 x O_2% + .28 x N_2% = _____ (Md)

(_____ Md × _____1-Bws) + (18 × _____Bws) = _____ (Ms)

$$85.49 \times ____ Cp \times \sqrt{\frac{(_____)Ts\ °R}{____ Ms \times ____ Ps}} \times ____ \sqrt{\Delta P} = ____ \text{ ft/sec } (Vs)$$

_____ Vs × _____ Flue Area × 60 = _____ acfm

$$17.647 \times ____ \text{acfm} \times \frac{Ps}{Ts\ °R} = _____ \text{ scfm x 60} = _____ \text{ scfh}$$

© Mostardi Platt

Volumetric Flow Rate Determination Field Data Sheet

Project Number:	M173006	Date:	8/2/17
Client:	Northern Metals LLC	Test Number:	Post 3
Test Location:	Common Stack STRU1	Start Time:	1210
Source Condition:	Normal	End Time:	1216
Test Engineer:	AJH	Test Tech:	AJI

Duct Diameter 5.781 ft
Flue Area 26.250 ft²
Port Length 6.5 "
P_{bar} _____ "Hg
Static 0.6 "H_2O
Static _____ "Hg
P_s _____ "Hg

CO_2 % 0.0
O_2 % 20.8
N_2 % _____
Meter No. 11

Upstream Disturbance, Diameters 0.5
Downstream Disturbance, Diameters 2
Pitot ID 18A Pitot Coefficient (C_p) 0.84
Wet Bulb Temp _____
Dry Bulb Temp _____
B_{ws} _____
Fluke # _____

Leak Checks Passed@
Pre _____ Inches H_2O
Post _____ Inches H_2O
Umbilical ID ___

Port-Point #	ΔP	Temp. °F	$\sqrt{\Delta P}$	Null Point Angle, Degrees	Port-Point #	ΔP	Temp. °F	$\sqrt{\Delta P}$	Null Point Angle, Degrees
1-1	1.8	98			2-1	2.0	98		
1-2	1.5	98			2-2	2.0	98		
1-3	1.4	99			2-3	1.7	99		
1-4	1.1	99			2-4	1.5	99		
1-5	1.3	100			2-5	1.0	99		
1-6	1.5	100			2-6	1.0	99		
1-7	1.5	100			2-7	1.1	99		
1-8	1.0	100			2-8	0.85	99		
Average									

44 x CO_2% + .32 x O_2% + .28 x N_2% = _____ (Md)

(_____ Md × _____1-Bws) + (18 × _____Bws) = _____ (Ms)

$$85.49 \times ____ Cp \times \sqrt{\frac{(_____)Ts\ °R}{____ Ms \times ____ Ps}} \times ____ \sqrt{\Delta P} = ____ \text{ ft/sec (Vs)}$$

_____ Vs × _____ Flue Area × 60 = _____acfm

$$17.647 \times ____ acfm \times \frac{Ps}{Ts\ °R} = _____ scfm \times 60 = _____ scfh$$

MOISTURE FIELD DATA SHEET

Project Name/Number: M173006 Date: 8/2/17
Test Location: Common Stack Source Condition:
Test Method: M4 Meter ID: cm 35 Pre-Calibration Date: 7/10/17
Meter ΔH: 1.796 Meter Y: .998 Test Engineer: JRK

Test (Run) No. 1 Barometric Pressure (P_{bar}) 29.21 in. Hg
Static Pressure: 0.6 Stack Temperature: 90 (From Method _____ Test Data)

Gas Sample Analysis
_____ %CO_2 _____ %O_2

Clock Time 24 hour	Meter Volume (Vm) ft3 or L (Circle One)	Meter Gage Pressure (ΔH) in. H_2O	Meter Inlet Temp. (t_m) °F	Meter Outlet Temp. (t_m) °F	Impinger Outlet Temp °F	Meter Vacuum "Hg
0 20	8.525	1.8	66	66	fully	1
25	12.278	1.8	66	66	iced	1
30	16.028	1.8	67	67		2
35	19.775	1.8	67	67		2
40	23.525	1.8	67	67		2
45	27.279	1.8	67	67		1
50	31.030	1.8	68	68		2
55	34.776	1.8	67	67		2
00	38.529	1.8	67	67		3
05	42.277	1.8	67	67		2
10	46.018	1.8	67	67		2
15	49.776	1.8	67	67		2
20	53.525	1.8	67	67		2
Total Vol. in ft3 (Vm)=	45.000	Multiply total volume collected in Liters by 0.035315 to convert to ft^3				

Condensate
120 / 115 / 10 ~~120 / 115 / 0~~ mls (V_f)
-120 / 115 / 0 mls (V_i)
= 10 mls gained

Silica Gel or Train
257.3 grams (W_f)
-240.3 grams (W_i)
= 17 grams gained

Average Meter Temperature: 66.92°F
(average of both inlet and outlet if applicable)

0.028

Comments:

Pre-Test Leak Check: 0.0 @ 6 "Hg
Post-Test Leak Check: 0.0 @ 5 "Hg

Test (Run) No. 2 Barometric Pressure (P_{bar}) 29.21 in. Hg
Static Pressure: 0.6 Stack Temperature: 90 (From Method _____ Test Data)

Gas Sample Analysis
_____ %CO_2 _____ %O_2

Clock Time 24 hour	Meter Volume (Vm) ft3 or L (Circle One)	Meter Gage Pressure (ΔH) in. H_2O	Meter Inlet Temp. (t_m) °F	Meter Outlet Temp. (t_m) °F	Impinger Outlet Temp °F	Meter Vacuum "Hg
945	55.000	1.8	70	70	fully	2
50	58.75	1.8	71	71	iced	2
55	62.503	1.8	72	72		2
1000	66.254	1.8	73	73		3
05	70.006	1.8	73	73		2
10	73.752	1.8	75	75		2
15	77.505	1.8	77	77		3
20	81.257	1.8	77	77		3
25	85.000	1.8	78	78		2
30	88.756	1.8	78	78		1
35	92.503	1.8	79	79		2
40	96.254	1.8	79	79		2
45	100.010	1.8	80	80		2
Total Vol. in ft3 (Vm)=	45.010	Multiply total volume collected in Liters by 0.035315 to convert to ft^3				

Condensate
110 / 105 / 3 mls (V_f)
-100 / 100 / 0 mls (V_i)
= 18 mls gained

Silica Gel or Train
253.0 grams (W_f)
-245.7 grams (W_i)
= 7.3 grams gained

Average Meter Temperature: 75.54
(average of both inlet and outlet if applicable)

0.027

Comments:

Pre-Test Leak Check: 0.0 @ 6 "Hg
Post-Test Leak Check: 0.0 @ 4 "Hg

MOISTURE FIELD DATA SHEET

Project Name/Number: M173006 Date: 8/2/17
Test Location: Common Stack Source Condition:
Test Method: M9 Meter ID: CM 35 Pre-Calibration Date: 7/13/17
Meter ΔH: 1.796 Meter Y: .998 Test Engineer: JBK

Test (Run) No. 3 Barometric Pressure (P_{bar}) 29.21 in. Hg
Static Pressure: 0.6 Stack Temperature: 90 (From Method ____ Test Data)

Gas Sample Analysis
____ %CO_2 ____ %O_2

Clock Time 24 hour	Meter Volume (Vm) ft3 or L (Circle One)	Meter Gage Pressure (ΔH) in. H_2O	Meter Inlet Temp. (t_m) °F	Meter Outlet Temp. (t_m) °F	Impinger Outlet Temp °F	Meter Vacuum "Hg
1110	1.000	1.8	83	83	fully iced	2
15	4.753	1.8	83	83		2
20	8.502	1.8	83	83		2
25	12.254	1.8	84	84		2
30	16.011	1.8	85	85		1
35	19.756	1.8	85	85		2
40	23.501	1.8	85	85		2
45	27.258	1.8	84	84		1
50	31.000	1.8	85	85		1
55	34.755	1.8	85	85		2
1200	38.501	1.8	86	86		2
05	42.257	1.8	86	86		2
10	46.007	1.8	87	87		3
Total Vol. in ft3 (Vm)=	45.007	Multiply total volume collected in Liters by 0.035315 to convert to ft^3				

Condensate
130 / 128 / 10 mls (V_f)
- 125 / 115 / 10 mls (V_i)
= 18 mls gained

Silica Gel or Train
264.5 grams (W_f)
- 257.3 grams (W_i)
= 7.2 grams gained

Average Meter Temperature: 84.69°F
(average of both inlet and outlet if applicable)

0.027

Comments:

Pre-Test Leak Check: 0.0 @ 7 "Hg
Post-Test Leak Check: 0.0 @ 4 "Hg

Test (Run) No. ____ Barometric Pressure (P_{bar}) ____ in. Hg
Static Pressure: ____ Stack Temperature: ____ (From Method ____ Test Data)

Gas Sample Analysis
____ %CO_2 ____ %O_2

Clock Time 24 hour	Meter Volume (Vm) ft3 or L (Circle One)	Meter Gage Pressure (ΔH) in. H_2O	Meter Inlet Temp. (t_m) °F	Meter Outlet Temp. (t_m) °F	Impinger Outlet Temp °F	Meter Vacuum "Hg
Total Vol. in ft3 (Vm)=		Multiply total volume collected in Liters by 0.035315 to convert to ft^3				

Condensate
____ / ____ / ____ mls (V_f)
- ____ / ____ / ____ mls (V_i)
= ____ mls gained

Silica Gel or Train
____ grams (W_f)
- ____ grams (W_i)
= ____ grams gained

Average Meter Temperature: ____
(average of both inlet and outlet if applicable)

Comments:

Pre-Test Leak Check: ____ @ ____ "Hg
Post-Test Leak Check: ____ @ ____ "Hg

Appendix H - Calibration Data

© Mostardi Platt

MOSTARDI PLATT

Procedures for Method 5 and Flow Calibration

Nozzles

The nozzles are measured according to Method 5, Section 10.1

Dry Gas Meters

The test meters are calibrated according to Method 5, Section 10.3 and 16.1. and "Procedures for Calibrating and Using Dry Gas Volume Meters as Calibration Standards" by P.R. Westlin and R.T. Shigehara, March 10, 1978.

Analytical Balance

The accuracy of the analytical balance is checked with Class S, Stainless Steel Type 303 weights manufactured by F. Hopken and Son, Jersey City, New Jersey.

Temperature Sensing Devices

The potentiometer and thermocouples are calibrated utilizing a NIST traceable millivolt source.

Pitot Tubes

The pitot tubes utilized during this test program are manufactured according to the specification described and illustrated in the *Code of Federal Regulations*, Title 40, Part 60, Appendix A, Methods 1 and 2. The pitot tubes comply with the alignment specifications in Method 2, Section 10.1; and the pitot tube assemblies are in compliance with specifications in the same section.

© Mostardi Platt

Dry Gas Meter/Control Module Calibration Diagram

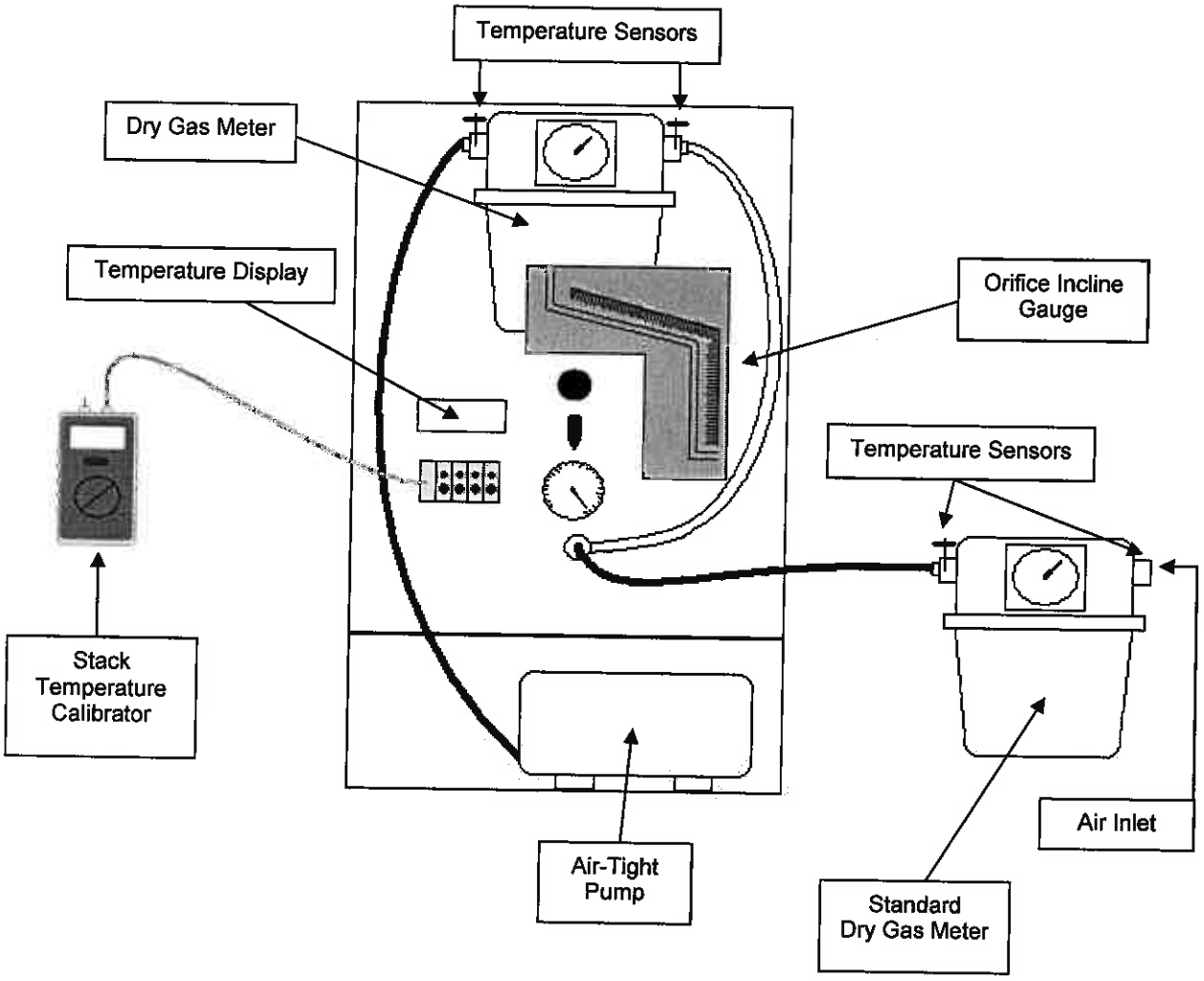

Dry Gas Meter Calibration Data

Dry Gas Meter No.	CM11	Date:	July 5, 2017
Standard Meter No.	366618	Calibrated By:	MDK
Standard Meter (Y)	0.9875	Barometric Pressure:	29.44

Run Number		Orifice Setting in H_2O Chg (H)	Standard Meter Gas Volume vr	Dry Gas Meter Gas Volume vd	Standard Meter Temp. F° tr	Dry Gas Meter Inlet Temp. F° tdi	Dry Gas Meter Outlet Temp. F° tdo	Dry Gas Meter Avg. Temp. F° td	Time Min	Time Sec	Y	Chg (H)
Final			60.077	105.673	80	83	82					
Initial			53.847	99.539	79	82	81					
Difference	1	0.20	6.230	6.134	80	83	82	82	23	45	1.007	1.732
Final			65.463	110.974	80	84	83					
Initial			60.259	105.846	79	82	82					
Difference	2	0.50	5.204	5.128	80	83	83	83	12	30	1.007	1.717
Final			71.143	116.576	80	86	83					
Initial			65.804	111.306	80	84	83					
Difference	3	0.70	5.339	5.270	80	85	83	84	11	0	1.006	1.767
Final			76.683	122.044	80	86	84					
Initial			71.449	116.882	80	86	83					
Difference	4	0.90	5.234	5.162	80	86	84	85	9	30	1.008	1.761
Final			83.708	128.973	81	88	84					
Initial			76.919	122.283	80	86	84					
Difference	5	1.20	6.789	6.690	81	87	84	86	10	45	1.008	1.788
Final			53.627	99.307	79	83	80					
Initial			42.258	88.159	79	79	79					
Difference	6	2.00	11.369	11.148	79	81	80	80	13	50	1.004	1.767
									Average		1.007	1.755

© Mostardi Platt

Stack Temperature Sensor Calibration

Meter Box # : CM11 *Name :* MDK

Ambient Temperature : 79 °F *Date :* July 5, 2017

Calibrator Model # : CL23A

Serial # : T-249465

Date Of Certification : January 10, 2017

Primary Standards Directly Traceable National Institute of Standards and Technology (NIST)

Reference Source Temperature (° F)	Test Thermometer Temperature (° F)	Temperature Difference %
0	1	0.2
250	251	0.1
600	598	0.2
1200	1197	0.2

$$\frac{(\text{Ref. Temp., °F} + 460) - (\text{Test Therm. Temp., °F} + 460)}{\text{Ref. Temp., °F} + 460} * 100 <= 1.5\ \%$$

© Mostardi Platt

Meter Box Calibration

Dry Gas Meter Calibration Data

Dry Gas Meter No.	CM11	Date:	August 4, 2017
Standard Meter No.	15788714	Calibrated By:	MDK
Standard Meter (Y)	0.9972	Barometric Pressure:	29.18

Run Number		Orifice Setting in H_2O Chg (H)	Standard Meter Gas Volume vr	Dry Gas Meter Gas Volume vd	Standard Meter Temp. F° tr	Dry Gas Meter Inlet Temp. F° tdi	Dry Gas Meter Outlet Temp. F° tdo	Dry Gas Meter Avg. Temp. F° td	Time Min	Time Sec	Y	Chg (H)
Final			93.675	18.544	75	80	79					
Initial			88.664	13.458	74	80	79					
Difference	1	0.20	5.011	5.086	75	80	79	80	19	0	0.991	1.672
Final			99.426	24.343	74	80	79					
Initial			93.895	18.765	74	80	79					
Difference	2	0.50	5.531	5.578	74	80	79	80	13	45	0.998	1.793
Final			105.544	30.516	74	81	79					
Initial			99.668	24.585	74	80	79					
Difference	3	0.70	5.876	5.931	74	81	79	80	12	20	0.997	1.789
Final			11.858	37.203	74	80	79					
Initial			5.937	31.254	73	80	79					
Difference	4	0.90	5.921	5.949	74	80	79	80	11	0	1.001	1.799
Final			17.178	42.556	74	81	79					
Initial			12.088	37.433	74	80	79					
Difference	5	1.20	5.090	5.123	74	81	79	80	8	10	0.998	1.792
Final			88.506	113.295	75	79	79					
Initial			74.474	99.262	75	79	78					
Difference	6	2.00	14.032	14.033	75	79	79	79	17	25	0.999	1.797
										Average	**0.997**	**1.774**

© Mostardi Platt

Stack Temperature Sensor Calibration

Meter Box # : CM11 *Name :* MDK

Ambient Temperature : 77 °F *Date :* August 4, 2017

Calibrator Model # : CL23A

Serial # : T-249465

Date Of Certification : January 10, 2017

Primary Standards Directly Traceable National Institute of Standards and Technology (NIST)

Reference Source Temperature (° F)	Test Thermometer Temperature (° F)	Temperature Difference %
0	1	0.2
250	251	0.1
600	598	0.2
1200	1198	0.1

$$\frac{(\text{Ref. Temp., °F} + 460) - (\text{Test Therm. Temp., °F} + 460)}{\text{Ref. Temp., °F} + 460} * 100 <= 1.5\ \%$$

© Mostardi Platt

Meter Box Calibration

Dry Gas Meter Calibration Data

Dry Gas Meter No.	CM35	Date:	July 10, 2017
Standard Meter No.	1865430	Calibrated By:	ce1
Standard Meter (Y)	1.0410	Barometric Pressure:	29.18

Run Number		Orifice Setting in H_2O Chg (H)	Standard Meter Gas Volume vr	Dry Gas Meter Gas Volume vd	Standard Meter Temp. F° tr	Dry Gas Meter Inlet Temp. F° tdi	Dry Gas Meter Outlet Temp. F° tdo	Dry Gas Meter Avg. Temp. F° td	Time Min	Time Sec	Y	Chg (H)
Final			86.479	81.760	81	77	77					
Initial			81.621	76.743	77	77	77					
Difference	1	0.20	4.858	5.017	79	77	77	77	19	42	1.004	1.792
Final			91.626	87.097	83	79	79					
Initial			86.479	81.760	81	77	77					
Difference	2	0.50	5.147	5.337	82	78	78	78	13	10	0.995	1.800
Final			96.459	92.099	83	79	79					
Initial			91.626	87.097	83	79	79					
Difference	3	0.70	4.833	5.002	83	79	79	79	10	26	0.997	1.798
Final			101.595	97.418	84	80	80					
Initial			96.459	92.099	83	79	79					
Difference	4	0.90	5.136	5.319	84	80	80	80	9	46	0.996	1.795
Final			106.440	102.448	85	80	80					
Initial			101.595	97.418	84	80	80					
Difference	5	1.20	4.845	5.030	85	80	80	80	7	58	0.991	1.795
Final			81.094	76.202	77	76	76					
Initial			76.210	71.185	77	76	76					
Difference	6	2.00	4.884	5.017	77	76	76	76	6	17	1.006	1.794
									Average		0.998	1.796

© Mostardi Platt

Stack Temperature Sensor Calibration

Meter Box # : CM35 *Name :* ce1

Ambient Temperature : 78 °F *Date :* July 10, 2017

Calibrator Model # : CL23A

Serial # : T-249465

Date Of Certification : January 10, 2017

Primary Standards Directly Traceable National Institute of Standards and Technology (NIST)

Reference Source Temperature (° F)	Test Thermometer Temperature (° F)	Temperature Difference %
0	0	0.0
250	250	0.0
600	600	0.0
1200	1203	0.2

$$\frac{(\text{Ref. Temp., °F} + 460) - (\text{Test Therm. Temp., °F} + 460)}{\text{Ref. Temp., °F} + 460} * 100 <= 1.5\ \%$$

© Mostardi Platt

Meter Box Calibration

Dry Gas Meter Calibration Data

Dry Gas Meter No.	CM35	Date:	August 4, 2017
Standard Meter No.	366618	Calibrated By:	MDK
Standard Meter (Y)	0.9875	Barometric Pressure:	29.18

Run Number		Orifice Setting in H_2O Chg (H)	Standard Meter Gas Volume vr	Dry Gas Meter Gas Volume vd	Standard Meter Temp. F° tr	Dry Gas Meter Inlet Temp. F° tdi	Dry Gas Meter Outlet Temp. F° tdo	Dry Gas Meter Avg. Temp. F° td	Time Min	Time Sec	Y	Chg (H)
Final			85.373	80.971	75	78	78					
Initial			80.216	75.943	76	78	78					
Difference	1	0.20	5.157	5.028	76	78	78	78	20	0	1.017	1.795
Final			91.627	87.073	75	78	78					
Initial			85.594	81.193	75	78	78					
Difference	2	0.50	6.033	5.880	75	78	78	78	14	45	1.018	1.780
Final			98.239	93.518	75	78	78					
Initial			91.856	87.289	75	78	78					
Difference	3	0.70	6.383	6.229	75	78	78	78	13	15	1.016	1.796
Final			105.954	101.078	74	77	77					
Initial			98.447	93.729	74	78	78					
Difference	4	0.90	7.507	7.349	74	78	78	78	13	40	1.013	1.772
Final			11.759	6.746	74	78	78					
Initial			6.141	1.249	74	78	78					
Difference	5	1.20	5.618	5.497	74	78	78	78	8	55	1.014	1.794
Final			80.092	75.820	76	77	77					
Initial			65.942	62.066	75	77	77					
Difference	6	2.00	14.150	13.754	76	77	77	77	17	20	1.014	1.794
										Average	**1.015**	**1.788**

© Mostardi Platt

Stack Temperature Sensor Calibration

Meter Box # : CM35 *Name :* MDK

Ambient Temperature : 77 °F *Date :* August 4, 2017

Calibrator Model # : CL23A

Serial # : T-249465

Date Of Certification : January 10, 2017

Primary Standards Directly Traceable National Institute of Standards and Technology (NIST)

Reference Source Temperature (° F)	Test Thermometer Temperature (° F)	Temperature Difference %
0	0	0.0
250	250	0.0
600	600	0.0
1200	1203	0.2

$$\frac{(\text{Ref. Temp., °F} + 460) - (\text{Test Therm. Temp., °F} + 460)}{\text{Ref. Temp., °F} + 460} * 100 <= 1.5\ \%$$

© Mostardi Platt

METER CALIBRATION

Meter Information					
Console Model	XC-260	Dry Gas Meter Number	M2 A	Encoder Model	HEDS-9100-F00
Gas Meter Model	SK25	Totalizer Scale Factor (Initial)	1.0000	Totalizer Model	RED LION
		Totalizer Scale Factor (Final)	0.9981	Temp Display Model	JENCO

Calibration Conditions							
WTM ID	15340981	Calibration Technician	CE1			Calibration Date	29-Jun-17
WTM Cal Factor	0.9921	Barometric Pressure	(Pb)	745.40455	mm Hg		

	Calibration Data											Results				
	Run Time		Dry Gas Meter		Wet Test Meter		Standardized Volumes				Totalizer Gamma	Totalizer Gamma	Meter Gamma		Corrected Flowrate
	Elapsed		Gas Temp	Totalizer Display	Gas Volume	Gas Temp	Totalizer Initial SF	Totalizer Final SF	Dry Gas Meter	Wet Test Meter	Initial	Variation	DGM Display	Variation	
	(Θ)		(t_m)		(V_w)	(t_w)	($V_{m(std)}$)	($V_{m(std)}$)	($V_{m(std)}$)	($V_{w(std)}$)	(Y)	(ΔY)	(Y)	(ΔY)	(Q_m)
	min		°C	liters	liters	°C	std liters	std liters	std liters	std liters					slm
Run 1 - Initial	0.00		23.3333	0	234.7	22.77778									
Final	30.00		24.444	61.404	296.49	23.333									
Total/Avg	30.00		23.8887	61.404	61.79	23.05539	59.478	59.367		59.546	1.001	0.003			1.97
Run 2 - Initial	0.00		25	0	297.29	23.33333									
Final	30.00		25.5556	30.119	327.35	23.88888									
Total/Avg	30.00		25.2778	30.119	30.06	23.61111	29.038	28.984		28.914	0.996	-0.002			0.96
Run 3 - Initial	0.00		25.5555	0	327.35	23.8888									
Final	30.00		26.6666	17.705	345.02	23.88888									
Total/Avg	30.00		26.1111	17.705	17.67	23.88884	17.022	16.990		16.980	0.998	-0.001			0.56

0.998

Average Meter Calibration Factor Y **0.998**

Note: For Calibration Factor Y, the ratio of the reading of the calibration meter to the dry gas meter, acceptable tolerance of individual values from the average is +-0.02.

© Mostardi Platt

METER CALIBRATION

Meter Information					
Console Model	XC-260	Dry Gas Meter Number	M2 B	Encoder Model	HEDS-9100-F00
Gas Meter Model	SK25	Totalizer Scale Factor (Initial)	1.0000	Totalizer Model	RED LION
		Totalizer Scale Factor (Final)	1.0003	Temp Display Model	JENCO

Calibration Conditions							
WTM ID	366618	Calibration Technician	CE1			Calibration Date	29-Jun-17
WTM Cal Factor	0.9875	Barometric Pressure	(Pb)	739.56322	mm Hg		

	Calibration Data										Results				
	Run Time		Dry Gas Meter		Wet Test Meter		Standardized Volumes				Totalizer Gamma	Totalizer Gamma	Meter Gamma		Corrected Flowrate
	Elapsed		Gas Temp	Totalizer Display	Gas Volume	Gas Temp	Totalizer Initial SF	Totalizer Final SF	Dry Gas Meter	Wet Test Meter	Initial	Variation	DGM Display	Variation	
	(Θ)		(t_m)		(V_w)	(t_w)	($V_{m(std)}$)	($V_{m(std)}$)	($V_{m(std)}$)	($V_{w(std)}$)	(Y)	(ΔY)	(Y)	(ΔY)	(Q_m)
	min		°C	liters	liters	°C	std liters	std liters	std liters	std liters					slm
Run 1 - Initial	0.00		23.8888	0	0	23.3333									
Final	30.00		25.5555	59.905	60.372	23.333									
Total/Avg	30.00		24.7222	59.905	60.372	23.33315	57.410	57.429		57.402	1.000	0.000			1.89
Run 2 - Initial	0.00		25.5555	0	0	23.8888									
Final	30.00		26.6666	28.42	28.504	23.8888									
Total/Avg	30.00		26.1111	28.42	28.504	23.8888	27.110	27.119		27.051	0.998	-0.002			0.89
Run 3 - Initial	0.00		26.6666	0	0	23.8888									
Final	30.00		27.7777	13.35	13.425	24.4444									
Total/Avg	30.00		27.2222	13.35	13.425	24.1666	12.688	12.692		12.729	1.003	0.003			0.42
										1.000					

Average Meter Calibration Factor Y **1.000**

Note: For Calibration Factor Y, the ratio of the reading of the calibration meter to the dry gas meter, acceptable tolerance of individual values from the average is +-0.02.

© Mostardi Platt

Stack Temperature Sensor Calibration

Meter Box # : *M2*

Name : *CE1*

Ambient Temperature : *74* °F

Date : *June 29, 2017*

Calibrator Model # : *CL23A*

Serial # : *T-249465*

Date Of Certification : *January 8, 2016*

Primary Standards Directly Traceable National Institute of Standards and Technology (NIST)

Reference Source Temperature (° F)	**Test Thermometer Temperature (° F)**	**Temperature Difference %**
0	0	0.0
250	250	0.0
600	600	0.0
1200	1203	0.2

$$\frac{(\text{Ref. Temp., F} + 460) - (\text{Test Therm. Temp., F} + 460)}{\text{Ref. Temp., F} + 460} * 100 <= 1.5\ \%$$

© Mostardi Platt

METER CALIBRATION

Meter Information					
Console Model	XC-260	Dry Gas Meter Number	M2 A	Encoder Model	HEDS-9100-F00
Gas Meter Model	SK25	Totalizer Scale Factor (Initial)	1.0000	Totalizer Model	RED LION
		Totalizer Scale Factor (Final)	1.0001	Temp Display Model	JENCO

Calibration Conditions							
WTM ID	18654530	Calibration Technician	CE1			Calibration Date	4-Aug-17
WTM Cal Factor	1.0410	Barometric Pressure	(Pb)	742.3569	mm Hg		

	Calibration Data											Results				
	Run Time		Dry Gas Meter		Wet Test Meter		Standardized Volumes				Totalizer Gamma	Totalizer Gamma	Meter Gamma		Corrected Flowrate
	Elapsed		Gas Temp	Totalizer Display	Gas Volume	Gas Temp	Totalizer Initial SF	Totalizer Final SF	Dry Gas Meter	Wet Test Meter	Initial	Variation	DGM Display	Variation	
	(Θ)		(t_m)		(V_w)	(t_w)	($V_{m(std)}$)	($V_{m(std)}$)	($V_{m(std)}$)	($V_{w(std)}$)	(Y)	(ΔY)	(Y)	(ΔY)	(Q_m)
	min		°C	liters	liters	°C	std liters	std liters	std liters	std liters					slm
Run 1 - Initial	0.00		22.222	0	0	21.666									
Final	30.00		23.8888	60.55	57.965	22.222									
Total/Avg	30.00		23.0554	60.55	57.965	21.944	58.576	58.579		58.594	1.000	0.000			2.03
Run 2 - Initial	0.00		23.888	0	0	22.777									
Final	30.00		25	31.28	29.931	23.8888									
Total/Avg	30.00		24.444	31.28	29.931	23.3329	30.119	30.120		30.114	1.000	0.000			1.04
Run 3 - Initial	0.00		25	0	0	23.888									
Final	30.00		25	15.83	15.15	23.888									
Total/Avg	30.00		25	15.83	15.15	23.888	15.214	15.215		15.214	1.000	0.000			0.53

1.000

Average Meter Calibration Factor Y **1.000**

Note: For Calibration Factor Y, the ratio of the reading of the calibration meter to the dry gas meter, acceptable tolerance of individual values from the average is +-0.02.

© Mostardi Platt

METER CALIBRATION

Meter Information					
Console Model	XC-260	Dry Gas Meter Number	M2 B	Encoder Model	HEDS-9100-F00
Gas Meter Model	SK25	Totalizer Scale Factor (Initial)	1.0000	Totalizer Model	RED LION
		Totalizer Scale Factor (Final)	0.9996	Temp Display Model	JENCO

Calibration Conditions							
WTM ID	15788714	Calibration Technician	CE1			Calibration Date	4-Aug-17
WTM Cal Factor	0.9972	Barometric Pressure	(Pb)	742.3569	mm Hg		

	Calibration Data											Results				
	Run Time		Dry Gas Meter		Wet Test Meter		Standardized Volumes				Totalizer Gamma	Totalizer Gamma	Meter Gamma		Corrected Flowrate
	Elapsed		Gas Temp	Totalizer Display	Gas Volume	Gas Temp	Totalizer Initial SF	Totalizer Final SF	Dry Gas Meter	Wet Test Meter	Initial	Variation	DGM Display	Variation	
	(Θ)		(t_m)		(V_w)	(t_w)	($V_{m(std)}$)	($V_{m(std)}$)	($V_{m(std)}$)	($V_{w(std)}$)	(Y)	(ΔY)	(Y)	(ΔY)	(Q_m)
	min		°C	liters	liters	°C	std liters	std liters	std liters	std liters					slm
Run 1 - Initial	0.00		22.2222	0	0	22.2222									
Final	30.00		24.444	55.204	55.133	22.222									
Total/Avg	30.00		23.3331	55.204	55.133	22.2221	53.354	53.335		53.336	1.000	0.000			1.77
Run 2 - Initial	0.00		24.444	0	0	22.222									
Final	30.00		25.555	25.6	25.429	22.2222									
Total/Avg	30.00		24.9995	25.6	25.429	22.2221	24.604	24.595		24.600	1.000	0.000			0.82
Run 3 - Initial	0.00		25	0	0	22.222									
Final	30.00		26.111	9.801	9.713	22.222									
Total/Avg	30.00		25.5555	9.801	9.713	22.222	9.402	9.399		9.396	0.999	0.000			0.31

1.000

Average Meter Calibration Factor Y **1.000**

Note: For Calibration Factor Y, the ratio of the reading of the calibration meter to the dry gas meter, acceptable tolerance of individual values from the average is +-0.02.

© Mostardi Platt

Stack Temperature Sensor Calibration

Meter Box # : *M2* *Name :* *CE1*

Ambient Temperature : *74* °F *Date :* *August 4, 2017*

Calibrator Model # : *CL23A*

Serial # : *T-249465*

Date Of Certification : *January 8, 2016*

Primary Standards Directly Traceable National Institute of Standards and Technology (NIST)

Reference Source Temperature (° F)	***Test Thermometer Temperature (° F)***	***Temperature Difference %***
0	*0*	0.0
250	*250*	0.0
600	*600*	0.0
1200	*1203*	0.2

$$\frac{(\text{Ref. Temp., F} + 460) - (\text{Test Therm. Temp., F} + 460)}{\text{Ref. Temp., F} + 460} * 100 <= 1.5\ \%$$

© Mostardi Platt

S TYPE PITOT TUBE INSPECTION WORKSHEET

Pitot Tube No: 164 Date: 6/15/2017 Inspectors Name: SRS

Type of Probe: (circle one) M2 M5 M17 Probe Length: 7 ft.

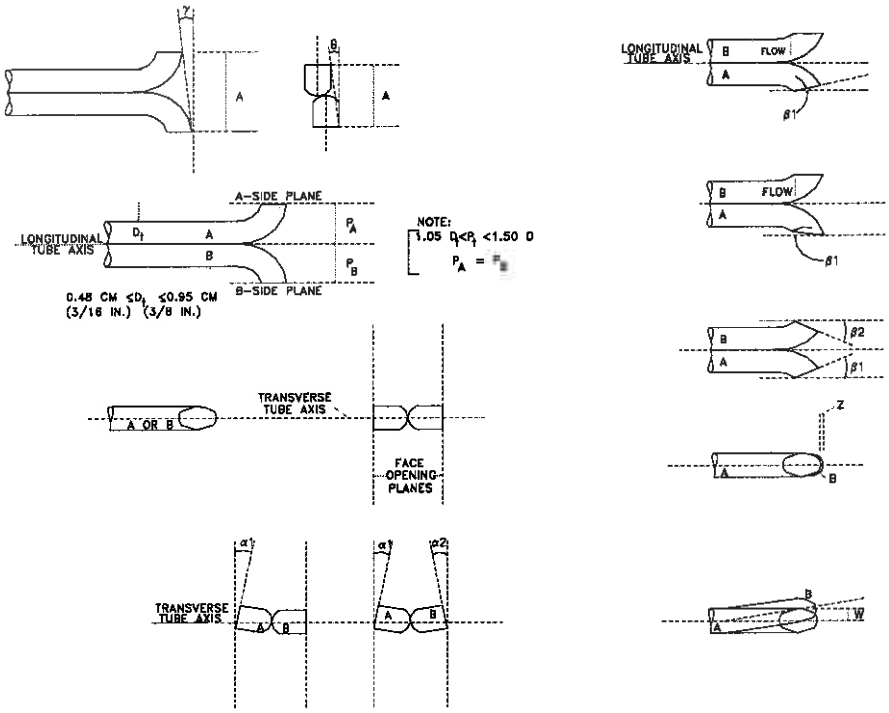

Pitot tube assembly level? x yes ____ no

Pitot tube openings damaged? ____ yes (explain below) x no

a_1 = 0.5 ° (<10°), a_2 = 2 ° (<10°) z = A sin g = 0.009 (in.); (<0.125 in.)

b_1 = 2 ° (<5°), b_2 = 2 ° (<5°) w = A sin q = 0.018 (in.); (<0.03125 in.)

γ = 0.5 °, θ = 1 °, A = 1.006 (in.) P_A = 0.500 (in.), P_B = 0.540 (in.), D_t = 0.375 (in.)

Calibration required? ____ yes x no

© Mostardi Platt

S TYPE PITOT TUBE INSPECTION WORKSHEET

Pitot Tube No: 164 Date: 8/4/2017 Inspectors Name: AJ1

Type of Probe: (circle one) M2 M5 M17 Probe Length: 7 ft.

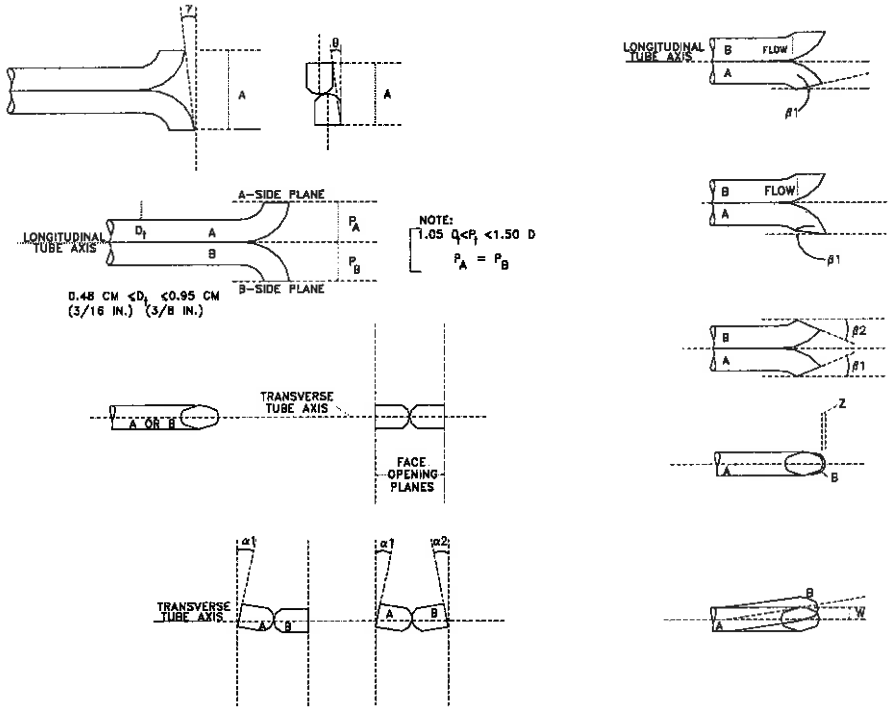

Pitot tube assembly level? x yes ____ no

Pitot tube openings damaged? ____ yes (explain below) x no

a_1 = 0 ° (<10°), a_2 = 3.5 ° (<10°) z = A sin g = 0.000 (in.); (<0.125 in.)

b_1 = 0 ° (<5°), b_2 = 4 ° (<5°) w = A sin q = 0.000 (in.); (<0.03125 in.)

γ = 0 °, θ = 0 °, A = 1.022 (in.) P_A = 0.500 (in.), P_B = 0.540 (in.), D_t = 0.375 (in.)

Calibration required? ____ yes x no

© Mostardi Platt

S TYPE PITOT TUBE INSPECTION WORKSHEET

Pitot Tube No: 48 Date: 6/9/2017 Inspector's Name: JMG1

Type of Probe: (circle one) M2 M5 M17 Probe Length: 7 ft.

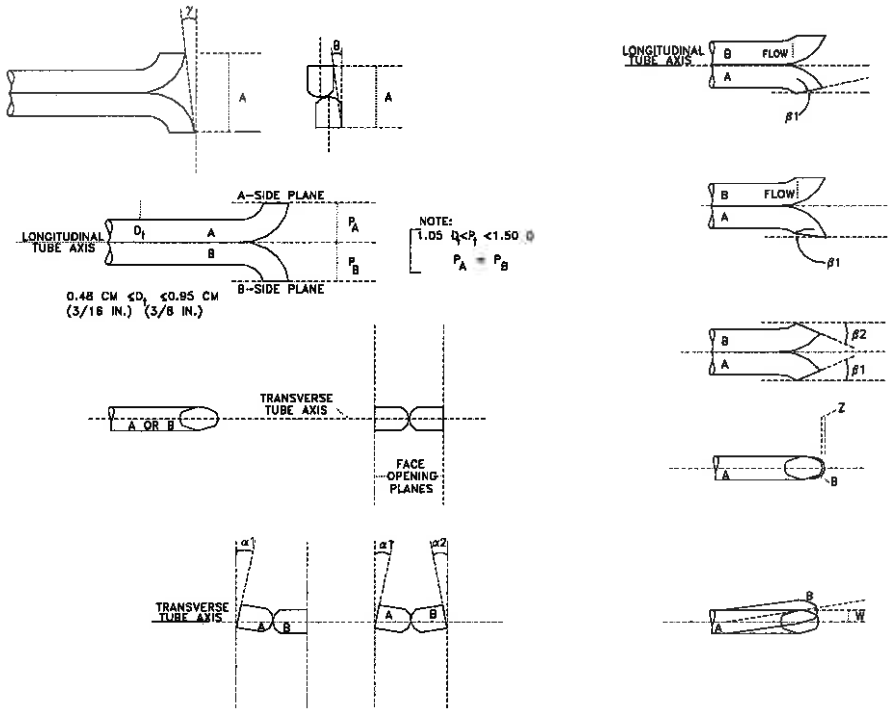

Pitot tube assembly level? x yes ____ no

Pitot tube openings damaged? ____ yes (explain below) x no

a_1 = 0.5 ° (<10°), a_2 = 0 ° (<10°) z = A sin g = 0.033 (in.); (<0.125 in.)

b_1 = 0.5 ° (<5°), b_2 = 0 ° (<5°) w = A sin q = 0.025 (in.); (<0.03125 in.)

γ = 2 °, θ = 1.5 °, A = 0.936 (in.) P_A = 0.468 (in.), P_B = 0.468 (in.), D_t = 0.375 (in.)

Calibration required? ____ yes x no

© Mostardi Platt

S TYPE PITOT TUBE INSPECTION WORKSHEET

Pitot Tube No: 48 Date: 8/4/2017 Inspector's Name: CTM

Type of Probe: (circle one) M2 M5 M17 Probe Length: 7 ft.

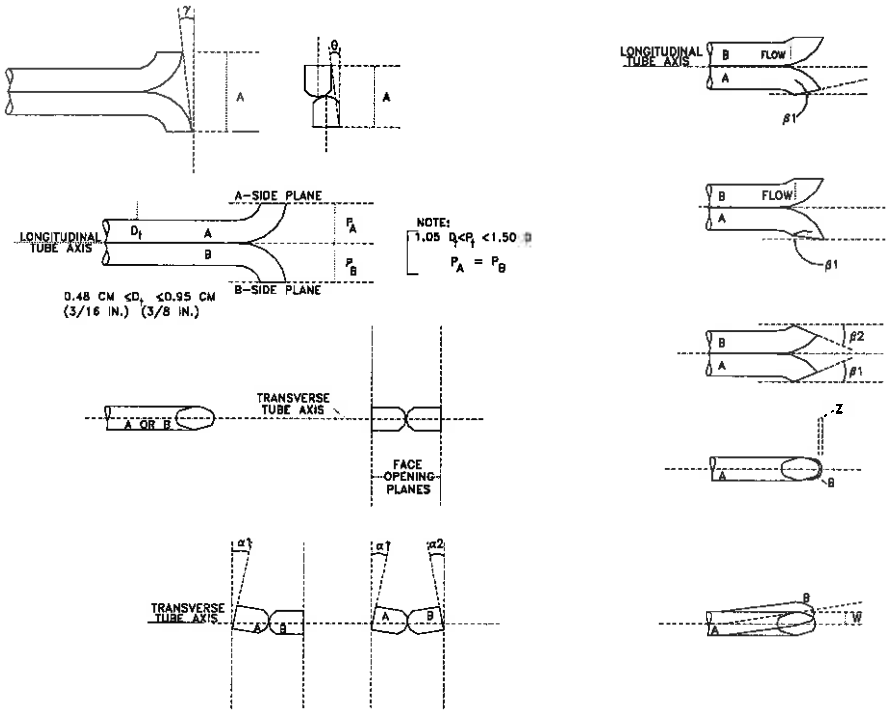

Pitot tube assembly level? x yes ____ no

Pitot tube openings damaged? ____ yes (explain below) x no

a_1 = 2 ° (<10°), a_2 = 2 ° (<10°) z = A sin g = 0.016 (in.); (<0.125 in.)

b_1 = 1 ° (<5°), b_2 = 0 ° (<5°) w = A sin q = 0.033 (in.); (<0.03125 in.)

γ = 1 °, θ = 2 °, A = 0.944 (in.) P_A = 0.472 (in.), P_B = 0.472 (in.), D_t = 0.375 (in.)

Calibration required? ____ yes x no

© Mostardi Platt

S TYPE PITOT TUBE INSPECTION WORKSHEET

Pitot Tube No: 18 Date: 7/17/2017 Inspector's Name: SRS

Type of Probe: (circle one) **M2** M5 M17 Probe Length: 7 ft.

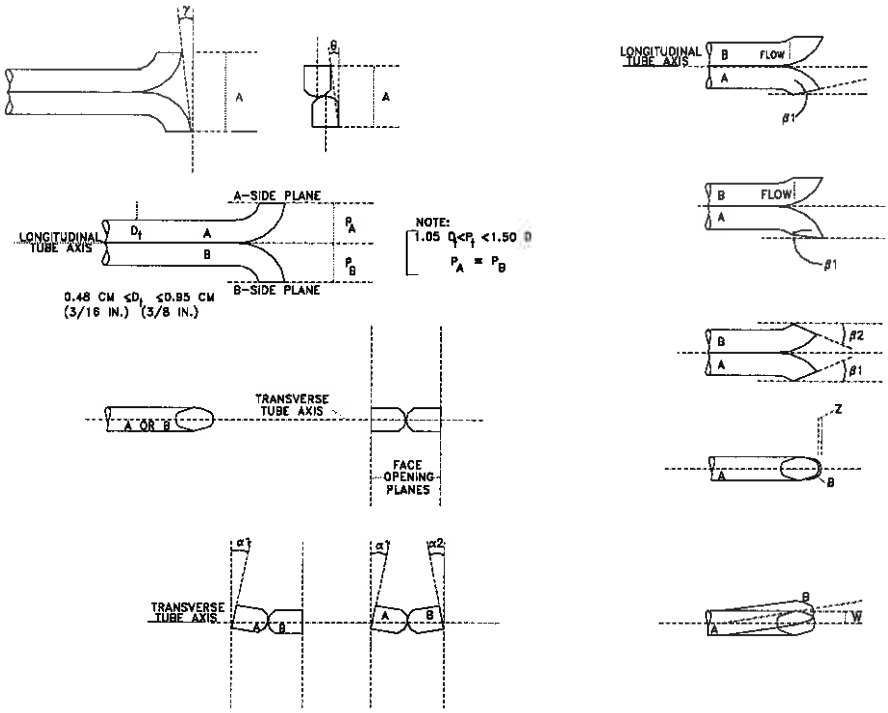

Pitot tube assembly level? x yes ____ no

Pitot tube openings damaged? ____ yes (explain below) x no

a_1 = 1 ° (<10°), a_2 = 1 ° (<10°) z = A sin g = 0.039 (in.); (<0.125 in.)

b_1 = 2 ° (<5°), b_2 = 2.5 ° (<5°) w = A sin q = 0.024 (in.); (<0.03125 in.)

γ = 2.5 °, θ = 1.5 °, A = 0.902 (in.) P_A = 0.451 (in.), P_B = 0.451 (in.), D_t = 0.375 (in.)

Calibration required? ____ yes x no

© Mostardi Platt

S TYPE PITOT TUBE INSPECTION WORKSHEET

Pitot Tube No: 18 Date: 8/4/2017 Inspector's Name: CTM

Type of Probe: (circle one) **M2** M5 M17 Probe Length: 7 ft.

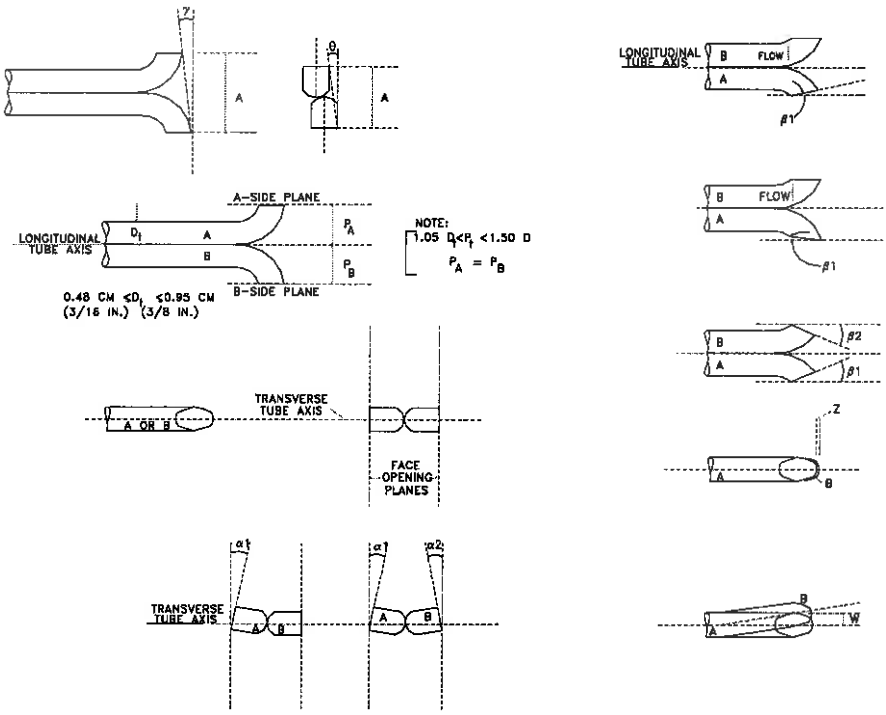

Pitot tube assembly level? x yes ____ no

Pitot tube openings damaged? ____ yes (explain below) x no

a_1 = 1 ° (<10°), a_2 = 1 ° (<10°) z = A sin g = 0.047 (in.); (<0.125 in.)

b_1 = 2 ° (<5°), b_2 = 1 ° (<5°) w = A sin q = 0.063 (in.); (<0.03125 in.)

γ = 3 °, θ = 4 °, A = 0.904 (in.) P_A = 0.452 (in.), P_B = 0.452 (in.), D_t = 0.375 (in.)

Calibration required? ____ yes x no

© Mostardi Platt

Client:	Northern Metals, LLC	**Test Location:**	Common Stack STRU1
Facility:	Pacific Street Yard Facility	**Date:**	8/2/17
Project #:	M173006	**Operator:**	JFR
Operating Condition:	Normal		

			Point Markings (including port length):	
Probe Length:	6.0	ft	**Point #**	**Inches**
Probe Type:	Extractive		1	17.59
Sample Plane:	Horizontal			40.69
Port Length:	6.00	in.		63.79
Port Size (diameter):	6	in.		
Port Type:	Flange			
Duct Shape:	Circular			
Diameter:	5.78125	ft		
Duct Area:	26.25	Sq. Ft.		
Upstream Diameters:				
Downstream Diameters:				
Number of Ports Sampled:				
Number of Points per Port:				
Total Number of Traverse Points:				

Type	Setting	Cylinder ID	Cylinder Value	Predicted Value	Predicted Value Difference, %	Analyzer Response	Difference, % of Cylinder	Expiration Date	Final Bottle Pressure, PSI
CH4 ppmv	Zero		0	N/A	N/A	0.20	-0.22%		
	Low	CC495423	30.02	30.21	-1.97%	30.80	-2.60%	2/22/2025	1900
	Mid	CC65120	60.57	60.75	-1.07%	61.40	-1.37%	3/31/2025	
	High	CC401614	90.43	N/A	N/A	90.60	-0.19%	1/17/2025	600
NMHC ppmv	Zero		0	N/A	N/A	0.70	-0.77%		
	Low	CC495423	30.47	30.96	1.49%	30.50	-0.10%	2/22/2025	1900
	Mid	CC65120	61.08	61.35	0.08%	61.30	-0.36%	3/31/2025	
	High	CC401614	90.84	N/A	N/A	90.90	-0.07%	1/17/2025	600

Response Time Data

Type	RM Analyzer Make/Model	RM Analyzer s/n	Analyzer Span	RM Gas Span
CH4 ppmv	Thermo 55 i	116090215	500	112
NMHC ppmv			500	112
	Start		95% Response	Time (min)
Upscale				1
Downscale				1

© Mostardi Platt

Client: Northern Metals, LLC
Facility: Pacific Street Yard Facility
Fuel Type: Other
Fuel Factor: Enter Fuel Factor Here
Diluent: O2 %

Location: Common Stack STRU1
Date: 8/2/17
Operator: JFR
Project #: M173006
Fuel Factor: by Standard

CH4 ppmv Calibration Data

Run #	Cma	Precal	Postcal	Pre zero	Post zero	Co	Cm	C	Cgas	Span Bias	Span Drift	Zero Bias	Zero Drift
1	60.57	61.40	60.50	0.20	0.20	0.20	60.95	2.80	2.8	0.12	-0.80	-0.18	0.00
2	60.57	60.50	61.90	0.20	0.00	0.10	61.20	3.30	3.3	-2.20	1.25	0.00	-0.18
3	60.57	61.90	60.30	0.00	0.30	0.15	61.10	2.90	2.9	0.45	-1.43	-0.27	0.27

NMHC ppmv Calibration Data

Run #	Cma	Precal	Postcal	Pre zero	Post zero	Co	Cm	C	Cgas	Span Bias	Span Drift	Zero Bias	Zero Drift
1	61.08	61.30	61.10	0.70	0.70	0.70	61.20	44.10	44.1	-0.03	-0.18	-0.63	0.00
2	61.08	61.10	61.30	0.70	1.20	0.95	61.20	71.80	71.8	-0.36	0.18	-1.07	0.45
3	61.08	61.30	61.20	1.20	1.00	1.10	61.25	59.00	59.0	-0.20	-0.09	-0.89	-0.18

Calibration Corrected Data

Run #	Run Date	Start Time	End Time						NMHC ppmv	CH4 ppmv
1	8/2/17	8:20	9:19						44.1	2.8
2	8/2/17	9:45	10:44						71.8	3.3
3	8/2/17	11:10	12:09						59.0	2.9

© Mostardi Platt

Client: Northern Metals, LLC
Facility: Pacific Street Yard Facility
Project #: M173006
Test Location: Common Stack STRU1
Operating Condition: Normal
Date: 8/2/17

Linearity Cal/Pre 1 Cal

Time	CH4 ppmv		NMHC ppmv	
7:55	0.20	z	0.70	z
7:56	47.60		48.80	
7:57	87.10		88.80	
7:58	88.80		89.50	
7:59	89.90		89.60	
8:00	90.30		90.30	
8:01	90.60		90.90	
8:02	90.60	h	90.90	h
8:03	91.20		90.90	
8:04	91.90		91.00	
8:05	74.20		74.40	
8:06	61.60		61.80	
8:07	62.00		61.30	
8:08	61.80		61.30	
8:09	61.40	m	61.30	m
8:10	61.60		61.20	
8:11	62.00		61.10	
8:12	50.90		50.60	
8:13	30.80	l	30.90	
8:14	30.80		30.50	l

© Mostardi Platt

Client: Northern Metals, LLC
Facility: Pacific Street Yard Facility
Project #: M173006

Test Location: Common Stack STRU1
Operating Condition: Normal
Date: 8/2/17

Post 1/Pre 2

Time	CH4 ppmv		NMHC ppmv	
9:27	60.50	m	61.20	
9:28	60.80		61.10	m
9:29	61.00		61.10	
9:30	60.90		60.90	
9:31	14.60		42.60	
9:32	1.40		9.60	
9:33	0.40		1.10	
9:34	0.30		0.90	
9:35	0.20	z	0.70	z

Post 2/Pre 3

Time	CH4 ppmv		NMHC ppmv	
10:56	0.00	z	1.20	z
10:57	0.00		1.30	
10:58	0.30		5.40	
10:59	60.30		60.80	
11:00	61.90	m	61.30	m

Post 3

Time	CH4 ppmv		NMHC ppmv	
12:16	60.30	m	61.70	
12:17	60.70		61.50	
12:18	60.80		61.20	m
12:19	61.70		61.10	
12:20	49.80		55.70	
12:21	19.60		31.80	
12:22	0.50		1.60	
12:23	0.30	z	1.20	
	0.30		1.00	z

© Mostardi Platt

Client:	Northern Metals	**Test Location:**	Common Stack STRU1
Facility:	Pacific Street Yard	**Date:**	7/26/17
Project #:	M173006	**Operator:**	KJC
Operating Condition:	Normal		

Probe Length:	7.0	ft
O2/CO2 Samples taken by :	Multi-point, integrated continuous sample	
Sample Plane:	Horizontal	
Port Length:	6.50	in.
Port Size (diameter):	6.5	in.
Port Type:	Nipple	
Duct Shape:	Circular	
Diameter:	5.78125	ft
Duct Area:		Sq. Ft.
Upstream Diameters:	2.000	
Downstream Diameters:	0.500	
Number of Ports Sampled:	2	
Number of Points per Port:	12	
Total Number of Traverse Points:	24	

Type	Setting	Cylinder ID	Cylinder Value	Analyzer Response	Difference, % of Span	Expiration Date
O2 % (dry)	Zero		0	0.10	-0.53%	n/a
	Mid	XC000730B	9.798	9.80	-0.01%	9/6/2024
	High	LL83683	19.03	19.00	0.16%	12/2/2024
CO2 % (dry)	Zero		0	0.00	0.00%	n/a
	Mid	XC000730B	10.26	10.30	-0.21%	9/6/2024
	High	LL83683	18.84	18.80	0.21%	12/2/2024

Response Time Data

Type	RM Analyzer Make/Model	RM Analyzer s/n	Analyzer Span	RM Gas Span
O2 % (dry)	ECOM #3	OC-IR423	21	19.03
CO2 % (dry)	ECOM #3	OC-IR423	21	18.84

© Mostardi Platt

Client: Northern Metals
Facility: Pacific Street Yard

Location: Common Stack STRU1
Date: 7/26/17
Operator: KJC
Project #: M173006

O2 % (dry) Correction Data

Run #	Cma	Precal	Postcal	Pre zero	Post zero	Co	Cm	C	Cgas	Span Bias	Span Drift	Zero Bias	Zero Drift
Run 1	9.80	9.80	9.80	0.10	0.10	0.10	9.80	20.69	20.8	0.00	0.00	0.00	0.00
Run 2	9.80	9.80	9.90	0.10	0.10	0.10	9.85	20.76	20.8	-0.53	0.53	0.00	0.00
Run 3	9.80	9.90	9.80	0.10	0.00	0.05	9.85	21.00	20.9	0.00	-0.53	0.53	-0.53

CO2 % (dry) Correction Data

Run #	Cma	Precal	Postcal	Pre zero	Post zero	Co	Cm	C	Cgas	Span Bias	Span Drift	Zero Bias	Zero Drift
Run 1	10.26	10.30	10.30	0.00	0.00	0.00	10.30	0.00	0.0	0.00	0.00	0.00	0.00
Run 2	10.26	10.30	10.30	0.00	0.00	0.00	10.30	0.00	0.0	0.00	0.00	0.00	0.00
Run 3	10.26	10.30	10.20	0.00	0.00	0.00	10.25	0.00	0.0	0.53	-0.53	0.00	0.00

Calibration Corrected Data

Run #	Run Date	Start Time	End Time	CO2 % (dry)	O2 % (dry)
Run 1	7/26/17	8:58	11:01	0.0	20.8
Run 2	7/26/17	12:55	16:10	0.0	20.8
Run 3	7/27/17	10:14	13:26	0.0	20.9

© Mostardi Platt

Client: Northern Metals, LLC
Facility: Pacific Street Yard
Project #: M173006
O_2/CO_2 Samples taken by :

Test Location: Common Stack STRU1
Operator: KJC
Test Methods: 3A,Asbestos
Multi-point, integrated continuous sample

Calibration Gases

Type	Setting	Cylinder ID	Cylinder Value	Analyzer Response	Difference, % of Span	Expiration Date	Mid cylinder % of high cylinder
CO_2%	Zero	n/a	0	0.00	0.00%	n/a	
	Mid	XC0007301B	10.26	10.30	-0.21%	9/6/2024	54.46%
	High	LL83683	18.84	18.80	0.21%	12/2/2024	
O_2%	Zero	n/a	0	0.10	-0.53%	n/a	
	Mid	XC0007301B	9.798	9.80	-0.01%	9/6/2024	51.49%
	High	LL83683	19.03	19.00	0.16%	12/2/2024	

Analyzer Data

Type	Model/Serial #
CO_2 %	ECOM #3
O_2 %	ECOM #3

CO_2 % Correction Data

Run #	Source Condition	Start Time	End Time	Date	Cma	Precal	Postcal	Pre zero	Post zero	Co	Cm	C	Cgas	Span Bias	Span Drift	Zero Bias	Zero Drift
1	Normal	7:55	11:33	7/26/2017	10.26	10.30	10.30	0.00	0.00	0.00	10.30	0.00	0.0	0.00	0.00	0.00	0.00
2	Normal	12:50	16:25	7/26/2017	10.26	10.30	10.30	0.00	0.00	0.00	10.30	0.00	0.0	0.00	0.00	0.00	0.00
3	Normal	10:05	13:35	7/27/2017	10.26	10.30	10.20	0.00	0.00	0.00	10.25	0.00	0.0	0.53	-0.53	0.00	0.00

O_2 % Correction Data

Run #	Source Condition	Start Time	End Time	Date	Cma	Precal	Postcal	Pre zero	Post zero	Co	Cm	C	Cgas	Span Bias	Span Drift	Zero Bias	Zero Drift
1	Normal	7:55	11:33	7/26/2017	9.80	9.80	9.80	0.10	0.10	0.10	9.80	20.69	20.8	0.00	0.00	0.00	0.00
2	Normal	12:50	16:25	7/26/2017	9.80	9.80	9.90	0.10	0.10	0.10	9.85	20.76	20.8	-0.53	0.53	0.00	0.00
3	Normal	10:05	13:35	7/27/2017	9.80	9.90	9.80	0.10	0.00	0.05	9.85	21.00	20.9	0.00	-0.53	0.53	-0.53

© Mostardi Platt

Client: Northern Metals, LLC
Facility: Pacific Street Yard
Project #: M173006
O_2/CO_2 Samples taken by :

Test Location: Common Stack STRU1
Operator: JJR
Test Methods: 3A,23
Multi-point, integrated continuous sample

Calibration Gases

Type	Setting	Cylinder ID	Cylinder Value	Analyzer Response	Difference, % of Span	Expiration Date	Mid cylinder % of high cylinder
CO_2%	Zero	n/a	0	0.00	0.00%	n/a	
	Mid	XC000730B	10.26	10.30	-0.21%	9/6/2024	54.46%
	High	LL83683	18.84	18.80	0.21%	12/2/2024	
O_2%	Zero	n/a	0	0.10	-0.53%	n/a	
	Mid	XC0007308	9.798	9.80	-0.01%	9/6/2024	51.49%
	High	LL83683	19.03	19.00	0.16%	12/2/2024	

Analyzer Data

Type	Model/Serial #
CO_2 %	ECOM #3
O_2 %	ECOM #3

CO_2 % Correction Data

Run #	Source Condition	Start Time	End Time	Date	Cma	Precal	Postcal	Pre zero	Post zero	Co	Cm	C	Cgas	Span Bias	Span Drift	Zero Bias	Zero Drift
1	Normal	10:00	15:15	7/26/2017	10.26	10.30	10.30	0.00	0.00	0.00	10.30	0.00	0.0	0.00	0.00	0.00	0.00
2	Normal	7:20	12:27	7/27/2017	10.26	10.30	10.30	0.00	0.00	0.00	10.30	0.00	0.0	0.00	0.00	0.00	0.00
3	Normal	12:55	15:28	7/27/2017	10.26	10.30	10.20	0.00	0.00	0.00	10.25	0.00	0.0	0.53	-0.53	0.00	0.00
4	Normal	9:35	13:44	8/1/2017	10.26	10.20	10.20	0.00	0.00	0.00	10.20	0.00	0.0	0.53	0.00	0.00	0.00

O_2 % Correction Data

Run #	Source Condition	Start Time	End Time	Date	Cma	Precal	Postcal	Pre zero	Post zero	Co	Cm	C	Cgas	Span Bias	Span Drift	Zero Bias	Zero Drift
1	Normal	10:00	15:15	7/26/2017	9.80	9.80	9.80	0.10	0.10	0.10	9.80	20.69	20.8	0.00	0.00	0.00	0.00
2	Normal	7:20	12:27	7/27/2017	9.80	9.80	9.90	0.10	0.10	0.10	9.85	20.76	20.8	-0.53	0.53	0.00	0.00
3	Normal	12:55	15:28	7/27/2017	9.80	9.90	9.80	0.10	0.00	0.05	9.85	21.00	20.9	0.00	-0.53	0.53	-0.53
4	Normal	9:35	13:44	8/1/2017	9.80	9.80	9.80	0.00	0.00	0.00	9.80	20.80	20.8	0.00	0.00	0.00	0.00

© Mostardi Platt

Client:	Northern Metals, LLC	**Test Location:**	Common Stack
Facility:	Pacific Street Yard	**Date:**	8/1/17
Project #:	M173006	**Operator:**	JRK
Operating Condition:	Normal		

Probe Length:	7.0	**ft**
O2/CO2 Samples taken by :	Multi-point, integrated continuous sample	
Sample Plane:	Horizontal	
Port Length:	6.50	**in.**
Port Size (diameter):	6.5	**in.**
Port Type:	Flange	
Duct Shape:	Circular	
Diameter:	5.78125	**ft**
Duct Area:	26.25	**Sq. Ft.**
Upstream Diameters:	0.500	
Downstream Diameters:	2.000	
Number of Ports Sampled:	2	
Number of Points per Port:	12	
Trinit	24	

Type	Setting	Cylinder ID	Cylinder Value	Analyzer Response	Difference, % of Span	Expiration Date
O2 % (dry)	Zero		0	0.00	0.00%	n/a
	Mid	XC000730B	9.798	9.90	-0.54%	9/6/2024
	High	LL83683	19.03	19.20	-0.89%	12/2/2024
CO2 % (dry)	Zero		0	0.00	0.00%	n/a
	Mid	XC000730B	10.26	10.30	-0.21%	9/6/2024
	High	LL83683	18.84	18.80	0.21%	12/2/2024

Response Time Data

Type	RM Analyzer Make/Model	RM Analyzer s/n	Analyzer Span	RM Gas Span
O2 % (dry)	ECOM #3	OC-IR423	21	19.03
CO2 % (dry)	ECOM #3	OC-IR423	21	18.84

© Mostardi Platt

Client: Northern Metals, LLC
Facility: Pacific Street Yard

Location: Common Stack
Date: 8/1/17
Operator: JRK
Project #: M173006

O2 % (dry) Correction Data

Run #	Cma	Precal	Postcal	Pre zero	Post zero	Co	Cm	C	Cgas	Span Bias	Span Drift	Zero Bias	Zero Drift
Run 1	9.80	9.90	9.80	0.00	0.00	0.00	9.85	20.82	20.7	0.53	-0.53	0.00	0.00
Run 2	9.80	9.80	9.80	0.00	0.00	0.00	9.80	20.82	20.8	0.53	0.00	0.00	0.00
Run 3	9.80	9.80	9.80	0.00	0.00	0.00	9.80	20.88	20.9	0.53	0.00	0.00	0.00

CO2 % (dry) Correction Data

Run #	Cma	Precal	Postcal	Pre zero	Post zero	Co	Cm	C	Cgas	Span Bias	Span Drift	Zero Bias	Zero Drift
Run 1	10.26	10.30	10.30	0.00	0.00	0.00	10.30	0.00	0.0	0.00	0.00	0.00	0.00
Run 2	10.26	10.30	10.40	0.00	0.00	0.00	10.35	0.00	0.0	-0.53	0.53	0.00	0.00
Run 3	10.26	10.40	10.30	0.00	0.00	0.00	10.35	0.00	0.0	0.00	-0.53	0.00	0.00

Calibration Corrected Data

Run #	Run Date	Start Time	End Time	CO2 % (dry)	O2 % (dry)
Run 1	8/1/17	8:20	10:14	0.0	20.7
Run 2	8/1/17	12:45	14:37	0.0	20.8
Run 3	8/1/17	15:11	17:05	0.0	20.9

© Mostardi Platt

Appendix I – Visible Emissions Data and Reader Certification

 © Mostardi Platt

MOSTARDI PLATT

M173006
(Run 1)

Visible Emissions Observation Record Form

Sheet: 1 of 1

Date: 7·26·17

Facility Location:
Northern Metals, LLC
Pacific Street Yard Facility
2800 Pacific St, North
Minneapolis, MN 55411

Observer: A. L. Sorce
Observation Start: 1050
End: 1150

Observation Point:
Along Mississippi River, SSE of source outlet and parallel to dbl. doors at south east corner of bldg.

Distance from Source: 75 ft.
Source Height: @ 70 ft.
Emission Color: As noted
Background: sky

Sky Condition: mostly cloudy

Sun Position: In compliance
Temperature: 73 °F
Wind Direction: W at 4-6 mph
Reading Conditions: good

Operating Conditions:
Normal unit operation

Plume Description:
No visible plume
Attached or Detached

Signature:

Certification Date:
Aug. 31, 2017
(Expiration)

><	0	15	30	45	Notes	><	0	15	30	45	Notes
0	0	0	0	0		30	0	0	0	0	
1	0	0	0	0		31	0	0	0	0	
2	0	0	0	0		32	0	0	0	0	
3	0	0	0	0		33	0	0	0	0	
4	0	0	0	0		34	0	0	0	0	
5	0	0	0	0		35	0	0	0	0	
6	0	0	0	0		36	0	0	0	0	
7	0	0	0	0		37	0	0	0	0	
8	0	0	0	0		38	0	0	0	0	
9	0	0	0	0		39	0	0	0	0	
10	0	0	0	0		40	0	0	0	0	
11	0	0	0	0		41	0	0	0	0	
12	0	0	0	0		42	0	0	0	0	
13	0	0	0	0		43	0	0	0	0	
14	0	0	0	0		44	0	0	0	0	
15	0	0	0	0		45	0	0	0	0	
16	0	0	0	0		46	0	0	0	0	
17	0	0	0	0		47	0	0	0	0	
18	0	0	0	0		48	0	0	0	0	
19	0	0	0	0		49	0	0	0	0	
20	0	0	0	0		50	0	0	0	0	
21	0	0	0	0		51	0	0	0	0	
22	0	0	0	0		52	0	0	0	0	
23	0	0	0	0		53	0	0	0	0	
24	0	0	0	0		54	0	0	0	0	
25	0	0	0	0		55	0	0	0	0	
26	0	0	0	0		56	0	0	0	0	
27	0	0	0	0		57	0	0	0	0	
28	0	0	0	0		58	0	0	0	0	
29	0	0	0	0		59	0	0	0	0	

Comments / Process Information:
Shredder stack common outlet.

Notes:

Notes:

© Mostardi Platt

MOSTARDI PLATT

Visible Emissions Record Form

USEPA Method 9

M173006 – Run #1

Date 7/26/17

Site Northern Metals, LLC
2800 Pacific St., N
Minneapolis, MN 55411

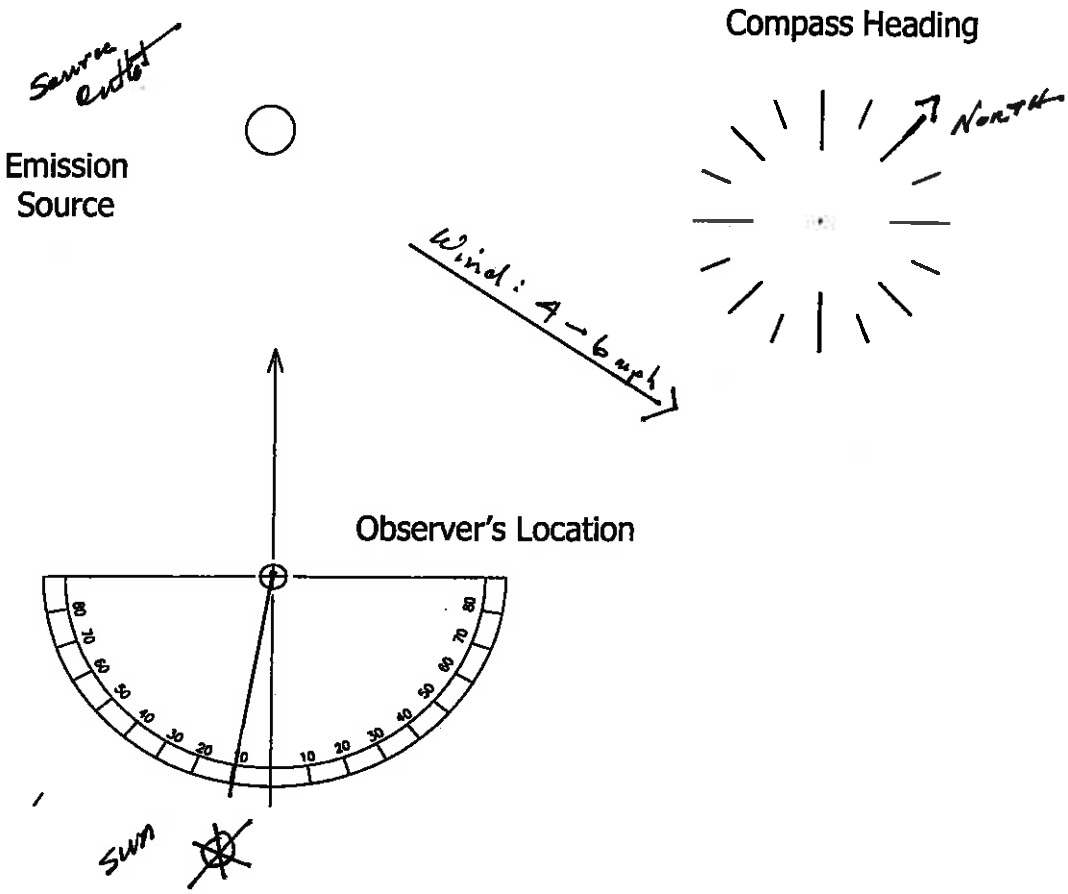

Observer: A. L. Sorce

Comments:
① In compliance
②+③ As noted
④ No visible plume
⑤ Normal operation

Note:
1. Sun Position
2. Wind Direction
3. Wind Speed
4. Plume Type
5. Operating Level

E P A Reference Method 9

© Mostardi Platt

MOSTARDI PLATT

M173006
(Run 2)

Visible Emissions Observation Record Form

Sheet: 1 of 1

Date: 7-26-17

Facility Location:
Northern Metals, LLC
Pacific St. Yard Facility
2800 Pacific St North
Minneapolis, MN 55411

Observer: A. L. Soece
Observation Start: 1155
End: 1315

Observation Point:
Along Mississippi River, SSE of source outlet and parallel to dbl. doors at southeast corner of bldg.

Distance from Source: 75 ft.
Source Height: 70 ft.
Emission Color: As noted
Background: sky

Sky Condition: Mostly cloudy

Sun Position: In compliance
Temperature: 76 °F
Wind Direction: W at 5-7 mph
Reading Conditions: Good

Operating Conditions:
Normal operation

Plume Description: Non-steam ~~No visible~~ plume
(Attached) or Detached

Signature:

Certification Date: Aug. 31, 2017

><	0	15	30	45	Notes	><	0	15	30	45	Notes
0	0	0	0	0		30	0	0	0	0	
1	0	0	0	0		31	0	0	0	0	
2	0	0	0	0		32	0	0	0	0	
3	0	0	0	0		33	5	5	10	10	(3)
4	0	0	0	0		34	5	0	0	0	
5	0	0	0	0		35	0	0	0	0	
6	0	0	0	0		36	0	0	0	0	
7	0	0	0	0		37	0	0	0	0	
8	0	0	0	0		38	0	0	0	0	
9	0	0	0	0		39	0	0	0	0	
10	0	0	0	0	(1)	40	0	0	0	0	
11	0	0	0	0	(2)	41	0	0	0	0	
12	0	0	0	0		42	0	0	0	0	
13	0	0	0	0		43	0	0	0	0	
14	0	0	0	0		44	0	0	0	0	
15	0	0	0	0		45	0	0	0	0	
16	0	0	0	0		46	0	0	0	0	
17	0	0	0	0		47	0	0	0	0	
18	0	0	0	0		48	0	0	0	0	
19	0	0	0	0		49	0	0	0	0	
20	0	0	0	0		50	0	0	0	0	
21	0	0	0	0		51	0	0	0	0	
22	0	0	0	0		52	0	0	0	0	
23	0	0	0	0		53	0	0	0	0	
24	0	0	0	0		54	0	0	0	0	
25	0	0	0	0	(1240)	55	0	0	0	0	
26	0	5	5	0	(3)	56	0	0	0	0	
27	0	0	0	0		57	0	0	0	0	
28	0	0	5	5	(3)	58	0	0	0	0	
29	10	10	5	5		59	0	0	0	0	

Comments / Process Information:
Common stack for shredder.

Notes:
(1) Pause observation at 1206
(2) Resume at 1226
(3) Light grey emission noted as puffs from stack.

Notes:

© Mostardi Platt

MOSTARDI PLATT

Visible Emissions Record Form

USEPA Method 9

M173006 - Run 2

Date 7 / 26 / 17

Site Northern Metals, LLC
2800 Pacific St, N
Minneapolis, MN 55411

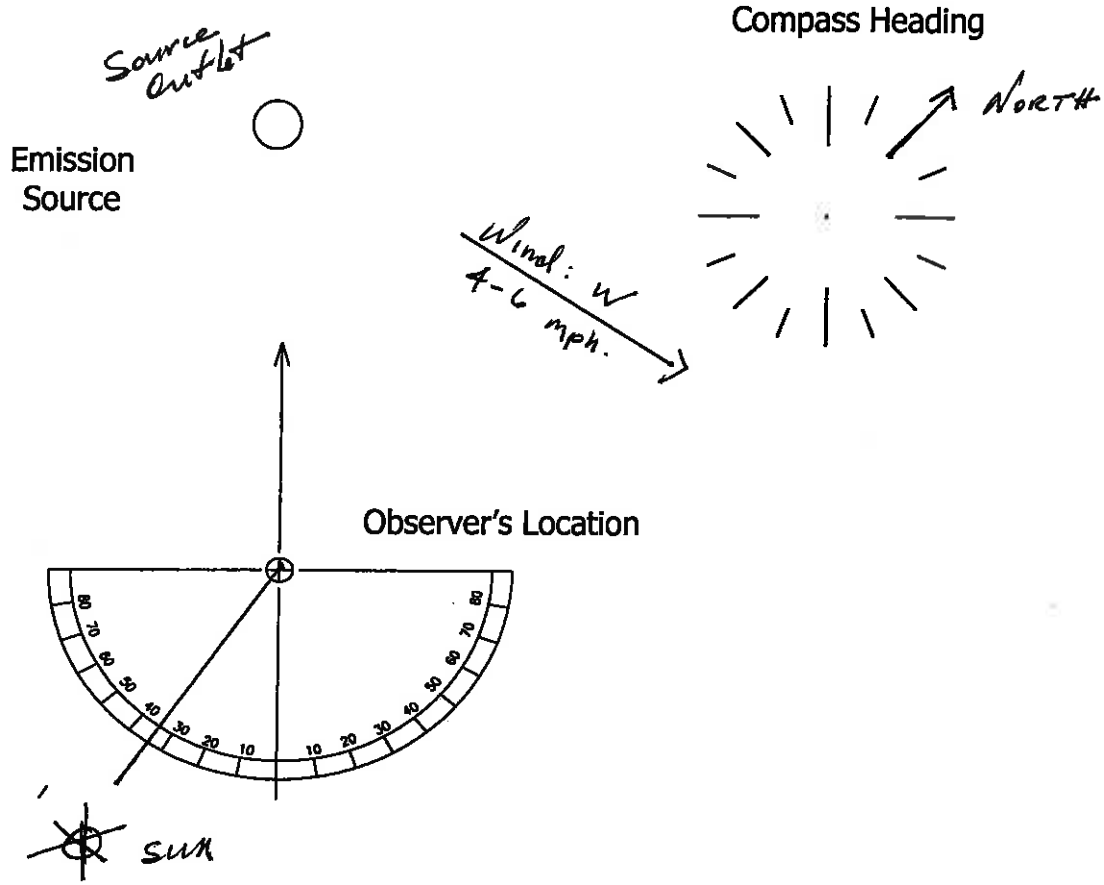

Observer: A. L. Sorce

Comments:
① In compliance
② + ③ As noted
④ No visible plume
⑤ Normal operation

Note:
1. Sun Position
2. Wind Direction
3. Wind Speed
4. Plume Type
5. Operating Level

E P A Reference Method 9

© Mostardi Platt

MOSTARDI PLATT

M173006
(Run 3)

Visible Emissions Observation Record Form

Sheet: 1 of 1

Date: 7-26-17

Facility Location:
NORTHEAD METALS, LLC
Pacific St. Yard Facility
2800 Pacific Street North
Minneapolis, MN 55411

Observer: A.L. SORCE
Observation Start: 1335
End: 1556

Observation Point:
Along Mississippi River, SSE of source outlet and parallel to dbl. doors at southeast corner of bldg.

Distance from Source: 150 ft.
Source Height: 70 ft.
Emission Color: As noted
Background: sky

Sky Condition: Mostly cloudy to partly cloudy
Sun Position: In compliance
Temperature: 78 °F
Wind Direction: W at 4-8 mph
Reading Conditions: GOOD

Operating Conditions:
NORMAL OPERATION

Plume Description:
Non-steam plume
Attached or Detached

Signature:

Certification Date:
Aug. 31, 2017
(expiration)

><	0	15	30	45	Notes	><	0	15	30	45	Notes
0	0	0	0	0		30	0	0	0	0	(3)
1	0	0	0	0		31	5	5	5	5	(4)
2	0	0	5	10	(1)	32	0	0	0	0	
3	10	5	5	5		33	0	0	0	0	(6)
4	10	10	5	5		34	0	0	0	0	(6) (7)
5	5	0	0	0		35	0	0	0	0	
6	0	0	0	0		36	0	0	0	0	
7	0	0	0	0		37	0	0	0	0	
8	0	0	0	0		38	0	0	0	0	
9	0	0	0	5	(1)	39	0	0	0	0	
10	5	5	0	0		40	0	0	0	0	
11	0	0	5	0	(1)	41	0	0	0	0	
12	0	0	0	0		42	0	0	0	0	
13	0	0	0	0		43	0	0	0	0	
14	0	0	0	0		44	0	0	0	0	(1450)
15	0	0	0	0		45	0	0	0	0	
16	0	0	0	0		46	0	0	0	0	
17	0	0	0	0		47	0	0	0	0	
18	0	0	0	0		48	0	0	0	0	
19	0	0	0	0		49	0	0	0	0	
20	0	5	5	0	(1)	50	0	0	0	0	
21	0	10	5	5	(1)	51	0	0	0	0	
22	5	10	15	10		52	0	0	0	0	
23	10	5	5	5		53	0	0	5	5	(4)
24	10	10	15	10		54	0	0	0	0	(1512)
25	10	5	5	5		55	0	0	0	0	
26	0	0	0	0		56	0	0	0	0	
27	0	0	0	0		57	0	0	0	0	
28	0	0	0	0		58	0	0	0	0	
29	0	0	0	0	(2)	59	0	0	0	0	(8)

Comments / Process Information:
Shredder unit combined stack.

(7) Observation site number 2:
Behind whse at 2928 N. 2nd St. approx 800 ft. from source with clear view of stack outlet above roof line

Notes:
(1) Light gray emission noted
(2) Pause observation at 1405

Notes:
(3) Resume observation at 1411
(4) Light gray emission noted.
(5) Pause observation at 1415
(6) Resume at 1440
(8) End at 1556

© Mostardi Platt

MOSTARDI PLATT

Visible Emissions Record Form

Date 7/26/17
Site Northern Metals, LLC
2800 Pacific St, N
Minneapolis, MN 55411

USEPA Method 9
M173006
(Run 3-b)

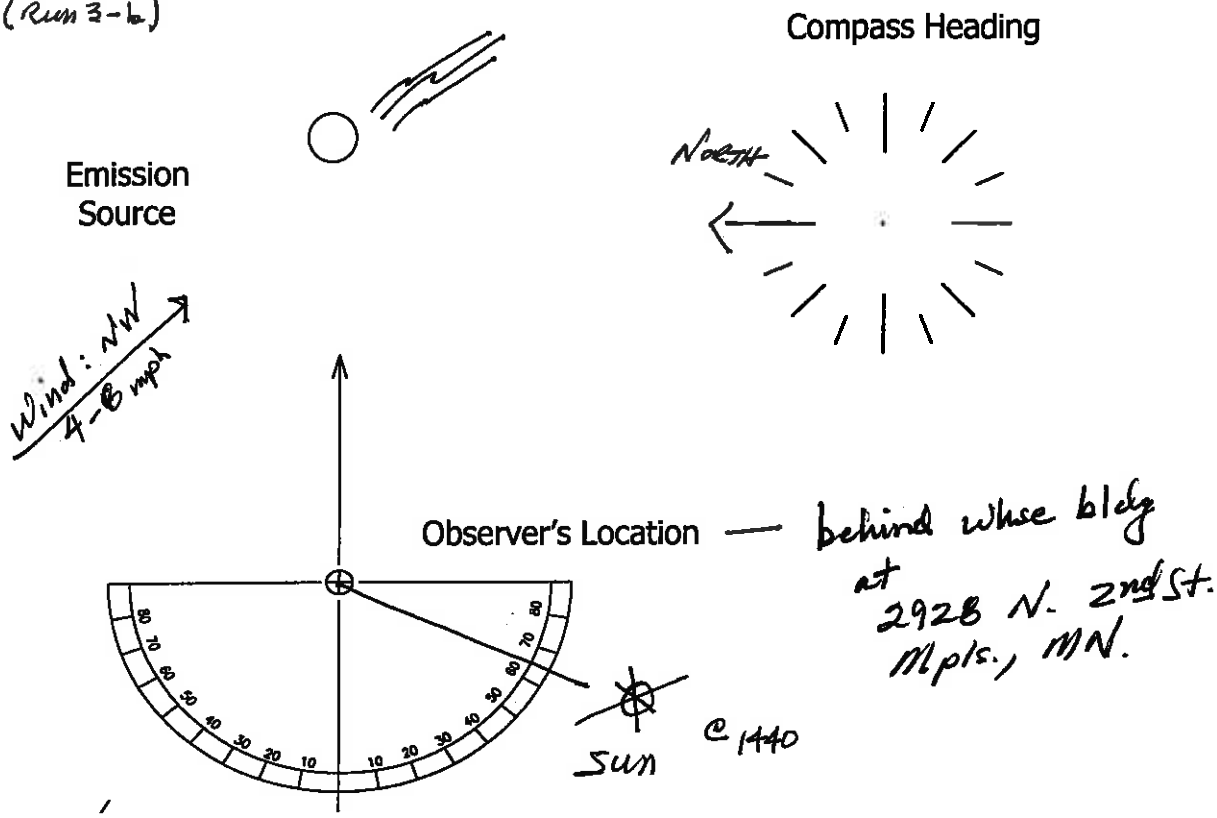

Observer: A. L. Sorce

Comments: ① In compliance
②+③ As noted
④ Attached, non-steam plume.
⑤ Normal operation

Note:
1. Sun Position
2. Wind Direction
3. Wind Speed
4. Plume Type
5. Operating Level

E P A Reference Method 9

© Mostardi Platt

MOSTARDI PLATT

Visible Emissions Record Form

USEPA Method 9

M173006
(Run 3)

Date 7 / 26 / 17
Site Northern Metal, LLC
2800 Pacific St., N
Minneapolis, MN 55411

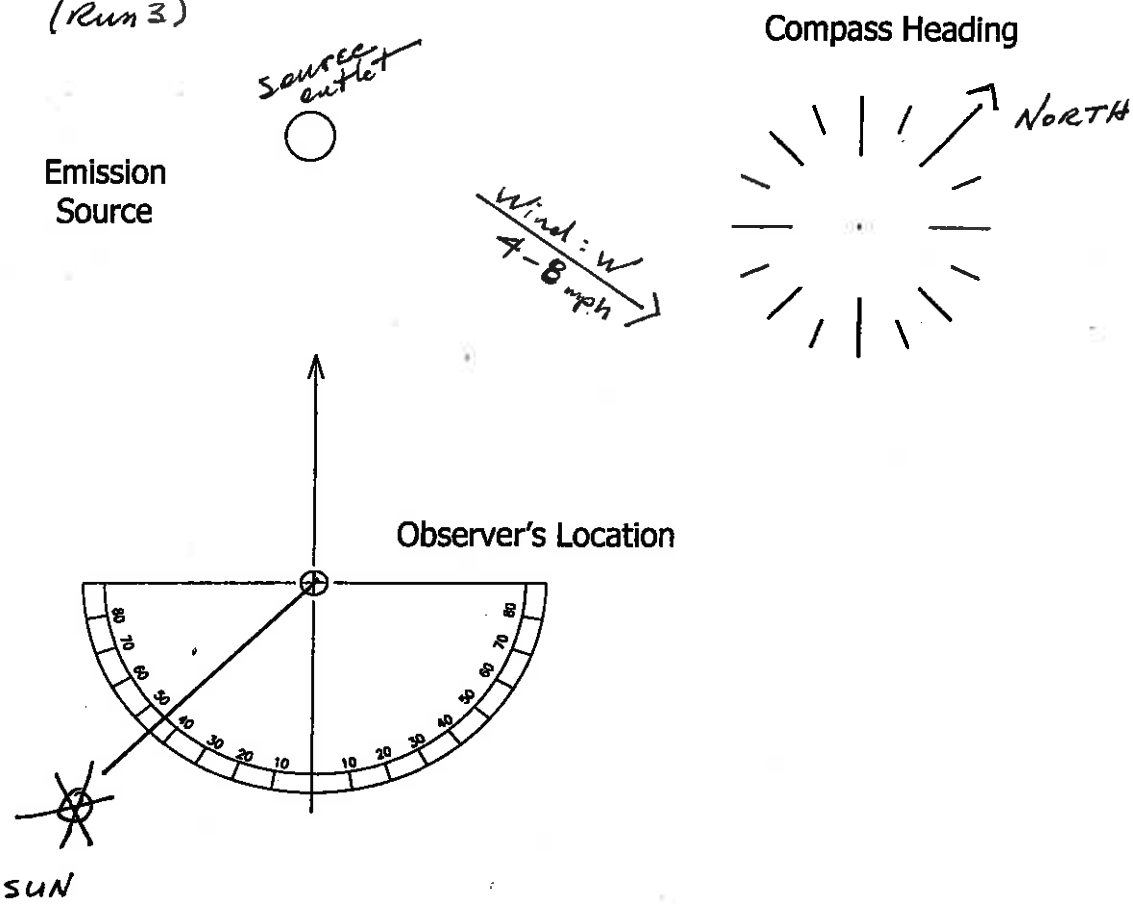

Observer: A. L. Sorce

Comments:
① In compliance
②+③ As noted
④
⑤ Normal operation

Note:
1. Sun Position
2. Wind Direction
3. Wind Speed
4. Plume Type
5. Operating Level

E P A Reference Method 9

© Mostardi Platt

Project Number:	M173006
Facility:	Northern Metals, LLC
Location:	Common Stack STRU1
Date:	7/26/2017
Run #:	1
Time:	10:50-11:50

X	0	15	30	45	minute average	Six minute average		X	0	15	30	45	minute average	Six minute average
0	0	0	0	0	0			30	0	0	0	0	0	0.0
1	0	0	0	0	0			31	0	0	0	0	0	0.0
2	0	0	0	0	0			32	0	0	0	0	0	0.0
3	0	0	0	0	0			33	0	0	0	0	0	0.0
4	0	0	0	0	0			34	0	0	0	0	0	0.0
5	0	0	0	0	0	0.0		35	0	0	0	0	0	0.0
6	0	0	0	0	0	0.0		36	0	0	0	0	0	0.0
7	0	0	0	0	0	0.0		37	0	0	0	0	0	0.0
8	0	0	0	0	0	0.0		38	0	0	0	0	0	0.0
9	0	0	0	0	0	0.0		39	0	0	0	0	0	0.0
10	0	0	0	0	0	0.0		40	0	0	0	0	0	0.0
11	0	0	0	0	0	0.0		41	0	0	0	0	0	0.0
12	0	0	0	0	0	0.0		42	0	0	0	0	0	0.0
13	0	0	0	0	0	0.0		43	0	0	0	0	0	0.0
14	0	0	0	0	0	0.0		44	0	0	0	0	0	0.0
15	0	0	0	0	0	0.0		45	0	0	0	0	0	0.0
16	0	0	0	0	0	0.0		46	0	0	0	0	0	0.0
17	0	0	0	0	0	0.0		47	0	0	0	0	0	0.0
18	0	0	0	0	0	0.0		48	0	0	0	0	0	0.0
19	0	0	0	0	0	0.0		49	0	0	0	0	0	0.0
20	0	0	0	0	0	0.0		50	0	0	0	0	0	0.0
21	0	0	0	0	0	0.0		51	0	0	0	0	0	0.0
22	0	0	0	0	0	0.0		52	0	0	0	0	0	0.0
23	0	0	0	0	0	0.0		53	0	0	0	0	0	0.0
24	0	0	0	0	0	0.0		54	0	0	0	0	0	0.0
25	0	0	0	0	0	0.0		55	0	0	0	0	0	0.0
26	0	0	0	0	0	0.0		56	0	0	0	0	0	0.0
27	0	0	0	0	0	0.0		57	0	0	0	0	0	0.0
28	0	0	0	0	0	0.0		58	0	0	0	0	0	0.0
29	0	0	0	0	0	0.0		59	0	0	0	0	0	0.0

Number of Readings:	240
Total of Readings:	0
Average Reading:	0.00
Highest 6-minute average	0.0

Project Number:	M173006
Facility:	Northern Metals, LLC
Location:	Common Stack STRU1
Date:	7/26/2017
Run #:	2
Time:	11:55-13:15

X	0	15	30	45	minute average	Six minute average		X	0	15	30	45	minute average	Six minute average
0	0	0	0	0	0			30	0	0	0	0	0	2.5
1	0	0	0	0	0			31	0	0	0	0	0	2.5
2	0	0	0	0	0			32	0	0	0	0	0	2.1
3	0	0	0	0	0			33	5	5	10	10	7.5	3.3
4	0	0	0	0	0			34	0	0	0	0	0	2.9
5	0	0	0	0	0	0.0		35	0	0	0	0	0	1.3
6	0	0	0	0	0	0.0		36	0	0	0	0	0	1.3
7	0	0	0	0	0	0.0		37	0	0	0	0	0	1.3
8	0	0	0	0	0	0.0		38	0	0	0	0	0	1.3
9	0	0	0	0	0	0.0		39	0	0	0	0	0	0.0
10	0	0	0	0	0	0.0		40	0	0	0	0	0	0.0
11	0	0	0	0	0	0.0		41	0	0	0	0	0	0.0
12	0	0	0	0	0	0.0		42	0	0	0	0	0	0.0
13	0	0	0	0	0	0.0		43	0	0	0	0	0	0.0
14	0	0	0	0	0	0.0		44	0	0	0	0	0	0.0
15	0	0	0	0	0	0.0		45	0	0	0	0	0	0.0
16	0	0	0	0	0	0.0		46	0	0	0	0	0	0.0
17	0	0	0	0	0	0.0		47	0	0	0	0	0	0.0
18	0	0	0	0	0	0.0		48	0	0	0	0	0	0.0
19	0	0	0	0	0	0.0		49	0	0	0	0	0	0.0
20	0	0	0	0	0	0.0		50	0	0	0	0	0	0.0
21	0	0	0	0	0	0.0		51	0	0	0	0	0	0.0
22	0	0	0	0	0	0.0		52	0	0	0	0	0	0.0
23	0	0	0	0	0	0.0		53	0	0	0	0	0	0.0
24	0	0	0	0	0	0.0		54	0	0	0	0	0	0.0
25	0	0	0	0	0	0.0		55	0	0	0	0	0	0.0
26	0	5	5	0	2.5	0.4		56	0	0	0	0	0	0.0
27	0	0	0	0	0	0.4		57	0	0	0	0	0	0.0
28	0	0	5	5	2.5	0.8		58	0	0	0	0	0	0.0
29	15	15	5	5	10	2.5		59	0	0	0	0	0	0.0

Number of Readings:	240
Total of Readings:	90
Average Reading:	0.38
Highest 6-minute average	3.3

Project Number:	M173006
Facility:	Northern Metals, LLC
Location:	Common Stack STRU1
Date:	7/26/2017
Run #:	3
Time:	13:35-15:56

X	0	15	30	45	minute average	Six minute average		X	0	15	30	45	minute average	Six minute average
0	0	0	0	0	0			30	0	0	0	0	0	1.0
1	0	0	0	0	0			31	5	5	5	5	5	0.8
2	0	0	5	10	3.75			32	0	0	0	0	0	0.8
3	10	5	5	5	6.25			33	0	0	0	0	0	0.8
4	10	10	5	5	7.5			34	0	0	0	0	0	0.8
5	5	0	0	0	1.25	3.1		35	0	0	0	0	0	0.8
6	0	0	0	0	0	3.1		36	0	0	0	0	0	0.8
7	0	0	0	0	0	3.1		37	0	0	0	0	0	0.0
8	0	0	0	0	0	2.5		38	0	0	0	0	0	0.0
9	0	0	0	5	1.25	1.7		39	0	0	0	0	0	0.0
10	5	5	0	0	2.5	0.8		40	0	0	0	0	0	0.0
11	0	0	0	0	0	0.6		41	0	0	0	0	0	0.0
12	0	0	0	0	0	0.6		42	0	0	0	0	0	0.0
13	0	0	0	0	0	0.6		43	0	0	0	0	0	0.0
14	0	0	0	0	0	0.6		44	0	0	0	0	0	0.0
15	0	0	0	0	0	0.4		45	0	0	0	0	0	0.0
16	0	0	0	0	0	0.0		46	0	0	0	0	0	0.0
17	0	0	0	0	0	0.0		47	0	0	0	0	0	0.0
18	0	0	0	0	0	0.0		48	0	0	0	0	0	0.0
19	0	0	0	0	0	0.0		49	0	0	0	0	0	0.0
20	0	5	5	0	2.5	0.4		50	0	0	0	0	0	0.0
21	0	10	5	5	5	1.3		51	0	0	0	0	0	0.0
22	5	10	15	10	10	2.9		52	0	0	0	0	0	0.0
23	10	5	5	5	6.25	4.0		53	0	0	5	5	2.5	0.4
24	10	10	15	10	11.25	5.8		54	0	0	0	0	0	0.4
25	10	5	5	5	6.25	6.9		55	0	0	0	0	0	0.4
26	0	0	0	0	0	6.5		56	0	0	0	0	0	0.4
27	0	0	0	0	0	5.6		57	0	0	0	0	0	0.4
28	0	0	0	0	0	4.0		58	0	0	0	0	0	0.4
29	0	0	0	0	0	2.9		59	0	0	0	0	0	0.0

Number of Readings:	240
Total of Readings:	285
Average Reading:	1.19
Highest 6-minute average	6.9
3 Run Average:	0.52

VISIBLE EMISSIONS EVALUATOR

A Lawrence Sorce

This is to certify that the above named observer has met the specifications of Federal Reference Method 9 and is qualified as a visible emissions evaluator. Maximum deviation on white and black smoke did not exceed 7.5% opacity and no single error exceeding 15% opacity was incurred during the certification test conducted by Eastern Technical Associates, Inc. of Raleigh, N.C. This certificate is valid for six months from date of issue.

445498 Certificate #	**SOR247112** Student ID Number
3/1/2017 Date of Certification	**Valparaiso, IN** Location
8/31/2017 Certification Expiration Date	**NonETA** Last Lecture

Marty Hughes

Director of Training

© Mostardi Platt

Appendix J – Mercury QA/QC Data

© Mostardi Platt

Method 30B Spike Recovery Summary
Pacific Street Yard Facility
Common Stack STRU1

Test Run	Date	Start Time	End Time	Actual Concentration, ng	Expected Spike Concentration, ng	Sample Volume, standard liters	Recovery %
1A	8/1/2017	9:47	10:47	28.3	N/A	30.197	108.14
1B				80.9	50	28.626	
2A	8/1/2017	11:14	12:14	60.8	N/A	32.264	97.19
2B				108.3	50	31.683	
3A	8/1/2017	12:50	13:50	1348.6	N/A	30.348	-518.66
3B				1100.0	50	30.590	
4A	8/1/2017	15:10	16:10	26.6	N/A	30.505	98.93
4B				76.2	50	30.662	

Runs 1 through 4 Spike Recovery Average, % -53.60
Runs 1,2, and 4 Spike Recovery Average, % **101.42**

© Mostardi Platt

RICCA CHEMICAL COMPANY®

Arlington, TX 76012
Pocomoke City, MD 21851
Batesville, IN 47006
http://www.riccachemical.com
1-888-GO-RICCA
customerservice@riccachemical.com

Certificate of Analysis

Mercury ICP Standard, 1000 ppm Hg in 3% HNO_3

Manufacture Date: JUN 09, 2016

Lot Number: 4606991 **Product Number:** PHG1KN **Expiration Date:** NOV 2017

The certified value for this product is confirmed in independent testing by a second qualified chemist. The uncertainty associated with the certified value is ± 0.5% relative, which is the sum of the estimated errors due to the purity of the raw material, the volumetric preparation of the solution, and transpiration of the solution through the container wall.
The final solution concentration is confirmed by AA, ICP, or ICP-MS, and is traceable to NIST Standard Reference Material 3133. All trace level elements were determined by ICP or ICP-MS.

Name	CAS#	Grade
Water	7732-18-5	ACS/ASTM/USP/EP
Nitric Acid	7697-37-2	
Mercury	7439-97-6	ACS

Test	Specification	Result	NIST SRM#
Appearance	Colorless liquid	Passed	
Assay (vs. Potassium Thiocyanate/Volhard's Indicator)	995-1005 ppm Hg	1000 ppm Hg	999

I=Spectral Interference N=Not Tested

Trace Elements by ICP or ICP - MS

All values reported in mg/L (ppm)

Aluminum (Al)	0.0595 ppm	Lanthanum (La)	0.0002 ppm	Strontium (Sr)	< 0.00006 ppm
Antimony (Sb)	N	Lead (Pb)	< 0.00003 ppm	Sulfur (S)	N
Arsenic (As)	N	Lithium (Li)	< 0.03 ppm	Tantalum (Ta)	0.0239 ppm
Barium (Ba)	0.0242 ppm	Lutetium (Lu)	< 0.0003 ppm	Tellurium (Te)	N
Beryllium (Be)	< 0.0001 ppm	Magnesium (Mg)	0.0336 ppm	Terbium (Tb)	< 0.00003 ppm
Bismuth (Bi)	0.0004 ppm	Manganese (Mn)	0.0057 ppm	Thallium (Tl)	< 0.00002 ppm
Boron (B)	< 0.00005 ppm	Molybdenum (Mo)	N	Thorium (Th)	N
Cadmium (Cd)	< 0.00007 ppm	Neodymium (Nd)	< 0.0002 ppm	Thulium (Tm)	< 0.00002 ppm
Calcium (Ca)	N	Nickel (Ni)	0.2402 ppm	Tin (Sn)	< 0.0002 ppm
Cerium (Ce)	0.0025 ppm	Niobium (Nb)	< 0.00008 ppm	Titanium (Ti)	0.0013 ppm
Cesium (Cs)	0.0025 ppm	Osmium (Os)	< 0.003 ppm	Tungsten (W)	< 0.0001 ppm
Chromium (Cr)	< 0.00006 ppm	Palladium (Pd)	0.0970 ppm	Uranium (U)	< 0.00007 ppm
Cobalt (Co)	< 0.00002 ppm	Phosphorus (P)	0.6451 ppm	Vanadium (V)	< 0.00004 ppm
Copper (Cu)	0.0483 ppm	Platinum (Pt)	0.0004 ppm	Ytterbium (Yb)	< 0.001 ppm
Dysprosium (Dy)	< 0.0001 ppm	Potassium (K)	0.2869 ppm	Yttrium (Y)	< 0.00009 ppm
Erbium (Er)	< 0.00007 ppm	Praseodymium (Pr)	< 0.00003 ppm	Zinc (Zn)	0.0021 ppm
Europium (Eu)	< 0.00008 ppm	Rhenium (Re)	0.0154 ppm	Zirconium (Zr)	< 0.002 ppm
Gadolinium (Gd)	< 0.0002 ppm	Rhodium (Rh)	< 0.00003 ppm		
Gallium (Ga)	< 0.0006 ppm	Rubidium (Rb)	< 0.00004 ppm		
Germanium (Ge)	< 0.0003 ppm	Ruthenium (Ru)	< 0.00007 ppm		
Gold (Au)	I	Samarium (Sm)	< 0.002 ppm		
Hafnium (Hf)	< 0.001 ppm	Scandium (Sc)	< 0.00008 ppm		
Holmium (Ho)	< 0.0001 ppm	Selenium (Se)	< 0.004 ppm		
Indium (In)	< 0.00003 ppm	Silicon (Si)	N		
Iridium (Ir)	< 0.00007 ppm	Silver (Ag)	0.0211 ppm		
Iron (Fe)	0.0324 ppm	Sodium (Na)	< 0.02 ppm		

© Mostardi Platt

Specification	Reference
Mercury ICP Standard, 1 mL = 1 mg Hg (1,000 ppm Hg) Hg in 3% HNO3	EPA (200.7)

This standard is guaranteed to be stable and accurate provided the product is kept tightly capped and stored under normal laboratory conditions. Balances are calibrated using NIST traceable weights whose verification of maintenance and recalibration is documented per inhouse Standard Operating Procedures. Class A glassware is also calibrated and routinely rechecked per inhouse Standard Operating Procedures. Trace metal analyzed acids and Trace Metals Analyzed Water are used in the manufacture of this product. Triple cleaned containers are used in the manufacture o this product.

Part Number	Size / Package Type	Shelf Life (Unopened Container)
PHG1KN-100	100 mL natural LDPE	18 months
PHG1KN-500	500 mL natural poly	18 months

Recommended Storage: 15°C - 30°C (59°F - 86°F)

Katie Schnur

Katie Schnur
Quality Control Manager

This Certificate of Analysis is designed to comply with ISO Guide 31 "Reference Materials -- Contents of Certificates and Labels."

© Mostardi Platt

HIGH-PURITY STANDARDS
www.highpuritystandards.com

P.O. Box 41727
Charleston, SC 29423
Phone: (843) 767-7900
Fax: (843) 767-7906

Certificate of Analysis

Certified Reference Material

ISO Guide 34:2009 (RMP) Accreditation Certificate Number AR-1436

ISO/IEC 17025:2005 Accreditation Certificate Number AT-1529

Product Description:

Mercury

Product Number:	**100033-1**
Lot Number:	**1612622**
Matrix:	2% (v/v) HNO_3

Certified Value:

Element	(µg/mL)	SRM ID	SRM Lot#
Mercury	1000 ± 6	3133	061204

The Certified value is based on gravimetric and volumetric preparation, and verified against NIST SRM 3100 series when available via inductively coupled plasma optical emission spectrometry (ICP-OES) and/or inductively coupled plasma mass spectrometry (ICP-MS) using an internal laboratory-developed method. The uncertainty in the certified value is calculated for a 95% confidence interval and coverage factor *k* is about 2.

* Refer to Traceability Information, Section d

Uncertified Values:

Density: 1.010 g/mL ± 0.002 g/mL @ 23.2°C

Trace Metal Impurity Scan: The data reported are based upon a scan of this specific lot via ICP-OES/ICP-MS analysis. The values are reported in µg/L.

Ag	<	1	Cu	<	0.1	Li	<	0.02	Rb	<	0.02	Th	<	0.02
Al	<	0.5	Dy	<	0.02	Lu	<	0.02	Re	<	0.02	Ti	<	0.02
As	<	0.05	Er	<	0.02	Mg	<	0.5	Rh	<	0.02	Tl	<	0.02
Au	<	0.02	Eu	<	0.02	Mn	<	0.1	Ru	<	0.02	Tm	<	0.02
B	<	1	Fe	<	1	Mo	<	0.02	Sb	<	0.02	U	<	0.1
Ba	<	0.02	Ga	<	0.02	Na	<	3	Sc	<	0.02	V	<	0.05
Be	<	0.02	Gd	<	0.02	Nb	<	0.02	Se	<	0.1	W	<	0.02
Bi	<	0.02	Ge	<	0.02	Nd	<	0.02	Si	<	5	Y	<	0.02
Ca	<	1	Hf	<	0.02	Ni	<	0.02	Sm	<	0.02	Yb	<	0.02
Cd	<	0.02	Ho	<	0.02	Os	<	0.02	Sn	<	1	Zn	<	1
Ce	<	0.02	In	<	0.02	Pb	<	0.05	Sr	<	0.02	Zr	<	0.02
Co	<	0.05	Ir	<	0.02	Pd	<	0.02	Ta	<	0.02	Hg		M
Cr	<	0.1	K	<	1	Pr	<	0.02	Tb	<	0.02			
Cs		na	La	<	0.02	Pt	<	0.02	Te	<	0.02			

na - not analyzed

Packaging and Storage Conditions:

The standard is packaged in a pre-cleaned polyethylene bottle. To maintain the integrity of this product, the solution should be kept tightly capped and stored under normal laboratory conditions.

Expiration Information:

The expiry date is guaranteed to be valid for eighteen months from the shipping date provided. For this reason, standards from the same lot may have different expiration dates.

Preparation Date:	**May 5, 2016**
Shipped Date:	**7/8/2016**
Expiration Date:	**January 8, 2018**
Certificate Issue Date:	**June 21, 2016**

Moven Mututuvari

Moven Mututuvari, Ph. D, Laboratory Manager

Lot No.: **1612622**
Rev. No.: 1.0.0
Page 1 of 2

© Mostardi Platt

Appendix K – Calibration Gas Cylinder Certifications

© Mostardi Platt

Airgas
an Air Liquide company

Airgas Specialty Gases
Airgas USA, LLC
12722 S. Wentworth Ave.
Chicago, IL 60628
Airgas.com

CERTIFICATE OF ANALYSIS

Grade of Product: EPA Protocol

Part Number:	E03AI99E15A40Q9	Reference Number:	54-124603578-4
Cylinder Number:	CC495423	Cylinder Volume:	146.2 CF
Laboratory:	124 - Chicago - IL	Cylinder Pressure:	2015 PSIG
PGVP Number:	B12017	Valve Outlet:	590
Gas Code:	CH4,PPN,BALA	Certification Date:	Feb 22, 2017

Expiration Date: Feb 22, 2025

Certification performed in accordance with "EPA Traceability Protocol for Assay and Certification of Gaseous Calibration Standards (May 2012)" document EPA 600/R-12/531, using the assay procedures listed. Analytical Methodology does not require correction for analytical interference. This cylinder has a total analytical uncertainty as stated below with a confidence level of 95%. There are no significant impurities which affect the use of this calibration mixture. All concentrations are on a volume/volume basis unless otherwise noted.

Do Not Use This Cylinder below 100 psig, i.e. 0.7 megapascals.

ANALYTICAL RESULTS

Component	Requested Concentration	Actual Concentration	Protocol Method	Total Relative Uncertainty	Assay Dates
METHANE	30.00 PPM	30.02 PPM	G1	+/- 1% NIST Traceable	02/22/2017
PROPANE	30.00 PPM	30.47 PPM	G1	+/- 1% NIST Traceable	02/22/2017
AIR	Balance				

CALIBRATION STANDARDS

Type	Lot ID	Cylinder No	Concentration	Uncertainty	Expiration Date
NTRM	10061208	CC322987	53.48 PPM METHANE/AIR	+/- 0.8%	Jul 15, 2022
NTRM	16061111	EB0081648	50.06 PPM PROPANE/AIR	+/- 0.4%	Jul 26, 2022

ANALYTICAL EQUIPMENT

Instrument/Make/Model	Analytical Principle	Last Multipoint Calibration
MKS Multigas 17707558	FTIR	Feb 14, 2017
MKS Multigas 17707558	FTIR	Feb 14, 2017

Triad Data Available Upon Request

Approved for Release

© Mostardi Platt

Airgas
an Air Liquide company

Airgas Specialty Gases
Airgas USA, LLC
12722 S. Wentworth Ave.
Chicago, IL 60628
Airgas.com

CERTIFICATE OF ANALYSIS

Grade of Product: EPA Protocol

Part Number:	E03AI99E15A40R0	Reference Number:	54-124609325-6
Cylinder Number:	CC65120	Cylinder Volume:	146.2 CF
Laboratory:	124 - Chicago - IL	Cylinder Pressure:	2015 PSIG
PGVP Number:	B12017	Valve Outlet:	590
Gas Code:	CH4,PPN,BALA	Certification Date:	Mar 31, 2017

Expiration Date: Mar 31, 2025

Certification performed in accordance with "EPA Traceability Protocol for Assay and Certification of Gaseous Calibration Standards (May 2012)" document EPA 600/R-12/531, using the assay procedures listed. Analytical Methodology does not require correction for analytical interference. This cylinder has a total analytical uncertainty as stated below with a confidence level of 95%. There are no significant impurities which affect the use of this calibration mixture. All concentrations are on a volume/volume basis unless otherwise noted.

Do Not Use This Cylinder below 100 psig, i.e. 0.7 megapascals.

ANALYTICAL RESULTS

Component	Requested Concentration	Actual Concentration	Protocol Method	Total Relative Uncertainty	Assay Dates
METHANE	60.00 PPM	60.57 PPM	G1	+/- 1% NIST Traceable	03/31/2017
PROPANE	60.00 PPM	61.08 PPM	G1	+/- 1% NIST Traceable	03/31/2017
AIR	Balance				

CALIBRATION STANDARDS

Type	Lot ID	Cylinder No	Concentration	Uncertainty	Expiration Date
NTRM	10061208	CC322987	53.48 PPM METHANE/AIR	+/- 0.8%	Jul 15, 2022
NTRM	16061111	EB0081648	50.06 PPM PROPANE/AIR	+/- 0.4%	Jul 26, 2022

ANALYTICAL EQUIPMENT

Instrument/Make/Model	Analytical Principle	Last Multipoint Calibration
MKS Multigas 17707558	FTIR	Mar 22, 2017
MKS Multigas 17707558	FTIR	Mar 22, 2017

Triad Data Available Upon Request

Approved for Release

© Mostardi Platt

Airgas
an Air Liquide company

Airgas Specialty Gases
Airgas USA, LLC
12722 S. Wentworth Ave
Chicago, IL 60628
Airgas.com

CERTIFICATE OF ANALYSIS

Grade of Product: EPA Protocol

Part Number:	E03AI99E15A2023	Reference Number:	54-124594670-10
Cylinder Number:	CC401614	Cylinder Volume:	146.2 CF
Laboratory:	124 - Chicago - IL	Cylinder Pressure:	2015 PSIG
PGVP Number:	B12017	Valve Outlet:	590
Gas Code:	CH4,PPN,BALA	Certification Date:	Jan 17, 2017

Expiration Date: Jan 17, 2025

Certification performed in accordance with "EPA Traceability Protocol for Assay and Certification of Gaseous Calibration Standards (May 2012)" document EPA 600/R-12/531, using the assay procedures listed. Analytical Methodology does not require correction for analytical interference. This cylinder has a total analytical uncertainty as stated below with a confidence level of 95%. There are no significant impurities which affect the use of this calibration mixture. All concentrations are on a volume/volume basis unless otherwise noted.

Do Not Use This Cylinder below 100 psig, i.e. 0.7 megapascals.

ANALYTICAL RESULTS

Component	Requested Concentration	Actual Concentration	Protocol Method	Total Relative Uncertainty	Assay Dates
METHANE	90.00 PPM	90.43 PPM	G1	+/- 1% NIST Traceable	01/17/2017
PROPANE	90.00 PPM	90.84 PPM	G1	+/- 1% NIST Traceable	01/17/2017
AIR	Balance				

CALIBRATION STANDARDS

Type	Lot ID	Cylinder No	Concentration	Uncertainty	Expiration Date
NTRM	12060902	CC355944	98.05 PPM METHANE/AIR	+/- 0.6%	Dec 07, 2017
NTRM	09061702	CC301602	97.82 PPM PROPANE/NITROGEN	+/- 0.5%	Jun 05, 2019

ANALYTICAL EQUIPMENT

Instrument/Make/Model	Analytical Principle	Last Multipoint Calibration
MKS Multigas 17707558	FTIR	Dec 22, 2016
MKS Multigas 17707558	FTIR	Dec 22, 2016

Triad Data Available Upon Request

Approved for Release

© Mostardi Platt

Airgas
an Air Liquide company

CERTIFICATE OF ANALYSIS

Grade of Product: EPA Protocol

Airgas Specialty Gases
Airgas USA, LLC
12722 South Wentworth Ave.
Chicago, IL 60628
773-785-3000 Fax: 773-785-1928
Airgas.com

Part Number:	E03NI80E80A7767	Reference Number:	54-124573975-1
Cylinder Number:	XC000730B	Cylinder Volume:	87.4 CF
Laboratory:	ASG - Chicago - IL	Cylinder Pressure:	2214 PSIG
PGVP Number:	B12016	Valve Outlet:	590
Gas Code:	CO2,O2,BALN	Certification Date:	Sep 06, 2016

Expiration Date: Sep 06, 2024

Certification performed in accordance with "EPA Traceability Protocol for Assay and Certification of Gaseous Calibration Standards (May 2012)" document EPA 600/R-12/531, using the assay procedures listed. Analytical Methodology does not require correction for analytical interference. This cylinder has a total analytical uncertainty as stated below with a confidence level of 95%. There are no significant impurities which affect the use of this calibration mixture. All concentrations are on a volume/volume basis unless otherwise noted.

Do Not Use This Cylinder below 100 psig, i.e. 0.7 megapascals.

ANALYTICAL RESULTS

Component	Requested Concentration	Actual Concentration	Protocol Method	Total Relative Uncertainty	Assay Dates
CARBON DIOXIDE	10.00 %	10.26 %	G1	+/- 1.0% NIST Traceable	09/06/2016
OXYGEN	10.00 %	9.798 %	G1	+/- 1.0% NIST Traceable	09/06/2016
NITROGEN	Balance				

CALIBRATION STANDARDS

Type	Lot ID	Cylinder No	Concentration	Uncertainty	Expiration Date
NTRM	13060817	CC416662	24.04 % CARBON DIOXIDE/NITROGEN	+/- 0.6%	May 16, 2019
NTRM	12062016	CC367570	22.88 % OXYGEN/NITROGEN	+/- 0.2%	Apr 24, 2018

ANALYTICAL EQUIPMENT

Instrument/Make/Model	Analytical Principle	Last Multipoint Calibration
CO2-1 HORIBA VIA-510 V1E3H7P5	NDIR	Aug 30, 2016
O2-1 HORIBA MPA-510 3VUYL9NR	Paramagnetic	Aug 22, 2016

Triad Data Available Upon Request

Approved for Release

© Mostardi Platt

Airgas
an Air Liquide company

Airgas Specialty Gases
Airgas USA, LLC
12722 S. Wentworth Ave.
Chicago, IL 60628
Airgas.com

CERTIFICATE OF ANALYSIS

Grade of Product: EPA Protocol

Part Number:	E03NI62E80A0014	Reference Number:	54-124589218-3
Cylinder Number:	LL83683	Cylinder Volume:	92.2 CF
Laboratory:	124 - Chicago - IL	Cylinder Pressure:	2214 PSIG
PGVP Number:	B12016	Valve Outlet:	590
Gas Code:	CO2,O2,BALN	Certification Date:	Dec 02, 2016

Expiration Date: Dec 02, 2024

Certification performed in accordance with "EPA Traceability Protocol for Assay and Certification of Gaseous Calibration Standards (May 2012)" document EPA 600/R-12/531, using the assay procedures listed. Analytical Methodology does not require correction for analytical interference. This cylinder has a total analytical uncertainty as stated below with a confidence level of 95%. There are no significant impurities which affect the use of this calibration mixture. All concentrations are on a volume/volume basis unless otherwise noted.

Do Not Use This Cylinder below 100 psig, i.e. 0.7 megapascals.

ANALYTICAL RESULTS

Component	Requested Concentration	Actual Concentration	Protocol Method	Total Relative Uncertainty	Assay Dates
CARBON DIOXIDE	19.00 %	18.84 %	G1	+/- 0.7% NIST Traceable	12/02/2016
OXYGEN	19.00 %	19.03 %	G1	+/- 0.4% NIST Traceable	12/02/2016
NITROGEN	Balance				

CALIBRATION STANDARDS

Type	Lot ID	Cylinder No	Concentration	Uncertainty	Expiration Date
NTRM	13060817	CC416652	24.04 % CARBON DIOXIDE/NITROGEN	+/- 0.6%	May 16, 2019
NTRM	12062016	CC367570	22.88 % OXYGEN/NITROGEN	+/- 0.2%	Apr 24, 2019

ANALYTICAL EQUIPMENT

Instrument/Make/Model	Analytical Principle	Last Multipoint Calibration
CO2-1 HORIBA VIA-510 V1E3H7P5	NDIR	Nov 22, 2016
O2-1 HORIBA MPA-510 3VUYL9NR	Paramagnetic	Nov 16, 2016

Triad Data Available Upon Request

Approved for Release

© Mostardi Platt

Appendix L – Test Plan Approval Letter and Test Plan

© Mostardi Platt

Northern Metals Test Plan Approval July 25-28, 2017Severin, Marc (MPCA) to: Clay Raasch, JCrivlare (JCrivlare@mp-mail.com), Richard Trzupek 07/06/2017 02:45 PM
Cc: "Severin, Marc (MPCA)"
From: "Severin, Marc (MPCA)" <marc.severin@state.mn.us>
To: Clay Raasch <CRaasch@trinityconsultants.com>, "JCrivlare (JCrivlare@mp-mail.com)" <JCrivlare@mp-mail.com>, Richard Trzupek <rtrzupek@trinityconsultants.com>
Cc: "Severin, Marc (MPCA)" <marc.severin@state.mn.us>
History:
This message has been forwarded.

A COPY OF THE TEST PLAN AND THIS TPAL EMAIL MUST BE INCLUDED IN THE FINAL REPORT

Test Plan Approval Letter

Facility: Northern Metal Recycling
Address: 2800 Pacific St N, Minneapolis, (Hennepin), MN 55411
Contact Person/Phone: Clay Raasch 651-275-990 x2
Test Date: July 25-28, 2017
Test Plan Submittal Date: June 16, 2017
Pretest Meeting Date: July 6, 2017
Units to be Tested: Common Stack (STRU1, formerly SV01) serving Shredder (EQUI1, formerly EU001) and Cascade Cleaning System (EQUI2, formerly EU002)
Agency Interest ID: 262

Your test plan has been approved by the Minnesota Pollution Control Agency (MPCA) as follows:

Test plan approved with the following provisions:

1. Include in the final test report all process and pollution control equipment operating data collected at 15 minute intervals (minimum) and averaged for each test run and test. This information must be clear easily understood by individuals not familiar with the process. All information needed to show process operating rate and pollution control equipment compliant operation must be included. A link to reporting forms can be found below.
2. An acceptable report must comply with Minn. Rule 7017.2035 PERFORMANCE TEST REPORTING REQUIREMENTS. Use of the PTRCC form will help assure that a complete test report is submitted to the MPCA.
3. Performance testing to be conducted to determine emissions of the following pollutants: Hexavalent Chromium, Asbestos, Dioxin/Furan, Polychlorinated Biphenyls (PCB), Total Hydrocarbons & Opacity.

Marc Severin
Pollution Control Specialist 3
Minnesota Pollution Control Agency
520 Lafayette Road No.
St. Paul, Minnesota 55155-4194
651-757-2716
marc.severin@state.mn.us

The following forms are available at http://www.pca.state.mn.us/jsrid16
Operating Data Summary – Process Sources
Report Certifications Form
Performance Test Report Completeness Criteria (PTRCC)

All periods of noncompliance with emission limits must be reported to the MPCA, this includes any periods of engineering tests. The requirements outlined under the Notification of Deviations Endangering Human Health or the Environment, Minn. R. 7019.1000, subp. 1., shall be followed. This information should also be clearly stated and readily available in the executive summary of the test report.

Please be aware that enforcement action will be taken for performance test failures indicating emissions above applicable limits (excess actual emissions to the environment). Failures commonly result in assessment of a monetary penalty. Upon the first test failure, the Company should take immediate measures to minimize emissions. The measures taken should be documented, as they will become part of the record of corrective actions.

(Preferred) Electronic copies of the test report submitted to SubmitStackTest.PCA@state.mn.us
If an electronic copy of the complete test report is submitted the paper and CD copies are not required. Please follow requirements outlined in Method 1 of the document found at this link:
https://www.pca.state.mn.us/sites/default/files/aq1-39.pdf

Hard Copy Performance Test Reports and Microfiche or CD Copy submittals will be addressed to:
Air Quality Compliance Tracking Coordinator
Industrial Division
Minnesota Pollution Control Agency
520 Lafayette Road North
St. Paul, Minnesota 55155-4194

mostardi platt

Compliance Emissions Test Protocol

Northern Metals, LLC
Pacific Street Yard Facility
2800 Pacific Street North
Minneapolis, Minnesota 55411
Permit Number 05300480-003
Protocol No. M173006

© Mostardi Platt

mostardi platt

Compliance Emissions Test Protocol

Northern Metals, LLC
Pacific Street Yard Facility
2800 Pacific Street North
Minneapolis, Minnesota 55411
Permit Number 05300480-003

Protocol Submittal Date:
June 15, 2017

Submitted By

Jeffrey M. Crivlare
(630) 993-2100, Phone
jcrivlare@mp-mail.com, Email

© Copyright 2017
All rights reserved in
Mostardi Platt

Protocol No. M173006

888 Industrial Drive
Elmhurst, Illinois 60126
630-993-2100

TABLE OF CONTENTS

1.0 INTRODUCTION 1

2.0 PROCESS DESCRIPTION 2

3.0 SPECIFIC TEST PROCEDURES 3

4.0 PROJECT SCHEDULE 4

5.0 PROJECT PERSONNEL 4

6.0 TEST METHODOLOGY 5
- Method 1 Sample and Velocity Traverse Determination 5
- Method 2 Volumetric Flow Rate Determination 5
- Method 3A Oxygen (O_2) and Carbon Dioxide (CO_2) Determination 5
- Asbestos Determination 5
- Method 9 Visual Emission Determinations 6
- Method 23 Dioxin and Furan and Polychlorinated Biphenyl Determination 6
- Method 25A Volatile Organic Compound (VOC) Determination 7
- Methane (CH_4) Determination 7
- Mercury Determination by Method 30B (Sorbent Trap Method) 7
- Method 0061 Hexavalent Chromium Determination 8
- Sample Recovery 8

7.0 QUALITY ASSURANCE PROCEDURES 8

GENERAL INFORMATION APPENDED

- Test Section Diagram
- Sample Train Diagrams
- Calculation Nomenclature and Formula
- Calibration Data
- Field Data Sheets
- Plant Diagram

© Mostardi Platt

1.0 INTRODUCTION

MOSTARDI PLATT will be performing a compliance emissions test program on the Common Stack at the Pacific Street Yard Facility operated by Northern Metals, LLC in Minneapolis, Minnesota.

The pollutants tested, emissions limits, and the method citation, are summarized below.

Pollutant Tested	Emission Limits	Method Citation
Hexavalent Chromium (Cr^{+6})	1.40 lb/yr	USEPA Method 0061, SW-846 Sampling and Analytical Test Methods
Asbestos	N/A	Sampled by USEPA Method 5, 40CFR60, Appendix A, and analyzed by transmission electron microscopy (TEM) according to a modified Yamate Level II method
Mercury (Hg)	3.0 lb/yr	USEPA Method 30B, 40CFR60, Appendix A
Dioxin/Furan (D/F)	N/A	USEPA Method 23, 40CFR60, Appendix A
Polychlorinated Biphenyls (PCB)	N/A	Sampled by USEPA Method 23, 40CFR60, Appendix A and analyzed by Method 0010 PCB Congeners Method M1668A, or California Air Resource Board (CARB) Method 428 if required by the Minnesota Pollution Control Authority (MPCA)
Total Hydrocarbons (THC)	N/A	USEPA Method 25A and 18 (Methane Only) if required, 40CFR60, Appendix A
Visible Emissions	Opacity ≤20 % maximum for any 6-minute period	USEPA Method 9, 40CFR60, Appendix A

The identifications of the individuals associated with the test program are summarized below.

Role/Title	Address	Contact
Test Coordinator	Pacific Street Yard Facility 2800 Pacific Street North Minneapolis, Minnesota 55411	Scott Helberg Chief Operating Officer (612) 529-9221 (phone)
Testing Company Representative	Mostardi Platt 888 Industrial Road Elmhurst, Illinois 60126	Jeffrey Crivlare Senior Project Manager (630) 993-2100 (phone) jcrivlare@mp-mail.com

© Mostardi Platt

© Mostardi Platt

2.0 PROCESS DESCRIPTION

Northern Metals, LLC is a metal recycling company whose wholly-owned subsidiary, American Iron & Supply Company, operates the Pacific Street Yard Facility at 2800 Pacific Street North.- Minneapolis, Minnesota. The facility includes 12 acres of property and five buildings: the Office Building, the South Warehouse (attached to the Office Building), the Metal Shredder Building, the North Warehouse, and Metal Recycling Plant Building (which includes the attached Rain and Snow Shed) and the Scale Building. The Pacific Street Yard accepts most grades of bulk quantity commercial, industrial, and demolition scrap metal and processes it for sale to customers such as steel mills, foundries, smelting plants, or primary aluminum plants. The Facility operates a Metso Texas hammer mill metal shredder. The shredder consist of the in-feed conveyor system, the shredder itself, size separation equipment (referred to collectively as the cascade cleaning system), initial magnetic separation equipment, manual separation stations, finished product conveyor system, and the associated air pollution control equipment. For the purpose of this protocol, the shredder (EU001) itself and the cascade cleaning system (EU002) are each considered an emission unit. The control equipment design uses two exhaust streams- one from the shredder and one from the cascade cleaning system. Each exhaust system is controlled by a high efficiency cyclone, a wet scrubber, and a fabric filtration system. The controlled emissions from the two exhaust streams vent through a single stack (Common Stack SV001). Northern Metals intend to install temporary cameras fixed on gauges of cyclones pressure drop, scrubber water level sight glasses and baghouse pressure drops. Cameras may be used to provide remote viewing in order to record data at 15-minute intervals during testing. The control equipment, monitored parameters and current permit limits are summarized below.

The exhaust flow rate is expected in the 90,000 dry standard cubic feet per minute (DSCFM) range.

Control equipment ID	**Control Equipment nomenclature**	**Monitored parameters** Control device parameters at minimum of 15 minute intervals during the test	**Current Permit Limits**
EU001	Cyclone CE001	Pressure drop, inches w.c.	1.0"-11.0"
	Scrubber CE004	Pressure drop, inches w.c.	4.0"-9.0"
		Water level in sight glass (level to top)	7.0"-7.5"
	Fabric Filter CE006	Pressure drop, inches w.c.	2.0"-8.0"
EU002	Cyclone	Pressure drop, inches w.c.	No Limit
	Scrubber CE005	Pressure drop, inches w.c.	4.0"-9.0"
		Water level in sight glass (level to top)	7.0"-7.5"
	Fabric Filter CE007	Pressure drop, inches w.c.	1.8"-8.0"

© Mostardi Platt

© Mostardi Platt

3.0 SPECIFIC TEST PROCEDURES

Detailed test methodology is appended. Test runs will be performed in accordance with the following USEPA Methods. Testing will be performed at 90% or greater of the determined worst case condition of 190 tons per hour. Ninety percent of worst case is 171 tons per hour and will be the targeted metal shredding rate for testing.

1. Volumetric flow will be obtained utilizing United States Environmental Protection Agency (USEPA) Methods 1, 2, and 3A, Title 40, Code of Federal Regulations Part 60, (40CFR60), Appendix A, in conjunction with the Method 5, Method 23, and Method 0061 test runs.

2. Three (3) two-hour hexavalent chromium (Cr^{+6}) test runs will be performed at the combined stack location in accordance with United States Environmental Protection Agency (USEPA) Method 0061, SW-846 Sampling and Analytical Test Methods.

3. Three (3) two-hour asbestos test runs will be performed at the combined stack location utilizing a Teflon filter in accordance with United States Environmental Protection Agency (USEPA) Method 5, Title 40, *Code of Federal Regulations*, Part 60 (40CFR60), Appendix A, and analyzed by transmission electron microscopy (TEM) according to a modified Yamate Level II method.

4. Three (3) one-hour opacity test runs will be performed at the combined stack location in accordance with USEPA Method 9, 40CFR60, Appendix A.

5. Three (3) one-hour mercury (Hg) test runs will be performed at the combined stack location in accordance with USEPA Method 30B, 40CFR60, Appendix A. On-site analyses utilizing an Ohio Lumex analyzer will be conducted.

6. Three (3) four-hour dioxin/furan (D/F) and polychlorinated biphenyls (PCB) test runs will be performed in accordance with USEPA Methods 1, 2, 3A, and 23, 40CFR60, Appendix A. The D/F will be analyzed by Method 23.The PCBs will be analyzed by Method 0010 PCB Congeners Method M1668A, or California Air Resource Board (CARB) Method 428 if required by the Minnesota Pollution Control Authority (MPCA).

7. Three (3) one-hour total gaseous hydrocarbon (THC) test runs will be performed in accordance with United States Environmental Protection Agency (USEPA) Methods 1 or 1A, 2, 3A, and 25A, 40CFR60, Appendix A. A pretest and post-test volumetric flow will be performed and averaged for each THC gaseous test run.

   If required, integrated Tedlar bag samples will be taken during each test run and analyzed for methane concentrations for total gaseous non-methane hydrocarbon determinations by USEPA Method 18, 40CFR60, Appendix A.

8. All testing will be performed from the top portion of the four inch sample port locations so as to meet the two equivalent downstream diameter criteria of 138.75 inches and the one-half equivalent upstream diameter criteria of 34.69 inches for the 69.375 inch stack.

9. During the performance test, the following will be recorded:

   The total weight of material output, and, at a minimum of 15 minute intervals, the control device parameters.

   Northern Metals will record the parameters specified below:
   CE 001 - pressure drop in inches of water column
   CE 004 - pressure drop in inches of water column, and scrubber liquid level
   CE 005 - pressure drop in inches of water column, and scrubber liquid level
   CE 006 - pressure drop in inches of water column
   CE 007 - pressure drop in inches of water column

4.0 PROJECT SCHEDULE

Mostardi Platt will provide the scope of services described above according to the following schedules:

Day	Activity	On-Site Hours
1	Travel to facility and set up equipment.	4
2	Perform two four-hour D/F and PCB tests. Perform three two-hour asbestos tests.	10
3	Perform one four-hour D/F and PCB tests. Perform three two-hour Cr^{+6} tests.	10
4	Perform three one-hour Hg tests. Perform three one-hour THC tests. Perform three one-hour opacity tests.	8
5	Return to office.	---

5.0 PROJECT PERSONNEL

Mostardi Platt will provide the following personnel to conduct the scope of services described above:

1 Project Manager
2 Test Engineers
1 Test Technician
1 Visual Emissions Reader

© Mostardi Platt

© Mostardi Platt

6.0 TEST METHODOLOGY

Emission testing will be conducted following the methods specified in 40CFR60, Appendix A. Schematics of the sampling trains and data sheets to be used are included in the Appendix.

The following methodologies will be performed during the test program:

Method 1 Sample and Velocity Traverse Determination

Test measurement points are selected in accordance with Method 1, 40 CFR, Part 60, Appendix A. The characteristic of the measurement location is summarized below.

Sample Point Selection

Test Location	Stack Diameter	Upstream Distance	Downstream Distance	Test Parameters	Number of Sampling Points
Common Stack SV001	69.375"	0.5	2.0	Asbestos, Dioxins, Furans, PCBs, Cr^{+6}	24

Method 2 Volumetric Flow Rate Determination

Gas velocity will be measured following Method 2, 40CFR60, Appendix A, for purposes of calculating stack gas volumetric flow rate. An S-type pitot tube, differential pressure gauge, thermocouple and temperature readout will be used to determine gas velocity at each sample point. All of the equipment used will be calibrated in accordance with the specifications of the Method. Calibration data is presented in the Appendix of the final report.

Method 3A Oxygen (O_2) and Carbon Dioxide (CO_2) Determination

Stack gas O_2 and CO_2 concentrations will be determined in accordance with Method 3A, 40CFR60, Appendix A. A Servomex or Ecom analyzer will be used to determine O_2 and CO_2 concentrations during the sampling. The instrument has a non-dispersive infrared-based detector and operated in a range of 0% to the high-level span calibration gas.

A list of calibration gases that are used and the results of all calibration and other required quality assurance checks will be found in the Appendix of the final report. Copies of calibration gas certifications will also be found in the Appendix of the final report.

Asbestos Determination

Stack gas asbestos concentrations and emission rates are determined in accordance with Method 5, and analyzed by transmission electron microscopy (TEM) according to a modified Yamate Level II method.

The probe and filter housing will be maintained at a temperature of 248°F +/- 25°F. An Environmental Supply Company, Inc. sampling train is used to sample stack gas at an isokinetic rate. Four impingers will be utilized. The impingers will be weighed prior to and after each test run in order to determine moisture content of the stack gas. The total sample time will be at least 60 minutes, with twenty-four sample points being utilized. A minimum of 40 dry standard cubic feet will be sampled for each run.

© Mostardi Platt

© Mostardi Platt

Asbestos matter in the sample probe will be recovered utilizing acetone; a minimum of three passes of the probe brush through the entire probe will be performed, followed by a visual inspection of the acetone exiting the probe. If the acetone solution exiting the probe is clear, the wash will be considered complete, if not, another pass of the brush through the probe will be made and inspected until the solution is clear. The nozzle will then be removed from the probe and cleaned in a similar manner, utilizing an appropriately sized nozzle brush. The filter housing will be washed a minimum of three times with acetone and inspected for cleanliness, and the filter will be placed in its corresponding petri dish. The acetone wash and the filter will be labeled and marked, then shipped by Mostardi Platt personnel and analyzed off site by an approved laboratory in accordance with the method.

All of the equipment used is calibrated in accordance with the specifications of the Method. Calibration data is presented in the Appendix of the final report.

Method 9 Visual Emission Determinations

Visible emissions will be determined in accordance with Method 9. The duration of the Method 9 performance tests will be 60 minutes with readings taken within a 15-second interval. The sun will be oriented in the 140-degree sector of the back of the observer. Visible emissions observations will be conducted and recorded by a certified visual emissions observer. A copy of that person's certification will be presented in the Appendix of the Report.

If emissions are not able to be read during the TPM tests due to inclement weather, readings will be performed at a later date under comparable plant operations mutually agreeable to Northern Metals, LLC, Mostardi Platt, and the Minnesota Pollution Control Authority.

Method 23 Dioxin and Furan and Polychlorinated Biphenyl Determination

Stack gas dioxin and furan and polychlorinated biphenyls concentrations and emission rates will be determined in accordance with Method 23, 40 CFR, Part 60, Appendix A. An Environmental Supply Company sampling train will be used to sample for concentrations of dioxins and furans, in the manner specified in the Method.

The PCBs will be analyzed by Method 0010 PCB Congeners Method M1668A, or California Air Resource Board (CARB) Method 428 if required by the Minnesota Pollution Control Authority (MPCA).

After recovery, samples will analyzed by SGS - Analytical Perspectives of Wilmington, North Carolina following the procedures specified in the Method. Laboratory analysis data will be found in the Appendix of the final report. All of the equipment used will be calibrated in accordance with the specifications of the Method. Calibration data will be presented in the Appendix of the final report.

Method 25A Volatile Organic Compound (VOC) Determination

The Method 25A sampling and measurement system meets the requirements for stack sampling of volatile organic compounds (VOCs) set forth by the United States Environmental Protection Agency (USEPA). In particular, it meets the requirements of USEPA Reference Method 25A, "Determination of Total Gaseous Organic Concentration Using a Flame Ionization Analyzer," 40CFR60, Appendix A. This method applies to the measurement of total gaseous organic concentration of hydrocarbons. With this method, gas samples are extracted from the sample locations through heated Teflon sample lines to the analyzers.

The flame ionization detectors (FIDs) to be used during this program are VIG High-Temperature Total Hydrocarbon Analyzers. They are highly sensitive FIDs that provide a direct reading of total organic vapor concentrations with linear ranges of 0-10, 100, 1000, and 10,000 ppm by volume. The instruments are calibrated using ultra-zero air and propane in air EPA Protocol standards. The calibrations are performed before and after sampling with calibration checks performed between each test run. Sampling is conducted continuously for three one-hour periods for VOC tests. Sample times and locations are logged on data loggers. Final concentrations are determined by subtracting methane and ethane from the Method 18 analysis, if applicable, from the outlet concentration.

Calculations are performed by computer or by hand. An explanation of the nomenclature and calculations along with the complete test results is included in the appendix. Also appended are calibration data and copies of the raw field data sheets.

Methane (CH_4) Determination

The Method 18, 40CFR60, sampling and measurement system meets the requirements for stack sampling of gaseous organic compounds set forth by the United States Environmental Protection Agency (USEPA). In particular, it meets the requirements of USEPA Reference Method 18, "Determination of Gaseous Organic Compound Emissions by Gas Chromatography," 40CFR60, Appendix A. This method applies to the analysis of approximately 90% of the total gaseous organics emitted from an industrial source. The major organic components of a gas mixture are separated by gas chromatography, and methane is quantified by a flame ionization detector.

The gas chromatograph to be used during this program is a VIG 200 with a flame ionization detector. This instrument is calibrated using ultra-zero air, methane (CH_4) in nitrogen certified standards. The calibrations are performed before and after sampling with calibration checks performed each day. Sample times and locations are logged on integrator printouts.

Mercury Determination by Method 30B (Sorbent Trap Method)

Paired trains will be utilized using three test points at the test location.

Per Method 30B sampling, each sample will be collected on the paired in-situ sorbent traps. A tube of silica is used to capture remaining moisture prior to the sample reaching the gas metering system.

The sample train used for this test program is designed by APEX, Inc. and meets all requirements for Method 30B sampling. Samples will be analyzed on-site utilizing an Ohio Lumex, Inc. analyzer for mercury concentration.

All of the equipment used is calibrated in accordance with the specifications of the Method.

Method 0061 Hexavalent Chromium Determination

The Cr^{+6} emissions will be collected isokinetically from the source. To eliminate the possibility of Cr^{+6} reduction between the nozzle and impinger, the emission samples are collected with a recirculatory train where the impinger reagent is continuously recirculated to the nozzle. Recovery procedures include a post-sampling purge and filtration. The impinger train samples are analyzed for Cr^{+6} by an ion chromatograph equipped with a post-column reactor and a visible wavelength detector. The IC/PCR separates the Cr^{+6} as chromate (CrO_4) from other diphenylcarbazide reactions that occur in the post-column reactor. To increase sensitivity for trace levels of chromium, a preconcentration system may also be used in conjunction with the IC/PCR.

Sample Recovery

All sample recovery will be performed at the test site by the test crew. Copies of all sample analysis sheets, explanations of nomenclature and calculations, and raw field data sheets are appended to this protocol.

7.0 QUALITY ASSURANCE PROCEDURES

Mostardi Platt recognizes the previously described reference methods to be very technique oriented and attempts to minimize all factors that can increase error by implementing its Quality Assurance Program into every segment of its testing activities.

Calculations are performed by computer. An explanation of the nomenclature and calculations along with the complete test results will be appended in the final report. Also to be appended, are the calibration data and copies of the raw field data sheets. Analyzer interference data is kept on file at Mostardi Platt.

Dry gas meters are calibrated according to methods described in the Code of Federal Regulations. The dry test meters measure the test sample volumes to within 2 percent at the flowrate and conditions encountered during sampling.

© Mostardi Platt

© Mostardi Platt

APPENDIX

 © Mostardi Platt

EQUAL AREA TRAVERSE FOR ROUND DUCTS

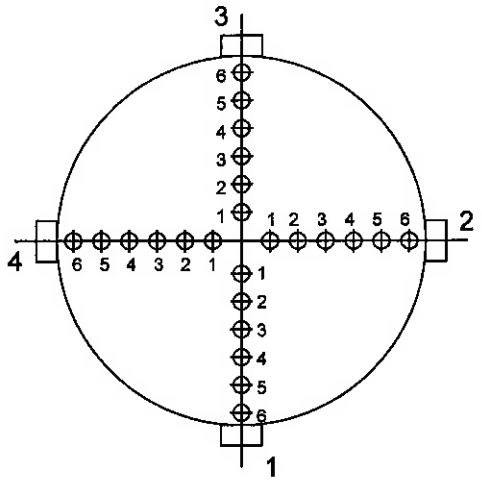

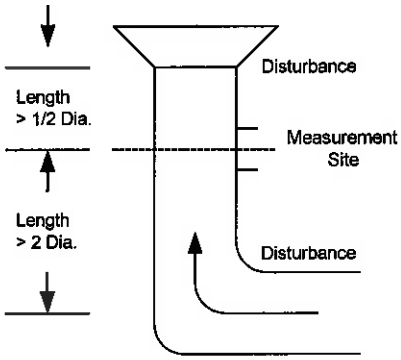

Job:	Northern Metals, LLC Pacific Street Yard Facility 2800 Pacific Street North Minneapolis, Minnesota 55411
Tentative Test Date:	July 24-July 27, 2017
Test Location:	Common Stack (SV001, EU001, EU002)
Stack Diameter:	69.375 Inches
Stack Area:	26.250 Square Feet
Port Length:	6.5 Inches
Port Diameter:	4.0 Inches

© Mostardi Platt

USEPA Method 2- Type S Pitot Tube Manometer Assembly

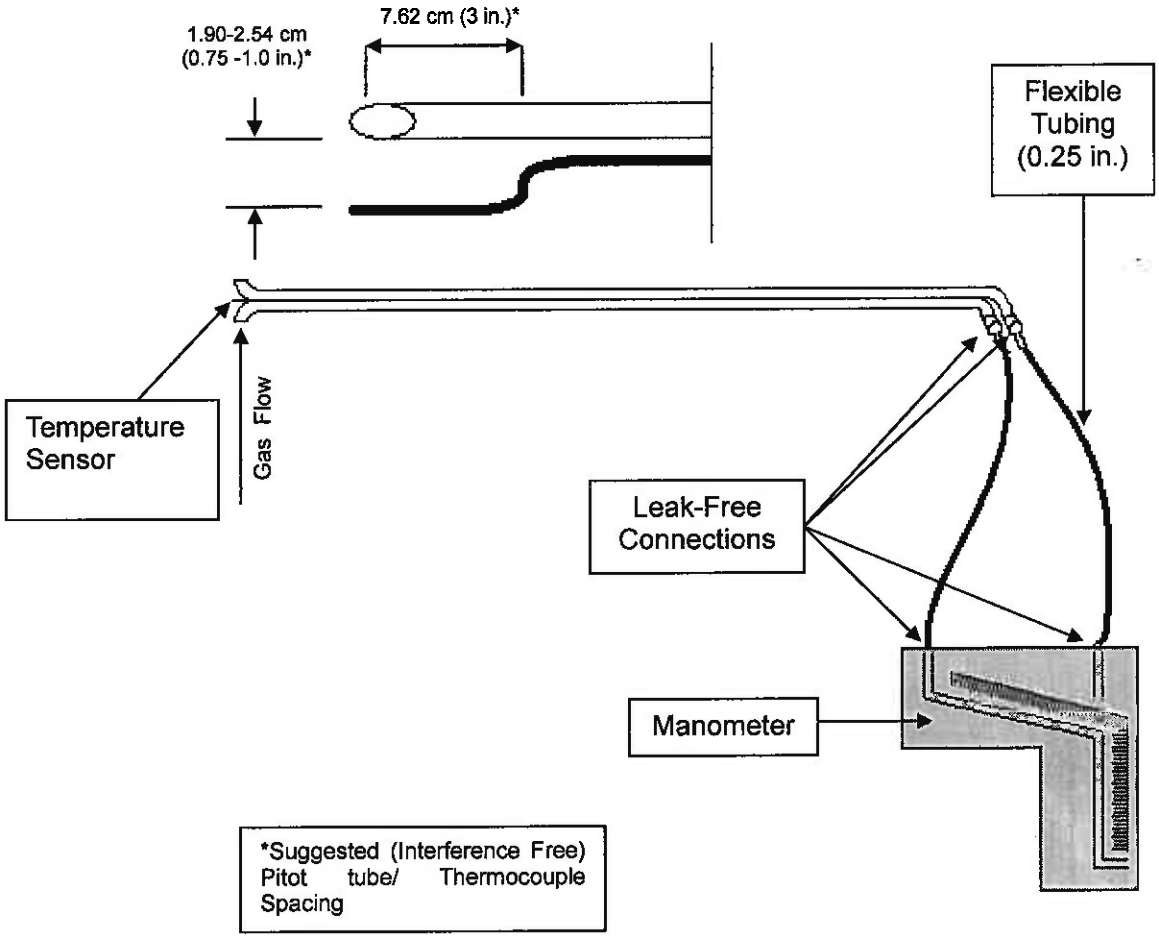

© Mostardi Platt

USEPA Method 3A - Integrated Oxygen/Carbon Dioxide Sample Train Diagram Utilizing ECOM To Measure From Sample Exhaust

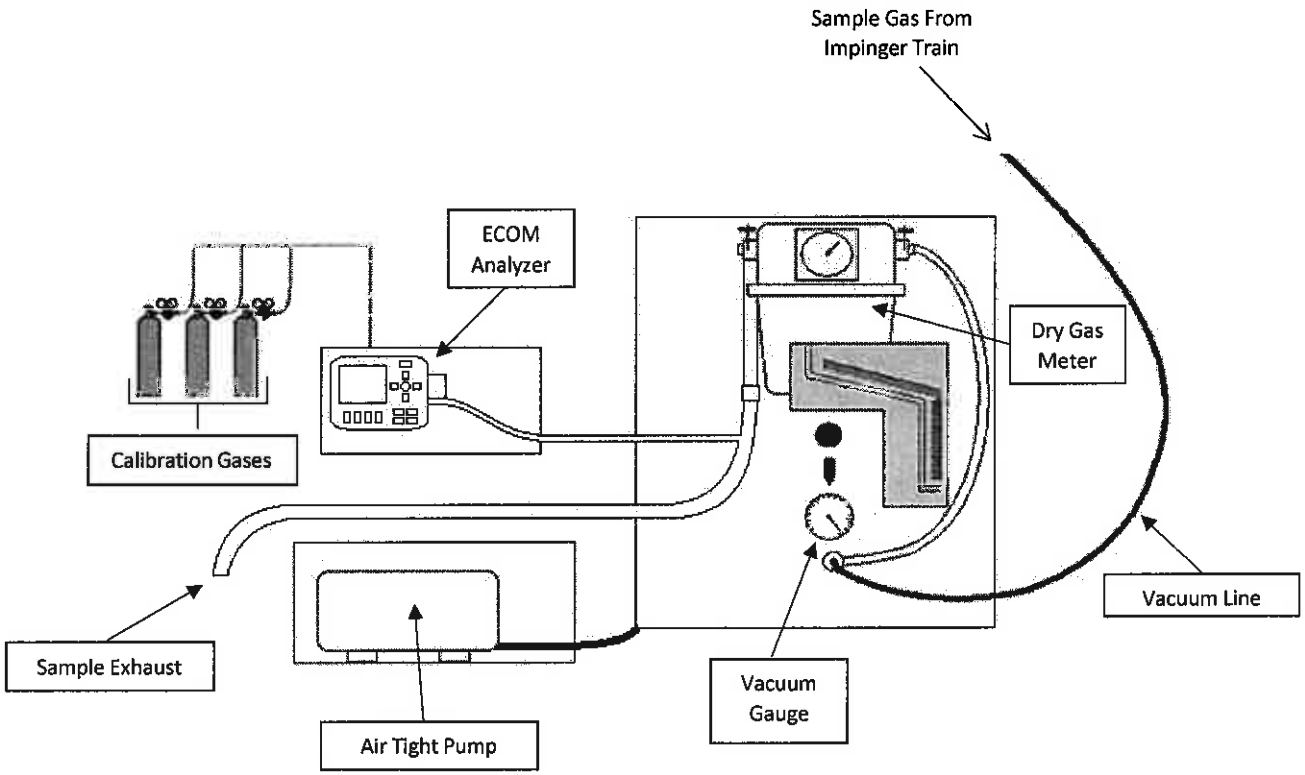

© Mostardi Platt

USEPA Method 5- Particulate Matter Sample Train Diagram

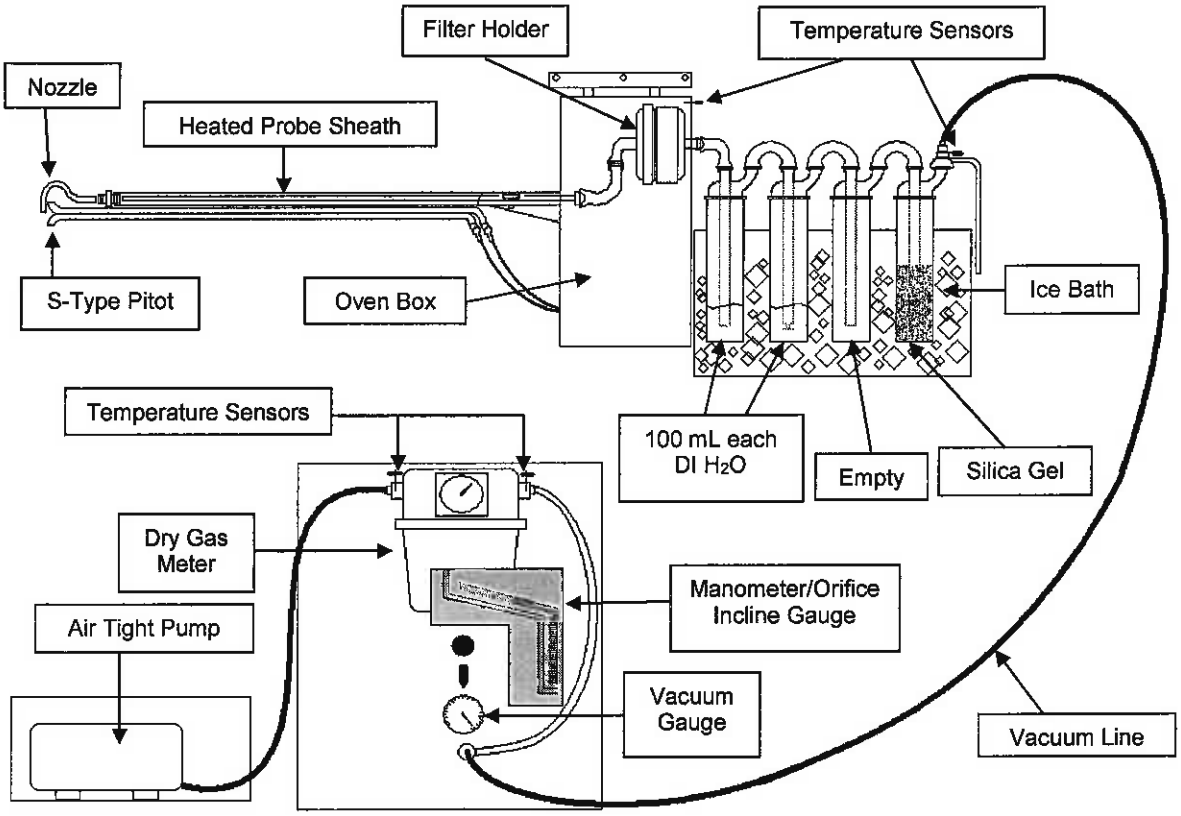

© Mostardi Platt

Method 23 - Determination of Polychlorinated Dibenzo-p-dioxins and Polychlorinated Dibenzofurans from Municipal Waste Combustors

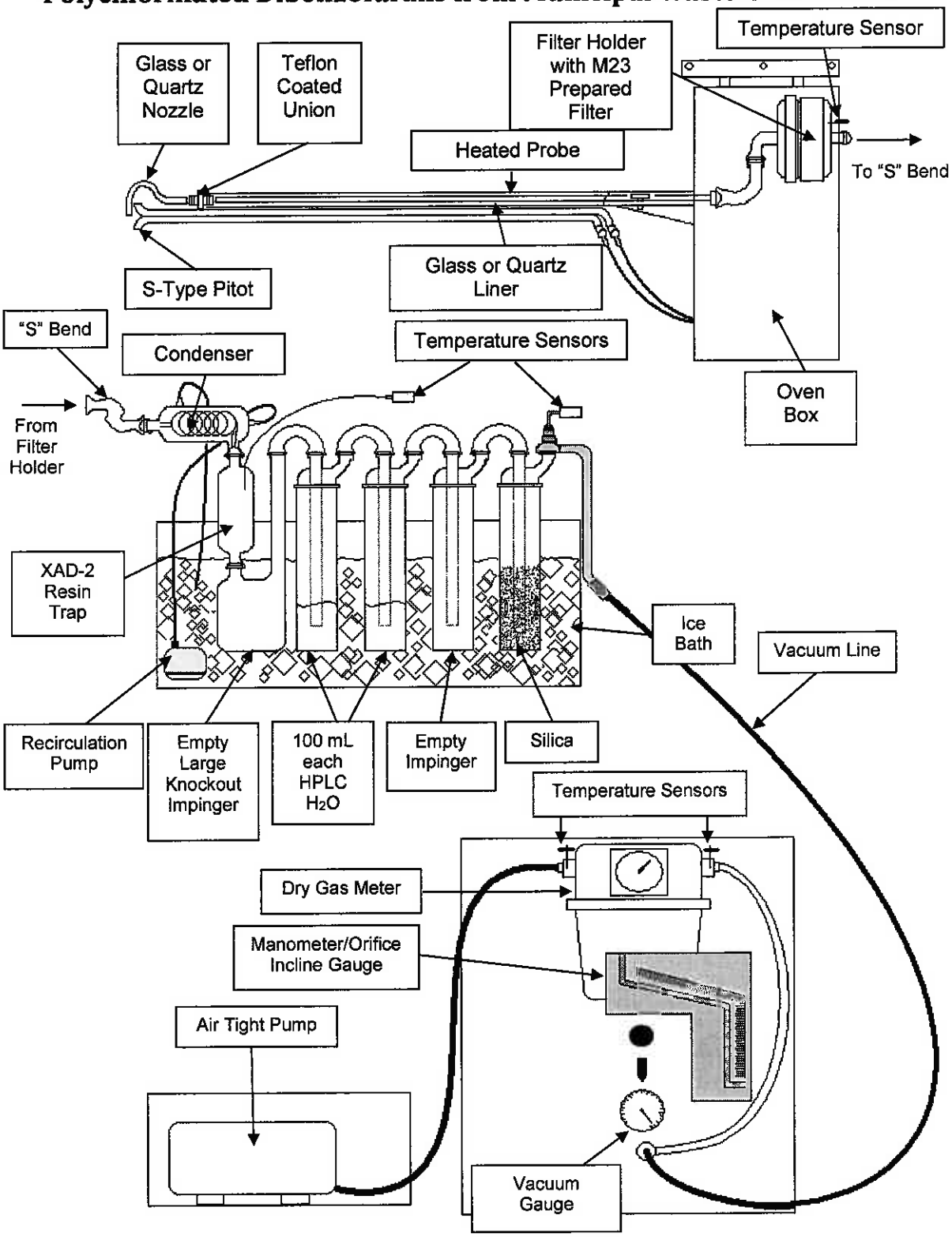

© Mostardi Platt

USEPA Method 25A – Total Gaseous Organic Compound Sample Train

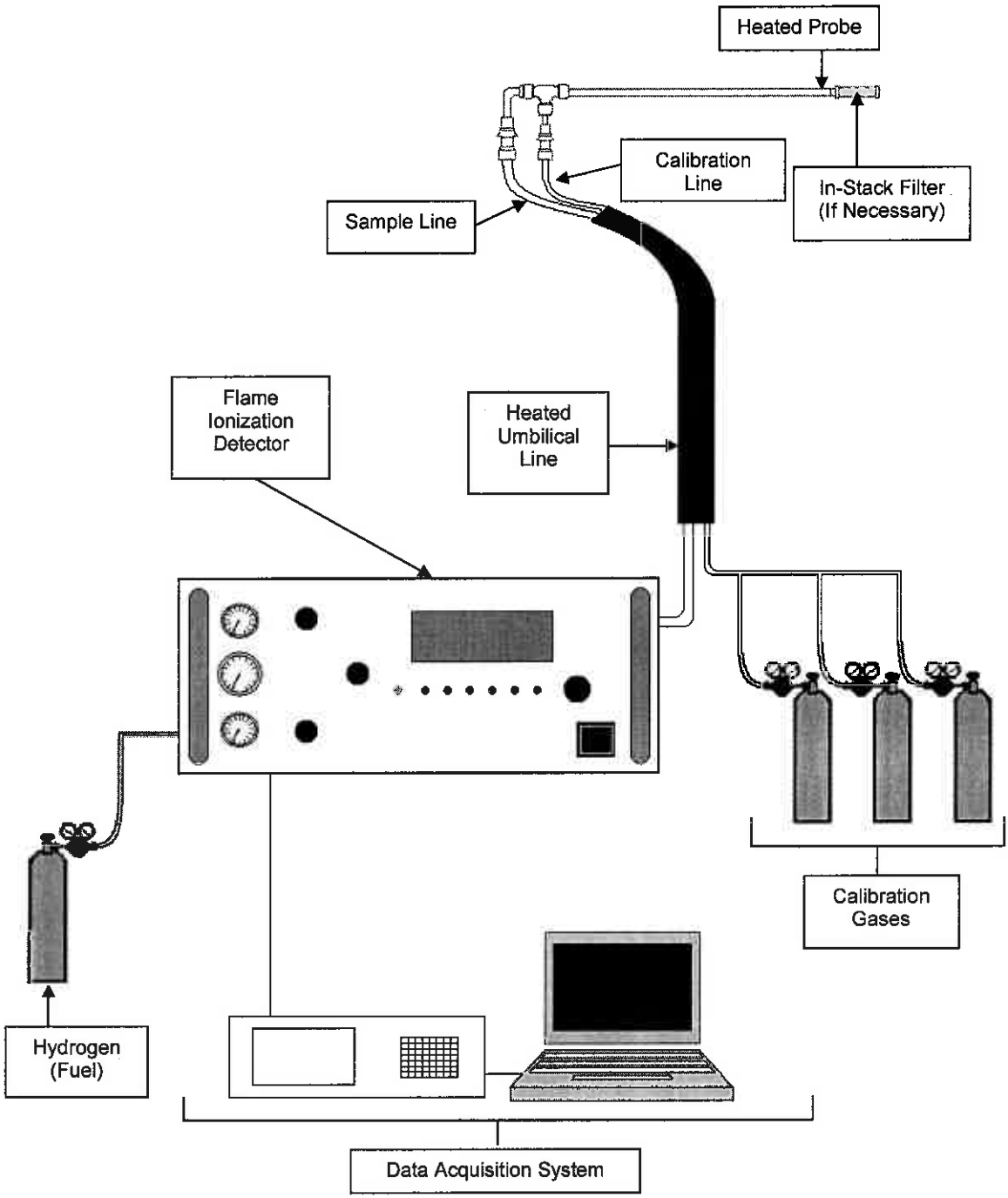

© Mostardi Platt

USEPA Method 30B- Mercury Sorbent Trap Sampling Train

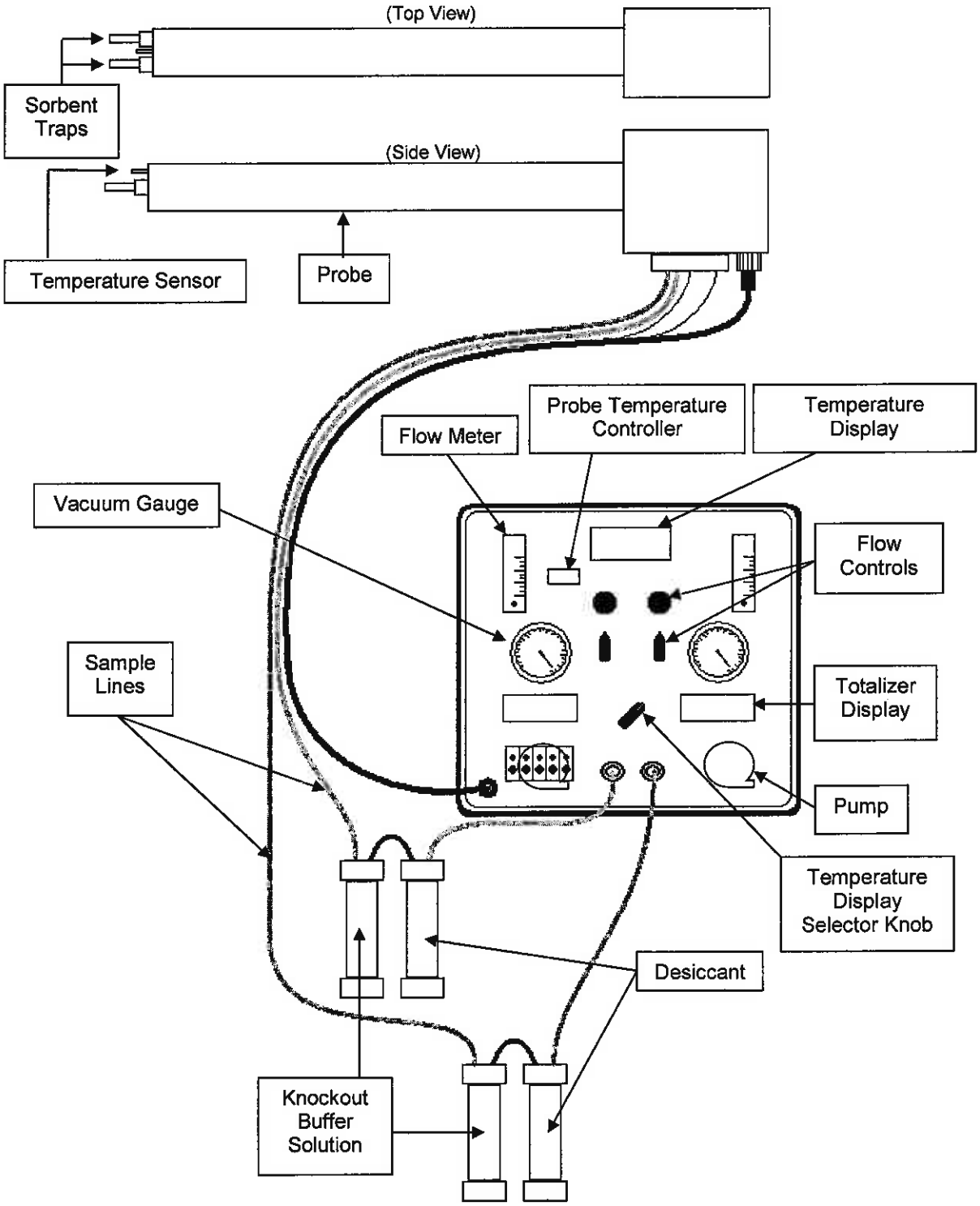

© Mostardi Platt

USEPA Method 0061- Hexavalent Chromium Sampling Train

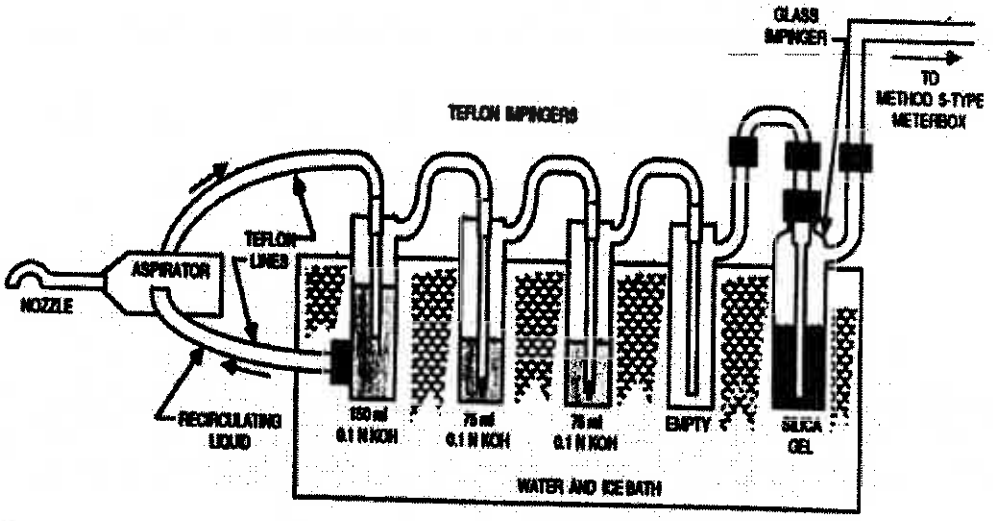

FIGURE 1. TEFLON IMPINGERS - SCHEMATIC OF RECIRCULATORY IMPINGER TRAIN WITH ASPIRATOR ASSEMBLY.

© Mostardi Platt

MOSTARDI PLATT
Particulate Nomenclature

A = Cross-sectional area of stack or duct, square feet
A_n = Cross-sectional area of nozzle, square feet
B_{ws} = Water vapor in gas stream, by volume
C_a = Acetone blank residue concentration, g/g
C_{acf} = Concentration of particulate matter in gas stream at actual conditions, gr/acf
C_p = Pitot tube coefficient
C_s = Concentration of particulate matter in gas stream, dry basis, corrected to standard conditions, gr/dscf
IKV = Isokinetic sampling variance, must be 90.0 % ≤ IKV ≤ 110.0%
M_d = Dry molecular weight of gas, lb/lb-mole
M_s = Molecular weight of gas, wet basis, lb/lb-mole
M_w = Molecular weight of water, 18.0 lb/lb-mole
m_a = Mass of residue of acetone after evaporation, grams
P_{bar} = Barometric pressure at testing site, inches mercury
P_g = Static pressure of gas, inches mercury (inches water/13.6)
P_s = Absolute pressure of gas, inches mercury = $P_{bar} + P_g$
P_{std} = Standard absolute pressure, 29.92 inches mercury
Q_{acfm} = Actual volumetric gas flow rate, acfm
Q_{sd} = Dry volumetric gas flow rate corrected to standard conditions, dscfh
R = Ideal gas constant, 21.85 inches mercury cubic foot/°R-lb-mole
T_m = Dry gas meter temperature, °R
T_s = Gas temperature, °R
T_{std} = Absolute temperature, 528°R
V_a = Volume of acetone blank, ml
V_{aw} = Volume of acetone used in wash, ml
W_a = Weight of residue in acetone wash, grams
m_n = Total amount of particulate matter collected, grams
V_{1c} = Total volume of liquid collected in impingers and silica gel, ml
V_m = Volume of gas sample as measured by dry gas meter, dcf
$V_{m(std)}$ = Volume of gas sample measured by dry gas meter, corrected to standard conditions, dscf
v_s = Gas velocity, ft/sec
$V_{w(std)}$ = Volume of water vapor in gas sample, corrected to standard conditions, scf
Y = Dry gas meter calibration factor
ΔH = Average pressure differential across the orifice meter, inches water
Δp = Velocity head of gas, inches water
ρ_a = Density of acetone, 0.7855 g/ml (average)
ρ_w = Density of water, 0.002201 lb/ml
θ = Total sampling time, minutes
K_1 = 17.647 °R/in. Hg
K_2 = 0.04707 ft^3/ml
K_4 = 0.09450/100 = 0.000945

K_p = Pitot tube constant,
%EA = Percent excess air
$\%CO_2$ = Percent carbon dioxide by volume, dry basis

$\%O_2$ = Percent oxygen by volume, dry basis
%CO = Percent carbon monoxide by volume, dry basis
$\%N_2$ = Percent nitrogen by volume, dry basis
0.264 = Ratio of O_2 to N_2 in air, v/v
28 = Molecular weight of N_2 or CO
32 = Molecular weight of O_2
44 = Molecular weight of CO_2
13.6 = Specific gravity of mercury (Hg)

© Mostardi Platt

MOSTARDI PLATT

Particulates Calculation Formulas

1. $V_{w(std)} = V_{lc}\left(\frac{\rho_w}{M_w}\right)\left(\frac{RT_{std}}{P_{std}}\right) = K_2 V_{lc}$

2. $V_{m(std)} = V_m Y \left(\frac{T_{std}}{T_m}\right)\left(\frac{(P_{bar} + (\frac{\Delta H}{13.6}))}{P_{std}}\right) = K_1\ V_m\ Y \frac{(P_{bar} + (\frac{\Delta H}{13.6}))}{T_m}$

3. $B_{ws} = \frac{V_{w(std)}}{(V_{m(std)} + V_{w(std)})}$

4. $M_d = 0.44(\%CO_2) + 0.32(\%O_2) + 0.28(\%N_2)$

5. $M_s = M_d(1 - B_{ws}) + 18.0(B_{ws})$

6. $C_a = \frac{m_a}{V_a \rho_a}$

7. $W_a = C_a V_{aw} \rho_a$

8. $C_{acf} = 15.43 K_i \left(\frac{m_n P_s}{V_{w(std)} + V_{m(std)}\ T_s}\right)$

9. $C_S = (15.43\ \text{grains/gram})\ (m_n / V_{m(std)})$

10. $v_s = K_p C_p \sqrt{\frac{\Delta P\ T_s}{P_s M_s}}$

11. $Q_{acfm} = v_s A(60_{sec/min})$

12. $Q_{sd} = (3600_{sec/hr})(1 - B_{ws})\ v_s \left(\frac{T_{std} P_s}{T_s P_{std}}\right) A$

13. $E\ (\text{emission rate, lbs/hr}) = Q_{std}(C_s / 7000\ \text{grains/lb})$

14. $IKV = \frac{T_s V_{m(std)} P_{std}}{T_{std} v_s \theta A_n P_s 60(1 - B_{ws})} = K_4 \frac{T_s V_{m(std)}}{P_s v_s A_n \theta (1 - B_{ws})}$

15. $\%EA = \left(\frac{\%O_2 - (0.5\%CO)}{0.264\%N_2 - (\%O_2 - 0.5\%CO)}\right) \times 100$

© Mostardi Platt

MOSTARDI PLATT

Volumetric Air Flow Calculations

$$Vm\ (std) = 17.647 \times Vm \times \left[\frac{(P_{bar} + (\frac{DH}{13.6}))}{(460 + Tm)} \right] \times Y$$

$$Vw\ (std) = 0.0471 \times Vlc$$

$$Bws = \left[\frac{Vw\ (std)}{Vw\ (std) + Vm\ (std)} \right]$$

$$Md = (0.44 \times \%CO_2) + (0.32 \times \%O_2) + [0.28 \times (100 - \%CO_2 - \%O_2)]$$

$$Ms = Md \times (1 - Bws) + (18 \times Bws)$$

$$Vs = \sqrt{\frac{(Ts + 460)}{Ms \times Ps}} \times \sqrt{DP} \times Cp \times 85.49$$

$$Acfm = Vs \times Area\ (of\ stack\ or\ duct) \times 60$$

$$Scfm = Acfm \times 17.647 \times \left[\frac{Ps}{(460 + Ts)} \right]$$

$$Scfh = Scfm \times 60 \frac{min}{hr}$$

Dscfm = Scfm x (1-Bws)

© Mostardi Platt

MOSTARDI PLATT

Moisture Calculations

$$V_{wc(std)} = \frac{(V_f - V_i)\,\rho_w\,R\,T_{std}}{P_{std}M_w} = 0.04707(V_f - V_i)$$

$$V_{wsg(std)} = \frac{(W_f - W_i)\,R\,T_{std}}{P_{std}\,M_w} = 0.04715\,(W_f - W_i)$$

$$V_{m(std)} = 17.64\;V_m\,Y\frac{P_{bar} + \frac{\Delta H}{13.6}}{T_m}$$

$$B_{ws} = \frac{V_{wc(std)} + V_{wsg(std)}}{V_{wc(std)} + V_{wsg(std)} + V_{m(std)}}$$

Where:

B_{ws} = Water vapor in gas stream, proportion by volume
M_w = Molecular weight of water, 18.015 lb/lb-mole
P_{bar} = Barometric pressure at the testing site, in. Hg
P_{std} = Standard absolute pressure, 29.92 in. Hg
R = Ideal gas constant, 0.048137 (in. Hg)(ft^3)/(g-mole)(°R) = [21.8348(in. Hg)(ft^3)/(lb-mole)(°R)]/453.592 g-mole/lb-mole
T_m = Absolute average dry gas meter temperature, °R
T_{std} = Standard absolute temperature, 528 °R
V_f = Final volume of condenser water, ml
V_i = Initial volume of condenser water, ml
V_m = Dry gas volume measured by dry gas meter, dcf
$V_{m(std)}$ = Dry gas volume measured by dry gas meter, corrected to standard conditions, scf
$V_{wc(std)}$ = Volume of condensed water vapor, corrected to standard conditions, scf
$V_{wsg(std)}$ = Volume of water vapor collected in silica gel, corrected to standard conditions, scf
W_f = Final weight of silica gel, g
W_i = Initial weight of silica gel, g
Y = Dry gas meter calibration factor
ΔH = Average pressure exerted on dry gas meter outlet by gas sample bag, in. H_2O
ρ_w = Density of water, 0.9982 g/ml
13.6 = Specific gravity of mercury (Hg)
17.64 = T_{std}/P_{std}
0.04707 = ft^3/ml 0.04715 = ft^3/g

© Mostardi Platt

MOSTARDI PLATT

Trace Metal (Including Mercury) Sample Calculations

Concentration

$$\frac{\mu g}{m^3} = \frac{\mu g\ of\ trace\ metal}{dscf\ volume\ sampled \times 0.02832 \frac{m^3}{ft^3}}$$

Emission Rate

$$\frac{\mu g\ of\ sample \times \frac{1 \times 10^{-6} grams}{\mu g}}{453.6\ gr/lb} = lbs\ of\ trace\ metal$$

$$\frac{lbs\ of\ trace\ metal}{V_m(std)sample} \times dscfm \times 60 \frac{min}{hr} = lbs\ of\ trace\ metal/hr$$

© Mostardi Platt

Procedures for Calibration

Nozzles

The nozzles are measured according to Method 5, Section 5.1

Dry Gas Meters

The test meters are calibrated according to Method 5, Section 5.3 and "Procedures for Calibrating and Using Dry Gas Volume Meters as Calibration Standards" by P.R. Westlin and R.T. Shigehara, March 10, 1978.

Analytical Balance

The accuracy of the analytical balance is checked with Class S, Stainless Steel Type 303 weights manufactured by F. Hopken and Son, Jersey City, New Jersey.

Temperature Sensing Devices

The potentiometer and thermocouples are calibrated utilizing a NBS traceable millivolt source.

Pitot Tubes

The pitot tubes utilized during this test program are manufactured according to the specification described and illustrated in the *Code of Federal Regulations*, Title 40, Part 60, Appendix A, Methods 1 and 2. The pitot tubes comply with the alignment specifications in Method 2, Section 4; and the pitot tube assemblies are in compliance with specifications in the same section.

 © Mostardi Platt

Dry Gas Meter Calibration Sample Train Diagram

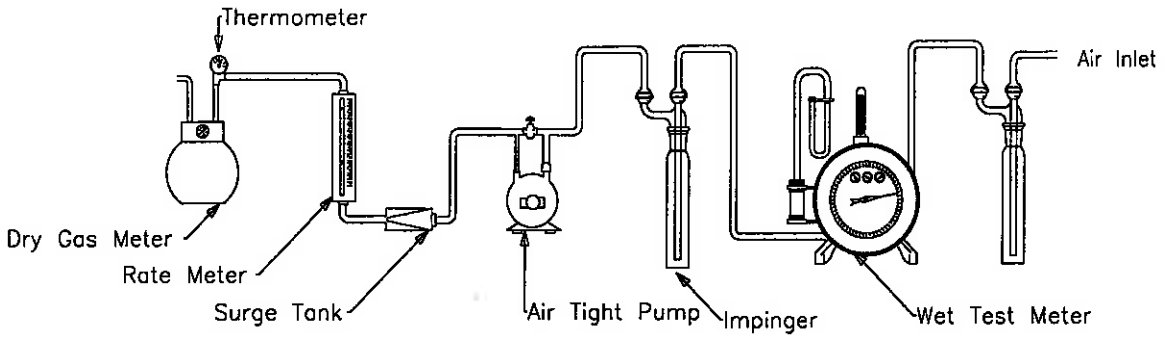

© Mostardi Platt

Dry Gas Meter No.	CM-1	Date:	
Standard Meter No.		Calibrated By:	
Standard Meter (Y)		Barometric Pressure:	

Run Number		Orifice Setting in H_2O Chg (H)	Standard Meter Gas Volume vr	Dry Gas Meter Gas Volume vd	Standard Meter Temp. F° tr	Dry Gas Meter Inlet Temp. F° tdi	Dry Gas Meter Outlet Temp. F° tdo	Dry Gas Meter Avg. Temp. F° td	Time Min	Time Sec	Y	Chg (H)
Final												
Initial												
Difference	1	0.20										
Final												
Initial												
Difference	2	0.50										
Final												
Initial												
Difference	3	0.70										
Final												
Initial												
Difference	4	0.90										
Final												
Initial												
Difference	5	1.20										
Final												
Initial												
Difference	6	2.00										

Average

© Mostardi Platt

Stack Temperature Sensor Calibration

Meter Box # : CM-1 *Name :* _____

Ambient Temperature : _____ *° F* *Date :* _____

Calibrator Model # : _____

Serial # : _____

Date Of Certification : _____

Primary Standards Directly Traceable National Institute of Standards and Technology (NIST)

Reference Source Temperature (° F)	***Test Thermometer Temperature (° F)***	***Temperature Difference %***
0		0.0
250		0.0
600		0.0
1200		0.0

$$\frac{(\text{Ref. Temp., °F} + 460) - (\text{Test Therm. Temp., °F} + 460)}{\text{Ref. Temp., °F} + 460} * 100 <= 1.5\,\%$$

© Mostardi Platt

Nozzle Calibration Sheet
Set #1

Nominal Diameter	0.128	0.138	0.154	0.170	0.186	0.200					Other
Nozzle Diameter	.128	0.138	.154	0.174	0.186	.200					
Nozzle Identification Number	1-1	1-2	1-3	1-4	1-5	1-6					

© Mostardi Platt

S TYPE PITOT TUBE INSPECTION FORM

Pitot Tube No: 1 Date: _____ Inspectors Name: _____

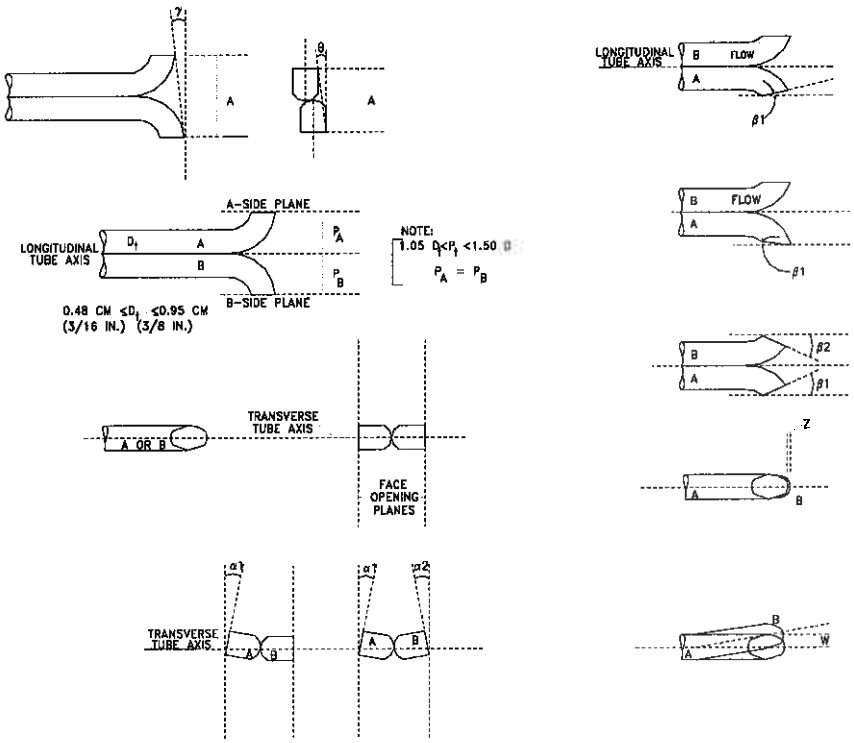

Pitot tube assembly level? x yes _____ no

Pitot tube openings damaged? _____ yes (explain below) x no

a_1 = 1 ° (<10°), a_2 = 1 ° (<10°) z = A sin g = 0.008 (in.); (<0.125 in.)

b_1 = 0 ° (<5°), b_2 = 2 ° (<5°) w = A sin q = 0.025 (in.); (<0.03125 in.)

γ = 0.5 °, θ = 1.5 °, A = 0.938 (in.) P_A = 0.477 (in.), P_B = 0.477 (in.), D_t = 0.375 (in.)

Calibration required? _____ yes x no

© Mostardi Platt

CALIBRATION SUMMARY

Project Number: _____ Date: _____
Client: _____ Operator: _____
Test Location: _____ Box Truck: _____

Analyzer Type, S/N, and Span	Cal Level	Cylinder ID Serial Number	Expected Cal Value	Actual Response	Difference As % of Span	Cylinder Pressure (psi)	Cylinder Expiration Date
CO_2	Zero						
	Mid						
	High						
O_2	Zero						
	Mid						
	High						

© Mostardi Platt

MERCURY SORBENT TRAP FIELD DATA SHEET

Project Name/Number: _____
Sampling Location: _____ Run Number: _____
Date: _____ Barometric Pressure: _____
Source Condition: _____ Test Engineer: _____
Dry Gas Meter No. _____ Y = _____ Trap Number _____

Sample Train A					
Clock Time 24 hour	Stack Temp. °F	Sorbent Trap Temp. °F	Meter Temp. (t_m) °F	Meter Volume (V_m) liters	Meter Vacuum, "Hg
Total/Average					

Dry Gas Meter No. _____ Y = _____ Trap Number _____ Spike Value _____ng

Sample Train B					
Clock Time 24 hour	Stack Temp. °F	Sorbent Trap Temp. °F	Meter Temp. (t_m) °F	Meter Volume (V_m) liters	Meter Vacuum, "Hg
Total/Average					

Train A: **Pre-Test Leak Check – Pass @ _____"Hg**
Post-Test Leak Check – Pass @_____"Hg
Train B: **Pre-Test Leak Check – Pass @ _____"Hg**
Post-Test Leak Check – Pass @_____"Hg

© Mostardi Platt

Method 25A Field Data Sheet

Project: _____ Operator: _____
Client: _____ Source: 1. _____
Location: _____ 2. _____
Date: _____ 3. _____

Parameters	Location 1	Location 2	Location 3
Test 1			
Time			
VOC ppmv as			
Air flow, scfm			
VOC lbs/hr as			
Removal Efficiency, %			
Test 2			
Time			
VOC ppmv as			
Air flow, scfm			
VOC lbs/hr as			
Removal Efficiency, %			
Test 3			
Time			
VOC ppmv as			
Air flow, scfm			
VOC lbs/hr as			
Removal Efficiency, %			

© Mostardi Platt

Visible Emissions Record Form

USEPA Method 9

Date ____/____/____
Site _____
_____

Compass Heading

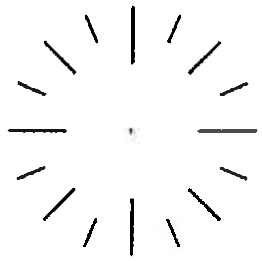

Emission Source

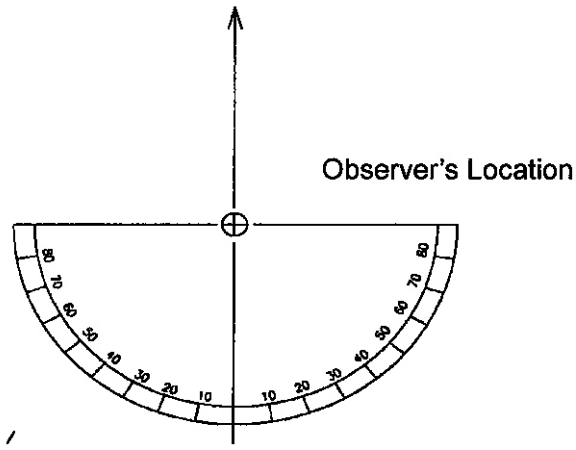

Observer: _____

Comments: _____
_____
_____
_____

Note:
1. Sun Position
2. Wind Direction
3. Wind Speed
4. Plume Type
5. Operating Level

EPA Reference Method 9

© Mostardi Platt

Visible Emissions Observation Record Form

Sheet: _____ of _____

Facility Location:

_____

_____

_____

_____

Date: _____

Observer: _____

Observation Start : _____

End: _____

Observation Point:

_____

_____

_____

_____

Distance from Source: _____ ft.

Source Height: _____ ft.

Emission Color _____

Background: _____

_____

Sky Condition: _____

_____

Sun Position: _____

Temperature: _____ °F

Wind Directior _____ at _____ mph

Reading Conditions _____

_____

Operating Conditior _____

_____

_____

Plume Description: _____

_____

Attached or Detached

Signature:

_____

Certification Date:

_____

><	0	15	30	45	Notes	><	0	15	30	45	Notes
0						30					
1						31					
2						32					
3						33					
4						34					
5						35					
6						36					
7						37					
8						38					
9						39					
10						40					
11						41					
12						42					
13						43					
14						44					
15						45					
16						46					
17						47					
18						48					
19						49					
20						50					
21						51					
22						52					
23						53					
24						54					
25						55					
26						56					
27						57					
28						58					
29						59					

Comments / Process Information:

Notes:

Notes:

© Mostardi Platt

Isokinetic Sampling Cover Sheet

Test Engineer: _____

Test Technician: _____

Plant Information

Run Number: _____ Date: _____ Project Number: _____

Test Location: _____ Client Name: _____ Plant Name: _____

Duct Shape: Circular or Rectangular Length: _____ Width: _____ or Diameter: _____

Flue Area: _____ Upstream Diameters: _____ Downstream Diameters: _____

Port Type: _____ Port Length: _____ Port Diameter: _____

Test Method: _____ Source Condition: _____

Meter and Probe Data

Meter ID: _____ Meter Y Value: _____ ΔH Value: _____

Pitot ID: _____ Pitot Coefficient: _____ Train Type: _____

Nozzle Kit ID _____ Nozzle Diameter: _____ Filter Number/Weight: _____

Probe Length: _____ Probe Liner: _____ Thimble Number/Weight: _____

Pre-Test Nozzle Leak Check: _____ @ _____ "Hg Post-Test Nozzle Leak Check: _____ @ _____ "Hg

Pre-Test Pitot Leak Check: _____ "H_2O Post-Test Pitot Leak Check: _____ "H_2O

Traverse Data

Ports Sampled: _____ Points/Port: _____ Min/Point: _____

Total Points: _____ Total Test Time: _____ Sample Plane: Horizontal or Vertical

Stack Parameters

Barometric Pressure: _____ Static Pressure: _____

CO_2 %: _____/_____/_____/ Avg._____ O_2 %: _____/_____/_____/Avg._____ Determined by: Method 3 or Method 3A

Imp and/or silica balance Model and S/N: _____ Servomex Serial #: _____

Initial Imp. Volume or Weight: _____ Final Imp. Volume or Weight: _____ Imp. Volume or Weight Gain: _____

Initial Silica Weight: _____ Final Silica Weight: _____ Silica Weight Gain: _____

Comments:

Post-Test Nozzle Verification:

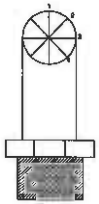

1)_____ 2)_____ 3)_____ 4)_____

© Mostardi Platt

Isokinetic Sampling Field Data Sheet

Project Number: _____ Date: _____ Test Number: _____

Client: _____ Test Location: _____ Operator: _____ Test Tech: _____

Plant: _____ Test Method: _____ Page Number: _____ of _____

Port-Point #.	Time	(ΔP)	Orifice Setting (ΔH)	Meter Volume (V_m) ft^3, Actual	Square Root, ΔP	Meter Rate, Cubic Feet/ Min.	Theoretical Meter Volume, (V_m) ft^3, per point	Theoretical Meter Volume, (V_m) ft^3, total	Stack Temp, °F	Meter Temp Inlet, °F	Meter Temp Outlet, °F	Pump Vacuum, " Hg	Probe Temp. °F	Filter Temp. °F	CPM Filter Temp. °F	Impinger Outlet Well Temp °F

© Mostardi Platt

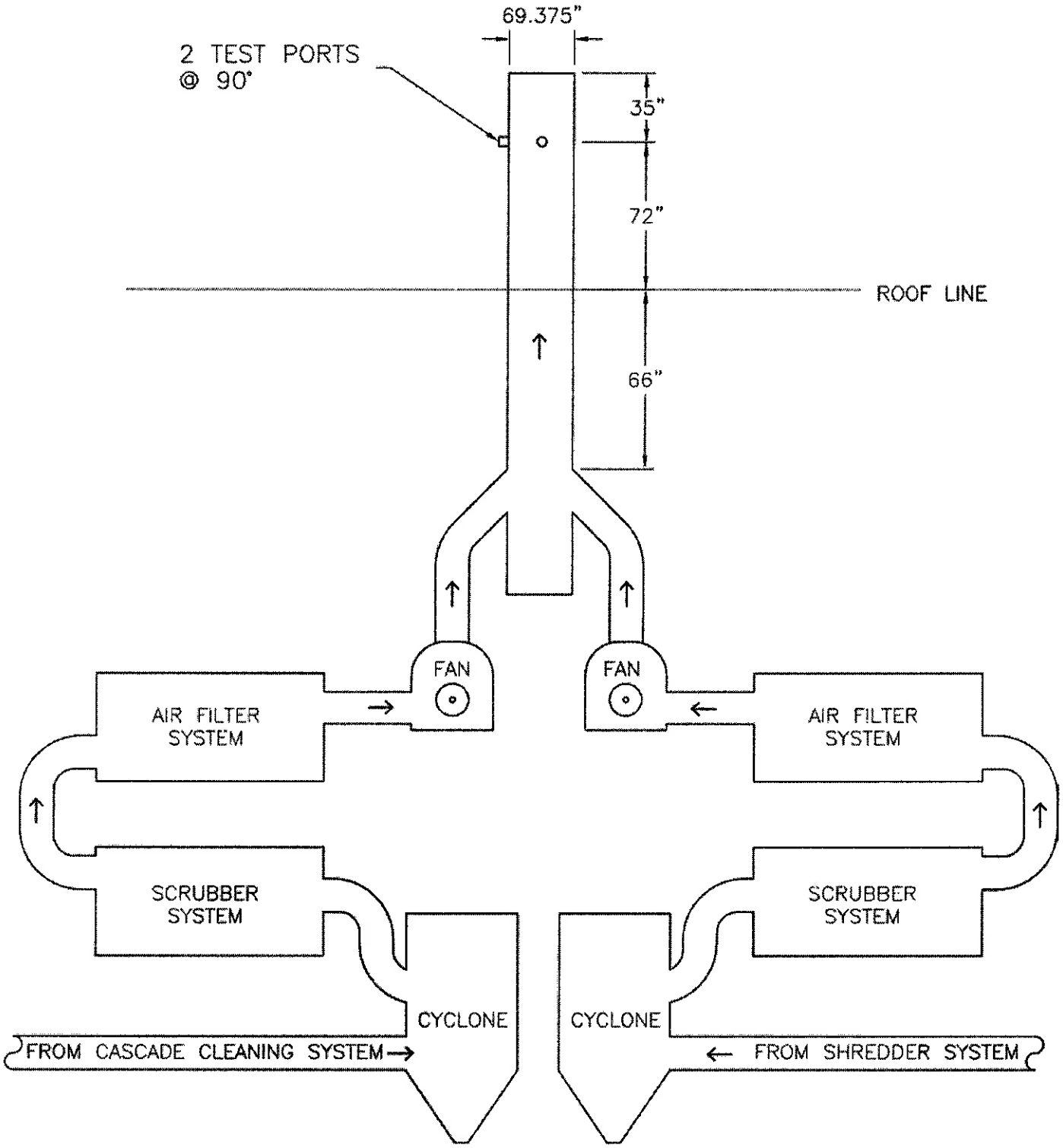

TEST PORT LOCATIONS
NORTHERN METAL RECYCLING
MINNEAPOLIS, MINNESOTA
SHREDDER/CASCADE CLEANING SYSTEM
COMMON STACK (SV001, EU001, EU002)

FIGURE 1

© Mostardi Platt

END OF THE REPORT

© Mostardi Platt