APPENDIX A - LEAK DETECTION AND REPAIR (LDAR) INSPECTION REPORTS

Inspection Date: January 26-27, 2021

New Indy Containerboard - Catawba Mill
5300 Cureton Ferry Rd.
Catawba, SC 29704

2021 Monthly LDAR Inspection Summary Report

Table 1: Visual Inspection Summary Table

Equipment Number	Date	Description of Leak or Visual Defect
MV-1137	1/26/2021	Manual Valve MV-1137 is located on foul condensate line at outlet of HVLC Foul Condensate Tank No. 3 and prior to the pump. The drain valve is open and dripping from spout.
NA	1/27/2021	The 1A Screw Press Dilution Conveyor is puffing from top hatch door.
NA	1/27/2021	The 1B Screw Press Dilution Conveyor is puffing from top hatch door.
NA	1/27/2021	The 1A Brown Stock Washer is puffing from three open hatch doors.
NA	1/27/2021	The 1B Brown Stock Washer is puffing from four open hatch doors.
NA	1/27/2021	The 2A Brown Stock Washer is puffing from four open hatch doors.
NA	1/27/2021	The 2B Brown Stock Washer is puffing from four open hatch doors.
NA	1/27/2021	The 3A Brown Stock Washer is puffing from one open hatch door.
NA	1/27/2021	The 3B Brown Stock Washer is puffing from four open hatch doors

First Attempt to Repair must be completed by:	5 Days from Inspection Date	Not Applicable if no leaks were found.
Repairs must be completed by:	15 Days from Inspection Date	Not Applicable if no leaks were found.

This report provides a summary of leaks and visual defects found during the visual inspection of the closed-vent and condensate-collection systems and complies with the record keeping requirements of 63.454(b)(1-2, 4-5).

The facility must initiate repairs to any defects within five (5) calendar days from this inspection and the defects must be repaired within fifteen (15) calendar days of the inspection. If the leak or defect requires the system to be shutdown in order to make repairs, or more emissions would occur from attempting the repair than delaying the repair, then the repairs may be delayed until the next process unit shutdown. A report must be supplied with the repair date and associated information, or the reason for the delay if the repairs are not completed within the 15-day period. These response requirements are specific to 40 CFR 63, specifically 63.453(k)(6), 63.453(l)(3), and 63.964(b)(1-2). Documentation of all repair attempts made and any leaks/defects requiring a process unit shutdown must be completed according to 63.454(b)(6-11).

I certify that the results of the visual inspection are accurate and complete to the best of my knowledge.

Inspector Name: Josh Howard

Signature: Josh Howard

ENVIRONMENTAL360

Inspection QA/QC Procedure

E360 Project Number?	New Indy Catawba
Task Number (if applicable)?	January 2021 Monthly LDAR

Purpose of Form

To verify field work meets each critical element.

Visual Work Flow (WF)

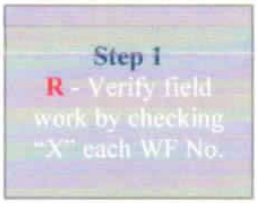

Verification of Critical Elements

WF No.	Requirement	Yes?
	Work-flow step	1
	Verifier of critical elements for work-flow step	R
1	Was a bump test performed on the personal H_2S monitor?	✓
2	Have the most recent versions of the inspection forms been used?	✓
3	Were all inspection points identified correctly and inspected correctly?	✓
4	Did the operator/ contact verify to our inspector that all equipment was operating under normal operating conditions?	✓
5	Were any deficiencies identified in person to the client?	✓
6	Were all inspection questions answered with either a Yes, No, or NA?	NA
7	Were inspections performed during the required regulatory time frame?	✓

Approvals

Role	WF Step	Name	Approval (insert date)
Responsible Person (R)	1	Josh Howard	1/27/21

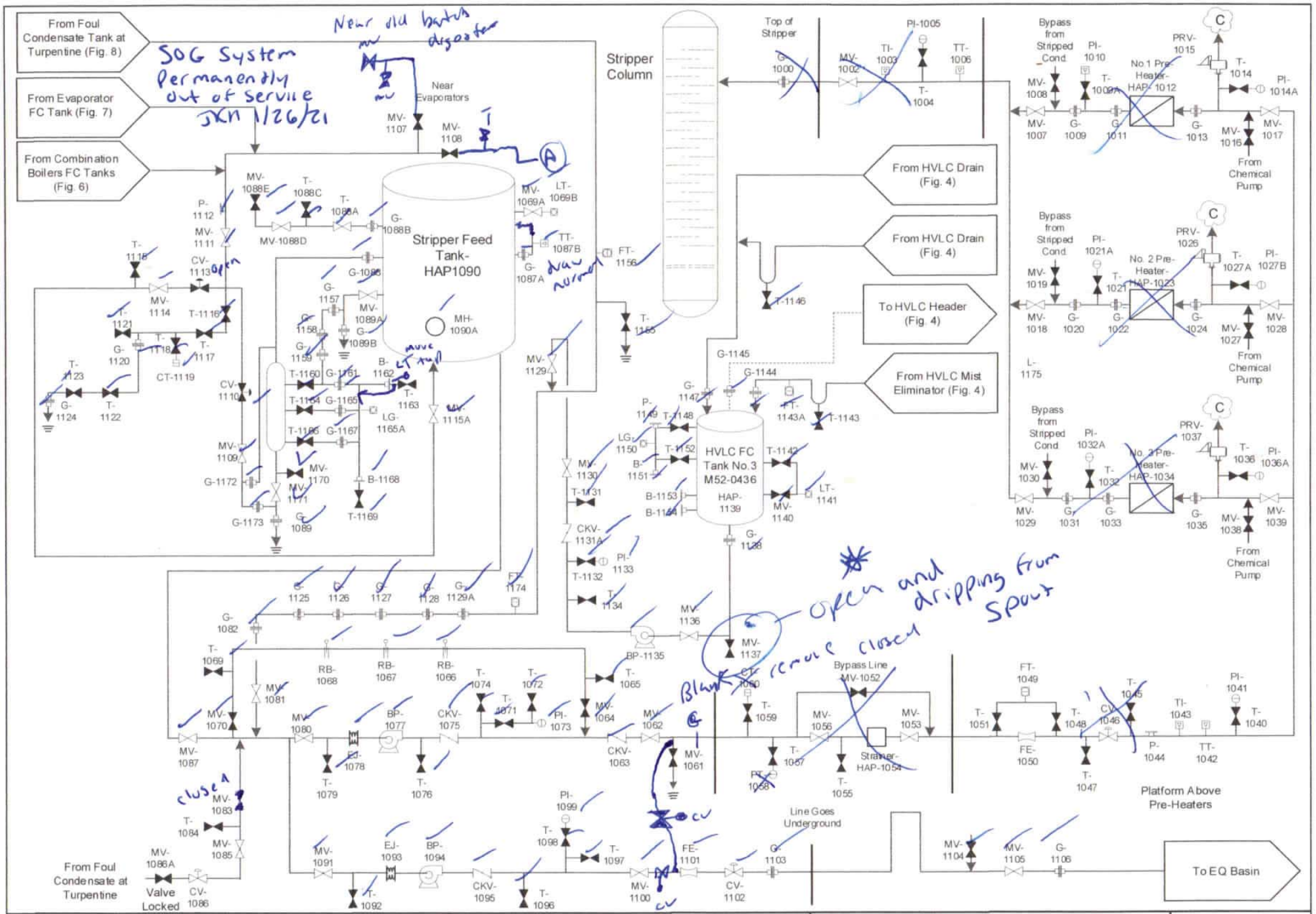

Vent Gases	To Another Page and Indicated Equipment	
Condensates		
Liquor/Stock Lines	From Another Page and Indicated Equipment	
Process Lines		

ENVIRONMENTAL 360

New-Indy – Catawba Mill

LDAR Inspection and Testing Diagrams

Stripper System Foul Condensate

Rev. Date July 2020

Figure 1

Stripper System Foul Condensate
Completed Date/Time: 1/26/21

Number	Type	Equip. Number	Pressure (+/-)	Background	VOC Reading	Is Component Free of Leaks or Defects?	Comments
1000	G					Remove	
1002	MV	51-MV-0580					
1003	TI	TI-032B					
1004	T						
1005	PI	PI-031B					
1006	TT						
1007	MV	51-MV-0550					
1008	MV	51-MV-0541					
1009	G						
1009A	T						
1010	PI						
1011	G						
1012	HAP						
1013	G						
1014	T						
1014A	PI						
1015	PRV	PSV-034A					
1016	MV	51-MV-0554					
1017	MV	51-MV-0563					
1018	MV	51-MV-0567					
1019	MV	51-MV-0549					
1020	G						
1021	T						
1021A	PI						
1022	G						
1023	HAP						
1024	G						
1026	PRV	PSV-034C					
1027	MV	51-MV-0555					
1027A	T						
1027B	PI						
1028	MV	51-MV-0564					
1029	MV						
1030	MV	51-MV-0548					
1031	G						
1032	T						
1032A	PI						
1033	G						
1034	HAP						
1035	G						
1036	T						
1036A	PI						
1037	PRV	PSV-034E					
1038	MV	51-MV-0556					
1039	MV	51-MV-0565					
1040	T						
1041	PI	PI-031D					
1042	TT						
1043	TI						
1044	P						
1045	T						
1046	CV	51-FCV-001					
1047	T	51-MV-0562					
1048	T						
1049	FT	51-FT-001					
1050	FE						
1051	T						
1052	MV	51-MV-0560					
1053	MV	51-MV-0561					
1054	HAP						
1055	T	51-MV-0578					
1056	MV	51-MV-0559					
1057	T						
1058	PT	51-AT-007					
1059	T						
1060	CT						
1061	MV	24-MV-0361					
1062	MV	24-MV-0359					
1063	CKV						
1064	MV	24-MV-0445					
1065	T						
1066	RB						
1067	RB						
1068	RB						
1069	T						
1069A	MV						
1069B	LT	51-LT-265					
1070	MV	24-MV-445					
1071	T						
1072	T						
1073	PI						
1074	T						
1075	CKV						
1076	T						
1077	BP						
1078	EJ						
1079	T						
1080	MV	24-MV-363					
1081	MV						
1082	G						
1083	MV	V704F					
1084	T						Remove
1085	MV						
1086	CV	51-HV-269					
1086A	MV						
1087	MV	24-MV-362					
1087A	G						
1087B	TT	51-TT-266					
1088	G						
1088A	T						
1088B	G						
1088C	T						
1088D	MV						
1088E	MV						
1089	G						
1089A	MV	24-MV-0352					
1089B	G						
1090	HAP						
1090A	MH						
1091	MV	24-MV-0365					
1092	T						
1093	EJ						
1094	BP						
1095	CKV	V884F					
1096	T						
1097	T						
1098	T						
1099	PI						
1100	MV	24-MV-360					
1101	FE						
1102	CV	51-FCV-267					
1103	G						
1104	MV						
1105	MV						
1106	G						
1107	MV						
1108	MV						
1109	MV						
1110	CV						
1111	MV						
1112	P						
1113	CV						
1114	MV						
1115	T						
1115A	MV						
1116	T						
1117	T						
1118	T						
1119	CT						
1120	G						
1121	T						
1122	T						
1123	T						
1124	G						
1125	G						
1126	G						
1127	G						
1128	G						
1129	MV						
1129A	G						
1130	MV						
1131	T						
1131A	CKV						
1132	T						
1133	PI						
1134	T						
1135	BP						
1136	MV						
1137	MV						
1138	G						
1139	HAP	M52-0436					
1140	MV						
1141	LT						
1142	T						
1143	T						
1143A	FT						
1144	G						
1145	G						
1146	T						
1147	G						
1148	T						
1149	P						
1150	LG						
1151	B						
1152	T						
1153	B						
1154	B						
1155	T						
1156	FT						
1157	G						
1158	G						
1159	G						
1160	T						
1161	G						
1162	B						
1163	T						
1164	T						
1165	G						
1165A	LG						
1166	T						
1167	G						
1168	B						
1169	T						
1170	MV						
1171	MV						
1172	G						
1173	G						
1174	FT						
1175	L						

Stripper Feed Tank

Completed Date/Time: 1/26/21

Number	Type	Equip. Number	Pressure (+/-)	Background	VOC Reading	Is Component Free of Leaks or Defects?	Comments
2001	G					1/25	
2002	T					Y	
2003	MV					Y	
2004	T					Y	
2005	CV	51-PCV-264				Y	
2006	CV	51-HV-262				Y	
2007	MV	51-MV-0672				Y	
2008	T					Y	
2009	T					Y	
2010	T					Y	
2011	PT	51-PSH-261				Y	
2011A	PT					Y	
2012	RD					Y	
2013	CV	51-HV-260				Y	
2014	T	51-MV-0675				Y	
2015	T					Y	
2016	T					Y	
2017	PI					Y	
2018	P					Y	
2019	FA	M51-0546				Y	
2020	P					Y	
2021	T					Y	
2022	T					Y	
2023	PI	51-PI-268B				Y	
2024	TI	01-TI-274				Y	
2025	MV	51-MV-0673				Y	
2026	T	24-MV-0353				Y	
2027	L					Y	

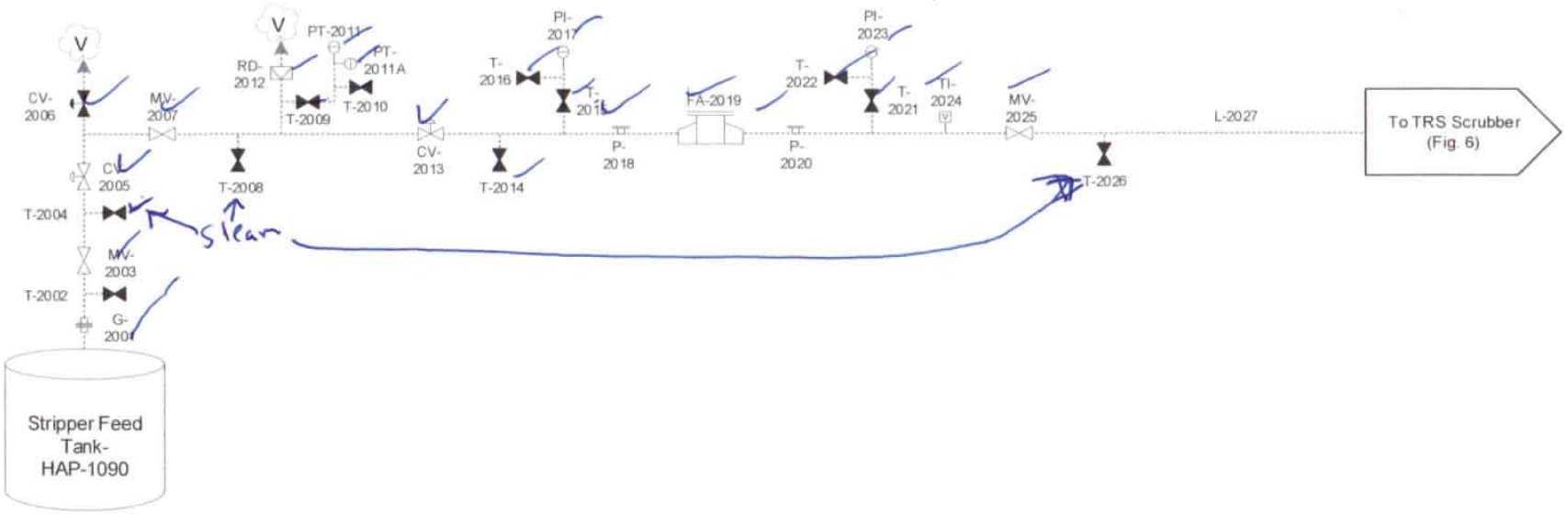

* Indicates car seal present

Vent Gases Condensates Liquor/Stock Lines Process Lines	To Another Page and Indicated Equipment From Another Page and Indicated Equipment	ENVIRONMENTAL 360	New-Indy – Catawba Mill LDAR Inspection and Testing Diagrams Stripper Feed Tank	Rev. Date July 2020 Figure 2

Stripper Column SOGs

Completed Date/Time: 1/26/21

Number	Type	Equip. Number	Pressure (+/-)	Background	VOC Reading	Is Component Free of Leaks or Defects?	Comments
3000	G					Remove	
3001	MV						
3002	G						
3003	T						
3004	PT	51-PT-015					
3005	P						
3006	TT						
3007	P						
3008	TI	TI-032F					
3009	T						
3010	P						
3011	G						
3012	G						
3013	MV						
3014	G						
3015	T						
3016	FT	51-FT-023					
3017	T						
3018	FE						
3019	EJ						
3020	G						
3021	T						
3022	PI						
3023	TI						
3024	TT	51-TT-027					
3025	T						Car seal present.
3026	B						
3027	MV	51-MV-0600					
3028	B						
3029	TI	TI-032M					
3030	T						Car seal present.
3031	TT	51-TT-028				Remove	
3032	B						
3033	PT						
3034	T						
3035	PI						
3036	CV	51-PCV-030					
3037	MV	51-MV-0602					
3038	MV	51-MV-0633					Car seal present.
3039	MV	51-MV-0632					
3040	T						
3040A	T						
3041	PT	51-PSH-036					
3041A	PT						
3042	G						
3043	RD						
3044	T						
3045	T						Car seal present.
3046	PI						
3047	FA						
3048	T						
3049	T						Car seal present.
3050	PI						
3051	T						
3051A	T						
3051A	T						
3052	PT	51-PT-038					
3053	TI						
3054	MV	51-MV-0634					
3055	G						
3056	T						
3057	FT	51-FT-040					
3058	T						
3059	G						
3060	L						

SOG system is out of service remove JKM 1/26/21

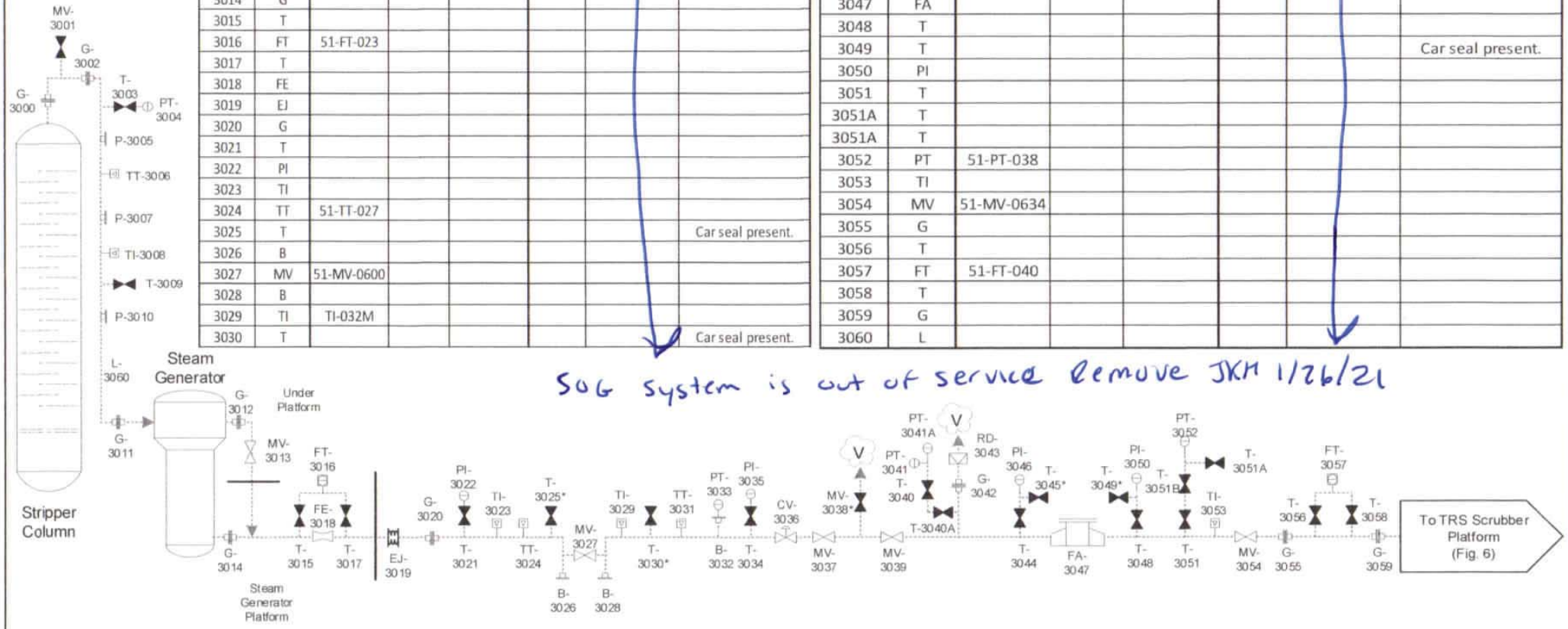

* Indicates car seal present

Vent Gases	To Another Page and Indicated Equipment	ENVIRONMENTAL 360	New-Indy – Catawba Mill
Condensates	From Another Page and Indicated Equipment		LDAR Inspection and Testing Diagrams Stripper Column SOGs
Liquor/Stock Lines			Rev. Date July 2020
Process Lines			Figure 3

Combination Boiler HVLC Incinerator
Completed Date/Time: 1/26/21

Number	Type	Equip. Number	Pressure (+/-)	Background	VOC Reading	Is Component Free of Leaks or Defects?	Comments
4000	EJ					yes	
4001	MV	37-MV-0271				y	
4002	P					y	
4003	T					y	
4004	PI					y	
4005	FA					y	
4006	T					y	
4007	PI					y	
4008	G					y	
4009	TT					y	
4009A	P					y	
4010	EJ					y	
4011	MV	37-MV-0270				y	
4012	T					y	
4013	PI					y	
4014	FA					y	
4015	T					y	
4016	PI					y	
4017	EJ					y	
4018	TT					y	
4019	MV	26-MV-0628				y	
4020	T	BOP271				y	
4021	PI					y	
4022	FA	M52-0426				y	
4023	T	BOP270				y	
4024	PI	52-PI-930				yes	
4025	EJ					y	
4026	MV					y	
4027	P					y	
4028	T					y	
4029	PI					y	
4030	FA					y	
4031	T					y	
4032	PI					y	
4033	CV					y	
4034	MV	26-MV-0626				y	
4035	T					y	
4036	PT	52-PSH-960				y	
4037	MV	52-MV-0625				y	
4038	RD					y	
4039	MV					y	
4040	CV					y	
4041	CV					y	
4042	G					y	
4043	TT	52-TT-965				y	
4044	P					y	
4044A	P					y	
4045	G					y	
4046	G					y	
4047	P					y	
4048	ME					y	
4048A	G					y	
4049	P					y	
4050	G					y	
4051	L					y	

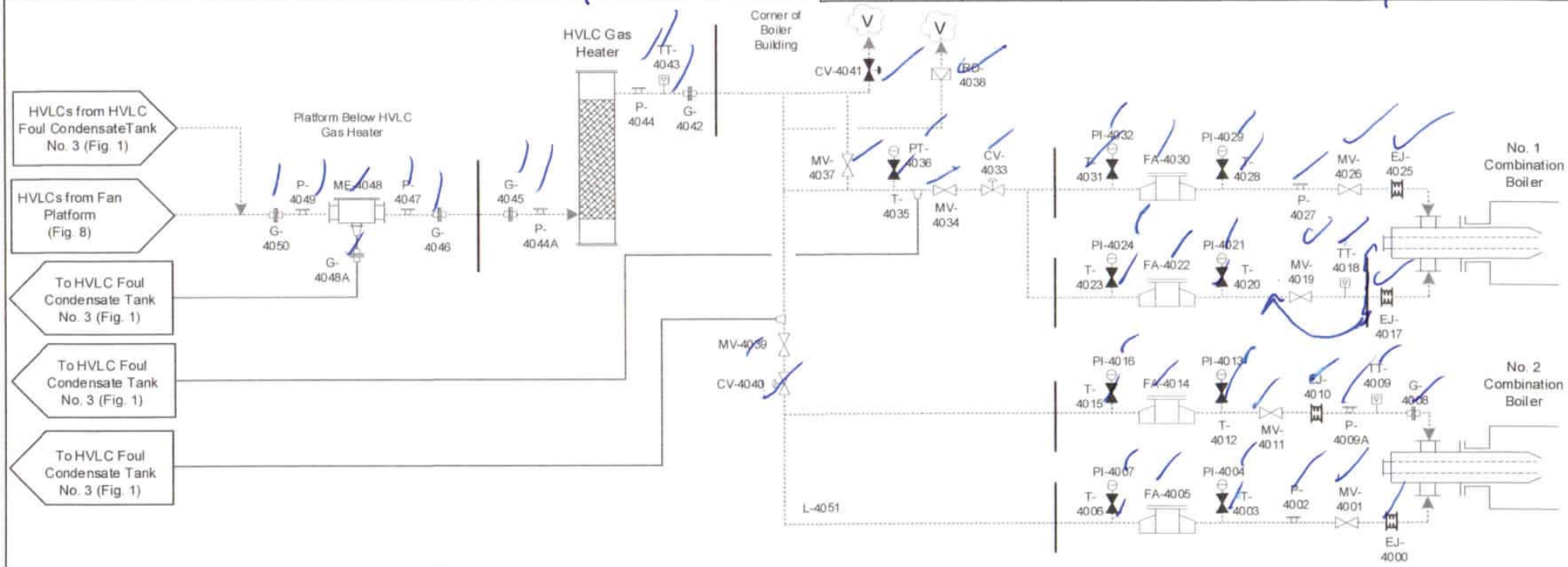

Vent Gases
Condensates
Liquor/Stock Lines
Process Lines

To Another Page and Indicated Equipment
From Another Page and Indicated Equipment

ENVIRONMENTAL 360

New-Indy – Catawba Mill

LDAR Inspection and Testing Diagrams

Combination Boiler HVLC Incineration

Rev. Date July 2020

Figure 4

Combination Boiler SOG and LVHC Incineration

Completed Date/Time: 1/26/21

Number	Type	Equip. Number	Pressure (+/-)	Background	VOC Reading	Is Component Free of Leaks or Defects?	Comments
5000	G					Remove	
5001	EJ						
5002	MV	37-MV-0283					
5003	TI						
5004	TT						
5005	T						
5006	PT	37-PT-032					
5007	T						
5008	PI						
5009	FA						
5010	T						
5011	PT						
5012	T						
5013	PI						
5014	G					Yes	
5015	EJ					Y	
5016	MV	37-MV-0313				Y	
5017	T					Y	
5018	PT	37-PT-385				Y	
5019	TT	37-TT-384				Y	
5020	P					Y	
5021	FA					Y	
5022	P					Y	
5023	T					Y	
5024	PT	37-PT-383				Y	
5025	G						Remove
5026	EJ						
5027	MV						
5028	TI						
5029	TT	26-TT-034					
5030	T						
5031	PT	26-PT-033					
5034	FA						
5035	T						
5036	PT	26-PT-031					
5037	T						
5038	PI						
5039	G					Yes	
5040	EJ					Y	
5041	MV	26-MV-0532				Y	
5042	T					Y	
5043	PT	26-PT-377				Y	
5044	TT					Y	
5045	P					Y	
5046	FA					Y	
5047	P					Y	
5048	T					Y	
5049	PT	26-PT-375				Y	
5050	L					Y	

SOG System Permanently Out of Service
~~Sto~~ JKM 1/26/21

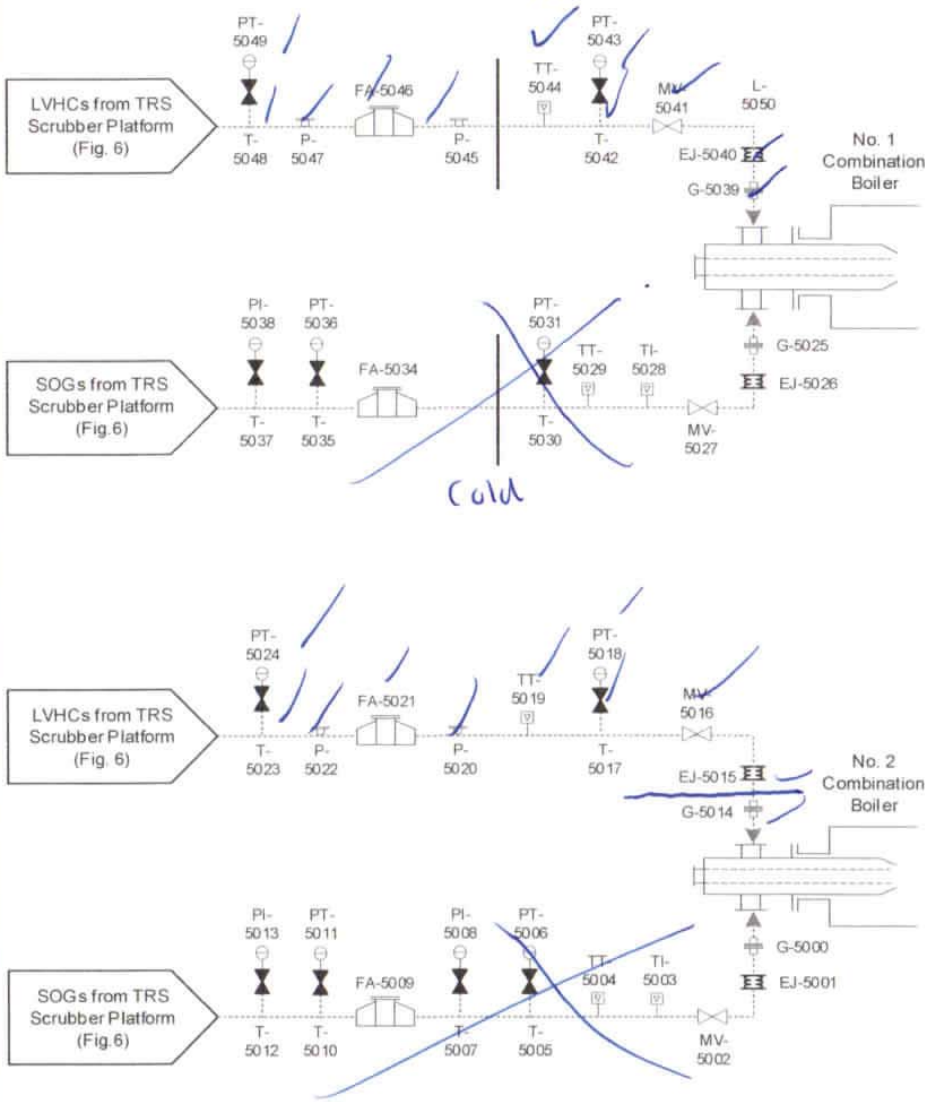

Vent Gases
Condensates
Liquor/Stock Lines
Process Lines

To Another Page and Indicated Equipment

From Another Page and Indicated Equipment

ENVIRONMENTAL 360

New-Indy – Catawba Mill

LDAR Inspection and Testing Diagrams

Combination Boiler SOG and LVHC Incineration

Rev. Date July 2020

Figure 5

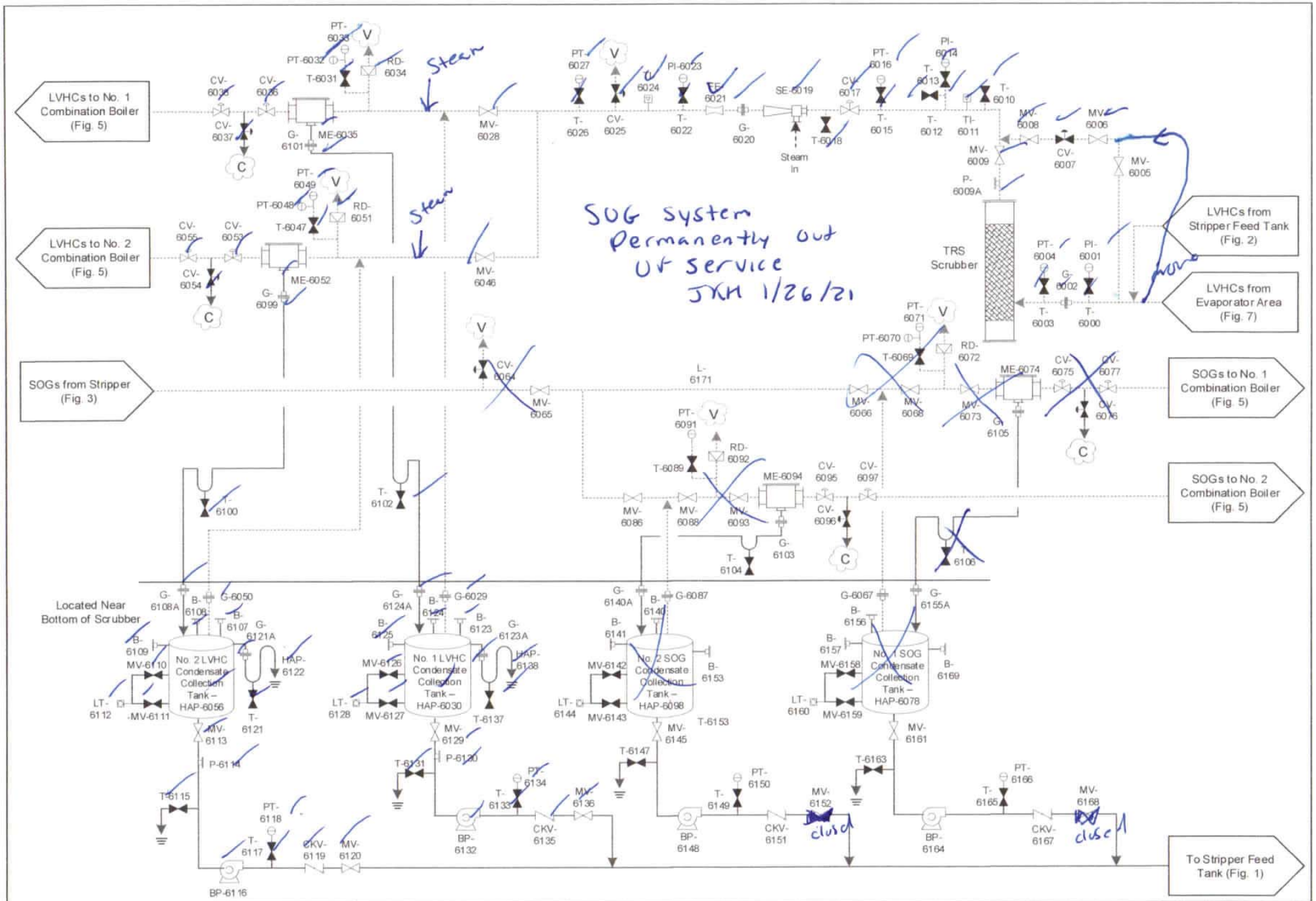

Vent Gases Condensates Liquor/Stock Lines Process Lines	To Another Page and Indicated Equipment From Another Page and Indicated Equipment	ENVIRONMENTAL 360	New-Indy – Catawba Mill LDAR Inspection and Testing Diagrams TRS Scrubber Platform
			Rev. Date July 2020 Figure 6

TRS Scrubber Platform
Completed Date/Time: 1/26/21

Number	Type	Equip. Number	Pressure (+/-)	Background	VOC Reading	Is Component Free of Leaks or Defects?	Comments
6000	T					Y es	
6001	PI					Y	
6002	G					Y	
6003	T					Y	
6004	PT					Y	
6005	MV	26-MV-0485				Y	
6006	MV	26-MV-0486				Y	
6007	CV	26-HV-364				Y	
6008	MV	26-MV-0575				Y	
6009	MV	26-MV-0507				Y	
6009A	P					Y	
6010	T					Y	
6011	TI					Y	
6012	T					Y	
6013	T					Y	
6014	PI					Y	
6015	T					Y	
6016	PT					Y	
6017	CV	26-PCV-365				Y	
6018	T					Y	
6019	SE					Y	
6020	G					Y	
6021	FE					Y	
6022	T					Y	
6023	PI					Y	
6024	TI					Y	
6025	CV					Y	
6026	T					Y	
6027	PT	26-PT-372				Y	
6028	MV					Y	
6029	G					Y	
6030	HAP					Y	
6031	T					Y	
6032	PT					Y	
6033	PT	26-PSH-373				Y	
6034	RD					Y	
6035	ME					Y	
6036	CV					Y	
6037	CV					Y	
6038	CV					Y	
6046	MV					Y	
6047	T					Y	
6048	PT	37-PSH-381				Y	
6049	PT					Y	
6050	G					Y	
6051	RD					Y	
6052	ME					Y	
6053	CV	37-HV-382A				Y	
6054	CV	37-HV-043				Y	
6055	CV	37-HV-382B				Y	
6056	HAP					Y	
6064	CV						Remove
6065	MV	51-MV-637					
6066	MV	51-MV-638					
6067	G						
6068	MV	51-MV-474					
6069	T						
6070	PT	26-PSH-028					
6071	PT						
6072	RD						
6073	MV	26-MV-0475					
6074	ME						
6075	CV	26-HV-030A					
6076	CV	26-HV-043					
6077	CV	26-HV-030B					
6078	HAP						
6086	MV	51-MV-0283					
6087	G						
6088	MV						
6089	T						
6091	PT	37-PSH-025					
6092	RD						
6093	MV	37-MV-0282					
6094	ME						
6095	CV	37-HV-027A					Remove
6096	CV						
6097	CV						
6098	HAP						
6099	G						
6100	T						
6101	G						
6102	T						
6103	G						Remove
6104	T						Remove
6105	G						Remove
6106	T						Remove
6107	B						
6108	B						
6108A	G						
6109	B						
6110	MV						
6111	MV						
6112	LT						
6113	MV						
6114	P						
6115	T						
6116	BP						
6117	T						
6118	PT						
6119	CKV						
6120	MV						
6121	T						
6121A	G						
6122	HAP						
6123	B						
6123A	G						
6124	B						
6124A	G						
6125	B						
6126	MV						
6127	MV						
6128	LT						
6129	MV						
6130	P						
6131	T						
6132	BP						
6133	T						
6134	PT						
6135	CKV						
6136	MV						
6137	T						
6138	HAP						
6140	B						Remove
6140A	G						
6141	B						
6142	MV						
6143	MV						
6144	LT						
6145	MV						
6147	T						
6148	BP						
6149	T						
6150	PT						
6151	CKV						
6152	MV						Yes Remove
6153	B						
6155A	G						
6156	B						
6157	B						
6158	MV						
6159	MV						
6160	LT						
6161	MV						
6163	T						
6164	BP						
6165	T						
6166	PT						
6167	CKV						
6168	MV						Yes Remove
6169	B						
6171	L						

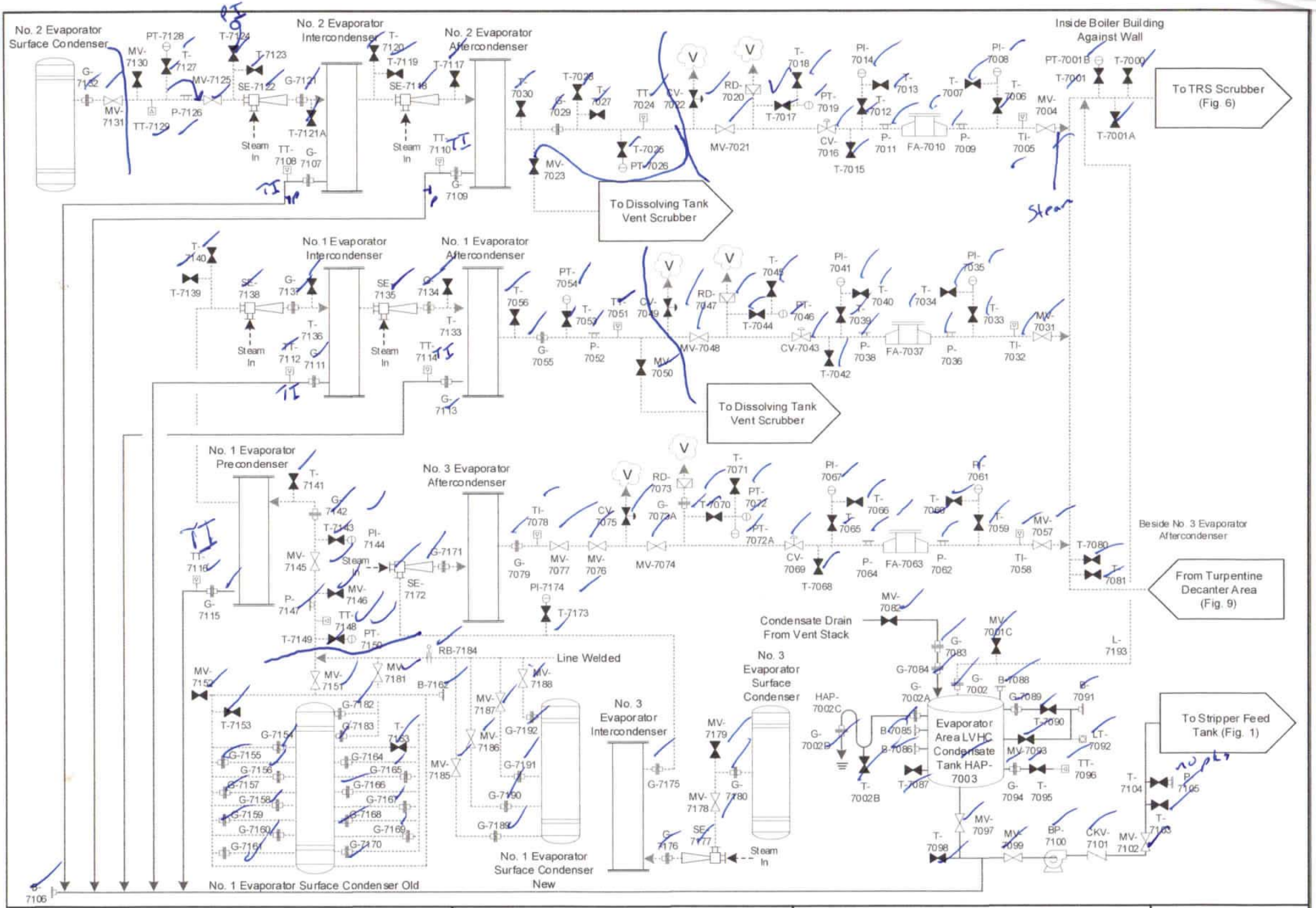

Vent Gases Condensates Liquor/Stock Lines Process Lines	To Another Page and Indicated Equipment From Another Page and Indicated Equipment	ENVIRONMENTAL 360	New-Indy – Catawba Mill LDAR Inspection and Testing Diagrams Evaporator System	Rev. Date July 2020 Figure 7

Evaporator System
Completed Date/Time: 1/26/21

Number	Type	Equip. Number	Pressure (+/-)	Background	VOC Reading	Is Component Free of Leaks or Defects?	Comments
7000	T					Yes	
7001	T					Y	
7001A	T					Y	
7001B	PT					Y	
7001C	MV					Y	
7002	G					Y	
7002A	G					Y	
7002B	T					Y	
7002C	HAP					Y	
7002D	G					Y	
7003	HAP					Y	
7004	MV					Y	
7005	TI					Y	
7006	T					Y	
7007	T					Y	
7008	PI					Y	
7009	P					Y	
7010	FA					Y	
7011	P					Y	
7012	T					Y	
7013	T					Y	
7014	PI					Y	
7015	T	24-MV-0380				Y	
7016	CV	24-HV-334				Y	
7017	T					Y	
7018	T					Y	
7019	PT					Y	
7020	RD					Y	
7021	MV	24-MV-0378				Y	
7022	CV	24-HV-336				Y	
7023	MV					Y	
7024	TT	24-TE-358				Y	
7025	T					Y	
7026	PT	24-PT-357				Y	
7027	T					Y	
7028	T					Y	
7029	G					Y	
7030	T					Y	
7031	MV	24-MV-0389				Y	
7032	TI					Y	
7033	T					Y	
7034	T					Y	
7035	PI					Y	
7036	P					Y	
7037	FA					Y	
7038	P					Y	
7039	T					Y	
7040	T					Y	
7041	PI					Y	
7042	T	24-MV-0388				Y	
7043	CV	24-HV-329				Y	
7044	T					Y	
7045	T					Y	
7046	PT					Y	
7047	RD					Y	
7048	MV	24-MV-0387				Y	
7049	CV	24-HV-331				Y	
7050	MV					Y	
7051	TT	24-TT-364				Y	
7052	P					Y	
7053	T					Y	
7054	PT	24-PT-363				Y	
7055	G					Y	
7056	T					Y	
7057	MV	51-MV-0660				Y	
7058	TI					Y	
7059	T					Y	
7060	T					Y	
7061	PI					Y	
7062	P					Y	
7063	FA					Y	
7064	P					Y	
7065	T					Y	
7066	T					Y	
7067	PI					Y	
7068	T	51-MV-0659				Y	
7069	CV	24-HV-339				Y	
7070	T					Y	
7071	T					Y	
7072	PT					Y	
7072A	PT					Y	
7073	RD					Y	
7073A	G					Y	
7074	MV	51-MV-0658				Y	
7075	CV	24-HV-341				Y	
7076	MV	51-MV-0657				Y	
7077	MV	51-MV-769				Y	
7078	TI					Y	
7079	G					Y	
7080	T					Y	
7081	T					Y	
7082	MV					Y	
7083	G					Y	
7084	G					Y	
7085	B					Y	
7086	B					Y	
7087	T					Y	
7088	B					Y	
7089	G					Y	
7090	T					Y	
7091	B					Yes	
7092	LT					Y	
7093	MV					Y	
7094	G					Y	
7095	T					Y	
7096	TT					Y	
7097	MV					Y	
7098	T					Y	
7099	MV					Y	
7100	BP					Y	
7101	CKV					Y	
7102	MV					Y	
7103	T					Y	
7104	T					Y	
7106	B					Y	
7107	G					Y	
7108	TT					Y	
7109	G					Y	
7110	TT					Y	
7111	G					Y	
7112	TT					Y	
7113	G					Y	
7114	TT					Y	
7115	G					Y	
7116	TT					Y	
7117	T					Y	
7118	SE					Y	
7119	T					Y	
7120	T					Y	
7121	G					Y	
7121A	T					Y	
7122	SE					Y	
7123	T					Y	
7124	T					Y	
7125	MV					Y	
7126	P					Y	
7127	T					Y	
7128	PT					Y	
7129	TT					Y	
7130	MV					Y	
7131	MV					Y	
7132	G					Y	
7133	T					Y	
7134	G					Y	
7135	SE					Y	
7136	T					Y	
7137	G					Y	
7138	SE					Y	
7139	T					Y	
7140	T					Y	
7141	T					Y	
7142	G					Y	
7143	T					Y	
7144	PI					Y	
7145	MV					Y	
7146	MV					Y	
7147	P					Y	
7148	TT					Y	
7149	T					Y	
7150	PT					Y	
7151	MV					Y	
7152	MV	24-MV-0399				Y	
7153	T					Y	
7154	G					Y	
7155	G					Y	
7156	G					Y	
7157	G					Y	
7158	G					Y	
7159	G					Y	
7160	G					Y	
7161	G					Y	
7162	B					Y	
7163	T					Y	
7164	G					Y	
7165	G					Y	
7166	G					Y	
7167	G					Y	
7168	G					Y	
7169	G					Y	
7170	G					Y	
7171	G					Y	
7172	SE					Y	
7173	T	51-MV-0774				Y	
7174	PI					Y	
7175	G					Y	
7176	G					Y	
7177	SE					Y	
7178	MV	51-MV-0783				Y	
7179	MV	51-MV-0782				Y	
7180	G					Y	
7181	MV					Y	
7182	G					Y	
7183	G					Y	
7184	RB					Y	
7185	MV					Y	
7186	MV					Y	
7187	MV					Y	
7188	MV					Y	
7189	G					Y	
7190	G					Y	
7191	G					Y	
7192	G					Y	
7193	L					Y	

HVLC Blower Platform
Completed Date/Time: 1/26/21

Number	Type	Equip. Number	Pressure (+/-)	Background	VOC Reading	Is Component Free of Leaks or Defects?	Comments
8000	B					Y	
8001	T					Y	
8002	MV					Y	
8003	P					Y	
8004	G					Y	
8005	T					Y	
8006	MV					Y	
8007	T					Y	
8008	G					Y	
8009	T					Y	
8010	PI					Y	
8011	TI					Y	
8012	T					Y	
8013	TT					Y	
8014	CV	54-PV-953				Y	
8015	MV	26-MV-0618				Y	
8016	CV					Y	
8017	T	26-MV-0619				Y	
8018	G					Y	
8019	P					Y	
8020	ME					Y	
8021	T					Y	
8022	G					Y	
8023	G					Y	
8024	BP	M52-0412				Y	
8025	G					Y	
8026	T					Y	
8027	PI	52-PI-958				Y	
8028	TI					Y	
8029	MV	26-MV-0670				Y	
8030	MV					Y	Car seal present.
8031	MV					Y	
8032	G					Y	
8033	BP	M52				Y	
8034	G					Y	
8035	MV	26-MV-0622				Y	
8036	T					Y	
8037	T					Y	
8038	FT					Y	
8039	FE					Y	
8040	T					Y	
8041	T					Y	
8042	MV					Y	
8043	FT					Y	
8044	FT					Y	
8045	FT					Y	
8045A	MV					Y	
8046	T					Y	
8047	MV					Y	
8048	T					Y	
8049	PI					Y	
8050	G					Y	
8051	BP					Y	
8052	MV					Y	
8053	G					Y	
8054	MV					Y	
8055	G					Y	
8056	HAP					Y	
8057	HAP					Y	
8058	T					Y	
8059	T					Y	
8060	T					Y	
8060A	FT					Y	
8060B	G					Y	
8061	G					Y	
8062	G					Y	
8063	G					Y	
8063A	G					Y	
8063B	G					Y	
8064	G					Y	
8065	G					Y	
8065A	G					Y	
8066	G					Y	
8066A	G					Y	
8067	G					Y	
8068	T					Y	
8069	B					Y	
8070	T					Y	
8071	MV					Y	
8072	LT					Y	
8073	T					Y	
8074	P					Y	
8075	LG					Y	
8076	B					Y	
8077	T					Y	
8078	L					Y	

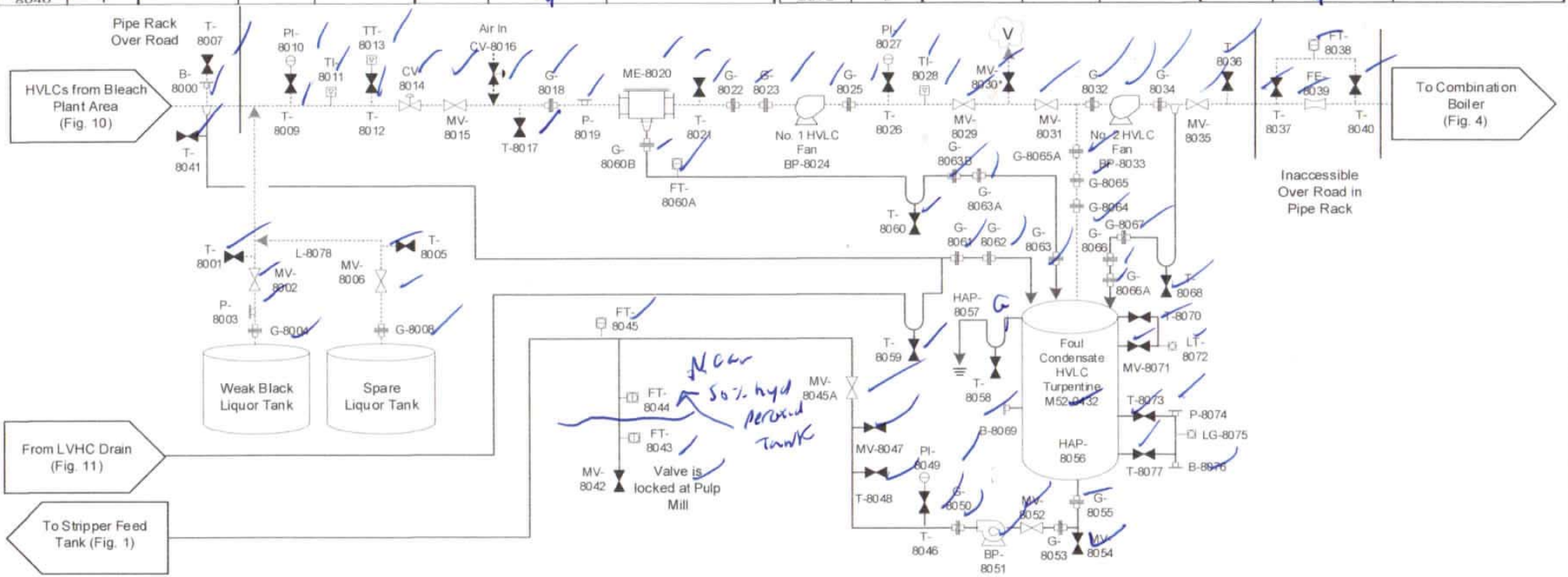

Vent Gases
Condensates
Liquor/Stock Lines
Process Lines

To Another Page and Indicated Equipment

From Another Page and Indicated Equipment

ENVIRONMENTAL 360

New-Indy – Catawba Mill

LDAR Inspection and Testing Diagrams
HVLC Blower Platform

Rev. Date
July 2020

Figure 8

Turpentine Decanter and Standpipe

Completed Date/Time: 1/26/21

Number	Type	Equip. Number	Pressure (+/-)	Background	VOC Reading	Is Component Free of Leaks or Defects?	Comments
9000	T					Y	
9001	T					Y	
9002	TT					Y	
9003	MV	14-MV-0312				Y	
9004	MV					Y	
9005	MV					Y	
9008	MV	14-TI/TW-125				Y	
9009	TI					Y	
9010	T					Y	
9011	T					Y	
9011A	G					Y	
9011B	EJ					Y	
9011C	G					Y	
9012	PI					Y	
9013	P					Y	
9014	FA					Y	
9015	P					Y	
9016	T					Y	
9017	T					Y	
9018	PI	14-PI-125A				Y	
9019	T					Y	
9020	T					Y	
9021	CV	14-HV-127				Y	
9022	T					Y	
9023	T					Y	
9024	T					Y	
9025	PT	14-PSH-122				Y	
9025A	PT	14-PSH-122				Y	
9026	RD					Y	
9027	T					Y	
9028	MV					Y	
9029	CV	14-HV-126				Y	
9030	G					Y	
9031	G					Y	
9031A	HAP					Y	
9031C	MV					Y	
9033	MV	14-MV-0330				Y	
9034	T					Y	
9035	T					Y	
9035A	G					Y	
9035B	EJ					Y	
9035C	G					Y	
9036	PI					Y	
9037	TI	14-TI/TW-304B				Y	
9038	P					Y	
9039	FA	M14-0121				Y	
9040	P					Y	
9041	T					Y	
9042	T					Y	
9043	T					Y	
9044	PI					Y	
9045	CV	14-HV-314				Y	
9046	T					Y	
9047	T					Y	
9048	PT	14-PSH-313				Y	
9048A	PT	14-PSH-313				Y	
9049	RD					Y	
9050	MV	14-MV-0342				Y	
9051	CV	14-HV-312				Y	
9052	MV	14-MV-0343				Y	
9053	G					Y	
9054	MV					Y	
9054A	MV					Y	
9055	PRV					Y	
9056	L					Y	

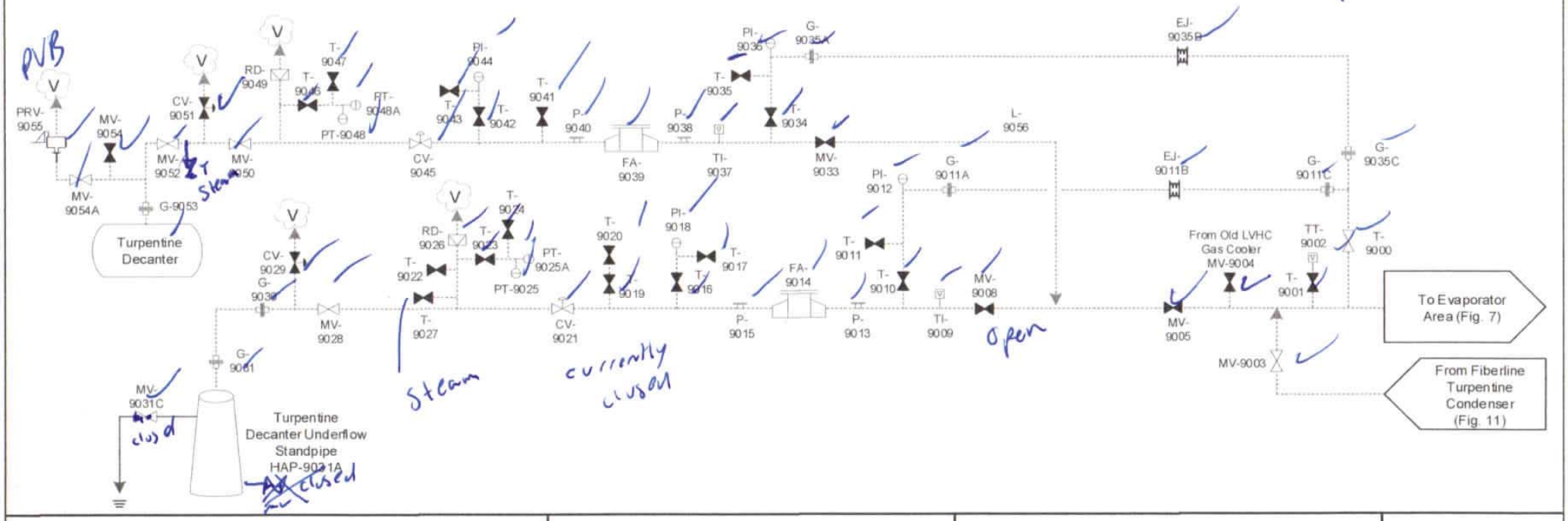

Vent Gases
Condensates
Liquor/Stock Lines
Process Lines

To Another Page and Indicated Equipment

From Another Page and Indicated Equipment

ENVIRONMENTAL 360

New-Indy – Catawba Mill

LDAR Inspection and Testing Diagrams
Turpentine Decanter and Standpipe

Rev. Date
July 2020

Figure 9

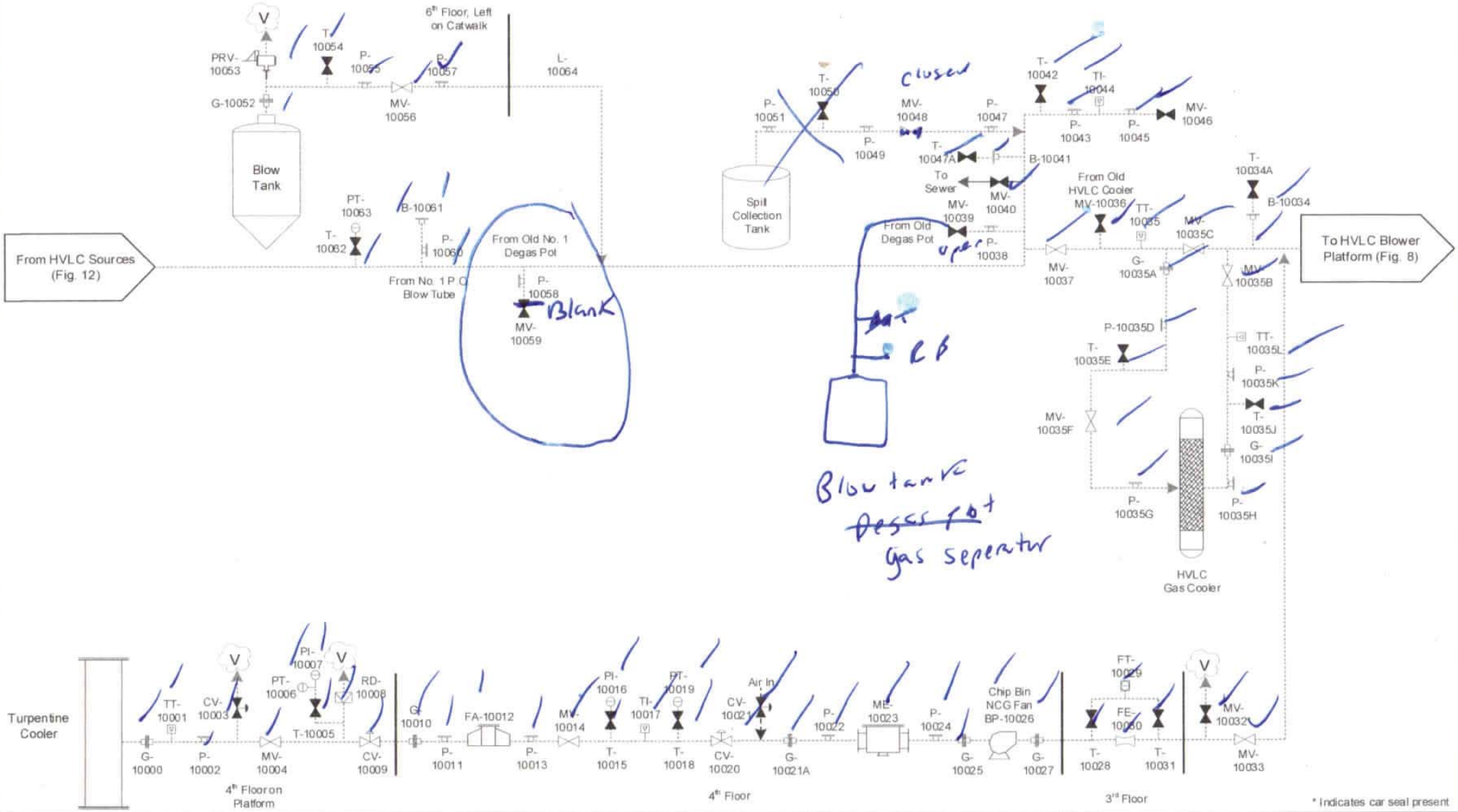

Vent Gases
Condensates
Liquor/Stock Lines
Process Lines

To Another Page and Indicated Equipment

From Another Page and Indicated Equipment

ENVIRONMENTAL 360

New-Indy – Catawba Mill

LDAR Inspection and Testing Diagrams
Turpentine Cooler and Blow Tank

Rev. Date
July 2020

Figure 10

Turpentine Cooler and Blow Tank

Completed Date/Time: 1/27/21

Number	Type	Equip. Number	Pressure (+/-)	Background	VOC Reading	Is Component Free of Leaks or Defects?	Comments
10000	G					Yes	
10001	TT	52-TE-230				Y	
10002	P					Y	
10003	CV	52-QV-937				Y	
10004	MV	52-MV-1021				Y	
10005	T					Y	
10006	PT	52-PSH-934				Y	
10007	PI					Y	
10008	RD					Y	
10009	CV	52-EV-938				Y	
10010	G					Y	
10011	P					Y	
10012	FA	M52-0429				Y	
10013	P					Y	
10014	MV	52-MV-1022				Y	
10015	T					Y	
10016	PI					Y	
10017	TI					Y	
10018	T					Y	
10019	PT					Y	
10020	CV	52-PV-941				Y	
10021	CV					Y	
10021A	G					Y	
10022	P					Y	
10023	ME	M52-0415				Y	
10024	P					Y	
10025	G					Y	
10026	BP	M52-0411				Y	
10027	G					Y	
10028	T					Y	
10029	FT					Y	
10030	FE					Y	
10031	T					Y	
10032	MV					Y	Car seal present.
10033	MV					Y	
10034	B					Y	
10034A	T					Y	
10035	TT	52-TT-947				Y	
10035A	G					Y	
10035B	MV					Y	
10035C	MV					Y	
10035D	P					Yes	
10035E	T					" Y	
10035F	MV					Y	
10035G	P					Y	
10035H	P					Y	
10035I	G					Y	
10035J	T					Y	
10035K	P					Y	
10035L	TT					Y	
10036	MV					Y	
10037	MV					Y	
10038	P					Y	
10039	MV					Y	
10040	MV					Y	
10041	B					Y	
10042	T					Y	
10043	P					Y	
10044	TI					Y	
10045	P					Y	
10046	MV					Y	
10047	P					Y	
10047A	T					Y	
10048	MV	A507				Y	
10049	P					Remove	
10050	T						
10051	P						
10052	G					Y	
10053	PRV					Y	
10054	T					Y	
10055	P					Y	
10056	MV					Y	
10057	P					Y	
10058	P					Y	
10059	~~MV~~ Blank					Y	
10060	P					Y	
10061	B					Y	
10062	T					Y	
10063	PT	52-PT-215				Y	
10064	L					Y	

Turpentine Condenser and LVHC Gas Cooler

Completed Date/Time: 1/27/21

Number	Type	Equip. Number	Pressure (+/-)	Background	VOC Reading	Is Component Free of Leaks or Defects?	Comments
11000	RB					yes	
11001	TT	52-TE-222A				y	
11002	PI					y	
11003	P					y	
11004	G					y	
11005	P					y	
11006	P					y	
11007	FA	M52-0512				y	
11008	P					y	
11008A	HAP					y	
11009	P					y	
11010	G					y	
11011	P					y	
11012	TT	52-TE-225				y	
11013	CV	52-HV-174B				y	
11014	MV	52-A-368				y	
11015	T					y	
11017	T					y	
11018	PT	52-PSH-226				y	
11019	RD					y	
11020	P					y	
11021	CV	52-HV-174A				y	
11022	T	52-A-428				y	
11023	T					y	
11024	PI	52-PI-226				y	
11025	FA	Z00-0395M				y	
11026	P					y	
11027	MV	52-A-541				y	
11028	T	52-A-437				y	
11029	L					y	

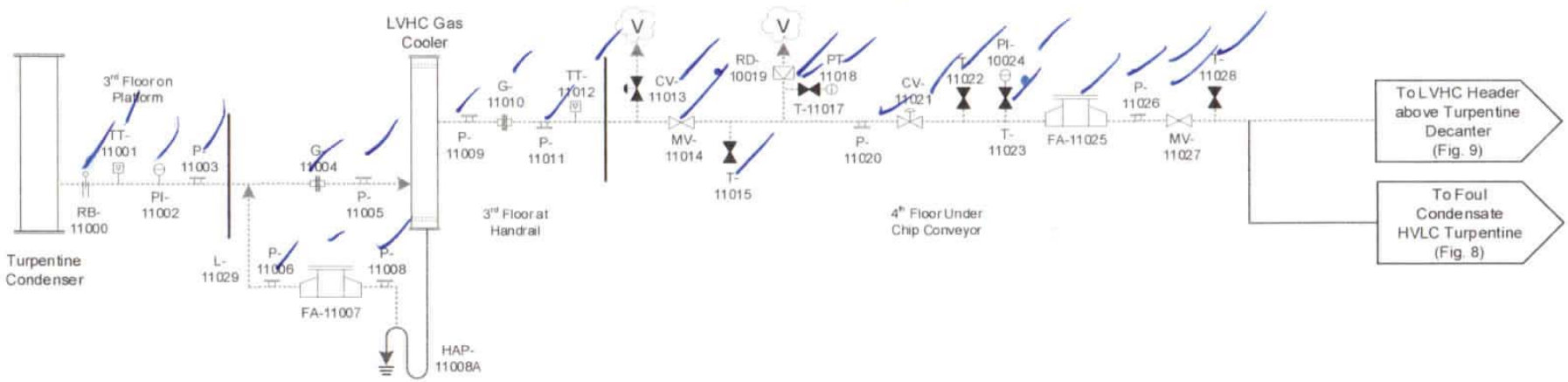

Vent Gases
Condensates
Liquor/Stock Lines
Process Lines

To Another Page and Indicated Equipment

From Another Page and Indicated Equipment

ENVIRONMENTAL 360

New-Indy – Catawba Mill

LDAR Inspection and Testing Diagrams
Turpentine Condenser and LVHC Gas Cooler

Rev. Date
July 2020

Figure 11

HVLC System at Pulp Mil (1 of 2)

Completed Date/Time: 1/27/21

Number	Type	Equip. Number	Pressure (+/-)	Background	VOC Reading	Is Component Free of Leaks or Defects?	Comments
12000	P					yes	
12001	MV					y	
12002	P					y	
12003	T	X182				y	
12004	G					y	
12005	P					y	
12006	MV					y	
12006A	T						Remove
12007	T						
12007A	PI						
12008	PRV						
12008A	T						
12009	RD						
12010	MV						
12011	RD						
12012	B						
12013	P						
12014	G						
12015	P					yes	
12016	MV	Blank				y	
12017	T					Remove	Car seal present.
12018	T	X176					Car seal present.
12019	G						
12020	T	V4454				yes	
12021	P					yes	
12022	MV	0598-22-HY				y	
12023	P					y	
12024	T	D060				y	
12025	P					y	
12026	MV					y	
12027	P					y	
12028	T					y	
12029	P					y	
12030	MV	F543				y	
12031	P					y	
12032	T	F541				y	
12033	G					y	
12034	P					y	
12035	MV	SR307				y	
12036	P						Remove
12037	T	SR314					
12037A	P						
12038	G						
12039	P					yes	
12040	MV	SR308				y	
12041	T					y	
12042	P					y	
12043	G					y	
12044	L					y	

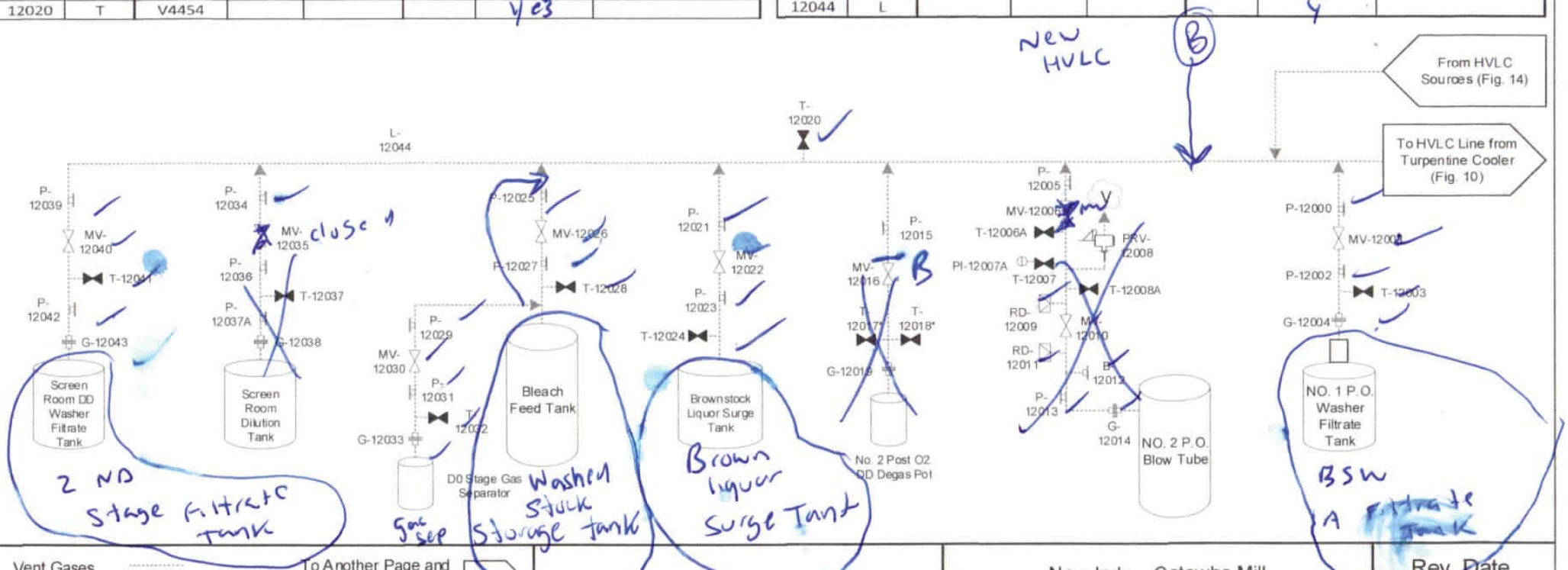

Vent Gases
Condensates
Liquor/Stock Lines
Process Lines

To Another Page and Indicated Equipment

From Another Page and Indicated Equipment

ENVIRONMENTAL 360

New-Indy – Catawba Mill

LDAR Inspection and Testing Diagrams
HVLC System at Pulp Mill (1 of 2)

Rev. Date July 2020

Figure 12

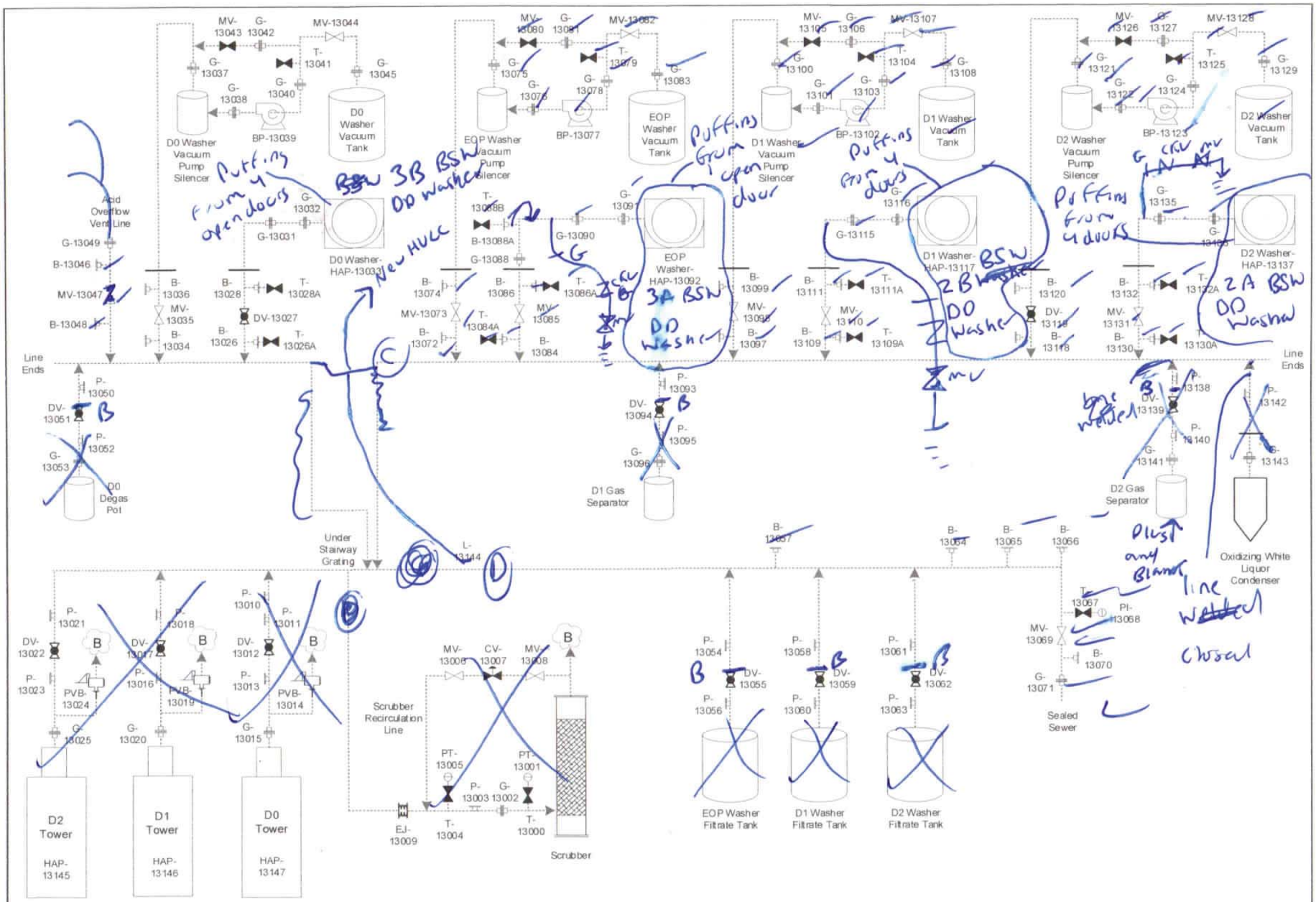

Vent Gases Bleach Gases Condensates Liquor/Stock Lines Process Lines	To Another Page and Indicated Equipment From Another Page and Indicated Equipment	ENVIRONMENTAL 360	New-Indy – Catawba Mill LDAR Inspection and Testing Diagrams Bleach Plant

Rev. Date July 2020

Figure 13

Bleach Plant
Completed Date/Time: 1/27/21

Number	Type	Equip. Number	Pressure (+/-)	Background	VOC Reading	Is Component Free of Leaks or Defects?	Comments
13000	T						
13001	PT	53-PT-322					
13002	G						
13003	P						
13004	T						
13005	PT	53-PT-320					
13006	MV	F420					
13007	CV						
13008	MV	F421					
13009	EJ						
13010	P						
13011	P						
13012	DV	F522					
13013	P						
13014	PVB						
13015	G						
13016	P						
13017	DV	F521					
13018	P						
13019	PVB						
13020	G						
13021	P						
13022	DV	F520					
13023	P						
13024	PVB						
13025	G						
13026	B						
13026A	T						
13027	DV						
13028	B						
13028A	T						
13031	G						
13032	G						
13033	HAP						
13034	B						
13035	MV	F532					
13036	B						
13037	G						
13038	G						
13039	BP	E53-0021					
13040	G						
13041	T	F56					
13042	G						
13043	MV	F99					
13044	MV						
13045	G						
13046	B						
13047	MV						
13048	B						
13049	G						
13050	P						
13051	DV						
13052	P						
13053	G						
13054	P						
13055	DV						
13056	P						
13057	B						
13058	P						
13059	DV						
13060	P						
13061	P						
13062	DV						
13063	P						
13064	B						
13065	B						
13066	B						
13067	T						
13068	PI						
13069	MV						
13070	B						
13071	G						
13072	B						
13073	MV	F530					
13074	B						
13075	G						
13076	G						
13077	BP	E53-0046					
13078	G						
13079	T	F195					
13080	MV	F101					
13081	G						
13082	MV						
13083	G						
13084	B						
13084A	T						
13085	MV	F529					
13086	B						
13086A	T						
13088	G						
13088A	B						
13088B	T						
13090	G						
13091	G						
13092	HAP						
13093	P						
13094	DV	F528					
13095	P						
13096	G						
13097	B						
13098	MV	F527					
13099	B						
13100	G						
13101	G						
13102	BP						
13103	G						
13104	T	F262					
13105	MV	F248					
13106	G						
13107	MV						
13108	G						
13109	B						
13109A	T						
13110	MV						
13111	B						
13111A	T						
13115	G						
13116	G						
13117	HAP						
13118	B						
13119	DV	F524					
13120	B						
13121	G						
13122	G						
13123	BP	E53-0106					
13124	G						
13125	T	F356					
13126	MV	F293					
13127	G						
13128	MV						
13129	G						
13130	B						
13130A	T						
13131	MV						
13132	B						
13132A	T						
13135	G						
13136	G						
13137	HAP						
13138	P						
13139	DV						
13140	P						
13141	G						
13142	P						
13143	G						
13144	L						
13145	HAP						
13146	HAP						
13147	HAP						

Bleach Plant changed to Pulp mill

All LDAR components inspected

JKH 1/27/21

HVLC System at Pulp Mill (2 of 2)

Completed Date/Time: 1/27/21

Number	Type	Equip. Number	Pressure (+/-)	Background	VOC Reading	Is Component Free of Leaks or Defects?	Comments
14000	P					yes	
14001	MV	X170				y	
14002	P					y	
14003	T					y	
14003A	PI	S2-PI-353				y	
14004	G					y	
14005	G					y	
14006	BP	M52-0092				y	
14007	T	X74				y	
14008	MV	X240				y	
14009	MV					y	
14010	G					y	
14011	P					y	
14012	MV	X169				y	
14013	P					y	
14014	T	X179				y	
14015	PI					y	
14016	G					y	
14017	MV					y	
14018	G					y	
14019	~~HAP~~ NA					NO	Puffing
14020	T					y	
14021	MV					y	
14022	T						Remove Remove
14022A	G						
14023	P						
14024	MV	X171				y	
14025	P					y	
14026	T					y	
14027	G					y	
14028	P						Remove
14029	MV						
14030	P						
14031	G						
14032	HAP						
14033	P						
14034	MV						
14035	P						
14036	T	SR316					
14037	G						
14038	HAP						
14039	P						
14040	MV						
14041	P						Remove
14042	T	SR317					
14043	G						
14044	HAP						
14045	P						
14046	T						
14047	PI						
14048	MV	X168					
14049	P						
14051	MV						
14052	G						
14053	~~HAP~~ NA					NO	Puffing
14054	P					yes	
14055	MV	X167				y	
14056	P					y	
14057	T					y	
14057A	PI					y	
14058	G					y	
14059	G					y	
14060	BP	E52-0128				y	
14061	T	X159				y	
14062	MV	X265				y	
14063	MV					y	
14064	G					y	
14065	P					yes	
14066	MV	SR313				yes	
14067	P						Remove Remove
14068	T	SR320					
14069	P					yes	
14070	MV	SR312					Keep Remove
14071	P						
14072	T	SR319					
14073	PI						
14075	MV						
14076	HAP						
14077	P						
14078	MV	SR311				yes yes	~~Remove~~ Keep Remove
14079	P						
14080	T	SR318					
14080A	PI						
14081	G						
14082	G						
14083	BP	E52-0194					
14084	T	SR265					
14085	MV	SR276					
14086	MV						
14087	G						
14088	L					yes	

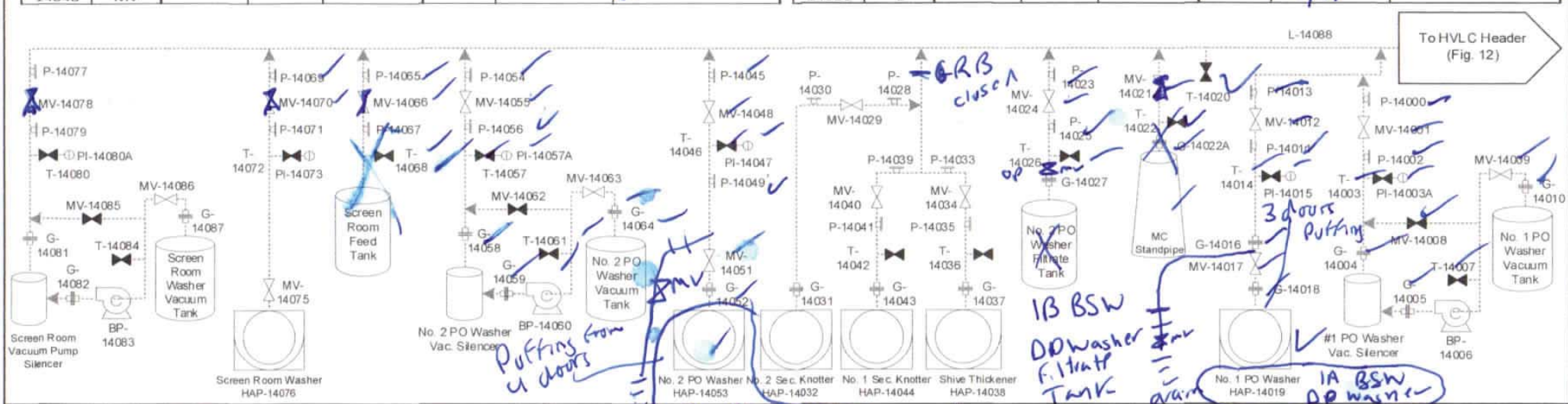

Vent Gases
Condensates
Liquor/Stock Lines
Process Lines

To Another Page and Indicated Equipment

From Another Page and Indicated Equipment

ENVIRONMENTAL 360

New-Indy – Catawba Mill

LDAR Inspection and Testing Diagrams
HVLC System at Pulp Mill (2 of 2)

Rev. Date
July 2020

Figure 14

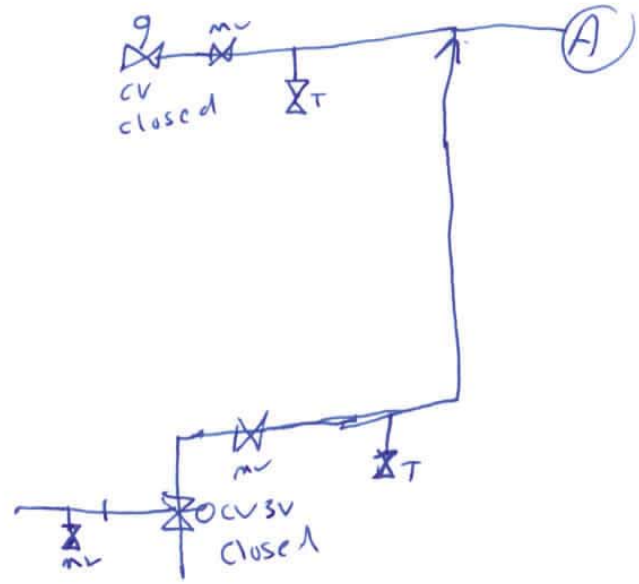
9
mv
CV
closed
T
A
mv
T
CV 3V
Closed
mv

last washer

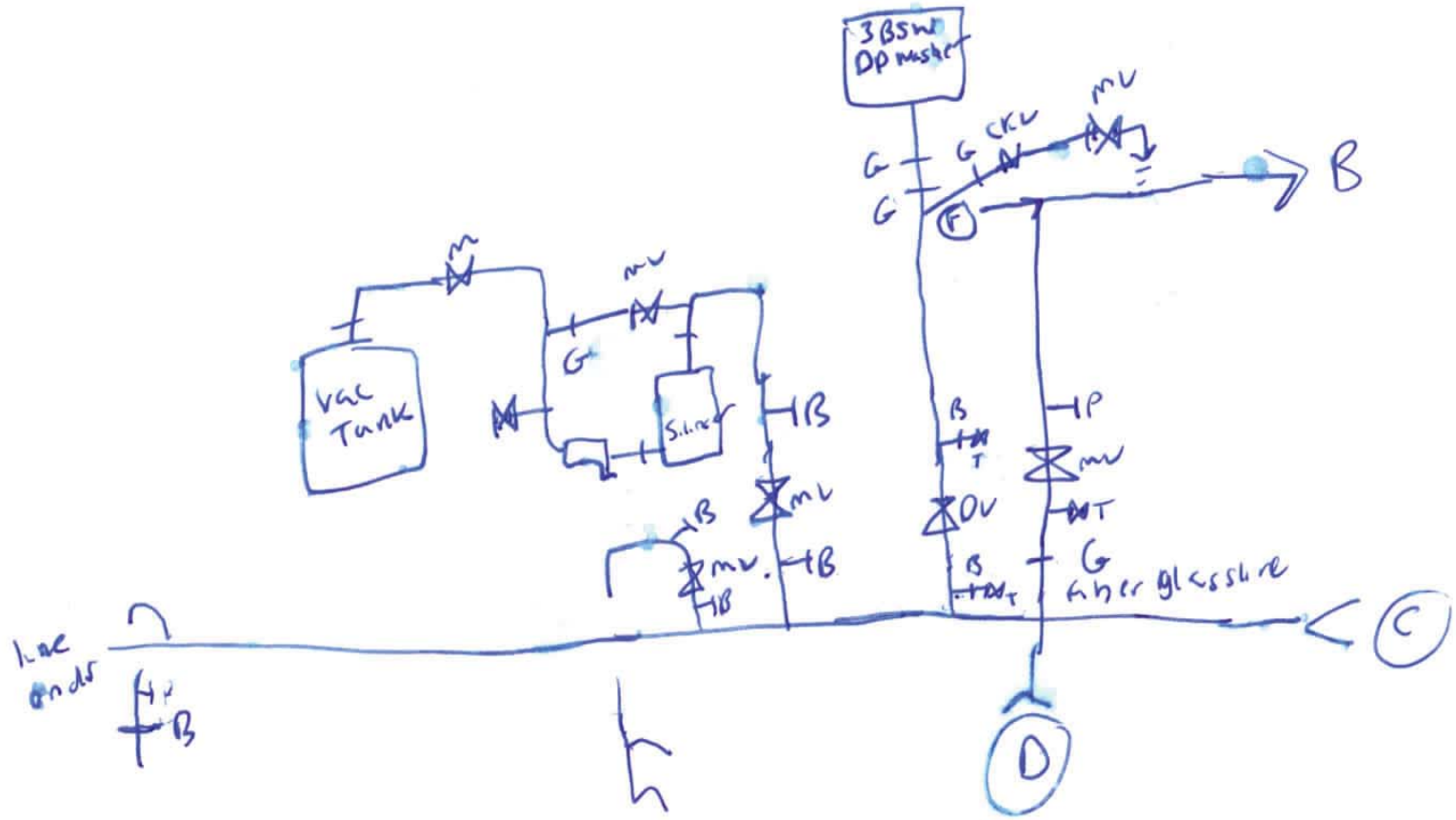
3BSW
DP master
mv
CKV
G
G
G
F
B
Vac Tank
mv
G
Silica
B
mv
B
mv.
B
B
B
T
OV
B
T
P
mv
T
G
After glass sure
line under
C
D

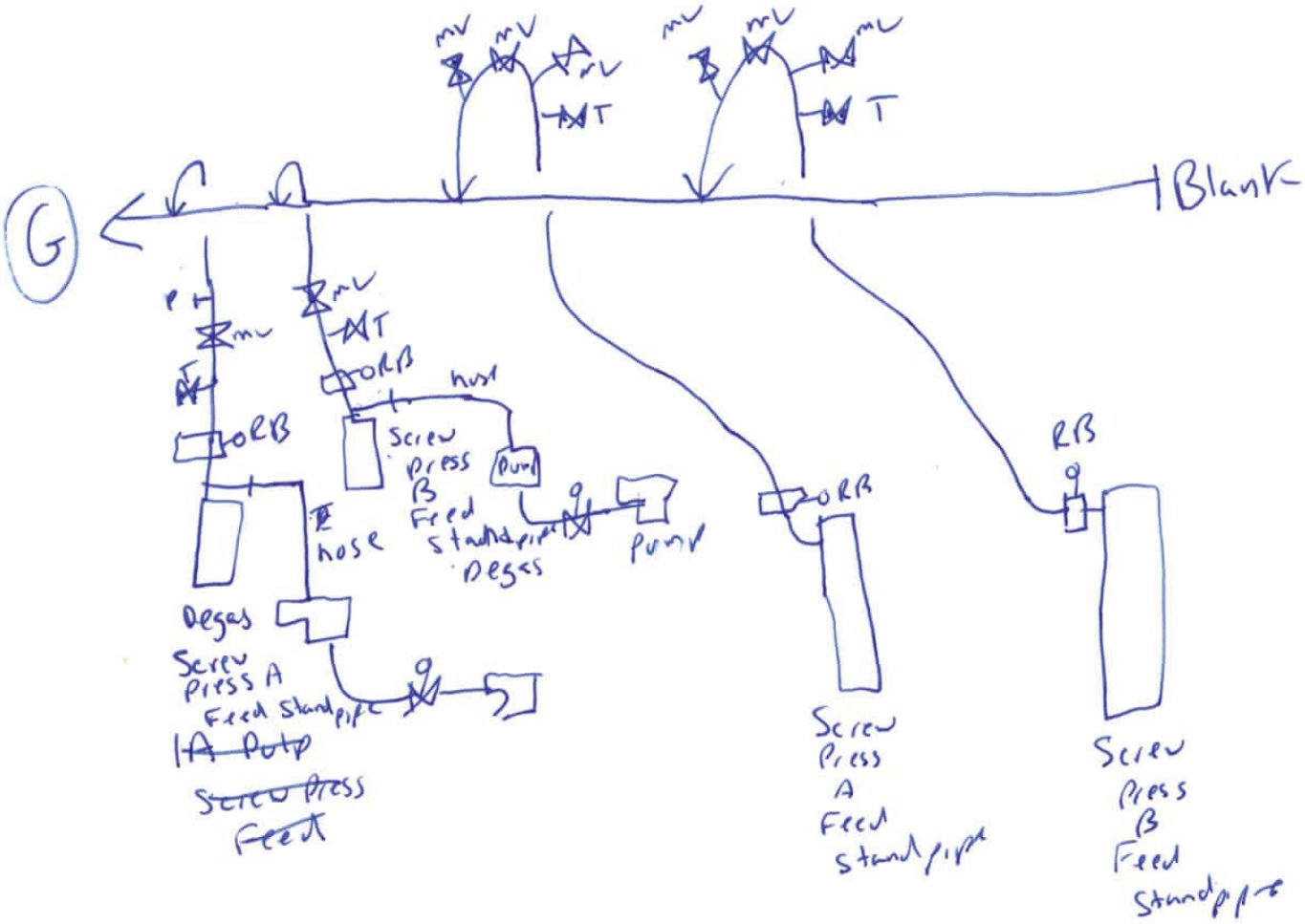
G
Blank
mV
T
ORB
hose
Screw Press B Feed standpipe
Pump
Degas
Screw Press A Feed Standpipe
~~1A Pulp~~
~~Screw Press Feed~~
RB
Screw Press A Feed standpipe
Screw Press B Feed Standpipe

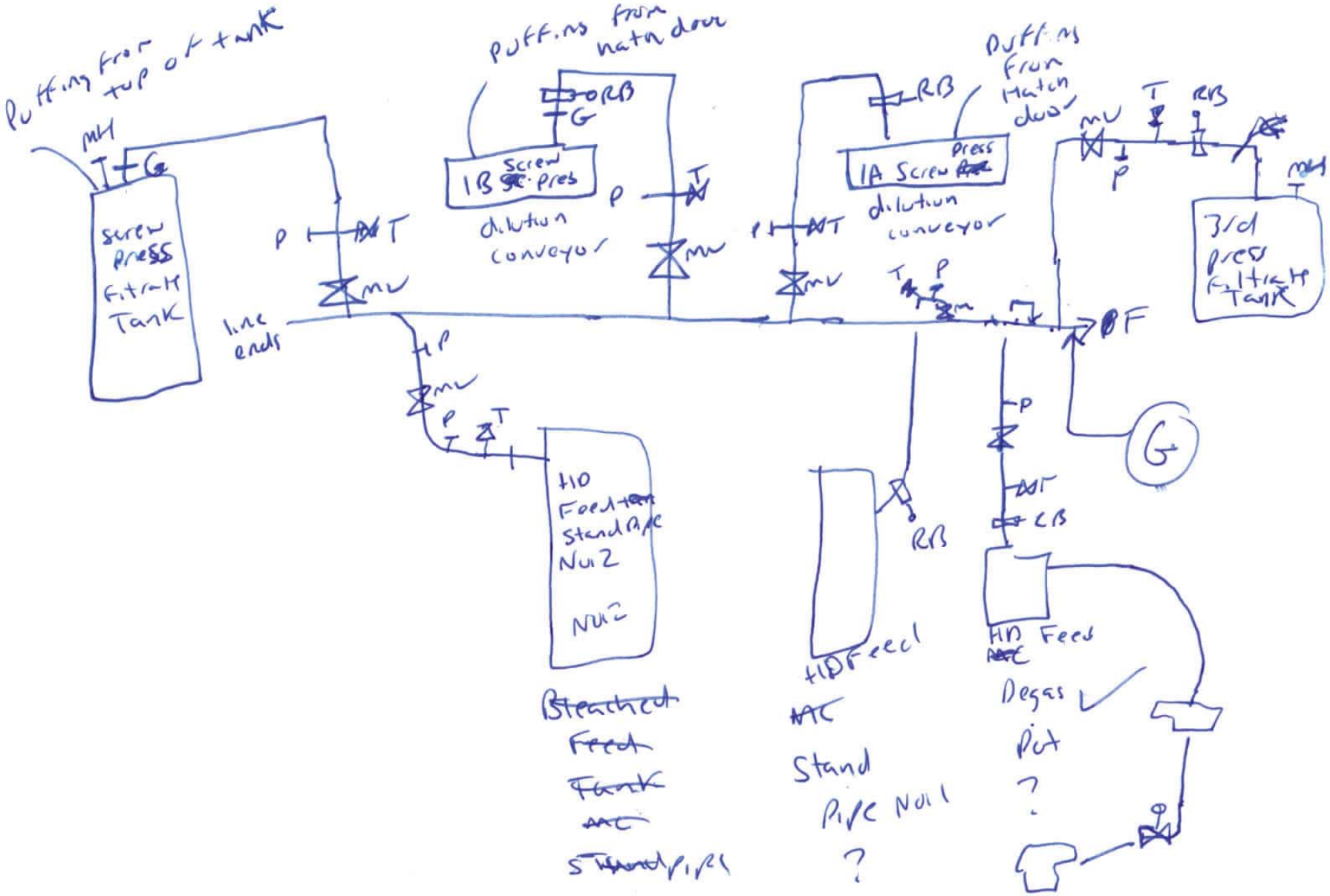
Puffing from top of tank
MH
G
screw press filtrate Tank
P
T
MV
line ends
Puffing from hatch door
RB
G
1B Screw press
dilution conveyor
P
T
MV
RB
1A Screw press
dilution conveyor
P
T
MV
T
P
MV
Puffing from hatch door
MV
T
RB
P
MH
3rd press filtrate Tank
F
G
P
MV
P
T
HD Feed Stand Pipe No 2
No 2
RB
HD Feed
Stand Pipe No 1
?
P
CB
HD Feed
Degas Pot
?
Bleached Feed Tank
Stand Pipe

Inspection Date: February 17, 2021

New Indy Containerboard - Catawba Mill
5300 Cureton Ferry Rd.
Catawba, SC 29704

2021 Monthly LDAR Inspection Summary Report

Table 1: Visual Inspection Summary Table

Equipment Number	Date	Description of Leak or Visual Defect
T-8060	2/17/2021	Tap valve T-8060 is located on foul condensate low point drain, coming from mist eliminator on HVLC line at inlet of No. 1 HVLC fan. The valve is open and dripping.
T-8068	2/17/2021	Tap valve T-8068 is located on foul condensate low point drain, coming from HVLC line at outlet of No. 2 HVLC fan. The valve is open and dripping.
HAP13007	2/17/2021	The 1A Screw Press Dilution Conveyor is puffing from top hatch door.
HAP-13013	2/17/2021	The 1B Screw Press Dilution Conveyor is puffing from top hatch door.
HAP-13117	2/17/2021	The 2B Brown Stock Washer is puffing from four open hatch doors.

First Attempt to Repair must be completed by:	5 Days from Inspection Date	Not Applicable if no leaks were found.
Repairs must be completed by:	15 Days from Inspection Date	Not Applicable if no leaks were found.

This report provides a summary of leaks and visual defects found during the visual inspection of the closed-vent and condensate-collection systems and complies with the record keeping requirements of 63.454(b)(1-2, 4-5).

The facility must initiate repairs to any defects within five (5) calendar days from this inspection and the defects must be repaired within fifteen (15) calendar days of the inspection. If the leak or defect requires the system to be shutdown in order to make repairs, or more emissions would occur from attempting the repair than delaying the repair, then the repairs may be delayed until the next process unit shutdown. A report must be supplied with the repair date and associated information, or the reason for the delay if the repairs are not completed within the 15-day period. These response requirements are specific to 40 CFR 63, specifically 63.453(k)(6), 63.453(l)(3), and 63.964(b)(1-2). Documentation of all repair attempts made and any leaks/defects requiring a process unit shutdown must be completed according to 63.454(b)(6-11).

I certify that the results of the visual inspection are accurate and complete to the best of my knowledge.

Inspector Name: Josh Howard

Signature: Josh Howard

ENVIRONMENTAL360

Inspection QA/QC Procedure

E360 Project Number?	New Indy Catawba
Task Number (if applicable)?	February 2020 Monthly LDAR

Purpose of Form

To verify field work meets each critical element.

Visual Work Flow (WF)

Step 1
R - Verify field work by checking "X" each WF No.

Verification of Critical Elements

WF No.	Requirement	Yes?
	Work-flow step	1
	Verifier of critical elements for work-flow step	R
1	Was a bump test performed on the personal H_2S monitor?	✓
2	Have the most recent versions of the inspection forms been used?	✓
3	Were all inspection points identified correctly and inspected correctly?	✓
4	Did the operator/ contact verify to our inspector that all equipment was operating under normal operating conditions?	✓
5	Were any deficiencies identified in person to the client?	✓
6	Were all inspection questions answered with either a Yes, No, or NA?	✓
7	Were inspections performed during the required regulatory time frame?	✓

Approvals

Role	WF Step	Name	Approval (insert date)
Responsible Person (R)	1	Josh Lee	2/17/2021

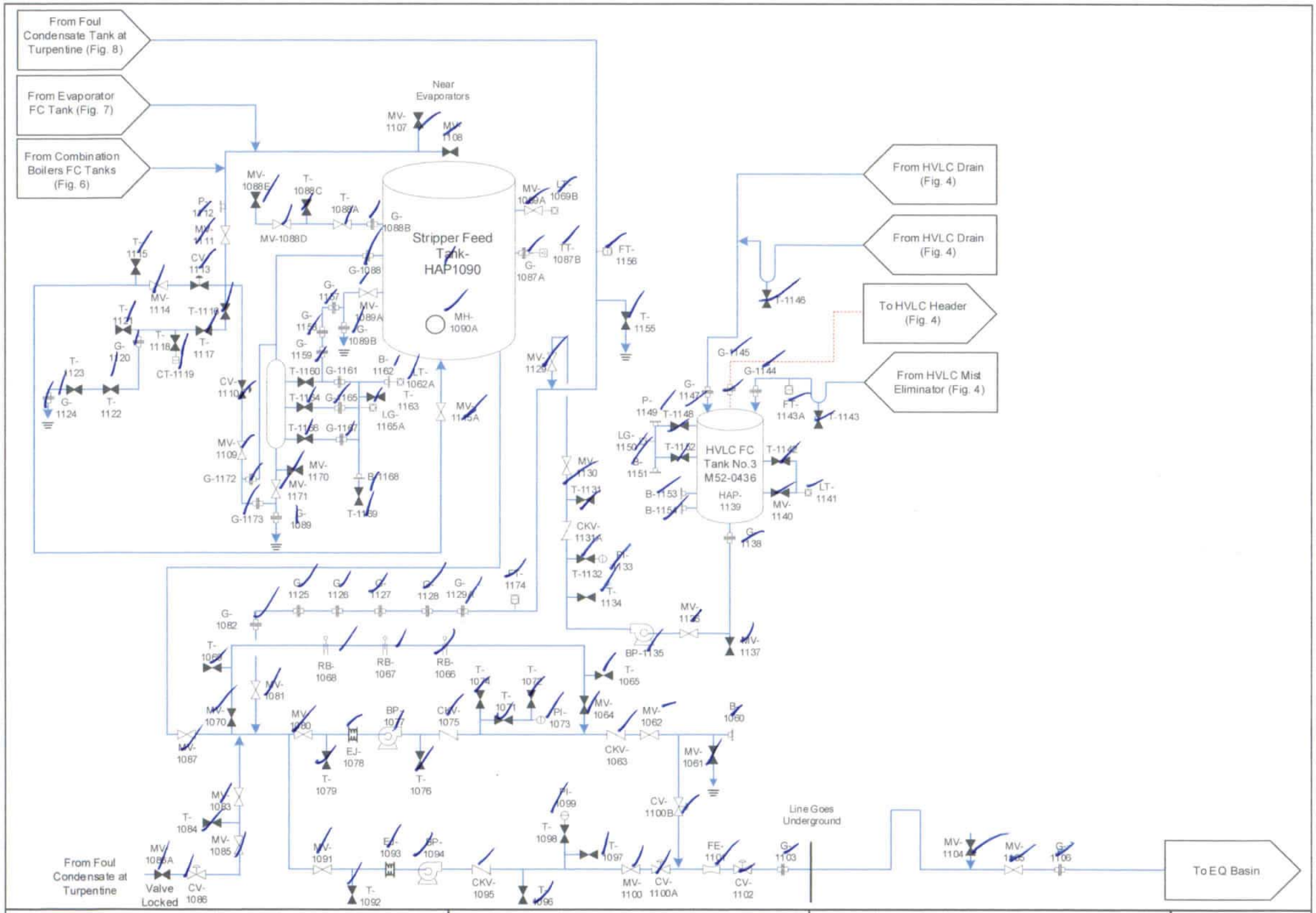

Vent Gases
Condensates
Liquor/Stock Lines
Process Lines

To Another Page and Indicated Equipment

From Another Page and Indicated Equipment

ENVIRONMENTAL 360

New-Indy – Catawba Mill

LDAR Inspection and Testing Diagrams
Stripper System Foul Condensate

Rev. Date
January 2021

Figure 1

Stripper System Foul Condensate
Completed Date/Time: 2/17/21

Number	Type	Equip. Number	Pressure (+/-)	Background	VOC Reading	Is Component Free of Leaks or Defects?	Comments
1060	B					yes	
1061	MV	24-MV-0361				Y	
1062	MV	24-MV-0359				Y	
1062A	LT					Y	
1063	CKV					Y	
1064	MV	24-MV-0445				Y	
1065	T					Y	
1066	RB					Y	
1067	RB					Y	
1068	RB					Y	
1069	T					Y	
1069A	MV					Y	
1069B	LT	51-LT-265				Y	
1070	MV	24-MV-445				Y	
1071	T					Y	
1072	T					Y	
1073	PI					Y	
1074	T					Y	
1075	CKV					Y	
1076	T					Y	
1077	BP					Y	
1078	EJ					Y	
1079	T					Y	
1080	MV	24-MV-363				Y	
1081	MV					Y	
1082	G					Y	
1083	MV	V704F				Y	
1084	T					Y	
1085	MV					Y	
1086	CV	51-HV-269				Y	
1086A	MV					Y	
1087	MV	24-MV-362				Y	
1087A	G					Y	
1087B	TT	51-TT-266				Y	
1088	G					Y	
1088A	T					Y	
1088B	G					Y	
1088C	T					Y	
1088D	MV					Y	
1088E	MV					Y	
1089	G					Y	
1089A	MV	24-MV-0352				Y	
1089B	G					Y	
1090	HAP					Y	
1090A	MH					Y	
1091	MV	24-MV-0365				Y	
1092	T					Y	
1093	EJ					Y	
1094	BP					Y	
1095	CKV	V884F				Y	
1096	T					Y	
1097	T					Y	
1098	T					Y	
1099	PI					Y	
1100	MV	24-MV-360				Y	
1100A	CV					Y	
1100B						Y	
1101	FE					Y	
1102	CV	51-FCV-267				Y	
1103	G					Y	
1104	MV					Y	
1105	MV					Y	
1106	G					Y	
1107	MV					Y	
1108	MV					Y	
1109	MV					Y	
1110	CV					Y	
1111	MV					yes	
1112	P					Y	
1113	CV					Y	
1114	MV					Y	
1115	T					Y	
1115A	MV					Y	
1116	T					Y	
1117	T					Y	
1118	T					Y	
1119	CT					Y	
1120	G					Y	
1121	T					Y	
1122	T					Y	
1123	T					Y	
1124	G					Y	
1125	G					Y	
1126	G					Y	
1127	G					Y	
1128	G					Y	
1129	MV					Y	
1129A	G					Y	
1130	MV					Y	
1131	T					Y	
1131A	CKV					Y	
1132	T					Y	
1133	PI					Y	
1134	T					Y	
1135	BP					Y	
1136	MV					Y	
1137	MV					Y	
1138	G					Y	
1139	HAP	M52-0436				Y	
1140	MV					Y	
1141	LT					Y	
1142	T					Y	
1143	T					Y	
1143A	FT					Y	
1144	G					Y	
1145	G					Y	
1146	T					Y	
1147	G					Y	
1148	T					Y	
1149	P					Y	
1150	LG					Y	
1151	B					Y	
1152	T					Y	
1153	B					Y	
1154	B					Y	
1155	T					Y	
1156	FT					Y	
1157	G					Y	
1158	G					Y	
1159	G					Y	
1160	T					Y	
1161	G					Y	
1162	B					Y	
1163	T					Y	
1164	T					Y	
1165	G					Y	
1165A	LG					Y	
1166	T					Y	
1167	G					Y	
1168	B					Y	
1169	T					Y	
1170	MV					Y	
1171	MV					Y	
1172	G					Y	
1173	G					Y	
1174	FT					Y	
1175	L					Y	

Stripper Feed Tank

Completed Date/Time: 2/17/21

Number	Type	Equip. Number	Pressure (+/-)	Background	VOC Reading	Is Component Free of Leaks or Defects?	Comments
2001	G					Yes	
2002	T					Y	
2003	MV					Y	
2004	T					Y	
2005	CV	51-PCV-264				Y	
2006	CV	51-HV-262				Y	
2007	MV	51-MV-0672				Y	
2008	T					Y	
2009	T					Y	
2010	T					Y	
2011	PT	51-PSH-261				Y	
2011A	PT					Y	
2012	RD					Y	
2013	CV	51-HV-260				Y	
2014	T	51-MV-0675				Y	
2015	T					Y	
2016	T					Y	
2017	PI					Y	
2018	P					Y	
2019	FA	M51-0546				Y	
2020	P					Y	
2021	T					Y	
2022	T					Y	
2023	PI	51-PI-268B				Y	
2024	TI	01-TI-274				Y	
2025	MV	51-MV-0673				Y	
2026	T	24-MV-0353				Y	
2027	L					Y	

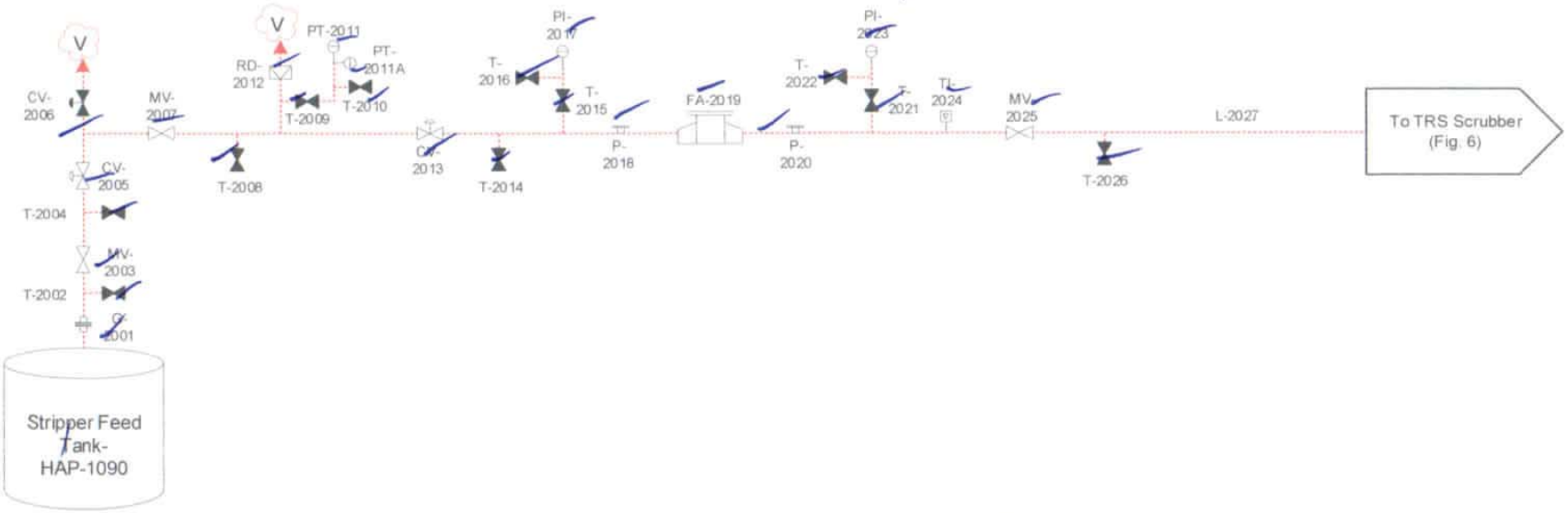

* Indicates car seal present

Vent Gases
Condensates
Liquor/Stock Lines
Process Lines

To Another Page and Indicated Equipment

From Another Page and Indicated Equipment

ENVIRONMENTAL 360

New-Indy – Catawba Mill

LDAR Inspection and Testing Diagrams
Stripper Feed Tank

Rev. Date
January 2021

Figure 2

Combination Boiler HVLC Incinerator
Completed Date/Time: 2/17/21

Number	Type	Equip. Number	Pressure (+/-)	Background	VOC Reading	Is Component Free of Leaks or Defects?	Comments
4000	EJ					Yes	
4001	MV	37-MV-0271				Y	
4002	P					Y	
4003	T					Y	
4004	PI					Y	
4005	FA					Y	
4006	T					Y	
4007	PI					Y	
4008	G					Y	
4009	TT					Y	
4009A	P					Y	
4010	EJ					Y	
4011	MV	37-MV-0270				Y	
4012	T					Y	
4013	PI					Y	
4014	FA					Y	
4015	T					Y	
4016	PI					Y	
4017	EJ					Y	
4018	TT					Y	
4019	MV	26-MV-0628				Y	
4020	T	BOP271				Y	
4021	PI					Y	
4022	FA	M52-0426				Y	
4023	T	BOP270				Y	
4024	PI	52-PI-930				Y	
4025	EJ					Y	
4026	MV					Y	
4027	P					Y	
4028	T					Y	
4029	PI					Y	
4030	FA					Y	
4031	T					Y	
4032	PI					Y	
4033	CV					Y	
4034	MV	26-MV-0626				Y	
4035	T					Y	
4036	PT	52-PSH-960				Y	
4037	MV	52-MV-0625				Y	
4038	RD					Y	
4039	MV					Y	
4040	CV					Y	
4041	CV					Y	
4042	G					Y	
4043	TT	52-TT-965				Y	
4044	P					Y	
4044A	P					Y	
4045	G					Y	
4046	G					Y	
4047	P					Y	
4048	ME					Y	
4048A	G					Y	
4049	P					Y	
4050	G					Y	
4051	L					Y	

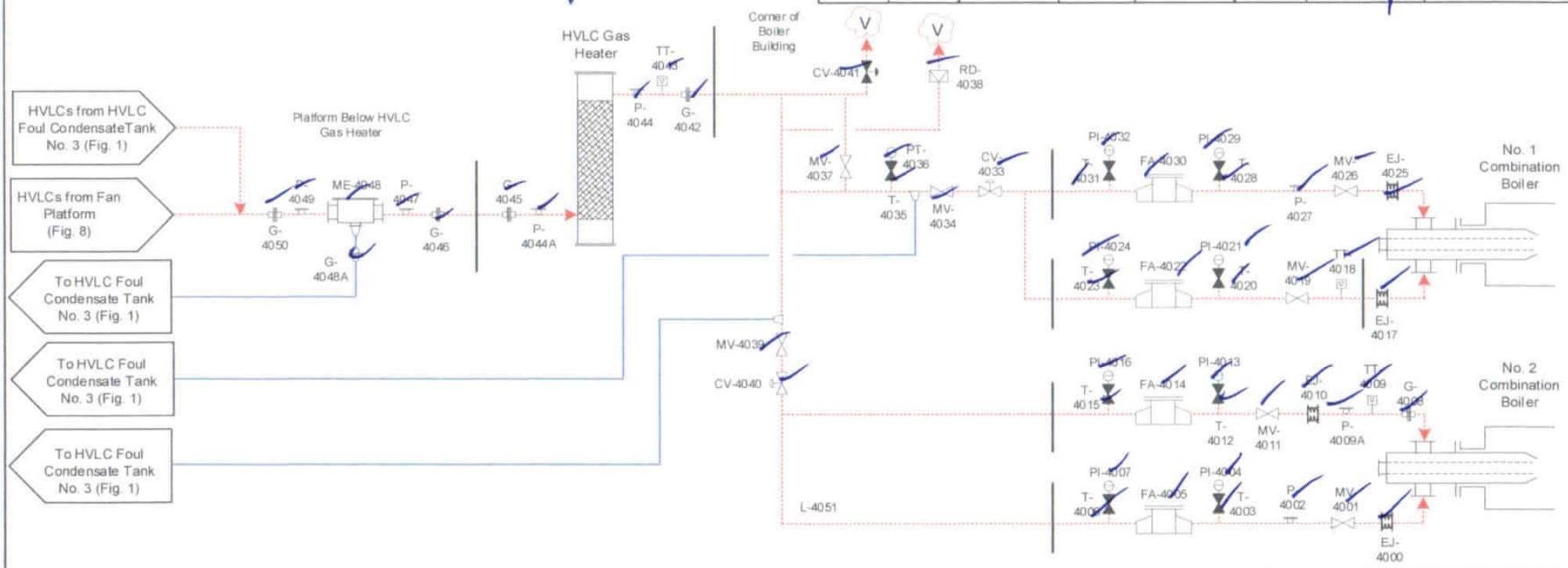

Vent Gases
Condensates
Liquor/Stock Lines
Process Lines

To Another Page and Indicated Equipment
From Another Page and Indicated Equipment

ENVIRONMENTAL 360

New-Indy – Catawba Mill

LDAR Inspection and Testing Diagrams
Combination Boiler HVLC Incineration

Rev. Date
January 2021

Figure 4

Combination Boiler SOG and LVHC Incineration

Completed Date/Time: 2/17/21

Number	Type	Equip. Number	Pressure (+/-)	Background	VOC Reading	Is Component Free of Leaks or Defects?	Comments
5014	G					Yes	
5015	EJ					Y	
5016	MV	37-MV-0313				Y	
5017	T					Y	
5018	PT	37-PT-385				Y	
5019	TT	37-TT-384				Y	
5020	P					Y	
5021	FA					Y	
5022	P					Y	
5023	T					Y	
5024	PT	37-PT-383				Y	
5039	G					Y	
5040	EJ					Y	
5041	MV	26-MV-0532				Y	
5042	T					Y	
5043	PT	26-PT-377				Y	
5044	TT					Y	
5045	P					Y	
5046	FA					Y	
5047	P					Y	
5048	T					Y	
5049	PT	26-PT-375				Y	
5050	L					Y	

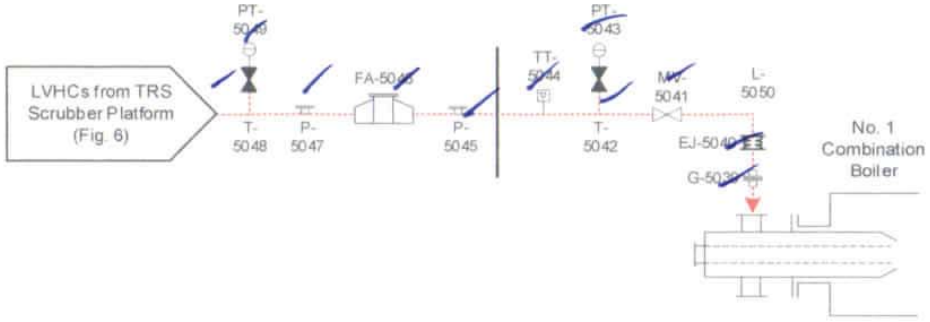

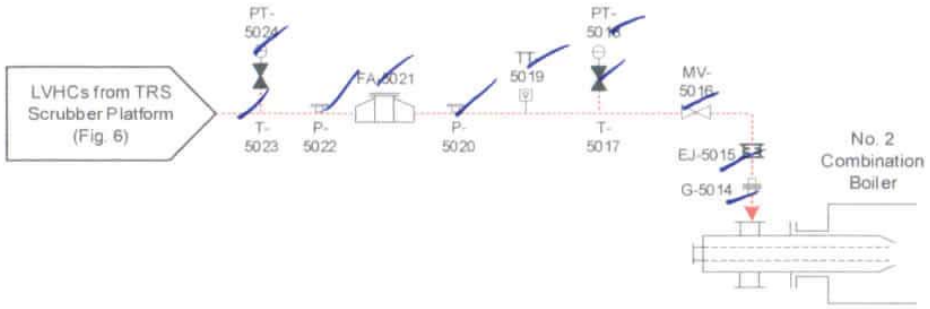

Vent Gases
Condensates
Liquor/Stock Lines
Process Lines

To Another Page and Indicated Equipment

From Another Page and Indicated Equipment

ENVIRONMENTAL 360

New-Indy – Catawba Mill

LDAR Inspection and Testing Diagrams

Combination Boiler SOG and LVHC Incineration

Rev. Date January 2021

Figure 5

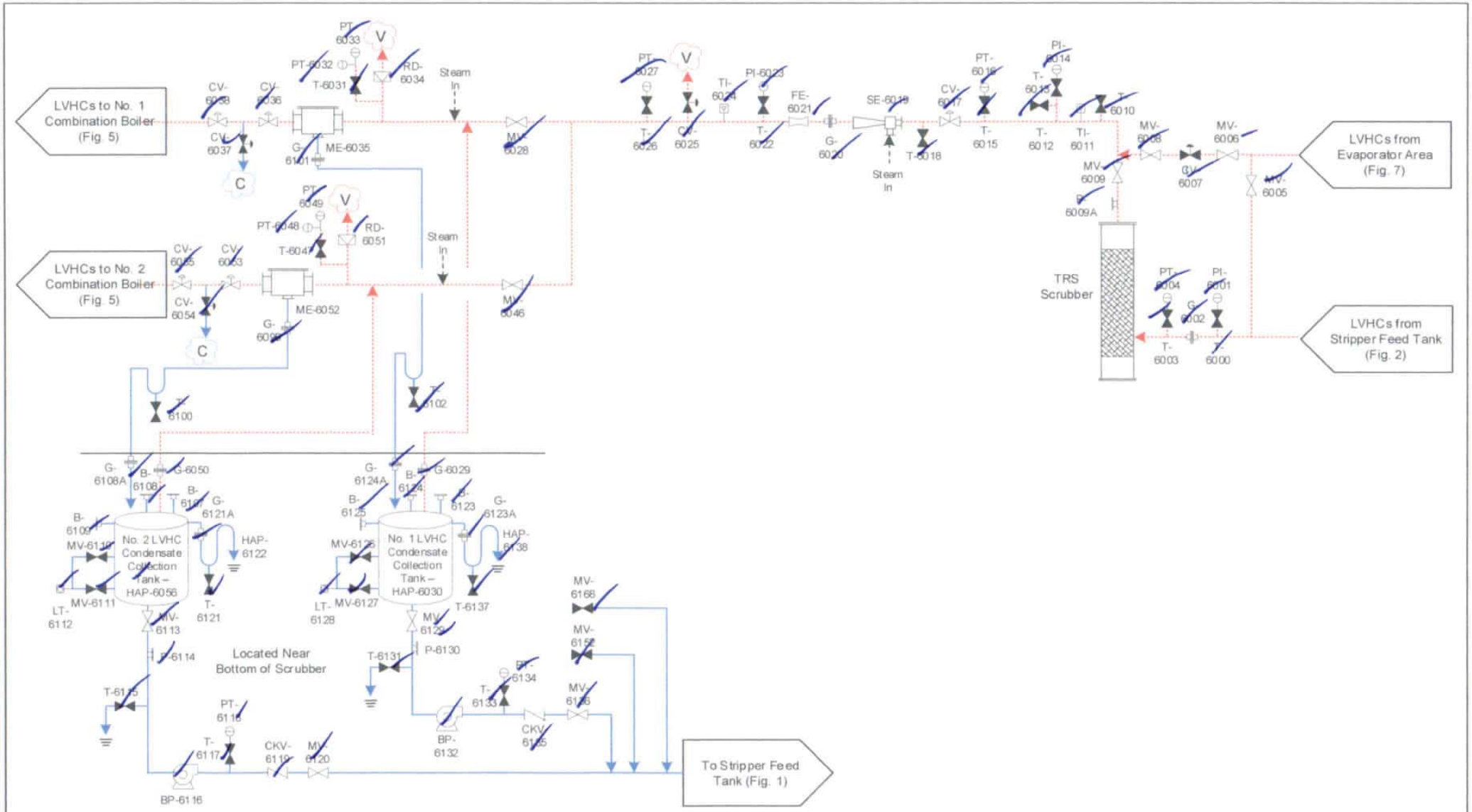

Vent Gases Condensates Liquor/Stock Lines Process Lines	To Another Page and Indicated Equipment From Another Page and Indicated Equipment	ENVIRONMENTAL 360	New-Indy – Catawba Mill LDAR Inspection and Testing Diagrams TRS Scrubber Platform
			Rev. Date January 2021 Figure 6

TRS Scrubber Platform

Completed Date/Time: 2/17/21

Number	Type	Equip. Number	Pressure (+/-)	Background	VOC Reading	Is Component Free of Leaks or Defects?	Comments
6000	T					yes	
6001	PI					y	
6002	G					y	
6003	T					y	
6004	PT					y	
6005	MV	26-MV-0485				y	
6006	MV	26-MV-0486				y	
6007	CV	26-HV-364				y	
6008	MV	26-MV-0575				y	
6009	MV	26-MV-0507				y	
6009A	P					y	
6010	T					y	
6011	TI					y	
6012	T					y	
6013	T					y	
6014	PI					y	
6015	T					y	
6016	PT					y	
6017	CV	26-PCV-365				y	
6018	T					y	
6019	SE					y	
6020	G					y	
6021	FE					y	
6022	T					y	
6023	PI					y	
6024	TI					y	
6025	CV					y	
6026	T					y	
6027	PT	26-PT-372				y	
6028	MV					y	
6029	G					y	
6030	HAP					y	
6031	T					y	
6032	PT					y	
6033	PT	26-PSH-373				y	
6034	RD					y	
6035	ME					y	
6036	CV					y	
6037	CV					y	
6038	CV					y	
6046	MV					y	
6047	T					y	
6048	PT	37-PSH-381				y	
6049	PT					y	
6050	G					y	
6051	RD					yes	
6052	ME					y	
6053	CV	37-HV-382A				y	
6054	CV	37-HV-043				y	
6055	CV	37-HV-382B				y	
6056	HAP					y	
6099	G					y	
6100	T					y	
6101	G					y	
6102	T					y	
6107	B					y	
6108	B					y	
6108A	G					y	
6109	B					y	
6110	MV					y	
6111	MV					y	
6112	LT					y	
6113	MV					y	
6114	P					y	
6115	T					y	
6116	BP					y	
6117	T					y	
6118	PT					y	
6119	CKV					y	
6120	MV					y	
6121	T					y	
6121A	G					y	
6122	HAP					y	
6123	B					y	
6123A	G					y	
6124	B					y	
6124A	G					y	
6125	B					y	
6126	MV					y	
6127	MV					y	
6128	LT					y	
6129	MV					y	
6130	P					y	
6131	T					y	
6132	BP					y	
6133	T					y	
6134	PT					y	
6135	CKV					y	
6136	MV					y	
6137	T					y	
6138	HAP					y	
6152	MV					y	
6168	MV					y	
6171	L					y	

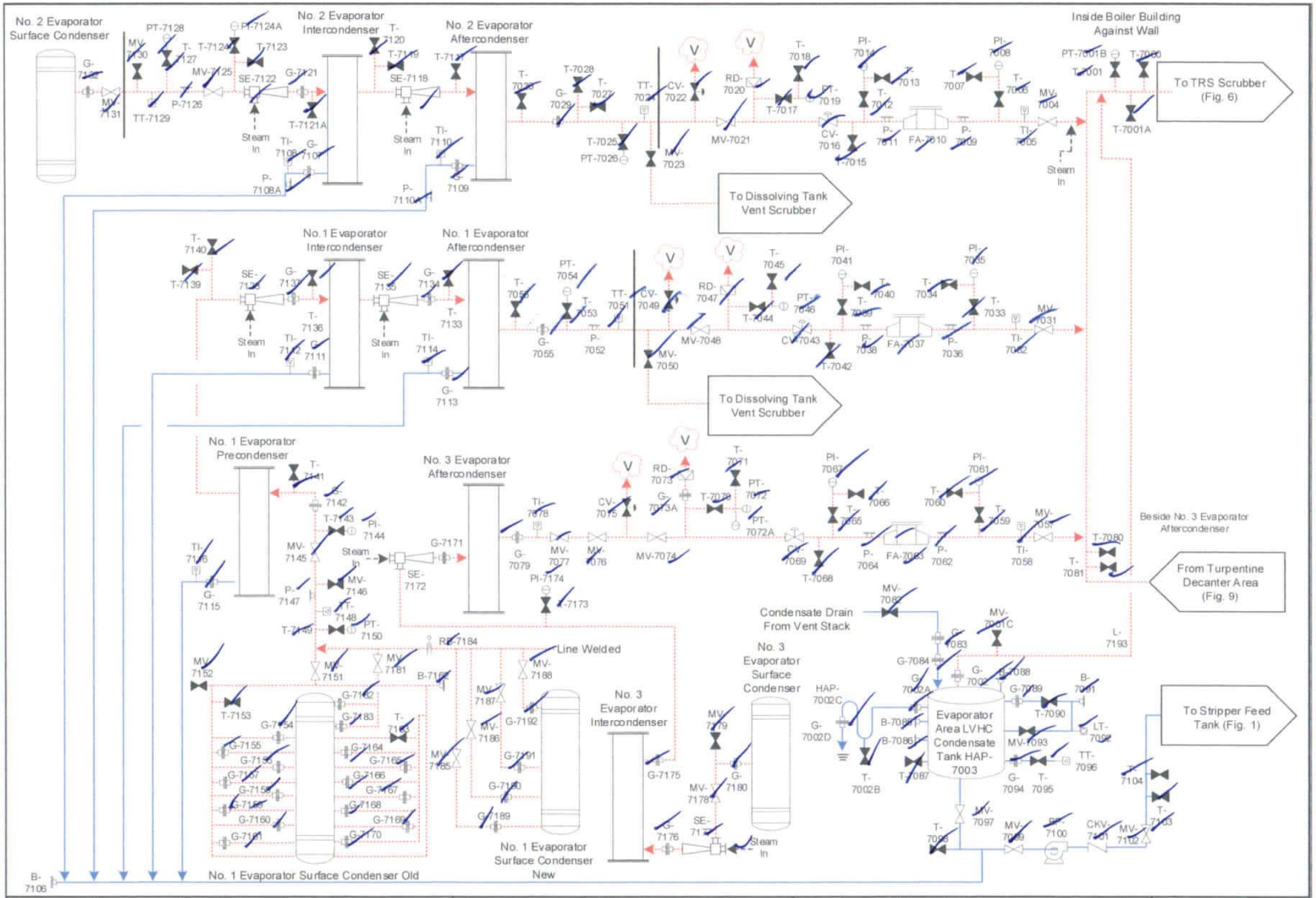

Vent Gases Condensates Liquor/Stock Lines Process Lines	To Another Page and Indicated Equipment From Another Page and Indicated Equipment	ENVIRONMENTAL 360	New-Indy – Catawba Mill LDAR Inspection and Testing Diagrams Evaporator System	Rev. Date January 2021 Figure 7

Evaporator System
Completed Date/Time: 2/17/21

Number	Type	Equip. Number	Pressure (+/-)	Background	VOC Reading	Is Component Free of Leaks or Defects?	Comments
7000	T					Y	
7001	T					Y	
7001A	T					Y	
7001B	PT					Y	
7001C	MV					Y	
7002	G					Y	
7002A	G					Y	
7002B	T					Y	
7002C	HAP					Y	
7002D	G					Y	
7003	HAP					Y	
7004	MV					Y	
7005	TI					Y	
7006	T					Y	
7007	T					Y	
7008	PI					Y	
7009	P					Y	
7010	FA					Y	
7011	P					Y	
7012	T					Y	
7013	T					Y	
7014	PI					Y	
7015	T	24-MV-0380				Y	
7016	CV	24-HV-334				Y	
7017	T					Y	
7018	T					Y	
7019	PT					Y	
7020	RD					Y	
7021	MV	24-MV-0378				Y	
7022	CV	24-HV-336				Y	
7023	MV					Y	
7024	TT	24-TE-358				Y	
7025	T					Y	
7026	PT	24-PT-357				Y	
7027	T					Y	
7028	T					Y	
7029	G					Y	
7030	T					Y	
7031	MV	24-MV-0389				Y	
7032	TI					Y	
7033	T					Y	
7034	T					Y	
7035	PI					Y	
7036	P					Y	
7037	FA					Y	
7038	P					Y	
7039	T					Y	
7040	T					Y	
7041	PI					Y	
7042	T	24-MV-0388				Y	
7043	CV	24-HV-329				Y	
7044	T					Y	
7045	T					Y	
7046	PT					Y	
7047	RD					Y	
7048	MV	24-MV-0387				Y	
7049	CV	24-HV-331				Y	
7050	MV					Y	
7051	TT	24-TT-364				Y	
7052	P					Y	
7053	T					Y	
7054	PT	24-PT-363				Y	
7055	G					Y	
7056	T					Y	
7057	MV	51-MV-0660				Y	
7058	TI					Y	
7059	T					Y	
7060	T					Y	
7061	PI					Y	
7062	P					Y	
7063	FA					Y	
7064	P					Y	
7065	T					Y	
7066	T					Y	
7067	PI					Y	
7068	T	51-MV-0659				Y	
7069	CV	24-HV-339				Y	
7070	T					Y	
7071	T					Y	
7072	PT					Y	
7072A	PT					Y	
7073	RD					Y	
7073A	G					Y	
7074	MV	51-MV-0658				Y	
7075	CV	24-HV-341				Y	
7076	MV	51-MV-0657				Y	
7077	MV	51-MV-769				Y	
7078	TI					Y	
7079	G					Y	
7080	T					Y	
7081	T					Y	
7082	MV					Y	
7083	G					Y	
7084	G					Y	
7085	B					Y	
7086	B					Y	
7087	T					Y	
7088	B					Y	
7089	G					Y	
7090	T					Y	
7091	B					Y	
7092	LT					Y	
7093	MV					Y	
7094	G					Y	
7095	T					Y	
7096	TT					Y	
7097	MV					Y	
7098	T					Y	
7099	MV					Y	
7100	BP					Y	
7101	CKV					Y	
7102	MV					Y	
7103	T					Y	
7104	T					Y	
7106	B					Y	
7107	G					Y	
7108	TI					Y	
7108A	P					Y	
7109	G					Y	
7110	TI					Y	
7110A	P					Y	
7111	G					Y	
7112	TI					Y	
7113	G					Y	
7114	TI					Y	
7115	G					Y	
7116	TI					Y	
7117	T					Y	
7118	SE					Y	
7119	T					Y	
7120	T					Y	
7121	G					Y	
7121A	T					Y	
7122	SE					Y	
7123	T					Y	
7124	T					Y	
7124A	PI					Y	
7125	MV					Y	
7126	P					Y	
7127	T					Y	
7128	PT					Y	
7129	TT					Y	
7130	MV					Y	
7131	MV					Y	
7132	G					Y	
7133	T					Y	
7134	G					Y	
7135	SE					Y	
7136	T					Y	
7137	G					Y	
7138	SE					Y	
7139	T					Y	
7140	T					Y	
7141	T					Y	
7142	G					Y	
7143	T					Y	
7144	PI					Y	
7145	MV					Y	
7146	MV					Y	
7147	P					Y	
7148	TI					Y	
7149	T					Y	
7150	PT					Y	
7151	MV					Y	
7152	MV	24-MV-0399				Y	
7153	T					Y	
7154	G					Y	
7155	G					Y	
7156	G					Y	
7157	G					Y	
7158	G					Y	
7159	G					Y	
7160	G					Y	
7161	G					Y	
7162	B					Y	
7163	T					Y	
7164	G					Y	
7165	G					Y	
7166	G					Y	
7167	G					Y	
7168	G					Y	
7169	G					Y	
7170	G					Y	
7171	G					Y	
7172	SE					Y	
7173	T	51-MV-0774				Y	
7174	PI					Y	
7175	G					Y	
7176	G					Y	
7177	SE					Y	
7178	MV	51-MV-0783				Y	
7179	MV	51-MV-0782				Y	
7180	G					Y	
7181	MV					Y	
7182	G					Y	
7183	G					Y	
7184	RB					Y	
7185	MV					Y	
7186	MV					Y	
7187	MV					Y	
7188	MV					Y	
7189	G					Y	
7190	G					Y	
7191	G					Y	
7192	G					Y	
7193	L					Y	

HVLC Blower Platform
Completed Date/Time: 2/17/21

Number	Type	Equip. Number	Pressure (+/-)	Background	VOC Reading	Is Component Free of Leaks or Defects?	Comments
8000	B					Y	
8001	T					Y	
8002	MV					Y	
8003	P					Y	
8004	G					Y	
8005	T					Y	
8006	MV					Y	
8007	T					Y	
8008	G					Y	
8009	T					Y	
8010	PI					Y	
8011	TI					Y	
8012	T					Y	
8013	TT					Y	
8014	CV	54-PV-953				Y	
8015	MV	26-MV-0618				Y	
8016	CV					Y	
8017	T	26-MV-0619				Y	
8018	G					Y	
8019	P					Y	
8020	ME					Y	
8021	T					Y	
8022	G					Y	
8023	G					Y	
8024	BP	M52-0412				Y	
8025	G					Y	
8026	T					Y	
8027	PI	52-PI-958				Y	
8028	TI					Y	
8029	MV	26-MV-0670				Y	
8030	MV					Y	Car seal present.
8031	MV					Y	
8032	G					Y	
8033	BP	M52				Y	
8034	G					Y	
8035	MV	26-MV-0622				Y	
8036	T					Y	
8037	T					Y	
8038	FT					Y	
8039	FE					Y	
8040	T					Y	
8041	T					Y	
8042	MV					Y	
8043	FT					Y	
8044	FT					Y	
8045	FT					Y	
8045A	MV					Y	
8046	T					Y	
8047	MV					Y	
8048	T					Y	
8049	PI					Y	
8050	G					Y	
8051	BP					Y	
8052	MV					Y	
8053	G					Y	
8054	MV					Y	
8055	G					Y	
8056	HAP					Y	
8057	HAP					Y	
8058	T					Y	
8059	T					Y	
8060	T					NO	open + dripping
8060A	FT					Y	
8060B	G					Y	
8061	G					Y	
8062	G					Y	
8063	G					Y	
8063A	G					Y	
8063B	G					Y	
8064	G					Y	
8065	G					Y	
8065A	G					Y	
8066	G					Y	
8066A	G					Y	
8067	G					Y	
8068	T					NO	open + dripping
8069	B					Y	
8070	T					Y	
8071	MV					Y	
8072	LT					Y	
8073	T					Y	
8074	P					Y	
8075	LG					Y	
8076	B					Y	
8077	T					Y	
8078	L					Y	

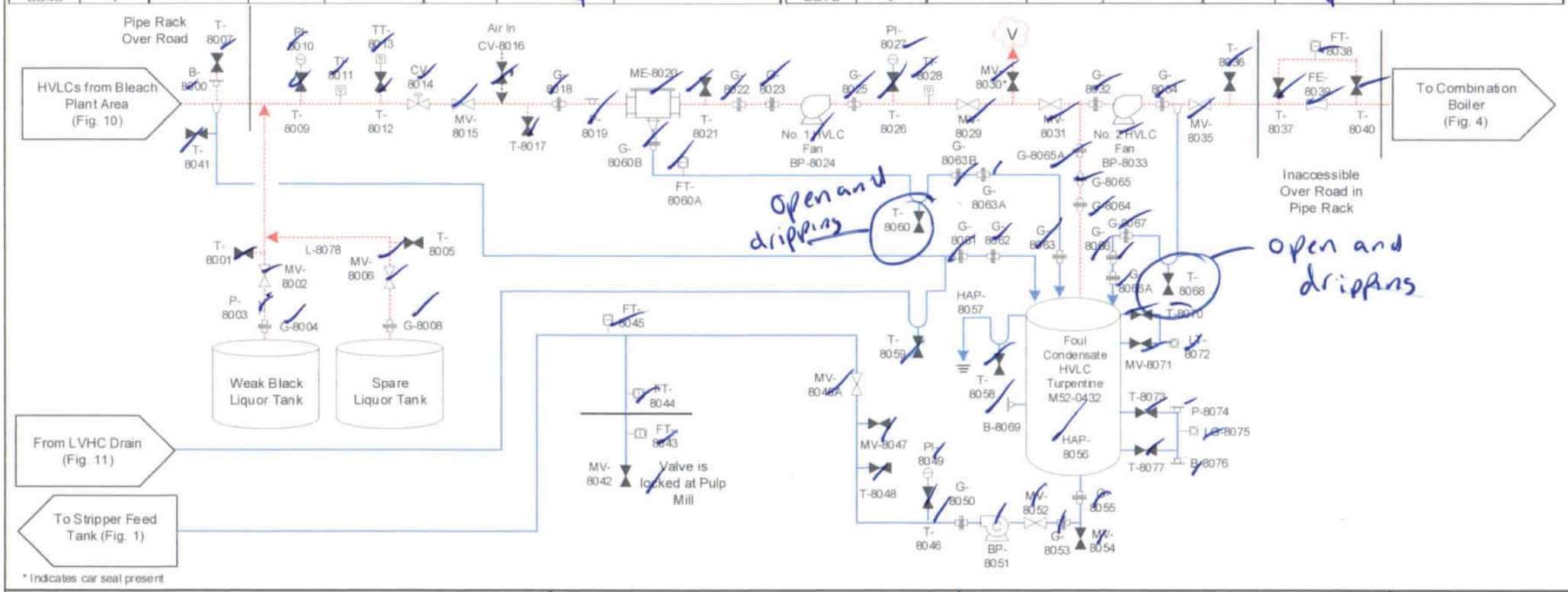

Vent Gases
Condensates
Liquor/Stock Lines
Process Lines

To Another Page and Indicated Equipment
From Another Page and Indicated Equipment

ENVIRONMENTAL 360

New-Indy – Catawba Mill

LDAR Inspection and Testing Diagrams
HVLC Blower Platform

Rev. Date
January 2021

Figure 8

Turpentine Decanter and Standpipe

Completed Date/Time: 2/17/21

Number	Type	Equip. Number	Pressure (+/-)	Background	VOC Reading	Is Component Free of Leaks or Defects?	Comments
9000	T					yes	
9001	T					y	
9002	TT					y	
9003	MV	14-MV-0312				y	
9004	MV					y	
9005	MV					y	
9008	MV	14-TI/TW-125				y	
9009	TI					y	
9010	T					y	
9011	T					y	
9011A	G					y	
9011B	EJ					y	
9011C	G					y	
9012	PI					y	
9013	P					y	
9014	FA					y	
9015	P					y	
9016	T					y	
9017	T					y	
9018	PI	14-PI-125A				y	
9019	T					y	
9020	T					y	
9021	CV	14-HV-127				y	
9022	T					y	
9023	T					y	
9024	T					y	
9025	PT	14-PSH-122				y	
9025A	PT	14-PSH-122				y	
9026	RD					y	
9027	T					y	
9028	MV					y	
9029	CV	14-HV-126				yes	
9030	G					y	
9031	G					y	
9031A	HAP					y	
9031C	MV					y	
9033	MV	14-MV-0330				y	
9034	T					y	
9035	T					y	
9035A	G					y	
9035B	EJ					y	
9035C	G					y	
9036	PI					y	
9037	TI	14-TI/TW-304B				y	
9038	P					y	
9039	FA	M14-0121				y	
9040	P					y	
9041	T					y	
9042	T					y	
9043	T					y	
9044	PI					y	
9045	CV	14-HV-314				y	
9046	T					y	
9047	T					y	
9048	PT	14-PSH-313				y	
9048A	PT	14-PSH-313				y	
9049	RD					y	
9050	MV	14-MV-0342				y	
9051	CV	14-HV-312				y	
9052	MV	14-MV-0343				y	
9053	G					y	
9054	MV					y	
9054A	MV					y	
9055	PRV					y	
9056	L					y	

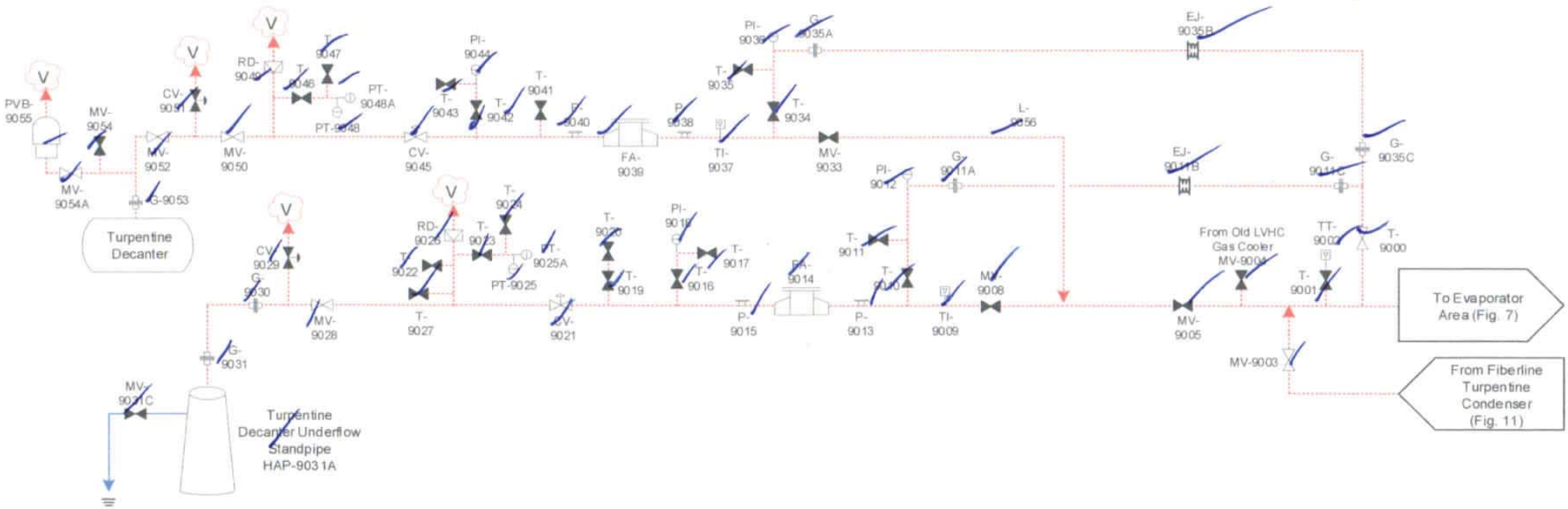

Vent Gases
Condensates
Liquor/Stock Lines
Process Lines

To Another Page and Indicated Equipment

From Another Page and Indicated Equipment

ENVIRONMENTAL 360

New-Indy – Catawba Mill

LDAR Inspection and Testing Diagrams
Turpentine Decanter and Standpipe

Rev. Date
January 2021

Figure 9

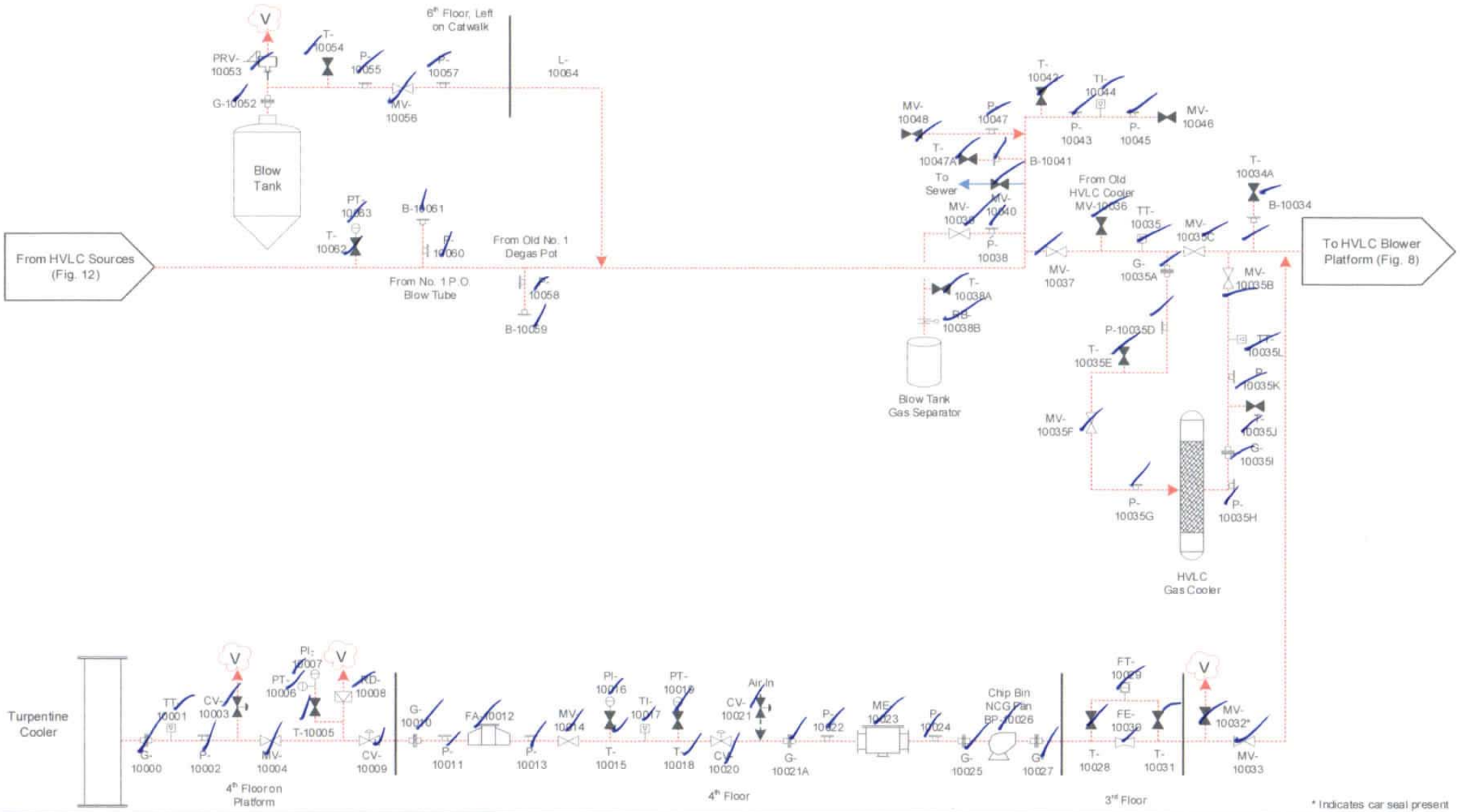

Vent Gases Condensates Liquor/Stock Lines Process Lines	To Another Page and Indicated Equipment From Another Page and Indicated Equipment	ENVIRONMENTAL 360	New-Indy – Catawba Mill LDAR Inspection and Testing Diagrams Turpentine Cooler and Blow Tank
			Rev. Date January 2021 Figure 10

Turpentine Cooler and Blow Tank

Completed Date/Time: 2/17/21

Number	Type	Equip. Number	Pressure (+/-)	Background	VOC Reading	Is Component Free of Leaks or Defects?	Comments
10000	G					Yes	
10001	TT	52-TE-230				Y	
10002	P					Y	
10003	CV	52-QV-937				Y	
10004	MV	52-MV-1021				Y	
10005	T					Y	
10006	PT	52-PSH-934				Y	
10007	PI					Y	
10008	RD					Y	
10009	CV	52-EV-938				Y	
10010	G					Y	
10011	P					Y	
10012	FA	M52-0429				Y	
10013	P					Y	
10014	MV	52-MV-1022				Y	
10015	T					Y	
10016	PI					Y	
10017	TI					Y	
10018	T					Y	
10019	PT					Y	
10020	CV	52-PV-941				Y	
10021	CV					Y	
10021A	G					Y	
10022	P					Y	
10023	ME	M52-0415				Y	
10024	P					Y	
10025	G					Y	
10026	BP	M52-0411				Y	
10027	G					Y	
10028	T					Y	
10029	FT					Y	
10030	FE					Y	
10031	T					Y	
10032	MV					Y	Car seal present.
10033	MV					Y	
10034	B					Y	
10034A	T					Y	
10035	TT	52-TT-947				Y	
10035A	G					Yes	
10035B	MV					Y	
10035C	MV					Y	
10035D	P					Y	
10035E	T					Y	
10035F	MV					Y	
10035G	P					Y	
10035H	P					Y	
10035I	G					Y	
10035J	T					Y	
10035K	P					Y	
10035L	TT					Y	
10036	MV					Y	
10037	MV					Y	
10038	P					Y	
10039	MV					Y	
10039A	T					Y	
10039B	RB					Y	
10040	MV					Y	
10041	B					Y	
10042	T					Y	
10043	P					Y	
10044	TI					Y	
10045	P					Y	
10046	MV					Y	
10047	P					Y	
10047A	T					Y	
10048	MV	A507				Y	
1052	G					Y	
1053	PRV					Y	
1054	T					Y	
1055	P					Y	
1056	MV					Y	
1057	P					Y	
1058	P					Y	
1059	B					Y	
1060	P					Y	
1061	B					Y	
1062	T					Y	
1063	PT	52-PT-215				Y	
1064	L					Y	

Turpentine Condenser and LVHC Gas Cooler

Completed Date/Time: 2/17/21

Number	Type	Equip. Number	Pressure (+/-)	Background	VOC Reading	Is Component Free of Leaks or Defects?	Comments
11000	RB					Yes	
11001	TT	52-TE-222A				Y	
11002	PI					Y	
11003	P					Y	
11004	G					Y	
11005	P					Y	
11006	P					Y	
11007	FA	M52-0512				Y	
11008	P					Y	
11008A	HAP					Y	
11009	P					Y	
11010	G					Y	
11011	P					Y	
11012	TT	52-TE-225				Y	
11013	CV	52-HV-174B				Y	
11014	MV	52-A-368				Y	
11015	T					Y	
11017	T					Y	
11018	PT	52-PSH-226				Y	
11019	RD					Y	
11020	P					Y	
11021	CV	52-HV-174A				Y	
11022	T	52-A-428				Y	
11023	T					Y	
11024	PI	52-PI-226				Y	
11025	FA	Z00-0395M				Y	
11026	P					Y	
11027	MV	52-A-541				Y	
11028	T	52-A-437				Y	
11029	L					Y	

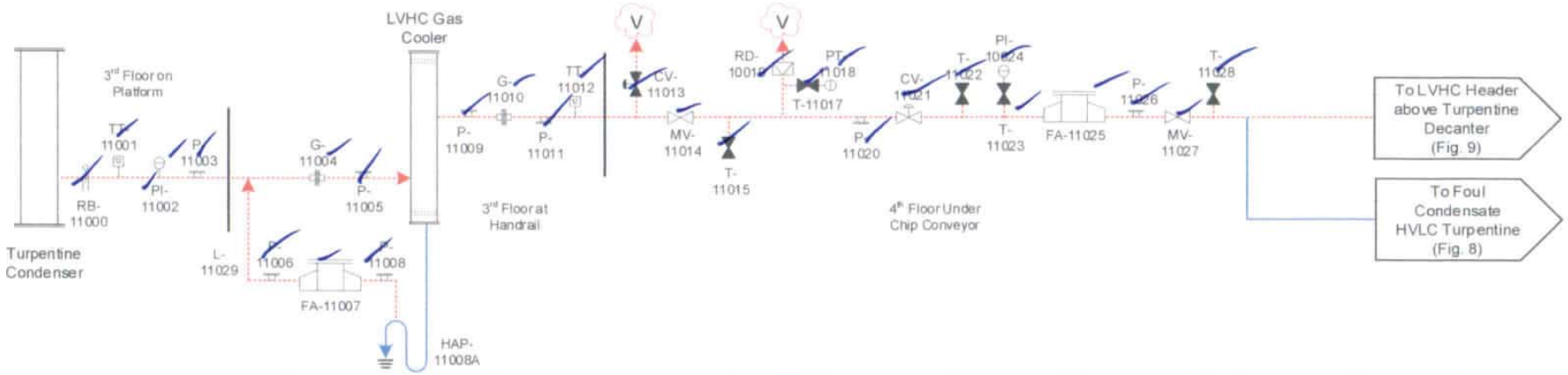

Vent Gases
Condensates
Liquor/Stock Lines
Process Lines

To Another Page and Indicated Equipment

From Another Page and Indicated Equipment

ENVIRONMENTAL 360

New-Indy – Catawba Mill

LDAR Inspection and Testing Diagrams
Turpentine Condenser and LVHC Gas Cooler

Rev. Date
January 2021

Figure 11

HVLC System at Pulp Mil (1 of 2)

Completed Date/Time: 2/17/21

Number	Type	Equip. Number	Pressure (+/-)	Background	VOC Reading	Is Component Free of Leaks or Defects?	Comments
12000	P					Y es	
12001	MV					Y	
12002	P					Y	
12003	T	X182				Y	
12004	G					Y	
12005	P					Y	
12006	MV					Y	
12015	P					Y	
12016	B					Y	
12020	T	V4454				Y	
12021	P					Y	
12022	MV	0598-22-HY				Y	
12023	P					Y	
12024	T	D060				Y	
12025	P					Y es	
12026	MV					Y	
12027	P					Y	
12028	T					Y	
12029	P					Y	
12030	MV	F543				Y	
12031	P					Y	
12032	T	F541				Y	
12033	G					Y	
12034	P					Y	
12035	MV	SR307				Y	
29039	P					Y	
29040	MV	SR308				Y	
29041	T					Y	
29042	P					Y	
29043	G					Y	
29044	L					Y	

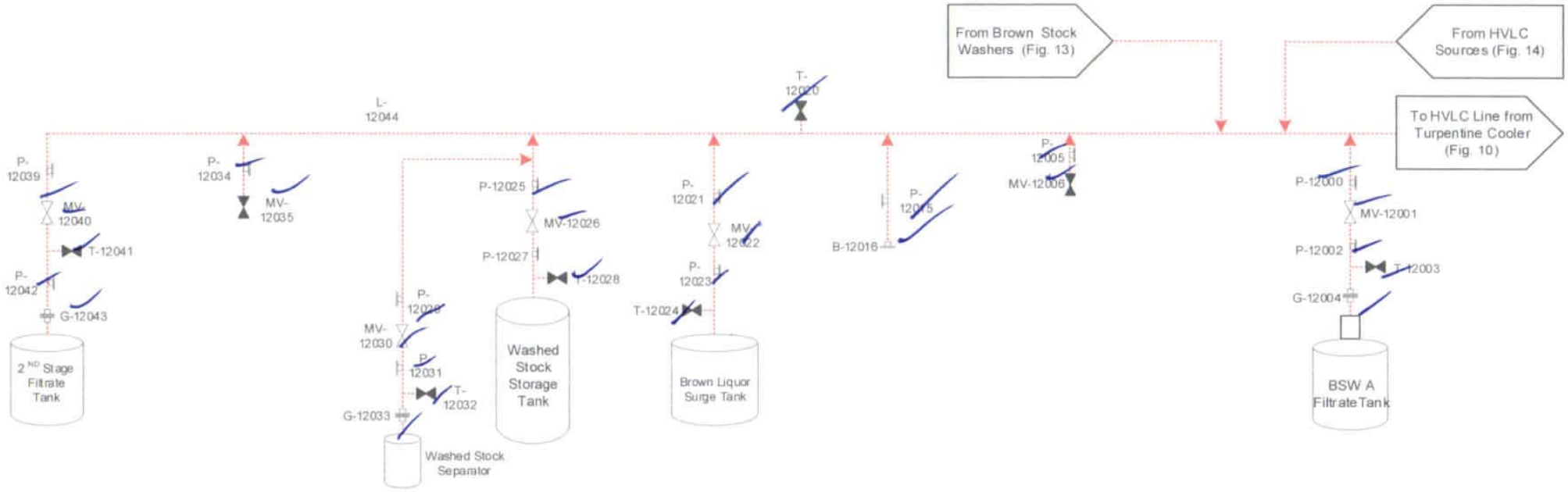

Vent Gases
Condensates
Liquor/Stock Lines
Process Lines

To Another Page and Indicated Equipment

From Another Page and Indicated Equipment

ENVIRONMENTAL 360

New-Indy – Catawba Mill

LDAR Inspection and Testing Diagrams
HVLC System at Pulp Mill (1 of 2)

Rev. Date
January 2021

Figure 12

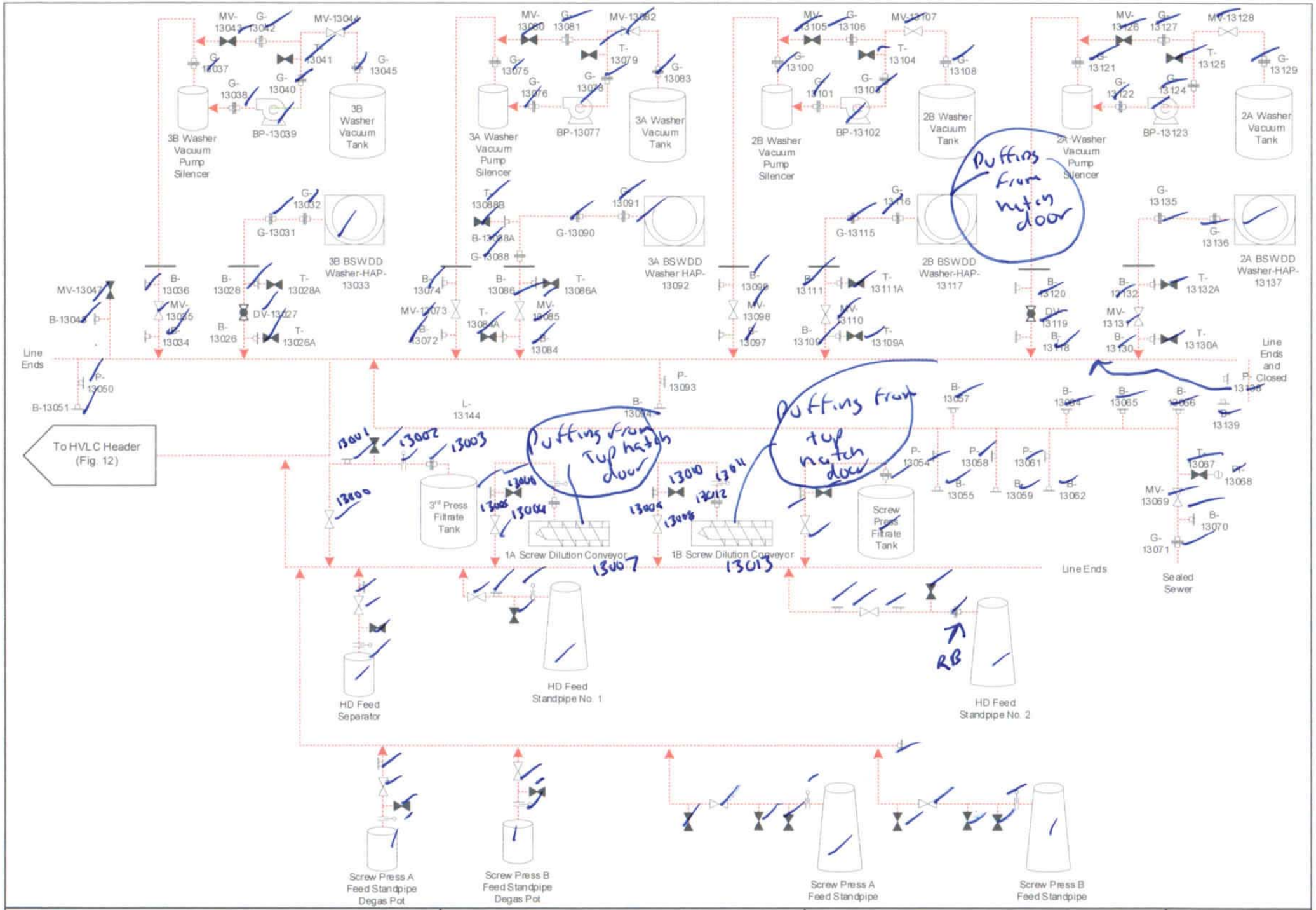

Vent Gases Bleach Gases Condensates Liquor/Stock Lines Process Lines	To Another Page and Indicated Equipment From Another Page and Indicated Equipment	ENVIRONMENTAL 360	New-Indy – Catawba Mill LDAR Inspection and Testing Diagrams Pulp Mill BSWs	Rev. Date January 2021 Figure 13

Bleach Plant
Completed Date/Time: 2/17/21

Number	Type	Equip. Number	Pressure (+/-)	Background	VOC Reading	Is Component Free of Leaks or Defects?	Comments
13026	B					yes	
13026A	T					y	
13027	DV					y	
13028	B					y	
13028A	T					y	
13031	G					y	
13032	G					y	
13033	HAP					y	
13034	B					y	
13035	MV	F532				y	
13036	B					y	
13037	G					y	
13038	G					y	
13039	BP	E53-0021				y	
13040	G					y	
13041	T	F56				y	
13042	G					y	
13043	MV	F99				y	
13044	MV					y	
13045	G					y	
13046	B					y	
13047	MV					y	
13050	P					y	
13051	B					y	
13054	P					y	
13055	B					y	
13057	B					y	
13058	P					y	
13059	B					y	
13061	P					y	
13062	B					y	
13064	B					y	
13065	B					y	
13066	B					y	
13067	T					y	
13068	PI					y	
13069	MV					y	
13070	B					y	
13071	G					y	
13072	B					y	
13073	MV	F530				y	
13074	B					y	
13075	G					y	
13076	G					y	
13077	BP	E53-0046				y	
13078	G					y	
13079	T	F195				y	
13080	MV	F101				y	
13081	G					y	
13082	MV					y	
13083	G					y	
13084	B					y	
13084A	T					y	
13085	MV	F529				y	
13086	B					y	
13086A	T					y	
13088	G					y	
13088A	B					y	
13088B	T					y	
13090	G					y	
13091	G					y	
13092	HAP					y	
13093	P					y	
13094	B	F528				yes	
13097	B					y	
13098	MV	F527				y	
13099	B					y	
13100	G					y	
13101	G					y	
13102	BP					y	
13103	G					y	
13104	T	F262				y	
13105	MV	F248				y	
13106	G					y	
13107	MV					y	
13108	G					y	
13109	B					y	
13109A	T					y	
13110	MV					y	
13111	B					y	
13111A	T					y	
13115	G					y	
13116	G					y	
13117	HAP					y	
13118	B					y	
13119	DV	F524				y	
13120	B					y	
13121	G					y	
13122	G					y	
13123	BP	E53-0106				y	
13124	G					y	
13125	T	F356				y	
13126	MV	F293				y	
13127	G					y	
13128	MV					y	
13129	G					y	
13130	B					y	
13130A	T					y	
13131	MV					y	
13132	B					y	
13132A	T					y	
13135	G					y	
13136	G					y	
13137	HAP					y	
13138	P					y	
13139	B					y	
13144	L					y	
13145	HAP					y	
13146	HAP					y	
13147	HAP					y	

HVLC System at Pulp Mil (2 of 2)

Completed Date/Time: 2/17/21

Number	Type	Equip. Number	Pressure (+/-)	Background	VOC Reading	Is Component Free of Leaks or Defects?	Comments
14000	P					Yes	
14001	MV	X170				Y	
14002	P					Y	
14003	T					Y	
14003A	PI	52-PI-353				Y	
14004	G					Y	
14005	G					Y	
14006	BP	M52-0092				Y	
14007	T	X74				Y	
14008	MV	X240				Y	
14009	MV					Y	
14010	G					Y	
14011	P					Y	
14012	MV	X169				Y	
14013	P					Y	
14014	T	X179				Y	
14015	PI					Y	
14016	G					Y	
14017	MV					Y	
14018	G					Y	
14019	HAP					Y	
14020	T					Y	
14021	MV					Y	
14023	P					Y	
14024	MV	X171				Y	
14025	P					Y	
14026	T					Y	
14027	G					Yes	
14027A	MV					Y	
14028	RB					Y	
14045	P					Y	
14046	T					Y	
14047	PI					Y	
14048	MV	X168				Y	
14049	P					Y	
14051	MV					Y	
14052	G					Y	
14053	HAP					Y	
14054	P					Y	
14055	MV	X167				Y	
14056	P					Y	
14057	T					Y	
14057A	PI					Y	
14058	G					Y	
14059	G					Y	
14060	BP	E52-0128				Y	
14061	T	X159				Y	
14062	MV	X265				Y	
14063	MV					Y	
14064	G					Y	
14065	P					Y	
14066	MV	SR313				Y	
14069	P					Y	
14070	MV	SR312				Y	
14077	P					Y	
14078	MV					Y	
14088	L					Y	

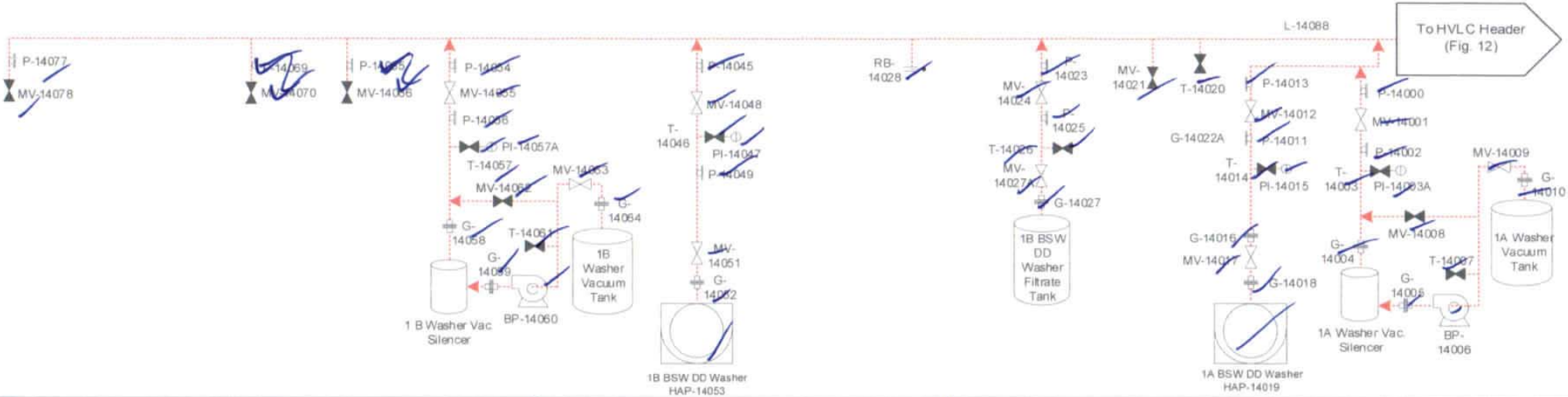

Vent Gases
Condensates
Liquor/Stock Lines
Process Lines

To Another Page and Indicated Equipment

From Another Page and Indicated Equipment

ENVIRONMENTAL 360

New-Indy – Catawba Mill

LDAR Inspection and Testing Diagrams
HVLC System at Pulp Mill (2 of 2)

Rev. Date
January 2021

Figure 14

Inspection Date: March 15, 2021

New Indy Containerboard - Catawba Mill
5300 Cureton Ferry Rd.
Catawba, SC 29704

2021 Monthly LDAR Inspection Summary Report

Table 1: Visual Inspection Summary Table

Equipment Number	Date	Description of Leak or Visual Defect
HAP-13092	3/15/2021	The 3A Brown Stock Washer is puffing from hatch door
HAP-13117	3/15/2021	The 2B Brown Stock Washer is puffing from hatch door.
HAP-14053	3/15/2021	The 1B Brown Stock Washer is puffing from hatch door.

First Attempt to Repair must be completed by:	5 Days from Inspection Date	Not Applicable if no leaks were found.
Repairs must be completed by:	15 Days from Inspection Date	Not Applicable if no leaks were found.

This report provides a summary of leaks and visual defects found during the visual inspection of the closed-vent and condensate-collection systems and complies with the record keeping requirements of 63.454(b)(1-2, 4-5).

The facility must initiate repairs to any defects within five (5) calendar days from this inspection and the defects must be repaired within fifteen (15) calendar days of the inspection. If the leak or defect requires the system to be shutdown in order to make repairs, or more emissions would occur from attempting the repair than delaying the repair, then the repairs may be delayed until the next process unit shutdown. A report must be supplied with the repair date and associated information, or the reason for the delay if the repairs are not completed within the 15-day period. These response requirements are specific to 40 CFR 63, specifically 63.453(k)(6), 63.453(l)(3), and 63.964(b)(1-2). Documentation of all repair attempts made and any leaks/defects requiring a process unit shutdown must be completed according to 63.454(b)(6-11).

I certify that the results of the visual inspection are accurate and complete to the best of my knowledge.

Inspector Name: Josh Howard

Signature: Josh Howard

ENVIRONMENTAL360

Inspection QA/QC Procedure

E360 Project Number?	New Indy Catawba
Task Number (if applicable)?	March 2021 Monthly LDAR

Purpose of Form

To verify field work meets each critical element.

Visual Work Flow (WF)

Step 1
R - Verify field work by checking "X" each WF No.

Verification of Critical Elements

WF No.	Requirement	Yes?
	Work-flow step	1
	Verifier of critical elements for work-flow step	R
1	Was a bump test performed on the personal H_2S monitor?	✓
2	Have the most recent versions of the inspection forms been used?	✓
3	Were all inspection points identified correctly and inspected correctly?	✓
4	Did the operator/ contact verify to our inspector that all equipment was operating under normal operating conditions?	✓
5	Were any deficiencies identified in person to the client?	✓
6	Were all inspection questions answered with either a Yes, No, or NA?	✓
7	Were inspections performed during the required regulatory time frame?	✓

Approvals

Role	WF Step	Name	Approval (insert date)
Responsible Person (R)	1	Josh Hler	03/15/2021

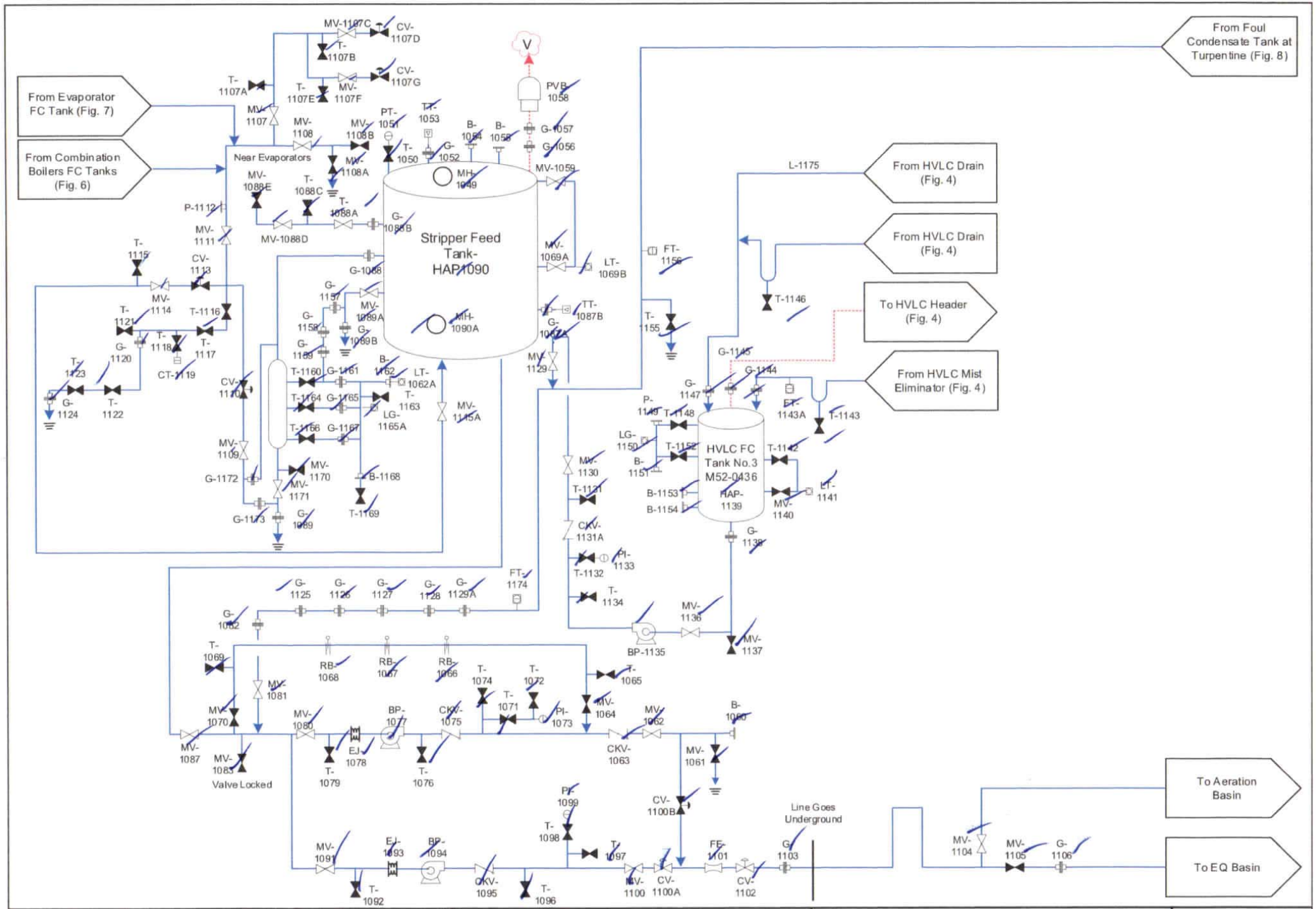

Vent Gases
Condensates
Liquor/Stock Lines
Process Lines

To Another Page and Indicated Equipment

From Another Page and Indicated Equipment

ENVIRONMENTAL 360

New-Indy – Catawba Mill

LDAR Inspection and Testing Diagrams
Stripper System Foul Condensate

Rev. Date
February 2021

Figure 1

Stripper System Foul Condensate

Completed Date/Time: 3/15/21

Number	Type	Equip. Number	Pressure (+/-)	Background	VOC Reading	Is Component Free of Leaks or Defects?	Comments
1049	MH					Yes	
1050	T					Y	
1051	PT					Y	
1052	G					Y	
1053	TT					Y	
1054	B					Y	
1055	B					Y	
1056	G					Y	
1057	G					Y	
1058	PVB					Y	
1059	MV					Y	
1060	B					Y	
1061	MV	24-MV-0361				Y	
1062	MV	24-MV-0359				Y	
1062A	LT					Y	
1063	CKV					Y	
1064	MV	24-MV-0445				Y	
1065	T					Y	
1066	RB					Y	
1067	RB					Y	
1068	RB					Y	
1069	T					Y	
1069A	MV					Y	
1069B	LT	51-LT-265				Y	
1070	MV	24-MV-445				Y	
1071	T					Y	
1072	T					Y	
1073	PI					Y	
1074	T					Y	
1075	CKV					Y	
1076	T					Y	
1077	BP					Y	
1078	EJ					Y	
1079	T					Y	
1080	MV	24-MV-363				Y	
1081	MV					Y	
1082	G					Y	
1083	MV	V704F				Y	
1087	MV	24-MV-362				Y	
1087A	G					Y	
1087B	TT	51-TT-266				Y	
1088	G					Y	
1088A	T					Y	
1088B	G					Y	
1088C	T					Y	
1088D	MV					Y	
1088E	MV					Y	
1089	G					Y	
1089A	MV	24-MV-0352				Y	
1089B	G					Y	
1090	HAP					Y	
1090A	MH					Y	
1091	MV	24-MV-0365				Y	
1092	T					Y	
1093	EJ					Y	
1094	BP					Y	
1095	CKV	V884F				Y	
1096	T					Y	
1097	T					Y	
1098	T					Y	
1099	PI					Y	
1100	MV	24-MV-360				Y	
1100A	CV					Y	
1100B	CV					Y	
1101	FE					Y	
1102	CV	51-FCV-267				Y	
1103	G					Y	
1104	MV					Y	
1105	MV					Y	
1106	G					Y	
1107	MV					Y	
1107A	T					Y	
1107B	T					Y	
1107C	MV					Y	
1107E	T					Yes	
1107F	MV					Y	
1107G	CV					Y	
1108	MV					Y	
1108A	MV					Y	
1108B	MV					Y	
1109	MV					Y	
1110	CV					Y	
1111	MV					Y	
1112	P					Y	
1113	CV					Y	
1114	MV					Y	
1115	T					Y	
1115A	MV					Y	
1116	T					Y	
1117	T					Y	
1118	T					Y	
1119	CT					Y	
1120	G					Y	
1121	T					Y	
1122	T					Y	
1123	T					Y	
1124	G					Y	
1125	G					Y	
1126	G					Y	
1127	G					Y	
1128	G					Y	
1129	MV					Y	
1129A	G					Y	
1130	MV					Y	
1131	T					Y	
1131A	CKV					Y	
1132	T					Y	
1133	PI					Y	
1134	T					Y	
1135	BP					Y	
1136	MV					Y	
1137	MV					Y	
1138	G					Y	
1139	HAP	M52-0436				Y	
1140	MV					Y	
1141	LT					Y	
1142	T					Y	
1143	T					Y	
1143A	FT					Y	
1144	G					Y	
1145	G					Y	
1146	T					Y	
1147	G					Y	
1148	T					Y	
1149	P					Y	
1150	LG					Y	
1151	B					Y	
1152	T					Y	
1153	B					Y	
1154	B					Y	
1155	T					Y	
1156	FT					Y	
1157	G					Y	
1158	G					Y	
1159	G					Y	
1160	T					Y	
1161	G					Y	
1162	B					Y	
1163	T					Y	
1164	T					Y	
1165	G					Y	
1165A	LG					Y	
1166	T					Y	
1167	G					Y	
1168	B					Y	
1169	T					Y	
1170	MV					Y	
1171	MV					Y	
1172	G					Y	
1173	G					Y	
1174	FT					Y	
1175	L					Y	

Stripper Feed Tank

Completed Date/Time: 3/15/21

Number	Type	Equip. Number	Pressure (+/-)	Background	VOC Reading	Is Component Free of Leaks or Defects?	Comments
2001	G					yes	
2002	T					y	
2003	MV					y	
2004	T					y	
2005	CV	51-PCV-264				y	
2006	CV	51-HV-262				y	
2007	MV	51-MV-0672				y	
2008	T					y	
2009	T					y	
2010	T					y	
2011	PT	51-PSH-261				y	
2011A	PT					y	
2012	RD					y	
2013	CV	51-HV-260				y	
2014	T	51-MV-0675				y	
2015	T					y	
2016	T					y	
2017	PI					y	
2018	P					y	
2019	FA	M51-0546				y	
2020	P					y	
2021	T					y	
2022	T					y	
2023	PI	51-PI-268B				y	
2024	TI	01-TI-274				y	
2025	MV	51-MV-0673				y	
2026	T	24-MV-0353				y	
2027	L					y	

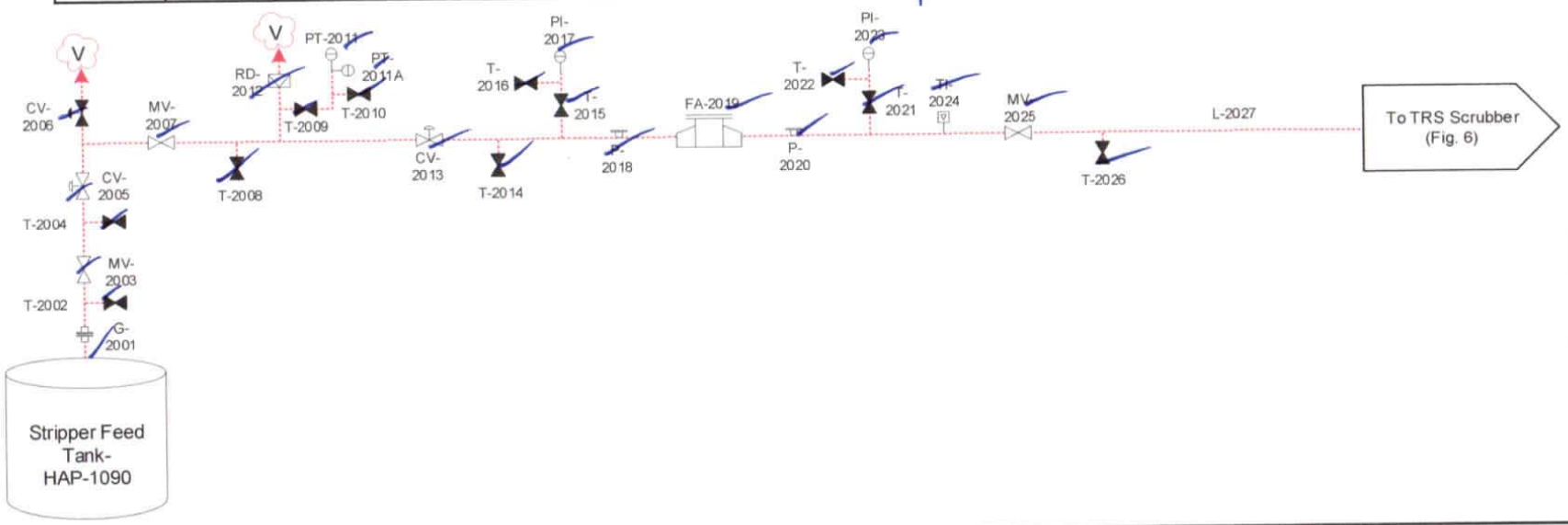

* Indicates car seal present

Vent Gases
Condensates
Liquor/Stock Lines
Process Lines

To Another Page and Indicated Equipment

From Another Page and Indicated Equipment

ENVIRONMENTAL360

New-Indy – Catawba Mill

LDAR Inspection and Testing Diagrams
Stripper Feed Tank

Rev. Date
February 2021

Figure 2

Combination Boiler HVLC Incinerator

Completed Date/Time: 3/15/21

Number	Type	Equip. Number	Pressure (+/-)	Background	VOC Reading	Is Component Free of Leaks or Defects?	Comments
4000	EJ					yes	
4001	MV	37-MV-0271				y	
4002	P					y	
4003	T					y	
4004	PI					y	
4005	FA					y	
4006	T					y	
4007	PI					y	
4008	G					y	
4009	TT					y	
4009A	P					y	
4010	EJ					y	
4011	MV	37-MV-0270				y	
4012	T					y	
4013	PI					y	
4014	FA					y	
4015	T					y	
4016	PI					y	
4017	EJ					y	
4018	TT					y	
4019	MV	26-MV-0628				y	
4020	T	BOP271				y	
4021	PI					y	
4022	FA	M52-0426				y	
4023	T	BOP270				y	
4024	PI	52-PI-930				yes	
4025	EJ					y	
4026	MV					y	
4027	P					y	
4028	T					y	
4029	PI					y	
4030	FA					y	
4031	T					y	
4032	PI					y	
4033	CV					y	
4034	MV	26-MV-0626				y	
4035	T					y	
4036	PT	52-PSH-960				y	
4037	MV	52-MV-0625				y	
4038	RD					y	
4039	MV					y	
4040	CV					y	
4041	CV					y	
4042	G					y	
4043	TT	52-TT-965				y	
4044	P					y	
4044A	P					y	
4045	G					y	
4046	G					y	
4047	P					y	
4048	ME					y	
4048A	G					y	
4049	P					y	
4050	G					y	
4051	L					y	

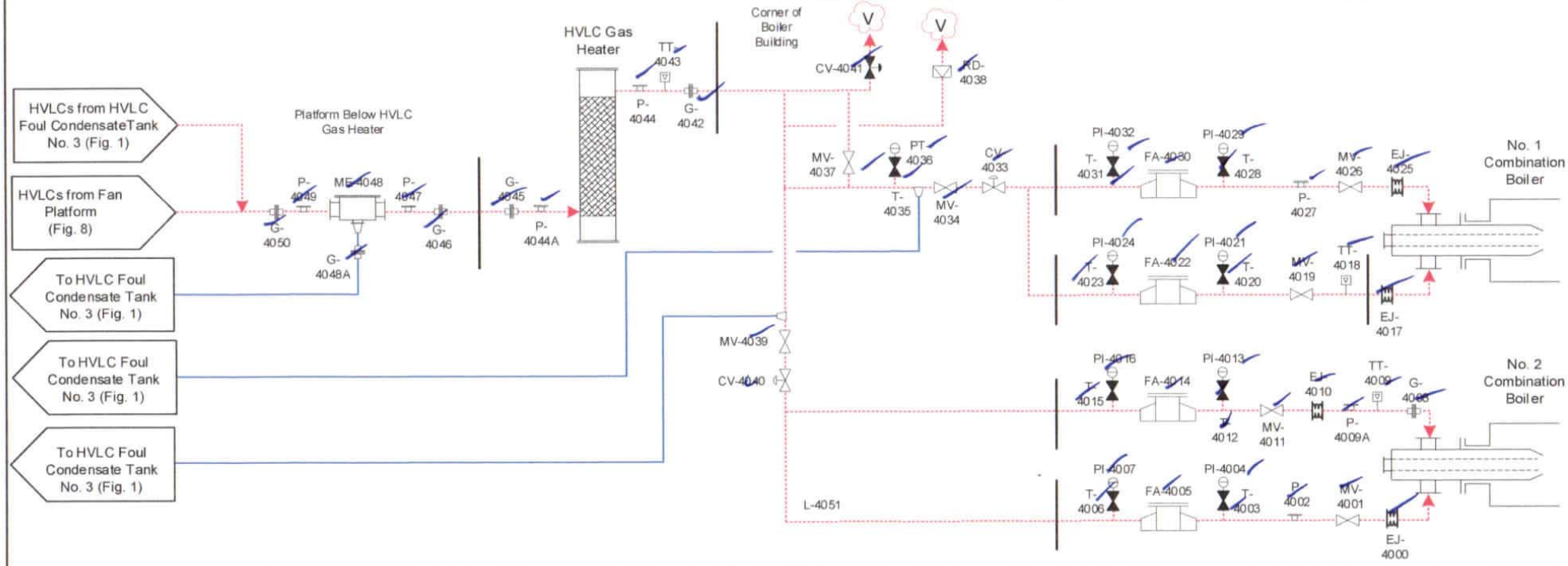

Vent Gases
Condensates
Liquor/Stock Lines
Process Lines

To Another Page and Indicated Equipment

From Another Page and Indicated Equipment

ENVIRONMENTAL 360

New-Indy – Catawba Mill

LDAR Inspection and Testing Diagrams

Combination Boiler HVLC Incineration

Rev. Date February 2021

Figure 4

Combination Boiler LVHC Incineration

Completed Date/Time: 3/15/21

Number	Type	Equip. Number	Pressure (+/-)	Background	VOC Reading	Is Component Free of Leaks or Defects?	Comments
5014	G					Yes	
5015	EJ					"	
5016	MV	37-MV-0313				"	
5017	T					"	
5018	PT	37-PT-385				"	
5019	TT	37-TT-384				"	
5020	P					"	
5021	FA					"	
5022	P					"	
5023	T					"	
5024	PT	37-PT-383				"	
5039	G					"	
5040	EJ					"	
5041	MV	26-MV-0532				"	
5042	T					"	
5043	PT	26-PT-377				"	
5044	TT					"	
5045	P					"	
5046	FA					"	
5047	P					"	
5048	T					"	
5049	PT	26-PT-375				"	
5050	L					"	

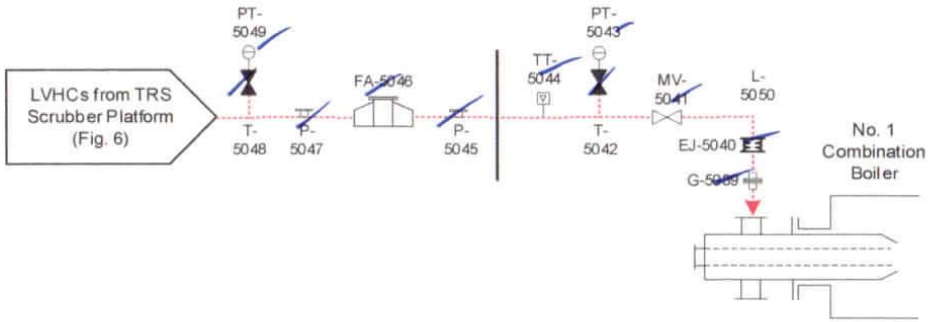

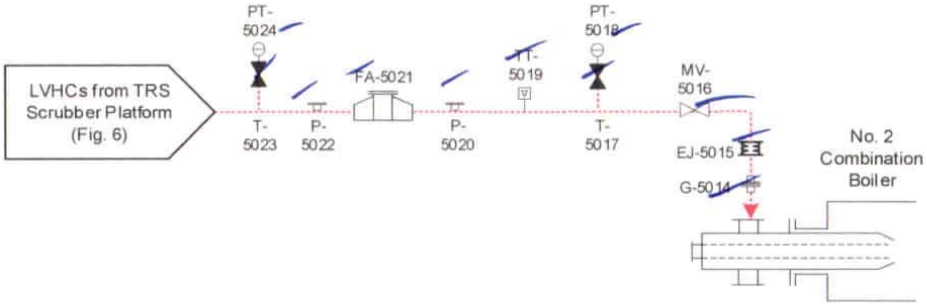

Vent Gases
Condensates
Liquor/Stock Lines
Process Lines

To Another Page and Indicated Equipment

From Another Page and Indicated Equipment

ENVIRONMENTAL 360

New-Indy – Catawba Mill

LDAR Inspection and Testing Diagrams

Combination Boiler LVHC Incineration

Rev. Date February 2021

Figure 5

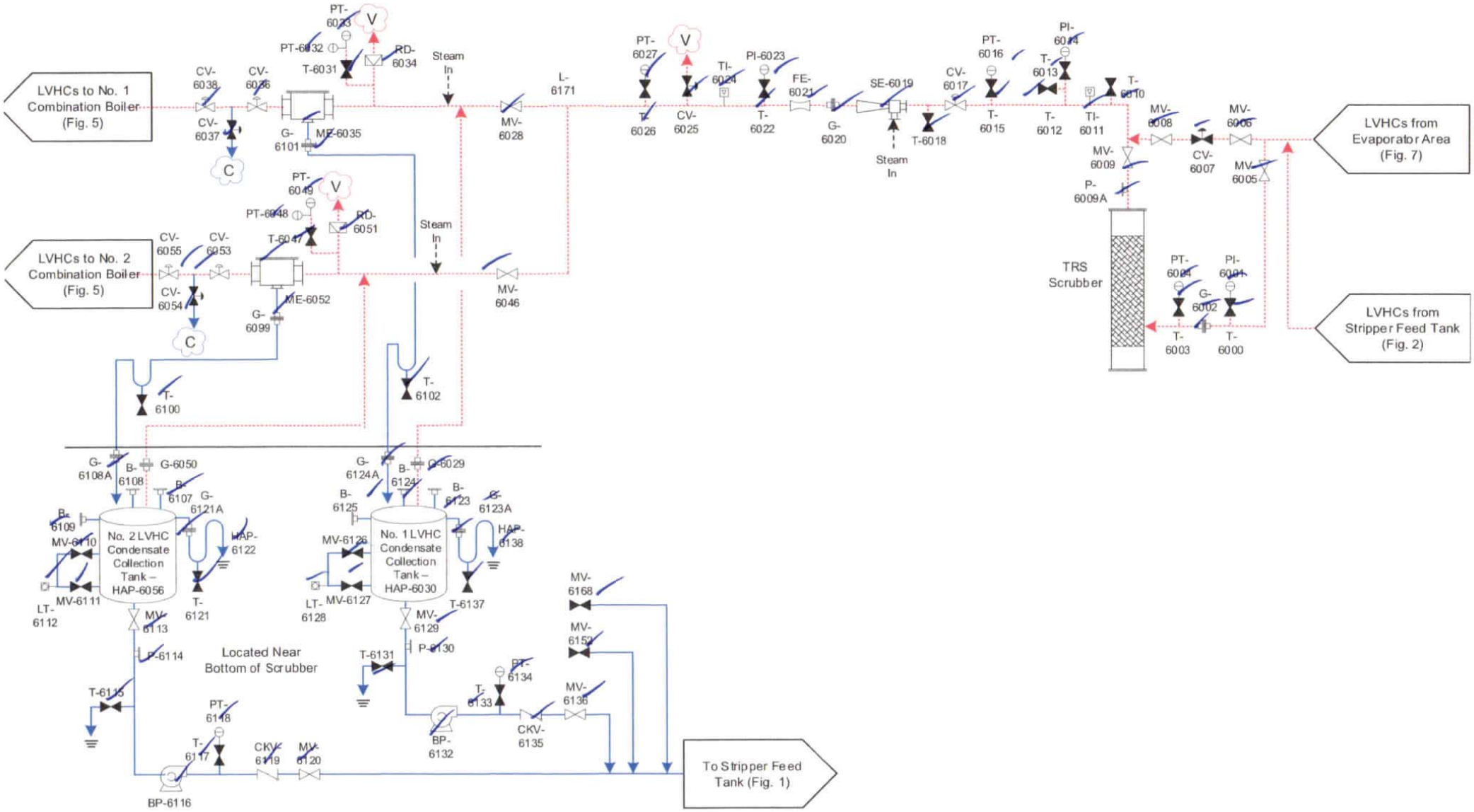

Vent Gases
Condensates
Liquor/Stock Lines
Process Lines

To Another Page and Indicated Equipment

From Another Page and Indicated Equipment

ENVIRONMENTAL360

New-Indy – Catawba Mill

LDAR Inspection and Testing Diagrams

TRS Scrubber Platform

Rev. Date February 2021

Figure 6

TRS Scrubber Platform

Completed Date/Time: 3/15/21

Number	Type	Equip. Number	Pressure (+/-)	Background	VOC Reading	Is Component Free of Leaks or Defects?	Comments
6000	T					Y es	
6001	PI					Y	
6002	G					Y	
6003	T					Y	
6004	PT					Y	
6005	MV	26-MV-0485				Y	
6006	MV	26-MV-0486				Y	
6007	CV	26-HV-364				Y	
6008	MV	26-MV-0575				Y	
6009	MV	26-MV-0507				Y	
6009A	P					Y	
6010	T					Y	
6011	TI					Y	
6012	T					Y	
6013	T					Y	
6014	PI					Y	
6015	T					Y	
6016	PT					Y	
6017	CV	26-PCV-365				Y	
6018	T					Y	
6019	SE					Y	
6020	G					Y	
6021	FE					Y	
6022	T					Y	
6023	PI					Y	
6024	TI					Y	
6025	CV					Y	
6026	T					Y	
6027	PT	26-PT-372				Y	
6028	MV					Y	
6029	G					Y	
6030	HAP					Y	
6031	T					Y	
6032	PT					Y	
6033	PT	26-PSH-373				Y	
6034	RD					Y	
6035	ME					Y	
6036	CV					Y	
6037	CV					Y	
6038	CV					Y	
6046	MV					Y	
6047	T					Y	
6048	PT	37-PSH-381				Y	
6049	PT					Y	
6050	G					Y	
6051	RD					Y es	
6052	ME					Y	
6053	CV	37-HV-382A				Y	
6054	CV	37-HV-043				Y	
6055	CV	37-HV-382B				Y	
6056	HAP					Y	
6099	G					Y	
6100	T					Y	
6101	G					Y	
6102	T					Y	
6107	B					Y	
6108	B					Y	
6108A	G					Y	
6109	B					Y	
6110	MV					Y	
6111	MV					Y	
6112	LT					Y	
6113	MV					Y	
6114	P					Y	
6115	T					Y	
6116	BP					Y	
6117	T					Y	
6118	PT					Y	
6119	CKV					Y	
6120	MV					Y	
6121	T					Y	
6121A	G					Y	
6122	HAP					Y	
6123	B					Y	
6123A	G					Y	
6124	B					Y	
6124A	G					Y	
6125	B					Y	
6126	MV					Y	
6127	MV					Y	
6128	LT					Y	
6129	MV					Y	
6130	P					Y	
6131	T					Y	
6132	BP					Y	
6133	T					Y	
6134	PT					Y	
6135	CKV					Y	
6136	MV					Y	
6137	T					Y	
6138	HAP					Y	
6152	MV					Y	
6168	MV					Y	
6171	L					Y	

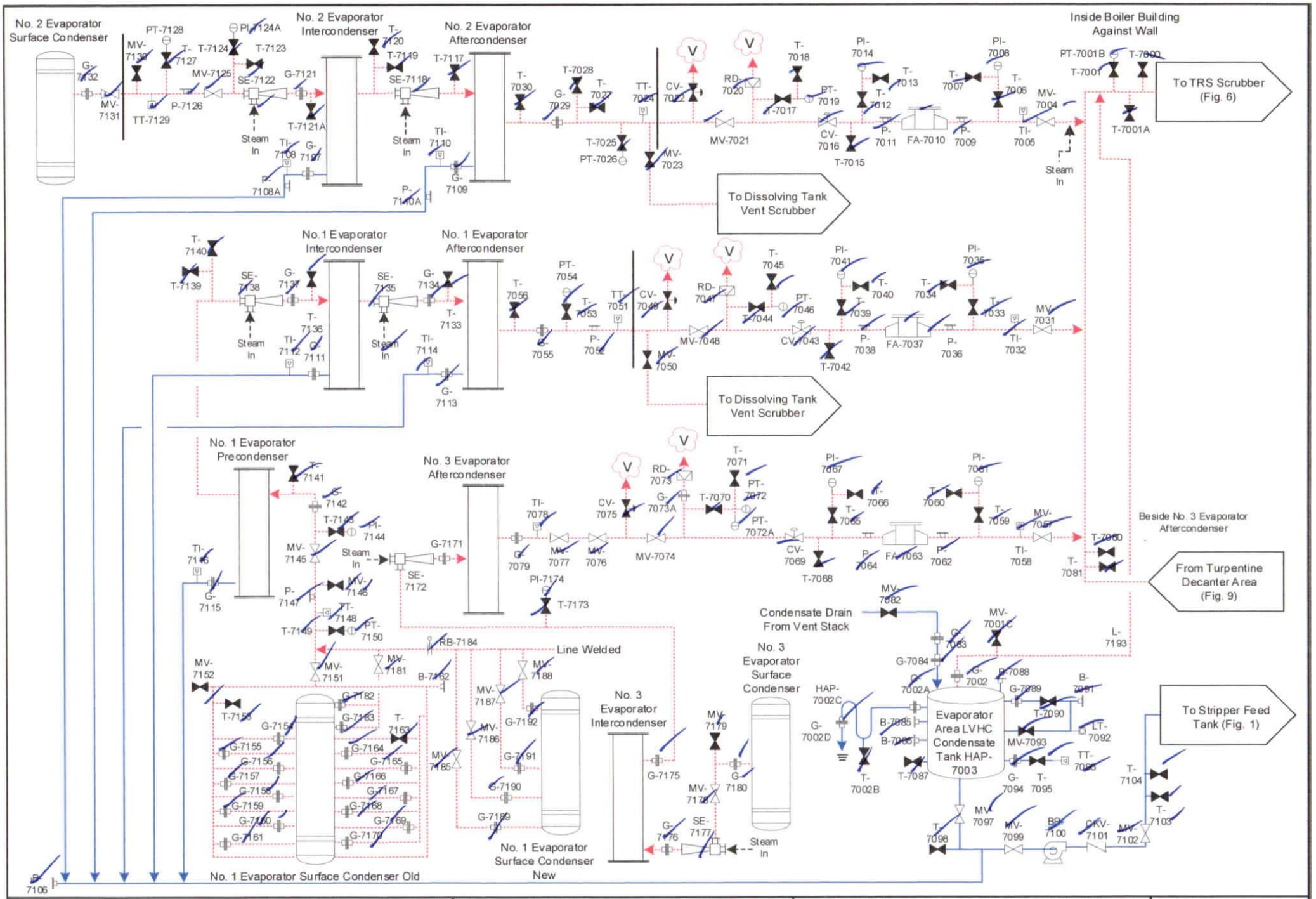

Vent Gases
Condensates
Liquor/Stock Lines
Process Lines

To Another Page and Indicated Equipment

From Another Page and Indicated Equipment

ENVIRONMENTAL 360

New-Indy – Catawba Mill

LDAR Inspection and Testing Diagrams

Evaporator System

Rev. Date February 2021

Figure 7

Evaporator System
Completed Date/Time: 3/15/21

Number	Type	Equip. Number	Pressure (+/-)	Background	VOC Reading	Is Component Free of Leaks or Defects?	Comments
7000	T					yes	
7001	T					y	
7001A	T					y	
7001B	PT					y	
7001C	MV					y	
7002	G					y	
7002A	G					y	
7002B	T					y	
7002C	HAP					y	
7002D	G					y	
7003	HAP					y	
7004	MV					y	
7005	TI					y	
7006	T					y	
7007	T					y	
7008	PI					y	
7009	P					y	
7010	FA					y	
7011	P					y	
7012	T					y	
7013	T					y	
7014	PI					y	
7015	T	24-MV-0380				y	
7016	CV	24-HV-334				y	
7017	T					y	
7018	T					y	
7019	PT					y	
7020	RD					y	
7021	MV	24-MV-0378				y	
7022	CV	24-HV-336				y	
7023	MV					y	
7024	TT	24-TE-358				y	
7025	T					y	
7026	PT	24-PT-357				y	
7027	T					y	
7028	T					y	
7029	G					y	
7030	T					y	
7031	MV	24-MV-0389				y	
7032	TI					y	
7033	T					y	
7034	T					y	
7035	PI					y	
7036	P					y	
7037	FA					y	
7038	P					y	
7039	T					y	
7040	T					y	
7041	PI					y	
7042	T	24-MV-0388				y	
7043	CV	24-HV-329				y	
7044	T					y	
7045	T					y	
7046	PT					y	
7047	RD					y	
7048	MV	24-MV-0387				y	
7049	CV	24-HV-331				y	
7050	MV					y	
7051	TT	24-TT-364				y	
7052	P					y	
7053	T					y	
7054	PT	24-PT-363				y	
7055	G					y	
7056	T					y	
7057	MV	51-MV-0660				y	
7058	TI					y	
7059	T					y	
7060	T					y	
7061	PI					y	
7062	P					y	
7063	FA					y	
7064	P					y	
7065	T					y	
7066	T					y	
7067	PI					y	
7068	T	51-MV-0659				y	
7069	CV	24-HV-339				y	
7070	T					y	
7071	T					y	
7072	PT					y	
7072A	PT					y	
7073	RD					y	
7073A	G					y	
7074	MV	51-MV-0658				y	
7075	CV	24-HV-341				y	
7076	MV	51-MV-0657				y	
7077	MV	51-MV-769				y	
7078	TI					y	
7079	G					y	
7080	T					y	
7081	T					y	
7082	MV					y	
7083	G					y	
7084	G					y	
7085	B					y	
7086	B					y	
7087	T					y	
7088	B					y	
7089	G					y	
7090	T					y	
7091	B					y	
7092	LT					yes	
7093	MV					y	
7094	G					y	
7095	T					y	
7096	TT					y	
7097	MV					y	
7098	T					y	
7099	MV					y	
7100	BP					y	
7101	CKV					y	
7102	MV					y	
7103	T					y	
7104	T					y	
7106	B					y	
7107	G					y	
7108	TI					y	
7108A	P					y	
7109	G					y	
7110	TI					y	
7110A	P					y	
7111	G					y	
7112	TI					y	
7113	G					y	
7114	TI					y	
7115	G					y	
7116	TI					y	
7117	T					y	
7118	SE					y	
7119	T					y	
7120	T					y	
7121	G					y	
7121A	T					y	
7122	SE					y	
7123	T					y	
7124	T					y	
7124A	PI					y	
7125	MV					y	
7126	P					y	
7127	T					y	
7128	PT					y	
7129	TT					y	
7130	MV					y	
7131	MV					y	
7132	G					y	
7133	T					y	
7134	G					y	
7135	SE					y	
7136	T					y	
7137	G					y	
7138	SE					y	
7139	T					y	
7140	T					y	
7141	T					y	
7142	G					y	
7143	T					y	
7144	PI					y	
7145	MV					y	
7146	MV					y	
7147	P					y	
7148	TT					y	
7149	T					y	
7150	PT					y	
7151	MV					y	
7152	MV	24-MV-0399				y	
7153	T					y	
7154	G					y	
7155	G					y	
7156	G					y	
7157	G					y	
7158	G					y	
7159	G					y	
7160	G					y	
7161	G					y	
7162	B					y	
7163	T					y	
7164	G					y	
7165	G					y	
7166	G					y	
7167	G					y	
7168	G					y	
7169	G					y	
7170	G					y	
7171	G					y	
7172	SE					y	
7173	T	51-MV-0774				y	
7174	PI					y	
7175	G					y	
7176	G					y	
7177	SE					y	
7178	MV	51-MV-0783				y	
7179	MV	51-MV-0782				y	
7180	G					y	
7181	MV					y	
7182	G					y	
7183	G					y	
7184	RB					y	
7185	MV					y	
7186	MV					y	
7187	MV					y	
7188	MV					y	
7189	G					y	
7190	G					y	
7191	G					y	
7192	G					y	
7193	L					y	

HVLC Blower Platform
Completed Date/Time: 3/15/21

Number	Type	Equip. Number	Pressure (+/-)	Background	VOC Reading	Is Component Free of Leaks or Defects?	Comments
8000	B					Yes	
8001	T					Y	
8002	MV					Y	
8003	P					Y	
8004	G					Y	
8005	T					Y	
8006	MV					Y	
8007	T					Y	
8008	G					Y	
8009	T					Y	
8010	PI					Y	
8011	TI					Y	
8012	T					Y	
8013	TT					Y	
8014	CV	54-PV-953				Y	
8015	MV	26-MV-0618				Y	
8016	CV					Y	
8017	T	26-MV-0619				Y	
8018	G					Y	
8019	P					Y	
8020	ME					Y	
8021	T					Y	
8022	G					Y	
8023	G					Y	
8024	BP	M52-0412				Y	
8025	G					Y	
8026	T					Y	
8027	PI	52-PI-958				Y	
8028	TI					Y	
8029	MV	26-MV-0670				Y	
8030	MV					Y	Car seal present.
8031	MV					Y	
8032	G					Y	
8033	BP	M52				Y	
8034	G					Y	
8035	MV	26-MV-0622				Y	
8036	T					Y	
8037	T					Y	
8038	FT					Y	
8039	FE					Y	
8040	T					Y	
8041	T					Yes	
8042	MV					Y	
8043	FT					Y	
8044	FT					Y	
8045	FT					Y	
8045A	MV					Y	
8046	T					Y	
8047	MV					Y	
8048	T					Y	
8049	PI					Y	
8050	G					Y	
8051	BP					Y	
8052	MV					Y	
8053	G					Y	
8054	MV					Y	
8055	G					Y	
8056	HAP					Y	
8057	HAP					Y	
8058	T					Y	
8059	T					Y	
8060	T					Y	
8060A	FT					Y	
8060B	G					Y	
8061	G					Y	
8062	G					Y	
8063	G					Y	
8063A	G					Y	
8063B	G					Y	
8064	G					Y	
8065	G					Y	
8065A	G					Y	
8066	G					Y	
8066A	G					Y	
8067	G					Y	
8068	T					Y	
8069	B					Y	
8070	T					Y	
8071	MV					Y	
8072	LT					Y	
8073	T					Y	
8074	P					Y	
8075	LG					Y	
8076	B					Y	
8077	T					Y	
8078	L					Y	

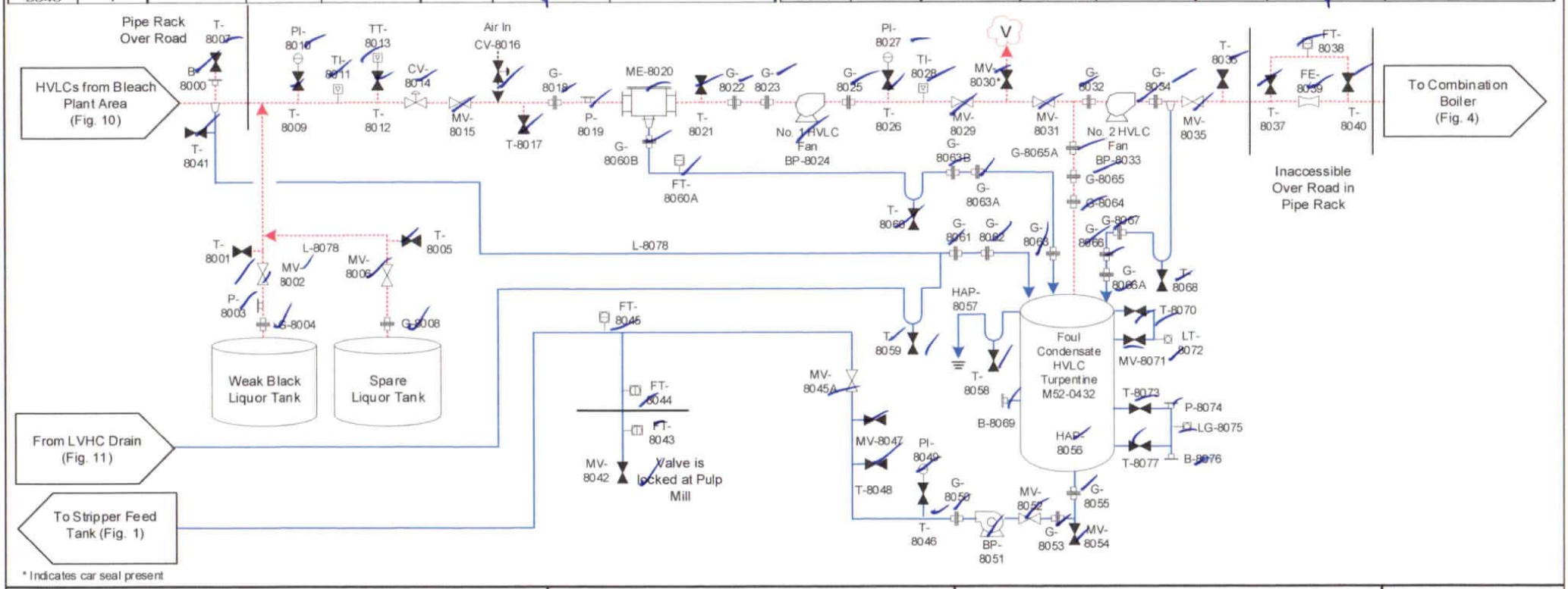

Vent Gases
Condensates
Liquor/Stock Lines
Process Lines

To Another Page and Indicated Equipment
From Another Page and Indicated Equipment

ENVIRONMENTAL 360

New-Indy – Catawba Mill

LDAR Inspection and Testing Diagrams
HVLC Blower Platform

Rev. Date
February 2021

Figure 8

Turpentine Decanter and Standpipe

Completed Date/Time: 3/15/21

Number	Type	Equip. Number	Pressure (+/-)	Background	VOC Reading	Is Component Free of Leaks or Defects?	Comments
9000	T					Y es	
9001	T					Y Y	
9002	TT					Y Y	
9003	MV	14-MV-0312				Y Y	
9004	MV					Y Y	
9005	MV					Y Y	
9008	MV	14-TI/TW-125				Y Y	
9009	TI					Y Y	
9010	T					Y Y	
9011	T					Y Y	
9011A	G					Y Y	
9011B	EJ					Y Y	
9011C	G					Y Y	
9012	PI					Y Y	
9013	P					Y Y	
9014	FA					Y Y	
9015	P					Y	
9016	T					Y Y	
9017	T					Y Y	
9018	PI	14-PI-125A				Y Y	
9019	T					Y Y	
9020	T					Y Y	
9021	CV	14-HV-127				Y Y	
9022	T					Y Y	
9023	T					Y Y	
9024	T					Y Y	
9025	PT	14-PSH-122				Y Y	
9025A	PT	14-PSH-122				Y Y	
9026	RD					Y Y	
9027	T					Y Y	
9028	MV					Y Y	
9029	CV	14-HV-126				Y es	
9030	G					Y Y	
9031	G					Y Y	
9031A	HAP					Y Y	
9031C	MV					Y Y	
9033	MV	14-MV-0330				Y Y	
9034	T					Y Y	
9035	T					Y Y	
9035A	G					Y Y	
9035B	EJ					Y Y	
9035C	G					Y Y	
9036	PI					Y Y	
9037	TI	14-TI/TW-304B				Y Y	
9038	P					Y Y	
9039	FA	M14-0121				Y Y	
9040	P					Y Y	
9041	T					Y Y	
9042	T					Y Y	
9043	T					Y Y	
9044	PI					Y Y	
9045	CV	14-HV-314				Y Y	
9046	T					Y Y	
9047	T					Y Y	
9048	PT	14-PSH-313				Y Y	
9048A	PT	14-PSH-313				Y Y	
9049	RD					Y Y	
9050	MV	14-MV-0342				Y Y	
9051	CV	14-HV-312				Y Y	
9052	MV	14-MV-0343				Y Y	
9053	G					Y Y	
9054	MV					Y Y	
9054A	MV					Y Y	
9055	PRV					Y Y	
9056	L					Y Y	

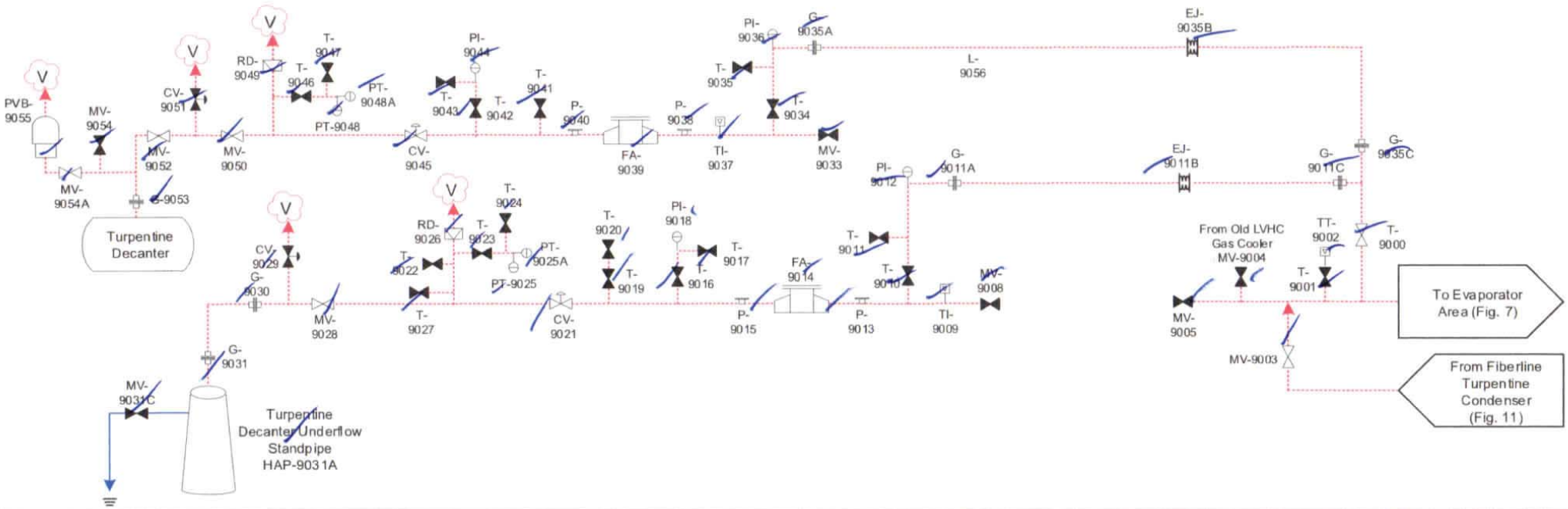

Vent Gases
Condensates
Liquor/Stock Lines
Process Lines

To Another Page and Indicated Equipment

From Another Page and Indicated Equipment

ENVIRONMENTAL 360

New-Indy – Catawba Mill

LDAR Inspection and Testing Diagrams
Turpentine Decanter and Standpipe

Rev. Date
February 2021

Figure 9

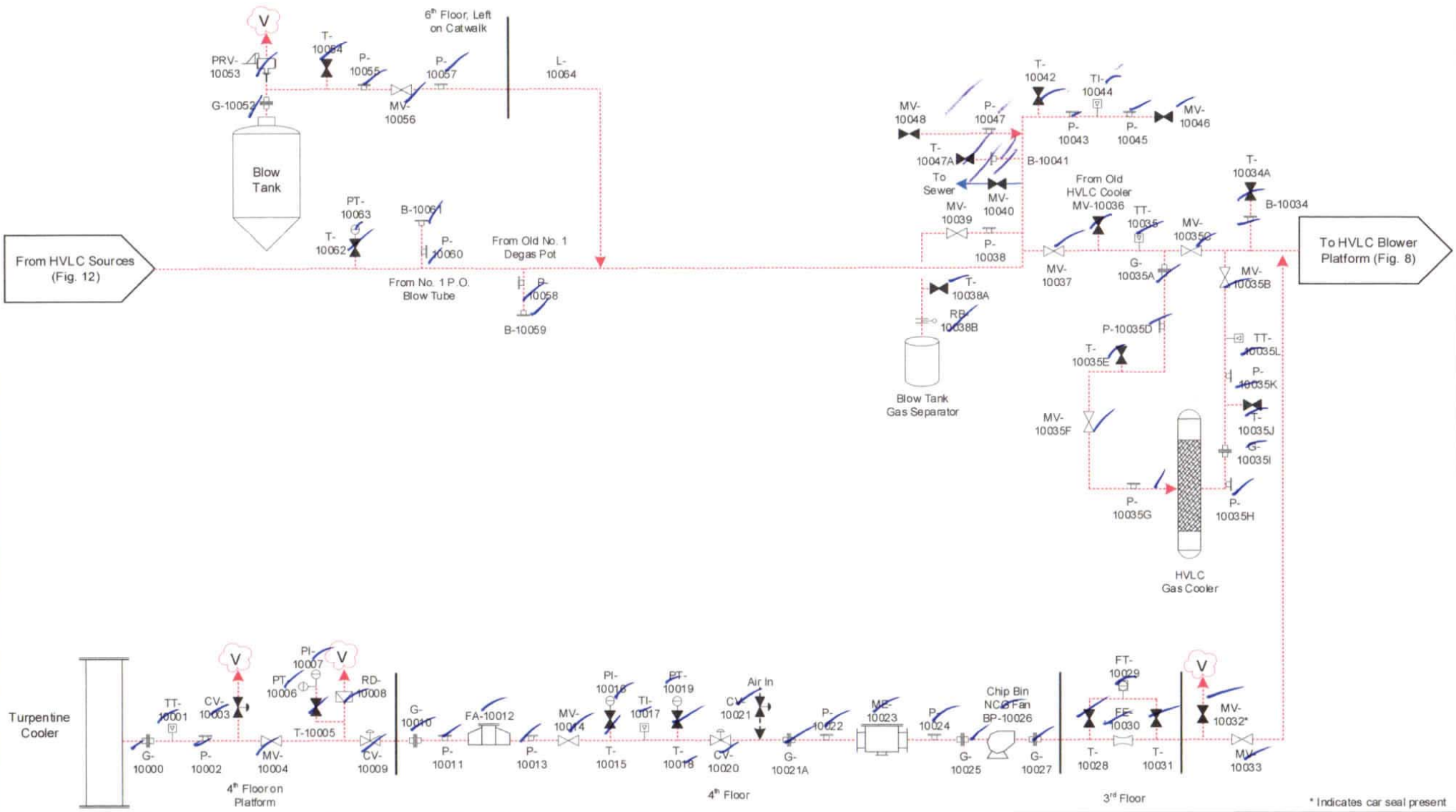

Vent Gases Condensates Liquor/Stock Lines Process Lines	To Another Page and Indicated Equipment From Another Page and Indicated Equipment	ENVIRONMENTAL 360	New-Indy – Catawba Mill LDAR Inspection and Testing Diagrams Turpentine Cooler and Blow Tank	Rev. Date February 2021 Figure 10

Turpentine Cooler and Blow Tank

Completed Date/Time: 3/15/21

Number	Type	Equip. Number	Pressure (+/-)	Background	VOC Reading	Is Component Free of Leaks or Defects?	Comments
10000	G					Y/es	
10001	TT	52-TE-230				Y	
10002	P					Y	
10003	CV	52-QV-937				Y	
10004	MV	52-MV-1021				Y	
10005	T					Y	
10006	PT	52-PSH-934				Y	
10007	PI					Y	
10008	RD					Y	
10009	CV	52-EV-938				Y	
10010	G					Y	
10011	P					Y	
10012	FA	M52-0429				Y	
10013	P					Y	
10014	MV	52-MV-1022				Y	
10015	T					Y	
10016	PI					Y	
10017	TI					Y	
10018	T					Y	
10019	PT					Y	
10020	CV	52-PV-941				Y	
10021	CV					Y	
10021A	G					Y	
10022	P					Y	
10023	ME	M52-0415				Y	
10024	P					Y	
10025	G					Y	
10026	BP	M52-0411				Y	
10027	G					Y	
10028	T					Y	
10029	FT					Y	
10030	FE					Y	
10031	T					Y	
10032	MV					Y	Car seal present.
10033	MV					Y	
10034	B					Y	
10034A	T					Y	
10035	TT	52-TT-947				Y	
10035A	G					Y	
10035B	MV					Y	
10035C	MV					Y	
10035D	P					Y	
10035E	T					Y	
10035F	MV					Y	
10035G	P					Y	
10035H	P					Y	
10035I	G					Y	
10035J	T					Y	
10035K	P					Y	
10035L	TT					Y	
10036	MV					Y	
10037	MV					Y	
10038	P					Y	
10038A	T					Y	
10038B	RB					Y	
10039	MV					Y	
10040	MV					Y	
10041	B					Y	
10042	T					Y	
10043	P					Y	
10044	TI					Y	
10045	P					Y	
10046	MV					Y	
10047	P					Y	
10047A	T					Y	
10048	MV	A507				Y	
10052	G					Y	
10053	PRV					Y	
10054	T					Y	
10055	P					Y	
10056	MV					Y	
10057	P					Y	
10058	P					Y	
10059	B					Y	
10060	P					Y	
10061	B					Y	
10062	T					Y	
10063	PT	52-PT-215				Y	
10064	L					Y	

Turpentine Condenser and LVHC Gas Cooler

Completed Date/Time: 3/15/21

Number	Type	Equip. Number	Pressure (+/-)	Background	VOC Reading	Is Component Free of Leaks or Defects?	Comments
11000	RB					Y es	
11001	TT	52-TE-222A				Y	
11002	PI					Y	
11003	P					Y	
11004	G					Y	
11005	P					Y	
11006	P					Y	
11007	FA	M52-0512				Y	
11008	P					Y	
11008A	HAP					Y	
11009	P					Y	
11010	G					Y	
11011	P					Y	
11012	TT	52-TE-225				Y	
11013	CV	52-HV-174B				Y	
11014	MV	52-A-368				Y	
11015	T					Y	
11017	T					Y	
11018	PT	52-PSH-226				Y	
11019	RD					Y	
11020	P					Y	
11021	CV	52-HV-174A				Y	
11022	T	52-A-428				Y	
11023	T					Y	
11024	PI	52-PI-226				Y	
11025	FA	Z00-0395M				Y	
11026	P					Y	
11027	MV	52-A-541				Y	
11028	T	52-A-437				Y	
11029	L					Y	

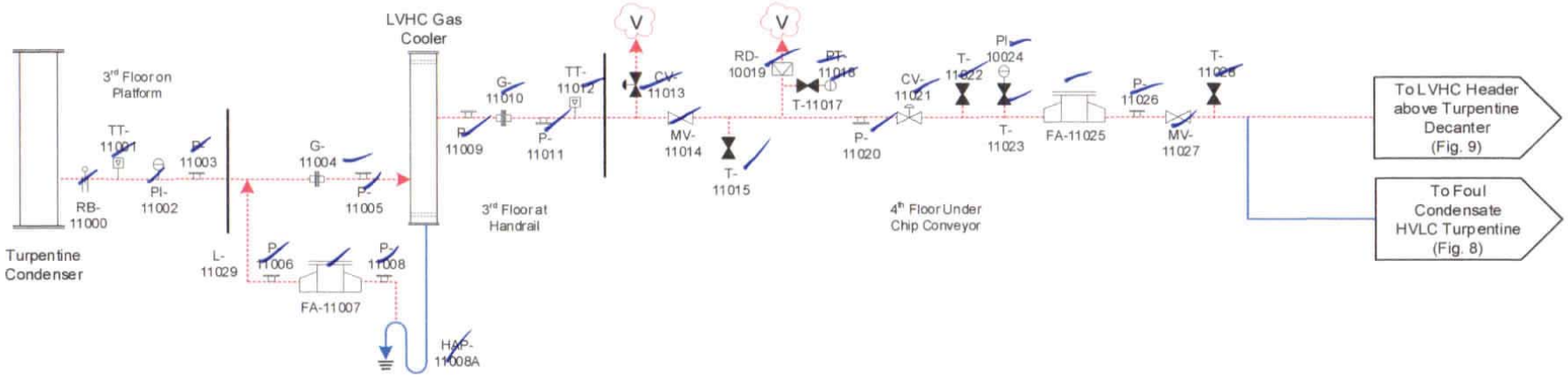

Vent Gases
Condensates
Liquor/Stock Lines
Process Lines

To Another Page and Indicated Equipment

From Another Page and Indicated Equipment

ENVIRONMENTAL 360

New-Indy – Catawba Mill

LDAR Inspection and Testing Diagrams
Turpentine Condenser and LVHC Gas Cooler

Rev. Date
February 2021

Figure 11

HVLC System at Pulp Mil (1 of 2)

Completed Date/Time: 3/15/21

Number	Type	Equip. Number	Pressure (+/-)	Background	VOC Reading	Is Component Free of Leaks or Defects?	Comments
12000	P					yes	
12001	MV					y	
12002	P					y	
12003	T	X182				y	
12004	G					y	
12005	P					y	
12006	MV					y	
12015	P					y	
12016	B					y	
12020	T	V4454				y	
12021	P					y	
12022	MV	0598-22-HY				y	
12023	P					y	
12024	T	D060				y	
12025	P					yes	
12026	MV					y	
12027	P					y	
12028	T					y	
12029	P					y	
12030	MV	F543				y	
12031	P					y	
12032	T	F541				y	
12033	G					y	
12034	P					y	
12035	MV	SR307				y	
12039	P					y	
12040	MV	SR308				y	
12041	T					y	
12042	P					y	
12043	G					y	
12044	L					y	

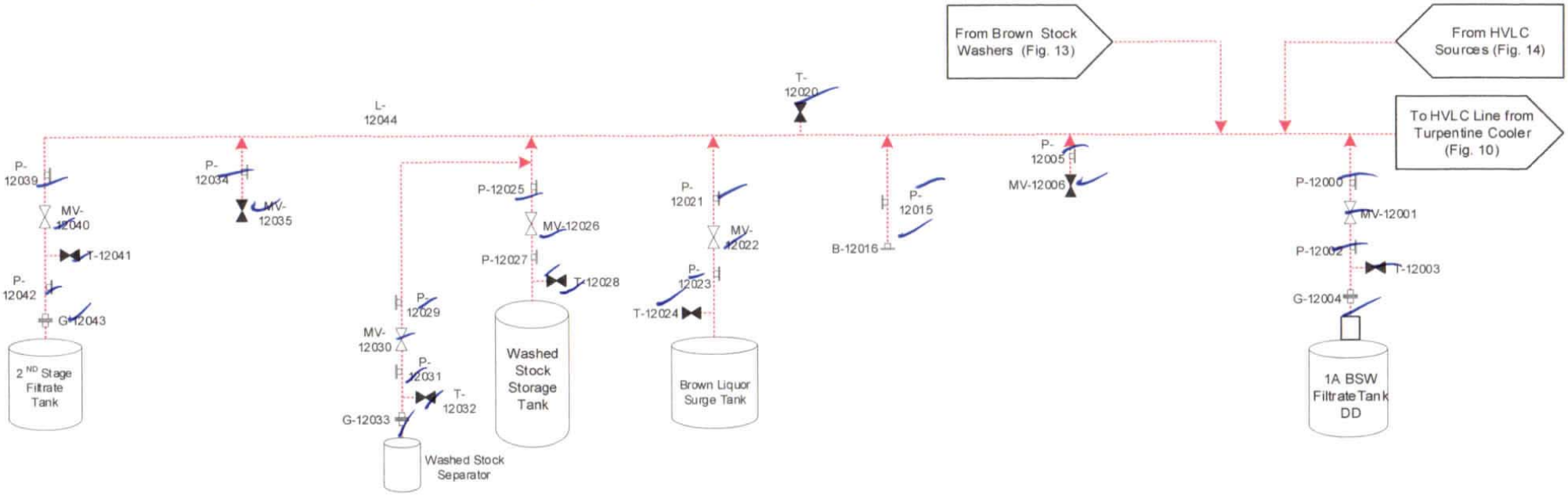

Vent Gases
Condensates
Liquor/Stock Lines
Process Lines

To Another Page and Indicated Equipment

From Another Page and Indicated Equipment

ENVIRONMENTAL 360

New-Indy – Catawba Mill

LDAR Inspection and Testing Diagrams
HVLC System at Pulp Mill (1 of 2)

Rev. Date February 2021

Figure 12

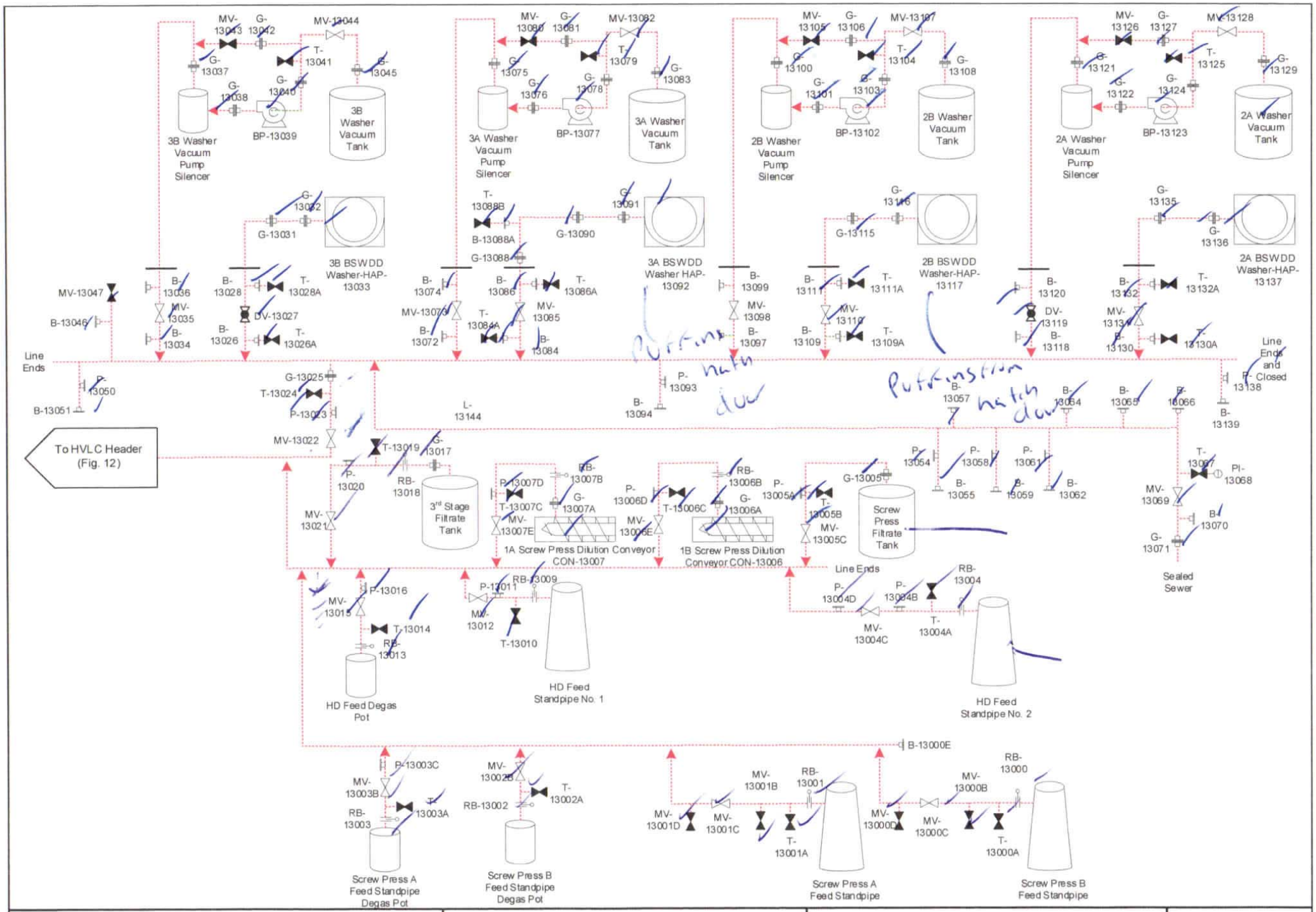

Vent Gases
Bleach Gases
Condensates
Liquor/Stock Lines
Process Lines

To Another Page and Indicated Equipment

From Another Page and Indicated Equipment

ENVIRONMENTAL360

New-Indy – Catawba Mill

LDAR Inspection and Testing Diagrams
Pulp Mill BSWs

Rev. Date
February 2021

Figure 13

Pulp Mill BSWs
Completed Date/Time: 3/15/21

Number	Type	Equip. Number	Pressure (+/-)	Background	VOC Reading	Is Component Free of Leaks or Defects?	Comments
13000	RB					Yes	
13000A	T					Y	
13000B	MV					Y	
13000C	MV					Y	
13000D	MV					Y	
13000E	B					Y	
13001	RB					Y	
13001A	T					Y	
13001B	MV					Y	
13001C	MV					Y	
13001D	MV					Y	
13002	RB					Y	
13002A	T					Y	
13002B	MV					Y	
13003	RB					Y	
13003A	T					Y	
13003B	MV					Y	
13003C	P					Y	
13004	RB					Y	
13004A	T					Y	
13004B	P					Y	
13004C	MV					Y	
13004D	P					Y	
13005	G					Y	
13005A	P					Y	
13005B	T					Y	
13005C	MV					Y	
13006	CON					Y	
13006A	G					Y	
13006B	RB					Y	
13006C	T					Y	
13006D	P					Y	
13006E	MV					Y	
13007	CON					Y	
13007A	A					Y	
13007B	RB					Y	
13007C	T					Y	
13007D	P					Y	
13007E	MV					Y	
13009	RB					Y	
13010	T					Y	
13011	P					Y	
13012	MV					Y	
13013	RB					Y	
13014	T					Y	
13015	MV					Y	
13016	P					Y	
13017	G					Y	
13018	RB					Y	
13019	T					Y	
13020	P					Y	
13021	MV					Y	
13022	MV					Y	
13023	P					Y	
13024	T					Y	
13025	G					Y	
13026	B					Y	
13026A	T					Y	
13027	DV					Y	
13028	B					Y	
13028A	T					Y	
13031	G					Y	
13032	G					Y	
13033	HAP					Y	
13034	B					Y	
13035	MV	F532				Y	
13036	B					Y	
13037	G					Y	
13038	G					Y	
13039	BP	E53-0021				Y	
13040	G					Y	
13041	T	F56				Y	
13042	G					Y	
13043	MV	F99				Y	
13044	MV					Y	
13045	G					Y	
13046	B					Y	
13047	MV					Y	
13050	P					Y	
13051	B					Y	
13054	P					Yes	
13055	B					Y	
13057	B					Y	
13058	P					Y	
13059	B					Y	
13061	P					Y	
13062	B					Y	
13064	B					Y	
13065	B					Y	
13066	B					Y	
13067	T					Y	
13068	PI					Y	
13069	MV					Y	
13070	B					Y	
13071	G					Y	
13072	B					Y	
13073	MV	F530				Y	
13074	B					Y	
13075	G					Y	
13076	G					Y	
13077	BP	E53-0046				Y	
13078	G					Y	
13079	T	F195				Y	
13080	MV	F101				Y	
13081	G					Y	
13082	MV					Y	
13083	G					Y	
13084	B					Y	
13084A	T					Y	
13085	MV	F529				Y	
13086	B					Y	
13086A	T					Y	
13088	G					Y	
13088A	B					Y	
13088B	T					Y	
13090	G					Y	
13091	G					Y	
13092	HAP					NO	Puffing
13093	P					Y	
13094	B	F528				Y	
13097	B					Y	
13098	MV	F527				Y	
13099	B					Y	
13100	G					Y	
13101	G					Y	
13102	BP					Y	
13103	G					Y	
13104	T	F262				Y	
13105	MV	F248				Y	
13106	G					Y	
13107	MV					Y	
13108	G					Y	
13109	B					Y	
13109A	T					Y	
13110	MV					Y	
13111	B					Y	
13111A	T					Y	
13115	G					Y	
13116	G					Y	
13117	HAP					NO	Puffing
13118	B					Y	
13119	DV	F524				Y	
13120	B					Y	
13121	G					Y	
13122	G					Y	
13123	BP	E53-0106				Y	
13124	G					Y	
13125	T	F356				Y	
13126	MV	F293				Y	
13127	G					Y	
13128	MV					Y	
13129	G					Y	
13130	B					Y	
13130A	T					Y	
13131	MV					Y	
13132	B					Y	
13132A	T					Y	
13135	G					Y	
13136	G					Y	
13137	HAP					Y	
13138	P					Y	
13139	B					Y	
13144	L					Y	

HVLC System at Pulp Mil (2 of 2)

Completed Date/Time: 3/15/21

Number	Type	Equip. Number	Pressure (+/-)	Background	VOC Reading	Is Component Free of Leaks or Defects?	Comments
14000	P					yes	
14001	MV	X170				y	
14002	P					y	
14003	T					y	
14003A	PI	52-PI-353				y	
14004	G					y	
14005	G					y	
14006	BP	M52-0092				y	
14007	T	X74				y	
14008	MV	X240				y	
14009	MV					y	
14010	G					y	
14011	P					y	
14012	MV	X169				y	
14013	P					y	
14014	T	X179				y	
14015	PI					y	
14016	G					y	
14017	MV					y	
14018	G					y	
14019	HAP					y	
14020	T					y	
14021	MV					y	
14023	P					y	
14024	MV	X171				y	
14025	P					y	
14026	T					y	
14027	G					yes	
14027A	MV					y	
14028	RB					y	
14045	P					y	
14046	T					y	
14047	PI					y	
14048	MV	X168				y	
14049	P					y	
14051	MV					y	
14052	G					y	
14053	HAP					No	Puffing
14054	P					y	
14055	MV	X167				y	
14056	P					y	
14057	T					y	
14057A	PI					y	
14058	G					y	
14059	G					y	
14060	BP	E52-0128				y	
14061	T	X159				y	
14062	MV	X265				y	
14063	MV					y	
14064	G					y	
14065	P					y	
14066	MV	SR313				y	
14069	P					y	
14070	MV	SR312				y	
14077	P					y	
14078	MV					y	
14088	L					y	

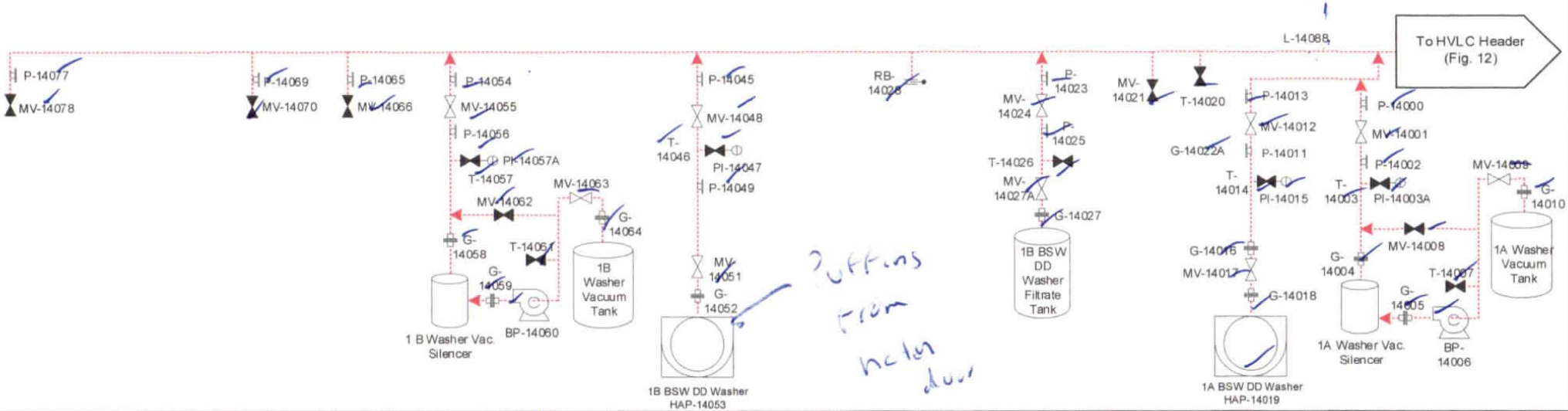

Vent Gases
Condensates
Liquor/Stock Lines
Process Lines

To Another Page and Indicated Equipment

From Another Page and Indicated Equipment

ENVIRONMENTAL 360

New-Indy – Catawba Mill

LDAR Inspection and Testing Diagrams
HVLC System at Pulp Mill (2 of 2)

Rev. Date
February 2021

Figure 14

Inspection Date: April 5, 2021

New Indy Containerboard - Catawba Mill
5300 Cureton Ferry Rd.
Catawba, SC 29704

2021 Monthly LDAR Inspection Summary Report

Table 1: Visual Inspection Summary Table

Equipment Number	Date	Description of Leak or Visual Defect
N/A	4/5/2021	No leaks or defects to report.

First Attempt to Repair must be completed by:	5 Days from Inspection Date	Not Applicable if no leaks were found.
Repairs must be completed by:	15 Days from Inspection Date	Not Applicable if no leaks were found.

This report provides a summary of leaks and visual defects found during the visual inspection of the closed-vent and condensate-collection systems and complies with the record keeping requirements of 63.454(b)(1-2, 4-5).

The facility must initiate repairs to any defects within five (5) calendar days from this inspection and the defects must be repaired within fifteen (15) calendar days of the inspection. If the leak or defect requires the system to be shutdown in order to make repairs, or more emissions would occur from attempting the repair than delaying the repair, then the repairs may be delayed until the next process unit shutdown. A report must be supplied with the repair date and associated information, or the reason for the delay if the repairs are not completed within the 15-day period. These response requirements are specific to 40 CFR 63, specifically 63.453(k)(6), 63.453(l)(3), and 63.964(b)(1-2). Documentation of all repair attempts made and any leaks/defects requiring a process unit shutdown must be completed according to 63.454(b)(6-11).

I certify that the results of the visual inspection are accurate and complete to the best of my knowledge.

Inspector Name: Josh Howard

Signature: Josh Howard

ENVIRONMENTAL 360

Inspection QA/QC Procedure

E360 Project Number?	New Indy catawba
Task Number (if applicable)?	April 2021 ~~August~~ JM LDAR monthly

Purpose of Form

To verify field work meets each critical element.

Visual Work Flow (WF)

Step 1
R - Verify field work by checking "X" each WF No.

Verification of Critical Elements

WF No.	Requirement	Yes?
	Work-flow step	1
	Verifier of critical elements for work-flow step	R
1	Was a bump test performed on the personal H_2S monitor?	✓
2	Have the most recent versions of the inspection forms been used?	✓
3	Were all inspection points identified correctly and inspected correctly?	✓
4	Did the operator/ contact verify to our inspector that all equipment was operating under normal operating conditions?	✓
5	Were any deficiencies identified in person to the client?	NA
6	Were all inspection questions answered with either a Yes, No, or NA?	✓
7	Were inspections performed during the required regulatory time frame?	✓

Approvals

Role	WF Step	Name	Approval (insert date)
Responsible Person (R)	1	Josh [illegible]	04/05/2021

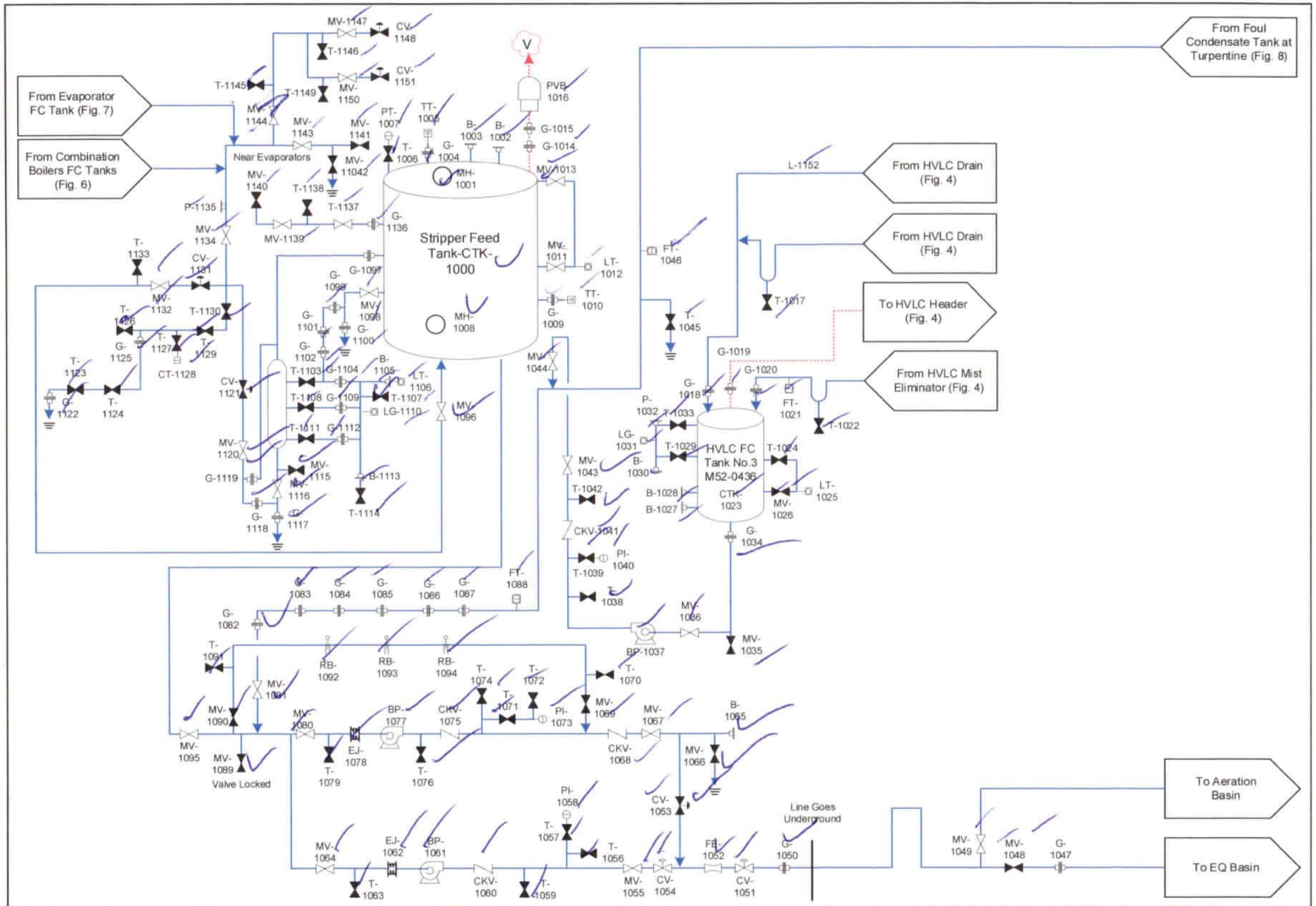

Vent Gases
Condensates
Liquor/Stock Lines
Process Lines

To Another Page and Indicated Equipment

From Another Page and Indicated Equipment

ENVIRONMENTAL 360

New-Indy – Catawba Mill

LDAR Inspection and Testing Diagrams
Stripper System Foul Condensate

Rev. Date
March 2021

Figure 1

Stripper System Foul Condensate

Completed Date/Time: 4/5/2021

Number	Type	Equip. Number	Pressure (+/-)	Background	VOC Reading	Is Component Free of Leaks or Defects?	Comments
1000	TK					yes	
1001	MH					Y	
1002	B					Y	
1003	B					Y	
1004	G					Y	
1005	TT					Y	
1006	T					Y	
1007	PT					Y	
1008	MH					Y	
1009	G					Y	
1010	TT					Y	
1011	MV					Y	
1012	LT					Y	
1013	MV					Y	
1014	G					Y	
1015	G					Y	
1016	PVG					Y	
1017	T					Y	
1018	G					Y	
1019	G					Y	
1020	G					Y	
1021	FT					Y	
1022	T					Y	
1023	CTK					Y	
1024	T					Y	
1025	LT					Y	
1026	MV					Y	
1027	B					Y	
1028	B					Y	
1029	T					Y	
1030	B					Y	
1031	LG					Y	
1032	P					Y	
1033	T					Y	
1034	G					Y	
1035	MV					Y	
1036	MV					Y	
1037	BP					Y	
1038	T					Y	
1039	T					Y	
1040	PI					Y	
1041	CKV					Y	
1042	T					Y	
1043	MV					Y	
1044	MV					Y	
1045	T					Y	
1046	FT					Y	
1047	G					Y	
1048	MV					Y	
1049	MV					Y	
1050	G					Y	
1051	CV					Y	
1052	FE					Y	
1053	CV					Y	
1054	CV					Y	
1055	MV					Y	
1056	T					Y	
1057	T					Y	
1058	PI					Y	
1059	T					Y	
1060	CKV					Y	
1061	BP					Y	
1062	EJ					Y	
1063	T					Y	
1064	NV					Y	
1065	B					Y	
1066	MV					Y	
1067	MV					Y	
1068	CKV					Y	
1069	MV					Y	
1070	T					Y	
1071	T					Y	
1072	T					Y	
1073	PI					Y	
1074	T					Y	
1075	CKV					yes	
1076	T					Y	
1077	BP					Y	
1078	EJ					Y	
1079	T					Y	
1080	MV					Y	
1081	MV					Y	
1082	G					Y	
1083	G					Y	
1084	G					Y	
1085	G					Y	
1086	G					Y	
1087	G					Y	
1088	FT					Y	
1089	MV					Y	
1090	MV					Y	
1091	T					Y	
1092	RB					Y	
1093	RB					Y	
1094	RB					Y	
1095	MV					Y	
1096	MV					Y	
1097	G					Y	
1098	MV					Y	
1099	T					Y	
1100	G					Y	
1101	G					Y	
1102	G					Y	
1103	T					Y	
1104	G					Y	
1105	B					Y	
1106	LT					Y	
1107	T					Y	
1108	T					Y	
1109	G					Y	
1110	LG					Y	
1111	T					Y	
1112	G					Y	
1113	B					Y	
1114	T					Y	
1115	MV					Y	
1116	MV					Y	
1117	G					Y	
1118	G					Y	
1119	G					Y	
1120	MV					Y	
1121	CV					Y	
1122	G					Y	
1123	T					Y	
1124	T					Y	
1125	G					Y	
1126	T					Y	
1127	T					Y	
1128	CTK					Y	
1129	T					Y	
1130	T					Y	
1131	CV					Y	
1132	MV					Y	
1133	T					Y	
1134	MV					Y	
1135	P					Y	
1136	G					Y	
1137	T					Y	
1138	T					Y	
1139	MV					Y	
1140	MV					Y	
1141	MV					Y	
1142	MV					Y	
1143	MV					Y	
1144	MV					Y	
1145	T					Y	
1146	T					Y	
1147	MV					Y	
1148	CV					Y	
1149	T					Y	
1150	MV					Y	
1151	CV					Y	
1152	L					Y	

Stripper Feed Tank

Completed Date/Time: 4/5/2021

Number	Type	Equip. Number	Pressure (+/-)	Background	VOC Reading	Is Component Free of Leaks or Defects?	Comments
2001	G					Yes	
2002	T					Y	
2003	MV					Y	
2004	T					Y	
2005	CV					Y	
2006	CV					Y	
2007	MV					Y	
2008	T					Y	
2009	T					Y	
2010	T					Y	
2011	PT					Y	
2012	PT					Y	
2013	RD					Y	
2014	CV					Y	
2015	T					Y	
2016	T					Y	
2017	T					Y	
2018	PI					Y	
2019	P					Y	
2020	FA					Y	
2021	P					Y	
2022	T					Y	
2023	T					Y	
2024	PI					Y	
2025	TI					Y	
2026	MV					Y	
2027	T					Y	
2028	L					Y	

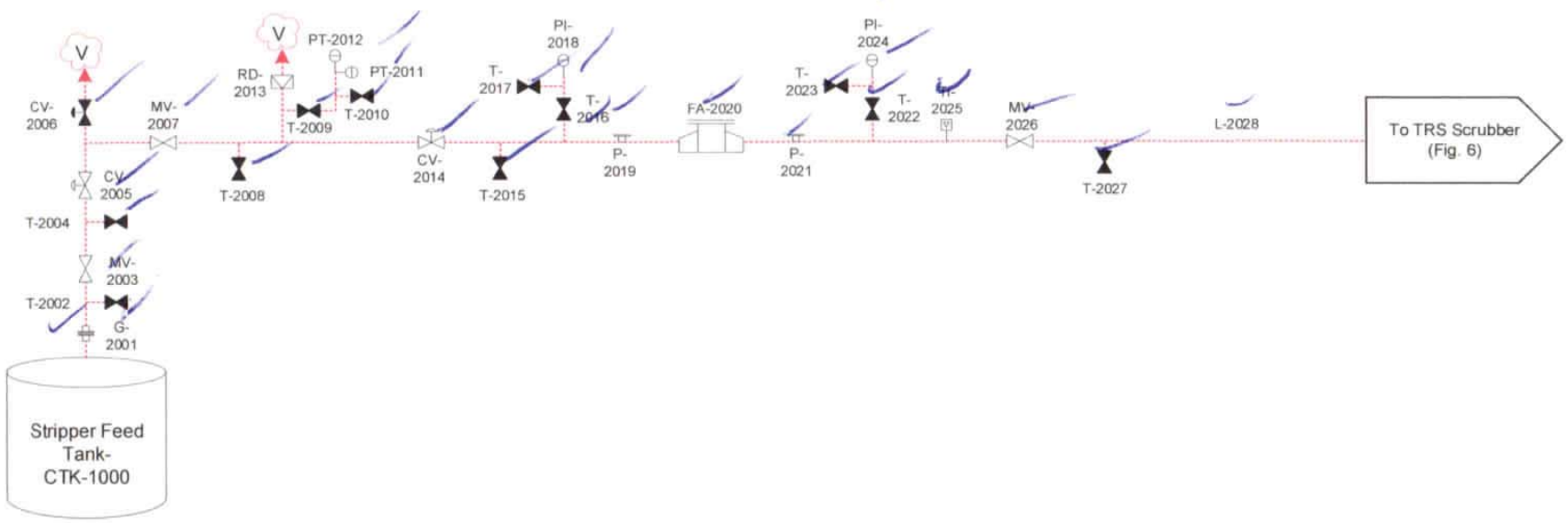

* Indicates car seal present

Vent Gases Condensates Liquor/Stock Lines Process Lines	To Another Page and Indicated Equipment From Another Page and Indicated Equipment	ENVIRONMENTAL360	New-Indy – Catawba Mill LDAR Inspection and Testing Diagrams Stripper Feed Tank	Rev. Date March 2021 Figure 2

Combination Boiler HVLC Incinerator
Completed Date/Time: 4/5/2021

Number	Type	Equip. Number	Pressure (+/-)	Background	VOC Reading	Is Component Free of Leaks or Defects?	Comments
3000	EJ					YES	
3001	MV					Y	
3002	P					Y	
3003	T					Y	
3004	PI					Y	
3005	FA					Y	
3006	T					Y	
3007	PI					Y	
3008	G					Y	
3009	TT					Y	
3010	P					Y	
3011	EJ					Y	
3012	MV					Y	
3013	T					Y	
3014	PI					Y	
3015	FA					Y	
3016	T					Y	
3017	PI					Y	
3018	EJ					Y	
3019	TT					Y	
3020	MV					Y	
3021	T					Y	
3022	PI					Y	
3023	FA					Y	
3024	T					Y	
3025	PI					Y	
3026	EJ					YES	
3027	MV					Y	
3028	P					Y	
3029	T					Y	
3030	PI					Y	
3031	FA					Y	
3032	T					Y	
3033	PI					Y	
3034	CV					Y	
3035	MV					Y	
3036	T					Y	
3037	PT					Y	
3038	MV					Y	
3039	RD					Y	
3040	CV					Y	
3041	MV					Y	
3042	CV					Y	
3043	G					Y	
3044	TT					Y	
3045	P					Y	
3046	P					Y	
3047	G					Y	
3048	G					Y	
3049	P					Y	
3050	ME					Y	
3051	P					Y	
3052	G					Y	
3053	G					Y	
3054	L					Y	

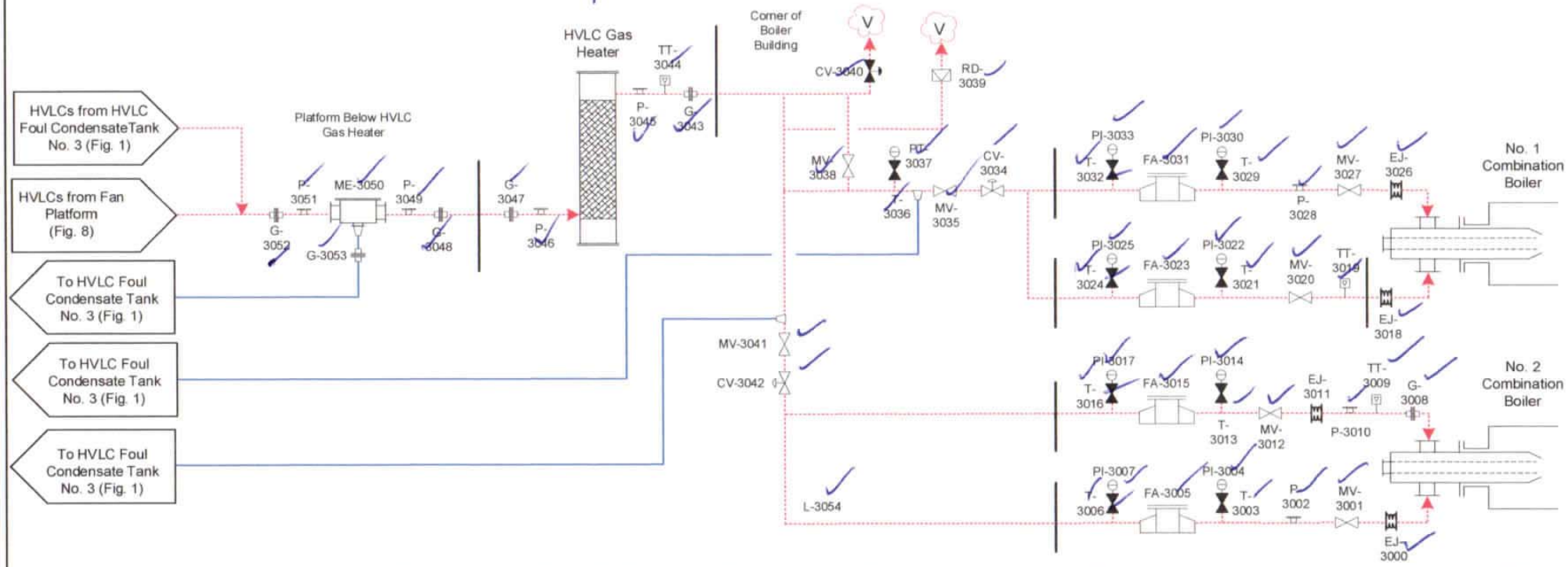

Vent Gases
Condensates
Liquor/Stock Lines
Process Lines

To Another Page and Indicated Equipment
From Another Page and Indicated Equipment

ENVIRONMENTAL 360

New-Indy – Catawba Mill

LDAR Inspection and Testing Diagrams
Combination Boiler HVLC Incineration

Rev. Date
March 2021

Figure 3

Combination Boiler LVHC Incineration

Completed Date/Time: 4/5/2021

Number	Type	Equip. Number	Pressure (+/-)	Background	VOC Reading	Is Component Free of Leaks or Defects?	Comments
4000	G					YES	
4001	EJ					Y	
4002	MV					Y	
4003	T					Y	
4004	PT					Y	
4005	TT					Y	
4006	P					Y	
4007	FA					Y	
4008	P					Y	
4009	T					Y	
4010	PT					Y	
4011	G					Y	
4012	EJ					Y	
4013	MV					Y	
4014	T					Y	
4015	PT					Y	
4016	TT					Y	
4017	P					Y	
4018	FA					Y	
4019	P					Y	
4020	T					Y	
4021	PT					Y	
4022	L					Y	

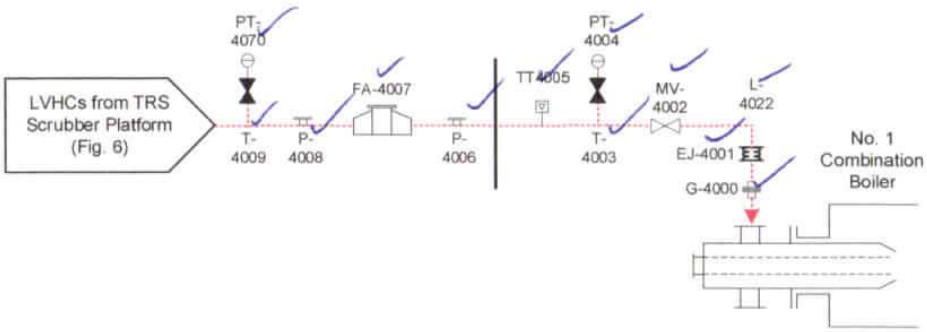

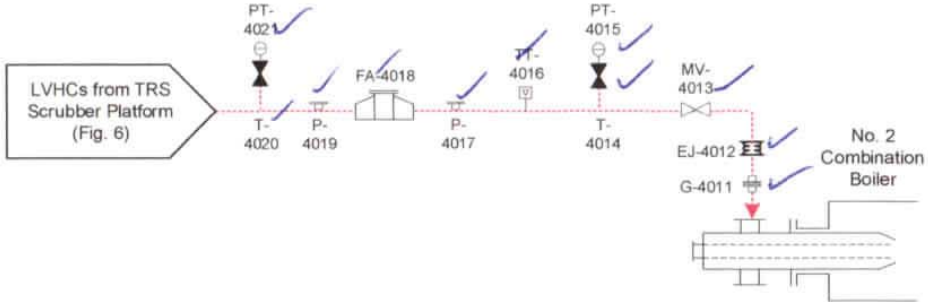

Vent Gases
Condensates
Liquor/Stock Lines
Process Lines

To Another Page and Indicated Equipment

From Another Page and Indicated Equipment

ENVIRONMENTAL360

New-Indy – Catawba Mill

LDAR Inspection and Testing Diagrams

Combination Boiler LVHC Incineration

Rev. Date March 2021

Figure 4

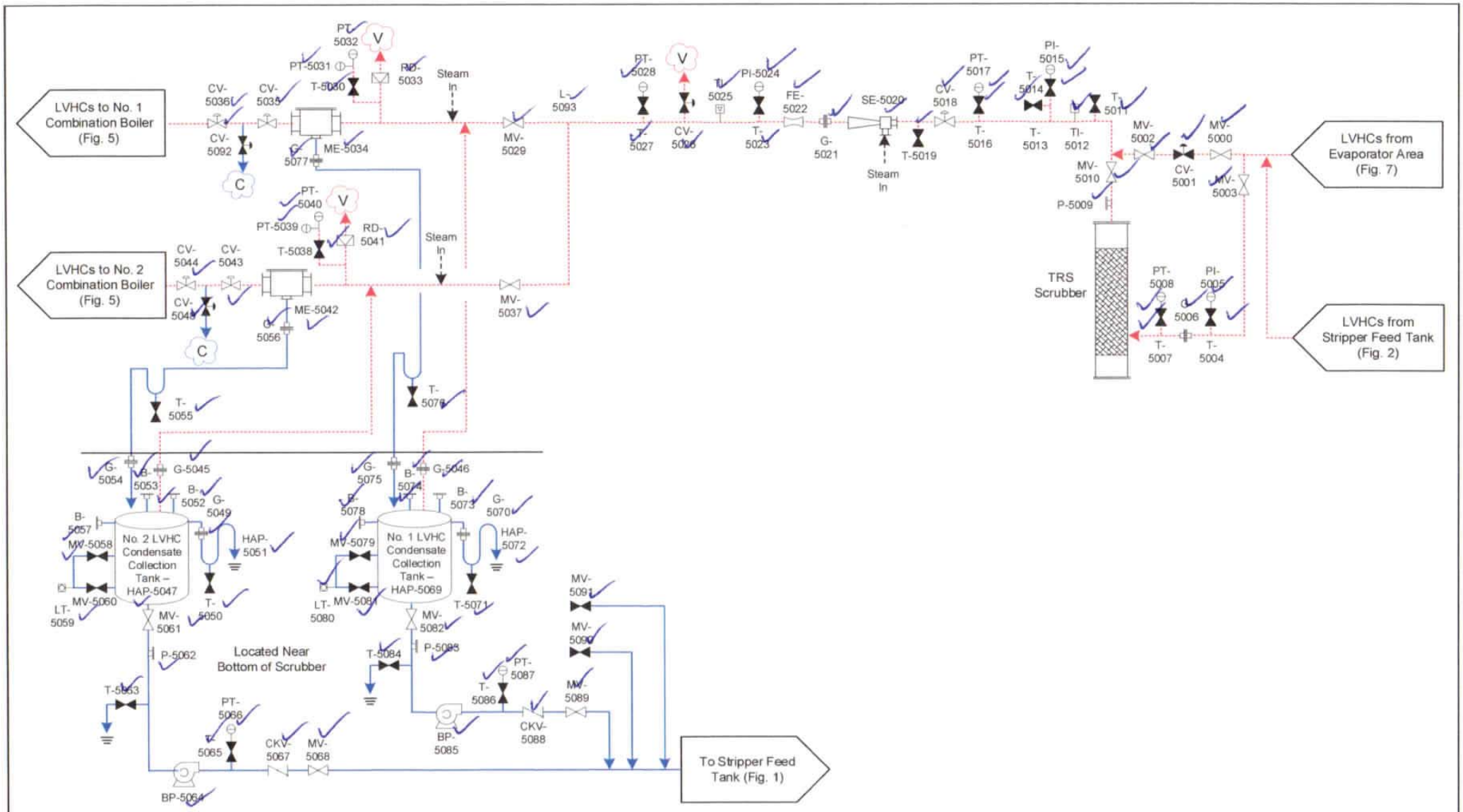

Vent Gases
Condensates
Liquor/Stock Lines
Process Lines

To Another Page and Indicated Equipment

From Another Page and Indicated Equipment

ENVIRONMENTAL 360

New-Indy – Catawba Mill

LDAR Inspection and Testing Diagrams

TRS Scrubber Platform

Rev. Date March 2021

Figure 5

TRS Scrubber Platform

Completed Date/Time: 4/5/2021

Number	Type	Equip. Number	Pressure (+/-)	Background	VOC Reading	Is Component Free of Leaks or Defects?	Comments
5000	MV					yes	
5001	CV					Y	
5002	MV					Y	
5003	MV					Y	
5004	T					Y	
5005	PI					Y	
5006	G					Y	
5007	T					Y	
5008	PT					Y	
5009	P					Y	
5010	MV					Y	
5011	T					Y	
5012	TI					Y	
5013	T					Y	
5014	T					Y	
5015	PI					Y	
5016	T					Y	
5017	PT					Y	
5018	T					Y	
5019	SE					Y	
5020	G					Y	
5021	FE					Y	
5022	T					Y	
5023	PI					Y	
5024	TI					Y	
5025	TI					Y	
5026	CV					Y	
5027	T					Y	
5028	PT					Y	
5029	MV					Y	
5030	T					Y	
5031	PT					Y	
5032	PT					Y	
5033	RD					Y	
5034	ME					Y	
5035	CV					Y	
5036	CV					Y	
5037	MV					Y	
5038	T					Y	
5039	PT					Y	
5040	PT					Y	
5041	RD					Y	
5042	ME					Y	
5043	CV					Y	
5044	CV					Y	
5045	G					Y	
5046	G					Y	
5047	HAP					yes	
5048	CV					Y	
5049	G					Y	
5050	T					Y	
5051	HAP					Y	
5052	B					Y	
5053	B					Y	
5054	G					Y	
5055	T					Y	
5056	G					Y	
5057	B					Y	
5058	MV					Y	
5059	LT					Y	
5060	MV					Y	
5061	MV					Y	
5062	P					Y	
5063	T					Y	
5064	BP					Y	
5065	T					Y	
5066	PT					Y	
5067	CKV					Y	
5068	MV					Y	
5069	HAP					Y	
5070	G					Y	
5071	T					Y	
5072	HAP					Y	
5073	B					Y	
5074	B					Y	
5075	G					Y	
5076	T					Y	
5077	G					Y	
5078	B					Y	
5079	MV					Y	
5080	LT					Y	
5081	MV					Y	
5082	MV					Y	
5083	P					Y	
5084	T					Y	
5085	BP					Y	
5086	T					Y	
5087	PT					Y	
5088	CKV					Y	
5089	MV					Y	
5090	MV					Y	
5091	MV					Y	
5092	CV					Y	
5093	L					Y	

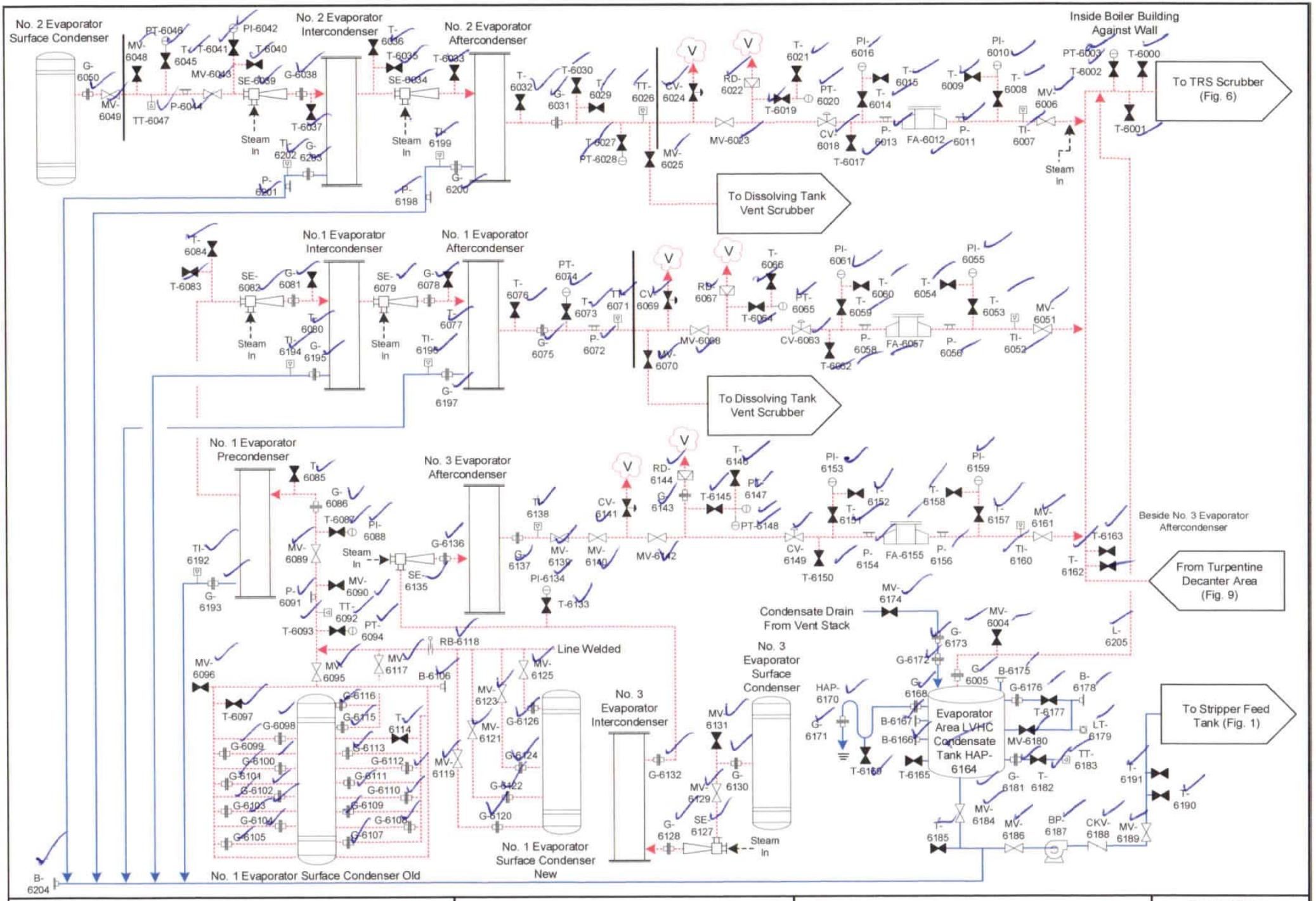

Vent Gases Condensates Liquor/Stock Lines Process Lines	To Another Page and Indicated Equipment From Another Page and Indicated Equipment	ENVIRONMENTAL 360	New-Indy – Catawba Mill LDAR Inspection and Testing Diagrams Evaporator System
			Rev. Date March 2021 Figure 6

Evaporator System

Completed Date/Time: 4/5/2021

Number	Type	Equip. Number	Pressure (+/-)	Background	VOC Reading	Is Component Free of Leaks or Defects?	Comments
6000	T					yes	
6001	T					Y	
6002	T					Y	
6003	PT					Y	
6004	MV					Y	
6005	G					Y	
6006	MV					Y	
6007	TI					Y	
6008	T					Y	
6009	T					Y	
6010	PI					Y	
6011	P					Y	
6012	FA					Y	
6013	P					Y	
6014	T					Y	
6015	T					Y	
6016	PI					Y	
6017	T					Y	
6018	CV					Y	
6019	T					Y	
6020	PT					Y	
6021	T					Y	
6022	RD					Y	
6023	MV					Y	
6024	CV					Y	
6025	MV					Y	
6026	TT					Y	
6027	T					Y	
6028	PT					Y	
6029	T					Y	
6030	T					Y	
6031	G					Y	
6032	T					Y	
6033	T					Y	
6034	SE					Y	
6035	T					Y	
6036	T					Y	
6037	T					Y	
6038	G					Y	
6039	SE					Y	
6040	T					Y	
6041	T					Y	
6042	PI					Y	
6043	MV					Y	
6044	P					Y	
6045	T					Y	
6046	PT					Y	
6047	TT					Y	
6048	MV					Y	
6049	MV					yes	
6050	G					Y	
6051	MV					Y	
6052	TI					Y	
6053	T					Y	
6054	T					Y	
6055	PI					Y	
6056	P					Y	
6057	FA					Y	
6058	P					Y	
6059	T					Y	
6060	T					Y	
6061	PI					Y	
6062	T					Y	
6063	CV					Y	
6064	T					Y	
6065	PT					Y	
6066	T					Y	
6067	RD					Y	
6068	MV					Y	
6069	CV					Y	
6070	MV					Y	
6071	TT					Y	
6072	P					Y	
6073	T					Y	
6074	PT					Y	
6075	G					Y	
6076	T					Y	
6077	T					Y	
6078	G					Y	
6079	SE					Y	
6080	T					Y	
6081	G					Y	
6082	SE					Y	
6083	T					Y	
6084	T					Y	
6085	T					Y	
6086	G					Y	
6087	T					Y	
6088	PI					Y	
6089	MV					Y	
6090	MV					Y	
6091	P					Y	
6092	TT					Y	
6093	T					Y	
6094	PT					Y	
6095	MV					Y	
6096	MV					Y	
6097	T					Y	
6098	G					Y	
6099	G					Y	

4/5/2021

6100	G					yes	
6101	G					Y	
6102	G					Y	
6103	G					Y	
6104	G					Y	
6105	G					Y	
6106	B					Y	
6107	G					Y	
6108	G					Y	
6109	G					Y	
6110	G					Y	
6111	G					Y	
6112	G					Y	
6113	G					Y	
6114	T					Y	
6115	G					Y	
6116	G					Y	
6117	MV					Y	
6118	RB					Y	
6119	MV					Y	
6120	G					Y	
6121	MV					Y	
6122	G					Y	
6123	MV					Y	
6124	G					Y	
6125	MV					Y	
6126	G					Y	
6127	SE					Y	
6128	G					Y	
6129	MV					Y	
6130	G					Y	
6131	MV					Y	
6132	G					Y	
6133	T					Y	
6134	PI					Y	
6135	SE					Y	
6136	G					Y	
6137	G					Y	
6138	TI					Y	
6139	MV					Y	
6140	MV					Y	
6141	CV					Y	
6142	MV					Y	
6143	G					Y	
6144	RD					Y	
6145	T					Y	
6146	T					Y	
6147	PT					Y	
6148	PT					Y	
6149	CV					Y	
6150	T					Y	
6151	T					Y	
6152	T					Y	

6153	PI					yes	
6154	P					Y	
6155	FA					Y	
6156	P					Y	
6157	T					Y	
6158	T					Y	
6159	PI					Y	
6160	TI					Y	
6161	MV					Y	
6162	T					Y	
6163	T					Y	
6164	HAP					Y	
6165	T					Y	
6166	B					Y	
6167	B					Y	
6168	G					Y	
6169	T					Y	
6170	HAP					Y	
6171	G					Y	
6172	G					Y	
6173	G					Y	
6174	MV					Y	
6175	B					Y	
6176	G					Y	
6177	T					Y	
6178	B					Y	
6179	LT					Y	
6180	MV					Y	
6181	G					Y	
6182	T					Y	
6183	TT					Y	
6184	MV					Y	
6185	T					Y	
6186	MV					Y	
6187	BP					Y	
6188	CKV					Y	
6189	MV					Y	
6190	T					Y	
6191	T					Y	
6192	TAA					Y	
6193	G					Y	
6194	TI					Y	
6195	G					Y	
6196	TI					Y	
6197	G					Y	
6198	P					Y	
6199	TI					Y	
6200	G					Y	
6201	P					Y	
6202	TI					Y	
6203	G					Y	
6204	B					Y	
6205	LT					Y	

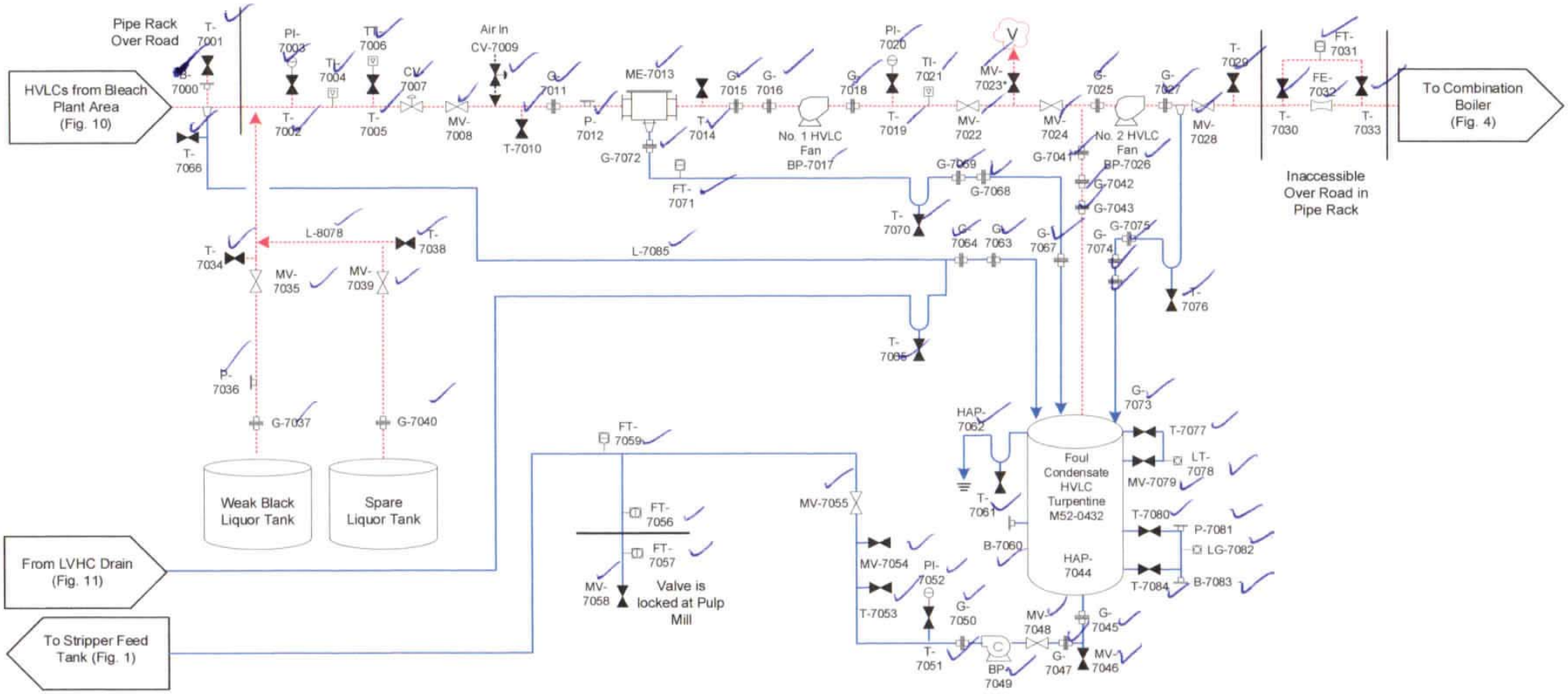

* Indicates car seal present

Vent Gases Condensates Liquor/Stock Lines Process Lines	To Another Page and Indicated Equipment From Another Page and Indicated Equipment	ENVIRONMENTAL 360	New-Indy – Catawba Mill LDAR Inspection and Testing Diagrams HVLC Blower Platform

Rev. Date March 2021

Figure 7

HVLC Blower Platform

Completed Date/Time: 4/5/2021

Number	Type	Equip. Number	Pressure (+/-)	Background	VOC Reading	Is Component Free of Leaks or Defects?	Comments
7000	B					yes	
7001	Type					Y	
7002	Type					Y	
7003	PI					Y	
7004	TI					Y	
7005	T					Y	
7006	TT					Y	
7007	CV					Y	
7008	MV					Y	
7009	CV					Y	
7010	T					Y	
7011	G					Y	
7012	PI					Y	
7013	ME					Y	
7014	T					Y	
7015	G					Y	
7016	G					Y	
7017	BP					Y	
7018	G					Y	
7019	T					Y	
7020	PI					Y	
7021	TI					Y	
7022	MV					Y	
7023	MV					Y	Car seal present
7024	MV					Y	
7025	G					Y	
7026	BP					Y	
7027	G					Y	
7028	MV					Y	
7029	T					Y	
7030	T					Y	
7031	FT					Y	
7032	FE					Y	
7033	T					Y	
7034	T					Y	
7035	MV					Y	
7036	P					Y	
7037	G					Y	
7038	T					Y	
7039	MV					Y	
7040	G					yes	
7041	G					Y	
7042	G					Y	
7043	G					Y	
7044	HAP					Y	
7045	G					Y	
7046	MV					Y	
7047	G					Y	
7048	MV					Y	
7049	BP					Y	
7050	G					Y	
7051	T					Y	
7052	PI					Y	
7053	T					Y	
7054	MV					Y	
7055	MV					Y	
7056	FT					Y	
7057	FT					Y	
7058	MV					Y	
7059	FT					Y	
7060	B					Y	
7061	T					Y	
7062	HAP					Y	
7063	G					Y	
7064	G					Y	
7065	T					Y	
7066	T					Y	
7067	G					Y	
7068	G					Y	
7069	G					Y	
7070	T					Y	
7071	FT					Y	
7072	G					Y	
7073	G					Y	
7074	G					Y	
7075	G					Y	
7076	T					Y	
7077	T					Y	
7078	LT					Y	
7079	MV					Y	
7080	T					Y	
7081	P					Y	
7082	LG					Y	
7083	B					Y	
7084	T					Y	
7085	L					Y	

Turpentine Decanter and Standpipe

Completed Date/Time: 4/5/2021

Number	Type	Equip. Number	Pressure (+/-)	Background	VOC Reading	Is Component Free of Leaks or Defects?	Comments
8000	Type					yes	
8001	G					Y	
8002	EJ					Y	
8003	G					Y	
8004	PI					Y	
8005	Type					Y	
8006	Type					Y	
8007	MV					Y	
8008	TI					Y	
8009	PI					Y	
8010	FA					Y	
8011	PI					Y	
8012	T					Y	
8013	T					Y	
8014	T					Y	
8015	PI					Y	
8016	CV					Y	
8017	T					Y	
8018	T					Y	
8019	PT					Y	
8020	PT					Y	
8021	RD					Y	
8022	MV					Y	
8023	CV					Y	
8024	MV					Y	
8025	G					Y	
8026	MV					Y	
8027	MV					Y	
8028	PVB					Y	
8029	G					Y	
8030	EJ					Y	
8031	G					yes	
8032	PI					Y	
8033	T					Y	
8034	T					Y	
8035	TI					Y	
8036	MV					Y	
8037	P					Y	
8038	FA					Y	
8039	P					Y	
8040	T					Y	
8041	T					Y	
8042	PI					Y	
8043	T					Y	
8044	T					Y	
8045	CV					Y	
8046	T					Y	
8047	T					Y	
8048	T					Y	
8049	T					Y	
8050	PT					Y	
8051	PT					Y	
8052	RD					Y	
8053	MV					Y	
8054	CV					Y	
8055	G					Y	
8056	G					Y	
8057	T					Y	
8058	TT					Y	
8059	MV					Y	
8060	MV					Y	
8061	MV					Y	
8062	HAP					Y	
8063	MV					Y	
8064	L					Y	

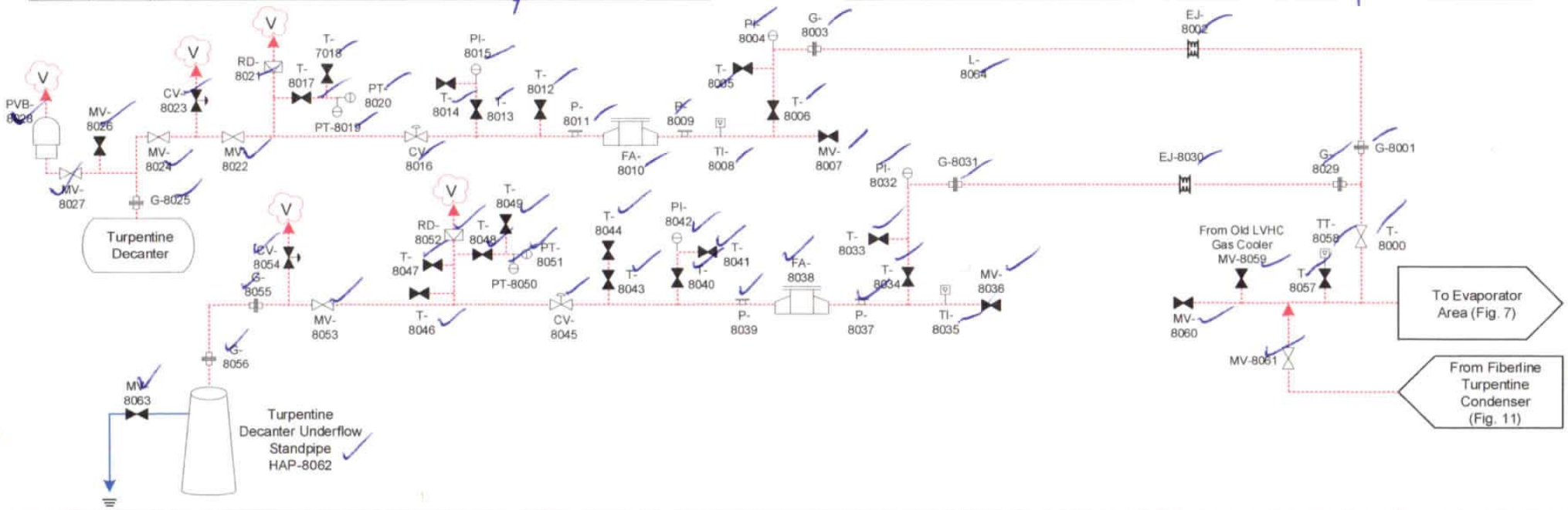

Vent Gases
Condensates
Liquor/Stock Lines
Process Lines

To Another Page and Indicated Equipment

From Another Page and Indicated Equipment

ENVIRONMENTAL 360

New-Indy – Catawba Mill

LDAR Inspection and Testing Diagrams
Turpentine Decanter and Standpipe

Rev. Date
March 2021

Figure 8

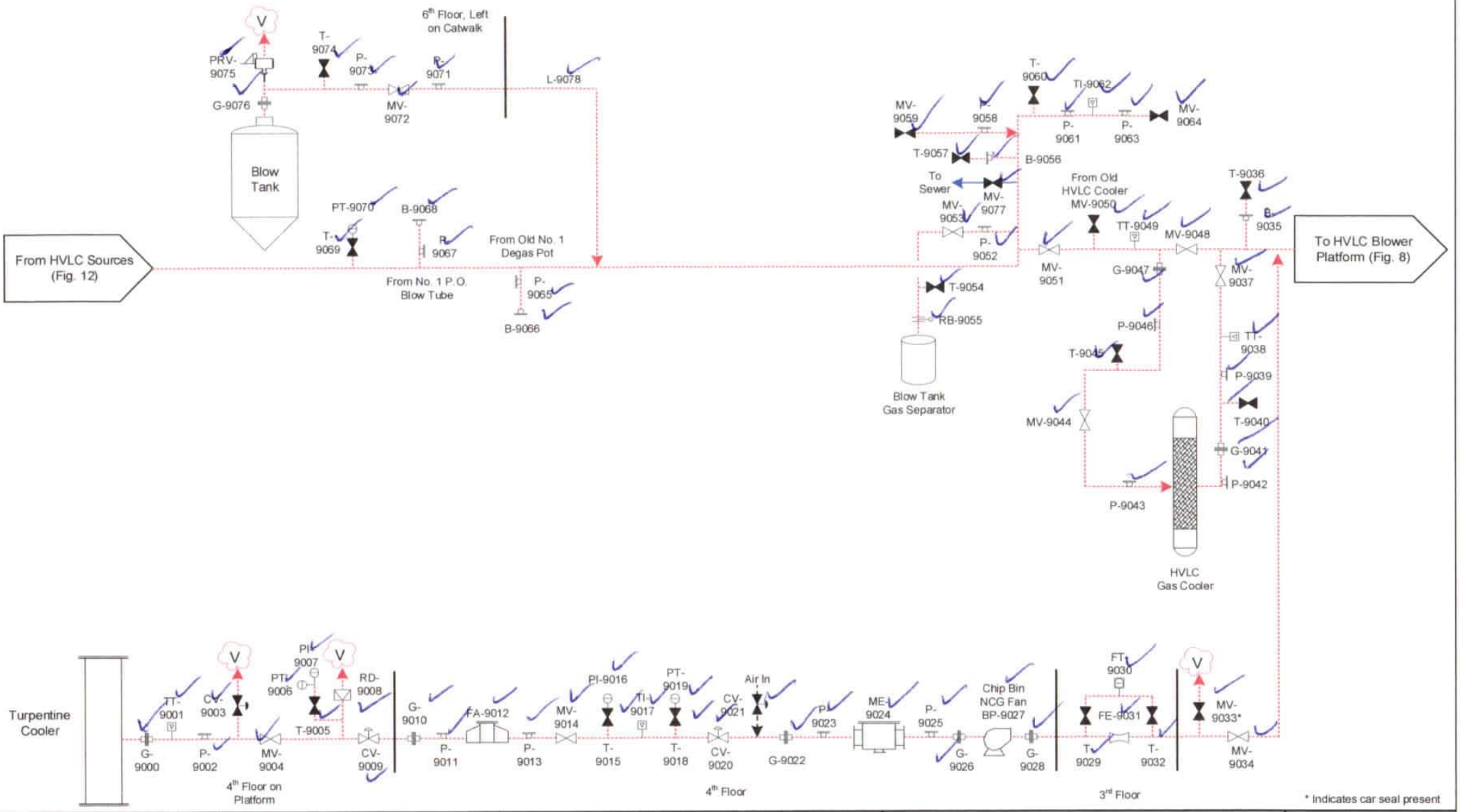

Vent Gases
Condensates
Liquor/Stock Lines
Process Lines

To Another Page and Indicated Equipment

From Another Page and Indicated Equipment

ENVIRONMENTAL 360

New-Indy – Catawba Mill

LDAR Inspection and Testing Diagrams
Turpentine Cooler and Blow Tank

Rev. Date
March 2021

Figure 9

Turpentine Cooler and Blow Tank

Completed Date/Time: 4/5/2021

Number	Type	Equip. Number	Pressure (+/-)	Background	VOC Reading	Is Component Free of Leaks or Defects?	Comments
9000	G					yes	
9001	TT					Y	
9002	P					Y	
9003	CV					Y	
9004	MV					Y	
9005	T					Y	
9006	OT					Y	
9007	PI					Y	
9008	RD					Y	
9009	CV					Y	
9010	G					Y	
9011	P					Y	
9012	FA					Y	
9013	P					Y	
9014	MV					Y	
9015	T					Y	
9016	PI					Y	
9017	TI					Y	
9018	T					Y	
9019	PT					Y	
9020	CV					Y	
9021	CV					Y	
9022	G					Y	
9023	P					Y	
9024	ME					Y	
9025	P					Y	
9026	G					Y	
9027	BP					Y	
9028	G					Y	
9029	T					Y	
9030	FT					Y	
9031	FE					Y	
9032	T					Y	
9033	MV					Y	Car seal present
9034	MV					Y	
9035	BP					Y	
9036	G					yes	
9037	MV					Y	
9038	TT					Y	
9039	P					Y	
9040	T					Y	
9041	G					Y	
9042	P					Y	
9043	P					Y	
9044	MV					Y	
9045	T					Y	
9046	P					Y	
9047	G					Y	
9048	MV					Y	
9049	TT					Y	
9050	MV					Y	
9051	MV					Y	
9052	P					Y	
9053	MV					Y	
9054	T					Y	
9055	RB					Y	
9056	BP					Y	
9057	T					Y	
9058	P					Y	
9059	MV					Y	
9060	T					Y	
9061	P					Y	
9062	TI					Y	
9063	P					Y	
9064	MV					Y	
9065	P					Y	
9066	BP					Y	
9067	P					Y	
9068	BP					Y	
9069	T					Y	
9070	PT					Y	
9071	P					Y	
9072	MV					Y	
9073	P					Y	
9074	T					Y	
9075	PRV					Y	
9076	G					Y	
9077	MV					Y	
9078	L					Y	

Turpentine Condenser and LVHC Gas Cooler

Completed Date/Time: 4/5/2021

Number	Type	Equip. Number	Pressure (+/-)	Background	VOC Reading	Is Component Free of Leaks or Defects?	Comments
10000	RB					yes	
10001	TT					Y	
10002	PI					Y	
10003	PI					Y	
10004	G					Y	
10005	PI					Y	
10006	PI					Y	
10007	FA					Y	
10008	PI					Y	
10009	PI					Y	
10010	G					Y	
10011	PI					Y	
10012	TT					Y	
10013	CV					yes	
10014	MV					Y	
10015	T					Y	
10016	T					Y	
10017	PT					Y	
10018	RD					Y	
10019	P					Y	
10020	CV					Y	
10021	T					Y	
10022	T					Y	
10023	PI					Y	
10024	FA					Y	
10025	P					Y	
10026	MV					Y	
10027	T					Y	
10028	HAP					Y	
10029	L					Y	

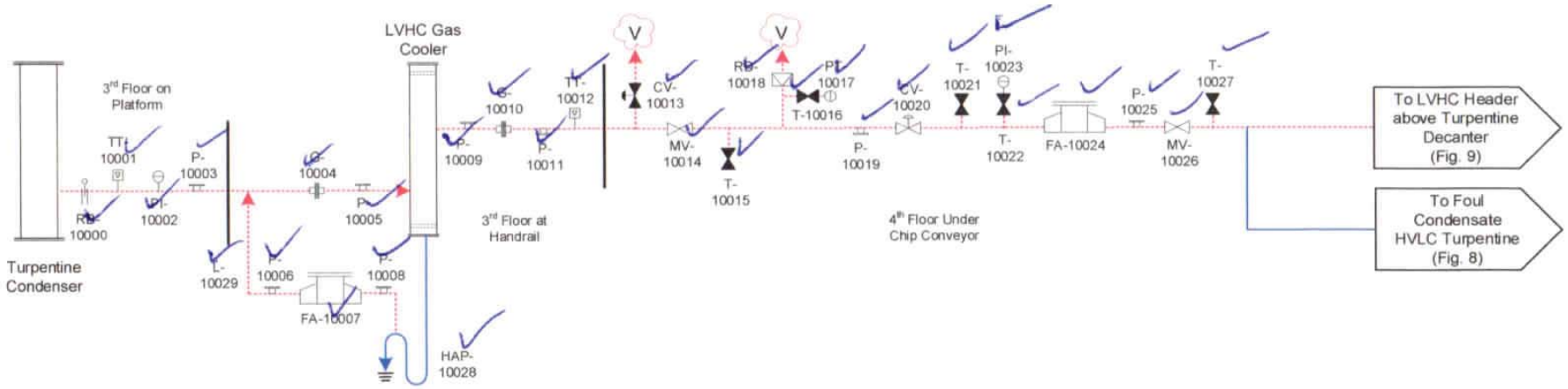

Vent Gases
Condensates
Liquor/Stock Lines
Process Lines

To Another Page and Indicated Equipment

From Another Page and Indicated Equipment

ENVIRONMENTAL 360

New-Indy – Catawba Mill

LDAR Inspection and Testing Diagrams
Turpentine Condenser and LVHC Gas Cooler

Rev. Date
March 2021

Figure 10

HVLC System at Pulp Mil (1 of 2)

Completed Date/Time: 4/5/2021

Number	Type	Equip. Number	Pressure (+/-)	Background	VOC Reading	Is Component Free of Leaks or Defects?	Comments
11000	P					yes	
11001	MV					y	
11002	P					y	
11003	T					y	
11004	G					y	
11005	P					y	
11006	MV					y	
11007	P					y	
11008	B					y	
11009	T					y	
11010	P					y	
11011	MV					y	
11012	P					y	
11013	T					yes	
11014	P					y	
11015	MV					y	
11016	P					y	
11017	T					y	
11018	P					y	
11019	MV					y	
11020	P					y	
11021	T					y	
11022	G					y	
11023	P					y	
11024	MV					y	
11025	P					y	
11026	MV					y	
11027	T					y	
11028	P					y	
11029	G					y	
11030	L					y	

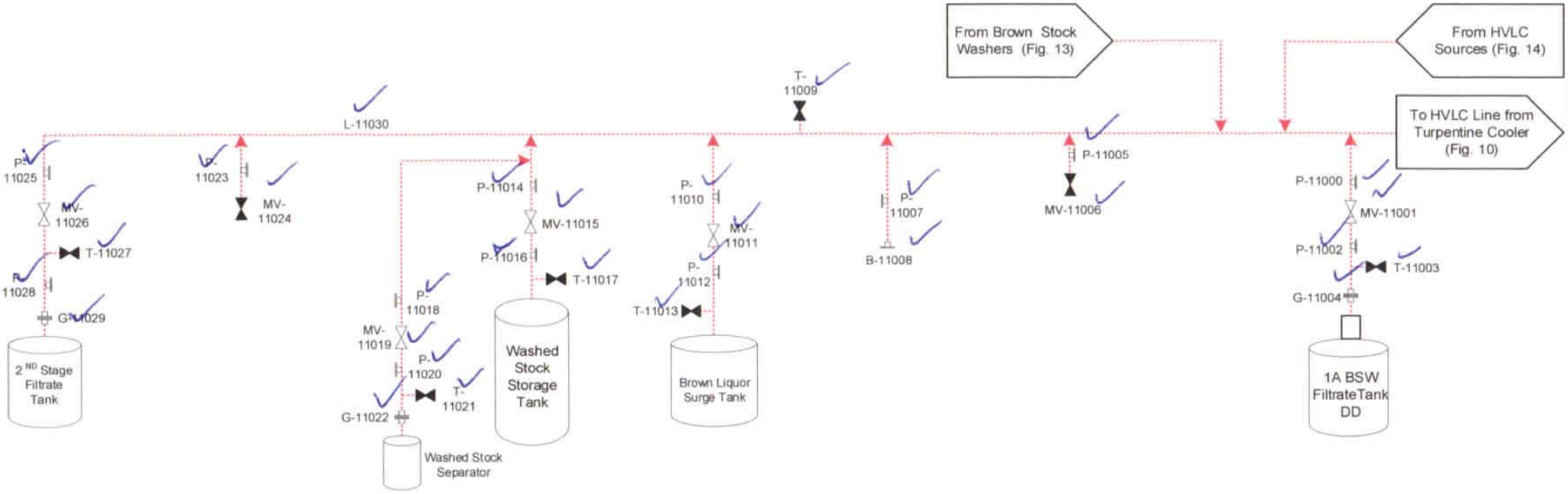

Vent Gases
Condensates
Liquor/Stock Lines
Process Lines

To Another Page and Indicated Equipment

From Another Page and Indicated Equipment

ENVIRONMENTAL 360

New-Indy – Catawba Mill

LDAR Inspection and Testing Diagrams
HVLC System at Pulp Mill (1 of 2)

Rev. Date March 2021

Figure 11

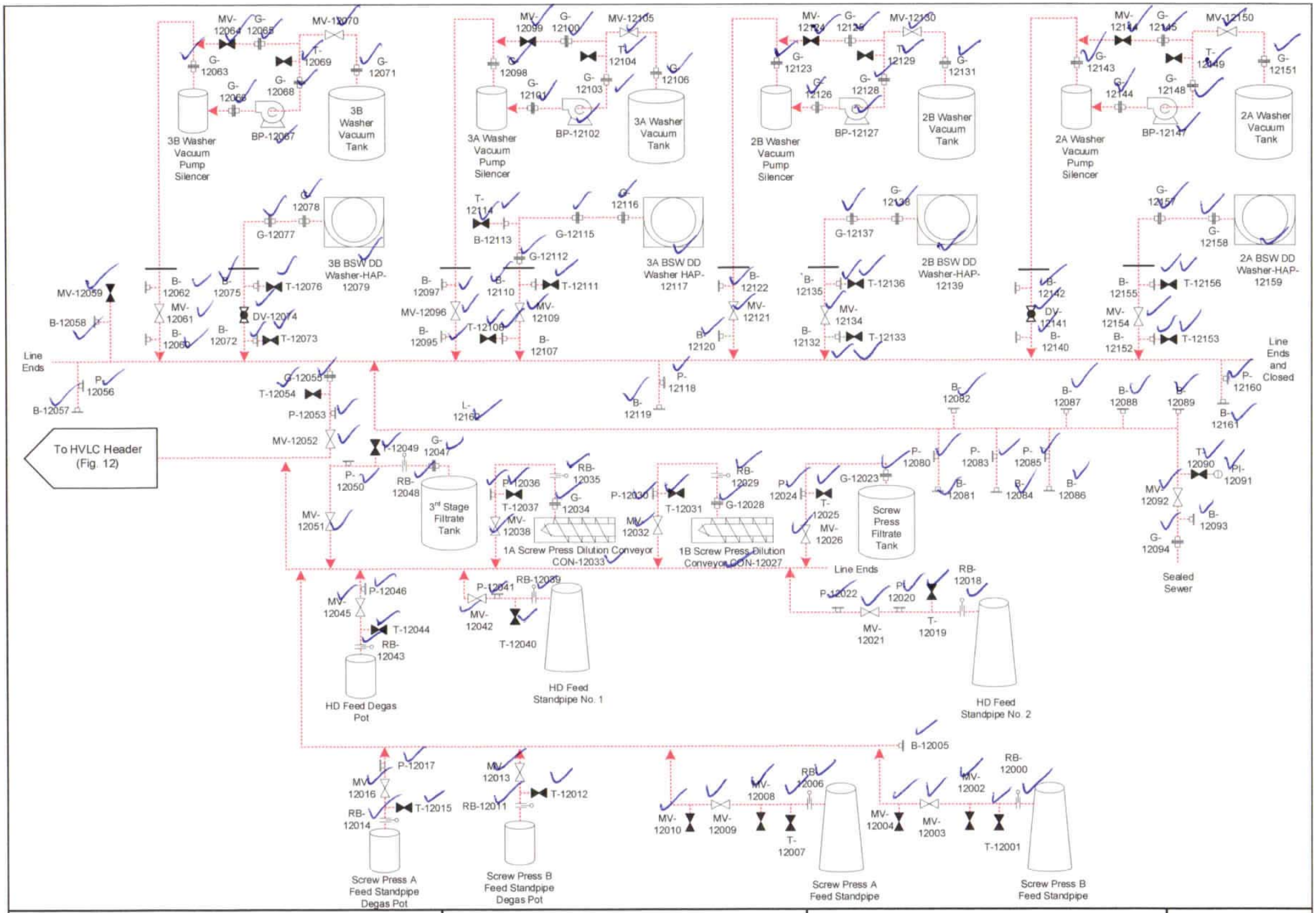

Vent Gases Bleach Gases Condensates Liquor/Stock Lines Process Lines	To Another Page and Indicated Equipment From Another Page and Indicated Equipment	ENVIRONMENTAL360	New-Indy – Catawba Mill LDAR Inspection and Testing Diagrams Pulp Mill BSWs	Rev. Date March 2021 Figure 12

Pulp Mill BSWs

Completed Date/Time: 4/5/2021

Number	Type	Equip. Number	Pressure (+/-)	Background	VOC Reading	Is Component Free of Leaks or Defects?	Comments
12000	RB					yes	
12001	T					Y	
12002	MV					Y	
12003	MV					Y	
12004	MV					Y	
12005	B					Y	
12006	RB					Y	
12007	T					Y	
12008	MV					Y	
12009	MV					Y	
12010	MV					Y	
12011	RB					Y	
12012	T					Y	
12013	MV					Y	
12014	RB					Y	
12015	T					Y	
12016	MV					Y	
12017	P					Y	
12018	RB					Y	
12019	T					Y	
12020	P					Y	
12021	MV					Y	
12022	P					Y	
12023	G					Y	
12024	P					Y	
12025	T					Y	
12026	MV					Y	
12027	CON					Y	
12028	G					Y	
12029	RB					Y	
12030	P					Y	
12031	T					Y	
12032	MV					Y	
12033	CON					Y	
12034	G					Y	
12035	RB					Y	
12036	P					Y	
12037	T					Y	
12038	MV					Y	
12039	RB					Y	
12040	T					Y	
12041	P					Y	
12042	MV					yes	
12043	RB					Y	
12044	T					Y	
12045	MV					Y	
12046	P					Y	
12047	G					Y	
12048	RB					Y	
12049	T					Y	
12050	P					Y	
12051	MV					Y	
12052	MV					Y	
12053	P					Y	
12054	T					Y	
12055	G					Y	
12056	P					Y	
12057	B					Y	
12058	B					Y	
12059	MV					Y	
12060	B					Y	
12061	MV					Y	
12062	B					Y	
12063	G					Y	
12064	MV					Y	
12065	G					Y	
12066	G					Y	
12067	BP					Y	
12068	G					Y	
12069	T					Y	
12070	MV					Y	
12071	G					Y	
12072	B					Y	
12073	T					Y	
12074	DV					Y	
12075	T					Y	
12076	T					Y	
12077	G					Y	
12078	G					Y	
12079	HAP					Y	
12080	P					Y	
12081	B					Y	
12082	B					Y	
12083	P					Y	
12084	B					Y	
12085	P					Y	
12086	B					Y	

12087	B	4/5/2021				yes	
12088	B					Y	
12089	B					Y	
12090	T					Y	
12091	PI					Y	
12092	MV					Y	
12093	B					Y	
12094	G					Y	
12095	B					Y	
12096	MV					Y	
12097	B					Y	
12098	G					Y	
12099	MV					Y	
12100	G					Y	
12101	G					Y	
12102	BP					Y	
12103	G					Y	
12104	T					Y	
12105	MV					Y	
12106	G					Y	
12107	B					Y	
12108	T					Y	
12109	MV					Y	
12110	B					Y	
12111	T					Y	
12112	G					Y	
12113	B					Y	
12114	T					Y	
12115	G					Y	
12116	G					Y	
12117	HAP					Y	
12118	P					Y	
12119	B					Y	
12120	B					Y	
12121	MV					Y	
12122	B					Y	
12123	G					Y	
12124	MV					Y	
12125	G					Y	
12126	G					Y	
12127	BP					Y	
12128	G					Y	
12129	T					Y	

12130	MV					yes	
12131	G					Y	
12132	B					Y	
12133	T					Y	
12134	MV					Y	
12135	B					Y	
12136	T					Y	
12137	G					Y	
12138	G					Y	
12139	HAP					Y	
12140	B					Y	
12141	DV					Y	
12142	B					Y	
12143	G					Y	
12144	MV					Y	
12145	G					Y	
12146	G					Y	
12147	BP					Y	
12148	G					Y	
12149	T					Y	
12150	MV					Y	
12151	G					Y	
12152	B					Y	
12153	T					Y	
12154	MV					Y	
12155	B					Y	
12156	T					Y	
12157	G					Y	
12158	G					Y	
12159	HAP					Y	
12160	P					Y	
12161	B					Y	
12162	L					Y	

HVLC System at Pulp Mil (2 of 2)

Completed Date/Time: 4/5/2021

Number	Type	Equip. Number	Pressure (+/-)	Background	VOC Reading	Is Component Free of Leaks or Defects?	Comments
13000	P					yes	
13001	MV					Y	
13002	P					Y	
13003	T					Y	
13004	PI					Y	
13005	G					Y	
13006	MV					Y	
13007	G					Y	
13008	BP					Y	
13009	T					Y	
13010	MV					Y	
13011	G					Y	
13012	P					Y	
13013	MV					Y	
13014	P					Y	
13015	T					Y	
13016	PI					Y	
13017	G					Y	
13018	MV					Y	
13019	G					Y	
13020	HAP					Y	
13021	T					Y	
13022	MV					Y	
13023	P					Y	
13024	MV					Y	
13025	P					yes	
13026	T					Y	
13027	MV					Y	
13028	G					Y	
13029	RB					Y	
13030	P					Y	
13031	MV					Y	
13032	T					Y	
13033	PI					Y	
13034	P					Y	
13035	MV					Y	
13036	G					Y	
13037	HAP					Y	
13038	P					Y	
13039	MV					Y	
13040	P					Y	
13041	T					Y	
13042	PI					Y	
13043	G					Y	
13044	MV					Y	
13045	G					Y	
13046	BP					Y	
13047	T					Y	
13048	MV					Y	
13049	G					Y	
13050	P					Y	
13051	MV					Y	
13052	P					Y	
13053	MV					Y	
13054	P					Y	
13055	MV					Y	
13056	L					Y	

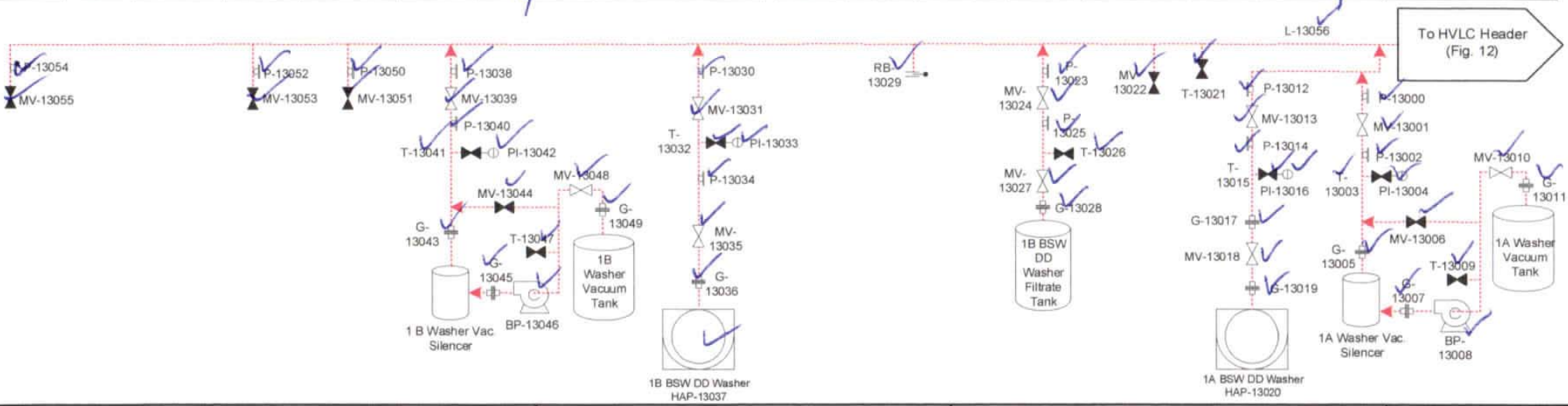

Vent Gases
Condensates
Liquor/Stock Lines
Process Lines

To Another Page and Indicated Equipment

From Another Page and Indicated Equipment

ENVIRONMENTAL 360

New-Indy – Catawba Mill

LDAR Inspection and Testing Diagrams
HVLC System at Pulp Mill (2 of 2)

Rev. Date March 2021

Figure 13

Inspection Date: May 3-7, 2021

New Indy Containerboard - Catawba Mill
5300 Cureton Ferry Rd.
Catawba, SC 29704

ENVIRONMENTAL360

2021 LDAR Annual Method 21 Testing and Negative-Pressure Certification Summary Report

Equipment Number	Date	Description of Leak or Visual Defect
CV-5026	5/4/2021	Control valve CV-5026 is located on the LVHC line at outlet of Steam Ejector and prior to the mist eliminators. The valve is not collecting gasses and had a VOC reading of 1558 ppm. Maintenance made first attempt by tightening shaft of valve, but was unsuccessful.
WSR-12079	5/3/2021	The 3B BSW DD Washer is puffing from an open hatch door.

First Attempt to Repair must be completed by:	5 Days from Inspection Date	Not Applicable if no leaks were found.
Repairs must be completed by:	15 Days from Inspection Date	Not Applicable if no leaks were found.

This report provides a summary of leaks and defects found during the Annual Method 21 Testing, Negative-Pressure Certification, and Visual inspection of the closed-vent and condensate collection systems and complies with the record keeping requirements of 63.454(b)(1-5).

The facility must initiate repairs to any defects within five (5) calendar days from this inspection and the defects must be repaired within fifteen (15) calendar days of the inspection. If the leak or defect requires the system to be shutdown in order to make repairs, or more emissions would occur from attempting the repair than delaying the repair, then the repairs may be delayed until the next process unit shutdown. A report must be supplied with the repair date and associated information, or the reason for the delay if the repairs are not completed within the 15-day period. These response requirements are specific to 40 CFR 63, specifically 63.453(k)(6), 63.453(l)(3), and 63.964(b)(1-2). Documentation of all repair attempts made and any leaks/defects requiring a process unit shutdown must be completed according to 63.454(b)(6-11).

I certify that the results of the Annual Method 21 Testing, Negative-Pressure Certification, and Visual inspection are accurate and complete to the best of my knowledge.

Inspector Name: Josh Howard

Signature: Josh Howard

Daily Calibration Sheet ENVIRONMENTAL 360

Name: Josh Howard

Company: Environmental 360, Inc.

Date: 5/4/2021

Time: 9:26Am

Client Name: NewIndy Containerboard
Closed-Vent and Condensate-Collection Systems Catawba
Method 21 Testing

VOC Analyzer Model #: TVA2020-A2S1B1
VOC Analyzer Serial #: 2020506799

		Expiration Date:	Lot#:	Actual Value:
Zero Gas Concentration:	Zero Grade Air	9/24/24	304-401906627-1	<0.1
Span Gas Concentration:	500 PPM Methane	5/01/24	304-401804749-1	506
Span Gas Concentration:	<10,000 PPM Methane	11/20/24	304-401969514-1	9989

Cylinder calibration gases must be analyzed and certified by the manufacturer within 2% accuracy.

	Reading	Actual Value	Precision (%)
500 PPM Methane Calibration Precision 1:	499	506	1
500 PPM Methane Calibration Precision 2:	498	506	2
500 PPM Methane Calibration Precision 3:	497	506	2
500 PPM Methane Calibration Precision 1 w/ Tubing:	483	506	5
500 PPM Methane Calibration Precision 2 w/ Tubing:	489	506	3
500 PPM Methane Calibration Precision 3 w/ Tubing:	488	506	4
<10,000 PPM Methane Calibration Precision 1:	9993	9989	0
<10,000 PPM Methane Calibration Precision 2:	9983	9988	0
<10,000 PPM Methane Calibration Precision 3:	9984	9989	1
<10,000 PPM Methane Calibration Precision 1 w/ Tubing:	9964	9989	0
<10,000 PPM Methane Calibration Precision 2 w/ Tubing:	9950	9989	0
<10,000 PPM Methane Calibration Precision 3 w/ Tubing:	9996	9989	0

The Calibration Precision must **not** have variability greater than 10%.

Response Factor: 1

The Response Factor must **not** be greater than 10.

Response Time: 3 sec

Response Time with 20 Ft. Extension Tubing: 8 sec

The Response Time must **not** be greater than 30 seconds. All probes and extensions used during the testing must be attached while measuring the response time.

Calibration Check: 481/506 = 5 %
Calibration Check Time: 6:39 PM

Comments:

I certify that calibration occurred prior to use and that all regulations and requirements were met.

Signed: Jsh

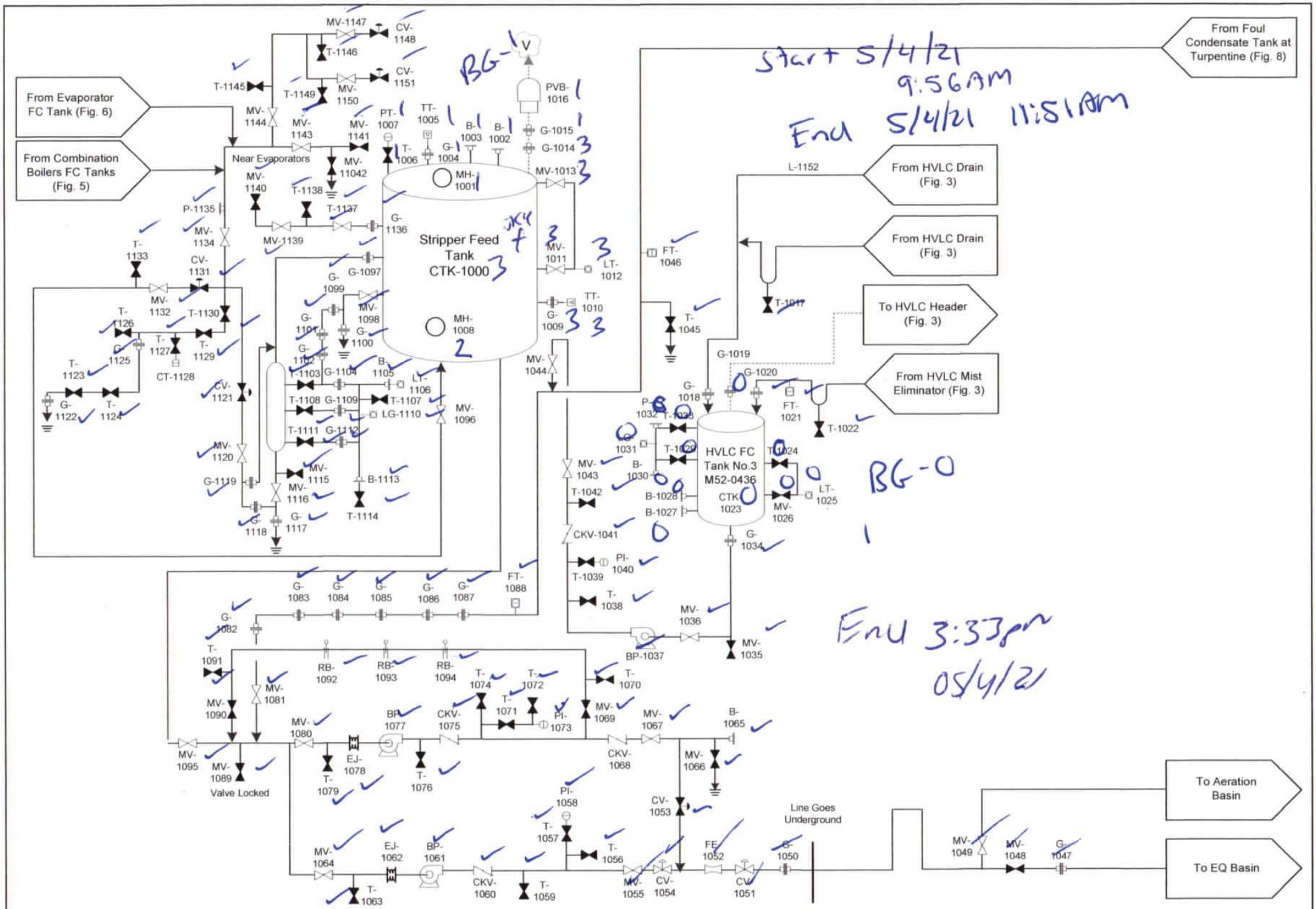

Vent Gases Condensates Liquor/Stock Lines Process Lines	To Another Page and Indicated Equipment From Another Page and Indicated Equipment	ENVIRONMENTAL 360	New Indy Containerboard – Catawba Mill LDAR Inspection and Testing Diagrams Stripper System Foul Condensate

Rev. Date March 2021

Figure 1

Stripper System Foul Condensate
Completed Date/Time: 5/4/2021 3:33PM

Number	Type	Pressure (+/-)	Background	VOC Reading	Is Component Free of Leaks or Defects?	Comments
1000	CTK	Cond	1	3	yes	
1001	MH			1	Y	
1002	B			1	Y	
1003	B			1	Y	
1004	G			1	Y	
1005	TT			1	Y	
1006	T			1	Y	
1007	PT			1	Y	
1008	MH			2	Y	
1009	G			3	Y	
1010	TT			3	Y	
1011	MV			3	Y	
1012	LT			3	Y	
1013	MV			3	Y	
1014	G			3	Y	
1015	G			1	Y	
1016	PVB			1	Y	
1017	T	Cond			Y	
1018	G				Y	
1019	G				Y	
1020	G		0.	0	Y	
1021	FT	Cond			Y	
1022	T				Y	
1023	CTK		0	0	Y	
1024	T	Cond	1	3	Y	
1025	LT	Cond	1	1	Y	
1026	MV	Cond	1	1	Y	
1027	B	Cond	0	0	Y	
1028	B		0	0	Y	
1029	T		0	0	Y	
1030	B		0	0	Y	
1031	LG		0	0	Y	
1032	P		0	0	Y	
1033	T		0	0	Y	
1034	G				Y	
1035	MV				Y	
1036	MV				Y	
1037	BP				Y	
1038	T				Y	
1039	T				Y	
1040	PI				Y	
1041	CKV				Y	
1042	T				Y	
1043	MV				Y	
1044	MV				Y	
1045	T				Y	
1046	FT				Y	
1047	G				Y	
1048	MV				Y	
1049	MV				Y	
1050	G				Y	
1051	CV				Y	
1052	FE				Y	
1053	CV				Y	
1054	CV				Y	
1055	MV				Y	
1056	T				Y	
1057	T				Y	
1058	PI				Y	
1059	T				Y	
1060	CKV				Y	
1061	BP				Y	
1062	EJ				Y	
1063	T				Y	
1064	MV				Y	
1065	B				Y	
1066	MV				Y	
1067	MV				Y	
1068	CKV				Y	
1069	MV				Y	
1070	T				Y	
1071	T				Y	
1072	T				Y	
1073	PI				Y	
1074	T				Y	
1075	CKV	Cond			yes	
1076	T				Y	
1077	BP				Y	
1078	EJ				Y	
1079	T				Y	
1080	MV				Y	
1081	MV				Y	
1082	G				Y	
1083	G				Y	
1084	G				Y	
1085	G				Y	
1086	G				Y	
1087	G				Y	
1088	FT				Y	
1089	MV				Y	
1090	MV				Y	
1091	T				Y	
1092	RB				Y	
1093	RB				Y	
1094	RB				Y	
1095	MV				Y	
1096	MV				Y	
1097	G				Y	
1098	MV				Y	
1099	G				Y	
1100	G				Y	
1101	G				Y	
1102	G				Y	
1103	T				Y	
1104	G				Y	
1105	B				Y	
1106	LT				Y	
1107	T				Y	
1108	T				Y	
1109	G				Y	
1110	LG				Y	
1111	T				Y	
1112	G				Y	
1113	B				Y	
1114	T				Y	
1115	MV				Y	
1116	MV				Y	
1117	G				Y	
1118	G				Y	
1119	G				Y	
1120	MV				Y	
1121	CV				Y	
1122	G				Y	
1123	T				Y	
1124	T				Y	
1125	G				Y	
1126	T				Y	
1127	T				Y	
1128	CT				Y	
1129	T				Y	
1130	T				Y	
1131	CV				Y	
1132	MV				Y	
1133	T				Y	
1134	MV				Y	
1135	P				Y	
1136	G				Y	
1137	T				Y	
1138	T				Y	
1139	MV				Y	
1140	MV				Y	
1141	MV				Y	
1142	MV				Y	
1143	MV				Y	
1144	MV				Y	
1145	T				Y	
1146	T				Y	
1147	MV				Y	
1148	CV				Y	
1149	T				Y	
1150	MV				Y	
1151	CV				Y	
1152	L	NA			Y	

Stripper Feed Tank
Completed Date/Time: 5/4/2021 / ND

Number	Type	Pressure (+/-)	Background	VOC Reading	Is Component Free of Leaks or Defects?	Comments
2000	G				yes	
2001	T				Y	
2002	MV				Y	
2003	T				Y	
2004	CV				Y	
2005	CV				Y	
2006	MV				Y	
2007	T				Y	
2008	T				Y	
2009	T				Y	
2010	PT				Y	
2011	PT				Y	
2012	RD				Y	
2013	CV				Y	
2014	T				Y	
2015	T				Y	
2016	T				Y	
2017	PI				Y	
2018	P				Y	
2019	FA				Y	
2020	P				Y	
2021	T				Y	
2022	T				Y	failed smoke
2023	PI				Y	
2024	TI				Y	
2025	MV				Y	
2026	T				Y	
2027	L				Y	

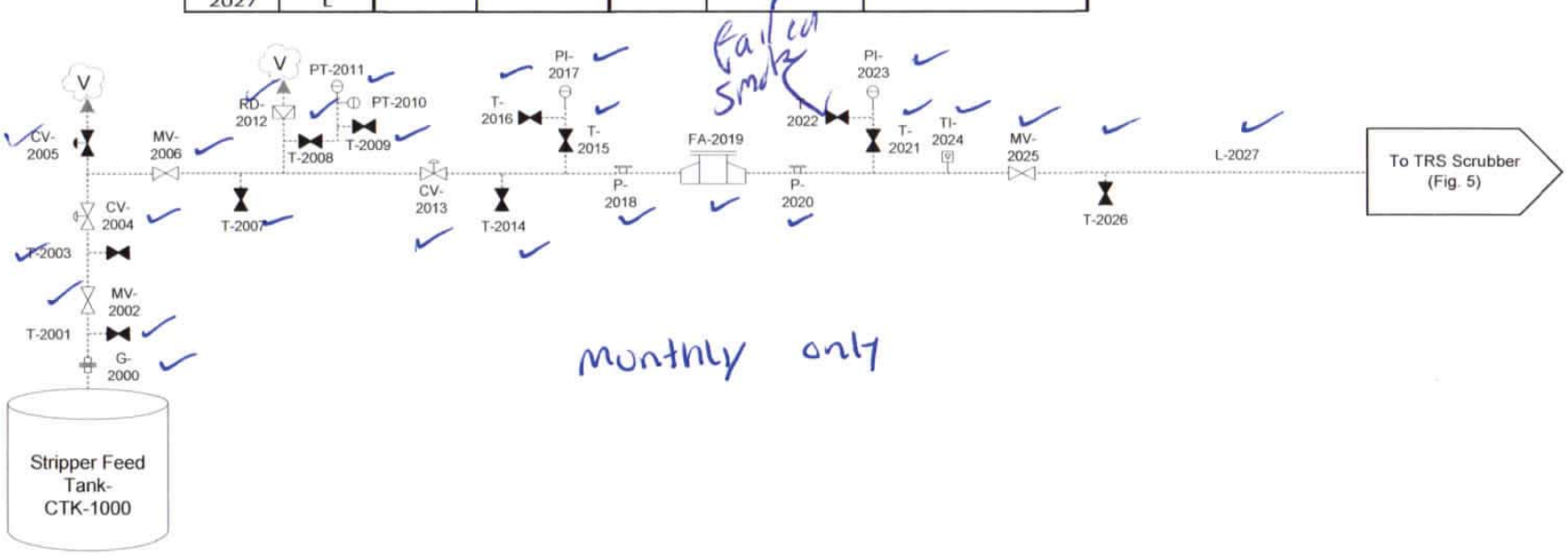

monthly only

Vent Gases Condensates Liquor/Stock Lines Process Lines	To Another Page and Indicated Equipment From Another Page and Indicated Equipment	ENVIRONMENTAL 360	New Indy Containerboard – Catawba Mill LDAR Inspection and Testing Diagrams Stripper Feed Tank	Rev. Date March 2021 Figure 2

Combination Boiler HVLC Incinerator
Completed Date/Time: 05/4/21 10:42 AM

Number	Type	Pressure (+/-)	Background	VOC Reading	Is Component Free of Leaks or Defects?	Comments
3000	EJ				yes	monthly visual
3001	MV				Y	
3002	P				Y	
3003	T				Y	
3004	PI				Y	
3005	FA				Y	
3006	T				Y	
3007	PI				Y	
3008	G				Y	
3009	TT				Y	
3010	P				Y	
3011	EJ				Y	
3012	MV				Y	
3013	T				Y	
3014	PI				Y	
3015	FA				Y	
3016	T				Y	
3017	PI	+	3	84	Y	
3018	EJ			14	Y	
3019	TT			8	Y	
3020	MV			42	Y	
3021	T			18	Y	
3022	PI			25	Y	
3023	FA			18	Y	
3024	T			16	Y	
3025	PI				Y	
3026	EJ	+	3	3	yes	
3027	MV			7	Y	
3028	P			9	Y	
3029	T			24	Y	
3030	PI			38	Y	
3031	FA			27	Y	
3032	T			18	Y	
3033	PI			13	Y	
3034	CV			0	Y	
3035	MV			0	Y	
3036	T			0	Y	
3037	PT			0	Y	
3038	MV			0	Y	
3039	RD			0	Y	
3040	CV			0	Y	
3041	MV	+		0	Y	
3042	CV	Check			Y	visual / monthly
3043	G			2	Y	
3044	TT			3	Y	
3045	P			3	Y	
3046	P			2	Y	
3047	G			2	Y	
3048	G			0	Y	
3049	P			0	Y	
3050	ME			0	Y	
3051	P			0	Y	
3052	G			0	Y	
3053	G	Conn NB			Y	
3054	L				Y	

Start 5/4/21 10:19AM
End 10:42AM

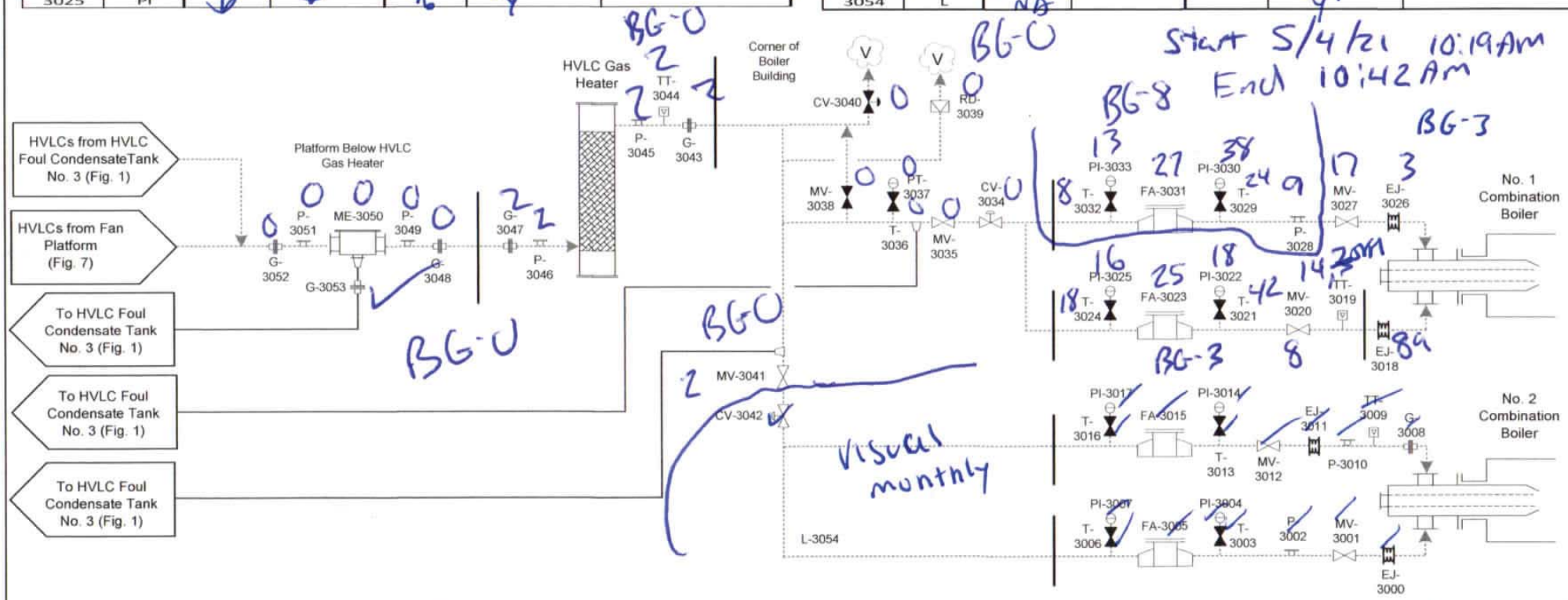

Vent Gases
Condensates
Liquor/Stock Lines
Process Lines
To Another Page and Indicated Equipment
From Another Page and Indicated Equipment

ENVIRONMENTAL 360

New Indy Containerboard – Catawba Mill

LDAR Inspection and Testing Diagrams
Combination Boiler HVLC Incineration

Rev. Date March 2021

Figure 3

Start 11:34AM 05/04/21

BG-0

Combination Boiler LVHC Incineration

Completed Date/Time: 5/4/21 11:39AM

Number	Type	Pressure (+/-)	Background	VOC Reading	Is Component Free of Leaks or Defects?	Comments
4000	G	+	0	0	yes	
4001	EJ			0	Y	
4002	MV			0	Y	
4003	T			0	Y	
4004	PT			0	Y	
4005	TT			0	Y	
4006	P			0	Y	
4007	FA			0	Y	
4008	P			0	Y	
4009	T			0	Y	
4010	PT			1	Y	
4011	G				Y	monthly
4012	EJ				Y	
4013	MV				Y	
4014	T				Y	
4015	PT				Y	
4016	TT				Y	
4017	P				Y	
4018	FA				Y	
4019	P				Y	
4020	T				Y	
4021	PT				Y	
4022	L	NA			Y	

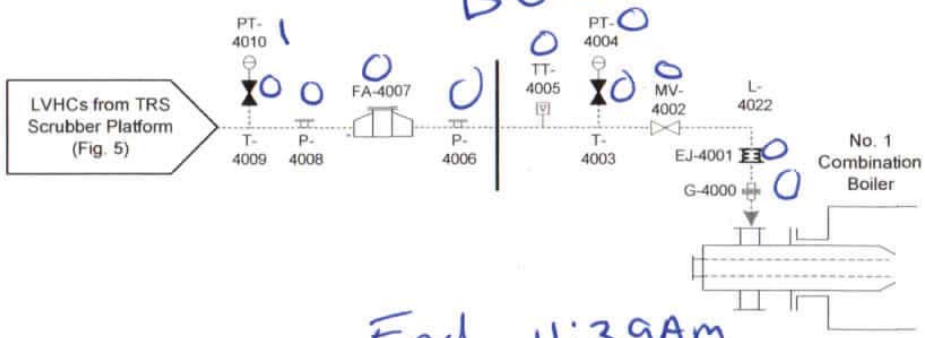

End 11:39AM 05/04/21

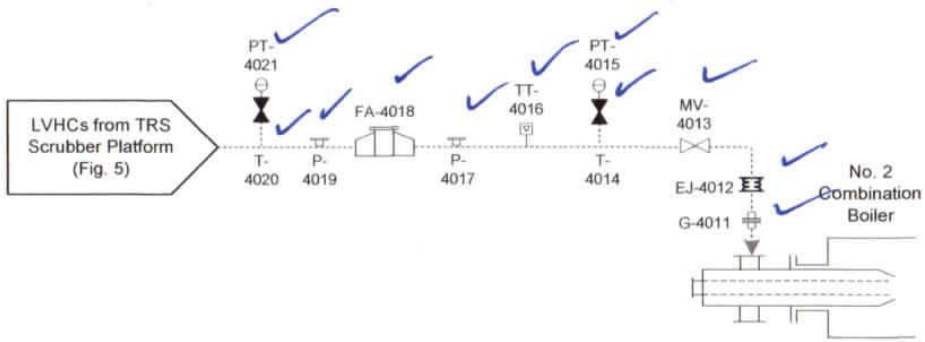

Vent Gases
Condensates
Liquor/Stock Lines
Process Lines

To Another Page and Indicated Equipment

From Another Page and Indicated Equipment

ENVIRONMENTAL 360

New Indy Containerboard – Catawba Mill

LDAR Inspection and Testing Diagrams

Combination Boiler LVHC Incineration

Rev. Date March 2021

Figure 4

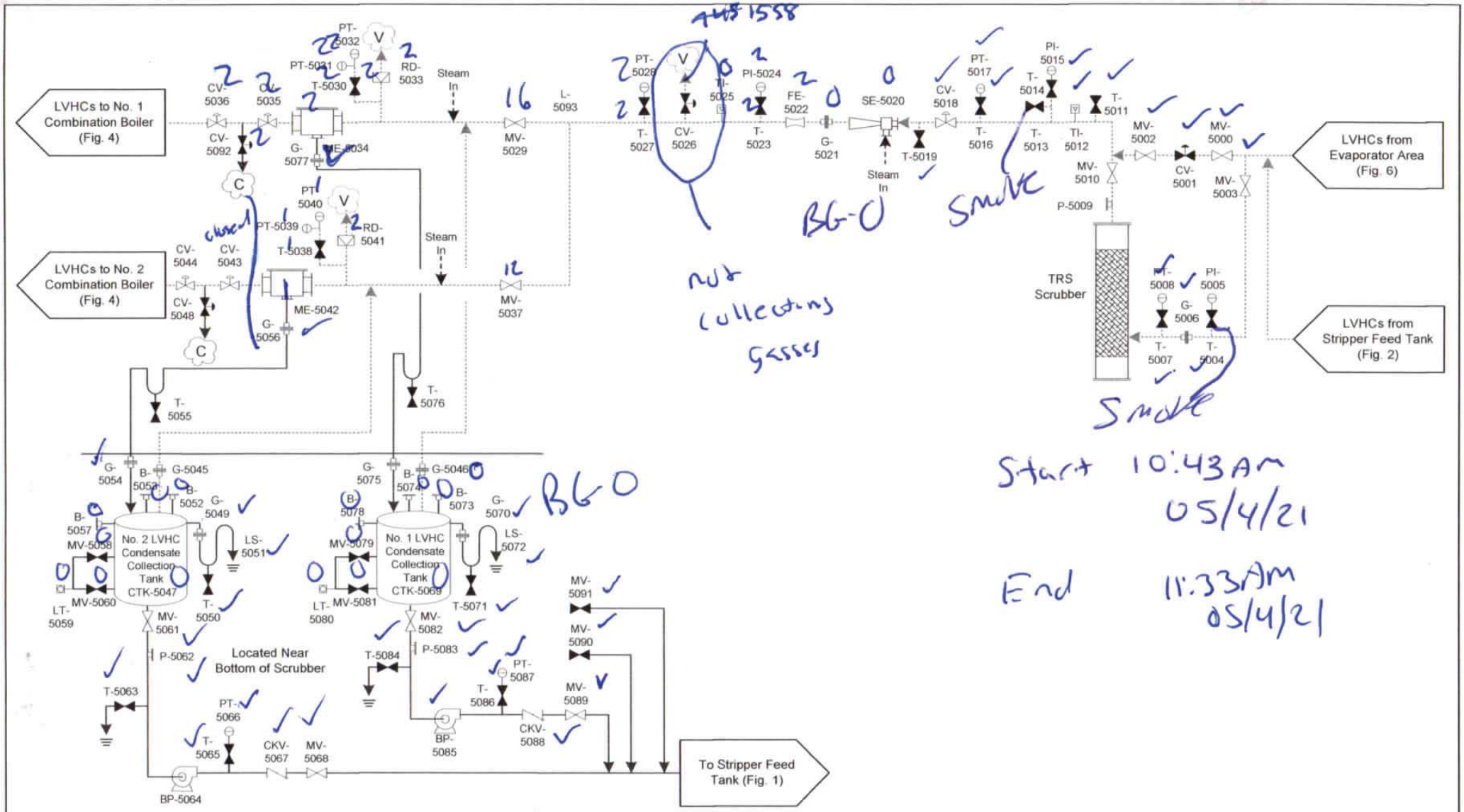

Vent Gases Condensates Liquor/Stock Lines Process Lines	To Another Page and Indicated Equipment From Another Page and Indicated Equipment	ENVIRONMENTAL 360	New Indy Containerboard – Catawba Mill LDAR Inspection and Testing Diagrams TRS Scrubber Platform	Rev. Date March 2021 Figure 5

TRS Scrubber Platform

Completed Date/Time: 5/4/21 11:33 AM

Number	Type	Pressure (+/-)	Background	VOC Reading	Is Component Free of Leaks or Defects?	Comments
5000	MV	—			yes	
5001	CV				Y	
5002	MV				Y	
5003	MV				Y	
5004	T				Y	Smoke
5005	PI				Y	
5006	G				Y	
5007	T				Y	
5008	PT				Y	
5009	P				Y	
5010	MV				Y	
5011	T				Y	
5012	TI				Y	
5013	T				Y	Smoke
5014	T				Y	
5015	PI				Y	
5016	T				Y	
5017	PT				Y	
5018	CV				Y	
5019	T				Y	
5020	SE	+	0	0	Y	
5021	G			0	Y	
5022	FE			2	Y	
5023	T			2	Y	
5024	PI			2	Y	
5025	TI			0	Y	
5026	CV			1558	NO	Not collecting gasses
5027	T			2	yes	
5028	PT			2	Y	
5029	MV			16	Y	
5030	T			2	Y	
5031	PT			2	Y	
5032	PT			2	Y	
5033	RD			2	Y	
5034	ME			2	Y	
5035	CV			2	Y	
5036	CV			2	Y	
5037	MV			12	Y	
5038	T			1	Y	
5039	PT			1	Y	
5040	PT			1	Y	
5041	RD			2	Y	
5042	ME			1	Y	
5043	CV		JM		Y	Visual monthly
5044	CV				Y	
5045	G		0		yes	
5046	G	+	0		Y	
5047	CTK	cont			Y	
5048	CV	cont			Y	
5049	G				Y	
5050	T				Y	
5051	LS				Y	
5052	B		0		Y	
5053	B		0		Y	
5054	G				Y	
5055	T				Y	
5056	G				Y	
5057	B		0		Y	
5058	MV		0		Y	
5059	LT		0		Y	
5060	MV		0		Y	
5061	MV				Y	
5062	P				Y	
5063	T				Y	
5064	BP				Y	
5065	T				Y	
5066	PT				Y	
5067	CKV				Y	
5068	MV				Y	
5069	CTK		0		Y	
5070	G				Y	
5071	T				Y	
5072	LS				Y	
5073	B		0		Y	
5074	B		0		Y	
5075	G				Y	
5076	T				Y	
5077	G		JK7		Y	
5078	B		0		Y	
5079	MV		0		Y	
5080	LT		0		Y	
5081	MV		0		Y	
5082	MV				Y	
5083	P				Y	
5084	T				Y	
5085	BP				Y	
5086	T				Y	
5087	PT				Y	
5088	CKV				Y	
5089	MV				Y	
5090	MV				Y	
5091	MV				Y	
5092	CV	cont			Y	
5093	L	NA			Y	

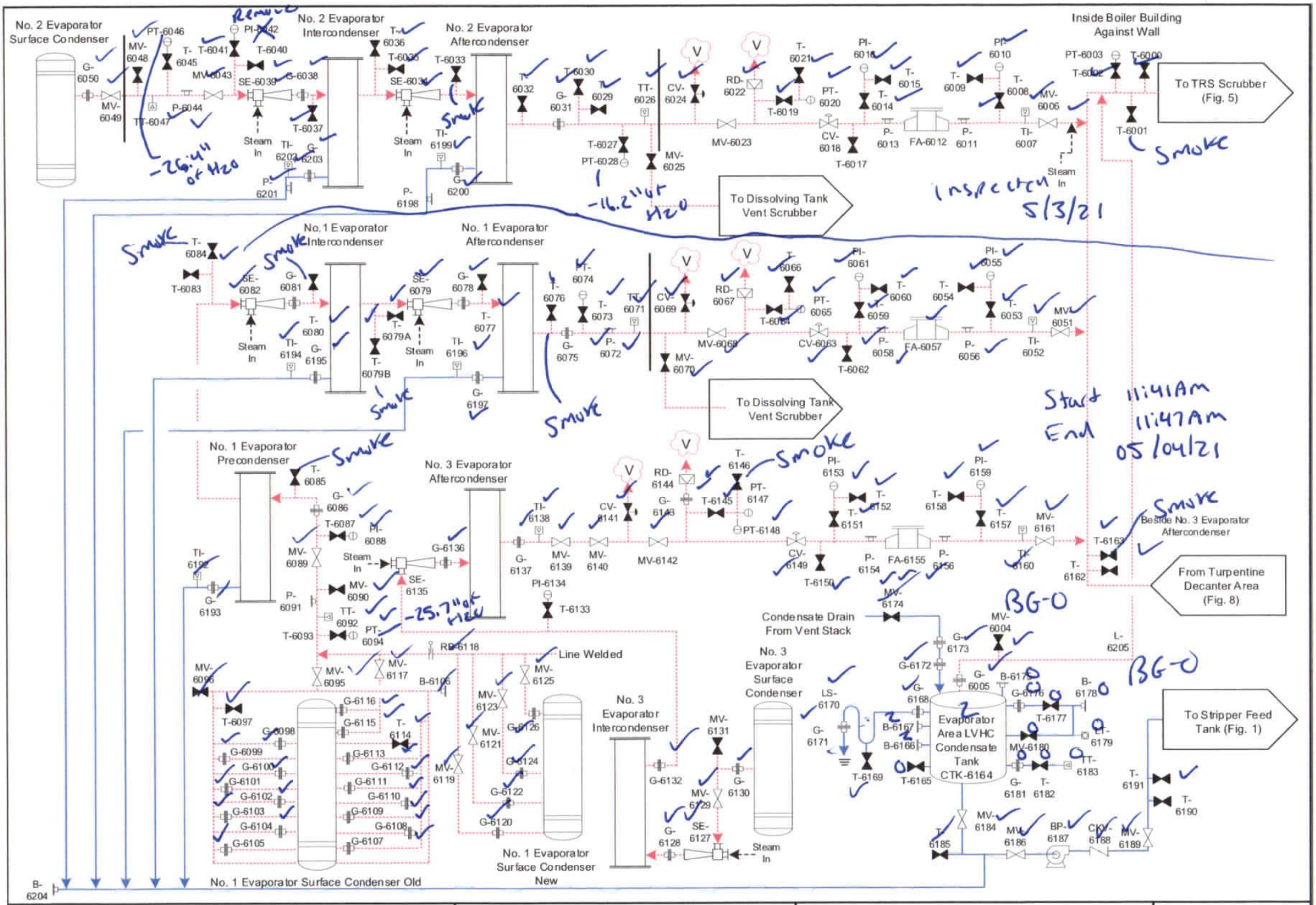

Vent Gases
Condensates
Liquor/Stock Lines
Process Lines

To Another Page and Indicated Equipment

From Another Page and Indicated Equipment

ENVIRONMENTAL 360

New Indy Containerboard – Catawba Mill

LDAR Inspection and Testing Diagrams

Evaporator System

Rev. Date March 2021

Figure 6

Evaporator System

Completed Date/Time: ~~5/3/21~~ JKN 5/4/21 11:47 Am

Number	Type	Pressure (+/-)	Background	VOC Reading	Is Component Free of Leaks or Defects?	Comments
6000	T	—			yes	
6001	T				Y	Smoke
6002	T				Y	
6003	PT				Y	
6004	MV				Y	
6005	G				Y	
6006	MV				Y	
6007	TI				Y	
6008	T				Y	
6009	T				Y	
6010	PI				Y	
6011	P				Y	
6012	FA				Y	
6013	P				Y	
6014	T				Y	
6015	T				Y	
6016	PI				Y	
6017	T				Y	
6018	CV				Y	
6019	T				Y	
6020	PT				Y	
6021	T				Y	
6022	RD				Y	
6023	MV				Y	
6024	CV				Y	
6025	MV				Y	
6026	TT				Y	
6027	T				Y	
6028	PT				Y	-26.2" of H2O
6029	T				Y	
6030	T				Y	
6031	G				Y	
6032	T				Y	
6033	T				Y	Smoke
6034	SE				Y	
6035	T				Y	
6036	T				Y	
6037	T				Y	
6038	G				Y	
6039	SE				Y	
6040	T				Y	
6041	T				Y	
6042	PI					Remove
6043	MV	—			yes	
6044	P				Y	
6045	T				Y	
6046	PT				Y	-26.4" of H2O
6047	TT				Y	
6048	MV				Y	
6049	MV	—			yes	
6050	G				Y	
6051	MV				Y	
6052	TI				Y	
6053	T				Y	
6054	T				Y	
6055	PI				Y	
6056	P				Y	
6057	FA				Y	
6058	P				Y	
6059	T				Y	
6060	T				Y	
6061	PI				Y	
6062	T				Y	
6063	CV				Y	
6064	T				Y	
6065	PT				Y	
6066	T				Y	
6067	RD				Y	
6068	MV				Y	
6069	CV				Y	
6070	MV				Y	
6071	TT				Y	
6072	P				Y	
6073	T				Y	
6074	PT				Y	
6075	G				Y	
6076	T				Y	Smoke
6077	T				Y	
6078	G				Y	
6079	SE				Y	
6079A	T				Y	
6079B	T				Y	Smoke
6080	T				Y	
6081	G				Y	Smoke
6082	SE				Y	
6083	T				Y	
6084	T				Y	Smoke
6085	T				Y	Smoke
6086	G				Y	
6087	T				Y	
6088	PI				Y	
6089	MV				Y	
6090	MV				Y	
6091	P				Y	
6092	TT				Y	
6093	T				Y	
6094	PT				Y	-25.7" of H2O
6095	MV				Y	
6096	MV				Y	
6097	T				Y	
6098	G				Y	
6099	G					

Evaporator System
Completed Date/Time: 5/4/21 11:47AM

Number	Type	Pressure (+/-)	Background	VOC Reading	Is Component Free of Leaks or Defects?	Comments
6100	G	—			yes	
6101	G				Y	
6102	G				Y	
6103	G				Y	
6104	G				Y	
6105	G				Y	
6106	B				Y	
6107	G				Y	
6108	G				Y	
6109	G				Y	
6110	G				Y	
6111	G				Y	
6112	G				Y	
6113	G				Y	
6114	T				Y	
6115	G				Y	
6116	G				Y	
6117	MV				Y	
6118	RB				Y	
6119	MV				Y	
6120	G				Y	
6121	MV				Y	
6122	G				Y	
6123	MV				Y	
6124	G				Y	
6125	MV				Y	
6126	G				Y	
6127	SE				Y	
6128	G				Y	
6129	MV				Y	
6130	G				Y	
6131	MV				Y	
6132	G				Y	
6133	T				Y	
6134	PI				Y	
6135	SE				Y	
6136	G				Y	
6137	G				Y	
6138	TI				Y	
6139	MV				Y	
6140	MV				Y	
6141	CV				Y	
6142	MV				Y	
6143	G				Y	
6144	RD				Y	
6145	T				Y	smoke
6146	T				Y	26.4 psi
6147	PT				Y	
6148	PT				Y	
6149	CV				Y	
6150	T				Y	
6151	T				Y	
6152	T				Y	
6153	PI	—			yes	
6154	P				Y	
6155	FA				Y	
6156	P				Y	
6157	T				Y	
6158	T				Y	
6159	PI				Y	
6160	TI				Y	
6161	MV				Y	
6162	T				Y	
6163	T				Y	smoke
6164	CTK	cond	0	2	Y	
6165	T			0	Y	
6166	B			2	Y	
6167	B			2	Y	
6168	G				Y	
6169	T				Y	
6170	LS				Y	
6171	G				Y	
6172	G				Y	
6173	G				Y	
6174	MV				Y	
6175	B			0	Y	
6176	G			0	Y	
6177	T			6	Y	
6178	B			0	Y	
6179	LT			0	Y	
6180	MV			0	Y	
6181	G			8	Y	
6182	T			8	Y	
6183	TT			0	Y	
6184	MV				Y	
6185	T				Y	
6186	MV				Y	
6187	BP				Y	
6188	CKV				Y	
6189	MV				Y	
6190	T				Y	
6191	T				Y	
6192	TI				Y	
6193	G				Y	
6194	TI				Y	
6195	G				Y	
6196	TI				Y	
6197	G				Y	
6198	P				Y	
6199	TI				Y	
6200	G				Y	
6201	P				Y	
6202	TI				Y	
6203	G				Y	
6204	B				Y	
6205	L				Y	

Start 12:00PM 05/04/21

End 12:16PM

BGO

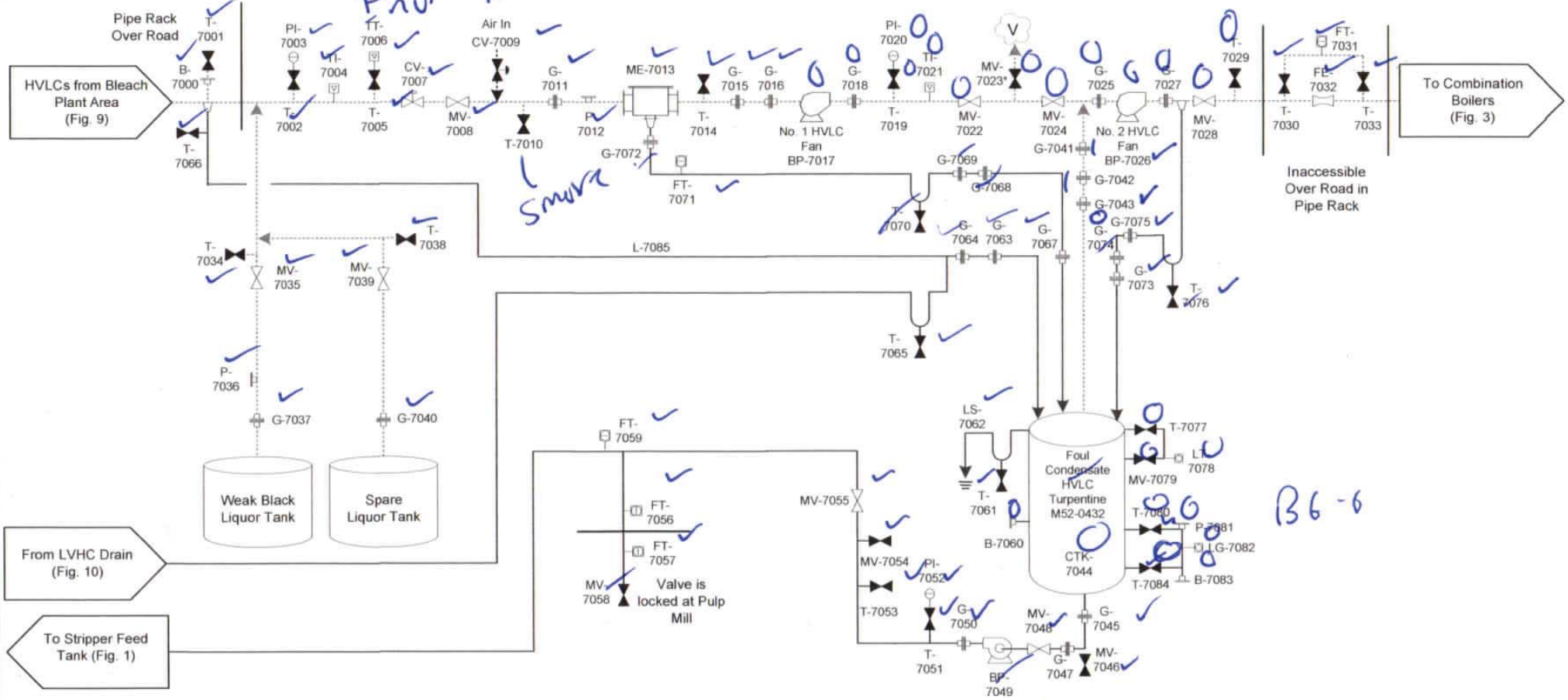

BG-6

End 3:49pm 05/07/21

* Indicates car seal present

Vent Gases Condensates Liquor/Stock Lines Process Lines	To Another Page and Indicated Equipment From Another Page and Indicated Equipment	ENVIRONMENTAL 360	New Indy Containerboard – Catawba Mill LDAR Inspection and Testing Diagrams HVLC Blower Platform
			Rev. Date March 2021 Figure 7

HVLC Blower Platform

Completed Date/Time: JM 5/4/21 5/7/21 3:44pm

Number	Type	Pressure (+/-)	Background	VOC Reading	Is Component Free of Leaks or Defects?	Comments
7000	B	—			yes	
7001	T	—			Y	
7002	T				Y	
7003	PI				Y	
7004	TI				Y	
7005	T				Y	
7006	TT				Y	
7007	CV				Y	
7008	MV				Y	
7009	CV				Y	
7010	T				Y	Smoke
7011	G				Y	
7012	P				Y	
7013	ME				Y	
7014	T				Y	
7015	G				Y	
7016	G				Y	
7017	BP	+	0	0	Y	
7018	G			0	Y	
7019	T			0	Y	
7020	PI			0	Y	
7021	TI			0	Y	
7022	MV			0	Y	
7023	MV			0	Y	Car seal present
7024	MV			0	Y	
7025	G			0	Y	
7026	BP			0	Y	
7027	G			0	Y	
7028	MV			0	Y	
7029	T			0	Y	
7030	T				Y	Inaccessible
7031	FT				Y	
7032	FE				Y	
7033	T				Y	
7034	T	—			Y	
7035	MV	—			Y	
7036	P	—			Y	
7037	G	—			Y	
7038	T	—			Y	
7039	MV	—			Y	
7040	G	—			yes	
7041	G	+	0	1	Y	
7042	G	+	0	1	Y	
7043	G	+	0	0	Y	
7044	CTK	cond	0	0	Y	
7045	G				Y	
7046	MV				Y	
7047	G				Y	
7048	MV				Y	
7049	BP				Y	
7050	G				Y	
7051	T				Y	
7052	PI				Y	
7053	T				Y	
7054	MV				Y	
7055	MV				Y	
7056	FT				Y	
7057	FT				Y	
7058	MV				Y	
7059	FT				Y	
7060	B		0	0	Y	
7061	T				Y	
7062	LS				Y	
7063	G				Y	
7064	G				Y	
7065	T				Y	
7066	T				Y	
7067	G				Y	
7068	G				Y	
7069	G				Y	
7070	T				Y	
7071	FT				Y	
7072	G				Y	
7073	G				Y	
7074	G				Y	
7075	G				Y	
7076	T				Y	
7077	T		0	0	Y	
7078	LT		0	0	Y	
7079	MV		0	0	Y	
7080	T		0	0	Y	
7081	P		0	0	Y	
7082	LG		0	0	Y	
7083	B		0	0	Y	
7084	T		0	0	Y	
7085	L	NB			Y	

Turpentine Decanter and Standpipe

Completed Date/Time: 5/7/21 4:33PM

Number	Type	Pressure (+/-)	Background	VOC Reading	Is Component Free of Leaks or Defects?	Comments
8000	T	—			yes	
8001	G				Y	
8002	EJ				Y	
8003	G				Y	
8004	PI				Y	
8005	T				Y	
8006	T				Y	
8007	MV				Y	
8008	TI				Y	
8009	P				Y	
8010	FA				Y	
8011	P				Y	
8012	T				Y	
8013	T				Y	
8014	T				Y	smoke
8015	PI				Y	
8016	CV				Y	
8017	T				Y	
8018	T				Y	
8019	PT				Y	
8020	PT				Y	
8021	RD				Y	
8022	MV				Y	
8023	CV				Y	
8024	MV				Y	
8025	G				Y	
8026	MV				Y	
8027	MV				Y	
8028	PVB				Y	
8029	G				Y	
8030	EJ	—			yes	
8031	G				Y	
8032	PI				Y	
8033	T				Y	
8034	T				Y	
8035	TI				Y	
8036	MV				Y	
8037	P				Y	
8038	FA				Y	
8039	P				Y	
8040	T				Y	
8041	T				Y	
8042	PI				Y	remove
8043	T				yes	
8044	T				Y	
8045	CV				Y	
8046	T				Y	
8047	T				Y	remove
8048	T				yes	smoke
8049	T				Y	
8050	PT				Y	
8051	PT				Y	
8052	RD				Y	
8053	MV				Y	
8054	CV				Y	
8055	G				Y	
8056	G				Y	
8057	T				Y	
8058	TT				Y	
8059	MV				Y	
8060	MV				Y	
8061	MV				Y	
8062	MV				Y	
8063	L				Y	

Comp NIP

End 4:33PM 05/7/21

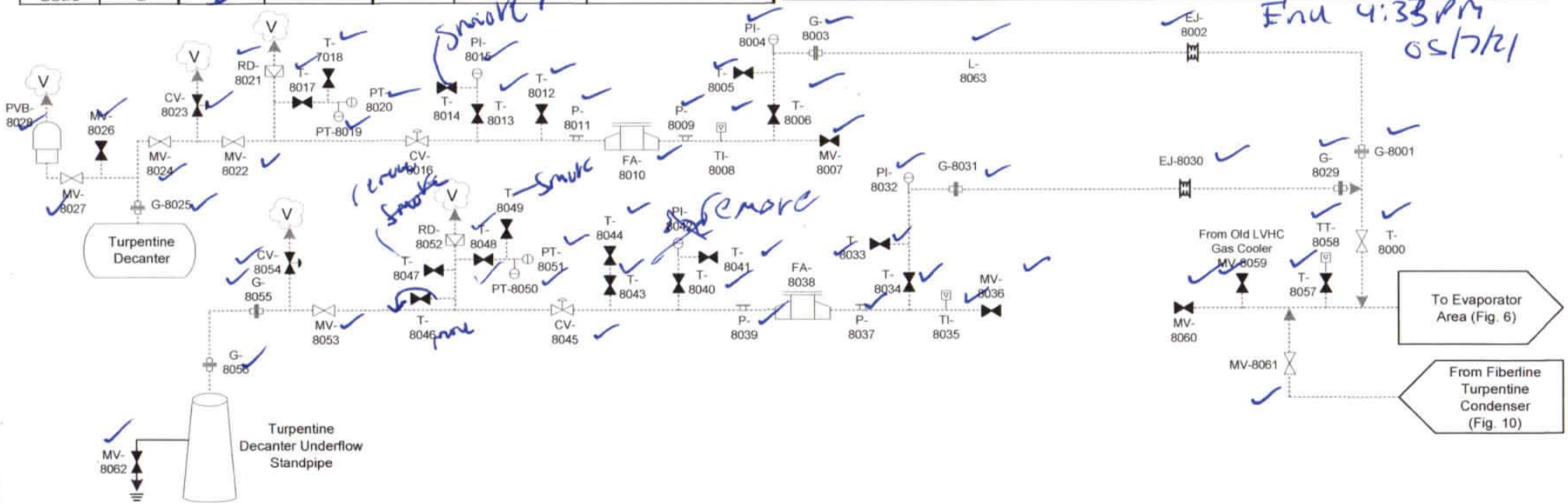

Vent Gases	To Another Page and Indicated Equipment	
Condensates		
Liquor/Stock Lines	From Another Page and Indicated Equipment	
Process Lines		

ENVIRONMENTAL 360

New Indy Containerboard – Catawba Mill

LDAR Inspection and Testing Diagrams
Turpentine Decanter and Standpipe

Rev. Date March 2021

Figure 8

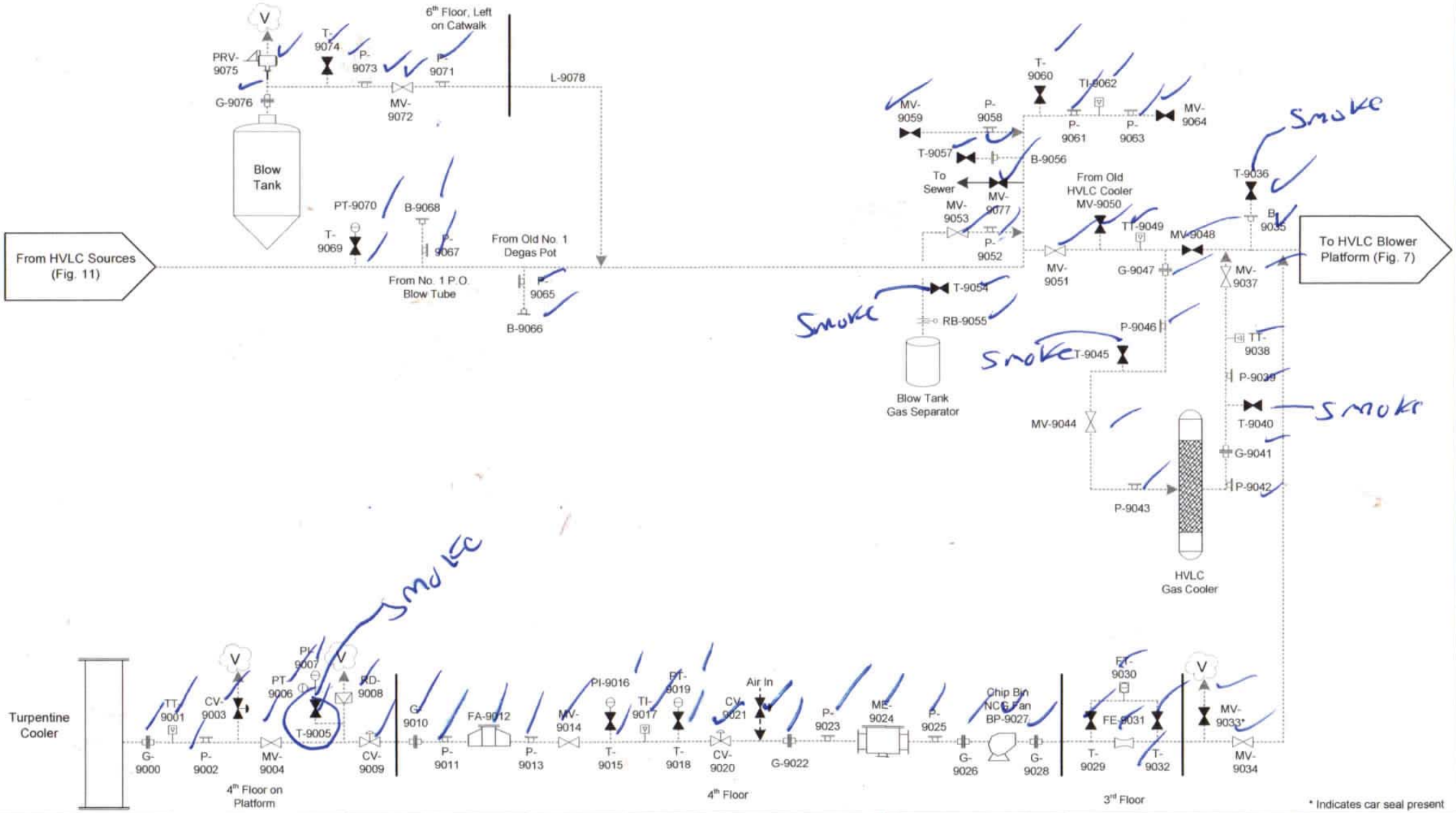

Vent Gases Condensates Liquor/Stock Lines Process Lines	To Another Page and Indicated Equipment From Another Page and Indicated Equipment	ENVIRONMENTAL 360	New Indy Containerboard – Catawba Mill LDAR Inspection and Testing Diagrams Turpentine Cooler and Blow Tank
			Rev. Date March 2021 Figure 9

Turpentine Cooler and Blow Tank

Completed Date/Time: 5/3/21 / NH

Number	Type	Pressure (+/-)	Background	VOC Reading	Is Component Free of Leaks or Defects?	Comments
9000	G	–			yes	
9001	TT				Y	
9002	P				Y	
9003	CV				Y	
9004	MV				Y	
9005	T				Y	Smoke
9006	PT				Y	
9007	PI				Y	
9008	RD				Y	
9009	CV				Y	
9010	G				Y	
9011	P				Y	
9012	FA				Y	
9013	P				Y	
9014	MV				Y	
9015	T				Y	
9016	PI				Y	
9017	TI				Y	
9018	T				Y	
9019	PT				Y	
9020	CV				Y	
9021	CV				Y	
9022	G				Y	
9023	P				Y	
9024	ME				Y	
9025	P				Y	
9026	G				Y	
9027	BP				Y	monthly/visual
9028	G				Y	
9029	T				Y	
9030	FT				Y	
9031	FE				Y	
9032	T				Y	
9033	MV				Y	Car seal present
9034	MV				Y	monthly/visual
9035	B	–			Y	
9036	T	–			yes	smoke
9037	MV				Y	
9038	TT				Y	
9039	P				Y	
9040	T				Y	smoke
9041	G				Y	
9042	P				Y	
9043	P				Y	
9044	MV				Y	
9045	T				Y	smoke
9046	P				Y	
9047	G				Y	
9048	MV				Y	
9049	TT				Y	
9050	MV				Y	
9051	MV				Y	
9052	P				Y	
9053	MV				Y	
9054	T				Y	smoke
9055	RB				Y	
9056	B				Y	
9057	T				Y	
9058	P				Y	
9059	MV				Y	
9060	T				Y	
9061	P				Y	
9062	TI				Y	
9063	P				Y	
9064	MV				Y	
9065	P				Y	
9066	B				Y	
9067	P				Y	
9068	B				Y	
9069	T				Y	
9070	PT				Y	
9071	P				Y	
9072	MV				Y	
9073	P				Y	
9074	T				Y	
9075	PRV				Y	
9076	G				Y	
9077	MV	Cured			Y	
9078	L	NH			Y	

Turpentine Condenser and LVHC Gas Cooler

Completed Date/Time: 5/3/21 11:07 AM

Number	Type	Pressure (+/-)	Background	VOC Reading	Is Component Free of Leaks or Defects?	Comments
10000	RB	—			yes	
10001	TT				y	
10002	PI				y	
10003	P				y	
10004	G				y	
10005	P				y	
10006	P				y	
10007	FA				y	
10008	P				y	
10009	P				y	
10010	G				y	
10011	P				y	
10012	TT				y	
10013	CV	—			yes	
10014	MV				y	
10015	T				y	
10016	T				y	
10017	PT				y	
10018	RD				y	
10019	P				y	
10020	CV				y	
10021	T				y	
10022	T				y	
10023	PI				y	
10024	FA				y	
10025	P				y	
10026	MV				y	
10027	T				y	Smoke
10028	L	NA			y	

End 11:07AM 05/3/21

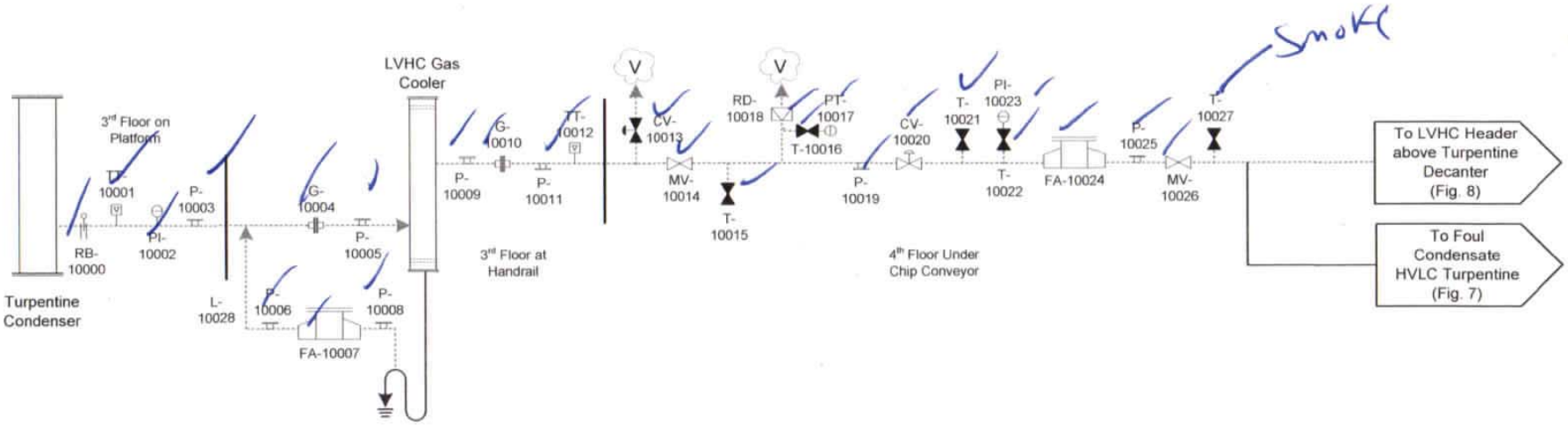

Vent Gases Condensates Liquor/Stock Lines Process Lines	To Another Page and Indicated Equipment From Another Page and Indicated Equipment	ENVIRONMENTAL 360	New Indy Containerboard – Catawba Mill LDAR Inspection and Testing Diagrams Turpentine Condenser and LVHC Gas Cooler	Rev. Date March 2021 Figure 10

HVLC System at Pulp Mil (1 of 2)

Completed Date/Time: 5/3/21 3:28 PM

Number	Type	Pressure (+/-)	Background	VOC Reading	Is Component Free of Leaks or Defects?	Comments
11000	P	—			yes	
11001	MV				y	
11002	P				y	
11003	T				y	smoke
11004	G				y	
11005	P				y	
11006	MV				y	
11007	P				y	
11008	B				y	
11009	T				y	
11010	P				y	
11011	MV				y	
11012	P				y	
11013	T				y	smoke
11014	P	—			yes	
11015	MV				y	
11016	P				y	
11017	T				y	smoke
11018	P				y	
11019	MV				y	
11020	P				y	
11021	T				y	
11022	G				y	
11023	P				y	
11024	MV				y	
11025	P				y	
11026	MV				y	
11027	T				y	smoke
11028	P				y	
11029	G				y	
11030	L	NA			y	

End 05/3/21 3:28pm

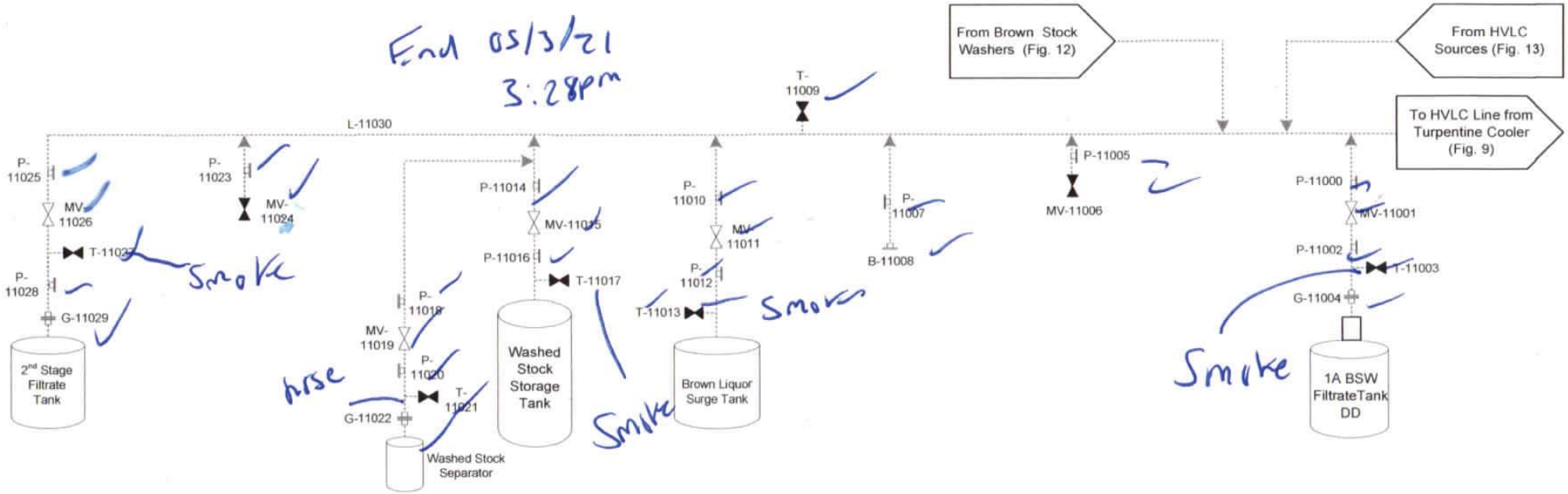

Vent Gases
Condensates
Liquor/Stock Lines
Process Lines

To Another Page and Indicated Equipment

From Another Page and Indicated Equipment

ENVIRONMENTAL 360

New Indy Containerboard – Catawba Mill

LDAR Inspection and Testing Diagrams
HVLC System at Pulp Mill (1 of 2)

Rev. Date March 2021

Figure 11

Pulp Mill BSWs

Completed Date/Time: 5/4/21 5:03pm

Number	Type	Pressure (+/-)	Background	VOC Reading	Is Component Free of Leaks or Defects?	Comments
12081	B	—			yes	
12082	B				Y	
12083	P				Y	
12084	B				Y	
12085	P				Y	
12086	B				Y	
12087	B				Y	
12088	B				Y	
12089	B				Y	
12090	T				Y	smok
12091	PI				Y	
12092	MV				Y	
12093	B				Y	
12094	G				Y	
12095	B				Y	
12096	MV				Y	
12097	B				Y	
12098	G				Y	
12099	MV				Y	
12100	G				Y	
12101	G				Y	
12102	BP				Y	
12103	G				Y	
12104	T				Y	
12105	MV				Y	
12106	G				Y	
12107	B				Y	
12108	T				Y	
12109	MV				Y	
12110	B				Y	
12111	T				Y	smoke
12112	G				Y	
12113	B				Y	
12114	T				Y	
12115	G				Y	
12116	G				Y	
12117	WSR				Y	
12118	P				Y	
12119	B				Y	
12120	B				Y	
12121	MV				Y	
12122	B				Y	
12123	G				Y	
12124	MV	—			yes	
12125	G				Y	
12126	G				Y	
12127	BP				Y	
12128	G				Y	
12129	T				Y	
12130	MV				Y	
12131	G				Y	
12132	B				Y	
12133	T				Y	
12134	MV				Y	
12135	B				Y	
12136	T				Y	smoke
12137	G				Y	
12138	G				Y	
12139	WSR				Y	
12140	B				Y	
12141	DV				Y	
12142	B				Y	
12143	G				Y	
12144	MV				Y	
12145	G				Y	
12146	G				Y	
12147	BP				Y	
12148	G				Y	
12149	T				Y	
12150	MV				Y	
12151	G				Y	
12152	B				Y	
12153	T				Y	
12154	MV				Y	
12155	B				Y	
12156	T				Y	smoke
12157	G				Y	
12158	G				Y	
12159	WSR				Y	
12160	P				Y	
12161	B				Y	
12162	RB				Y	
12163	T				Y	smoke
12164	MV				Y	
12165	P				Y	
12166	L	— NA			Y	

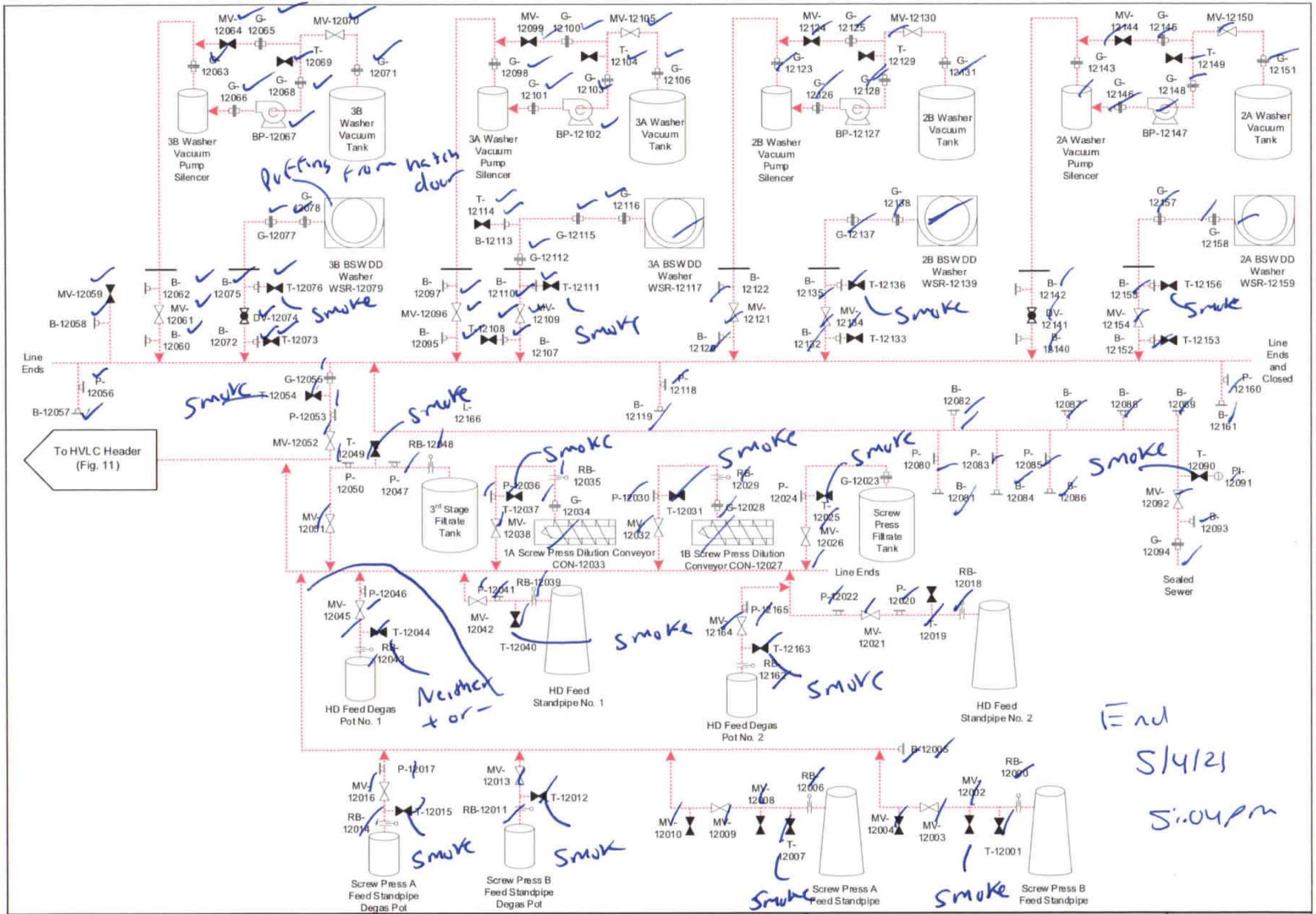

Vent Gases
Bleach Gases
Condensates
Liquor/Stock Lines
Process Lines

To Another Page and Indicated Equipment

From Another Page and Indicated Equipment

ENVIRONMENTAL 360

New Indy Containerboard – Catawba Mill

LDAR Inspection and Testing Diagrams
Pulp Mill BSWs

Rev. Date
March 2021

Figure 12

Pulp Mill BSWs

Completed Date/Time: 5/4/21 5:03pm

Number	Type	Pressure (+/-)	Background	VOC Reading	Is Component Free of Leaks or Defects?	Comments
12000	RB	—			yes	
12001	T				Y	
12002	MV				Y	Smoke
12003	MV				Y	
12004	MV				Y	
12005	B				Y	
12006	RB				Y	
12007	T				Y	Smoke
12008	MV				Y	
12009	MV				Y	
12010	MV				Y	
12011	RB				Y	
12012	T				Y	Smoke
12013	MV				Y	
12014	RB				Y	
12015	T				Y	Smoke
12016	MV				Y	
12017	P				Y	
12018	RB				Y	
12019	T				Y	
12020	P				Y	
12021	MV				Y	
12022	P				Y	
12023	G				Y	
12024	P				Y	
12025	T				Y	Smoke
12026	MV				Y	
12027	CON				Y	
12028	G				Y	
12029	RB				Y	
12030	P				Y	
12031	T				Y	Smoke
12032	MV				Y	
12033	CON				Y	
12034	G				Y	
12035	RB				Y	
12036	P				Y	
12037	T				Y	Smoke
12038	MV				Y	
12039	RB	—			yes	
12040	T				Y	Smoke
12041	P				Y	
12042	MV				Y	
12043	RB				Y	Monthly/
12044	T				Y	Visual
12045	MV				Y	
12046	P				Y	
12047	P	—			Y	
12048	RB				Y	
12049	T				Y	Smoke
12050	P				Y	
12051	MV				Y	
12052	MV				Y	
12053	P				Y	
12054	T				Y	Smoke
12055	G				Y	
12056	P				Y	
12057	B				Y	
12058	B				Y	
12059	MV				Y	
12060	B				Y	
12061	MV				Y	
12062	B				Y	
12063	G				Y	
12064	MV				Y	
12065	G				Y	
12066	G				Y	
12067	BP				Y	
12068	G				Y	
12069	T				Y	
12070	MV				Y	
12071	G				Y	
12072	B				Y	
12073	T				Y	
12074	DV				Y	
12075	B				Y	
12076	T				Y	Smoke
12077	G				Y	
12078	G				Y	
12079	WSR				NO	Puffing
12080	P				Yes	

HVLC System at Pulp Mil (2 of 2)

Completed Date/Time: 5/3/21 3:37pm

Number	Type	Pressure (+/-)	Background	VOC Reading	Is Component Free of Leaks or Defects?	Comments
13000	P	—			yes	
13001	MV				Y	
13002	P				Y	
13003	T				Y	Smoke
13004	PI					Remove
13005	G	—			yes	
13006	MV				Y	
13007	G				Y	
13008	BP				Y	
13009	T				Y	
13010	MV				Y	
13011	G				Y	
13012	P				Y	
13013	MV				Y	
13014	P				Y	
13015	T				Y	Smoke
13016	PI					Remove
13017	G	—			Y	
13018	MV				Y	
13019	G				Y	
13020	WSR				Y	
13021	T				Y	Smoke
13022	MV				Y	
13023	P				Y	
13024	MV				Y	
13025	P	—			yes	
13026	T				Y	Smoke
13027	MV				Y	
13028	G				Y	
13029	RB				Y	
13030	P				Y	
13031	MV				Y	
13032	T				Y	Smoke
13033	PI					Remove
13034	P	—			Y	
13035	MV				Y	
13036	G				Y	
13037	WSR				Y	
13038	P				Y	
13039	MV				Y	
13040	P				Y	
13041	T				Y	Smoke
13042	PI					Remove
13043	G	—			Y	
13044	MV				Y	
13045	G				Y	
13046	BP				Y	
13047	T				Y	
13048	MV				Y	
13049	G				Y	
13050	P				Y	
13051	MV				Y	
13052	P				Y	
13053	MV				Y	
13054	P				Y	
13055	MV				Y	
13056	L	NA			Y	

End: 3:37 pm 05/3/21

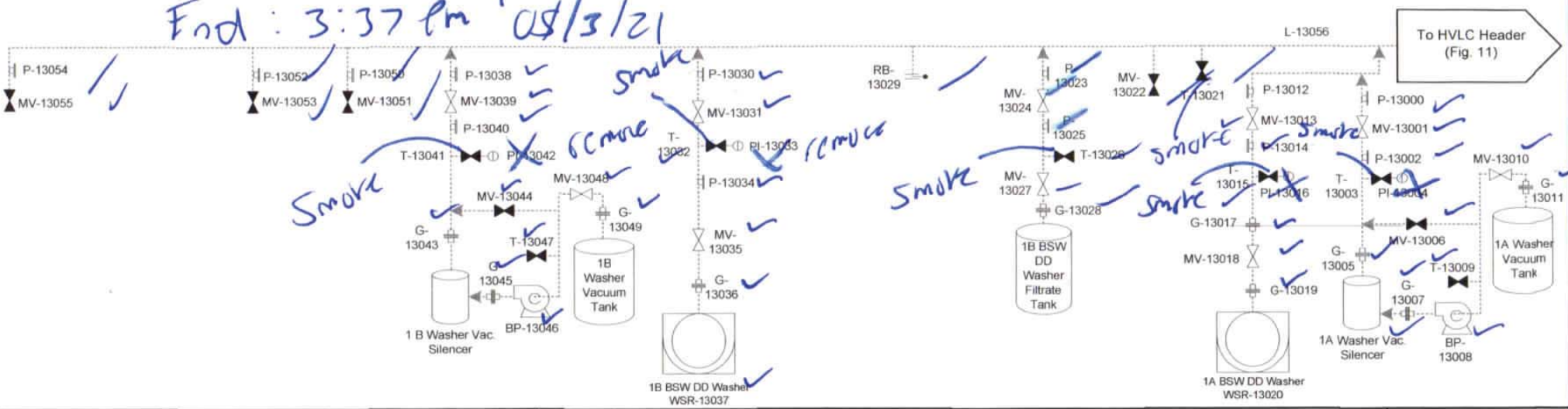

Vent Gases	To Another Page and Indicated Equipment
Condensates	
Liquor/Stock Lines	From Another Page and Indicated Equipment
Process Lines	

ENVIRONMENTAL 360

New Indy Containerboard – Catawba Mill

LDAR Inspection and Testing Diagrams
HVLC System at Pulp Mill (2 of 2)

Rev. Date March 2021

Figure 13

Inspection Date: June 7th, 2021

New Indy Containerboard - Catawba Mill
5300 Cureton Ferry Rd.
Catawba, SC 29704

2021 Monthly LDAR Inspection Summary Report

Table 1: Visual Inspection Summary Table

Equipment Number	Date	Description of Leak or Visual Defect
CTK-1000	6/7/2021	Stripper Feed Tank CTK-1000 is puffing from top of tank.
MV-1008 (Old ID Number)	6/7/2021	Manual Valve (old MV-1008) is located on the foul condensate line at the outlet of No. 1 Pre-Heater). The valve is the bypass valve for the stripped condensate and is dripping from valve stem.
T-3030 (Old ID Number)	6/7/2021	Tap valve (old T-3030) is located on SOG line near Trim Reflux Condenser and above the Stripper Column. The valve is leaking from threaded connection with a VOC reading of 788 ppm.
CV-5026	6/7/2021	Control valve CV-5026 is located on the LVHC line at outlet of Steam Ejector and prior to the mist eliminators. The valve is not collecting gases.
PT-5032	6/7/2021	Pressure transmitter PT-5032 is located on LVHC line between mist eliminator and rupture disc on steam ejector platform. The transmitter is puffing from threaded connection.
WSR-12079	6/7/2021	The 3B BSW DD Washer is puffing around hatch door.

First Attempt to Repair must be completed by:	5 Days from Inspection Date	Not Applicable if no leaks were found.
Repairs must be completed by:	15 Days from Inspection Date	Not Applicable if no leaks were found.

This report provides a summary of leaks and visual defects found during the visual inspection of the closed-vent and condensate-collection systems and complies with the record keeping requirements of 63.454(b)(1-2, 4-5).

The facility must initiate repairs to any defects within five (5) calendar days from this inspection and the defects must be repaired within fifteen (15) calendar days of the inspection. If the leak or defect requires the system to be shutdown in order to make repairs, or more emissions would occur from attempting the repair than delaying the repair, then the repairs may be delayed until the next process unit shutdown. A report must be supplied with the repair date and associated information, or the reason for the delay if the repairs are not completed within the 15-day period. These response requirements are specific to 40 CFR 63, specifically 63.453(k)(6), 63.453(l)(3), and 63.964(b)(1-2). Documentation of all repair attempts made and any leaks/defects requiring a process unit shutdown must be completed according to 63.454(b)(6-11).

I certify that the results of the visual inspection are accurate and complete to the best of my knowledge.

Inspector Name: Josh Howard

Signature: Josh Howard

Daily Calibration Sheet

ENVIRONMENTAL 360

Name: Josh Howard

Company: Environmental 360, Inc.

Date: 6/7/2021

Time: 3:14PM

Client Name: New Indy Catawba
Closed-Vent and Condensate-Collection Systems
Method 21 Testing

VOC Analyzer Model #: TVA2020 A2S1B1
VOC Analyzer Serial #: 202015010799

		Expiration Date:	Lot#:	Actual Value:
Zero Gas Concentration:	Zero Grade Air	09/24/24	304-401906627-1	<0.1
Span Gas Concentration:	500 PPM Methane	11/20/24	304-401969513-1	503
Span Gas Concentration:	<10,000 PPM Methane	11/20/24	304-401969514-1	9989

Cylinder calibration gases must be analyzed and certified by the manufacturer within 2% accuracy.

	Reading	Actual Value	Precision (%)
500 PPM Methane Calibration Precision 1:	505	503	0
500 PPM Methane Calibration Precision 2:	502	503	0
500 PPM Methane Calibration Precision 3:	502	503	0
500 PPM Methane Calibration Precision 1 w/ Tubing:	496	503	1
500 PPM Methane Calibration Precision 2 w/ Tubing:	495	503	2
500 PPM Methane Calibration Precision 3 w/ Tubing:	496	503	1
<10,000 PPM Methane Calibration Precision 1:	9952	9989	0
<10,000 PPM Methane Calibration Precision 2:	9962	9989	0
<10,000 PPM Methane Calibration Precision 3:	9983	9989	0
<10,000 PPM Methane Calibration Precision 1 w/ Tubing:	9975	9989	0
<10,000 PPM Methane Calibration Precision 2 w/ Tubing:	9990	9989	0
<10,000 PPM Methane Calibration Precision 3 w/ Tubing:	9953	9989	0

The Calibration Precision must **not** have variability greater than 10%.

Response Factor: 1

The Response Factor must **not** be greater than 10.

Response Time: 3 sec

Response Time with 20 Ft. Extension Tubing: 8 sec

The Response Time must **not** be greater than 30 seconds. All probes and extensions used during the testing must be attached while measuring the response time.

Calibration Check: 488/503 = 3 %
Calibration Check Time: 8:11PM

Comments:

I certify that calibration occurred prior to use and that all regulations and requirements were met.

Signed: Josh Howard

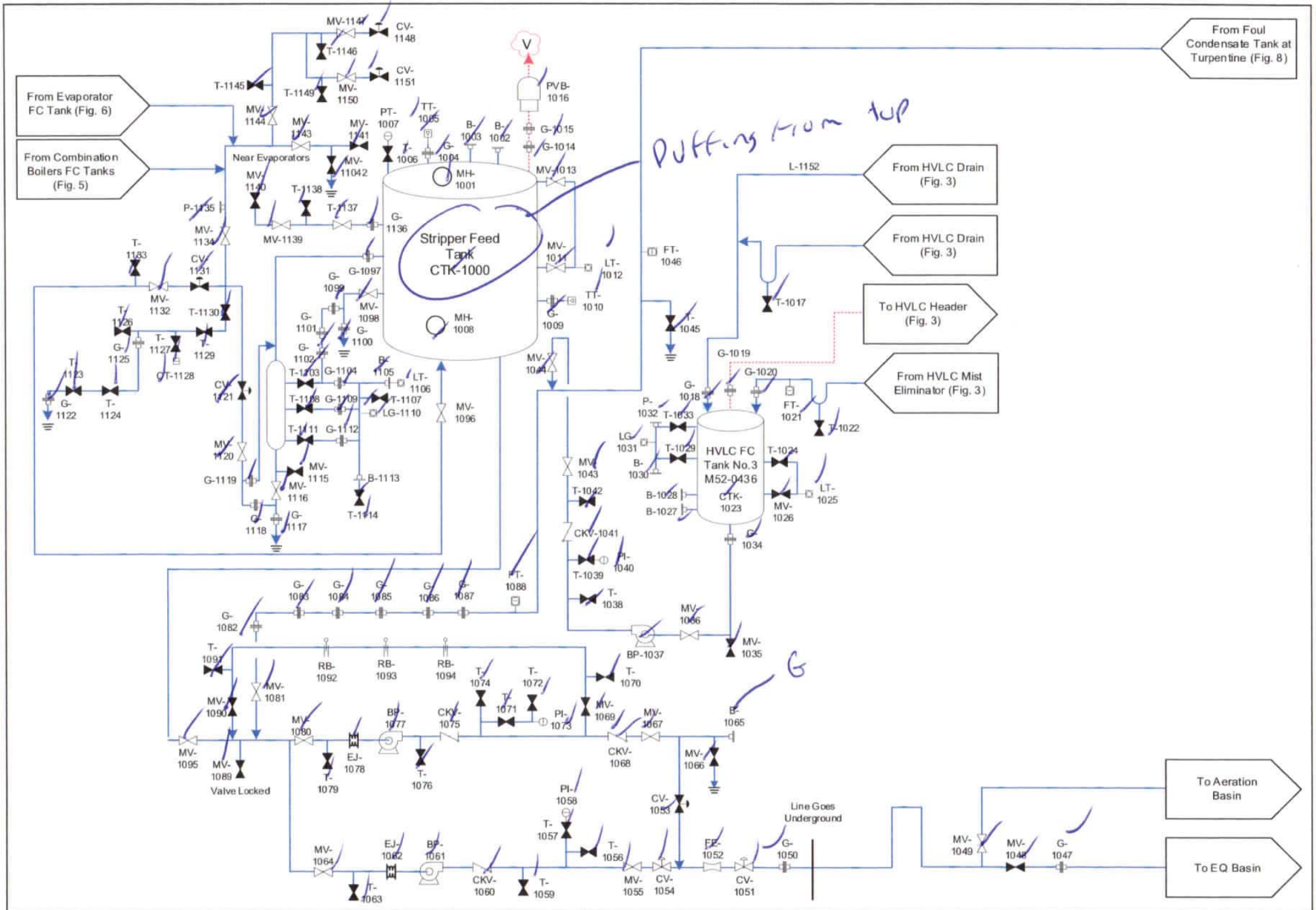

Vent Gases	To Another Page and Indicated Equipment
Condensates	From Another Page and Indicated Equipment
Liquor/Stock Lines	
Process Lines	

ENVIRONMENTAL360

New Indy Containerboard – Catawba Mill

LDAR Inspection and Testing Diagrams
Stripper System Foul Condensate

Rev. Date
May 2021

Figure 1

Stripper System Foul Condensate
Completed Date/Time: 06/07/21 ~~12:15PM~~ TK1

Number	Type	Pressure (+/-)	Background	VOC Reading	Is Component Free of Leaks or Defects?	Comments
1000	CTK				~~Y~~ NO	Puff. on Foul top of tank
1001	MH				Y	
1002	B				Y	
1003	B				Y	
1004	G				Y	
1005	TT				Y	
1006	T				Y	
1007	PT				Y	
1008	MH				Y	
1009	G				Y	
1010	TT				Y	
1011	MV				Y	
1012	LT				Y	
1013	MV				Y	
1014	G				Y	
1015	G				Y	
1016	PVB				Y	
1017	T				Y	
1018	G				Y	
1019	G				Y	
1020	G				Y	
1021	FT				Y	
1022	T				Y	
1023	CTK				Y	
1024	T				Y	
1025	LT				Y	
1026	MV				Y	
1027	B				Y	
1028	B				Y	
1029	T				Y	
1030	B				Y	
1031	LG				Y	
1032	P				Y	
1033	T				Y	
1034	G				Y	
1035	MV				Y	
1036	MV				Y	
1037	BP				Y	
1038	T				Y	
1039	T				Y	
1040	PI				Y	
1041	CKV				Y	
1042	T				Y	
1043	MV				Y	
1044	MV				Y	
1045	T				Y	
1046	FT				Y	
1047	G				Y	
1048	MV				Y	
1049	MV				Y	
1050	G				Y	
1051	CV				Y	
1052	FE				Y	
1053	CV				Y	
1054	CV				Y	
1055	MV				Y	
1056	T				Y	
1057	T				Y	
1058	PI				Y	
1059	T				Y	
1060	CKV				Y	
1061	BP				Y	
1062	EJ				Y	
1063	T				Y	
1064	MV				Y	
1065	~~B~~ G				Y	
1066	MV				Y	
1067	MV				Y	
1068	CKV				Y	
1069	MV				Y	
1070	T				Y	
1071	T				Y	
1072	T				Y	
1073	PI				Y	
1074	T				Y	
1075	CKV				~~Y~~ CS	
1076	T				Y	
1077	BP				Y	
1078	EJ				Y	
1079	T				Y	
1080	MV				Y	
1081	MV				Y	
1082	G				Y	
1083	G				Y	
1084	G				Y	
1085	G				Y	
1086	G				Y	
1087	G				Y	
1088	FT				Y	
1089	MV				Y	
1090	MV				Y	
1091	T				Y	
1092	RB				Y	
1093	RB				Y	
1094	RB				Y	
1095	MV				Y	
1096	MV				Y	
1097	G				Y	
1098	MV				Y	
1099	G				Y	
1100	G				Y	
1101	G				Y	
1102	G				Y	
1103	T				Y	
1104	G				Y	
1105	B				Y	
1106	LT				Y	
1107	T				Y	
1108	T				Y	
1109	G				Y	
1110	LG				Y	
1111	T				Y	
1112	G				Y	
1113	B				Y	
1114	T				Y	
1115	MV				Y	
1116	MV				Y	
1117	G				Y	
1118	G				Y	
1119	G				Y	
1120	MV				Y	
1121	CV				Y	
1122	G				Y	
1123	T				Y	
1124	T				Y	
1125	G				Y	
1126	T				Y	
1127	T				Y	
1128	CT				Y	
1129	T				Y	
1130	T				Y	
1131	CV				Y	
1132	MV				Y	
1133	T				Y	
1134	MV				Y	
1135	P				Y	
1136	G				Y	
1137	T				Y	
1138	T				Y	
1139	MV				Y	
1140	MV				Y	
1141	MV				Y	
1142	MV				Y	
1143	MV				Y	
1144	MV				Y	
1145	T				Y	
1146	T				Y	
1147	MV				Y	
1148	CV				Y	
1149	T				Y	
1150	MV				Y	
1151	CV				Y	
1152	L				Y	

Stripper Feed Tank
Completed Date/Time: 06/07/21 11:10 Am

Number	Type	Pressure (+/-)	Background	VOC Reading	Is Component Free of Leaks or Defects?	Comments
2000	G				Yes	
2001	T				Y	
2002	MV				Y	
2003	T				Y	
2004	CV				Y	
2005	CV				Y	
2006	MV				Y	
2007	T				Y	
2008	T				Y	
2009	T				Y	
2010	PT				Y	
2011	PT				Y	
2012	RD				Y	
2013	CV				Y	
2014	T				Y	
2015	T				Y	
2016	T				Y	
2017	PI				Y	
2018	P				Y	
2019	FA				Y	
2020	P				Y	
2021	T				Y	
2022	T				Y	
2023	PI				Y	
2024	TI				Y	
2025	MV				Y	
2026	T				Y	
2027	L				Y	

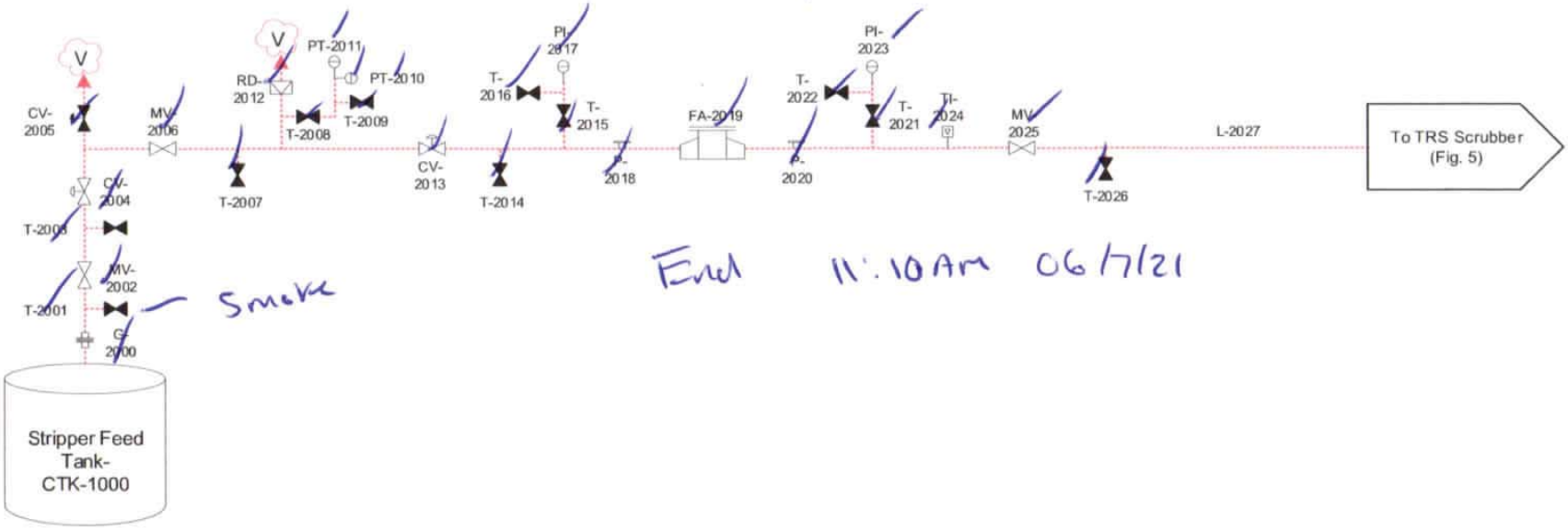

Vent Gases Condensates Liquor/Stock Lines Process Lines	To Another Page and Indicated Equipment From Another Page and Indicated Equipment	ENVIRONMENTAL 360	New Indy Containerboard – Catawba Mill LDAR Inspection and Testing Diagrams Stripper Feed Tank	Rev. Date May 2021 Figure 2

Combination Boiler HVLC Incinerator
Completed Date/Time: 06/07/21 5:08PM

Number	Type	Pressure (+/-)	Background	VOC Reading	Is Component Free of Leaks or Defects?	Comments
3000	EJ	+	0	2	yes	
3001	MV			2	" "	
3002	P			2	" "	
3003	T			1	" "	
3004	PI			1	" "	
3005	FA			1	" "	
3006	T			1	" "	
3007	PI			1	" "	
3008	G			1	" "	
3009	TT			1	" "	
3010	P			1	" "	
3011	EJ			1	" "	
3012	MV			1	" "	
3013	T			1	" "	
3014	PI			1	" "	
3015	FA			1	" "	
3016	T			1	" "	
3017	PI			1	" "	
3018	EJ				" "	monthly
3019	TT				" "	
3020	MV				" "	
3021	T				" "	
3022	PI				" "	
3023	FA				" "	
3024	T				" "	
3025	PI				" "	
3026	EJ				yes	monthly
3027	MV				" "	
3028	P				" "	
3029	T				" "	
3030	PI				" "	
3031	FA				" "	
3032	T				" "	
3033	PI				" "	
3034	CV				" "	
3035	MV				" "	
3036	T				" "	
3037	PT				" "	
3038	MV				" "	
3039	RD				" "	
3040	CV				" "	
3041	MV				" "	
3042	CV	+	0	1	yes	
3043	G				" "	Monthly
3044	TT				" "	
3045	P				" "	
3046	P				" "	
3047	G				" "	
3048	G				" "	
3049	P				" "	
3050	ME				" "	
3051	P				" "	
3052	G				" "	
3053	G				" "	
3054	L				" "	

Start 4:58 ~~AM~~ PM 06/07/21
End 5:08 PM

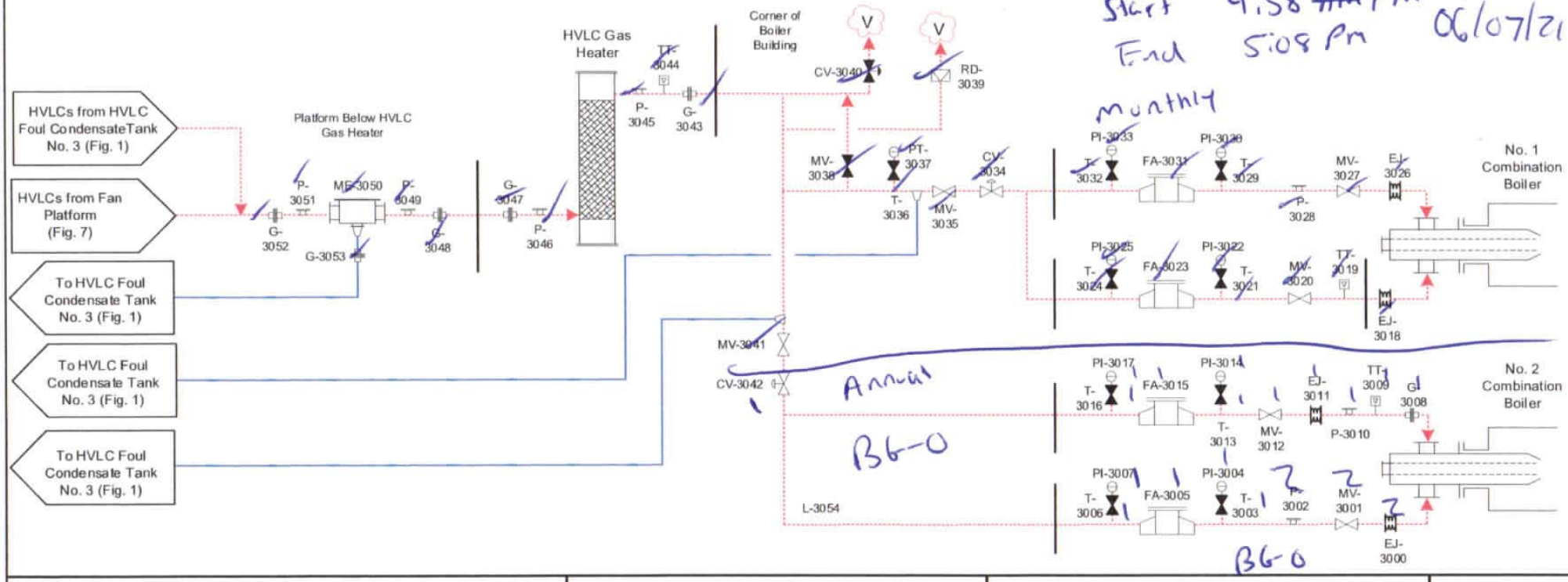

Vent Gases
Condensates
Liquor/Stock Lines
Process Lines

To Another Page and Indicated Equipment
From Another Page and Indicated Equipment

ENVIRONMENTAL 360

New Indy Containerboard – Catawba Mill

LDAR Inspection and Testing Diagrams
Combination Boiler HVLC Incineration

Rev. Date May 2021

Figure 3

Combination Boiler LVHC Incineration

Completed Date/Time: 06/07/21 5:14 PM

Number	Type	Pressure (+/-)	Background	VOC Reading	Is Component Free of Leaks or Defects?	Comments
4000	G				Yes	Monthly
4001	EJ				Y	
4002	MV				Y	
4003	T				Y	
4004	PT				Y	
4005	TT				Y	
4006	P				Y	
4007	FA				Y	
4008	P				Y	
4009	T				Y	
4010	PT				Y	
4011	G	+	1	1	Y	
4012	EJ			1	Y	
4013	MV			18	Y	
4014	T			9	Y	
4015	PT			9	Y	
4016	TT			4	Y	
4017	P			4	Y	
4018	FA			4	Y	
4019	P			1	Y	
4020	T			1	Y	
4021	PT			1	Y	
4022	L	~~+~~ N/A			Y	

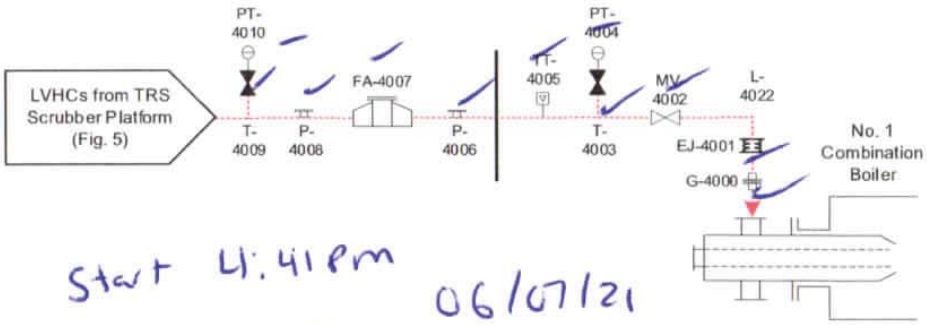

Start 4:41 PM 06/07/21

End 4:50 PM

~~Start~~ JKU

BG-1

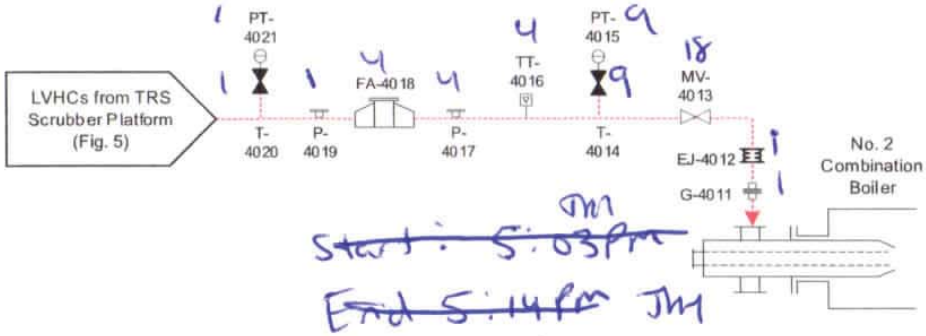

JM

~~Start: 5:03 PM~~

~~End 5:14 PM~~ JM

06/07/21

Vent Gases Condensates Liquor/Stock Lines Process Lines	To Another Page and Indicated Equipment From Another Page and Indicated Equipment	ENVIRONMENTAL 360	New Indy Containerboard – Catawba Mill LDAR Inspection and Testing Diagrams Combination Boiler LVHC Incineration	Rev. Date May 2021 Figure 4

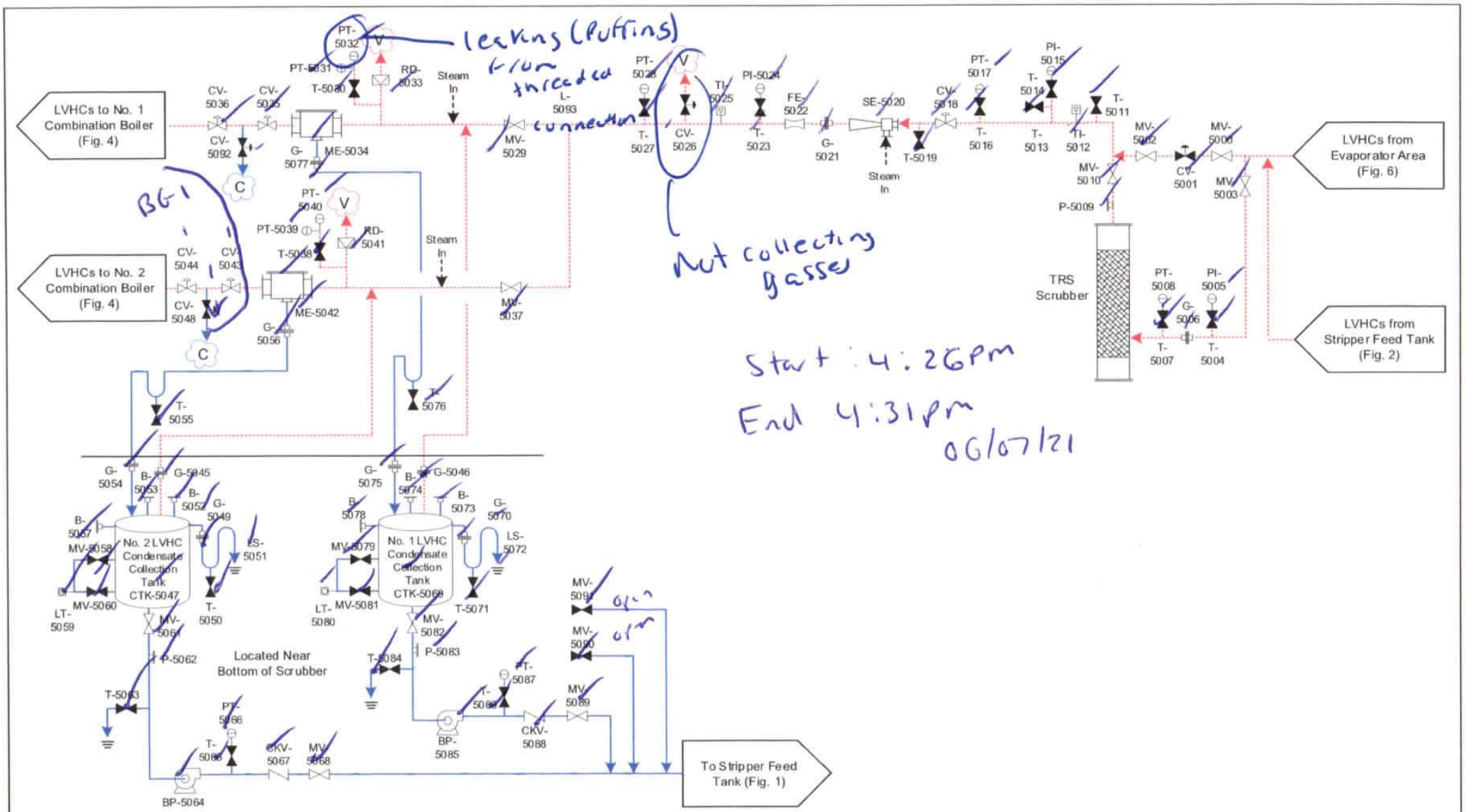

Vent Gases Condensates Liquor/Stock Lines Process Lines	To Another Page and Indicated Equipment From Another Page and Indicated Equipment	ENVIRONMENTAL 360	New Indy Containerboard – Catawba Mill LDAR Inspection and Testing Diagrams TRS Scrubber Platform
			Rev. Date May 2021 Figure 5

TRS Scrubber Platform

Completed Date/Time: 06/07/21 4:31pm

Number	Type	Pressure (+/-)	Background	VOC Reading	Is Component Free of Leaks or Defects?	Comments
5000	MV				yes	Monthly
5001	CV				y	
5002	MV				y	
5003	MV				y	
5004	T				y	
5005	PI				y	
5006	G				y	
5007	T				y	
5008	PT				y	
5009	P				y	
5010	MV				y	
5011	T				y	
5012	TI				y	
5013	T				y	
5014	T				y	
5015	PI				y	
5016	T				y	
5017	PT				y	
5018	CV				y	
5019	T				y	
5020	SE				y	
5021	G				y	
5022	FE				y	
5023	T				y	
5024	PI				y	
5025	TI				y	
5026	CV				NO	Not collecting gasses
5027	T				y	
5028	PT				y	
5029	MV				y	
5030	T				y	
5031	PT				y	
5032	PT				NO	Puffing from threaded connection
5033	RD				y	
5034	ME				y	
5035	CV				y	
5036	CV				y	
5037	MV				y	
5038	T				y	
5039	PT				y	
5040	PT				y	
5041	RD				y	
5042	ME				y	
5043	CV				y	
5044	CV				y	
5045	G				yes	Monthly
5046	G				y	
5047	CTK				y	
5048	CV	Cond			y	
5049	G				y	Monthly
5050	T				y	
5051	LS				y	
5052	B				y	
5053	B				y	
5054	G				y	
5055	T				y	
5056	G				y	
5057	B				y	
5058	MV				y	
5059	LT				y	
5060	MV				y	
5061	MV				y	
5062	P				y	
5063	T				y	
5064	BP				y	
5065	T				y	
5066	PT				y	
5067	CKV				y	
5068	MV				y	
5069	CTK				y	
5070	G				y	
5071	T				y	
5072	LS				y	
5073	B				y	
5074	B				y	
5075	G				y	
5076	T				y	
5077	G				y	
5078	B				y	
5079	MV				y	
5080	LT				y	
5081	MV				y	
5082	MV				y	
5083	P				y	
5084	T				y	
5085	BP				y	
5086	T				y	
5087	PT				y	
5088	CKV				y	
5089	MV				y	
5090	MV				y	
5091	MV				y	
5092	CV				y	
5093	L				y	

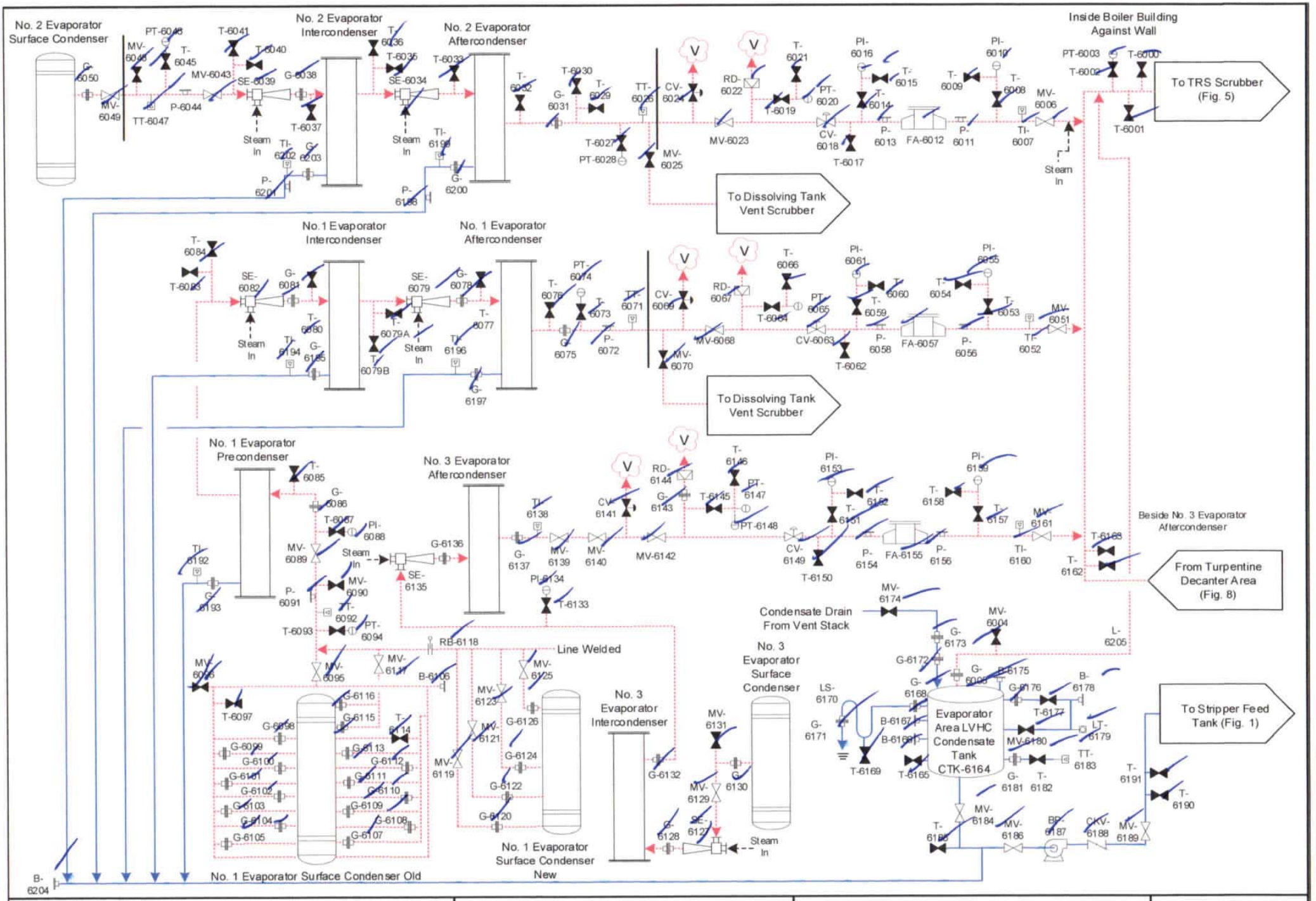

Vent Gases Condensates Liquor/Stock Lines Process Lines	To Another Page and Indicated Equipment From Another Page and Indicated Equipment	ENVIRONMENTAL 360	New Indy Containerboard – Catawba Mill LDAR Inspection and Testing Diagrams Evaporator System	Rev. Date May 2021 Figure 6

Evaporator System

Completed Date/Time: 06/07/21

Number	Type	Pressure (+/-)	Background	VOC Reading	Is Component Free of Leaks or Defects?	Comments
6000	T				Y C S	
6001	T				Y	
6002	T				Y	
6003	PT				Y	
6004	MV				Y	
6005	G				Y	
6006	MV				Y	
6007	TI				Y	
6008	T				Y	
6009	T				Y	
6010	PI				Y	
6011	P				Y	
6012	FA				Y	
6013	P				Y	
6014	T				Y	
6015	T				Y	
6016	PI				Y	
6017	T				Y	
6018	CV				Y	
6019	T				Y	
6020	PT				Y	
6021	T				Y	
6022	RD				Y	
6023	MV				Y	
6024	CV				Y	
6025	MV				Y	
6026	TT				Y	
6027	T				Y	
6028	PT				Y	
6029	T				Y	
6030	T				Y	
6031	G				Y	
6032	T				Y	
6033	T				Y	
6034	SE				Y	
6035	T				Y	
6036	T				Y	
6037	T				Y	
6038	G				Y	
6039	SE				Y	
6040	T				Y	
6041	T				Y	
6043	MV				Y	
6044	P				Y	
6045	T				Y	
6046	PT				Y	
6047	TT				Y	
6048	MV				Y	
6049	MV				Y e S	
6050	G				Y	
6051	MV				Y	
6052	TI				Y	
6053	T				Y	
6054	T				Y	
6055	PI				Y	
6056	P				Y	
6057	FA				Y	
6058	P				Y	
6059	T				Y	
6060	T				Y	
6061	PI				Y	
6062	T				Y	
6063	CV				Y	
6064	T				Y	
6065	PT				Y	
6066	T				Y	
6067	RD				Y	
6068	MV				Y	
6069	CV				Y	
6070	MV				Y	
6071	TT				Y	
6072	P				Y	
6073	T				Y	
6074	PT				Y	
6075	G				Y	
6076	T				Y	
6077	T				Y	
6078	G				Y	
6079	SE				Y	
6079A	T				Y	
6079B	T				Y	
6080	T				Y	
6081	G				Y	
6082	SE				Y	
6083	T				Y	
6084	T				Y	
6085	T				Y	
6086	G				Y	
6087	T				Y	
6088	PI				Y	
6089	MV				Y	
6090	MV				Y	
6091	P				Y	
6092	TT				Y	
6093	T				Y	
6094	PT				Y	
6095	MV				Y	
6096	MV				Y	
6097	T				Y	
6098	G				Y	
6099	G				Y	

Evaporator System
Completed Date/Time: 6/7/21

Number	Type	Pressure (+/-)	Background	VOC Reading	Is Component Free of Leaks or Defects?	Comments
6100	G				yes	
6101	G				y	
6102	G				y	
6103	G				y	
6104	G				y	
6105	G				y	
6106	B				y	
6107	G				y	
6108	G				y	
6109	G				y	
6110	G				y	
6111	G				y	
6112	G				y	
6113	G				y	
6114	T				y	
6115	G				y	
6116	G				y	
6117	MV				y	
6118	RB				y	
6119	MV				y	
6120	G				y	
6121	MV				y	
6122	G				y	
6123	MV				y	
6124	G				y	
6125	MV				y	
6126	G				y	
6127	SE				y	
6128	G				y	
6129	MV				y	
6130	G				y	
6131	MV				y	
6132	G				y	
6133	T				y	
6134	PI				y	
6135	SE				y	
6136	G				y	
6137	G				y	
6138	TI				y	
6139	MV				y	
6140	MV				y	
6141	CV				y	
6142	MV				y	
6143	G				y	
6144	RD				y	
6145	T				y	
6146	T				y	
6147	PT				y	
6148	PT				y	
6149	CV				y	
6150	T				y	
6151	T				y	
6152	T				y	
6153	PI				yes	
6154	P				y	
6155	FA				y	
6156	P				y	
6157	T				y	
6158	T				y	
6159	PI				y	
6160	TI				y	
6161	MV				y	
6162	T				y	
6163	T				y	
6164	CTK				y	
6165	T				y	
6166	B				y	
6167	B				y	
6168	G				y	
6169	T				y	
6170	LS				y	
6171	G				y	
6172	G				y	
6173	G				y	
6174	MV				y	
6175	B				y	
6176	G				y	
6177	T				y	
6178	B				y	
6179	LT				y	
6180	MV				y	
6181	G				y	
6182	T				y	
6183	TT				y	
6184	MV				y	
6185	T				y	
6186	MV				y	
6187	BP				y	
6188	CKV				y	
6189	MV				y	
6190	T				y	
6191	T				y	
6192	TI				y	
6193	G				y	
6194	TI				y	
6195	G				y	
6196	TI				y	
6197	G				y	
6198	P				y	
6199	TI				y	
6200	G				y	
6201	P				y	
6202	TI				y	
6203	G				y	
6204	B				y	
6205	L				y	

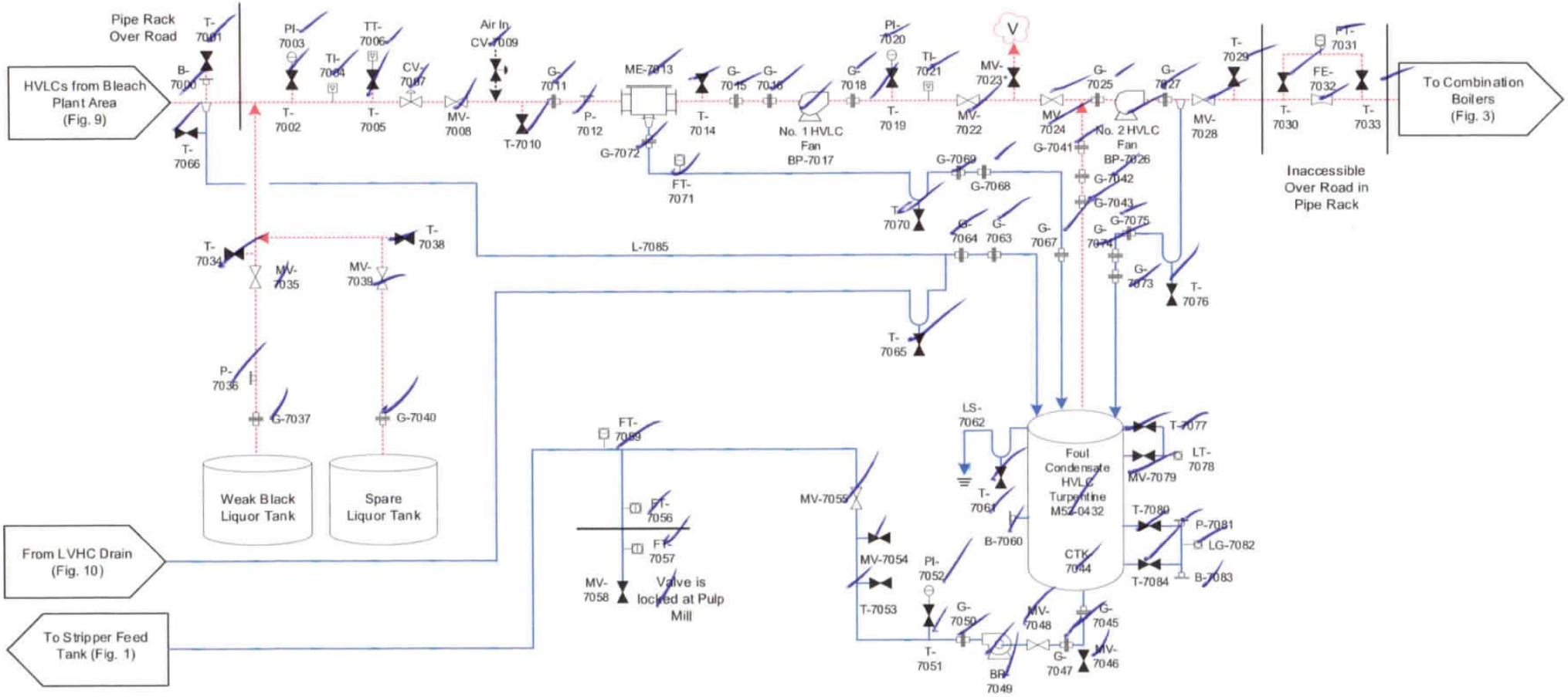

* Indicates car seal present

Vent Gases Condensates Liquor/Stock Lines Process Lines	To Another Page and Indicated Equipment From Another Page and Indicated Equipment	ENVIRONMENTAL 360	New Indy Containerboard – Catawba Mill LDAR Inspection and Testing Diagrams HVLC Blower Platform	Rev. Date May 2021 Figure 7

HVLC Blower Platform

Completed Date/Time: 06/7/21

Number	Type	Pressure (+/-)	Background	VOC Reading	Is Component Free of Leaks or Defects?	Comments
7000	B				Y 25	
7001	T				Y	
7002	T				Y	
7003	PI				Y	
7004	TI				Y	
7005	T				Y	
7006	TT				Y	
7007	CV				Y	
7008	MV				Y	
7009	CV				Y	
7010	T				Y	
7011	G				Y	
7012	P				Y	
7013	ME				Y	
7014	T				Y	
7015	G				Y	
7016	G				Y	
7017	BP				Y	
7018	G				Y	
7019	T				Y	
7020	PI				Y	
7021	TI				Y	
7022	MV				Y	
7023	MV				Y	Car seal present
7024	MV				Y	
7025	G				Y	
7026	BP				Y	
7027	G				Y	
7028	MV				Y	
7029	T				Y	
7030	T				Y	
7031	FT				Y	
7032	FE				Y	
7033	T				Y	
7034	T				Y	
7035	MV				Y	
7036	P				Y	
7037	G				Y	
7038	T				Y	
7039	MV				Y	
7040	G				Y	
7041	G				Y	
7042	G				Y	
7043	G				Y	
7044	CTK				Y	
7045	G				Y	
7046	MV				Y	
7047	G				Y	
7048	MV				Y	
7049	BP				Y	
7050	G				Y	
7051	T				Y	
7052	PI				Y	
7053	T				Y	
7054	MV				Y	
7055	MV				Y	
7056	FT				Y	
7057	FT				Y	
7058	MV				Y	
7059	FT				Y	
7060	B				Y	
7061	T				Y	
7062	LS				Y	
7063	G				Y	
7064	G				Y	
7065	T				Y	
7066	T				Y	
7067	G				Y	
7068	G				Y	
7069	G				Y	
7070	T				Y	
7071	FT				Y	
7072	G				Y	
7073	G				Y	
7074	G				Y	
7075	G				Y	
7076	T				Y	
7077	T				Y	
7078	LT				Y	
7079	MV				Y	
7080	T				Y	
7081	P				Y	
7082	LG				Y	
7083	B				Y	
7084	T				Y	
7085	L				Y	

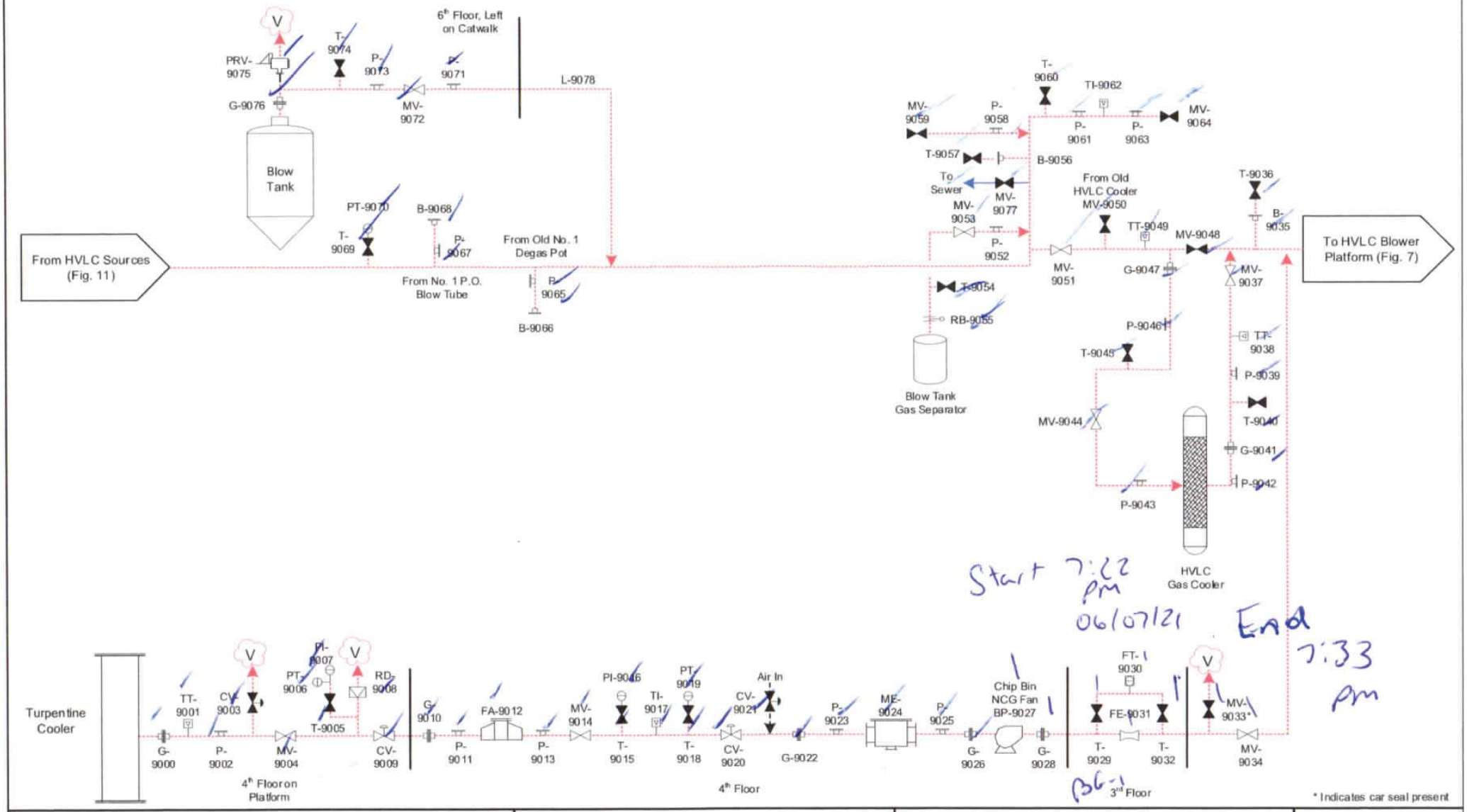

Vent Gases
Condensates
Liquor/Stock Lines
Process Lines

To Another Page and Indicated Equipment

From Another Page and Indicated Equipment

ENVIRONMENTAL 360

New Indy Containerboard – Catawba Mill

LDAR Inspection and Testing Diagrams
Turpentine Cooler and Blow Tank

Rev. Date
May 2021

Figure 9

Turpentine Cooler and Blow Tank

Completed Date/Time: 06/07/21 JKT 7:33PM

Number	Type	Pressure (+/-)	Background	VOC Reading	Is Component Free of Leaks or Defects?	Comments
9000	G				Yes	monthly
9001	TT				Y	
9002	P				Y	
9003	CV				Y	
9004	MV				Y	
9005	T				Y	
9006	PT				Y	
9007	PI				Y	
9008	RD				Y	
9009	CV				Y	
9010	G				Y	
9011	P				Y	
9012	FA				Y	
9013	P				Y	
9014	MV				Y	
9015	T				Y	
9016	PI				Y	
9017	TI				Y	
9018	T				Y	
9019	PT				Y	
9020	CV				Y	
9021	CV				Y	
9022	G				Y	
9023	P				Y	
9024	ME				Y	
9025	P				Y	
9026	G				Y	
9027	BP	+	1	1	Y	
9028	G	+		1	Y	
9029	T	+		1	Y	
9030	FT	+		1	Y	
9031	FE	+		1	Y	
9032	T	+		1	Y	
9033	MV	+		1	Y	Car seal present
9034	MV	+		1	Y	
9035	B				Y	monthly
9036	T				Yes	monthly
9037	MV				Y	
9038	TT				Y	
9039	P				Y	
9040	T				Y	
9041	G				Y	
9042	P				Y	
9043	P				Y	
9044	MV				Y	
9045	T				Y	
9046	P				Y	
9047	G				Y	
9048	MV				Y	
9049	TT				Y	
9050	MV				Y	
9051	MV				Y	
9052	P				Y	
9053	MV				Y	
9054	T				Y	
9055	RB				Y	
9056	B				Y	
9057	T				Y	
9058	P				Y	
9059	MV				Y	
9060	T				Y	
9061	P				Y	
9062	TI				Y	
9063	P				Y	
9064	MV				Y	
9065	P				Y	
9066	B				Y	
9067	P				Y	
9068	B				Y	
9069	T				Y	
9070	PT				Y	
9071	P				Y	
9072	MV				Y	
9073	P				Y	
9074	T				Y	
9075	PRV				Y	
9076	G				Y	
9077	MV				Y	
9078	L				Y	~~NA~~ JKT

Turpentine Condenser and LVHC Gas Cooler

Completed Date/Time: 06/07/21

Number	Type	Pressure (+/-)	Background	VOC Reading	Is Component Free of Leaks or Defects?	Comments
10000	RB				yes	
10001	TT				y	
10002	PI				y	
10003	P				y	
10004	G				y	
10005	P				y	
10006	P				y	
10007	FA				y	
10008	P				y	
10009	P				y	
10010	G				y	
10011	P				y	
10012	TT				y	
10013	CV				yes	
10014	MV				y	
10015	T				y	
10016	T				y	
10017	PT				y	
10018	RD				y	
10019	P				y	
10020	CV				y	
10021	T				y	
10022	T				y	
10023	PI				y	
10024	FA				y	
10025	P				y	
10026	MV				y	
10027	T				y	
10028	L				y	

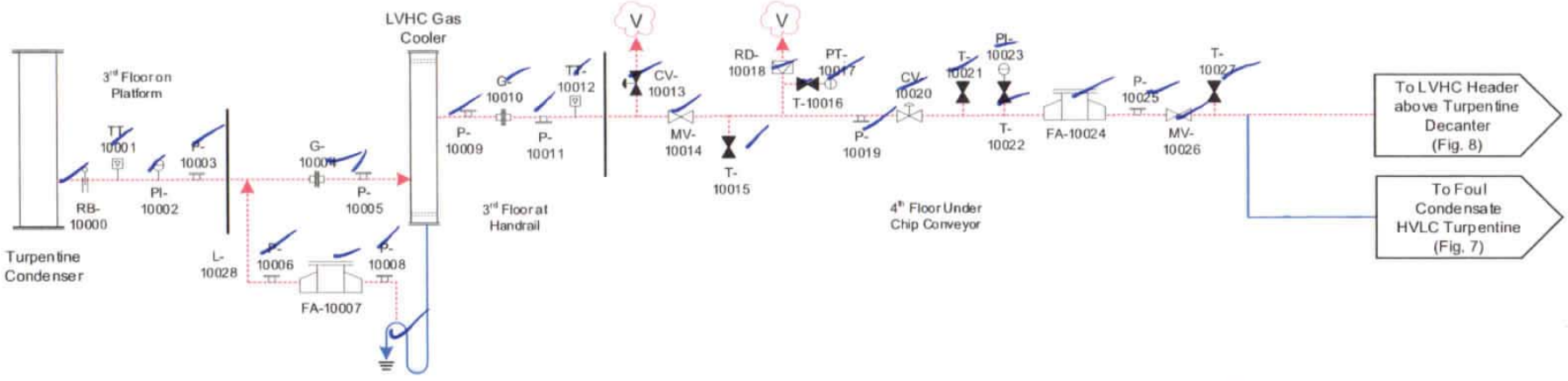

Vent Gases
Condensates
Liquor/Stock Lines
Process Lines

To Another Page and Indicated Equipment

From Another Page and Indicated Equipment

ENVIRONMENTAL360

New Indy Containerboard – Catawba Mill

LDAR Inspection and Testing Diagrams
Turpentine Condenser and LVHC Gas Cooler

Rev. Date
May 2021

Figure 10

HVLC System at Pulp Mil (1 of 2)

Completed Date/Time: 06/07/21

Number	Type	Pressure (+/-)	Background	VOC Reading	Is Component Free of Leaks or Defects?	Comments
11000	P				Yes	
11001	MV				Y	
11002	P				Y	
11003	T				Y	
11004	G				Y	
11005	P				Y	
11006	MV				Y	
11007	P				Y	
11008	B				Y Y	
11009	T				Y	
11010	P				Y	
11011	MV				Y	
11012	P				Y Y	
11013	T				Y	
11014	P				Yes	
11015	MV				Y	
11016	P				Y	
11017	T				Y	
11018	P				Y	
11019	MV				Y	
11020	P				Y	
11021	T				Y	
11022	G				Y	
11023	P				Y	
11024	MV				Y	
11025	P				Y	
11026	MV				Y	
11027	T				Y	
11028	P				Y	
11029	G				Y	
11030	L				Y	

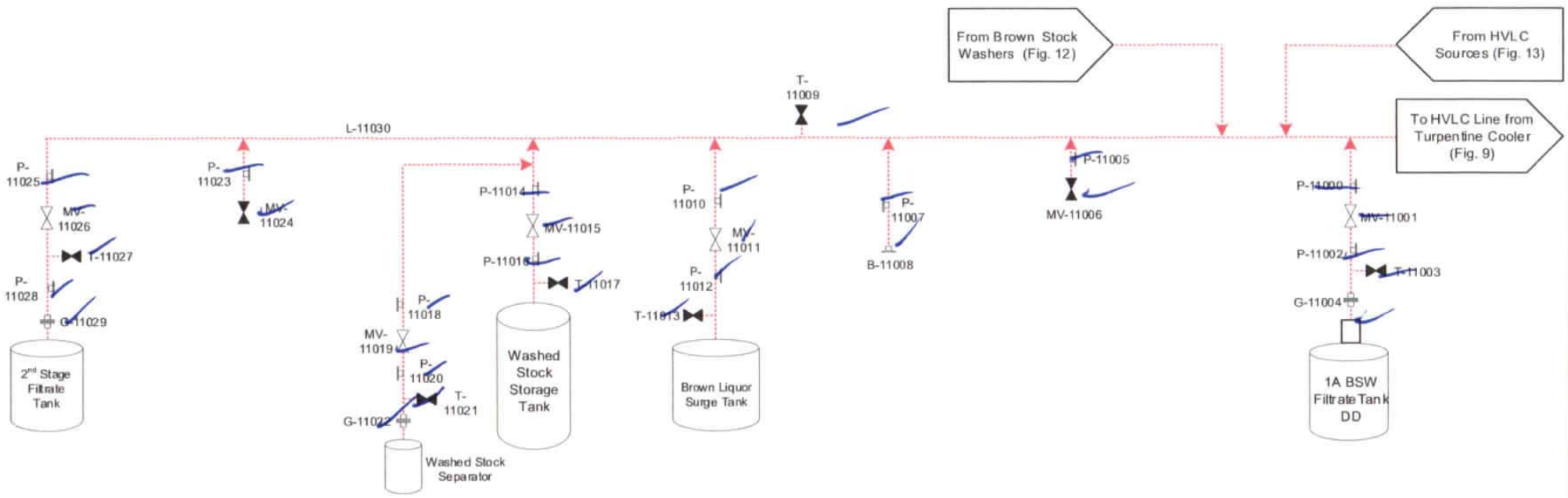

Vent Gases
Condensates
Liquor/Stock Lines
Process Lines

To Another Page and Indicated Equipment

From Another Page and Indicated Equipment

ENVIRONMENTAL 360

New Indy Containerboard – Catawba Mill

LDAR Inspection and Testing Diagrams
HVLC System at Pulp Mill (1 of 2)

Rev. Date May 2021

Figure 11

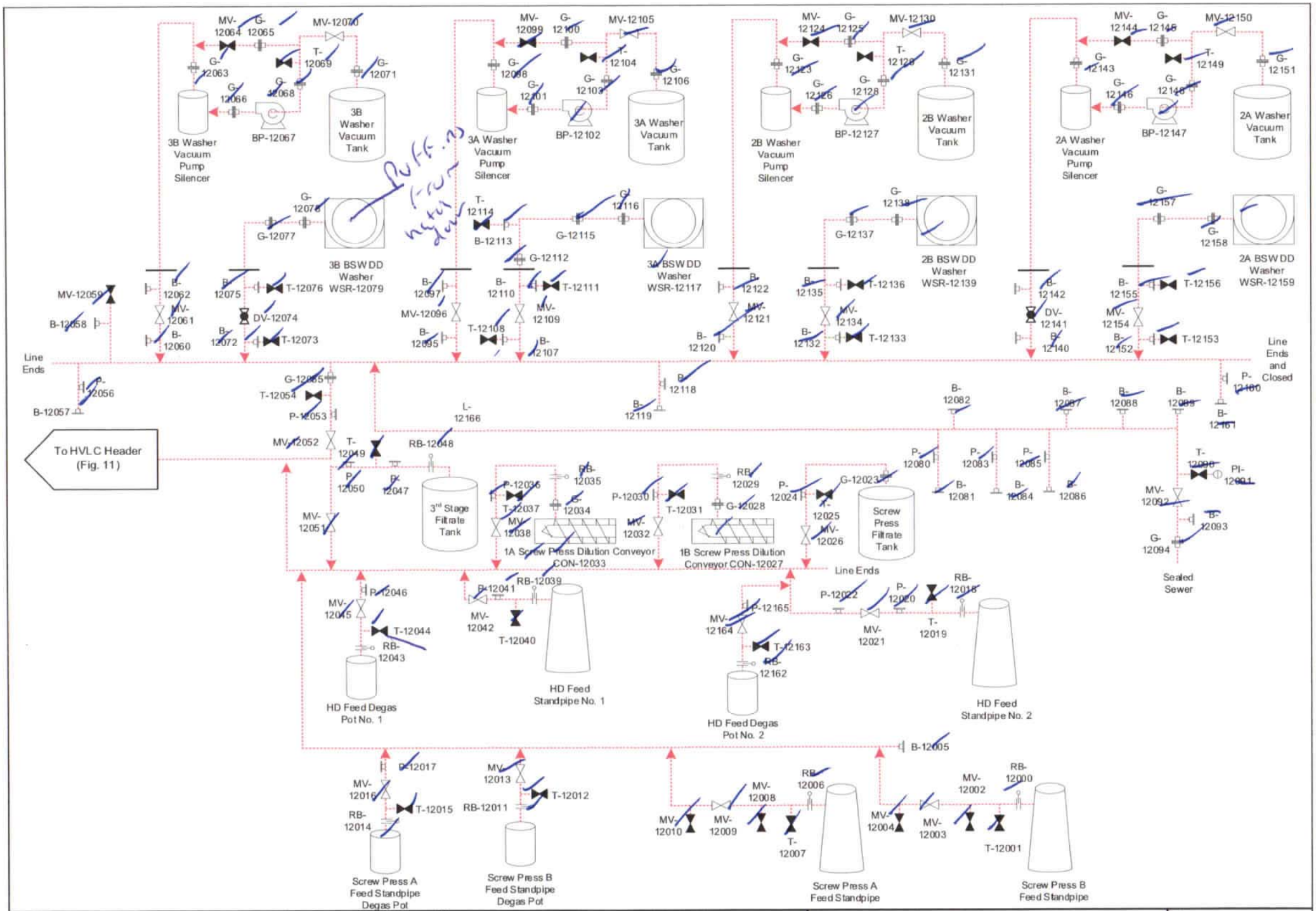

Vent Gases
Bleach Gases
Condensates
Liquor/Stock Lines
Process Lines

To Another Page and Indicated Equipment

From Another Page and Indicated Equipment

ENVIRONMENTAL 360

New Indy Containerboard – Catawba Mill

LDAR Inspection and Testing Diagrams
Pulp Mill BSWs

Rev. Date
May 2021

Figure 12

Pulp Mill BSWs

Completed Date/Time: 6/7/21

Number	Type	Pressure (+/-)	Background	VOC Reading	Is Component Free of Leaks or Defects?	Comments
12000	RB				Yes	
12001	T				Y	
12002	MV				Y	
12003	MV				Y	
12004	MV				Y	
12005	B				Y	
12006	RB				Y	
12007	T				Y	
12008	MV				Y	
12009	MV				Y	
12010	MV				Y	
12011	RB				Y	
12012	T				Y	
12013	MV				Y	
12014	RB				Y	
12015	T				Y	
12016	MV				Y	
12017	P				Y	
12018	RB				Y	
12019	T				Y	
12020	P				Y	
12021	MV				Y	
12022	P				Y	
12023	G				Y	
12024	P				Y	
12025	T				Y	
12026	MV				Y	
12027	CON				Y	
12028	G				Y	
12029	RB				Y	
12030	P				Y	
12031	T				Y	
12032	MV				Y	
12033	CON				Y	
12034	G				Y	
12035	RB				Y	
12036	P				Y	
12037	T				Y	
12038	MV				Y	
12039	RB				Yes	
12040	T				Y	
12041	P				Y	
12042	MV				Y	
12043	RB				Y	
12044	T				Y	
12045	MV				Y	
12046	P				Y	
12047	P				Y	
12048	RB				Y	
12049	T				Y	
12050	P				Y	
12051	MV				Y	
12052	MV				Y	
12053	P				Y	
12054	T				Y	
12055	G				Y	
12056	P				Y	
12057	B				Y	
12058	B				Y	
12059	MV				Y	
12060	B				Y	
12061	MV				Y	
12062	B				Y	
12063	G				Y	
12064	MV				Y	
12065	G				Y	
12066	G				Y	
12067	BP				Y	
12068	G				Y	
12069	T				Y	
12070	MV				Y	
12071	G				Y	
12072	B				Y	
12073	T				Y	
12074	DV				Y	
12075	B				Y	
12076	T				Y	
12077	G				Y	
12078	G				Y	
12079	WSR				NO	Puffing from hatch door
12080	P				Y	

Pulp Mill BSWs

Completed Date/Time: 06/07/21

Number	Type	Pressure (+/-)	Background	VOC Reading	Is Component Free of Leaks or Defects?	Comments
12081	B				yes	
12082	B				y	
12083	P				y	
12084	B				y	
12085	P				y	
12086	B				y	
12087	B				y	
12088	B				y	
12089	B				y	
12090	T				y	
12091	PI				y	
12092	MV				y	
12093	B				y	
12094	G				y	
12095	B				y	
12096	MV				y	
12097	B				y	
12098	G				y	
12099	MV				y	
12100	G				y	
12101	G				y	
12102	BP				y	
12103	G				y	
12104	T				y	
12105	MV				y	
12106	G				y	
12107	B				y	
12108	T				y	
12109	MV				y	
12110	B				y	
12111	T				y	
12112	G				y	
12113	B				y	
12114	T				y	
12115	G				y	
12116	G				y	
12117	WSR				y	
12118	P				y	
12119	B				y	
12120	B				y	
12121	MV				y	
12122	B				y	
12123	G				y	
12124	MV				y	
12125	G				y	
12126	G				y	
12127	BP				y	
12128	G				y	
12129	T				y	
12130	MV				y	
12131	G				y	
12132	B				y	
12133	T				y	
12134	MV				y	
12135	B				y	
12136	T				y	
12137	G				y	
12138	G				y	
12139	WSR				y	
12140	B				y	
12141	DV				y	
12142	B				y	
12143	G				y	
12144	MV				y	
12145	G				y	
12146	G				y	
12147	BP				y	
12148	G				y	
12149	T				y	
12150	MV				y	
12151	G				y	
12152	B				y	
12153	T				y	
12154	MV				y	
12155	B				y	
12156	T				y	
12157	G				y	
12158	G				y	
12159	WSR				y	
12160	P				y	
12161	B				y	
12162	RB				y	
12163	T				y	
12164	MV				y	
12165	P				y	
12166	L				y	

HVLC System at Pulp Mil (2 of 2)

Completed Date/Time: 06/07/21

Number	Type	Pressure (+/-)	Background	VOC Reading	Is Component Free of Leaks or Defects?	Comments
13000	P				Yes	
13001	MV				Y	
13002	P				Y	
13003	T				Y	
13005	G				Y	
13006	MV				Y	
13007	G				Y	
13008	BP				Y	
13009	T				Y	
13010	MV				Y	
13011	G				Y	
13012	P				Y	
13013	MV				Y	
13014	P				Y	
13015	T				Y	
13017	G				Y	
13018	MV				Y	
13019	G				Y	
13020	WSR				Y	
13021	T				Y	
13022	MV				Y	
13023	P				Y	
13024	MV				Y	
13025	P				Y	
13026	T				Yes	
13027	MV				Y	
13028	G				Y	
13029	RB				Y	
13030	P				Y	
13031	MV				Y	
13032	T				Y	
13034	P				Y	
13035	MV				Y	
13036	G				Y	
13037	WSR				Y	
13038	P				Y	
13039	MV				Y	
13040	P				Y	
13041	T				Y	
13043	G				Y	
13044	MV				Y	
13045	G				Y	
13046	BP				Y	
13047	T				Y	
13048	MV				Y	
13049	G				Y	
13050	P				Y	
13051	MV				Y	
13052	P				Y	
13053	MV				Y	
13054	P				Y	
13055	MV				Y	

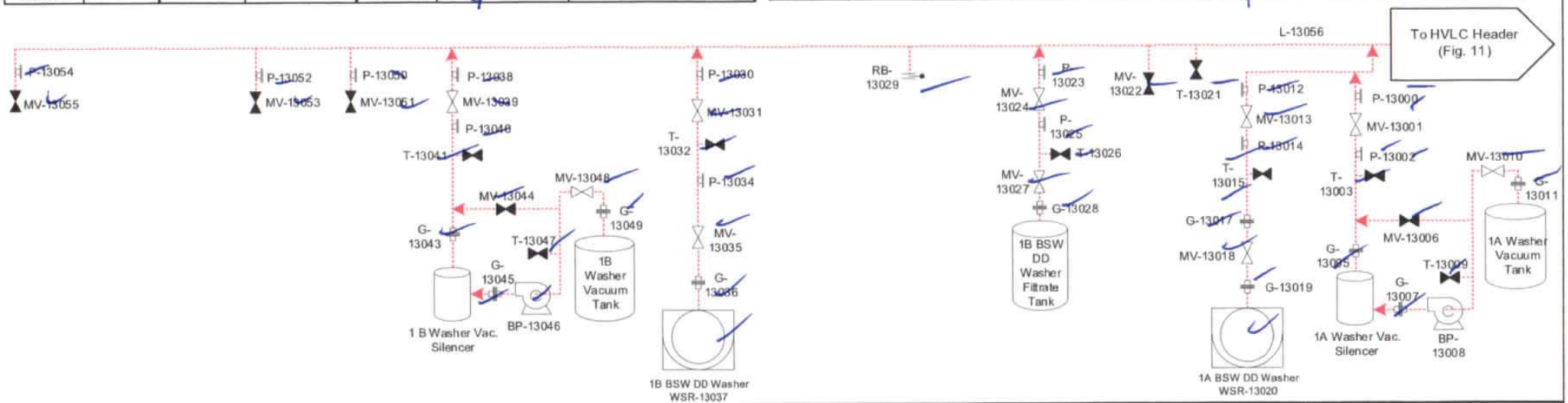

Vent Gases
Condensates
Liquor/Stock Lines
Process Lines

To Another Page and Indicated Equipment

From Another Page and Indicated Equipment

ENVIRONMENTAL 360

New Indy Containerboard – Catawba Mill

LDAR Inspection and Testing Diagrams
HVLC System at Pulp Mill (2 of 2)

Rev. Date
May 2021

Figure 13

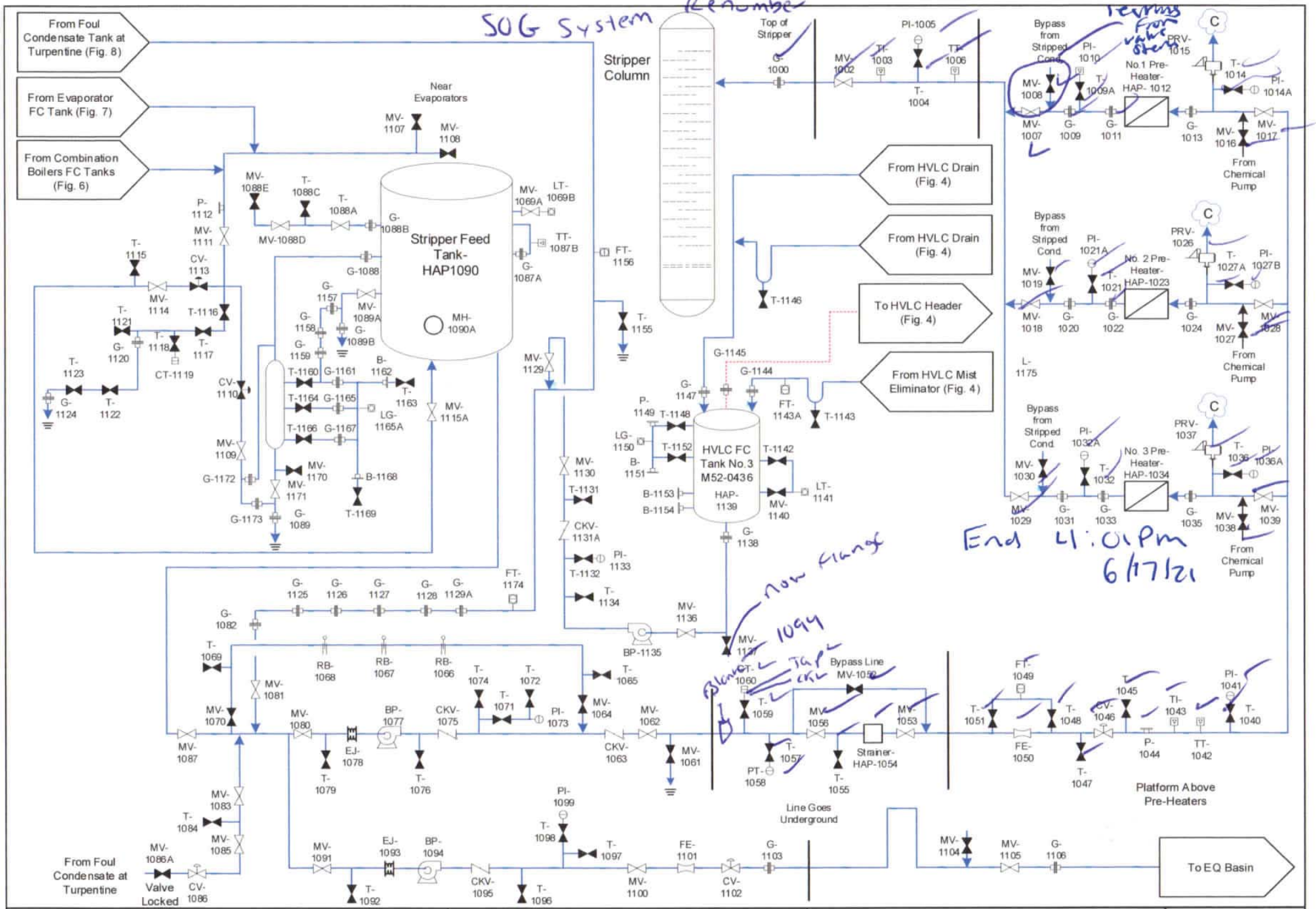

Vent Gases Condensates Liquor/Stock Lines Process Lines	To Another Page and Indicated Equipment From Another Page and Indicated Equipment	ENVIRONMENTAL 360	New-Indy – Catawba Mill LDAR Inspection and Testing Diagrams Stripper System Foul Condensate

Rev. Date July 2020

Figure 1

Stripper Column SOGs

Completed Date/Time: End 4:16PM 6/07/21

Number	Type	Equip. Number	Pressure (+/-)	Background	VOC Reading	Is Component Free of Leaks or Defects?	Comments
3000	G						
3001	MV						
3002	G						
3003	T						
3004	PT	51-PT-015					
3005	P						
3006	TT						
3007	P						
3008	TI	TI-032F					
3009	T						
3010	P						
3011	G						
3012	G						
3013	MV						
3014	G						
3015	T						
3016	FT	51-FT-023					
3017	T						
3018	FE						
3019	EJ						
3020	G						
3021	T						
3022	PI						
3023	TI						
3024	TT	51-TT-027					
3025	T						Car seal present.
3026	B						
3027	MV	51-MV-0600					
3028	B						
3029	TI	TI-032M					
3030	T						Car seal present.
3031	TT	51-TT-028					
3032	B						
3033	PT						
3034	T						
3035	PI						
3036	CV	51-PCV-030					
3037	MV	51-MV-0602					
3038	MV	51-MV-0633					Car seal present.
3039	MV	51-MV-0632					
3040	T						
3040A	T						
3041	PT	51-PSH-036					
3041A	PT						
3042	G						
3043	RD						
3044	T						
3045	T						Car seal present.
3046	PI						
3047	FA						
3048	T						
3049	T						Car seal present.
3050	PI						
3051	T						
3051A	T						
3051A	T						
3052	PT	51-PT-038					
3053	TI						
3054	MV	51-MV-0634					
3055	G						
3056	T						
3057	FT	51-FT-040					
3058	T						
3059	G						
3060	L						

Start 3:47 PM 06/07/21 BG-1

End 4:16 PM 06/07/21

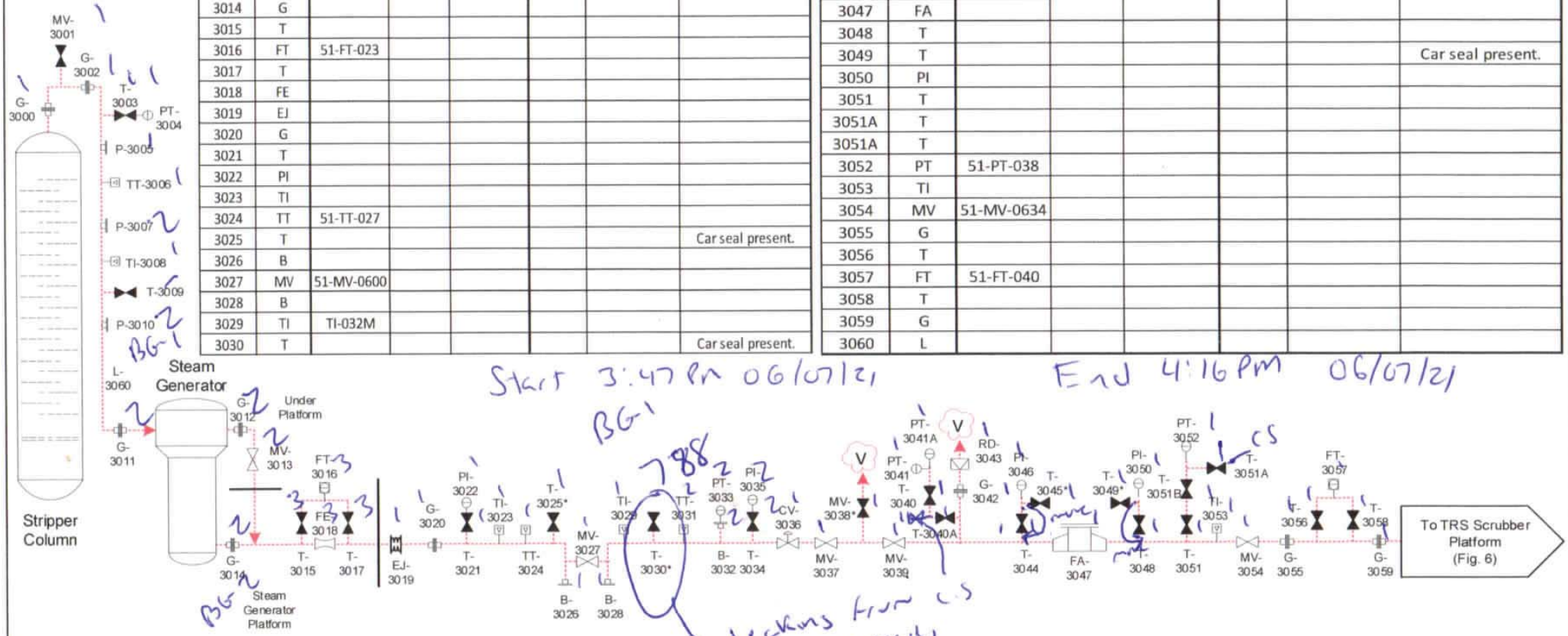

* Indicates car seal present

Vent Gases	To Another Page and Indicated Equipment	ENVIRONMENTAL 360	New-Indy – Catawba Mill
Condensates	From Another Page and Indicated Equipment		LDAR Inspection and Testing Diagrams Stripper Column SOGs
Liquor/Stock Lines			
Process Lines			

Rev. Date July 2020

Figure 3

Combination Boiler SOG and LVHC Incineration

Completed Date/Time: 06/7/21 5:14 PM

Number	Type	Equip. Number	Pressure (+/-)	Background	VOC Reading	Is Component Free of Leaks or Defects?	Comments
5000	G						Renumbered
5001	EJ						
5002	MV	37-MV-0283					
5003	TI						
5004	TT						
5005	T						
5006	PT	37-PT-032					
5007	T						
5008	PI						
5009	FA						
5010	T						
5011	PT						
5012	T						
5013	PI						
5014	G						
5015	EJ						
5016	MV	37-MV-0313					
5017	T						
5018	PT	37-PT-385					
5019	TT	37-TT-384					
5020	P						
5021	FA						
5022	P						
5023	T						
5024	PT	37-PT-383					
5025	G						
5026	EJ						
5027	MV						
5028	TI						
5029	TT	26-TT-034					
5030	T						
5031	PT	26-PT-033					
5034	FA						
5035	T						
5036	PT	26-PT-031					
5037	T						
5038	PI						
5039	G						
5040	EJ						
5041	MV	26-MV-0532					
5042	T						
5043	PT	26-PT-377					
5044	TT						
5045	P						
5046	FA						
5047	P						
5048	T						
5049	PT	26-PT-375					
5050	L						

Start 4:35PM 06/7/21

End 5:14PM

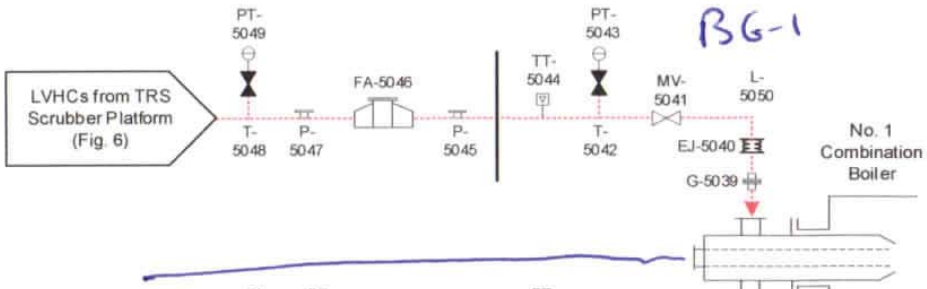

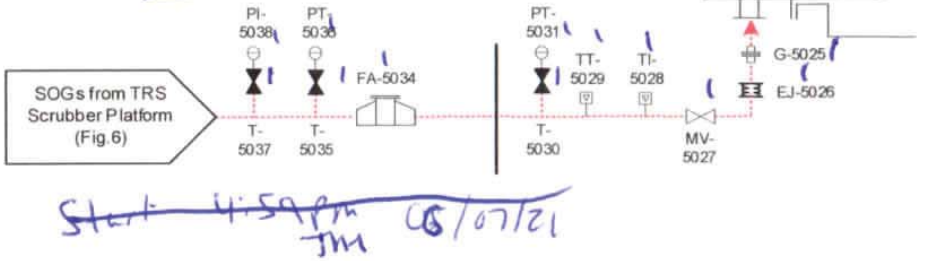

~~Start 4:50 PM~~ JM 06/07/21

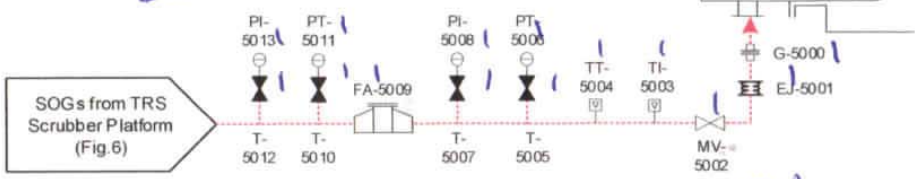

~~BG-0~~ JM BG-1

Vent Gases Condensates Liquor/Stock Lines Process Lines	To Another Page and Indicated Equipment From Another Page and Indicated Equipment	ENVIRONMENTAL 360	New-Indy – Catawba Mill LDAR Inspection and Testing Diagrams Combination Boiler SOG and LVHC Incineration	Rev. Date July 2020 Figure 5

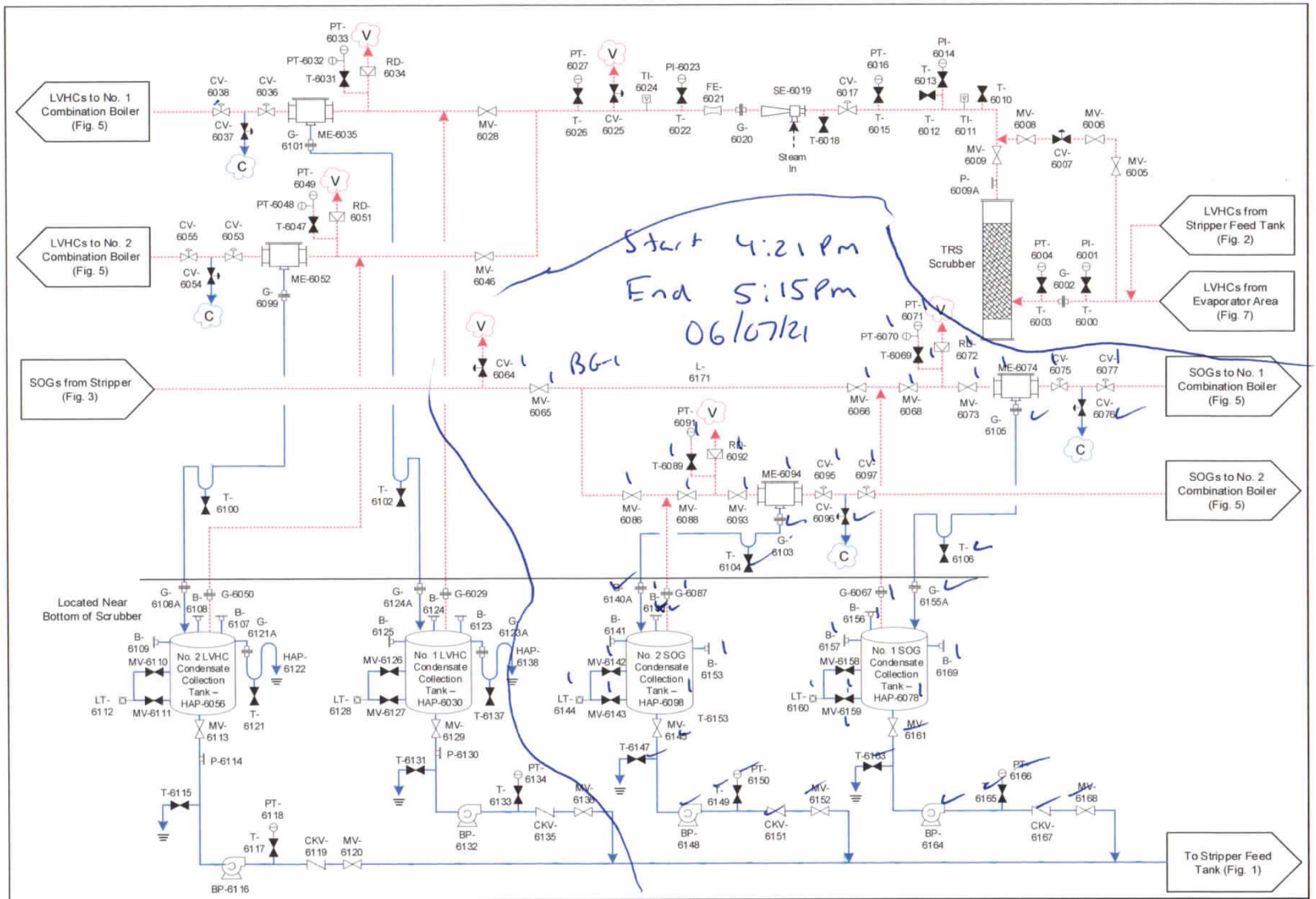

Vent Gases Condensates Liquor/Stock Lines Process Lines	To Another Page and Indicated Equipment From Another Page and Indicated Equipment	ENVIRONMENTAL 360	New-Indy – Catawba Mill LDAR Inspection and Testing Diagrams TRS Scrubber Platform	Rev. Date July 2020 Figure 6

APPENDIX B - WESTON SOLUTIONS AIR EMISSIONS ANALYSIS REPORT

NEW INDY
CONTAINERBOARD

April 16, 2021

Via Electronic Mail (reecemc@dhec.sc.gov)

Myra Reece
Director of Environmental Affairs
South Carolina Department of
Health and Environmental Control
2600 Bull Street
Columbia, South Carolina 29201

Re: New-Indy Catawba LLC – Weston Solutions, Inc. Odor Testing Report

Dear Myra:

As we have discussed, New-Indy has been diligently investigating its operations to determine whether the mill could be the source of odor complaints submitted to DHEC, New-Indy and others. In connection with that review, New-Indy has engaged consultants to evaluate New-Indy's processes for potential odor sources. Consistent with our goal of working cooperatively and professionally with DHEC to identify potential sources of these odors, we introduced one of our consultants to DHEC staff last week to facilitate frank discussion regarding the consultant's work and findings. As we noted in our call last Friday, our consultant Weston Solutions, Inc. is an experienced environmental engineering firm that has been performing testing with respect to odor-related issues since the late 1980's. Weston Solutions personnel who conducted the testing and developed the Testing Report have a combined total of 75 years of emission testing experience. Following up on our conversation last Friday, please find enclosed Weston Solutions' Odor Testing Report.

We engaged Weston Solutions to conduct an expedited screening analysis to determine if the mill is generating significant odors. As you will see from the Testing Report, during the periods of March 16 through 18 and 23 through 25, 2021, Weston Solutions observed mill operations, collected samples from a variety of sources in and around the mill and its wastewater treatment operations, and performed testing to determine if the compounds typically associated with the odor described in the complaints (total reduced sulfur, methanol and terpenes) are present at the New-Indy mill in significant concentrations that would cause such intense odors many miles from the mill. Please note that, although New-Indy still is involved with significant construction and ramp-up activities, the consultants' work was conducted while the mill was in operation. As the Testing Report indicates, Weston Solutions did not detect those compounds in any meaningful concentration that would equate to intense odors. To understand the odor complaints better, Weston Solutions personnel also traveled to several off-site locations. As indicated in the Testing Report, Weston Solutions personnel did not detect off-site mill-type odors, but did detect odors from a fire, and sewage-related odors.

While the Weston Solutions report is a helpful and encouraging screening tool, we are continuing to investigate mill operations and off-site sources in an effort to resolve this situation and will provide additional data as it becomes available. For example, using the Weston Test Report as a basis for further analysis, we have engaged TRC to conduct continuous ambient monitoring of compounds typically associated with odor for an extended monitoring period.

NEW-INDY CONTAINERBOARD LLC
3500 PORSCHE WAY, SUITE 150 • ONTARIO, CALIFORNIA 91764 • WWW.NEWINDYCONTAINERBOARD.COM
PHONE (909) 296-3400 • FAX
(909) 941-5351

Given the public interest in this topic and our interest in working together to resolve this, we would be grateful if you would include Weston's Test Report on DHEC's website with the other reports on this issue. (https://scdhec.gov/environment/environmental-sites-projects-permits-interest/lancaster-york-counties-odor-investigation).

Sincerely,

Tony Hobson
Vice President of Manufacturing

Enclosure

Weston Solutions, Inc.
1625 Pumphrey Avenue
Auburn, Alabama 36832-4303
334-466-5600 ♦ Fax 334-466-5660
www.westonsolutions.com

13 April 2021

Mr. Tony Hobson
New-Indy Catawba, LLC
5300 Cureton Ferry Road
Catawba, South Carolina 29704

Work Order No. 15730.001.006

Re: New-Indy Catawba Mill Odor Testing

Dear Mr. Hobson:

This letter with attachments constitutes our report of odor testing performed at the New-Indy Catawba, South Carolina facility. In an effort to identify potential sources of odor and the constituents, WESTON set up an EPA Method 16 GC to monitor total reduced sulfur (TRS). Data was collected from a single GC with the capability to move to different locations based on wind direction. No significant or sustained ambient TRS was detected at the mill. Wastewater and condensate samples were also collected and analyzed for methanol and terpenes by the Auburn, Alabama laboratory. Mr. Templeton Simpkins, Mr. Chris Hartsky, and Mr. Jack Short of Weston Solutions, Inc. (WESTON®) performed the testing during 16-18 and 23-25 March 2021 for in-house engineering use by New-Indy personnel. The mill was in operation during sampling.

Along with the TRS, methanol, and terpenes testing, New-Indy personnel requested that WESTON travel to several off-site locations in the local area around the mill to determine if there were odors. On Monday, 22 March 2021, WESTON personnel travelled to Rock Hill, South Carolina and stopped at a Marathon gas station at approximately 18:30. An acrid sulfur dioxide (SO_2) smell was detected that WESTON presumes was from a fire in the area. Haze from the presumed fire was observed by WESTON personnel. Several customers were observed rubbing their eyes and commenting on the smoke-like odor. On Wednesday, 24 March 2021, WESTON personnel travelled to Waxhaw, North Carolina and stopped at 16:35 at the Food Lion parking lot, and no odor was detected. WESTON personnel then drove to Indian Land, South Carolina and arrived at 2024 Drawbridge Drive at 18:30. An odor from a possible sewage leak was detected.

Attachment A to this letter presents the results of the testing in tabular form. Attachments B, C, and D include copies of field, laboratory, and quality control data, respectively.

Total reduced sulfur sampling and analysis were conducted according to EPA Reference Method 16. The methanol and terpenes condensate samples were analyzed by NCASI Method DI/MeOH-94.03 and NIOSH Method 1552, respectively.

We appreciate the opportunity to serve you on this project. If you have any questions or require additional information, please call me at 334-466-5627.

Sincerely,

WESTON SOLUTIONS, INC.

Templeton Simpkins
Client Service Manager

Sincerely,

WESTON SOLUTIONS, INC.

Natalie Hammonds
Quality Assurance Manager

jb
Enclosure

SAMPLING LOCATIONS FOR TRS TESTING

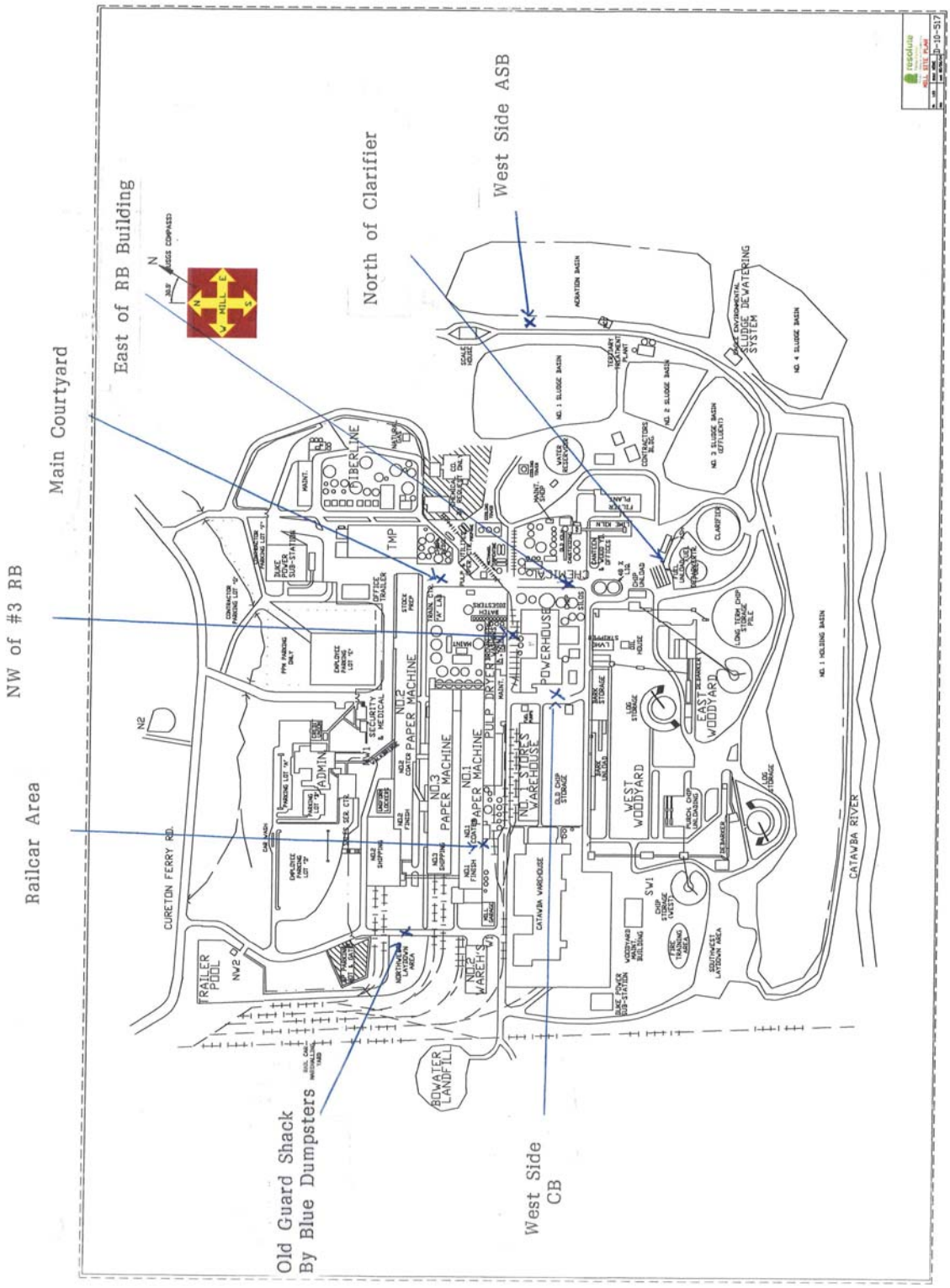
Railcar Area
NW of #3 RB
Main Courtyard
East of RB Building
North of Clarifier
West Side ASB
Old Guard Shack
By Blue Dumpsters
West Side
CB
CATAWBA RIVER
CURETON FERRY RD.
TRAILER POOL
BOWATER LANDFILL
ADMIN
FIBERLINE
TMP
NO.2 PAPER MACHINE
NO.3 PAPER MACHINE
NO.1 PAPER MACHINE
PULP DRYER
POWERHOUSE
NO.1 STORES WAREHOUSE
NO.2 WAREHOUSE
CATAWBA WAREHOUSE
WEST WOODYARD
EAST WOODYARD
ACTIVATION BASIN
NO. 1 SLUDGE BASIN
NO. 2 SLUDGE BASIN
NO. 3 SLUDGE BASIN (LIFTLIGHT)
NO. 4 SLUDGE BASIN
NO. 1 HOLDING BASIN
SLUDGE DEWATERING SYSTEM
CLARIFIER
LONG TERM CHIP STORAGE PILE
SCALE HOUSE
WATER RESERVOIR
MAINT. SHOP
BLUE POWER SUB-STATION
OFFICE TRAILER
STORE PREP
SEC. CTR.
SEC. & MEDICAL
SOUTHWEST LAYDOWN AREA
NORTHWEST LAYDOWN AREA
CHIP STORAGE (WEST)
WOODYARD MAIN BUILDING
BARK STORAGE
LOG STORAGE
OLD CHIP STORAGE
CHIP UNLOADING
PUMPHOUSE
N
MILL
E
S
W

WESTON SOLUTIONS, INC. (WESTON®)
QUALIFICATIONS

Since the company's inception in 1957, WESTON has provided high quality environmental engineering and consulting services to a variety of commercial, industrial and governmental clients. We have been performing emissions testing for more than 40 years and have developed an extensively experienced team of professionals, dedicated to partnering with our clients to achieve their regulatory compliance and operational goals.

WESTON's Auburn Alabama operations has been performing emission testing in support of odor-related compounds including but not limited to speciated sulfur compounds since the late 80's and was instrumental in development of the gas chromatograph (GC) methods such as EPA Method 16 for total reduced sulfur sampling and analysis. Since that time, WESTON has performed hundreds of test programs where we implemented online and continuous GC measurement and analysis for compliance and industrial engineering applications.

Our emissions testing group has over 60 professionals dedicated principally to conducting emissions testing services. Many of our client service managers, project managers, and project leaders have over 20 to 40 years of stack testing experience.

Over the past 40 years, we have performed emissions testing for a wide variety of commercial, industrial, and governmental clients including:

- Power/Utility
- Pulp & Paper
- Chemical
- Wood Products
- Petrochemical/Refineries
- Cement
- Pharmaceutical
- Steel/Specialty Metals
- Manufacturing
- Air Pollution Control Equipment Vendors

WESTON is certified as an Air Emissions Testing Body (AETB) under ASTM D7036 "Standard Practice for Competence of Air Emission Testing Bodies". We have over 25 employees who are certified as Qualified Individuals (QI) in accordance with ASTM D7036 as required by 40 CFR Part 75. Additionally, we have several employees who have received certification as Qualified Stack Testing Individuals (QSTI) from the Source Evaluation Society (SES). QSTI certification is not required by regulation but is an additional step in the assurance of the quality of our staff.

WESTON is a sustaining member of the National Council for Air and Stream Improvement (NCASI) - independent research institute for the forest products industry.

Emission testing services are conducted using resources in three WESTON offices: Auburn, Alabama; West Chester, Pennsylvania; and Houston, Texas.

WESTON SOLUTIONS, INC. (WESTON®)
EMISSION TESTING PRACTICE – AUBURN OPERATIONS
ACCREDITATION STIPULATION

Laboratory:	Weston Solutions, Inc.
Accreditor(s):	Louisiana Environmental Laboratory Accreditation Program (LELAP) – Laboratory and Emission Testing Practice
Accreditation ID:	LELAP – 03024
Scope:	Total Reduced Sulfur, Methanol, and Terpenes Sampling and Analysis
Effective:	LELAP – 21 December 2001
Expires:	LELAP – 30 June 2021

These results meet all requirements of TNI unless otherwise specified.

The results within this report relate only to the samples listed in the body of this report.

Data Qualifiers

The following are general reporting notes that are applicable to all WESTON reports, unless otherwise noted.

- **NL** denotes data that was not from a LELAP accredited method.
- **LNL** denotes lab results that are not from an accredited LELAP laboratory.
- **NN** denotes data that was not from The NELAC Institute (TNI) accredited method.
- **NNL** denotes lab results that are not from an accredited TNI laboratory.
- **ED** denotes data that is not to be used for compliance purposes and may deviate from approved procedures.
- **Q** denotes data whose QA/QC check did not fall within the specified range. This data is still considered valid.
- **A** denotes data that is anomalously high with no explanation for the outlier.
- **BDL** denotes values that were below the limit of detection of the analyzer and 2% of the span gas was used to calculate an emission rate.
- **DF** denotes a dilution factor.
- **NAP** denotes emission testing performed by personnel from a non-TNI accredited laboratory.
- **S** denotes analysis that has been subcontracted.
- All values are reported on a "dry" basis, unless otherwise designated as "actual" or "wet" basis.

ATTACHMENT A
SUMMARY OF RESULTS

Tables A-1 through A-4 present detailed summaries of the results of the emission testing. Measurement uncertainty is not shown in results but has been taken into consideration during method development. Any differences between the calculated results presented in the appendices and the results reported in the summary tables are due to rounding for presentation.

TABLE A-1
SUMMARY OF AMBIENT TRS MONITORING

Date/Time	Location	TRS (ppm)
3/16/21 & 3/17/21 1815-0805	West Side ASB	0.02
3/17/21 0946-1553	West Side ASB	0.02
3/17/21 & 3/18/21 1645-0759	North Clarifier	0.02
3/18/21 1021-1428	Trailer South of Old Guard Shack by Blue Dumpsters	0.03
3/23/21 & 3/24/21 0906-0810	Multiple Locations: East of RB Building in Ally; West Side CB; NW of No. 3 RB Stack; Rail Car Area	0.07
3/24/21 0931-1014	Rail Car Area	0.10
3/24/21 1017-1029	PM Roof Edge	0.00
3/24/21 1031-1043	PM Roof Vent 2	0.00
3/24/21 1058-1540	Multiple Locations: NW Side of Mill	0.03

Table A-2 presents the results of a TRS purge conducted on various process liquids. The purge analysis was conducted to determine the concentration of TRS in each of the liquid samples.

TABLE A-2
SUMMARY OF TRS RESULTS
(25 MARCH 2021)

Source ID	H_2S (µg/mL)	MeSH (µg/mL)	DMS (µg/mL)	DMDS (µg/mL)	TRS as S (µg/mL)
Stripper Feed	48.8	9.3	11.7	6.1	62.2
Acid Sewer	0.13	<0.07	<0.06	0.20	0.26
Clarifier Overflow	0.25	<0.1	1.2	0.57	1.24
ASB Effluent	0.20	<0.1	<0.08	<0.06	0.18
ASB Influent	0.10	<0.06	0.65	0.23	0.58
Screw Press Filtrate	0.14	<0.05	<0.04	<0.03	0.13
PM3 Whitewater	0.04	<0.05	0.18	<0.03	0.13

Table A-3 presents the results of the methanol analysis conducted on various wastewater samples collected during the test program. The samples were prepared and analyzed in accordance with NCASI Method DI/MeOH-94.03.

TABLE A-3
SUMMARY OF METHANOL LABORATORY RESULTS

Source ID	Concentration (µg/mL)
No. 3 Foul Condensate	7,170
No. 3 Combined Condensate	1,210
No. 2 Foul Condensate	2,320
No. 2 Combined Condensate	188
No. 2 Condenser Condensate	1,590
No. 1 Old Condensate	1,340
No. 1 Foul Condensate	688
No. 1 Combined Condensate	103
No. 1 Auxiliary Condensate	2,510
M52-0453 Combined Condensate	539
M52-0432 HVLC Condensate	160
Stripper Feed Tank	1,860
Acid Sewer	43.8
Clarifier Overflow	185
ASB Effluent	49.4
ASB Influent	117
Screw Press Filtrate	54.1
PM3 Whitewater	14.5

Table A-4 presents the results of the terpenes analysis conducted on various wastewater samples collected during the test program. The samples were prepared and analyzed in accordance with NCASI Method 1552.

TABLE A-4
SUMMARY OF TERPENES LABORATORY RESULTS

Source ID	Total Concentration (µg/mL)
No. 3 Foul Condensate	6011
No. 3 Combined Condensate	229
No. 2 Foul Condensate	196
No. 2 Combined Condensate	127
No. 2 Condenser Condensate	516
No. 1 Old Condensate	265
No. 1 Foul Condensate	132
No. 1 Combined Condensate	142
No. 1 Auxiliary Condensate	422
M52-0453 Combined Condensate	166
M52-0432 HVLC Condensate	62.0
Stripper Feed Tank	2,396
Acid Sewer	29.1

ATTACHMENT B
FIELD DATA

ATTACHMENT B

TOTAL REDUCED SULFUR

ATTACHMENT B

16-17 MARCH 2021

RUN SUMMARY

Number 1

Client: **New Indy**
Location: **Catawba, SC**
Source:

Method **16**
Calibration **1**

Project Number: **15730.001.006**
Operator: **T. Simpkins**
Date: **16 Mar 2021**

Start Time 18:15 **End Time** 08:05

Average Measured TRS Conc. 0.02 **ppm**
Recovery Missing

RUN DATA

Number 1

Client: **New Indy**
Location: **Catawba, SC**
Source:

Method **16**
Calibration **1**

Project Number: **15730.001.006**
Operator: **T. Simpkins**
Date: **16 Mar 2021**

Time	H_2S area	H_2S ppm	MeSH area	MeSH ppm	DMS area	DMS ppm	DMDS area	DMDS ppm	TRS ppm
				West Side ASB					
18:15	3	0.04	<2	<0.025	<2	<0.035	2	0.01	0.07
18:18	3	0.05	<2	<0.025	<2	<0.035	<2	<0.009	0.05
18:21	3	0.04	<2	<0.025	<2	<0.035	<2	<0.009	0.04
18:24	3	0.04	<2	<0.025	<2	<0.035	4	0.01	0.07
18:27	3	0.04	<2	<0.025	<2	<0.035	<2	<0.009	0.04
18:30	6	0.06	<2	<0.025	<2	<0.035	<2	<0.009	0.06
18:33	3	0.04	<2	<0.025	<2	<0.035	<2	<0.009	0.04
18:36	<2	<0.035	<2	<0.025	<2	<0.035	<2	<0.009	-
18:39	<2	<0.035	<2	<0.025	<2	<0.035	<2	<0.009	-
18:42	2	0.04	<2	<0.025	<2	<0.035	5	0.02	0.07
18:45	<2	<0.035	<2	<0.025	<2	<0.035	<2	<0.009	-
18:48	<2	<0.035	<2	<0.025	<2	<0.035	2	0.01	0.02
18:51	<2	<0.035	<2	<0.025	<2	<0.035	<2	<0.009	-
18:54	2	0.04	<2	<0.025	<2	<0.035	<2	<0.009	0.04
18:57	2	0.04	<2	<0.025	<2	<0.035	<2	<0.009	0.04
19:00	4	0.05	<2	<0.025	<2	<0.035	<2	<0.009	0.05
19:03	6	0.06	<2	<0.025	<2	<0.035	<2	<0.009	0.06
19:06	<2	<0.035	<2	<0.025	<2	<0.035	<2	<0.009	-
19:09	2	0.04	<2	<0.025	<2	<0.035	<2	<0.009	0.04
19:12	<2	<0.035	<2	<0.025	<2	<0.035	<2	<0.009	-
19:15	3	0.04	<2	<0.025	<2	<0.035	<2	<0.009	0.04
19:18	<2	<0.035	<2	<0.025	<2	<0.035	<2	<0.009	-
19:21	2	0.04	<2	<0.025	<2	<0.035	<2	<0.009	0.04
19:24	2	0.04	<2	<0.025	<2	<0.035	<2	<0.009	0.04
19:27	4	0.05	<2	<0.025	<2	<0.035	<2	<0.009	0.05
19:30	<2	<0.035	<2	<0.025	<2	<0.035	<2	<0.009	-
19:33	3	0.04	<2	<0.025	<2	<0.035	<2	<0.009	0.04
19:36	2	0.04	<2	<0.025	<2	<0.035	3	0.01	0.06
19:39	2	0.03	<2	<0.025	<2	<0.035	<2	<0.009	0.03
19:42	4	0.05	<2	<0.025	4	0.05	<2	<0.009	0.10
19:45	<2	<0.035	<2	<0.025	<2	<0.035	<2	<0.009	-
19:48	2	0.04	<2	<0.025	<2	<0.035	<2	<0.009	0.04
19:51	<2	<0.035	<2	<0.025	<2	<0.035	<2	<0.009	-
19:54	<2	<0.035	<2	<0.025	<2	<0.035	<2	<0.009	-
19:57	<2	<0.035	<2	<0.025	<2	<0.035	<2	<0.009	-
20:00	<2	<0.035	<2	<0.025	<2	<0.035	4	0.01	0.03
20:03	<2	<0.035	<2	<0.025	<2	<0.035	<2	<0.009	-
20:06	<2	<0.035	<2	<0.025	<2	<0.035	<2	<0.009	-
20:09	2	0.04	<2	<0.025	<2	<0.035	<2	<0.009	0.04

RUN DATA

Number 1

Client: **New Indy**
Location: **Catawba, SC**
Source:

Method **16**
Calibration **1**

Project Number: **15730.001.006**
Operator: **T. Simpkins**
Date: **16 Mar 2021**

Time	H_2S		MeSH		DMS		DMDS		TRS
	area	ppm	area	ppm	area	ppm	area	ppm	ppm
20:12	<2	<0.035	<2	<0.025	<2	<0.035	<2	<0.009	-
20:15	3	0.04	<2	<0.025	<2	<0.035	<2	<0.009	0.04
20:18	2	0.04	<2	<0.025	4	0.05	<2	<0.009	0.09
20:21	<2	<0.035	<2	<0.025	<2	<0.035	<2	<0.009	-
20:24	<2	<0.035	<2	<0.025	<2	<0.035	<2	<0.009	-
20:28	<2	<0.035	<2	<0.025	5	0.06	<2	<0.009	0.06
20:31	2	0.04	<2	<0.025	<2	<0.035	<2	<0.009	0.04
20:34	<2	<0.035	<2	<0.025	<2	<0.035	<2	<0.009	-
20:37	<2	<0.035	<2	<0.025	<2	<0.035	<2	<0.009	-
20:40	<2	<0.035	<2	<0.025	<2	<0.035	<2	<0.009	-
20:43	7	0.07	<2	<0.025	<2	<0.035	<2	<0.009	0.07
20:46	3	0.04	<2	<0.025	<2	<0.035	<2	<0.009	0.04
20:49	4	0.05	<2	<0.025	<2	<0.035	<2	<0.009	0.05
20:52	<2	<0.035	<2	<0.025	<2	<0.035	<2	<0.009	-
20:55	<2	<0.035	<2	<0.025	<2	<0.035	<2	<0.009	-
20:58	<2	<0.035	<2	<0.025	<2	<0.035	<2	<0.009	-
21:01	<2	<0.035	<2	<0.025	<2	<0.035	<2	<0.009	-
21:04	<2	<0.035	<2	<0.025	<2	<0.035	<2	<0.009	-
21:07	<2	<0.035	<2	<0.025	<2	<0.035	<2	<0.009	-
21:10	3	0.04	<2	<0.025	<2	<0.035	<2	<0.009	0.04
21:13	<2	<0.035	<2	<0.025	<2	<0.035	<2	<0.009	-
21:16	2	0.04	<2	<0.025	<2	<0.035	5	0.02	0.07
21:19	<2	<0.035	<2	<0.025	<2	<0.035	<2	<0.009	-
21:22	<2	<0.035	<2	<0.025	<2	<0.035	3	0.01	0.02
21:25	<2	<0.035	<2	<0.025	<2	<0.035	<2	<0.009	-
21:28	<2	<0.035	<2	<0.025	<2	<0.035	<2	<0.009	-
21:31	5	0.06	<2	<0.025	<2	<0.035	<2	<0.009	0.06
21:34	3	0.04	<2	<0.025	<2	<0.035	<2	<0.009	0.04
21:37	<2	<0.035	<2	<0.025	<2	<0.035	<2	<0.009	-
21:40	<2	<0.035	<2	<0.025	<2	<0.035	<2	<0.009	-
21:43	<2	<0.035	<2	<0.025	<2	<0.035	2	0.01	0.02
21:46	<2	<0.035	<2	<0.025	<2	<0.035	<2	<0.009	-
21:49	<2	<0.035	<2	<0.025	<2	<0.035	<2	<0.009	-
21:52	<2	<0.035	<2	<0.025	<2	<0.035	<2	<0.009	-
21:55	<2	<0.035	<2	<0.025	<2	<0.035	<2	<0.009	-
21:58	<2	<0.035	<2	<0.025	<2	<0.035	<2	<0.009	-
22:01	<2	<0.035	<2	<0.025	<2	<0.035	<2	<0.009	-
22:04	<2	<0.035	<2	<0.025	<2	<0.035	<2	<0.009	-
22:07	<2	<0.035	<2	<0.025	<2	<0.035	<2	<0.009	-
22:10	<2	<0.035	<2	<0.025	<2	<0.035	<2	<0.009	-

RUN DATA

Number 1

Client: **New Indy**
Location: **Catawba, SC**
Source:

Method **16**
Calibration **1**

Project Number: **15730.001.006**
Operator: **T. Simpkins**
Date: **16 Mar 2021**

Time	H_2S		MeSH		DMS		DMDS		TRS
	area	ppm	area	ppm	area	ppm	area	ppm	ppm
22:13	<2	<0.035	<2	<0.025	<2	<0.035	<2	<0.009	-
22:16	<2	<0.035	<2	<0.025	<2	<0.035	<2	<0.009	-
22:19	2	0.04	<2	<0.025	<2	<0.035	<2	<0.009	0.04
22:22	<2	<0.035	<2	<0.025	<2	<0.035	<2	<0.009	-
22:25	3	0.05	<2	<0.025	<2	<0.035	7	0.02	0.09
22:28	5	0.06	<2	<0.025	<2	<0.035	<2	<0.009	0.06
22:31	4	0.05	<2	<0.025	<2	<0.035	<2	<0.009	0.05
22:34	2	0.04	<2	<0.025	<2	<0.035	<2	<0.009	0.04
22:37	4	0.05	<2	<0.025	<2	<0.035	<2	<0.009	0.05
22:40	5	0.06	<2	<0.025	<2	<0.035	<2	<0.009	0.06
22:43	3	0.04	<2	<0.025	<2	<0.035	<2	<0.009	0.04
22:46	2	0.04	<2	<0.025	<2	<0.035	<2	<0.009	0.04
22:49	<2	<0.035	<2	<0.025	<2	<0.035	<2	<0.009	-
22:52	5	0.06	<2	<0.025	<2	<0.035	<2	<0.009	0.06
22:55	6	0.06	<2	<0.025	5	0.06	<2	<0.009	0.12
22:58	<2	<0.035	<2	<0.025	<2	<0.035	<2	<0.009	-
23:01	<2	<0.035	<2	<0.025	<2	<0.035	3	0.01	0.02
23:04	<2	<0.035	<2	<0.025	<2	<0.035	<2	<0.009	-
23:07	<2	<0.035	<2	<0.025	<2	<0.035	<2	<0.009	-
23:10	4	0.05	<2	<0.025	<2	<0.035	<2	<0.009	0.05
23:13	<2	<0.035	<2	<0.025	<2	<0.035	<2	<0.009	-
23:16	2	0.04	<2	<0.025	<2	<0.035	<2	<0.009	0.04
23:19	<2	<0.035	<2	<0.025	<2	<0.035	<2	<0.009	-
23:22	4	0.05	<2	<0.025	<2	<0.035	<2	<0.009	0.05
23:25	<2	<0.035	<2	<0.025	<2	<0.035	<2	<0.009	-
23:28	2	0.04	<2	<0.025	2	0.04	11	0.03	0.13
23:31	7	0.07	<2	<0.025	3	0.05	<2	<0.009	0.12
23:34	2	0.04	2	0.03	<2	<0.035	<2	<0.009	0.06
23:37	4	0.05	<2	<0.025	<2	<0.035	<2	<0.009	0.05
23:40	8	0.07	<2	<0.025	<2	<0.035	<2	<0.009	0.07
23:43	4	0.06	<2	<0.025	<2	<0.035	<2	<0.009	0.06
23:46	<2	<0.035	<2	<0.025	<2	<0.035	<2	<0.009	-
23:49	9	0.08	<2	<0.025	<2	<0.035	<2	<0.009	0.08
23:52	<2	<0.035	<2	<0.025	<2	<0.035	<2	<0.009	-
23:55	5	0.06	<2	<0.025	<2	<0.035	<2	<0.009	0.06
23:58	<2	<0.035	<2	<0.025	5	0.06	<2	<0.009	0.06
00:01	<2	<0.035	<2	<0.025	<2	<0.035	<2	<0.009	-
00:04	3	0.04	<2	<0.025	<2	<0.035	<2	<0.009	0.04
00:07	<2	<0.035	<2	<0.025	6	0.06	2	0.01	0.08
00:10	<2	<0.035	<2	<0.025	3	0.04	<2	<0.009	0.04

RUN DATA

Number 1

Client: **New Indy**
Location: **Catawba, SC**
Source:

Method **16**
Calibration **1**

Project Number: **15730.001.006**
Operator: **T. Simpkins**
Date: **16 Mar 2021**

Time	H_2S		MeSH		DMS		DMDS		TRS
	area	ppm	area	ppm	area	ppm	area	ppm	ppm
00:13	<2	<0.035	<2	<0.025	<2	<0.035	<2	<0.009	-
00:16	2	0.04	<2	<0.025	<2	<0.035	<2	<0.009	0.04
00:19	35	0.18	<2	<0.025	<2	<0.035	<2	<0.009	0.18
00:22	8	0.07	<2	<0.025	2	0.04	<2	<0.009	0.11
00:25	3	0.04	<2	<0.025	2	0.04	<2	<0.009	0.08
00:28	<2	<0.035	<2	<0.025	5	0.06	<2	<0.009	0.06
00:31	<2	<0.035	<2	<0.025	<2	<0.035	<2	<0.009	-
00:34	<2	<0.035	<2	<0.025	<2	<0.035	<2	<0.009	-
00:37	<2	<0.035	<2	<0.025	<2	<0.035	<2	<0.009	-
00:40	<2	<0.035	<2	<0.025	<2	<0.035	<2	<0.009	-
00:43	<2	<0.035	<2	<0.025	<2	<0.035	<2	<0.009	-
00:46	2	0.04	<2	<0.025	<2	<0.035	<2	<0.009	0.04
00:49	<2	<0.035	<2	<0.025	<2	<0.035	<2	<0.009	-
00:52	<2	<0.035	<2	<0.025	<2	<0.035	<2	<0.009	-
00:55	<2	<0.035	<2	<0.025	<2	<0.035	<2	<0.009	-
00:58	<2	<0.035	<2	<0.025	<2	<0.035	<2	<0.009	-
01:01	<2	<0.035	<2	<0.025	<2	<0.035	<2	<0.009	-
01:04	2	0.04	<2	<0.025	<2	<0.035	<2	<0.009	0.04
01:07	<2	<0.035	<2	<0.025	<2	<0.035	<2	<0.009	-
01:10	<2	<0.035	<2	<0.025	<2	<0.035	3	0.01	0.02
01:13	<2	<0.035	3	0.03	<2	<0.035	<2	<0.009	0.03
01:16	<2	<0.035	<2	<0.025	<2	<0.035	<2	<0.009	-
01:19	2	0.04	<2	<0.025	<2	<0.035	<2	<0.009	0.04
01:22	<2	<0.035	<2	<0.025	<2	<0.035	<2	<0.009	-
01:25	2	0.04	<2	<0.025	<2	<0.035	<2	<0.009	0.04
01:28	7	0.07	<2	<0.025	<2	<0.035	<2	<0.009	0.07
01:31	<2	<0.035	<2	<0.025	<2	<0.035	<2	<0.009	-
01:34	2	0.04	<2	<0.025	4	0.05	<2	<0.009	0.09
01:37	<2	<0.035	<2	<0.025	<2	<0.035	<2	<0.009	-
01:40	<2	<0.035	<2	<0.025	<2	<0.035	<2	<0.009	-
01:43	6	0.06	<2	<0.025	<2	<0.035	<2	<0.009	0.06
01:46	<2	<0.035	<2	<0.025	<2	<0.035	<2	<0.009	-
01:49	2	0.04	<2	<0.025	<2	<0.035	<2	<0.009	0.04
01:52	<2	<0.035	<2	<0.025	<2	<0.035	<2	<0.009	-
01:55	<2	<0.035	<2	<0.025	<2	<0.035	3	0.01	0.02
01:58	<2	<0.035	<2	<0.025	<2	<0.035	<2	<0.009	-
02:01	<2	<0.035	<2	<0.025	<2	<0.035	<2	<0.009	-
02:04	2	0.04	<2	<0.025	<2	<0.035	<2	<0.009	0.04
02:07	4	0.05	<2	<0.025	<2	<0.035	3	0.01	0.08
02:10	<2	<0.035	<2	<0.025	<2	<0.035	<2	<0.009	-

RUN DATA

Number 1

Client: **New Indy**
Location: **Catawba, SC**
Source:

Method **16**
Calibration **1**

Project Number: **15730.001.006**
Operator: **T. Simpkins**
Date: **16 Mar 2021**

Time	H_2S		MeSH		DMS		DMDS		TRS
	area	ppm	area	ppm	area	ppm	area	ppm	ppm
02:13	<2	<0.035	<2	<0.025	<2	<0.035	<2	<0.009	-
02:16	<2	<0.035	<2	<0.025	<2	<0.035	3	0.01	0.02
02:19	<2	<0.035	<2	<0.025	<2	<0.035	<2	<0.009	-
02:22	<2	<0.035	<2	<0.025	<2	<0.035	<2	<0.009	-
02:25	<2	<0.035	<2	<0.025	<2	<0.035	7	0.02	0.04
02:29	<2	<0.035	<2	<0.025	<2	<0.035	<2	<0.009	-
02:32	<2	<0.035	<2	<0.025	<2	<0.035	<2	<0.009	-
02:35	<2	<0.035	<2	<0.025	<2	<0.035	<2	<0.009	-
02:38	<2	<0.035	<2	<0.025	<2	<0.035	<2	<0.009	-
02:41	<2	<0.035	<2	<0.025	3	0.04	<2	<0.009	0.04
02:44	6	0.07	<2	<0.025	<2	<0.035	<2	<0.009	0.07
02:47	<2	<0.035	<2	<0.025	<2	<0.035	<2	<0.009	-
02:50	2	0.04	<2	<0.025	<2	<0.035	<2	<0.009	0.04
02:53	<2	<0.035	<2	<0.025	<2	<0.035	<2	<0.009	-
02:56	<2	<0.035	<2	<0.025	<2	<0.035	<2	<0.009	-
02:59	<2	<0.035	<2	<0.025	<2	<0.035	<2	<0.009	-
03:02	2	0.04	<2	<0.025	<2	<0.035	<2	<0.009	0.04
03:05	<2	<0.035	<2	<0.025	<2	<0.035	3	0.01	0.02
03:08	<2	<0.035	<2	<0.025	<2	<0.035	<2	<0.009	-
03:11	<2	<0.035	<2	<0.025	<2	<0.035	<2	<0.009	-
03:14	<2	<0.035	<2	<0.025	<2	<0.035	<2	<0.009	-
03:17	<2	<0.035	<2	<0.025	<2	<0.035	<2	<0.009	-
03:20	<2	<0.035	<2	<0.025	<2	<0.035	<2	<0.009	-
03:23	<2	<0.035	<2	<0.025	<2	<0.035	<2	<0.009	-
03:26	<2	<0.035	<2	<0.025	<2	<0.035	<2	<0.009	-
03:29	3	0.05	<2	<0.025	<2	<0.035	<2	<0.009	0.05
03:32	<2	<0.035	<2	<0.025	<2	<0.035	<2	<0.009	-
03:35	<2	<0.035	<2	<0.025	<2	<0.035	<2	<0.009	-
03:38	<2	<0.035	7	0.05	<2	<0.035	<2	<0.009	0.05
03:41	<2	<0.035	<2	<0.025	<2	<0.035	4	0.01	0.03
03:44	<2	<0.035	<2	<0.025	<2	<0.035	<2	<0.009	-
03:47	<2	<0.035	<2	<0.025	<2	<0.035	<2	<0.009	-
03:50	<2	<0.035	<2	<0.025	<2	<0.035	<2	<0.009	-
03:53	3	0.05	<2	<0.025	<2	<0.035	<2	<0.009	0.05
03:56	<2	<0.035	<2	<0.025	<2	<0.035	2	0.01	0.02
03:59	<2	<0.035	<2	<0.025	<2	<0.035	<2	<0.009	-
04:02	<2	<0.035	<2	<0.025	<2	<0.035	<2	<0.009	-
04:05	<2	<0.035	<2	<0.025	<2	<0.035	<2	<0.009	-
04:08	<2	<0.035	<2	<0.025	<2	<0.035	<2	<0.009	-
04:11	<2	<0.035	<2	<0.025	<2	<0.035	<2	<0.009	-

RUN DATA

Number 1

Client: **New Indy**
Location: **Catawba, SC**
Source:

Method **16**
Calibration **1**

Project Number: **15730.001.006**
Operator: **T. Simpkins**
Date: **16 Mar 2021**

Time	H_2S		MeSH		DMS		DMDS		TRS
	area	ppm	area	ppm	area	ppm	area	ppm	ppm
04:14	<2	<0.035	<2	<0.025	<2	<0.035	<2	<0.009	-
04:17	<2	<0.035	<2	<0.025	<2	<0.035	<2	<0.009	-
04:20	4	0.05	<2	<0.025	<2	<0.035	<2	<0.009	0.05
04:23	3	0.04	<2	<0.025	<2	<0.035	<2	<0.009	0.04
04:26	5	0.06	<2	<0.025	3	0.04	<2	<0.009	0.10
04:29	7	0.07	<2	<0.025	<2	<0.035	<2	<0.009	0.07
04:32	5	0.06	<2	<0.025	<2	<0.035	<2	<0.009	0.06
04:35	<2	<0.035	<2	<0.025	<2	<0.035	<2	<0.009	-
04:38	3	0.04	<2	<0.025	<2	<0.035	<2	<0.009	0.04
04:41	2	0.04	<2	<0.025	<2	<0.035	2	0.01	0.06
04:44	<2	<0.035	<2	<0.025	<2	<0.035	<2	<0.009	-
04:47	<2	<0.035	<2	<0.025	<2	<0.035	<2	<0.009	-
04:50	4	0.05	<2	<0.025	<2	<0.035	<2	<0.009	0.05
04:53	<2	<0.035	<2	<0.025	<2	<0.035	<2	<0.009	-
04:56	<2	<0.035	<2	<0.025	<2	<0.035	<2	<0.009	-
04:59	3	0.05	<2	<0.025	<2	<0.035	<2	<0.009	0.05
05:02	<2	<0.035	<2	<0.025	<2	<0.035	2	0.01	0.02
05:05	<2	<0.035	<2	<0.025	<2	<0.035	<2	<0.009	-
05:08	<2	<0.035	<2	<0.025	<2	<0.035	<2	<0.009	-
05:11	<2	<0.035	<2	<0.025	<2	<0.035	<2	<0.009	-
05:14	<2	<0.035	<2	<0.025	<2	<0.035	<2	<0.009	-
05:17	2	0.04	<2	<0.025	<2	<0.035	<2	<0.009	0.04
05:20	<2	<0.035	<2	<0.025	<2	<0.035	<2	<0.009	-
05:23	<2	<0.035	<2	<0.025	<2	<0.035	<2	<0.009	-
05:26	<2	<0.035	<2	<0.025	3	0.04	<2	<0.009	0.04
05:29	<2	<0.035	<2	<0.025	<2	<0.035	<2	<0.009	-
05:32	<2	<0.035	<2	<0.025	<2	<0.035	3	0.01	0.02
05:35	<2	<0.035	<2	<0.025	<2	<0.035	4	0.01	0.03
05:38	<2	<0.035	<2	<0.025	<2	<0.035	<2	<0.009	-
05:41	<2	<0.035	<2	<0.025	<2	<0.035	<2	<0.009	-
05:44	<2	<0.035	<2	<0.025	<2	<0.035	<2	<0.009	-
05:47	<2	<0.035	<2	<0.025	<2	<0.035	<2	<0.009	-
05:50	4	0.05	<2	<0.025	<2	<0.035	<2	<0.009	0.05
05:53	<2	<0.035	<2	<0.025	<2	<0.035	<2	<0.009	-
05:56	<2	<0.035	<2	<0.025	<2	<0.035	<2	<0.009	-
05:59	<2	<0.035	<2	<0.025	<2	<0.035	3	0.01	0.02
06:02	<2	<0.035	<2	<0.025	<2	<0.035	<2	<0.009	-
06:05	<2	<0.035	<2	<0.025	<2	<0.035	<2	<0.009	-
06:08	6	0.06	<2	<0.025	<2	<0.035	<2	<0.009	0.06
06:11	<2	<0.035	<2	<0.025	<2	<0.035	<2	<0.009	-

RUN DATA

Number 1

Client: **New Indy**
Location: **Catawba, SC**
Source:

Method **16**
Calibration **1**

Project Number: **15730.001.006**
Operator: **T. Simpkins**
Date: **16 Mar 2021**

Time	H_2S		MeSH		DMS		DMDS		TRS
	area	ppm	area	ppm	area	ppm	area	ppm	ppm
06:14	<2	<0.035	<2	<0.025	<2	<0.035	<2	<0.009	-
06:17	<2	<0.035	<2	<0.025	<2	<0.035	<2	<0.009	-
06:20	<2	<0.035	<2	<0.025	<2	<0.035	3	0.01	0.03
06:23	3	0.04	<2	<0.025	<2	<0.035	<2	<0.009	0.04
06:26	<2	<0.035	<2	<0.025	<2	<0.035	<2	<0.009	-
06:29	<2	<0.035	<2	<0.025	<2	<0.035	<2	<0.009	-
06:32	<2	<0.035	<2	<0.025	<2	<0.035	<2	<0.009	-
06:35	3	0.05	<2	<0.025	<2	<0.035	2	0.01	0.07
06:38	<2	<0.035	<2	<0.025	<2	<0.035	<2	<0.009	-
06:41	<2	<0.035	<2	<0.025	<2	<0.035	<2	<0.009	-
06:44	<2	<0.035	<2	<0.025	<2	<0.035	3	0.01	0.03
06:47	<2	<0.035	<2	<0.025	<2	<0.035	<2	<0.009	-
06:50	<2	<0.035	<2	<0.025	<2	<0.035	<2	<0.009	-
06:53	<2	<0.035	<2	<0.025	<2	<0.035	<2	<0.009	-
06:56	2	0.04	<2	<0.025	<2	<0.035	<2	<0.009	0.04
06:59	<2	<0.035	<2	<0.025	<2	<0.035	<2	<0.009	-
07:02	<2	<0.035	<2	<0.025	<2	<0.035	<2	<0.009	-
07:05	<2	<0.035	<2	<0.025	<2	<0.035	<2	<0.009	-
07:08	<2	<0.035	<2	<0.025	<2	<0.035	<2	<0.009	-
07:11	<2	<0.035	4	0.04	<2	<0.035	<2	<0.009	0.04
07:14	<2	<0.035	<2	<0.025	<2	<0.035	<2	<0.009	-
07:17	<2	<0.035	<2	<0.025	<2	<0.035	<2	<0.009	-
07:20	<2	<0.035	<2	<0.025	<2	<0.035	<2	<0.009	-
07:23	<2	<0.035	<2	<0.025	<2	<0.035	<2	<0.009	-
07:26	<2	<0.035	<2	<0.025	<2	<0.035	<2	<0.009	-
07:29	<2	<0.035	<2	<0.025	<2	<0.035	<2	<0.009	-
07:32	<2	<0.035	<2	<0.025	<2	<0.035	<2	<0.009	-
07:35	6	0.07	<2	<0.025	<2	<0.035	2	0.01	0.09
07:38	<2	<0.035	<2	<0.025	<2	<0.035	<2	<0.009	-
07:41	<2	<0.035	<2	<0.025	<2	<0.035	<2	<0.009	-
07:44	<2	<0.035	<2	<0.025	<2	<0.035	<2	<0.009	-
07:47	6	0.06	<2	<0.025	<2	<0.035	<2	<0.009	0.06
07:50	<2	<0.035	<2	<0.025	<2	<0.035	<2	<0.009	-
07:53	<2	<0.035	<2	<0.025	<2	<0.035	<2	<0.009	-
07:56	<2	<0.035	<2	<0.025	<2	<0.035	2	0.01	0.02
07:59	<2	<0.035	<2	<0.025	<2	<0.035	<2	<0.009	-
08:02	<2	<0.035	<2	<0.025	<2	<0.035	<2	<0.009	-
Average		**<0.035**		**<0.025**		**<0.035**		**<0.009**	-

CALIBRATION DATA

Number 1

Client: **New Indy**
Location: **Catawba, SC**
Source:

Method **16**

Project Number: **15730.001.006**
Operator: **T. Simpkins**
Date: **15 Mar 2021**

Ambient Temperature: 72°C **Barometric Pressure:** 30.20 in. Hg

Analyte	**H_2S**	**MeSH**	**DMS**	**DMDS**
Perm. Device ID	T-53950	33-56671	89-56661	89-56665
Perm. Rate, nL/min	422	455	306	217
Ret. Time, sec	19.0	32.5	70.0	125.0

1 Flow = **49.5** mL/Min	**8.53** ppm	**9.20** ppm	**6.18** ppm	**4.39** ppm
Time: 13:19		**Peak Areas, mv-sec**		
	32537	39496	20950	58413
	32418	39230	21200	58902
	31825	38696	21077	58586
Average Area	**32260**	**39141**	**21076**	**58634**
2 Flow = **108** mL/Min	**3.92** ppm	**4.22** ppm	**2.83** ppm	**2.01** ppm
Time: 13:46		**Peak Areas, mv-sec**		
	8799	12079	5689	18833
	9054	11850	5632	17770
	8930	11712	5606	17267
Average Area	**8928**	**11880**	**5642**	**17956**
3 Flow = **263** mL/Min	**1.61** ppm	**1.73** ppm	**1.16** ppm	**0.83** ppm
Time: 13:59		**Peak Areas, mv-sec**		
	1643	2427	1065	3746
	1726	2386	1071	3552
	1698	2306	1049	3468
Average Area	**1689**	**2373**	**1062**	**3589**

CALIBRATION SUMMARY

Number 1

Client: **New Indy**
Location: **Catawba, SC**
Source:

Method **16**

Project Number: **15730.001.006**
Operator: **T. Simpkins**
Date: **15 Mar 2021**

H_2S	1	2	3		
Time	13:19	13:46	13:59		
Concentration, ppm	8.53	3.92	1.61		
Area, mv-sec	32260	8928	1689		
Calc. Conc., ppm	8.38	4.05	1.58		
% Error	-1.8	3.5	-1.6		
Calibration Curve	Slope	Intercept	Corr. Coeff.	Min. Area	Det. Lim.
	1.7682	2.8763	0.9994	2	0.035

MeSH	1	2	3		
Time	13:19	13:46	13:59		
Concentration, ppm	9.20	4.22	1.73		
Area, mv-sec	39141	11880	2373		
Calc. Conc., ppm	8.98	4.42	1.69		
% Error	-2.4	4.7	-2.1		
Calibration Curve	Slope	Intercept	Corr. Coeff.	Min. Area	Det. Lim.
	1.6811	2.9904	0.9989	2	0.025

DMS	1	2	3		
Time	13:19	13:46	13:59		
Concentration, ppm	6.18	2.83	1.16		
Area, mv-sec	21076	5642	1062		
Calc. Conc., ppm	6.09	2.92	1.15		
% Error	-1.5	2.9	-1.3		
Calibration Curve	Slope	Intercept	Corr. Coeff.	Min. Area	Det. Lim.
	1.7909	2.9192	0.9996	2	0.035

DMDS	1	2	3		
Time	13:19	13:46	13:59		
Concentration, ppm	4.39	2.01	0.83		
Area, mv-sec	58634	17956	3589		
Calc. Conc., ppm	4.28	2.11	0.81		
% Error	-2.5	4.9	-2.2		
Calibration Curve	Slope	Intercept	Corr. Coeff.	Min. Area	Det. Lim.
	1.6755	3.7107	0.9988	2	0.009

CALIBRATION DATA

Number 2

Client: **New Indy**
Location: **Catawba, SC**
Source:

Method **16**

Project Number: **15730.001.006**
Operator: **T. Simpkins**
Date: **17 Mar 2021**

Ambient Temperature: 72°C **Barometric Pressure:** 30.20 in. Hg

Analyte	**H_2S**	**MeSH**	**DMS**	**DMDS**
Perm. Device ID	T-53950	33-56671	89-56661	89-56665
Perm. Rate, nL/min	422	455	306	217
Ret. Time, sec	19.0	32.5	70.0	125.0

1 Flow = **43.1** mL/Min	**9.80** ppm	**10.6** ppm	**7.09** ppm	**5.04** ppm
Time: 08:28		**Peak Areas, mv-sec**		
	32885	40065	21703	62655
	32377	40847	22337	64423
	33445	40700	22722	65189
Average Area	**32902**	**40537**	**22254**	**64089**
2 Flow = **91.6** mL/Min	**4.61** ppm	**4.97** ppm	**3.34** ppm	**2.37** ppm
Time: 08:45		**Peak Areas, mv-sec**		
	10234	12405	6217	19301
	9896	12664	6278	19254
	10029	12369	6218	19511
Average Area	**10053**	**12479**	**6238**	**19355**
3 Flow = **215** mL/Min	**1.96** ppm	**2.12** ppm	**1.42** ppm	**1.01** ppm
Time: 09:10		**Peak Areas, mv-sec**		
	2028	2745	1321	4433
	2061	2708	1308	4367
	2026	2706	1300	4291
Average Area	**2038**	**2720**	**1310**	**4364**

CALIBRATION SUMMARY

Number 2

Client: **New Indy**
Location: **Catawba, SC**
Source:

Method **16**

Project Number: **15730.001.006**
Operator: **T. Simpkins**
Date: **17 Mar 2021**

H_2S	1	2	3		
Time	08:28	08:45	09:10		
Concentration, ppm	9.80	4.61	1.96		
Area, mv-sec	32902	10053	2038		
Calc. Conc., ppm	9.56	4.83	1.92		
% Error	-2.4	4.7	-2.1		
Calibration Curve	Slope	Intercept	Corr. Coeff.	Min. Area	Det. Lim.
	1.7338	2.8171	0.9988	2	0.035

MeSH	1	2	3		
Time	08:28	08:45	09:10		
Concentration, ppm	10.6	4.97	2.12		
Area, mv-sec	40537	12479	2720		
Calc. Conc., ppm	10.4	5.15	2.08		
% Error	-1.9	3.6	-1.6		
Calibration Curve	Slope	Intercept	Corr. Coeff.	Min. Area	Det. Lim.
	1.6833	2.8984	0.9993	2	0.029

DMS	1	2	3		
Time	08:28	08:45	09:10		
Concentration, ppm	7.09	3.34	1.42		
Area, mv-sec	22254	6238	1310		
Calc. Conc., ppm	7.01	3.41	1.41		
% Error	-1.1	2.2	-1.0		
Calibration Curve	Slope	Intercept	Corr. Coeff.	Min. Area	Det. Lim.
	1.7640	2.8552	0.9997	2	0.036

DMDS	1	2	3		
Time	08:28	08:45	09:10		
Concentration, ppm	5.04	2.37	1.01		
Area, mv-sec	64089	19355	4364		
Calc. Conc., ppm	4.97	2.43	1.00		
% Error	-1.3	2.5	-1.2		
Calibration Curve	Slope	Intercept	Corr. Coeff.	Min. Area	Det. Lim.
	1.6735	3.6414	0.9996	2	0.010

ANALYTES AND STANDARDS

Client: **New Indy**
Location: **Catawba, SC**
Source:

Method **16**

Project Number: **15730.001.006**
Operator: **T. Simpkins**
Date: **15 Mar 2021**

Analyte	H_2S	MeSH	DMS	DMDS
Molecular Weight	34.08	48.11	62.14	94.20
Retention Time, sec	19.0	32.5	70.0	125.0
Peak Detection Window, sec	3.0	5.0	10.0	10.0
Minimum Peak Area, mv-sec	2	2	2	2
Minimum Peak Height, mv	1	1	1	1
Beginning Peak Width, sec	1.0	1.0	2.0	3.0
Ending Peak Width, sec	2.0	3.0	4.0	5.0
Permeation Device ID	T-53950	33-56671	89-56661	89-56665
Permeation Rate, ng/min	600	913	792	852
Permeation Rate, nL/min*	422	455	306	217

Barometric Pressure: 30.20 in. Hg **Ambient Temperature:** 72 °F
No Oxygen Correction

*Permeation rates are gravimetrically determined by the manufacturer with results by weight in ng/min. Permeation rates by volume, in nL/min, are calculated from the permeation rates by weight as follows:

$$PR_{nl} = PR_{ng} \times (V_{mol} / W_{mol}) \times [(460° + T_a) / T_s] \times (P_s / P_b)$$

Where:

PR_{nl} = Permeation Rate by volume, nL/min
PR_{ng} = Permeation Rate by weight, ng/min
V_{mol} = Molar Volume of any gas @32 °F & 29.92 mm Hg = 22.4 L/mole
W_{mol} = Molecular Weight of compound
T_a = Ambient Temperature, °F
T_s = Standard Temperature = 492°R (32 °F)
P_s = Standard Pressure = 29.92 in Hg
P_b = Barometric Pressure, in Hg

For example, H_2S:

$$PR_{nl} = 600 \times (22.4 / 34.08) \times [(460 + 72) / 492] \times (29.92 / 30.20)$$
$$= 422 \text{ nL/min}$$

To calclate concentrations:

$$C = PR_{nl} / F_d$$

Where:

C = Concentration, ppmv
PR_{nl} = Permeation Rate by volume, nL/min
F_d = Flow rate of diluent, mL/min

INSTRUMENT INFORMATION

Client: **New Indy**
Location: **Catawba, SC**
Source:

Method **16**

Project Number: **15730.001.006**
Operator: **T. Simpkins**
Date: **15 Mar 2021**

File: C:\Data\TrsData1.trs
Program Version: 2.0, built 15 May 2017 **File Version:** 2.0
Computer: DESKTOP-A1IJDGT **Trailer:** 88

Analog Input Device: Keithley KUSB-3108 **GC Channel:** 16

Sampling Rate: 0.050 sec. **Data Interval:** 0.5 sec.

Gas Chromatograph: Shimadzu GC8A **Serial No.** GC 1
Detector Range: 10

Gases

	Press. psi	Flow mL/min
H_2	30	50
Air	30	60
Carrier	50	30

Temperatures, °C

Column: 100
Detector: 120

Columns

Primary: Carbopack
Secondary: N/A
Sample Loop: 4"

Injection Cycle

Total Length: 180 sec **Sampling Time:** 170 sec **Load/Backflush Time:** 80 sec

Default Integration Parameters

Signal Threshold 0.67 mv **Peak detection window** ±10 sec
Minimum peak area 2 mv-sec **Minimum peak height** 1 mv above baseline

Dynacalibrator

Chamber Temperature 50.0°C
Ambient Temperature 72.0°F
Barometric Pressure 30.20 in. Hg

ATTACHMENT B

17-18 MARCH 2021

RUN SUMMARY

Number 1

Client:	**New Indy**		Project Number: **15730.001.006**
Location:	**Catawba, SC**	Method **16**	Operator: **T. Simpkins**
Source:		Calibration **1**	Date: **17 Mar 2021**

Start Time 09:46 **End Time** 15:53

Average Measured TRS Conc. 0.02 **ppm**
Recovery Missing

RUN SUMMARY

Number 3

Client:	**New Indy**		Project Number: **15730.001.006**
Location:	**Catawba, SC**	Method **16**	Operator: **T. Simpkins**
Source:		Calibration **1**	Date: **17 Mar 2021**

Start Time 16:45 **End Time** 07:59

Average Measured TRS Conc. 0.02 **ppm**
Recovery Missing

RUN DATA

Number 1

Client: **New Indy**
Location: **Catawba, SC**
,Source:

Method **16**
Calibration **1**

Project Number: **15730.001.006**
Operator: **T. Simpkins**
Date: **17 Mar 2021**

Time	H_2S		MeSH		DMS		DMDS		TRS
	area	ppm	area	ppm	area	ppm	area	ppm	ppm
09:46	<2	<0.029	<2	<0.024	<2	<0.030	<2	<0.008	-
09:46	2	0.03	<2	<0.024	<2	<0.030	<2	<0.008	0.03
09:49	2	0.03	<2	<0.024	<2	<0.030	<2	<0.008	0.03
09:52	4	0.04	<2	<0.024	<2	<0.030	<2	<0.008	0.04
09:55	<2	<0.029	<2	<0.024	<2	<0.030	<2	<0.008	-
09:58	3	0.04	<2	<0.024	<2	<0.030	<2	<0.008	0.04
10:01	<2	<0.029	<2	<0.024	<2	<0.030	<2	<0.008	-
10:04	3	0.04	<2	<0.024	<2	<0.030	<2	<0.008	0.04
10:07	<2	<0.029	<2	<0.024	<2	<0.030	<2	<0.008	-
10:10	2	0.03	<2	<0.024	<2	<0.030	2	0.01	0.05
10:13	<2	<0.029	<2	<0.024	<2	<0.030	<2	<0.008	-
10:16	2	0.03	<2	<0.024	<2	<0.030	<2	<0.008	0.03
10:19	<2	<0.029	<2	<0.024	<2	<0.030	<2	<0.008	-
10:22	<2	<0.029	<2	<0.024	<2	<0.030	<2	<0.008	-
10:25	2	0.03	<2	<0.024	<2	<0.030	<2	<0.008	0.03
10:28	5	0.05	<2	<0.024	<2	<0.030	<2	<0.008	0.05
10:31	2	0.03	<2	<0.024	<2	<0.030	<2	<0.008	0.03
10:34	<2	<0.029	<2	<0.024	<2	<0.030	<2	<0.008	-
10:37	2	0.03	<2	<0.024	<2	<0.030	<2	<0.008	0.03
10:41	2	0.03	<2	<0.024	<2	<0.030	<2	<0.008	0.03
10:44	2	0.03	<2	<0.024	<2	<0.030	<2	<0.008	0.03
10:47	<2	<0.029	<2	<0.024	<2	<0.030	<2	<0.008	-
10:50	5	0.05	<2	<0.024	<2	<0.030	<2	<0.008	0.05
10:53	6	0.05	<2	<0.024	<2	<0.030	<2	<0.008	0.05
10:56	3	0.03	<2	<0.024	<2	<0.030	<2	<0.008	0.03
10:59	7	0.06	<2	<0.024	<2	<0.030	<2	<0.008	0.06
11:02	5	0.05	<2	<0.024	<2	<0.030	<2	<0.008	0.05
11:05	<2	<0.029	<2	<0.024	<2	<0.030	<2	<0.008	-
11:08	<2	<0.029	<2	<0.024	<2	<0.030	<2	<0.008	-
11:11	2	0.03	<2	<0.024	<2	<0.030	<2	<0.008	0.03
11:14	<2	<0.029	<2	<0.024	<2	<0.030	<2	<0.008	-
11:17	<2	<0.029	<2	<0.024	<2	<0.030	<2	<0.008	-
11:20	<2	<0.029	3	0.03	<2	<0.030	<2	<0.008	0.03
11:23	8	0.06	<2	<0.024	2	0.03	6	0.02	0.13
11:26	<2	<0.029	3	0.03	<2	<0.030	3	0.01	0.05
11:29	<2	<0.029	<2	<0.024	<2	<0.030	<2	<0.008	-
11:32	<2	<0.029	<2	<0.024	<2	<0.030	<2	<0.008	-
11:35	<2	<0.029	<2	<0.024	<2	<0.030	<2	<0.008	-
11:38	<2	<0.029	<2	<0.024	<2	<0.030	<2	<0.008	-
11:41	<2	<0.029	<2	<0.024	<2	<0.030	<2	<0.008	-

RUN DATA

Number 1

Client: **New Indy**
Location: **Catawba, SC**
Source:

Method **16**
Calibration **1**

Project Number: **15730.001.006**
Operator: **T. Simpkins**
Date: **17 Mar 2021**

Time	H_2S		MeSH		DMS		DMDS		TRS
	area	ppm	area	ppm	area	ppm	area	ppm	ppm
11:44	3	0.03	<2	<0.024	<2	<0.030	<2	<0.008	0.03
11:47	<2	<0.029	<2	<0.024	<2	<0.030	<2	<0.008	-
11:50	<2	<0.029	<2	<0.024	<2	<0.030	<2	<0.008	-
11:53	<2	<0.029	<2	<0.024	<2	<0.030	<2	<0.008	-
11:56	<2	<0.029	<2	<0.024	<2	<0.030	<2	<0.008	-
11:59	<2	<0.029	<2	<0.024	<2	<0.030	<2	<0.008	-
12:02	<2	<0.029	<2	<0.024	<2	<0.030	<2	<0.008	-
12:05	<2	<0.029	<2	<0.024	<2	<0.030	<2	<0.008	-
12:08	<2	<0.029	<2	<0.024	<2	<0.030	<2	<0.008	-
12:11	<2	<0.029	<2	<0.024	<2	<0.030	<2	<0.008	-
12:14	<2	<0.029	<2	<0.024	<2	<0.030	<2	<0.008	-
12:17	3	0.04	<2	<0.024	<2	<0.030	<2	<0.008	0.04
12:20	<2	<0.029	<2	<0.024	<2	<0.030	<2	<0.008	-
12:23	3	0.04	<2	<0.024	2	0.03	<2	<0.008	0.07
12:26	3	0.04	<2	<0.024	<2	<0.030	<2	<0.008	0.04
12:29	2	0.03	<2	<0.024	<2	<0.030	<2	<0.008	0.03
12:32	<2	<0.029	<2	<0.024	<2	<0.030	<2	<0.008	-
12:35	<2	<0.029	<2	<0.024	<2	<0.030	<2	<0.008	-
12:38	<2	<0.029	<2	<0.024	<2	<0.030	<2	<0.008	-
12:41	<2	<0.029	<2	<0.024	<2	<0.030	<2	<0.008	-
12:44	<2	<0.029	<2	<0.024	<2	<0.030	<2	<0.008	-
12:47	7	0.06	<2	<0.024	<2	<0.030	<2	<0.008	0.06
12:50	<2	<0.029	<2	<0.024	<2	<0.030	<2	<0.008	-
12:53	<2	<0.029	<2	<0.024	<2	<0.030	<2	<0.008	-
12:56	<2	<0.029	<2	<0.024	<2	<0.030	<2	<0.008	-
12:59	<2	<0.029	<2	<0.024	<2	<0.030	<2	<0.008	-
13:02	3	0.04	<2	<0.024	4	0.04	<2	<0.008	0.08
13:05	<2	<0.029	<2	<0.024	<2	<0.030	<2	<0.008	-
13:08	<2	<0.029	<2	<0.024	<2	<0.030	3	0.01	0.02
13:11	<2	<0.029	<2	<0.024	<2	<0.030	<2	<0.008	-
13:14	2	0.03	<2	<0.024	<2	<0.030	<2	<0.008	0.03
13:17	<2	<0.029	<2	<0.024	<2	<0.030	<2	<0.008	-
13:20	3	0.04	<2	<0.024	<2	<0.030	<2	<0.008	0.04
13:23	<2	<0.029	<2	<0.024	<2	<0.030	<2	<0.008	-
13:26	<2	<0.029	<2	<0.024	<2	<0.030	2	0.01	0.02
13:29	<2	<0.029	<2	<0.024	<2	<0.030	<2	<0.008	-
13:32	<2	<0.029	<2	<0.024	<2	<0.030	<2	<0.008	-
13:35	<2	<0.029	<2	<0.024	<2	<0.030	<2	<0.008	-
13:38	<2	<0.029	<2	<0.024	<2	<0.030	<2	<0.008	-
13:41	<2	<0.029	<2	<0.024	<2	<0.030	<2	<0.008	-

RUN DATA

Number 1

Client: **New Indy**
Location: **Catawba, SC**
Source:

Method **16**
Calibration **1**

Project Number: **15730.001.006**
Operator: **T. Simpkins**
Date: **17 Mar 2021**

Time	H_2S		MeSH		DMS		DMDS		TRS
	area	ppm	area	ppm	area	ppm	area	ppm	ppm
13:44	<2	<0.029	<2	<0.024	<2	<0.030	<2	<0.008	-
13:47	<2	<0.029	<2	<0.024	<2	<0.030	<2	<0.008	-
13:50	7	0.06	<2	<0.024	<2	<0.030	<2	<0.008	0.06
13:53	9	0.07	2	0.03	<2	<0.030	<2	<0.008	0.10
13:56	<2	<0.029	<2	<0.024	<2	<0.030	<2	<0.008	-
13:59	<2	<0.029	3	0.03	<2	<0.030	3	0.01	0.05
14:02	8	0.07	<2	<0.024	<2	<0.030	<2	<0.008	0.07
14:05	7	0.06	<2	<0.024	2	0.03	<2	<0.008	0.09
14:08	<2	<0.029	<2	<0.024	<2	<0.030	<2	<0.008	-
14:11	<2	<0.029	<2	<0.024	<2	<0.030	3	0.01	0.02
14:14	4	0.05	<2	<0.024	<2	<0.030	<2	<0.008	0.05
14:17	<2	<0.029	<2	<0.024	<2	<0.030	<2	<0.008	-
14:20	<2	<0.029	<2	<0.024	<2	<0.030	<2	<0.008	-
14:23	<2	<0.029	<2	<0.024	<2	<0.030	<2	<0.008	-
14:26	3	0.04	<2	<0.024	<2	<0.030	<2	<0.008	0.04
14:29	<2	<0.029	<2	<0.024	<2	<0.030	<2	<0.008	-
14:32	6	0.06	<2	<0.024	<2	<0.030	<2	<0.008	0.06
14:35	<2	<0.029	<2	<0.024	<2	<0.030	<2	<0.008	-
14:38	<2	<0.029	<2	<0.024	<2	<0.030	<2	<0.008	-
14:41	<2	<0.029	<2	<0.024	<2	<0.030	<2	<0.008	-
14:44	3	0.03	<2	<0.024	<2	<0.030	<2	<0.008	0.03
14:47	3	0.04	<2	<0.024	<2	<0.030	3	0.01	0.06
14:50	<2	<0.029	<2	<0.024	<2	<0.030	<2	<0.008	-
14:53	2	0.03	2	0.03	<2	<0.030	<2	<0.008	0.06
14:56	<2	<0.029	<2	<0.024	<2	<0.030	<2	<0.008	-
14:59	<2	<0.029	<2	<0.024	<2	<0.030	4	0.01	0.03
15:02	<2	<0.029	<2	<0.024	2	0.03	<2	<0.008	0.03
15:05	<2	<0.029	<2	<0.024	<2	<0.030	<2	<0.008	-
15:08	<2	<0.029	<2	<0.024	<2	<0.030	<2	<0.008	-
15:11	3	0.04	<2	<0.024	<2	<0.030	<2	<0.008	0.04
15:14	<2	<0.029	<2	<0.024	3	0.03	<2	<0.008	0.03
15:17	<2	<0.029	<2	<0.024	<2	<0.030	<2	<0.008	-
15:20	3	0.04	<2	<0.024	<2	<0.030	<2	<0.008	0.04
15:23	<2	<0.029	<2	<0.024	<2	<0.030	<2	<0.008	-
15:26	<2	<0.029	<2	<0.024	<2	<0.030	<2	<0.008	-
15:29	<2	<0.029	<2	<0.024	<2	<0.030	<2	<0.008	-
15:32	<2	<0.029	<2	<0.024	<2	<0.030	3	0.01	0.02
15:35	<2	<0.029	<2	<0.024	<2	<0.030	<2	<0.008	-
15:38	<2	<0.029	<2	<0.024	<2	<0.030	<2	<0.008	-
15:41	<2	<0.029	<2	<0.024	<2	<0.030	<2	<0.008	-

RUN DATA

Number 1

Client: **New Indy**
Location: **Catawba, SC**
Source:

Method **16**
Calibration **1**

Project Number: **15730.001.006**
Operator: **T. Simpkins**
Date: **17 Mar 2021**

Time	H_2S		MeSH		DMS		DMDS		TRS
	area	ppm	area	ppm	area	ppm	area	ppm	ppm
15:44	3	0.04	<2	<0.024	<2	<0.030	5	0.01	0.06
15:47	3	0.04	<2	<0.024	<2	<0.030	<2	<0.008	0.04
15:50	<2	<0.029	<2	<0.024	<2	<0.030	<2	<0.008	-
Average		**<0.029**		**<0.024**		**<0.030**		**<0.008**	**-**

RUN DATA

Number 3

Client: **New Indy**
Location: **Catawba, SC**
Source:

Method **16**
Calibration **1**

Project Number: **15730.001.006**
Operator: **T. Simpkins**
Date: **17 Mar 2021**

Time	H_2S area	H_2S ppm	MeSH area	MeSH ppm	DMS area	DMS ppm	DMDS area	DMDS ppm	TRS ppm
				North Clarifier					
16:45	<2	<0.029	<2	<0.024	<2	<0.030	<2	<0.008	-
16:48	<2	<0.029	<2	<0.024	<2	<0.030	<2	<0.008	-
16:51	3	0.03	<2	<0.024	<2	<0.030	<2	<0.008	0.03
16:54	<2	<0.029	<2	<0.024	<2	<0.030	<2	<0.008	-
16:57	3	0.04	<2	<0.024	<2	<0.030	<2	<0.008	0.04
17:00	6	0.05	<2	<0.024	<2	<0.030	<2	<0.008	0.05
17:03	<2	<0.029	<2	<0.024	<2	<0.030	4	0.01	0.03
17:06	<2	<0.029	<2	<0.024	<2	<0.030	<2	<0.008	-
17:09	<2	<0.029	<2	<0.024	<2	<0.030	<2	<0.008	-
17:12	<2	<0.029	<2	<0.024	<2	<0.030	<2	<0.008	-
17:15	<2	<0.029	<2	<0.024	<2	<0.030	2	0.01	0.02
17:18	3	0.04	<2	<0.024	<2	<0.030	3	0.01	0.06
17:21	3	0.04	<2	<0.024	<2	<0.030	<2	<0.008	0.04
17:24	<2	<0.029	<2	<0.024	<2	<0.030	<2	<0.008	-
17:27	<2	<0.029	<2	<0.024	<2	<0.030	<2	<0.008	-
17:30	<2	<0.029	<2	<0.024	<2	<0.030	<2	<0.008	-
17:33	3	0.04	<2	<0.024	<2	<0.030	<2	<0.008	0.04
17:36	<2	<0.029	<2	<0.024	<2	<0.030	5	0.01	0.03
17:39	<2	<0.029	<2	<0.024	<2	<0.030	<2	<0.008	-
17:42	<2	<0.029	<2	<0.024	<2	<0.030	<2	<0.008	-
17:45	<2	<0.029	<2	<0.024	<2	<0.030	3	0.01	0.02
17:48	<2	<0.029	<2	<0.024	<2	<0.030	<2	<0.008	-
17:51	<2	<0.029	<2	<0.024	<2	<0.030	<2	<0.008	-
17:54	<2	<0.029	<2	<0.024	<2	<0.030	3	0.01	0.02
17:57	<2	<0.029	<2	<0.024	<2	<0.030	<2	<0.008	-
18:00	<2	<0.029	<2	<0.024	<2	<0.030	<2	<0.008	-
18:03	<2	<0.029	<2	<0.024	<2	<0.030	<2	<0.008	-
18:06	2	0.03	<2	<0.024	<2	<0.030	<2	<0.008	0.03
18:09	<2	<0.029	<2	<0.024	<2	<0.030	<2	<0.008	-
18:12	6	0.06	<2	<0.024	<2	<0.030	<2	<0.008	0.06
18:15	<2	<0.029	<2	<0.024	<2	<0.030	<2	<0.008	-
18:18	<2	<0.029	<2	<0.024	<2	<0.030	<2	<0.008	-
18:21	<2	<0.029	<2	<0.024	<2	<0.030	<2	<0.008	-
18:24	<2	<0.029	<2	<0.024	8	0.06	<2	<0.008	0.06
18:27	6	0.05	<2	<0.024	<2	<0.030	<2	<0.008	0.05
18:30	<2	<0.029	4	0.03	<2	<0.030	<2	<0.008	0.03
18:33	<2	<0.029	<2	<0.024	<2	<0.030	<2	<0.008	-
18:36	<2	<0.029	<2	<0.024	<2	<0.030	<2	<0.008	-
18:39	<2	<0.029	<2	<0.024	<2	<0.030	<2	<0.008	-

RUN DATA

Number 3

Client: **New Indy**
Location: **Catawba, SC**
Source:

Method **16**
Calibration **1**

Project Number: **15730.001.006**
Operator: **T. Simpkins**
Date: **17 Mar 2021**

Time	H_2S		MeSH		DMS		DMDS		TRS
	area	ppm	area	ppm	area	ppm	area	ppm	ppm
18:42	<2	<0.029	<2	<0.024	3	0.04	<2	<0.008	0.04
18:45	2	0.03	<2	<0.024	<2	<0.030	<2	<0.008	0.03
18:48	<2	<0.029	<2	<0.024	<2	<0.030	<2	<0.008	-
18:51	<2	<0.029	<2	<0.024	<2	<0.030	<2	<0.008	-
18:54	<2	<0.029	<2	<0.024	<2	<0.030	<2	<0.008	-
18:57	<2	<0.029	<2	<0.024	<2	<0.030	<2	<0.008	-
19:00	<2	<0.029	<2	<0.024	<2	<0.030	<2	<0.008	-
19:03	<2	<0.029	3	0.03	<2	<0.030	<2	<0.008	0.03
19:06	3	0.04	<2	<0.024	<2	<0.030	<2	<0.008	0.04
19:09	<2	<0.029	<2	<0.024	<2	<0.030	<2	<0.008	-
19:12	<2	<0.029	<2	<0.024	<2	<0.030	<2	<0.008	-
19:15	<2	<0.029	<2	<0.024	<2	<0.030	<2	<0.008	-
19:18	<2	<0.029	2	0.02	<2	<0.030	5	0.01	0.05
19:21	2	0.03	<2	<0.024	<2	<0.030	2	0.01	0.05
19:24	<2	<0.029	<2	<0.024	<2	<0.030	3	0.01	0.02
19:27	<2	<0.029	<2	<0.024	<2	<0.030	<2	<0.008	-
19:30	<2	<0.029	<2	<0.024	<2	<0.030	<2	<0.008	-
19:33	<2	<0.029	<2	<0.024	<2	<0.030	<2	<0.008	-
19:36	<2	<0.029	<2	<0.024	<2	<0.030	<2	<0.008	-
19:39	<2	<0.029	<2	<0.024	<2	<0.030	<2	<0.008	-
19:42	<2	<0.029	<2	<0.024	<2	<0.030	<2	<0.008	-
19:45	<2	<0.029	<2	<0.024	<2	<0.030	<2	<0.008	-
19:48	<2	<0.029	<2	<0.024	<2	<0.030	<2	<0.008	-
19:51	<2	<0.029	<2	<0.024	<2	<0.030	<2	<0.008	-
19:54	<2	<0.029	<2	<0.024	<2	<0.030	<2	<0.008	-
19:57	<2	<0.029	<2	<0.024	<2	<0.030	<2	<0.008	-
20:00	2	0.03	<2	<0.024	<2	<0.030	<2	<0.008	0.03
20:03	<2	<0.029	<2	<0.024	<2	<0.030	<2	<0.008	-
20:06	<2	<0.029	<2	<0.024	<2	<0.030	<2	<0.008	-
20:09	5	0.05	<2	<0.024	<2	<0.030	<2	<0.008	0.05
20:12	<2	<0.029	<2	<0.024	3	0.04	<2	<0.008	0.04
20:15	4	0.05	<2	<0.024	<2	<0.030	<2	<0.008	0.05
20:18	<2	<0.029	<2	<0.024	<2	<0.030	<2	<0.008	-
20:21	<2	<0.029	<2	<0.024	<2	<0.030	<2	<0.008	-
20:24	8	0.06	<2	<0.024	7	0.06	<2	<0.008	0.12
20:27	<2	<0.029	<2	<0.024	<2	<0.030	<2	<0.008	-
20:30	<2	<0.029	<2	<0.024	<2	<0.030	<2	<0.008	-
20:33	3	0.04	<2	<0.024	<2	<0.030	<2	<0.008	0.04
20:36	<2	<0.029	<2	<0.024	<2	<0.030	<2	<0.008	-
20:39	6	0.05	<2	<0.024	<2	<0.030	<2	<0.008	0.05

RUN DATA

Number 3

Client: **New Indy**
Location: **Catawba, SC**
Source:

Method **16**
Calibration **1**

Project Number: **15730.001.006**
Operator: **T. Simpkins**
Date: **17 Mar 2021**

Time	H_2S		MeSH		DMS		DMDS		TRS
	area	ppm	area	ppm	area	ppm	area	ppm	ppm
20:42	<2	<0.029	<2	<0.024	<2	<0.030	<2	<0.008	-
20:45	<2	<0.029	<2	<0.024	<2	<0.030	<2	<0.008	-
20:48	4	0.04	<2	<0.024	<2	<0.030	<2	<0.008	0.04
20:51	<2	<0.029	<2	<0.024	<2	<0.030	<2	<0.008	-
20:54	<2	<0.029	<2	<0.024	<2	<0.030	<2	<0.008	-
20:57	<2	<0.029	<2	<0.024	<2	<0.030	<2	<0.008	-
21:00	<2	<0.029	<2	<0.024	<2	<0.030	<2	<0.008	-
21:03	<2	<0.029	<2	<0.024	<2	<0.030	<2	<0.008	-
21:06	<2	<0.029	<2	<0.024	<2	<0.030	3	0.01	0.02
21:09	<2	<0.029	<2	<0.024	3	0.03	<2	<0.008	0.03
21:12	7	0.06	<2	<0.024	<2	<0.030	<2	<0.008	0.06
21:15	<2	<0.029	<2	<0.024	<2	<0.030	<2	<0.008	-
21:18	3	0.04	<2	<0.024	<2	<0.030	<2	<0.008	0.04
21:21	<2	<0.029	<2	<0.024	<2	<0.030	<2	<0.008	-
21:24	<2	<0.029	<2	<0.024	2	0.03	<2	<0.008	0.03
21:27	<2	<0.029	<2	<0.024	<2	<0.030	<2	<0.008	-
21:30	<2	<0.029	<2	<0.024	<2	<0.030	<2	<0.008	-
21:33	3	0.04	<2	<0.024	<2	<0.030	<2	<0.008	0.04
21:36	4	0.05	2	0.02	<2	<0.030	<2	<0.008	0.07
21:39	<2	<0.029	<2	<0.024	<2	<0.030	<2	<0.008	-
21:42	<2	<0.029	<2	<0.024	<2	<0.030	<2	<0.008	-
21:45	<2	<0.029	<2	<0.024	3	0.03	<2	<0.008	0.03
21:48	<2	<0.029	2	0.02	<2	<0.030	<2	<0.008	0.02
21:51	<2	<0.029	<2	<0.024	<2	<0.030	<2	<0.008	-
21:54	<2	<0.029	<2	<0.024	<2	<0.030	<2	<0.008	-
21:57	9	0.07	<2	<0.024	2	0.03	<2	<0.008	0.10
22:00	<2	<0.029	<2	<0.024	<2	<0.030	<2	<0.008	-
22:04	<2	<0.029	<2	<0.024	3	0.04	<2	<0.008	0.04
22:07	<2	<0.029	<2	<0.024	<2	<0.030	<2	<0.008	-
22:10	<2	<0.029	<2	<0.024	<2	<0.030	<2	<0.008	-
22:13	<2	<0.029	<2	<0.024	<2	<0.030	<2	<0.008	-
22:16	<2	<0.029	<2	<0.024	<2	<0.030	<2	<0.008	-
22:19	<2	<0.029	<2	<0.024	<2	<0.030	<2	<0.008	-
22:22	<2	<0.029	<2	<0.024	<2	<0.030	<2	<0.008	-
22:25	<2	<0.029	<2	<0.024	<2	<0.030	4	0.01	0.02
22:28	<2	<0.029	<2	<0.024	<2	<0.030	<2	<0.008	-
22:31	<2	<0.029	3	0.03	<2	<0.030	<2	<0.008	0.03
22:34	<2	<0.029	<2	<0.024	<2	<0.030	<2	<0.008	-
22:37	<2	<0.029	<2	<0.024	10	0.07	<2	<0.008	0.07
22:40	<2	<0.029	<2	<0.024	2	0.03	<2	<0.008	0.03

RUN DATA

Number 3

Client: **New Indy**
Location: **Catawba, SC**
Source:

Method **16**
Calibration **1**

Project Number: **15730.001.006**
Operator: **T. Simpkins**
Date: **17 Mar 2021**

Time	H_2S		MeSH		DMS		DMDS		TRS
	area	ppm	area	ppm	area	ppm	area	ppm	ppm
22:43	10	0.07	<2	<0.024	<2	<0.030	<2	<0.008	0.07
22:46	<2	<0.029	<2	<0.024	<2	<0.030	5	0.02	0.03
22:49	<2	<0.029	<2	<0.024	<2	<0.030	<2	<0.008	-
22:52	<2	<0.029	<2	<0.024	<2	<0.030	3	0.01	0.02
22:55	<2	<0.029	<2	<0.024	<2	<0.030	<2	<0.008	-
22:58	<2	<0.029	<2	<0.024	<2	<0.030	<2	<0.008	-
23:01	<2	<0.029	<2	<0.024	<2	<0.030	<2	<0.008	-
23:04	<2	<0.029	<2	<0.024	<2	<0.030	3	0.01	0.02
23:07	<2	<0.029	<2	<0.024	<2	<0.030	<2	<0.008	-
23:10	<2	<0.029	<2	<0.024	5	0.05	<2	<0.008	0.05
23:13	<2	<0.029	<2	<0.024	<2	<0.030	<2	<0.008	-
23:16	3	0.04	<2	<0.024	<2	<0.030	<2	<0.008	0.04
23:19	3	0.04	<2	<0.024	<2	<0.030	<2	<0.008	0.04
23:22	<2	<0.029	<2	<0.024	<2	<0.030	<2	<0.008	-
23:25	2	0.03	<2	<0.024	<2	<0.030	<2	<0.008	0.03
23:28	<2	<0.029	<2	<0.024	<2	<0.030	<2	<0.008	-
23:31	<2	<0.029	<2	<0.024	<2	<0.030	<2	<0.008	-
23:34	<2	<0.029	<2	<0.024	<2	<0.030	<2	<0.008	-
23:37	2	0.03	<2	<0.024	<2	<0.030	<2	<0.008	0.03
23:40	<2	<0.029	<2	<0.024	<2	<0.030	<2	<0.008	-
23:43	<2	<0.029	<2	<0.024	<2	<0.030	<2	<0.008	-
23:46	<2	<0.029	<2	<0.024	<2	<0.030	<2	<0.008	-
23:49	<2	<0.029	<2	<0.024	<2	<0.030	<2	<0.008	-
23:52	4	0.04	<2	<0.024	<2	<0.030	<2	<0.008	0.04
23:55	<2	<0.029	<2	<0.024	<2	<0.030	<2	<0.008	-
23:58	<2	<0.029	<2	<0.024	<2	<0.030	<2	<0.008	-
00:01	<2	<0.029	<2	<0.024	<2	<0.030	<2	<0.008	-
00:04	3	0.04	<2	<0.024	<2	<0.030	<2	<0.008	0.04
00:07	<2	<0.029	<2	<0.024	<2	<0.030	<2	<0.008	-
00:10	<2	<0.029	<2	<0.024	<2	<0.030	<2	<0.008	-
00:13	<2	<0.029	<2	<0.024	<2	<0.030	<2	<0.008	-
00:16	<2	<0.029	<2	<0.024	<2	<0.030	<2	<0.008	-
00:19	7	0.06	<2	<0.024	<2	<0.030	<2	<0.008	0.06
00:22	<2	<0.029	<2	<0.024	<2	<0.030	<2	<0.008	-
00:25	<2	<0.029	<2	<0.024	<2	<0.030	<2	<0.008	-
00:28	3	0.04	<2	<0.024	<2	<0.030	<2	<0.008	0.04
00:31	<2	<0.029	<2	<0.024	<2	<0.030	<2	<0.008	-
00:34	<2	<0.029	<2	<0.024	<2	<0.030	<2	<0.008	-
00:37	<2	<0.029	<2	<0.024	<2	<0.030	<2	<0.008	-
00:40	<2	<0.029	<2	<0.024	<2	<0.030	<2	<0.008	-

RUN DATA

Number 3

Client: **New Indy**
Location: **Catawba, SC**
Source:

Method **16**
Calibration **1**

Project Number: **15730.001.006**
Operator: **T. Simpkins**
Date: **17 Mar 2021**

Time	H_2S		MeSH		DMS		DMDS		TRS
	area	ppm	area	ppm	area	ppm	area	ppm	ppm
00:43	<2	<0.029	<2	<0.024	<2	<0.030	<2	<0.008	-
00:46	<2	<0.029	<2	<0.024	<2	<0.030	<2	<0.008	-
00:49	<2	<0.029	<2	<0.024	<2	<0.030	<2	<0.008	-
00:52	<2	<0.029	<2	<0.024	<2	<0.030	4	0.01	0.02
00:55	<2	<0.029	<2	<0.024	<2	<0.030	<2	<0.008	-
00:58	<2	<0.029	<2	<0.024	<2	<0.030	<2	<0.008	-
01:01	4	0.04	<2	<0.024	<2	<0.030	<2	<0.008	0.04
01:04	<2	<0.029	<2	<0.024	<2	<0.030	<2	<0.008	-
01:07	3	0.04	<2	<0.024	<2	<0.030	10	0.02	0.08
01:10	3	0.03	<2	<0.024	<2	<0.030	<2	<0.008	0.03
01:13	<2	<0.029	<2	<0.024	<2	<0.030	4	0.01	0.03
01:16	2	0.03	<2	<0.024	<2	<0.030	<2	<0.008	0.03
01:19	2	0.03	<2	<0.024	<2	<0.030	<2	<0.008	0.03
01:22	<2	<0.029	<2	<0.024	<2	<0.030	<2	<0.008	-
01:25	<2	<0.029	3	0.03	<2	<0.030	<2	<0.008	0.03
01:28	<2	<0.029	<2	<0.024	3	0.04	<2	<0.008	0.04
01:31	<2	<0.029	<2	<0.024	<2	<0.030	<2	<0.008	-
01:34	3	0.04	<2	<0.024	<2	<0.030	<2	<0.008	0.04
01:37	<2	<0.029	<2	<0.024	<2	<0.030	<2	<0.008	-
01:40	<2	<0.029	<2	<0.024	<2	<0.030	3	0.01	0.02
01:43	<2	<0.029	<2	<0.024	<2	<0.030	<2	<0.008	-
01:46	<2	<0.029	<2	<0.024	<2	<0.030	3	0.01	0.02
01:49	<2	<0.029	<2	<0.024	2	0.03	<2	<0.008	0.03
01:52	<2	<0.029	<2	<0.024	<2	<0.030	<2	<0.008	-
01:55	2	0.03	<2	<0.024	<2	<0.030	<2	<0.008	0.03
01:58	<2	<0.029	<2	<0.024	<2	<0.030	<2	<0.008	-
02:01	<2	<0.029	<2	<0.024	<2	<0.030	<2	<0.008	-
02:04	<2	<0.029	<2	<0.024	<2	<0.030	<2	<0.008	-
02:07	<2	<0.029	<2	<0.024	<2	<0.030	<2	<0.008	-
02:10	<2	<0.029	<2	<0.024	2	0.03	<2	<0.008	0.03
02:13	3	0.03	<2	<0.024	<2	<0.030	<2	<0.008	0.03
02:16	<2	<0.029	<2	<0.024	<2	<0.030	<2	<0.008	-
02:19	<2	<0.029	<2	<0.024	<2	<0.030	<2	<0.008	-
02:22	<2	<0.029	<2	<0.024	<2	<0.030	<2	<0.008	-
02:25	<2	<0.029	<2	<0.024	<2	<0.030	<2	<0.008	-
02:28	3	0.04	<2	<0.024	<2	<0.030	<2	<0.008	0.04
02:31	<2	<0.029	<2	<0.024	<2	<0.030	2	0.01	0.02
02:34	<2	<0.029	<2	<0.024	<2	<0.030	2	0.01	0.02
02:37	<2	<0.029	<2	<0.024	<2	<0.030	<2	<0.008	-
02:40	<2	<0.029	<2	<0.024	<2	<0.030	9	0.02	0.04

RUN DATA

Number 3

Client: **New Indy**
Location: **Catawba, SC**
Source:

Method **16**
Calibration **1**

Project Number: **15730.001.006**
Operator: **T. Simpkins**
Date: **17 Mar 2021**

Time	H_2S		MeSH		DMS		DMDS		TRS
	area	ppm	area	ppm	area	ppm	area	ppm	ppm
02:43	<2	<0.029	<2	<0.024	<2	<0.030	<2	<0.008	-
02:46	5	0.05	<2	<0.024	<2	<0.030	<2	<0.008	0.05
02:49	4	0.04	<2	<0.024	<2	<0.030	<2	<0.008	0.04
02:52	2	0.03	<2	<0.024	<2	<0.030	6	0.02	0.06
02:55	3	0.04	<2	<0.024	<2	<0.030	<2	<0.008	0.04
02:58	<2	<0.029	<2	<0.024	<2	<0.030	<2	<0.008	-
03:01	<2	<0.029	<2	<0.024	4	0.05	<2	<0.008	0.05
03:04	<2	<0.029	<2	<0.024	<2	<0.030	<2	<0.008	-
03:07	3	0.04	<2	<0.024	<2	<0.030	<2	<0.008	0.04
03:10	<2	<0.029	<2	<0.024	<2	<0.030	2	0.01	0.02
03:13	<2	<0.029	<2	<0.024	<2	<0.030	<2	<0.008	-
03:16	<2	<0.029	<2	<0.024	<2	<0.030	<2	<0.008	-
03:19	4	0.04	<2	<0.024	<2	<0.030	<2	<0.008	0.04
03:22	<2	<0.029	<2	<0.024	<2	<0.030	<2	<0.008	-
03:25	3	0.04	<2	<0.024	<2	<0.030	<2	<0.008	0.04
03:28	<2	<0.029	<2	<0.024	<2	<0.030	<2	<0.008	-
03:31	3	0.04	<2	<0.024	<2	<0.030	<2	<0.008	0.04
03:34	<2	<0.029	<2	<0.024	<2	<0.030	<2	<0.008	-
03:37	<2	<0.029	<2	<0.024	<2	<0.030	<2	<0.008	-
03:40	<2	<0.029	<2	<0.024	<2	<0.030	<2	<0.008	-
03:43	<2	<0.029	<2	<0.024	<2	<0.030	<2	<0.008	-
03:46	2	0.03	<2	<0.024	<2	<0.030	<2	<0.008	0.03
03:49	<2	<0.029	<2	<0.024	<2	<0.030	2	0.01	0.02
03:52	<2	<0.029	<2	<0.024	<2	<0.030	<2	<0.008	-
03:55	<2	<0.029	<2	<0.024	<2	<0.030	<2	<0.008	-
03:58	2	0.03	<2	<0.024	<2	<0.030	<2	<0.008	0.03
04:01	<2	<0.029	<2	<0.024	2	0.03	<2	<0.008	0.03
04:05	3	0.03	<2	<0.024	<2	<0.030	2	0.01	0.05
04:08	<2	<0.029	<2	<0.024	2	0.03	<2	<0.008	0.03
04:11	2	0.03	<2	<0.024	<2	<0.030	<2	<0.008	0.03
04:14	<2	<0.029	<2	<0.024	<2	<0.030	<2	<0.008	-
04:17	<2	<0.029	<2	<0.024	<2	<0.030	<2	<0.008	-
04:20	3	0.04	<2	<0.024	<2	<0.030	<2	<0.008	0.04
04:23	<2	<0.029	<2	<0.024	<2	<0.030	<2	<0.008	-
04:26	5	0.05	<2	<0.024	<2	<0.030	<2	<0.008	0.05
04:29	5	0.05	<2	<0.024	<2	<0.030	<2	<0.008	0.05
04:32	<2	<0.029	<2	<0.024	<2	<0.030	<2	<0.008	-
04:35	<2	<0.029	<2	<0.024	<2	<0.030	5	0.01	0.03
04:38	<2	<0.029	<2	<0.024	3	0.04	<2	<0.008	0.04
04:41	<2	<0.029	<2	<0.024	<2	<0.030	<2	<0.008	-

RUN DATA

Number 3

Client: **New Indy**
Location: **Catawba, SC**
Source:

Method **16**
Calibration **1**

Project Number: **15730.001.006**
Operator: **T. Simpkins**
Date: **17 Mar 2021**

Time	H_2S		MeSH		DMS		DMDS		TRS
	area	ppm	area	ppm	area	ppm	area	ppm	ppm
04:44	<2	<0.029	<2	<0.024	<2	<0.030	<2	<0.008	-
04:47	<2	<0.029	<2	<0.024	<2	<0.030	<2	<0.008	-
04:50	<2	<0.029	<2	<0.024	<2	<0.030	<2	<0.008	-
04:53	<2	<0.029	<2	<0.024	<2	<0.030	<2	<0.008	-
04:56	<2	<0.029	<2	<0.024	<2	<0.030	<2	<0.008	-
04:59	<2	<0.029	<2	<0.024	<2	<0.030	3	0.01	0.02
05:02	9	0.07	<2	<0.024	<2	<0.030	<2	<0.008	0.07
05:05	2	0.03	<2	<0.024	<2	<0.030	<2	<0.008	0.03
05:08	3	0.04	<2	<0.024	<2	<0.030	<2	<0.008	0.04
05:11	3	0.04	<2	<0.024	<2	<0.030	<2	<0.008	0.04
05:14	2	0.03	<2	<0.024	<2	<0.030	<2	<0.008	0.03
05:17	3	0.04	<2	<0.024	<2	<0.030	<2	<0.008	0.04
05:20	3	0.04	<2	<0.024	<2	<0.030	4	0.01	0.06
05:23	<2	<0.029	<2	<0.024	<2	<0.030	<2	<0.008	-
05:26	2	0.03	<2	<0.024	<2	<0.030	<2	<0.008	0.03
05:29	<2	<0.029	<2	<0.024	<2	<0.030	<2	<0.008	-
05:32	3	0.04	5	0.04	2	0.03	<2	<0.008	0.11
05:35	<2	<0.029	<2	<0.024	<2	<0.030	<2	<0.008	-
05:38	<2	<0.029	2	0.02	<2	<0.030	5	0.01	0.05
05:41	<2	<0.029	<2	<0.024	<2	<0.030	<2	<0.008	-
05:44	4	0.04	<2	<0.024	<2	<0.030	<2	<0.008	0.04
05:47	2	0.03	<2	<0.024	<2	<0.030	2	0.01	0.05
05:50	<2	<0.029	<2	<0.024	<2	<0.030	<2	<0.008	-
05:53	<2	<0.029	<2	<0.024	<2	<0.030	<2	<0.008	-
05:56	<2	<0.029	<2	<0.024	<2	<0.030	<2	<0.008	-
05:59	2	0.03	<2	<0.024	<2	<0.030	<2	<0.008	0.03
06:02	<2	<0.029	<2	<0.024	<2	<0.030	<2	<0.008	-
06:05	3	0.04	<2	<0.024	<2	<0.030	<2	<0.008	0.04
06:08	3	0.03	3	0.03	<2	<0.030	<2	<0.008	0.06
06:11	<2	<0.029	<2	<0.024	<2	<0.030	<2	<0.008	-
06:14	<2	<0.029	<2	<0.024	<2	<0.030	<2	<0.008	-
06:17	<2	<0.029	<2	<0.024	<2	<0.030	<2	<0.008	-
06:20	6	0.05	<2	<0.024	<2	<0.030	<2	<0.008	0.05
06:23	<2	<0.029	<2	<0.024	<2	<0.030	<2	<0.008	-
06:26	2	0.03	<2	<0.024	<2	<0.030	<2	<0.008	0.03
06:29	<2	<0.029	<2	<0.024	<2	<0.030	<2	<0.008	-
06:32	<2	<0.029	<2	<0.024	<2	<0.030	3	0.01	0.02
06:35	3	0.04	<2	<0.024	<2	<0.030	<2	<0.008	0.04
06:38	3	0.04	<2	<0.024	<2	<0.030	4	0.01	0.07
06:41	<2	<0.029	<2	<0.024	<2	<0.030	<2	<0.008	-

RUN DATA

Number 3

Client: **New Indy**
Location: **Catawba, SC**
Source:

Method **16**
Calibration **1**

Project Number: **15730.001.006**
Operator: **T. Simpkins**
Date: **17 Mar 2021**

Time	H_2S		MeSH		DMS		DMDS		TRS
	area	ppm	area	ppm	area	ppm	area	ppm	ppm
06:44	<2	<0.029	<2	<0.024	<2	<0.030	<2	<0.008	-
06:47	<2	<0.029	<2	<0.024	<2	<0.030	<2	<0.008	-
06:50	<2	<0.029	<2	<0.024	<2	<0.030	<2	<0.008	-
06:53	<2	<0.029	<2	<0.024	<2	<0.030	3	0.01	0.02
06:56	<2	<0.029	<2	<0.024	<2	<0.030	<2	<0.008	-
06:59	<2	<0.029	<2	<0.024	<2	<0.030	<2	<0.008	-
07:02	<2	<0.029	<2	<0.024	<2	<0.030	<2	<0.008	-
07:05	<2	<0.029	<2	<0.024	<2	<0.030	<2	<0.008	-
07:08	3	0.04	<2	<0.024	<2	<0.030	<2	<0.008	0.04
07:11	<2	<0.029	<2	<0.024	<2	<0.030	<2	<0.008	-
07:14	3	0.03	<2	<0.024	<2	<0.030	5	0.01	0.06
07:17	4	0.04	<2	<0.024	<2	<0.030	<2	<0.008	0.04
07:20	3	0.04	<2	<0.024	<2	<0.030	<2	<0.008	0.04
07:23	<2	<0.029	<2	<0.024	<2	<0.030	<2	<0.008	-
07:26	<2	<0.029	<2	<0.024	<2	<0.030	<2	<0.008	-
07:29	3	0.04	<2	<0.024	<2	<0.030	<2	<0.008	0.04
07:32	<2	<0.029	<2	<0.024	<2	<0.030	<2	<0.008	-
07:35	<2	<0.029	<2	<0.024	<2	<0.030	<2	<0.008	-
07:38	<2	<0.029	<2	<0.024	<2	<0.030	<2	<0.008	-
07:41	<2	<0.029	<2	<0.024	<2	<0.030	<2	<0.008	-
07:44	<2	<0.029	<2	<0.024	3	0.04	<2	<0.008	0.04
07:47	<2	<0.029	<2	<0.024	<2	<0.030	<2	<0.008	-
07:50	<2	<0.029	<2	<0.024	<2	<0.030	<2	<0.008	-
07:53	<2	<0.029	<2	<0.024	<2	<0.030	<2	<0.008	-
815 wind moving toward NE- trailer N of Clarifier									
07:56	<2	<0.029	<2	<0.024	<2	<0.030	<2	<0.008	-
Average		**<0.029**		**<0.024**		**<0.030**		**<0.008**	**-**

CALIBRATION DATA

Number 1

Client: **New Indy**
Location: **Catawba, SC**
Source:

Method **16**

Project Number: **15730.001.006**
Operator: **T. Simpkins**
Date: **17 Mar 2021**

Ambient Temperature: 72°C **Barometric Pressure:** 30.20 in. Hg

Analyte	**H_2S**	**MeSH**	**DMS**	**DMDS**
Perm. Device ID	T-53950	33-56671	89-56661	89-56665
Perm. Rate, nL/min	422	455	306	217
Ret. Time, sec	19.0	32.5	70.0	125.0

1 Flow = **51.7** mL/Min	**8.17** ppm	**8.80** ppm	**5.91** ppm	**4.20** ppm
Time: 08:28		**Peak Areas, mv-sec**		
	32885	40065	21703	62655
	32377	40847	22337	64423
	33445	40700	22722	65189
Average Area	**32902**	**40537**	**22254**	**64089**
2 Flow = **110** mL/Min	**3.84** ppm	**4.14** ppm	**2.78** ppm	**1.98** ppm
Time: 08:45		**Peak Areas, mv-sec**		
	10234	12405	6217	19301
	9896	12664	6278	19254
	10029	12369	6218	19511
Average Area	**10053**	**12479**	**6238**	**19355**
3 Flow = **258** mL/Min	**1.64** ppm	**1.76** ppm	**1.18** ppm	**0.84** ppm
Time: 09:10		**Peak Areas, mv-sec**		
	2028	2745	1321	4433
	2061	2708	1308	4367
	2026	2706	1300	4291
Average Area	**2038**	**2720**	**1310**	**4364**

CALIBRATION SUMMARY

Number 1

Client: **New Indy**
Location: **Catawba, SC**
Source:

Method **16**

Project Number: **15730.001.006**
Operator: **T. Simpkins**
Date: **17 Mar 2021**

H_2S	1	2	3		
Time	08:28	08:45	09:10		
Concentration, ppm	8.17	3.84	1.64		
Area, mv-sec	32902	10053	2038		
Calc. Conc., ppm	7.97	4.02	1.60		
% Error	-2.4	4.7	-2.1		
Calibration Curve	Slope	Intercept	Corr. Coeff.	Min. Area	Det. Lim.
	1.7333	2.9545	0.9988	2	0.029

MeSH	1	2	3		
Time	08:28	08:45	09:10		
Concentration, ppm	8.80	4.14	1.76		
Area, mv-sec	40537	12479	2720		
Calc. Conc., ppm	8.64	4.29	1.74		
% Error	-1.9	3.6	-1.6		
Calibration Curve	Slope	Intercept	Corr. Coeff.	Min. Area	Det. Lim.
	1.6829	3.0318	0.9993	2	0.024

DMS	1	2	3		
Time	08:28	08:45	09:10		
Concentration, ppm	5.91	2.78	1.18		
Area, mv-sec	22254	6238	1310		
Calc. Conc., ppm	5.85	2.84	1.17		
% Error	-1.1	2.2	-1.0		
Calibration Curve	Slope	Intercept	Corr. Coeff.	Min. Area	Det. Lim.
	1.7636	2.9950	0.9997	2	0.030

DMDS	1	2	3		
Time	08:28	08:45	09:10		
Concentration, ppm	4.20	1.98	0.84		
Area, mv-sec	64089	19355	4364		
Calc. Conc., ppm	4.14	2.03	0.83		
% Error	-1.3	2.5	-1.2		
Calibration Curve	Slope	Intercept	Corr. Coeff.	Min. Area	Det. Lim.
	1.6731	3.7739	0.9996	2	0.008

CALIBRATION DATA

Number 2

Client: **New Indy**
Location: **Catawba, SC**
Source:

Method **16**

Project Number: **15730.001.006**
Operator: **T. Simpkins**
Date: **18 Mar 2021**

Ambient Temperature: 72°C **Barometric Pressure:** 30.20 in. Hg

Analyte	**H_2S**	**MeSH**	**DMS**	**DMDS**
Perm. Device ID	T-53950	33-56671	89-56661	89-56665
Perm. Rate, nL/min	422	455	306	217
Ret. Time, sec	19.0	32.5	70.0	125.0

1 Flow = **55.0** mL/Min	**7.68** ppm	**8.28** ppm	**5.56** ppm	**3.95** ppm
Time: 08:30		**Peak Areas, mv-sec**		
	37217	48066	25482	71756
	38155	47820	25458	71884
	37886	48063	25691	71544
Average Area	**37753**	**47983**	**25544**	**71728**
2 Flow = **108** mL/Min	**3.91** ppm	**4.21** ppm	**2.83** ppm	**2.01** ppm
Time: 08:53		**Peak Areas, mv-sec**		
	11220	15593	6415	19990
	11626	15400	6404	19931
	11251	15235	6408	19816
Average Area	**11366**	**15409**	**6409**	**19912**
3 Flow = **234** mL/Min	**1.80** ppm	**1.95** ppm	**1.31** ppm	**0.93** ppm
Time: 09:08		**Peak Areas, mv-sec**		
	2385	3436	1360	4560
	2307	3358	1346	4470
	2361	3302	1307	4384
Average Area	**2351**	**3365**	**1338**	**4471**

CALIBRATION SUMMARY

Number 2

Client: **New Indy**
Location: **Catawba, SC**
Source:

Method **16**

Project Number: **15730.001.006**
Operator: **T. Simpkins**
Date: **18 Mar 2021**

H_2S	1	2	3		
Time	08:30	08:53	09:08		
Concentration, ppm	7.68	3.91	1.80		
Area, mv-sec	37753	11366	2351		
Calc. Conc., ppm	7.55	4.04	1.78		
% Error	-1.7	3.3	-1.5		
Calibration Curve	Slope	Intercept	Corr. Coeff.	Min. Area	Det. Lim.
	1.9202	2.8914	0.9993	2	0.045

MeSH	1	2	3		
Time	08:30	08:53	09:08		
Concentration, ppm	8.28	4.21	1.95		
Area, mv-sec	47983	15409	3365		
Calc. Conc., ppm	8.11	4.37	1.91		
% Error	-2.0	3.8	-1.7		
Calibration Curve	Slope	Intercept	Corr. Coeff.	Min. Area	Det. Lim.
	1.8384	3.0096	0.9990	2	0.034

DMS	1	2	3		
Time	08:30	08:53	09:08		
Concentration, ppm	5.56	2.83	1.31		
Area, mv-sec	25544	6409	1338		
Calc. Conc., ppm	5.57	2.82	1.31		
% Error	0.1	-0.3	0.1		
Calibration Curve	Slope	Intercept	Corr. Coeff.	Min. Area	Det. Lim.
	2.0366	2.8888	>0.9999	2	0.054

DMDS	1	2	3		
Time	08:30	08:53	09:08		
Concentration, ppm	3.95	2.01	0.93		
Area, mv-sec	71728	19912	4471		
Calc. Conc., ppm	3.94	2.02	0.93		
% Error	-0.2	0.4	-0.2		
Calibration Curve	Slope	Intercept	Corr. Coeff.	Min. Area	Det. Lim.
	1.9169	3.7145	>0.9999	2	0.017

ANALYTES AND STANDARDS

Client: **New Indy**
Location: **Catawba, SC**
Source:

Method **16**

Project Number: **15730.001.006**
Operator: **T. Simpkins**
Date: **17 Mar 2021**

Analyte	H_2S	MeSH	DMS	DMDS
Molecular Weight	34.08	48.11	62.14	94.20
Retention Time, sec	19.0	32.5	70.0	125.0
Peak Detection Window, sec	3.0	5.0	10.0	10.0
Minimum Peak Area, mv-sec	2	2	2	2
Minimum Peak Height, mv	1	1	1	1
Beginning Peak Width, sec	1.0	1.0	2.0	3.0
Ending Peak Width, sec	2.0	3.0	4.0	5.0
Permeation Device ID	T-53950	33-56671	89-56661	89-56665
Permeation Rate, ng/min	600	913	792	852
Permeation Rate, nL/min*	422	455	306	217

Barometric Pressure: 30.20 in. Hg **Ambient Temperature:** 72 °F
No Oxygen Correction

*Permeation rates are gravimetrically determined by the manufacturer with results by weight in ng/min. Permeation rates by volume, in nL/min, are calculated from the permeation rates by weight as follows:

$$PR_{nl} = PR_{ng} \times (V_{mol} / W_{mol}) \times [(460° + T_a) / T_s] \times (P_s / P_b)$$

Where:

PR_{nl} = Permeation Rate by volume, nL/min
PR_{ng} = Permeation Rate by weight, ng/min
V_{mol} = Molar Volume of any gas @32 °F & 29.92 mm Hg = 22.4 L/mole
W_{mol} = Molecular Weight of compound
T_a = Ambient Temperature, °F
T_s = Standard Temperature = 492°R (32 °F)
P_s = Standard Pressure = 29.92 in Hg
P_b = Barometric Pressure, in Hg

For example, H_2S:

$$PR_{nl} = 600 \times (22.4 / 34.08) \times [(460 + 72) / 492] \times (29.92 / 30.20)$$
$$= 422 \text{ nL/min}$$

To calclate concentrations:

$$C = PR_{nl} / F_d$$

Where:

C = Concentration, ppmv
PR_{nl} = Permeation Rate by volume, nL/min
F_d = Flow rate of diluent, mL/min

INSTRUMENT INFORMATION

Client: **New Indy**
Location: **Catawba, SC**
Source:

Method **16**

Project Number: **15730.001.006**
Operator: **T. Simpkins**
Date: **17 Mar 2021**

File: C:\Data\NIC\Trs Data 17 March 2021 A.trs
Program Version: 2.0, built 15 May 2017 **File Version:** 2.0
Computer: DESKTOP-A1IJDGT **Trailer:** 88

Analog Input Device: Keithley KUSB-3108 **GC Channel:** 16

Sampling Rate: 0.050 sec. **Data Interval:** 0.5 sec.

Gas Chromatograph: Shimadzu GC8A **Serial No.** GC 1
Detector Range: 10

Gases

	Press. psi	Flow mL/min
H_2	30	50
Air	30	60
Carrier	50	30

Temperatures, °C

Column: 100
Detector: 120

Columns

Primary: Carbopack
Secondary: N/A
Sample Loop: 4"

Injection Cycle

Total Length: 180 sec **Sampling Time:** 170 sec **Load/Backflush Time:** 80 sec

Default Integration Parameters

Signal Threshold 0.67 mv **Peak detection window** ±10 sec
Minimum peak area 2 mv-sec **Minimum peak height** 1 mv above baseline

Dynacalibrator

Chamber Temperature 50.0°C
Ambient Temperature 72.0°F
Barometric Pressure 30.20 in. Hg

ATTACHMENT B

18 MARCH 2021

RUN SUMMARY

Number 1

Client: **New Indy**
Location: **Catawba, SC**
Source:

Method **16**
Calibration **1**

Project Number: **15730.001.006**
Operator: **T. Simpkins**
Date: **18 Mar 2021**

Start Time 10:21 **End Time** 14:28

Average Measured TRS Conc. 0.03 **ppm**
Recovery Missing

RUN DATA

Number 1

Client: **New Indy**
Location: **Catawba, SC**
Source:

Method **16**
Calibration **1**

Project Number: **15730.001.006**
Operator: **T. Simpkins**
Date: **18 Mar 2021**

Time	H_2S area	H_2S ppm	MeSH area	MeSH ppm	DMS area	DMS ppm	DMDS area	DMDS ppm	TRS ppm
trailer south of old guard shack- by blue dumpsters wind from south to north									
10:21	4	0.06	<2	<0.030	<2	<0.049	<2	<0.015	0.06
10:24	<2	<0.041	<2	<0.030	<2	<0.049	5	0.02	0.05
10:27	<2	<0.041	<2	<0.030	<2	<0.049	<2	<0.015	-
10:30	3	0.05	<2	<0.030	<2	<0.049	2	0.02	0.08
10:33	<2	<0.041	5	0.05	<2	<0.049	<2	<0.015	0.05
10:36	<2	<0.041	<2	<0.030	<2	<0.049	<2	<0.015	-
10:39	<2	<0.041	<2	<0.030	<2	<0.049	<2	<0.015	-
10:42	2	0.04	<2	<0.030	<2	<0.049	<2	<0.015	0.04
10:45	2	0.04	2	0.03	<2	<0.049	<2	<0.015	0.08
10:48	<2	<0.041	<2	<0.030	<2	<0.049	4	0.02	0.04
10:51	5	0.07	<2	<0.030	<2	<0.049	<2	<0.015	0.07
10:54	<2	<0.041	<2	<0.030	<2	<0.049	2	0.02	0.03
10:57	<2	<0.041	2	0.03	<2	<0.049	<2	<0.015	0.03
11:00	12	0.11	<2	<0.030	<2	<0.049	<2	<0.015	0.11
11:03	<2	<0.041	<2	<0.030	<2	<0.049	<2	<0.015	-
11:06	<2	<0.041	<2	<0.030	<2	<0.049	<2	<0.015	-
11:09	<2	<0.041	<2	<0.030	<2	<0.049	<2	<0.015	-
11:12	<2	<0.041	<2	<0.030	<2	<0.049	<2	<0.015	-
11:15	4	0.06	<2	<0.030	<2	<0.049	<2	<0.015	0.06
11:18	2	0.04	<2	<0.030	<2	<0.049	<2	<0.015	0.04
11:21	<2	<0.041	<2	<0.030	<2	<0.049	<2	<0.015	-
11:24	<2	<0.041	<2	<0.030	3	0.06	<2	<0.015	0.06
11:27	2	0.04	5	0.05	<2	<0.049	5	0.02	0.14
11:30	<2	<0.041	<2	<0.030	<2	<0.049	<2	<0.015	-
11:33	<2	<0.041	<2	<0.030	<2	<0.049	2	0.02	0.03
11:36	<2	<0.041	<2	<0.030	<2	<0.049	<2	<0.015	-
11:39	<2	<0.041	<2	<0.030	3	0.06	<2	<0.015	0.06
11:42	2	0.04	<2	<0.030	<2	<0.049	<2	<0.015	0.04
11:45	7	0.08	<2	<0.030	<2	<0.049	<2	<0.015	0.08
11:48	<2	<0.041	<2	<0.030	<2	<0.049	<2	<0.015	-
11:51	<2	<0.041	<2	<0.030	<2	<0.049	<2	<0.015	-
11:54	<2	<0.041	<2	<0.030	<2	<0.049	<2	<0.015	-
11:57	<2	<0.041	<2	<0.030	<2	<0.049	<2	<0.015	-
12:00	2	0.04	<2	<0.030	<2	<0.049	<2	<0.015	0.04
12:03	<2	<0.041	3	0.04	<2	<0.049	2	0.02	0.07
12:06	<2	<0.041	3	0.04	<2	<0.049	<2	<0.015	0.04
12:09	3	0.05	<2	<0.030	<2	<0.049	<2	<0.015	0.05
12:12	<2	<0.041	<2	<0.030	<2	<0.049	<2	<0.015	-

RUN DATA

Number 1

Client: **New Indy**
Location: **Catawba, SC**
Source:

Method **16**
Calibration **1**

Project Number: **15730.001.006**
Operator: **T. Simpkins**
Date: **18 Mar 2021**

Time	H_2S		MeSH		DMS		DMDS		TRS
	area	ppm	area	ppm	area	ppm	area	ppm	ppm
12:15	<2	<0.041	<2	<0.030	<2	<0.049	<2	<0.015	-
12:18	<2	<0.041	<2	<0.030	<2	<0.049	<2	<0.015	-
12:21	<2	<0.041	<2	<0.030	<2	<0.049	<2	<0.015	-
12:24	<2	<0.041	<2	<0.030	<2	<0.049	<2	<0.015	-
12:27	<2	<0.041	<2	<0.030	2	0.05	2	0.02	0.08
12:30	<2	<0.041	<2	<0.030	<2	<0.049	<2	<0.015	-
12:33	3	0.05	<2	<0.030	<2	<0.049	<2	<0.015	0.05
12:37	<2	<0.041	<2	<0.030	<2	<0.049	3	0.02	0.04
12:40	<2	<0.041	<2	<0.030	<2	<0.049	<2	<0.015	-
12:43	<2	<0.041	<2	<0.030	<2	<0.049	<2	<0.015	-
12:46	<2	<0.041	<2	<0.030	<2	<0.049	<2	<0.015	-
12:49	<2	<0.041	<2	<0.030	<2	<0.049	<2	<0.015	-
12:52	<2	<0.041	<2	<0.030	5	0.08	<2	<0.015	0.08
12:55	<2	<0.041	<2	<0.030	<2	<0.049	<2	<0.015	-
moving trailer									
12:58	<2	<0.041	3	0.03	<2	<0.049	<2	<0.015	0.03
13:01	3	0.05	<2	<0.030	<2	<0.049	<2	<0.015	0.05
13:04	<2	<0.041	<2	<0.030	<2	<0.049	<2	<0.015	-
13:07	3	0.05	<2	<0.030	<2	<0.049	<2	<0.015	0.05
13:10	<2	<0.041	<2	<0.030	<2	<0.049	<2	<0.015	-
13:13	<2	<0.041	<2	<0.030	<2	<0.049	<2	<0.015	-
13:16	<2	<0.041	<2	<0.030	<2	<0.049	<2	<0.015	-
13:19	<2	<0.041	<2	<0.030	<2	<0.049	<2	<0.015	-
lower contractor parking									
13:22	<2	<0.041	<2	<0.030	25	0.17	<2	<0.015	0.17
13:25	<2	<0.041	5	0.05	<2	<0.049	<2	<0.015	0.05
13:28	<2	<0.041	<2	<0.030	<2	<0.049	<2	<0.015	-
upper contractor parking lot									
13:31	<2	<0.041	<2	<0.030	<2	<0.049	<2	<0.015	-
13:34	<2	<0.041	<2	<0.030	<2	<0.049	<2	<0.015	-
13:37	4	0.06	<2	<0.030	<2	<0.049	<2	<0.015	0.06
13:40	<2	<0.041	4	0.04	<2	<0.049	<2	<0.015	0.04
13:43	<2	<0.041	<2	<0.030	<2	<0.049	<2	<0.015	-
13:46	2	0.04	<2	<0.030	<2	<0.049	<2	<0.015	0.04
13:49	<2	<0.041	<2	<0.030	<2	<0.049	<2	<0.015	-
13:52	<2	<0.041	<2	<0.030	<2	<0.049	<2	<0.015	-
13:55	<2	<0.041	<2	<0.030	<2	<0.049	<2	<0.015	-
13:58	<2	<0.041	<2	<0.030	<2	<0.049	<2	<0.015	-
14:01	3	0.05	<2	<0.030	<2	<0.049	<2	<0.015	0.05
14:04	<2	<0.041	<2	<0.030	<2	<0.049	<2	<0.015	-
14:25	<2	<0.041	[illegible]	[illegible]	<2	[illegible]	[illegible]	[illegible]	[illegible]

RUN DATA

Number 1

Client: **New Indy**
Location: **Catawba, SC**
Source:

Method **16**
Calibration **1**

Project Number: **15730.001.006**
Operator: **T. Simpkins**
Date: **18 Mar 2021**

Time	H_2S		MeSH		DMS		DMDS		TRS
	area	ppm	area	ppm	area	ppm	area	ppm	ppm
14:07	4	0.06	<2	<0.030	<2	<0.049	<2	<0.015	0.06
14:10	<2	<0.041	4	0.04	<2	<0.049	2	0.02	0.08
14:13	<2	<0.041	2	0.03	<2	<0.049	<2	<0.015	0.03
14:16	<2	<0.041	<2	<0.030	<2	<0.049	<2	<0.015	-
14:19	<2	<0.041	<2	<0.030	<2	<0.049	<2	<0.015	-
14:22	<2	<0.041	<2	<0.030	<2	<0.049	<2	<0.015	-
14:25	<2	<0.041	<2	<0.030	<2	<0.049	<2	<0.015	-
Average		**<0.041**		**<0.030**		**<0.049**		**<0.015**	**-**

CALIBRATION DATA

Number 1

Client: **New Indy**
Location: **Catawba, SC**
Source:

Method **16**

Project Number: **15730.001.006**
Operator: **T. Simpkins**
Date: **18 Mar 2021**

Ambient Temperature: 72°C **Barometric Pressure:** 30.20 in. Hg

Analyte	**H_2S**	**MeSH**	**DMS**	**DMDS**
Perm. Device ID	T-53950	33-56671	89-56661	89-56665
Perm. Rate, nL/min	422	455	306	217
Ret. Time, sec	19.0	32.5	70.0	125.0

1 Flow = **53.0** mL/Min	**7.97** ppm	**8.59** ppm	**5.77** ppm	**4.10** ppm
Time: 08:30		**Peak Areas, mv-sec**		
	37217	48066	25482	71756
	38155	47820	25458	71884
	37886	48063	25691	71544
Average Area	**37753**	**47983**	**25544**	**71728**
2 Flow = **106** mL/Min	**3.98** ppm	**4.29** ppm	**2.88** ppm	**2.05** ppm
Time: 08:53		**Peak Areas, mv-sec**		
	11220	15593	6415	19990
	11626	15400	6404	19931
	11251	15235	6408	19816
Average Area	**11366**	**15409**	**6409**	**19912**
3 Flow = **234** mL/Min	**1.80** ppm	**1.95** ppm	**1.31** ppm	**0.93** ppm
Time: 09:08		**Peak Areas, mv-sec**		
	2385	3436	1360	4560
	2307	3358	1346	4470
	2361	3302	1307	4384
Average Area	**2351**	**3365**	**1338**	**4471**

CALIBRATION SUMMARY

Number 1

Client: **New Indy**
Location: **Catawba, SC**
Source:

Method **16**

Project Number: **15730.001.006**
Operator: **T. Simpkins**
Date: **18 Mar 2021**

H_2S	1	2	3		
Time	08:30	08:53	09:08		
Concentration, ppm	7.97	3.98	1.80		
Area, mv-sec	37753	11366	2351		
Calc. Conc., ppm	7.83	4.12	1.78		
% Error	-1.8	3.4	-1.6		
Calibration Curve	Slope	Intercept	Corr. Coeff.	Min. Area	Det. Lim.
	1.8723	2.9040	0.9992	2	0.041

MeSH	1	2	3		
Time	08:30	08:53	09:08		
Concentration, ppm	8.59	4.29	1.95		
Area, mv-sec	47983	15409	3365		
Calc. Conc., ppm	8.41	4.46	1.91		
% Error	-2.0	4.0	-1.8		
Calibration Curve	Slope	Intercept	Corr. Coeff.	Min. Area	Det. Lim.
	1.7925	3.0232	0.9990	2	0.030

DMS	1	2	3		
Time	08:30	08:53	09:08		
Concentration, ppm	5.77	2.88	1.31		
Area, mv-sec	25544	6409	1338		
Calc. Conc., ppm	5.77	2.88	1.31		
% Error	0.1	-0.2	0.1		
Calibration Curve	Slope	Intercept	Corr. Coeff.	Min. Area	Det. Lim.
	1.9859	2.8950	>0.9999	2	0.049

DMDS	1	2	3		
Time	08:30	08:53	09:08		
Concentration, ppm	4.10	2.05	0.93		
Area, mv-sec	71728	19912	4471		
Calc. Conc., ppm	4.09	2.06	0.93		
% Error	-0.3	0.5	-0.2		
Calibration Curve	Slope	Intercept	Corr. Coeff.	Min. Area	Det. Lim.
	1.8692	3.7132	>0.9999	2	0.015

ANALYTES AND STANDARDS

Client: **New Indy**
Location: **Catawba, SC**
Source:

Method **16**

Project Number: **15730.001.006**
Operator: **T. Simpkins**
Date: **18 Mar 2021**

Analyte	H_2S	MeSH	DMS	DMDS
Molecular Weight	34.08	48.11	62.14	94.20
Retention Time, sec	19.0	32.5	70.0	125.0
Peak Detection Window, sec	3.0	5.0	10.0	10.0
Minimum Peak Area, mv-sec	2	2	2	2
Minimum Peak Height, mv	1	1	1	1
Beginning Peak Width, sec	1.0	1.0	2.0	3.0
Ending Peak Width, sec	2.0	3.0	4.0	5.0
Permeation Device ID	T-53950	33-56671	89-56661	89-56665
Permeation Rate, ng/min	600	913	792	852
Permeation Rate, nL/min*	422	455	306	217

Barometric Pressure: 30.20 in. Hg **Ambient Temperature:** 72 °F
No Oxygen Correction

*Permeation rates are gravimetrically determined by the manufacturer with results by weight in ng/min. Permeation rates by volume, in nL/min, are calculated from the permeation rates by weight as follows:

$$PR_{nl} = PR_{ng} \times (V_{mol} / W_{mol}) \times [(460° + T_a) / T_s] \times (P_s / P_b)$$

Where:

PR_{nl} = Permeation Rate by volume, nL/min
PR_{ng} = Permeation Rate by weight, ng/min
V_{mol} = Molar Volume of any gas @32 °F & 29.92 mm Hg = 22.4 L/mole
W_{mol} = Molecular Weight of compound
T_a = Ambient Temperature, °F
T_s = Standard Temperature = 492°R (32 °F)
P_s = Standard Pressure = 29.92 in Hg
P_b = Barometric Pressure, in Hg

For example, H_2S:

$$PR_{nl} = 600 \times (22.4 / 34.08) \times [(460 + 72) / 492] \times (29.92 / 30.20)$$
$$= 422 \text{ nL/min}$$

To calclate concentrations:

$$C = PR_{nl} / F_d$$

Where:

C = Concentration, ppmv
PR_{nl} = Permeation Rate by volume, nL/min
F_d = Flow rate of diluent, mL/min

INSTRUMENT INFORMATION

Client: **New Indy**
Location: **Catawba, SC**
Source:

Method **16**

Project Number: **15730.001.006**
Operator: **T. Simpkins**
Date: **18 Mar 2021**

File: C:\Data\NIC\Trs Data 18 March 2021 A.trs
Program Version: 2.0, built 15 May 2017 **File Version:** 2.0
Computer: DESKTOP-A1IJDGT **Trailer:** 88

Analog Input Device: Keithley KUSB-3108 **GC Channel:** 16

Sampling Rate: 0.050 sec. **Data Interval:** 0.5 sec.

Gas Chromatograph: Shimadzu GC8A **Serial No.** GC 1
Detector Range: 10

Gases

	Press. psi	Flow mL/min
H_2	30	50
Air	30	60
Carrier	50	30

Temperatures, °C

Column: 100
Detector: 120

Columns

Primary: Carbopack
Secondary: N/A
Sample Loop: 4"

Injection Cycle

Total Length: 180 sec **Sampling Time:** 170 sec **Load/Backflush Time:** 80 sec

Default Integration Parameters

Signal Threshold 0.67 mv **Peak detection window** ±10 sec
Minimum peak area 2 mv-sec **Minimum peak height** 1 mv above baseline

Dynacalibrator

Chamber Temperature 50.0°C
Ambient Temperature 72.0°F
Barometric Pressure 30.20 in. Hg

ATTACHMENT B

23-24 MARCH 2021

RUN SUMMARY

Number 1

Client:	**New Indy**		Project Number: **15730.001.006**
Location:	**Catawba, SC**	Method **16**	Operator: **T. Simpkins**
Source:		Calibration **1**	Date: **23 Mar 2021**

Start Time 09:06 **End Time** 08:10

Average Measured TRS Conc. 0.07 **ppm**
Recovery Missing

RUN DATA

Number 1

Client: **New Indy**
Location: **Catawba, SC**
Source:

Method **16**
Calibration **1**

Project Number: **15730.001.006**
Operator: **T. Simpkins**
Date: **23 Mar 2021**

Time	H_2S		MeSH		DMS		DMDS		TRS
	area	ppm	area	ppm	area	ppm	area	ppm	ppm
09:06	<2	<0.053	<2	<0.053	<2	<0.053	<2	<0.019	-
East of RB Building in ally									
09:06	3	0.07	<2	<0.053	<2	<0.053	<2	<0.019	0.07
09:09	4	0.07	<2	<0.053	<2	<0.053	<2	<0.019	0.07
09:12	3	0.06	<2	<0.053	<2	<0.053	<2	<0.019	0.06
09:15	2	0.06	<2	<0.053	<2	<0.053	<2	<0.019	0.06
09:18	3	0.07	<2	<0.053	<2	<0.053	<2	<0.019	0.07
09:21	<2	<0.053	<2	<0.053	<2	<0.053	<2	<0.019	-
09:24	3	0.06	<2	<0.053	<2	<0.053	<2	<0.019	0.06
09:27	2	0.06	<2	<0.053	<2	<0.053	<2	<0.019	0.06
west of CB's									
west of cb's									
09:30	3	0.06	<2	<0.053	<2	<0.053	<2	<0.019	0.06
09:33	3	0.06	<2	<0.053	<2	<0.053	<2	<0.019	0.06
09:36	3	0.06	<2	<0.053	<2	<0.053	3	0.02	0.10
09:39	2	0.06	<2	<0.053	<2	<0.053	2	0.02	0.10
09:42	3	0.06	<2	<0.053	<2	<0.053	2	0.02	0.10
09:46	3	0.06	<2	<0.053	<2	<0.053	<2	<0.019	0.06
09:49	<2	<0.053	<2	<0.053	2	0.06	<2	<0.019	0.06
09:52	2	0.06	<2	<0.053	<2	<0.053	<2	<0.019	0.06
09:55	2	0.06	<2	<0.053	<2	<0.053	2	0.02	0.10
09:58	2	0.06	<2	<0.053	<2	<0.053	3	0.02	0.10
10:01	<2	<0.053	<2	<0.053	<2	<0.053	<2	<0.019	-
10:04	3	0.06	<2	<0.053	<2	<0.053	<2	<0.019	0.06
10:07	6	0.09	<2	<0.053	<2	<0.053	<2	<0.019	0.09
sdtv bag sample taken from 950-1000									
10:10	<2	<0.053	3	0.07	<2	<0.053	6	0.03	0.14
10:13	<2	<0.053	6	0.10	<2	<0.053	9	0.04	0.18
10:16	<2	<0.053	4	0.07	<2	<0.053	7	0.04	0.14
west side cb's- o citrate									
10:19	2	0.06	<2	<0.053	<2	<0.053	<2	<0.019	0.06
10:22	<2	<0.053	<2	<0.053	<2	<0.053	<2	<0.019	-
10:25	2	0.05	<2	<0.053	<2	<0.053	3	0.02	0.10
10:28	<2	<0.053	<2	<0.053	<2	<0.053	<2	<0.019	-
10:31	<2	<0.053	<2	<0.053	<2	<0.053	<2	<0.019	-
10:34	7	0.10	<2	<0.053	<2	<0.053	<2	<0.019	0.10
10:37	2	0.05	<2	<0.053	<2	<0.053	3	0.02	0.10
10:40	<2	<0.053	<2	<0.053	<2	<0.053	<2	<0.019	-
10:43	5	0.09	<2	<0.053	<2	<0.053	<2	<0.019	0.09
10:46	13	0.14	<2	<0.053	<2	<0.053	<2	<0.019	0.14

RUN DATA

Number 1

Client: **New Indy**
Location: **Catawba, SC**
Source:

Method **16**
Calibration **1**

Project Number: **15730.001.006**
Operator: **T. Simpkins**
Date: **23 Mar 2021**

Time	H_2S		MeSH		DMS		DMDS		TRS
	area	ppm	area	ppm	area	ppm	area	ppm	ppm
10:49	<2	<0.053	<2	<0.053	<2	<0.053	4	0.03	0.05
10:52	<2	<0.053	<2	<0.053	<2	<0.053	<2	<0.019	-
10:55	<2	<0.053	<2	<0.053	<2	<0.053	<2	<0.019	-
10:58	<2	<0.053	<2	<0.053	<2	<0.053	<2	<0.019	-
11:01	2	0.05	<2	<0.053	25	0.18	<2	<0.019	0.24
11:04	2	0.05	<2	<0.053	<2	<0.053	<2	<0.019	0.05
11:07	<2	<0.053	<2	<0.053	<2	<0.053	<2	<0.019	-
11:10	<2	<0.053	<2	<0.053	2	0.06	<2	<0.019	0.06
11:13	<2	<0.053	<2	<0.053	<2	<0.053	<2	<0.019	-
11:16	<2	<0.053	2	0.05	<2	<0.053	<2	<0.019	0.05
11:19	<2	<0.053	<2	<0.053	<2	<0.053	<2	<0.019	-
11:22	<2	<0.053	<2	<0.053	<2	<0.053	<2	<0.019	-
11:25	<2	<0.053	<2	<0.053	<2	<0.053	2	0.02	0.04
11:28	<2	<0.053	<2	<0.053	<2	<0.053	<2	<0.019	-
11:31	<2	<0.053	<2	<0.053	3	0.06	<2	<0.019	0.06
11:34	<2	<0.053	2	0.05	<2	<0.053	<2	<0.019	0.05
11:37	2	0.06	<2	<0.053	<2	<0.053	3	0.02	0.10
11:40	<2	<0.053	<2	<0.053	<2	<0.053	4	0.03	0.05
11:43	3	0.06	<2	<0.053	<2	<0.053	<2	<0.019	0.06
11:46	<2	<0.053	<2	<0.053	<2	<0.053	<2	<0.019	-
11:49	6	0.10	<2	<0.053	<2	<0.053	<2	<0.019	0.10
11:52	<2	<0.053	<2	<0.053	<2	<0.053	2	0.02	0.04
11:55	<2	<0.053	<2	<0.053	<2	<0.053	4	0.03	0.05
11:58	6	0.09	<2	<0.053	<2	<0.053	<2	<0.019	0.09
12:01	6	0.09	<2	<0.053	<2	<0.053	<2	<0.019	0.09
12:04	<2	<0.053	<2	<0.053	<2	<0.053	4	0.03	0.06
12:07	<2	<0.053	<2	<0.053	<2	<0.053	<2	<0.019	-
12:10	<2	<0.053	5	0.08	<2	<0.053	<2	<0.019	0.08
12:13	<2	<0.053	<2	<0.053	<2	<0.053	<2	<0.019	-
12:16	5	0.09	<2	<0.053	<2	<0.053	<2	<0.019	0.09
12:19	<2	<0.053	<2	<0.053	<2	<0.053	<2	<0.019	-
12:22	<2	<0.053	<2	<0.053	<2	<0.053	<2	<0.019	-
12:25	<2	<0.053	<2	<0.053	3	0.07	<2	<0.019	0.07
12:28	4	0.08	<2	<0.053	<2	<0.053	<2	<0.019	0.08
12:31	2	0.06	<2	<0.053	<2	<0.053	<2	<0.019	0.06
12:34	<2	<0.053	<2	<0.053	<2	<0.053	<2	<0.019	-
12:37	2	0.06	<2	<0.053	<2	<0.053	<2	<0.019	0.06
12:40	<2	<0.053	<2	<0.053	<2	<0.053	<2	<0.019	-
12:43	<2	<0.053	<2	<0.053	<2	<0.053	<2	<0.019	-
12:46	<2	<0.053	<2	<0.053	<2	<0.053	<2	<0.019	-

RUN DATA

Number 1

Client: **New Indy**
Location: **Catawba, SC**
Source:

Method **16**
Calibration **1**

Project Number: **15730.001.006**
Operator: **T. Simpkins**
Date: **23 Mar 2021**

Time	H_2S		MeSH		DMS		DMDS		TRS
	area	ppm	area	ppm	area	ppm	area	ppm	ppm
12:49	<2	<0.053	<2	<0.053	<2	<0.053	3	0.02	0.05
1254 wind still blowing west									
12:52	3	0.07	<2	<0.053	<2	<0.053	<2	<0.019	0.07
12:55	<2	<0.053	<2	<0.053	<2	<0.053	<2	<0.019	-
12:58	<2	<0.053	<2	<0.053	<2	<0.053	<2	<0.019	-
13:01	<2	<0.053	<2	<0.053	<2	<0.053	<2	<0.019	-
13:04	<2	<0.053	<2	<0.053	<2	<0.053	<2	<0.019	-
13:07	<2	<0.053	<2	<0.053	<2	<0.053	3	0.02	0.05
13:10	6	0.09	<2	<0.053	<2	<0.053	<2	<0.019	0.09
13:13	2	0.06	<2	<0.053	<2	<0.053	<2	<0.019	0.06
moving trailer									
13:16	<2	<0.053	<2	<0.053	<2	<0.053	<2	<0.019	-
13:19	<2	<0.053	<2	<0.053	<2	<0.053	<2	<0.019	-
13:22	8	0.11	<2	<0.053	<2	<0.053	<2	<0.019	0.11
13:25	<2	<0.053	<2	<0.053	<2	<0.053	<2	<0.019	-
13:28	49	0.27	246	0.62	49	0.25	4	0.03	1.20
13:31	<2	<0.053	<2	<0.053	<2	<0.053	<2	<0.019	-
13:34	2	0.06	<2	<0.053	<2	<0.053	<2	<0.019	0.06
13:37	<2	<0.053	<2	<0.053	<2	<0.053	<2	<0.019	-
13:40	<2	<0.053	<2	<0.053	<2	<0.053	3	0.02	0.05
13:43	<2	<0.053	<2	<0.053	<2	<0.053	<2	<0.019	-
NW of No. 3 RB Stack across street									
13:46	<2	<0.053	<2	<0.053	<2	<0.053	<2	<0.019	-
wind blowing toward NW									
13:49	3	0.07	<2	<0.053	<2	<0.053	2	0.02	0.11
13:52	14	0.14	96	0.39	23	0.18	6	0.03	0.77
13:55	<2	<0.053	<2	<0.053	<2	<0.053	<2	<0.019	-
13:58	4	0.08	<2	<0.053	<2	<0.053	<2	<0.019	0.08
14:01	78	0.34	180	0.53	32	0.21	<2	<0.019	1.07
14:04	<2	<0.053	3	0.07	<2	<0.053	<2	<0.019	0.07
14:07	5	0.08	<2	<0.053	3	0.06	<2	<0.019	0.14
14:10	<2	<0.053	<2	<0.053	<2	<0.053	<2	<0.019	-
14:13	<2	<0.053	<2	<0.053	<2	<0.053	<2	<0.019	-
14:16	62	0.30	6	0.09	6	0.09	<2	<0.019	0.48
14:19	<2	<0.053	<2	<0.053	<2	<0.053	<2	<0.019	-
14:22	3	0.07	<2	<0.053	<2	<0.053	<2	<0.019	0.07
14:25	<2	<0.053	<2	<0.053	<2	<0.053	<2	<0.019	-
14:28	<2	<0.053	<2	<0.053	<2	<0.053	<2	<0.019	-
14:31	<2	<0.053	<2	<0.053	<2	<0.053	<2	<0.019	-
14:34	3	0.06	<2	<0.053	<2	<0.053	<2	<0.019	0.06

RUN DATA

Number 1

Client: **New Indy**
Location: **Catawba, SC**
Source:

Method **16**
Calibration **1**

Project Number: **15730.001.006**
Operator: **T. Simpkins**
Date: **23 Mar 2021**

Time	H_2S		MeSH		DMS		DMDS		TRS
	area	ppm	area	ppm	area	ppm	area	ppm	ppm
14:37	844	1.13	235	0.61	52	0.26	<2	<0.019	2.00
14:40	<2	<0.053	223	0.59	51	0.26	5	0.03	0.91
14:43	<2	<0.053	407	0.81	118	0.39	6	0.03	1.26
14:46	<2	<0.053	<2	<0.053	<2	<0.053	<2	<0.019	-
14:49	107	0.40	69	0.33	4	0.08	<2	<0.019	0.80
14:52	3	0.07	<2	<0.053	<2	<0.053	<2	<0.019	0.07
14:55	3	0.06	<2	<0.053	<2	<0.053	<2	<0.019	0.06
14:58	394	0.77	419	0.82	76	0.32	6	0.03	1.97
15:01	<2	<0.053	8	0.11	3	0.07	2	0.02	0.21
15:04	6	0.10	2	0.06	4	0.07	<2	<0.019	0.23
15:07	166	0.50	56	0.29	5	0.08	<2	<0.019	0.87
15:10	22	0.18	8	0.11	4	0.08	<2	<0.019	0.36
15:13	5	0.08	<2	<0.053	<2	<0.053	<2	<0.019	0.08
15:16	<2	<0.053	<2	<0.053	<2	<0.053	<2	<0.019	-
15:19	4	0.07	<2	<0.053	<2	<0.053	<2	<0.019	0.07
15:22	<2	<0.053	<2	<0.053	<2	<0.053	<2	<0.019	-
15:25	<2	<0.053	<2	<0.053	<2	<0.053	4	0.02	0.05
15:28	121	0.42	83	0.36	6	0.09	<2	<0.019	0.87
15:31	<2	<0.053	2	0.05	<2	<0.053	<2	<0.019	0.05
15:34	<2	<0.053	3	0.06	4	0.07	<2	<0.019	0.14
15:37	15	0.15	4	0.08	2	0.06	<2	<0.019	0.28
15:40	3	0.07	<2	<0.053	<2	<0.053	5	0.03	0.13
15:43	<2	<0.053	<2	<0.053	2	0.06	<2	<0.019	0.06
15:47	<2	<0.053	<2	<0.053	<2	<0.053	<2	<0.019	-
15:50	<2	<0.053	2	0.06	<2	<0.053	<2	<0.019	0.06
15:53	2	0.06	<2	<0.053	<2	<0.053	<2	<0.019	0.06
15:56	<2	<0.053	2	0.05	<2	<0.053	<2	<0.019	0.05
15:59	4	0.07	<2	<0.053	<2	<0.053	<2	<0.019	0.07
16:02	<2	<0.053	<2	<0.053	<2	<0.053	<2	<0.019	-
16:05	2	0.05	<2	<0.053	<2	<0.053	<2	<0.019	0.05
16:08	<2	<0.053	4	0.08	<2	<0.053	<2	<0.019	0.08
16:11	<2	<0.053	<2	<0.053	<2	<0.053	<2	<0.019	-
16:14	278	0.64	162	0.50	32	0.20	<2	<0.019	1.35
16:17	<2	<0.053	<2	<0.053	<2	<0.053	<2	<0.019	-
16:20	3	0.07	<2	<0.053	<2	<0.053	<2	<0.019	0.07
16:23	<2	<0.053	<2	<0.053	<2	<0.053	<2	<0.019	-
				rail car area					
				Wind Direction NW					
16:26	<2	<0.053	<2	<0.053	<2	<0.053	<2	<0.019	-
16:29	<2	<0.053	<2	<0.053	<2	<0.053	<2	<0.019	-

RUN DATA

Number 1

Client: **New Indy**
Location: **Catawba, SC**
Source:

Method **16**
Calibration **1**

Project Number: **15730.001.006**
Operator: **T. Simpkins**
Date: **23 Mar 2021**

Time	H_2S		MeSH		DMS		DMDS		TRS
	area	ppm	area	ppm	area	ppm	area	ppm	ppm
16:32	4	0.07	<2	<0.053	<2	<0.053	<2	<0.019	0.07
16:35	<2	<0.053	<2	<0.053	<2	<0.053	<2	<0.019	-
16:38	<2	<0.053	<2	<0.053	5	0.08	<2	<0.019	0.08
16:41	3	0.07	<2	<0.053	<2	<0.053	<2	<0.019	0.07
16:44	3	0.06	<2	<0.053	<2	<0.053	<2	<0.019	0.06
16:47	3	0.06	<2	<0.053	<2	<0.053	4	0.03	0.11
16:50	3	0.06	<2	<0.053	<2	<0.053	3	0.02	0.11
16:53	<2	<0.053	<2	<0.053	<2	<0.053	3	0.02	0.04
16:56	<2	<0.053	<2	<0.053	<2	<0.053	<2	<0.019	-
16:59	<2	<0.053	3	0.07	<2	<0.053	<2	<0.019	0.07
17:02	<2	<0.053	<2	<0.053	<2	<0.053	<2	<0.019	-
17:05	7	0.10	<2	<0.053	<2	<0.053	<2	<0.019	0.10
17:08	3	0.07	<2	<0.053	<2	<0.053	<2	<0.019	0.07
17:11	4	0.07	<2	<0.053	<2	<0.053	<2	<0.019	0.07
17:14	7	0.10	<2	<0.053	<2	<0.053	<2	<0.019	0.10
17:17	2	0.06	<2	<0.053	<2	<0.053	<2	<0.019	0.06
17:20	3	0.06	<2	<0.053	<2	<0.053	<2	<0.019	0.06
17:23	<2	<0.053	<2	<0.053	<2	<0.053	<2	<0.019	-
17:26	<2	<0.053	<2	<0.053	<2	<0.053	<2	<0.019	-
17:29	<2	<0.053	<2	<0.053	36	0.22	<2	<0.019	0.22
17:32	3	0.06	<2	<0.053	<2	<0.053	5	0.03	0.12
17:35	<2	<0.053	<2	<0.053	<2	<0.053	<2	<0.019	-
17:38	3	0.07	<2	<0.053	<2	<0.053	<2	<0.019	0.07
17:41	<2	<0.053	<2	<0.053	<2	<0.053	<2	<0.019	-
17:44	<2	<0.053	<2	<0.053	<2	<0.053	<2	<0.019	-
17:47	<2	<0.053	<2	<0.053	12	0.13	<2	<0.019	0.13
17:50	<2	<0.053	<2	<0.053	<2	<0.053	<2	<0.019	-
17:53	<2	<0.053	<2	<0.053	<2	<0.053	<2	<0.019	-
17:56	<2	<0.053	<2	<0.053	<2	<0.053	<2	<0.019	-
17:59	<2	<0.053	<2	<0.053	<2	<0.053	<2	<0.019	-
18:02	<2	<0.053	<2	<0.053	<2	<0.053	<2	<0.019	-
18:05	<2	<0.053	<2	<0.053	<2	<0.053	<2	<0.019	-
18:08	<2	<0.053	<2	<0.053	<2	<0.053	<2	<0.019	-
18:11	<2	<0.053	<2	<0.053	<2	<0.053	<2	<0.019	-
18:14	3	0.07	<2	<0.053	<2	<0.053	<2	<0.019	0.07
18:17	<2	<0.053	<2	<0.053	3	0.07	<2	<0.019	0.07
18:20	<2	<0.053	<2	<0.053	<2	<0.053	<2	<0.019	-
18:23	2	0.05	<2	<0.053	<2	<0.053	3	0.02	0.10
18:26	<2	<0.053	<2	<0.053	<2	<0.053	<2	<0.019	-
18:29	<2	<0.053	<2	<0.053	<2	<0.053	<2	<0.019	-

RUN DATA

Number 1

Client: **New Indy**
Location: **Catawba, SC**
Source:

Method **16**
Calibration **1**

Project Number: **15730.001.006**
Operator: **T. Simpkins**
Date: **23 Mar 2021**

Time	H_2S		MeSH		DMS		DMDS		TRS
	area	ppm	area	ppm	area	ppm	area	ppm	ppm
18:32	<2	<0.053	<2	<0.053	<2	<0.053	<2	<0.019	-
18:35	<2	<0.053	<2	<0.053	<2	<0.053	<2	<0.019	-
18:38	<2	<0.053	<2	<0.053	<2	<0.053	<2	<0.019	-
18:41	<2	<0.053	<2	<0.053	<2	<0.053	<2	<0.019	-
18:44	<2	<0.053	<2	<0.053	<2	<0.053	<2	<0.019	-
18:47	<2	<0.053	<2	<0.053	<2	<0.053	<2	<0.019	-
18:50	<2	<0.053	<2	<0.053	<2	<0.053	<2	<0.019	-
18:53	<2	<0.053	4	0.07	<2	<0.053	<2	<0.019	0.07
18:56	<2	<0.053	<2	<0.053	<2	<0.053	<2	<0.019	-
18:59	<2	<0.053	<2	<0.053	<2	<0.053	5	0.03	0.06
19:02	<2	<0.053	<2	<0.053	<2	<0.053	3	0.02	0.05
19:05	<2	<0.053	<2	<0.053	<2	<0.053	<2	<0.019	-
19:08	<2	<0.053	<2	<0.053	<2	<0.053	<2	<0.019	-
19:11	3	0.07	5	0.08	<2	<0.053	3	0.02	0.19
19:14	3	0.06	<2	<0.053	<2	<0.053	<2	<0.019	0.06
19:17	<2	<0.053	<2	<0.053	<2	<0.053	<2	<0.019	-
19:20	<2	<0.053	<2	<0.053	3	0.06	4	0.03	0.12
19:23	<2	<0.053	<2	<0.053	<2	<0.053	<2	<0.019	-
19:26	<2	<0.053	<2	<0.053	<2	<0.053	4	0.03	0.05
19:29	<2	<0.053	<2	<0.053	<2	<0.053	<2	<0.019	-
19:32	<2	<0.053	<2	<0.053	<2	<0.053	<2	<0.019	-
19:35	<2	<0.053	<2	<0.053	4	0.07	<2	<0.019	0.07
19:38	<2	<0.053	9	0.11	<2	<0.053	<2	<0.019	0.11
19:41	5	0.08	<2	<0.053	<2	<0.053	<2	<0.019	0.08
19:44	5	0.08	<2	<0.053	<2	<0.053	<2	<0.019	0.08
19:47	<2	<0.053	<2	<0.053	<2	<0.053	<2	<0.019	-
19:50	<2	<0.053	<2	<0.053	<2	<0.053	<2	<0.019	-
19:53	<2	<0.053	<2	<0.053	<2	<0.053	<2	<0.019	-
19:56	5	0.08	<2	<0.053	<2	<0.053	<2	<0.019	0.08
19:59	<2	<0.053	<2	<0.053	<2	<0.053	<2	<0.019	-
20:02	<2	<0.053	<2	<0.053	<2	<0.053	<2	<0.019	-
20:05	4	0.07	<2	<0.053	<2	<0.053	5	0.03	0.13
20:08	3	0.07	<2	<0.053	<2	<0.053	3	0.02	0.11
20:11	2	0.06	<2	<0.053	<2	<0.053	<2	<0.019	0.06
20:14	<2	<0.053	<2	<0.053	<2	<0.053	<2	<0.019	-
20:17	<2	<0.053	<2	<0.053	<2	<0.053	<2	<0.019	-
20:20	<2	<0.053	<2	<0.053	4	0.07	<2	<0.019	0.07
20:23	3	0.06	<2	<0.053	<2	<0.053	<2	<0.019	0.06
20:26	<2	<0.053	<2	<0.053	<2	<0.053	<2	<0.019	-
20:29	4	0.07	<2	<0.053	<2	<0.053	<2	<0.019	0.07

RUN DATA

Number 1

Client: **New Indy**
Location: **Catawba, SC**
Source:

Method **16**
Calibration **1**

Project Number: **15730.001.006**
Operator: **T. Simpkins**
Date: **23 Mar 2021**

Time	H_2S		MeSH		DMS		DMDS		TRS
	area	ppm	area	ppm	area	ppm	area	ppm	ppm
20:32	<2	<0.053	<2	<0.053	<2	<0.053	<2	<0.019	-
20:35	5	0.08	<2	<0.053	<2	<0.053	<2	<0.019	0.08
20:38	<2	<0.053	<2	<0.053	<2	<0.053	2	0.02	0.04
20:41	4	0.08	<2	<0.053	<2	<0.053	<2	<0.019	0.08
20:44	<2	<0.053	<2	<0.053	<2	<0.053	2	0.02	0.04
20:47	<2	<0.053	2	0.05	<2	<0.053	<2	<0.019	0.05
20:50	<2	<0.053	<2	<0.053	<2	<0.053	<2	<0.019	-
20:53	<2	<0.053	<2	<0.053	<2	<0.053	<2	<0.019	-
20:56	2	0.06	<2	<0.053	<2	<0.053	3	0.02	0.10
20:59	<2	<0.053	<2	<0.053	<2	<0.053	<2	<0.019	-
21:02	<2	<0.053	<2	<0.053	<2	<0.053	<2	<0.019	-
21:05	<2	<0.053	<2	<0.053	<2	<0.053	<2	<0.019	-
21:08	<2	<0.053	<2	<0.053	<2	<0.053	<2	<0.019	-
21:11	<2	<0.053	<2	<0.053	<2	<0.053	<2	<0.019	-
21:14	4	0.08	<2	<0.053	<2	<0.053	<2	<0.019	0.08
21:17	<2	<0.053	<2	<0.053	<2	<0.053	<2	<0.019	-
21:20	<2	<0.053	<2	<0.053	<2	<0.053	<2	<0.019	-
21:23	<2	<0.053	<2	<0.053	<2	<0.053	<2	<0.019	-
21:26	2	0.06	<2	<0.053	<2	<0.053	8	0.04	0.13
21:29	<2	<0.053	<2	<0.053	<2	<0.053	<2	<0.019	-
21:32	2	0.06	<2	<0.053	<2	<0.053	<2	<0.019	0.06
21:35	<2	<0.053	<2	<0.053	<2	<0.053	<2	<0.019	-
21:38	<2	<0.053	<2	<0.053	<2	<0.053	<2	<0.019	-
21:41	<2	<0.053	<2	<0.053	<2	<0.053	4	0.03	0.05
21:44	<2	<0.053	<2	<0.053	<2	<0.053	<2	<0.019	-
21:48	<2	<0.053	<2	<0.053	<2	<0.053	2	0.02	0.04
21:51	3	0.06	<2	<0.053	4	0.07	<2	<0.019	0.13
21:54	<2	<0.053	<2	<0.053	<2	<0.053	<2	<0.019	-
21:57	<2	<0.053	<2	<0.053	<2	<0.053	<2	<0.019	-
22:00	<2	<0.053	<2	<0.053	<2	<0.053	<2	<0.019	-
22:03	<2	<0.053	<2	<0.053	5	0.08	<2	<0.019	0.08
22:06	<2	<0.053	<2	<0.053	<2	<0.053	<2	<0.019	-
22:09	2	0.06	<2	<0.053	2	0.06	<2	<0.019	0.12
22:12	2	0.06	<2	<0.053	<2	<0.053	<2	<0.019	0.06
22:15	<2	<0.053	<2	<0.053	<2	<0.053	<2	<0.019	-
22:18	<2	<0.053	<2	<0.053	<2	<0.053	<2	<0.019	-
22:21	<2	<0.053	<2	<0.053	<2	<0.053	<2	<0.019	-
22:24	2	0.06	<2	<0.053	<2	<0.053	<2	<0.019	0.06
22:27	<2	<0.053	<2	<0.053	<2	<0.053	<2	<0.019	-
22:30	<2	<0.053	<2	<0.053	<2	<0.053	<2	<0.019	-

RUN DATA

Number 1

Client: **New Indy**
Location: **Catawba, SC**
Source:

Method **16**
Calibration **1**

Project Number: **15730.001.006**
Operator: **T. Simpkins**
Date: **23 Mar 2021**

Time	H_2S		MeSH		DMS		DMDS		TRS
	area	ppm	area	ppm	area	ppm	area	ppm	ppm
22:33	4	0.08	<2	<0.053	<2	<0.053	<2	<0.019	0.08
22:36	<2	<0.053	3	0.06	<2	<0.053	<2	<0.019	0.06
22:39	<2	<0.053	<2	<0.053	<2	<0.053	<2	<0.019	-
22:42	3	0.07	<2	<0.053	<2	<0.053	<2	<0.019	0.07
22:45	<2	<0.053	<2	<0.053	<2	<0.053	<2	<0.019	-
22:48	4	0.07	5	0.09	<2	<0.053	<2	<0.019	0.16
22:51	<2	<0.053	<2	<0.053	<2	<0.053	<2	<0.019	-
22:54	<2	<0.053	<2	<0.053	<2	<0.053	<2	<0.019	-
22:57	<2	<0.053	<2	<0.053	<2	<0.053	3	0.02	0.04
23:00	<2	<0.053	4	0.08	<2	<0.053	<2	<0.019	0.08
23:03	4	0.07	<2	<0.053	<2	<0.053	<2	<0.019	0.07
23:06	3	0.06	<2	<0.053	<2	<0.053	<2	<0.019	0.06
23:09	2	0.05	<2	<0.053	<2	<0.053	<2	<0.019	0.05
23:12	<2	<0.053	<2	<0.053	<2	<0.053	<2	<0.019	-
23:15	2	0.06	<2	<0.053	<2	<0.053	<2	<0.019	0.06
23:18	<2	<0.053	<2	<0.053	<2	<0.053	<2	<0.019	-
23:21	2	0.06	<2	<0.053	<2	<0.053	<2	<0.019	0.06
23:24	<2	<0.053	<2	<0.053	<2	<0.053	<2	<0.019	-
23:27	<2	<0.053	<2	<0.053	<2	<0.053	<2	<0.019	-
23:30	<2	<0.053	<2	<0.053	<2	<0.053	<2	<0.019	-
23:33	<2	<0.053	<2	<0.053	<2	<0.053	<2	<0.019	-
23:36	<2	<0.053	<2	<0.053	<2	<0.053	<2	<0.019	-
23:39	3	0.07	<2	<0.053	<2	<0.053	<2	<0.019	0.07
23:42	<2	<0.053	<2	<0.053	<2	<0.053	<2	<0.019	-
23:45	3	0.06	<2	<0.053	<2	<0.053	<2	<0.019	0.06
23:48	<2	<0.053	<2	<0.053	<2	<0.053	<2	<0.019	-
23:51	<2	<0.053	<2	<0.053	<2	<0.053	<2	<0.019	-
23:54	<2	<0.053	<2	<0.053	<2	<0.053	<2	<0.019	-
23:57	<2	<0.053	2	0.06	<2	<0.053	<2	<0.019	0.06
00:00	<2	<0.053	<2	<0.053	<2	<0.053	<2	<0.019	-
00:03	<2	<0.053	<2	<0.053	<2	<0.053	<2	<0.019	-
00:06	<2	<0.053	<2	<0.053	<2	<0.053	<2	<0.019	-
00:09	<2	<0.053	<2	<0.053	<2	<0.053	<2	<0.019	-
00:12	<2	<0.053	<2	<0.053	<2	<0.053	<2	<0.019	-
00:15	2	0.05	<2	<0.053	<2	<0.053	<2	<0.019	0.05
00:18	<2	<0.053	<2	<0.053	<2	<0.053	<2	<0.019	-
00:21	2	0.05	<2	<0.053	<2	<0.053	<2	<0.019	0.05
00:24	3	0.06	<2	<0.053	<2	<0.053	<2	<0.019	0.06
00:27	<2	<0.053	<2	<0.053	<2	<0.053	<2	<0.019	-
00:30	5	0.08	<2	<0.053	<2	<0.053	<2	<0.019	0.08

RUN DATA

Number 1

Client: **New Indy**
Location: **Catawba, SC**
Source:

Method **16**
Calibration **1**

Project Number: **15730.001.006**
Operator: **T. Simpkins**
Date: **23 Mar 2021**

Time	H_2S		MeSH		DMS		DMDS		TRS
	area	ppm	area	ppm	area	ppm	area	ppm	ppm
00:33	<2	<0.053	<2	<0.053	<2	<0.053	3	0.02	0.05
00:36	4	0.08	<2	<0.053	<2	<0.053	<2	<0.019	0.08
00:39	<2	<0.053	<2	<0.053	<2	<0.053	<2	<0.019	-
00:42	<2	<0.053	<2	<0.053	<2	<0.053	<2	<0.019	-
00:45	4	0.07	<2	<0.053	<2	<0.053	<2	<0.019	0.07
00:48	<2	<0.053	4	0.08	<2	<0.053	<2	<0.019	0.08
00:51	<2	<0.053	<2	<0.053	<2	<0.053	<2	<0.019	-
00:54	2	0.06	<2	<0.053	<2	<0.053	<2	<0.019	0.06
00:57	3	0.06	<2	<0.053	<2	<0.053	<2	<0.019	0.06
01:00	<2	<0.053	<2	<0.053	<2	<0.053	<2	<0.019	-
01:03	<2	<0.053	<2	<0.053	<2	<0.053	<2	<0.019	-
01:06	<2	<0.053	<2	<0.053	<2	<0.053	<2	<0.019	-
01:09	<2	<0.053	<2	<0.053	<2	<0.053	<2	<0.019	-
01:12	<2	<0.053	4	0.07	<2	<0.053	<2	<0.019	0.07
01:15	<2	<0.053	<2	<0.053	<2	<0.053	<2	<0.019	-
01:18	<2	<0.053	<2	<0.053	<2	<0.053	<2	<0.019	-
01:21	<2	<0.053	<2	<0.053	<2	<0.053	4	0.03	0.05
01:24	2	0.06	<2	<0.053	4	0.08	<2	<0.019	0.13
01:27	<2	<0.053	<2	<0.053	<2	<0.053	<2	<0.019	-
01:30	<2	<0.053	<2	<0.053	<2	<0.053	<2	<0.019	-
01:33	<2	<0.053	<2	<0.053	<2	<0.053	5	0.03	0.06
01:36	<2	<0.053	<2	<0.053	<2	<0.053	<2	<0.019	-
01:39	<2	<0.053	<2	<0.053	<2	<0.053	<2	<0.019	-
01:42	<2	<0.053	<2	<0.053	<2	<0.053	<2	<0.019	-
01:45	2	0.05	<2	<0.053	<2	<0.053	<2	<0.019	0.05
01:48	<2	<0.053	<2	<0.053	<2	<0.053	<2	<0.019	-
01:51	2	0.06	<2	<0.053	<2	<0.053	<2	<0.019	0.06
01:54	<2	<0.053	<2	<0.053	<2	<0.053	<2	<0.019	-
01:57	<2	<0.053	<2	<0.053	<2	<0.053	<2	<0.019	-
02:00	<2	<0.053	<2	<0.053	<2	<0.053	<2	<0.019	-
02:03	<2	<0.053	<2	<0.053	<2	<0.053	<2	<0.019	-
02:06	<2	<0.053	<2	<0.053	<2	<0.053	<2	<0.019	-
02:09	<2	<0.053	<2	<0.053	<2	<0.053	<2	<0.019	-
02:12	3	0.07	<2	<0.053	<2	<0.053	<2	<0.019	0.07
02:15	8	0.10	<2	<0.053	<2	<0.053	<2	<0.019	0.10
02:18	<2	<0.053	<2	<0.053	<2	<0.053	<2	<0.019	-
02:21	<2	<0.053	<2	<0.053	<2	<0.053	<2	<0.019	-
02:24	<2	<0.053	<2	<0.053	<2	<0.053	2	0.02	0.04
02:27	<2	<0.053	<2	<0.053	<2	<0.053	<2	<0.019	-
02:30	<2	<0.053	<2	<0.053	<2	<0.053	<2	<0.019	-

RUN DATA

Number 1

Client: **New Indy**
Location: **Catawba, SC**
Source:

Method **16**
Calibration **1**

Project Number: **15730.001.006**
Operator: **T. Simpkins**
Date: **23 Mar 2021**

Time	H_2S		MeSH		DMS		DMDS		TRS
	area	ppm	area	ppm	area	ppm	area	ppm	ppm
02:33	<2	<0.053	<2	<0.053	<2	<0.053	<2	<0.019	-
02:36	<2	<0.053	<2	<0.053	<2	<0.053	<2	<0.019	-
02:39	<2	<0.053	<2	<0.053	<2	<0.053	<2	<0.019	-
02:42	4	0.08	<2	<0.053	<2	<0.053	<2	<0.019	0.08
02:45	<2	<0.053	<2	<0.053	<2	<0.053	<2	<0.019	-
02:48	<2	<0.053	<2	<0.053	<2	<0.053	<2	<0.019	-
02:51	<2	<0.053	<2	<0.053	<2	<0.053	<2	<0.019	-
02:54	<2	<0.053	<2	<0.053	<2	<0.053	<2	<0.019	-
02:57	<2	<0.053	<2	<0.053	<2	<0.053	<2	<0.019	-
03:00	<2	<0.053	<2	<0.053	<2	<0.053	<2	<0.019	-
03:03	<2	<0.053	<2	<0.053	<2	<0.053	<2	<0.019	-
03:06	<2	<0.053	<2	<0.053	<2	<0.053	<2	<0.019	-
03:09	<2	<0.053	<2	<0.053	<2	<0.053	<2	<0.019	-
03:12	3	0.07	<2	<0.053	<2	<0.053	2	0.02	0.11
03:15	11	0.12	<2	<0.053	<2	<0.053	<2	<0.019	0.12
03:18	<2	<0.053	<2	<0.053	<2	<0.053	<2	<0.019	-
03:21	2	0.06	<2	<0.053	<2	<0.053	<2	<0.019	0.06
03:24	<2	<0.053	<2	<0.053	<2	<0.053	<2	<0.019	-
03:27	<2	<0.053	<2	<0.053	<2	<0.053	<2	<0.019	-
03:30	6	0.10	<2	<0.053	<2	<0.053	<2	<0.019	0.10
03:33	<2	<0.053	<2	<0.053	<2	<0.053	<2	<0.019	-
03:36	2	0.06	<2	<0.053	<2	<0.053	<2	<0.019	0.06
03:39	<2	<0.053	<2	<0.053	<2	<0.053	<2	<0.019	-
03:42	<2	<0.053	<2	<0.053	<2	<0.053	<2	<0.019	-
03:45	<2	<0.053	<2	<0.053	<2	<0.053	<2	<0.019	-
03:49	<2	<0.053	<2	<0.053	<2	<0.053	<2	<0.019	-
03:52	<2	<0.053	<2	<0.053	<2	<0.053	<2	<0.019	-
03:55	<2	<0.053	<2	<0.053	<2	<0.053	<2	<0.019	-
03:58	<2	<0.053	2	0.05	<2	<0.053	3	0.02	0.10
04:01	<2	<0.053	<2	<0.053	<2	<0.053	<2	<0.019	-
04:04	<2	<0.053	<2	<0.053	<2	<0.053	<2	<0.019	-
04:07	4	0.07	<2	<0.053	<2	<0.053	<2	<0.019	0.07
04:10	<2	<0.053	<2	<0.053	<2	<0.053	<2	<0.019	-
04:13	3	0.06	<2	<0.053	<2	<0.053	<2	<0.019	0.06
04:16	<2	<0.053	<2	<0.053	<2	<0.053	<2	<0.019	-
04:19	<2	<0.053	<2	<0.053	<2	<0.053	<2	<0.019	-
04:22	<2	<0.053	<2	<0.053	3	0.06	<2	<0.019	0.06
04:25	<2	<0.053	<2	<0.053	<2	<0.053	<2	<0.019	-
04:28	<2	<0.053	<2	<0.053	<2	<0.053	<2	<0.019	-
04:31	<2	<0.053	<2	<0.053	<2	<0.053	<2	<0.019	-

RUN DATA

Number 1

Client: **New Indy**
Location: **Catawba, SC**
Source:

Method **16**
Calibration **1**

Project Number: **15730.001.006**
Operator: **T. Simpkins**
Date: **23 Mar 2021**

Time	H_2S		MeSH		DMS		DMDS		TRS
	area	ppm	area	ppm	area	ppm	area	ppm	ppm
04:34	<2	<0.053	<2	<0.053	<2	<0.053	<2	<0.019	-
04:37	<2	<0.053	3	0.07	<2	<0.053	<2	<0.019	0.07
04:40	4	0.08	<2	<0.053	<2	<0.053	3	0.02	0.12
04:43	<2	<0.053	<2	<0.053	<2	<0.053	<2	<0.019	-
04:46	2	0.05	<2	<0.053	<2	<0.053	<2	<0.019	0.05
04:49	2	0.05	<2	<0.053	<2	<0.053	<2	<0.019	0.05
04:52	<2	<0.053	<2	<0.053	<2	<0.053	3	0.02	0.04
04:55	<2	<0.053	<2	<0.053	<2	<0.053	<2	<0.019	-
04:58	7	0.10	<2	<0.053	<2	<0.053	<2	<0.019	0.10
05:01	4	0.07	<2	<0.053	<2	<0.053	<2	<0.019	0.07
05:04	2	0.05	<2	<0.053	<2	<0.053	<2	<0.019	0.05
05:07	<2	<0.053	<2	<0.053	<2	<0.053	<2	<0.019	-
05:10	<2	<0.053	<2	<0.053	<2	<0.053	<2	<0.019	-
05:13	<2	<0.053	<2	<0.053	<2	<0.053	<2	<0.019	-
05:16	<2	<0.053	<2	<0.053	<2	<0.053	<2	<0.019	-
05:19	3	0.07	<2	<0.053	<2	<0.053	<2	<0.019	0.07
05:22	<2	<0.053	<2	<0.053	<2	<0.053	<2	<0.019	-
05:25	3	0.07	<2	<0.053	<2	<0.053	<2	<0.019	0.07
05:28	<2	<0.053	<2	<0.053	<2	<0.053	<2	<0.019	-
05:31	<2	<0.053	<2	<0.053	<2	<0.053	<2	<0.019	-
05:34	<2	<0.053	<2	<0.053	<2	<0.053	<2	<0.019	-
05:37	5	0.08	<2	<0.053	<2	<0.053	<2	<0.019	0.08
05:40	7	0.10	<2	<0.053	<2	<0.053	<2	<0.019	0.10
05:43	<2	<0.053	<2	<0.053	<2	<0.053	<2	<0.019	-
05:46	<2	<0.053	<2	<0.053	<2	<0.053	6	0.03	0.06
05:49	<2	<0.053	<2	<0.053	<2	<0.053	<2	<0.019	-
05:52	2	0.06	<2	<0.053	<2	<0.053	<2	<0.019	0.06
05:55	<2	<0.053	<2	<0.053	<2	<0.053	<2	<0.019	-
05:58	<2	<0.053	<2	<0.053	<2	<0.053	5	0.03	0.06
06:01	2	0.06	<2	<0.053	<2	<0.053	<2	<0.019	0.06
06:04	<2	<0.053	<2	<0.053	<2	<0.053	<2	<0.019	-
06:07	<2	<0.053	<2	<0.053	<2	<0.053	<2	<0.019	-
06:10	<2	<0.053	<2	<0.053	<2	<0.053	<2	<0.019	-
06:13	3	0.06	<2	<0.053	<2	<0.053	<2	<0.019	0.06
06:16	<2	<0.053	<2	<0.053	<2	<0.053	<2	<0.019	-
06:19	<2	<0.053	<2	<0.053	<2	<0.053	<2	<0.019	-
06:22	2	0.06	<2	<0.053	<2	<0.053	<2	<0.019	0.06
06:25	<2	<0.053	<2	<0.053	22	0.17	<2	<0.019	0.17
06:28	<2	<0.053	<2	<0.053	<2	<0.053	<2	<0.019	-
06:31	<2	<0.053	<2	<0.053	<2	<0.053	<2	<0.019	-

RUN DATA

Number 1

Client: **New Indy**
Location: **Catawba, SC**
Source:

Method **16**
Calibration **1**

Project Number: **15730.001.006**
Operator: **T. Simpkins**
Date: **23 Mar 2021**

Time	H_2S		MeSH		DMS		DMDS		TRS
	area	ppm	area	ppm	area	ppm	area	ppm	ppm
06:34	2	0.06	<2	<0.053	<2	<0.053	<2	<0.019	0.06
06:37	2	0.06	<2	<0.053	<2	<0.053	2	0.02	0.10
06:40	<2	<0.053	<2	<0.053	<2	<0.053	<2	<0.019	-
06:43	3	0.07	<2	<0.053	4	0.07	<2	<0.019	0.14
06:46	<2	<0.053	<2	<0.053	<2	<0.053	4	0.03	0.05
06:49	<2	<0.053	<2	<0.053	<2	<0.053	<2	<0.019	-
06:52	<2	<0.053	<2	<0.053	<2	<0.053	<2	<0.019	-
06:55	<2	<0.053	<2	<0.053	<2	<0.053	<2	<0.019	-
06:58	<2	<0.053	<2	<0.053	<2	<0.053	<2	<0.019	-
07:01	<2	<0.053	<2	<0.053	<2	<0.053	<2	<0.019	-
07:04	<2	<0.053	<2	<0.053	<2	<0.053	<2	<0.019	-
07:07	<2	<0.053	<2	<0.053	<2	<0.053	<2	<0.019	-
07:10	4	0.07	<2	<0.053	<2	<0.053	<2	<0.019	0.07
07:13	<2	<0.053	<2	<0.053	<2	<0.053	<2	<0.019	-
07:16	<2	<0.053	<2	<0.053	<2	<0.053	<2	<0.019	-
07:19	4	0.07	<2	<0.053	<2	<0.053	<2	<0.019	0.07
07:22	<2	<0.053	<2	<0.053	34	0.21	<2	<0.019	0.21
07:25	<2	<0.053	<2	<0.053	<2	<0.053	<2	<0.019	-
07:28	<2	<0.053	<2	<0.053	<2	<0.053	<2	<0.019	-
07:31	<2	<0.053	<2	<0.053	<2	<0.053	<2	<0.019	-
07:34	<2	<0.053	<2	<0.053	<2	<0.053	<2	<0.019	-
07:37	3	0.07	<2	<0.053	<2	<0.053	<2	<0.019	0.07
07:40	6	0.09	<2	<0.053	<2	<0.053	<2	<0.019	0.09
07:43	<2	<0.053	<2	<0.053	<2	<0.053	2	0.02	0.04
07:46	3	0.07	<2	<0.053	<2	<0.053	<2	<0.019	0.07
07:49	<2	<0.053	<2	<0.053	<2	<0.053	<2	<0.019	-
07:52	<2	<0.053	<2	<0.053	<2	<0.053	<2	<0.019	-
				wind blowing SW					
07:55	<2	<0.053	<2	<0.053	<2	<0.053	<2	<0.019	-
07:58	<2	<0.053	<2	<0.053	<2	<0.053	<2	<0.019	-
08:01	<2	<0.053	<2	<0.053	2	0.06	<2	<0.019	0.06
08:04	<2	<0.053	<2	<0.053	<2	<0.053	<2	<0.019	-
08:07	<2	<0.053	<2	<0.053	<2	<0.053	<2	<0.019	-
Average		**<0.053**		**<0.053**		**<0.053**		**<0.019**	-

CALIBRATION DATA

Number 1

Client: **New Indy**
Location: **Catawba, SC**
Source:

Method **16**

Project Number: **15730.001.006**
Operator: **T. Simpkins**
Date: **22 Mar 2021**

Ambient Temperature: 72°C **Barometric Pressure:** 30.12 in. Hg

Analyte	**H_2S**	**MeSH**	**DMS**	**DMDS**
Perm. Device ID	T-53950	33-56671	89-56661	89-56665
Perm. Rate, nL/min	423	456	307	218
Ret. Time, sec	19.0	32.5	70.0	125.0

1 Flow = **55.0** mL/Min	**7.70** ppm	**8.30** ppm	**5.57** ppm	**3.96** ppm
Time: 07:30		**Peak Areas, mv-sec**		
	36921	39362	26024	72542
	36710	38779	26172	73474
	36242	38902	26190	73390
Average Area	**36624**	**39014**	**26129**	**73135**
2 Flow = **104** mL/Min	**4.06** ppm	**4.37** ppm	**2.94** ppm	**2.09** ppm
Time: 08:01		**Peak Areas, mv-sec**		
	11400	11116	6663	22616
	11123	11403	6907	21518
	11213	11305	6812	21056
Average Area	**11245**	**11275**	**6794**	**21730**
3 Flow = **291** mL/Min	**1.46** ppm	**1.57** ppm	**1.05** ppm	**0.75** ppm
Time: 08:12		**Peak Areas, mv-sec**		
	1408	1530	914	2577
	1343	1487	875	2882
	1360	1474	866	2897
Average Area	**1370**	**1497**	**885**	**2785**

CALIBRATION SUMMARY

Number 1

Client: **New Indy**
Location: **Catawba, SC**
Source:

Method **16**

Project Number: **15730.001.006**
Operator: **T. Simpkins**
Date: **22 Mar 2021**

H_2S	1	2	3		
Time	07:30	08:01	08:12		
Concentration, ppm	7.70	4.06	1.46		
Area, mv-sec	36624	11245	1370		
Calc. Conc., ppm	7.57	4.17	1.44		
% Error	-1.7	2.8	-1.0		
Calibration Curve	Slope	Intercept	Corr. Coeff.	Min. Area	Det. Lim.
	1.9802	2.8229	0.9996	2	0.053

MeSH	1	2	3		
Time	07:30	08:01	08:12		
Concentration, ppm	8.30	4.37	1.57		
Area, mv-sec	39014	11275	1497		
Calc. Conc., ppm	8.28	4.39	1.57		
% Error	-0.2	0.4	-0.2		
Calibration Curve	Slope	Intercept	Corr. Coeff.	Min. Area	Det. Lim.
	1.9584	2.7936	>0.9999	2	0.053

DMS	1	2	3		
Time	07:30	08:01	08:12		
Concentration, ppm	5.57	2.94	1.05		
Area, mv-sec	26129	6794	885		
Calc. Conc., ppm	5.62	2.89	1.06		
% Error	0.9	-1.5	0.6		
Calibration Curve	Slope	Intercept	Corr. Coeff.	Min. Area	Det. Lim.
	2.0280	2.8960	0.9999	2	0.053

DMDS	1	2	3		
Time	07:30	08:01	08:12		
Concentration, ppm	3.96	2.09	0.75		
Area, mv-sec	73135	21730	2785		
Calc. Conc., ppm	3.92	2.12	0.74		
% Error	-0.9	1.4	-0.5		
Calibration Curve	Slope	Intercept	Corr. Coeff.	Min. Area	Det. Lim.
	1.9658	3.6972	0.9999	2	0.019

ANALYTES AND STANDARDS

Client: **New Indy**
Location: **Catawba, SC**
Source:

Method **16**

Project Number: **15730.001.006**
Operator: **T. Simpkins**
Date: **22 Mar 2021**

Analyte	H_2S	MeSH	DMS	DMDS
Molecular Weight	34.08	48.11	62.14	94.20
Retention Time, sec	19.0	32.5	70.0	125.0
Peak Detection Window, sec	3.0	5.0	10.0	10.0
Minimum Peak Area, mv-sec	2	2	2	2
Minimum Peak Height, mv	1	1	1	1
Beginning Peak Width, sec	1.0	1.0	2.0	3.0
Ending Peak Width, sec	2.0	3.0	4.0	5.0
Permeation Device ID	T-53950	33-56671	89-56661	89-56665
Permeation Rate, ng/min	600	913	792	852
Permeation Rate, nL/min*	423	456	307	218

Barometric Pressure: 30.12 in. Hg **Ambient Temperature:** 72 °F
No Oxygen Correction

*Permeation rates are gravimetrically determined by the manufacturer with results by weight in ng/min. Permeation rates by volume, in nL/min, are calculated from the permeation rates by weight as follows:

$$PR_{nl} = PR_{ng} \times (V_{mol} / W_{mol}) \times [(460° + T_a) / T_s] \times (P_s / P_b)$$

Where:

PR_{nl} = Permeation Rate by volume, nL/min
PR_{ng} = Permeation Rate by weight, ng/min
V_{mol} = Molar Volume of any gas @32 °F & 29.92 mm Hg = 22.4 L/mole
W_{mol} = Molecular Weight of compound
T_a = Ambient Temperature, °F
T_s = Standard Temperature = 492°R (32 °F)
P_s = Standard Pressure = 29.92 in Hg
P_b = Barometric Pressure, in Hg

For example, H_2S:

$$PR_{nl} = 600 \times (22.4 / 34.08) \times [(460 + 72) / 492] \times (29.92 / 30.12)$$
$$= 423 \text{ nL/min}$$

To calclate concentrations:

$$C = PR_{nl} / F_d$$

Where:

C = Concentration, ppmv
PR_{nl} = Permeation Rate by volume, nL/min
F_d = Flow rate of diluent, mL/min

INSTRUMENT INFORMATION

Client: **New Indy**
Location: **Catawba, SC**
Source:

Method **16**

Project Number: **15730.001.006**
Operator: **T. Simpkins**
Date: **22 Mar 2021**

File: C:\Data\NIC\Trs Data 23 March 2021.trs
Program Version: 2.0, built 15 May 2017 **File Version:** 2.0
Computer: DESKTOP-A1IJDGT **Trailer:** 88

Analog Input Device: Keithley KUSB-3108 **GC Channel:** 16

Sampling Rate: 0.050 sec. **Data Interval:** 0.5 sec.

Gas Chromatograph: Shimadzu GC8A **Serial No.** GC 1
Detector Range: 10

Gases	Press. psi	Flow mL/min
H_2	30	50
Air	30	60
Carrier	50	30

Temperatures, °C

Column: 100
Detector: 120

Columns

Primary: Carbopack
Secondary: N/A
Sample Loop: 4"

Injection Cycle

Total Length: 180 sec **Sampling Time:** 170 sec **Load/Backflush Time:** 80 sec

Default Integration Parameters

Signal Threshold 0.67 mv **Peak detection window** ±10 sec
Minimum peak area 2 mv-sec **Minimum peak height** 1 mv above baseline

Dynacalibrator

Chamber Temperature 50.0°C
Ambient Temperature 72.0°F
Barometric Pressure 30.12 in. Hg

ATTACHMENT B

24 MARCH 2021

RUN SUMMARY

Number 1

Client:	**New Indy**		Project Number: **15730.001.006**
Location:	**Catawba, SC**	Method **16**	Operator: **T. Simpkins**
Source:		Calibration **1**	Date: **24 Mar 2021**

Start Time 09:31 **End Time** 10:14

Average Measured TRS Conc. 0.10 **ppm**
Recovery Missing

RUN SUMMARY

Number 2

Client:	**New Indy**		Project Number: **15730.001.006**
Location:	**Catawba, SC**	Method **16**	Operator: **T. Simpkins**
Source:		Calibration **1**	Date: **24 Mar 2021**

Start Time 10:17 **End Time** 10:29

Average Measured TRS Conc. 0.00 **ppm**
Recovery Missing

RUN SUMMARY

Number 3

Client:	**New Indy**	Project Number:	**15730.001.006**
Location:	**Catawba, SC**	Method **16**	Operator: **T. Simpkins**
Source:		Calibration **1**	Date: **24 Mar 2021**

Start Time 10:31 **End Time** 10:43

Average Measured TRS Conc. 0.00 **ppm**
Recovery Missing

RUN SUMMARY

Number 4

Client:	**New Indy**	Project Number:	**15730.001.006**
Location:	**Catawba, SC**	Method **16**	Operator: **T. Simpkins**
Source:		Calibration **1**	Date: **24 Mar 2021**

Start Time 10:58 **End Time** 15:40

Average Measured TRS Conc. 0.03 **ppm**
Recovery Missing

RUN DATA

Number 1

Client: **New Indy**
Location: **Catawba, SC**
Source:

Method **16**
Calibration **1**

Project Number: **15730.001.006**
Operator: **T. Simpkins**
Date: **24 Mar 2021**

Time	H_2S		MeSH		DMS		DMDS		TRS
	area	ppm	area	ppm	area	ppm	area	ppm	ppm
09:31	<2	<0.044	579	0.81	<2	<0.052	8	0.04	0.88
09:34	<2	<0.044	67	0.25	<2	<0.052	3	0.02	0.29
09:37	<2	<0.044	<2	<0.038	<2	<0.052	<2	<0.017	-
09:40	<2	<0.044	<2	<0.038	<2	<0.052	<2	<0.017	-
09:43	<2	<0.044	<2	<0.038	<2	<0.052	<2	<0.017	-
09:46	<2	<0.044	<2	<0.038	<2	<0.052	<2	<0.017	-
09:49	<2	<0.044	<2	<0.038	<2	<0.052	2	0.02	0.04
09:52	<2	<0.044	<2	<0.038	<2	<0.052	<2	<0.017	-
09:55	<2	<0.044	<2	<0.038	<2	<0.052	<2	<0.017	-
09:58	<2	<0.044	<2	<0.038	<2	<0.052	6	0.03	0.06
10:01	<2	<0.044	<2	<0.038	<2	<0.052	5	0.03	0.06
10:05	<2	<0.044	<2	<0.038	<2	<0.052	<2	<0.017	-
10:08	3	0.05	<2	<0.038	2	0.06	<2	<0.017	0.11
10:11	<2	<0.044	<2	<0.038	<2	<0.052	<2	<0.017	-
Average		**<0.044**		**0.08**		**<0.052**		**<0.017**	**0.10**

RUN DATA

Number 2

Client: **New Indy**
Location: **Catawba, SC**
Source:

Method **16**
Calibration **1**

Project Number: **15730.001.006**
Operator: **T. Simpkins**
Date: **24 Mar 2021**

Time	H_2S area	H_2S ppm	MeSH area	MeSH ppm	DMS area	DMS ppm	DMDS area	DMDS ppm	TRS ppm
PM Roof Vent - Edge 935-940									
10:17	<2	<0.044	<2	<0.038	<2	<0.052	<2	<0.017	-
10:20	<2	<0.044	<2	<0.038	<2	<0.052	<2	<0.017	-
10:23	<2	<0.044	<2	<0.038	<2	<0.052	<2	<0.017	-
10:26	<2	<0.044	<2	<0.038	<2	<0.052	<2	<0.017	-
Average		**<0.044**		**<0.038**		**<0.052**		**<0.017**	-

RUN DATA

Number 3

Client: **New Indy**
Location: **Catawba, SC**
Source:

Method **16**
Calibration **1**

Project Number: **15730.001.006**
Operator: **T. Simpkins**
Date: **24 Mar 2021**

Time	H_2S		MeSH		DMS		DMDS		TRS
	area	ppm	area	ppm	area	ppm	area	ppm	ppm
PM Roof Vent 2- 955-1000									
10:31	<2	<0.044	<2	<0.038	<2	<0.052	<2	<0.017	-
10:34	<2	<0.044	<2	<0.038	<2	<0.052	<2	<0.017	-
10:37	<2	<0.044	<2	<0.038	<2	<0.052	<2	<0.017	-
10:40	<2	<0.044	<2	<0.038	<2	<0.052	<2	<0.017	-
Average		**<0.044**		**<0.038**		**<0.052**		**<0.017**	**-**

RUN DATA

Number 4

Client: **New Indy**
Location: **Catawba, SC**
Source:

Method **16**
Calibration **1**

Project Number: **15730.001.006**
Operator: **T. Simpkins**
Date: **24 Mar 2021**

Time	H_2S		MeSH		DMS		DMDS		TRS
	area	ppm	area	ppm	area	ppm	area	ppm	ppm
Moving trailer to NW side of mill									
10:58	<2	<0.044	<2	<0.038	<2	<0.052	<2	<0.017	-
sdtv bag 2- 1045-1050									
11:01	<2	<0.044	<2	<0.038	<2	<0.052	<2	<0.017	-
11:04	<2	<0.044	<2	<0.038	<2	<0.052	<2	<0.017	-
sdtv bag done									
11:07	<2	<0.044	<2	<0.038	<2	<0.052	<2	<0.017	-
11:10	<2	<0.044	<2	<0.038	<2	<0.052	<2	<0.017	-
11:13	<2	<0.044	<2	<0.038	<2	<0.052	<2	<0.017	-
11:16	<2	<0.044	<2	<0.038	<2	<0.052	<2	<0.017	-
NW side of ill near old guard shack									
stack plumes going straight up right now									
11:19	<2	<0.044	<2	<0.038	<2	<0.052	<2	<0.017	-
11:22	<2	<0.044	3	0.05	<2	<0.052	<2	<0.017	0.05
11:25	<2	<0.044	<2	<0.038	<2	<0.052	<2	<0.017	-
11:28	<2	<0.044	<2	<0.038	<2	<0.052	<2	<0.017	-
11:31	2	0.05	<2	<0.038	<2	<0.052	<2	<0.017	0.05
11:34	<2	<0.044	<2	<0.038	<2	<0.052	<2	<0.017	-
11:37	<2	<0.044	<2	<0.038	<2	<0.052	<2	<0.017	-
11:40	<2	<0.044	<2	<0.038	<2	<0.052	<2	<0.017	-
11:43	<2	<0.044	<2	<0.038	<2	<0.052	<2	<0.017	-
11:46	<2	<0.044	<2	<0.038	<2	<0.052	<2	<0.017	-
11:49	<2	<0.044	9	0.09	<2	<0.052	2	0.02	0.12
11:52	<2	<0.044	<2	<0.038	<2	<0.052	<2	<0.017	-
11:55	<2	<0.044	<2	<0.038	<2	<0.052	<2	<0.017	-
11:58	<2	<0.044	<2	<0.038	<2	<0.052	<2	<0.017	-
12:01	<2	<0.044	<2	<0.038	<2	<0.052	3	0.02	0.04
12:04	<2	<0.044	<2	<0.038	<2	<0.052	<2	<0.017	-
12:07	<2	<0.044	<2	<0.038	<2	<0.052	<2	<0.017	-
12:10	<2	<0.044	<2	<0.038	<2	<0.052	<2	<0.017	-
12:13	<2	<0.044	<2	<0.038	<2	<0.052	<2	<0.017	-
12:16	3	0.06	<2	<0.038	<2	<0.052	<2	<0.017	0.06
12:19	<2	<0.044	<2	<0.038	<2	<0.052	2	0.02	0.04
12:22	2	0.05	<2	<0.038	<2	<0.052	<2	<0.017	0.05
12:25	<2	<0.044	<2	<0.038	8	0.10	<2	<0.017	0.10
12:28	3	0.06	<2	<0.038	6	0.09	<2	<0.017	0.15
12:31	2	0.05	<2	<0.038	<2	<0.052	<2	<0.017	0.05
12:34	<2	<0.044	<2	<0.038	<2	<0.052	2	0.02	0.04
12:37	<2	<0.044	<2	<0.038	<2	<0.052	<2	<0.017	-
12:40	<2	<0.044	<2	<0.038	<2	<0.052	<2	<0.017	-

RUN DATA

Number 4

Client: **New Indy**
Location: **Catawba, SC**
Source:

Method **16**
Calibration **1**

Project Number: **15730.001.006**
Operator: **T. Simpkins**
Date: **24 Mar 2021**

Time	H_2S		MeSH		DMS		DMDS		TRS
	area	ppm	area	ppm	area	ppm	area	ppm	ppm
12:43	<2	<0.044	<2	<0.038	<2	<0.052	<2	<0.017	-
12:46	<2	<0.044	<2	<0.038	<2	<0.052	<2	<0.017	-
12:49	<2	<0.044	<2	<0.038	<2	<0.052	<2	<0.017	-
in main courtyard of mill next to Wood tent									
NE									
wins going toward									
12:52	<2	<0.044	<2	<0.038	<2	<0.052	<2	<0.017	-
12:55	4	0.06	<2	<0.038	<2	<0.052	3	0.02	0.10
12:58	<2	<0.044	<2	<0.038	<2	<0.052	<2	<0.017	-
13:01	2	0.05	<2	<0.038	<2	<0.052	<2	<0.017	0.05
13:04	<2	<0.044	<2	<0.038	2	0.05	<2	<0.017	0.05
13:07	<2	<0.044	<2	<0.038	5	0.08	<2	<0.017	0.08
13:10	<2	<0.044	<2	<0.038	<2	<0.052	<2	<0.017	-
13:13	4	0.06	<2	<0.038	<2	<0.052	7	0.03	0.12
13:16	<2	<0.044	<2	<0.038	<2	<0.052	<2	<0.017	-
13:19	3	0.05	<2	<0.038	<2	<0.052	<2	<0.017	0.05
13:22	<2	<0.044	<2	<0.038	<2	<0.052	<2	<0.017	-
13:25	<2	<0.044	<2	<0.038	<2	<0.052	<2	<0.017	-
13:28	2	0.05	<2	<0.038	<2	<0.052	<2	<0.017	0.05
13:31	5	0.07	<2	<0.038	27	0.19	<2	<0.017	0.26
13:34	<2	<0.044	<2	<0.038	<2	<0.052	<2	<0.017	-
13:37	<2	<0.044	<2	<0.038	<2	<0.052	4	0.02	0.05
13:40	<2	<0.044	<2	<0.038	<2	<0.052	<2	<0.017	-
13:43	4	0.06	<2	<0.038	<2	<0.052	<2	<0.017	0.06
13:46	7	0.09	<2	<0.038	25	0.19	4	0.02	0.32
13:49	<2	<0.044	<2	<0.038	3	0.06	<2	<0.017	0.06
13:52	<2	<0.044	<2	<0.038	<2	<0.052	<2	<0.017	-
13:55	<2	<0.044	<2	<0.038	<2	<0.052	<2	<0.017	-
13:58	<2	<0.044	<2	<0.038	<2	<0.052	3	0.02	0.04
14:01	2	0.05	<2	<0.038	<2	<0.052	<2	<0.017	0.05
14:04	<2	<0.044	<2	<0.038	<2	<0.052	<2	<0.017	-
14:07	13	0.12	<2	<0.038	<2	<0.052	<2	<0.017	0.12
14:10	<2	<0.044	<2	<0.038	<2	<0.052	<2	<0.017	-
14:13	5	0.07	<2	<0.038	<2	<0.052	<2	<0.017	0.07
14:16	8	0.09	<2	<0.038	<2	<0.052	<2	<0.017	0.09
14:19	<2	<0.044	<2	<0.038	<2	<0.052	<2	<0.017	-
14:22	3	0.05	<2	<0.038	<2	<0.052	<2	<0.017	0.05
14:25	<2	<0.044	<2	<0.038	<2	<0.052	<2	<0.017	-
14:28	<2	<0.044	<2	<0.038	<2	<0.052	<2	<0.017	-
14:31	<2	<0.044	<2	<0.038	<2	<0.052	<2	<0.017	-

RUN DATA

Number 4

Client: **New Indy**
Location: **Catawba, SC**
Source:

Method **16**
Calibration **1**

Project Number: **15730.001.006**
Operator: **T. Simpkins**
Date: **24 Mar 2021**

Time	H_2S		MeSH		DMS		DMDS		TRS
	area	ppm	area	ppm	area	ppm	area	ppm	ppm
14:34	<2	<0.044	<2	<0.038	<2	<0.052	<2	<0.017	-
14:37	<2	<0.044	<2	<0.038	<2	<0.052	<2	<0.017	-
14:40	<2	<0.044	<2	<0.038	<2	<0.052	<2	<0.017	-
14:43	3	0.05	<2	<0.038	<2	<0.052	<2	<0.017	0.05
14:46	2	0.04	<2	<0.038	<2	<0.052	2	0.02	0.08
14:49	<2	<0.044	<2	<0.038	<2	<0.052	<2	<0.017	-
14:52	<2	<0.044	<2	<0.038	<2	<0.052	4	0.02	0.05
14:55	<2	<0.044	<2	<0.038	<2	<0.052	2	0.02	0.04
14:58	<2	<0.044	<2	<0.038	<2	<0.052	<2	<0.017	-
15:01	3	0.05	<2	<0.038	<2	<0.052	2	0.02	0.09
15:04	<2	<0.044	<2	<0.038	<2	<0.052	<2	<0.017	-
15:07	<2	<0.044	<2	<0.038	<2	<0.052	<2	<0.017	-
15:10	4	0.06	<2	<0.038	<2	<0.052	<2	<0.017	0.06
			wind blowing toward NE						
15:13	4	0.06	<2	<0.038	<2	<0.052	<2	<0.017	0.06
15:16	<2	<0.044	<2	<0.038	<2	<0.052	3	0.02	0.05
15:19	<2	<0.044	<2	<0.038	30	0.20	<2	<0.017	0.20
15:22	<2	<0.044	<2	<0.038	<2	<0.052	<2	<0.017	-
15:25	<2	<0.044	<2	<0.038	<2	<0.052	<2	<0.017	-
15:28	<2	<0.044	<2	<0.038	<2	<0.052	<2	<0.017	-
15:31	<2	<0.044	<2	<0.038	<2	<0.052	4	0.02	0.05
15:34	<2	<0.044	<2	<0.038	<2	<0.052	<2	<0.017	-
15:37	<2	<0.044	<2	<0.038	<2	<0.052	<2	<0.017	-
Average		**<0.044**		**<0.038**		**<0.052**		**<0.017**	-

CALIBRATION DATA

Number 1

Client: **New Indy**
Location: **Catawba, SC**
Source:

Method **16**

Project Number: **15730.001.006**
Operator: **T. Simpkins**
Date: **24 Mar 2021**

Ambient Temperature: 72°C **Barometric Pressure:** 30.12 in. Hg

Analyte	**H_2S**	**MeSH**	**DMS**	**DMDS**
Perm. Device ID	T-53950	33-56671	89-56661	89-56665
Perm. Rate, nL/min	423	456	307	218
Ret. Time, sec	19.0	32.5	70.0	125.0

1 Flow = **55.0** mL/Min	**7.70** ppm	**8.30** ppm	**5.57** ppm	**3.96** ppm
Time: 08:25		**Peak Areas, mv-sec**		
	36213	43418	23287	63725
	36413	42776	23331	64081
	36421	43380	23930	65240
Average Area	**36349**	**43191**	**23516**	**64349**
2 Flow = **120** mL/Min	**3.53** ppm	**3.80** ppm	**2.55** ppm	**1.81** ppm
Time: 08:40		**Peak Areas, mv-sec**		
	8717	10940	4796	15534
	9003	11114	4780	14544
	8846	10903	4727	14462
Average Area	**8855**	**10986**	**4768**	**14847**
3 Flow = **331** mL/Min	**1.28** ppm	**1.38** ppm	**0.93** ppm	**0.66** ppm
Time: 08:53		**Peak Areas, mv-sec**		
	1189	1564	654	2164
	1219	1539	643	2101
	1185	1516	632	2063
Average Area	**1198**	**1540**	**643**	**2109**

CALIBRATION SUMMARY

Number 1

Client: **New Indy**
Location: **Catawba, SC**
Source:

Method **16**

Project Number: **15730.001.006**
Operator: **T. Simpkins**
Date: **24 Mar 2021**

H_2S	1	2	3		
Time	08:25	08:40	08:53		
Concentration, ppm	7.70	3.53	1.28		
Area, mv-sec	36349	8855	1198		
Calc. Conc., ppm	7.59	3.62	1.27		
% Error	-1.4	2.5	-1.1		
Calibration Curve	Slope	Intercept	Corr. Coeff.	Min. Area	Det. Lim.
	1.9048	2.8836	0.9997	2	0.044

MeSH	1	2	3		
Time	08:25	08:40	08:53		
Concentration, ppm	8.30	3.80	1.38		
Area, mv-sec	43191	10986	1540		
Calc. Conc., ppm	8.16	3.91	1.36		
% Error	-1.6	2.9	-1.2		
Calibration Curve	Slope	Intercept	Corr. Coeff.	Min. Area	Det. Lim.
	1.8614	2.9379	0.9996	2	0.038

DMS	1	2	3		
Time	08:25	08:40	08:53		
Concentration, ppm	5.57	2.55	0.93		
Area, mv-sec	23516	4768	643		
Calc. Conc., ppm	5.61	2.53	0.93		
% Error	0.6	-1.0	0.5		
Calibration Curve	Slope	Intercept	Corr. Coeff.	Min. Area	Det. Lim.
	2.0039	2.8712	>0.9999	2	0.052

DMDS	1	2	3		
Time	08:25	08:40	08:53		
Concentration, ppm	3.96	1.81	0.66		
Area, mv-sec	64349	14847	2109		
Calc. Conc., ppm	3.94	1.83	0.66		
% Error	-0.4	0.7	-0.3		
Calibration Curve	Slope	Intercept	Corr. Coeff.	Min. Area	Det. Lim.
	1.9051	3.6735	>0.9999	2	0.017

AM

ANALYTES AND STANDARDS

Client: **New Indy**
Location: **Catawba, SC**
Source:

Method **16**

Project Number: **15730.001.006**
Operator: **T. Simpkins**
Date: **24 Mar 2021**

Analyte	H_2S	MeSH	DMS	DMDS
Molecular Weight	34.08	48.11	62.14	94.20
Retention Time, sec	19.0	32.5	70.0	125.0
Peak Detection Window, sec	3.0	5.0	10.0	10.0
Minimum Peak Area, mv-sec	2	2	2	2
Minimum Peak Height, mv	1	1	1	1
Beginning Peak Width, sec	1.0	1.0	2.0	3.0
Ending Peak Width, sec	2.0	3.0	4.0	5.0
Permeation Device ID	T-53950	33-56671	89-56661	89-56665
Permeation Rate, ng/min	600	913	792	852
Permeation Rate, nL/min*	423	456	307	218

Barometric Pressure: 30.12 in. Hg **Ambient Temperature:** 72 °F
No Oxygen Correction

*Permeation rates are gravimetrically determined by the manufacturer with results by weight in ng/min. Permeation rates by volume, in nL/min, are calculated from the permeation rates by weight as follows:

$$PR_{nl} = PR_{ng} \times (V_{mol} / W_{mol}) \times [(460° + T_a) / T_s] \times (P_s / P_b)$$

Where:

PR_{nl} = Permeation Rate by volume, nL/min
PR_{ng} = Permeation Rate by weight, ng/min
V_{mol} = Molar Volume of any gas @32 °F & 29.92 mm Hg = 22.4 L/mole
W_{mol} = Molecular Weight of compound
T_a = Ambient Temperature, °F
T_s = Standard Temperature = 492°R (32 °F)
P_s = Standard Pressure = 29.92 in Hg
P_b = Barometric Pressure, in Hg

For example, H_2S:

$$PR_{nl} = 600 \times (22.4 / 34.08) \times [(460 + 72) / 492] \times (29.92 / 30.12)$$
$$= 423 \text{ nL/min}$$

To calclate concentrations:

$$C = PR_{nl} / F_d$$

Where:

C = Concentration, ppmv
PR_{nl} = Permeation Rate by volume, nL/min
F_d = Flow rate of diluent, mL/min

INSTRUMENT INFORMATION

Client: **New Indy**
Location: **Catawba, SC**
Source:

Method **16**

Project Number: **15730.001.006**
Operator: **T. Simpkins**
Date: **24 Mar 2021**

File: D:\NIC\Trs Data 24 March 2021 B.trs
Program Version: 2.0, built 15 May 2017 **File Version:** 2.0
Computer: DESKTOP-A1IJDGT **Trailer:** 88

Analog Input Device: Keithley KUSB-3108 **GC Channel:** 16

Sampling Rate: 0.050 sec. **Data Interval:** 0.5 sec.

Gas Chromatograph: Shimadzu GC8A **Serial No.** GC 1
Detector Range: 10

Gases	Press. psi	Flow mL/min
H_2	30	50
Air	30	60
Carrier	50	30

Temperatures, °C

Column: 100
Detector: 120

Columns

Primary: Carbopack
Secondary: N/A
Sample Loop: 4"

Injection Cycle

Total Length: 180 sec **Sampling Time:** 170 sec **Load/Backflush Time:** 80 sec

Default Integration Parameters

Signal Threshold 0.67 mv **Peak detection window** ±10 sec
Minimum peak area 2 mv-sec **Minimum peak height** 1 mv above baseline

Dynacalibrator

Chamber Temperature 50.0°C
Ambient Temperature 72.0°F
Barometric Pressure 30.12 in. Hg

ATTACHMENT B

25 MARCH 2021

New Indy Catawba Sample Analysis
Work Order No. 15730.001.006
Analyzed 25 March 2021

Sample	H_2S µg / mL	MeSH µg / mL	DMS µg / mL	DMDS µg / mL	TRS as S µg / mL
Stripper Feed, AX3930	48.8	9.3	11.7	6.1	62.2
Acid Sewer, AX3931	0.13	<0.07	<0.06	0.20	0.26
Clarifier Overflow, AX3932	0.25	<0.1	1.2	0.57	1.24
ASB Effluent, AX3933	0.20	<0.1	<0.08	<0.06	0.18
ASB Influent, AX3934	0.10	<0.06	0.65	0.23	0.58
Screw Press Filtrate, AX3935	0.14	<0.05	<0.04	<0.03	0.13
PM 3 Whitewater, AX3936	0.04	<0.05	0.18	<0.03	0.13

New Indy Catawba Sample Analysis
Work Order No. 15730.001.006
Analyzed 25 March 2021

Sample	Stripper Feed, AX3930
Aliquot, mL	2.5
Purge	
Nitrogen Flow Rate, mL/min	948
Purge Time, min	10.00
Gas Volume in Bag, L	9.480

Analysis	H_2S	MeSH	DMS	DMDS	TRS as S
Conc. in Bag, ppm	9.08	1.23	1.19	0.41	12.32
Mass in Bag, µg	122	23.3	29.2	15.2	155
Conc. in Sample, µg/mL	48.8	9.3	11.7	6.1	62.2

New Indy Catawba Sample Analysis
Work Order No. 15730.001.006
Analyzed 25 March 2021

Sample	Acid Sewer, AX3931
Aliquot, mL	15.0
Purge	
Nitrogen Flow Rate, mL/min	945
Purge Time, min	2.00
Gas Volume in Bag, L	1.890

Analysis	H_2S	MeSH	DMS	DMDS	TRS as S
Conc. in Bag, ppm	0.73	<0.25	<0.16	0.40	1.53
Mass in Bag, µg	2.0 ✓	<0.95 ✓	<0.79 ✓	3.0 ✓	3.8 ✓
Conc. in Sample, µg/mL	0.13 ✓	<0.07 ✓	<0.06 ✓	0.20 ✓	0.26 ✓

✓ wkl

New Indy Catawba Sample Analysis
Work Order No. 15730.001.006
Analyzed 25 March 2021

Sample	Clarifier Overflow, AX3932
Aliquot, mL	10.0
Purge	
Nitrogen Flow Rate, mL/min	987
Purge Time, min	2.00
Gas Volume in Bag, L	1.974

Analysis	H_2S	MeSH	DMS	DMDS	TRS as S
Conc. in Bag, ppm	0.91	<0.25	2.33	0.74	4.72
Mass in Bag, µg	2.55	<1.0	11.9	5.72	12.4
Conc. in Sample, µg/mL	0.25	<0.1	1.2	0.57	1.24

New Indy Catawba Sample Analysis
Work Order No. 15730.001.006
Analyzed 25 March 2021

Sample	ASB Effluent, AX3933
Aliquot, mL	10.0
Purge	
Nitrogen Flow Rate, mL/min	962
Purge Time, min	2.00
Gas Volume in Bag, L	1.924

Analysis	H_2S	MeSH	DMS	DMDS	TRS as S
Conc. in Bag, ppm	0.72	<0.25	<0.16	<0.07	0.72
Mass in Bag, µg	2.0	<1.0	<0.8	<0.53	1.8
Conc. in Sample, µg/mL	0.20	<0.1	<0.08	<0.06	0.18

New Indy Catawba Sample Analysis
Work Order No. 15730.001.006
Analyzed 25 March 2021

Sample	ASB Influent, AX3934
Aliquot, mL	20.0
Purge	
Nitrogen Flow Rate, mL/min	1033
Purge Time, min	2.00
Gas Volume in Bag, L	2.066

Analysis	H_2S	MeSH	DMS	DMDS	TRS as S
Conc. in Bag, ppm	0.66	<0.25	2.43	0.58	4.25
Mass in Bag, µg	1.9 ✓	<1.04 ✓	13.0 ✓	4.7 ✓	11.7 ✓
Conc. in Sample, µg/mL	0.10 ✓	<0.06 ✓	0.65 ✓	0.23 ✓	0.58 ✓

✓ MH

New Indy Catawba Sample Analysis
Work Order No. 15730.001.006
Analyzed 25 March 2021

Sample	Screw Press Filtrate, AX3935
Aliquot, mL	20.0
Purge	
Nitrogen Flow Rate, mL/min	985
Purge Time, min	2.00
Gas Volume in Bag, L	1.970

Analysis	H_2S	MeSH	DMS	DMDS	TRS as S
Conc. in Bag, ppm	0.99	<0.25	<0.16	<0.07	0.99
Mass in Bag, µg	2.8	<1.0	<0.82	<0.55	2.6
Conc. in Sample, µg/mL	0.14	<0.05	<0.04	<0.03	0.13

New Indy Catawba Sample Analysis
Work Order No. 15730.001.006
Analyzed 25 March 2021

Sample	PM 3 Whitewater, AX3936
Aliquot, mL	20.0
Purge	
Nitrogen Flow Rate, mL/min	998
Purge Time, min	2.00
Gas Volume in Bag, L	1.996

Analysis	H_2S	MeSH	DMS	DMDS	TRS as S
Conc. in Bag, ppm	0.27	<0.25	0.71	<0.07	0.98
Mass in Bag, µg	0.76	<1.0	3.7	<0.55	2.6
Conc. in Sample, µg/mL	0.04	<0.05	0.18	<0.03	0.13

✓ NB

RUN DATA

Number 1

Client: **New Indy**
Location: **Catawba, SC**
Source:

Method **16**
Calibration **1**

Project Number:
Operator: **J. Short**
Date: **25 Mar 2021**

Time	H_2S area	H_2S ppm	MeSH area	MeSH ppm	DMS area	DMS ppm	DMDS area	DMDS ppm	TRS ppm
PM3 Whitewater AX3936									
10:49	4	0.23	<2	<0.25	35	0.68	<2	<0.070	0.91
10:52	4	0.23	<2	<0.25	41	0.73	<2	<0.070	0.96
10:55	8	0.34	<2	<0.25	40	0.72	<2	<0.070	1.06
Average		**0.27**		**<0.25**		**0.71**		**<0.070**	**0.98**

WESTON SOLUTIONS

RUN DATA

Number 2

Client: **New Indy**
Location: **Catawba, SC**
Source:

Method **16**
Calibration **1**

Project Number:
Operator: **J. Short**
Date: **25 Mar 2021**

Time	H_2S area	H_2S ppm	MeSH area	MeSH ppm	DMS area	DMS ppm	DMDS area	DMDS ppm	TRS ppm
				Screw Press Filtrate AX3935					
11:29	67	0.97	<2	<0.25	<2	<0.16	<2	<0.070	0.97
11:32	78	1.04	<2	<0.25	<2	<0.16	<2	<0.070	1.04
11:35	69	0.98	<2	<0.25	<2	<0.16	<2	<0.070	0.98
Average		**0.99**		**<0.25**		**<0.16**		**<0.070**	**0.99**

WESTON SOLUTIONS

RUN DATA

Number 3

Client: **New Indy**
Location: **Catawba, SC**
Source:

Method **16**
Calibration **1**

Project Number:
Operator: **J. Short**
Date: **25 Mar 2021**

Time	H_2S		MeSH		DMS		DMDS		TRS
	area	ppm	area	ppm	area	ppm	area	ppm	ppm
				ASB Influent AX3934					
11:45	30	0.65	<2	<0.25	415	2.36	137	0.60	4.22
11:48	30	0.65	<2	<0.25	446	2.45	103	0.52	4.14
11:51	32	0.67	<2	<0.25	453	2.47	148	0.62	4.39
Average		**0.66**		**<0.25**		**2.43**		**0.58**	**4.25**

RUN DATA

Number 6

Client: **New Indy**
Location: **Catawba, SC**
Source:

Method **16**
Calibration **1**

Project Number:
Operator: **J. Short**
Date: **25 Mar 2021**

Time	H_2S area	H_2S ppm	MeSH area	MeSH ppm	DMS area	DMS ppm	DMDS area	DMDS ppm	TRS ppm
ASB Effluent AX3933									
12:54	35	0.70	<2	<0.25	<2	<0.16	<2	<0.070	0.70
12:57	39	0.74	<2	<0.25	<2	<0.16	<2	<0.070	0.74
13:00	37	0.72	<2	<0.25	<2	<0.16	<2	<0.070	0.72
Average		**0.72**		**<0.25**		**<0.16**		**<0.070**	**0.72**

RUN DATA
Number 7

Client: **New Indy**
Location: **Catawba, SC**
Source:

Method **16**
Calibration **1**

Project Number:
Operator: **J. Short**
Date: **25 Mar 2021**

Time	H_2S area	H_2S ppm	MeSH area	MeSH ppm	DMS area	DMS ppm	DMDS area	DMDS ppm	TRS ppm
Clarifier overflow AX3932									
13:03	53	0.86	<2	<0.25	395	2.30	207	0.74	4.65
13:06	65	0.95	<2	<0.25	398	2.32	212	0.75	4.76
13:09	59	0.91	<2	<0.25	415	2.36	200	0.73	4.73
Average		**0.91**		**<0.25**		**2.33**		**0.74**	**4.71**

RUN DATA

Number 8

Client: **New Indy**
Location: **Catawba, SC**
Source:

Method **16**
Calibration **1**

Project Number:
Operator: **J. Short**
Date: **25 Mar 2021**

Time	H_2S area	H_2S ppm	MeSH area	MeSH ppm	DMS area	DMS ppm	DMDS area	DMDS ppm	TRS ppm
				Acid Sewer AX3931					
13:25	39	0.74	<2	<0.25	<2	<0.16	62	0.40	1.54
13:28	37	0.72	<2	<0.25	<2	<0.16	53	0.37	1.46
13:31	37	0.72	<2	<0.25	<2	<0.16	72	0.43	1.58
Average		**0.73**		**<0.25**		**<0.16**		**0.40**	**1.53**

RUN DATA

Number 9

Client: **New Indy**
Location: **Catawba, SC**
Source:

Method **16**
Calibration **1**

Project Number:
Operator: **J. Short**
Date: **25 Mar 2021**

Time	H_2S		MeSH		DMS		DMDS		TRS
	area	ppm	area	ppm	area	ppm	area	ppm	ppm
				Stripper Feed AX3930					
14:10	6015	8.99	50	1.16	115	1.24	63	0.40	12.2
14:13	5820	8.85	58	1.24	91	1.10	64	0.41	12.0
14:16	6579	9.40	63	1.30	113	1.23	68	0.42	12.8
Average		**9.08**		**1.23**		**1.19**		**0.41**	**12.3**

CALIBRATION DATA

Number 1

Client: **New Indy**
Location: **Catawba, SC**
Source:

Method **16**

Project Number:
Operator: **J. Short**
Date: **25 Mar 2021**

Ambient Temperature: 72°C **Barometric Pressure:** 30.04 in. Hg

Analyte	**H_2S**	**MeSH**	**DMS**	**DMDS**
Perm. Device ID	T-53935	33-56672	89-56663	89-53970
Perm. Rate, nL/min	425	439	271	200
Ret. Time, sec	17.0	28.0	60.0	101.5

1 Flow = **30.8** mL/Min	**13.8** ppm	**14.3** ppm	**8.81** ppm	**6.49** ppm
Time: 08:51		**Peak Areas, mv-sec**		
	13428	8757	5211	13721
	14531	9664	5583	14836
	14535	9586	5637	15008
Average Area	**14165**	**9336**	**5477**	**14522**
2 Flow = **62.9** mL/Min	**6.76** ppm	**6.98** ppm	**4.31** ppm	**3.18** ppm
Time: 09:06		**Peak Areas, mv-sec**		
	3408	2165	1413	3808
	3446	2160	1465	3622
	3435	2121	1322	3658
Average Area	**3430**	**2149**	**1400**	**3696**
3 Flow = **118** mL/Min	**3.62** ppm	**3.74** ppm	**2.31** ppm	**1.70** ppm
Time: 09:22		**Peak Areas, mv-sec**		
	967	560	395	1069
	938	573	378	1018
	950	576	395	1055
Average Area	**951**	**570**	**389**	**1047**

WESTON SOLUTIONS

CALIBRATION SUMMARY

Number 1

Client: **New Indy**
Location: **Catawba, SC**
Source:

Method **16**

Project Number:
Operator: **J. Short**
Date: **25 Mar 2021**

H_2S	1	2	3		
Time	08:51	09:06	09:22		
Concentration, ppm	13.8	6.76	3.62		
Area, mv-sec	14165	3430	951		
Calc. Conc., ppm	13.8	6.81	3.60		
% Error	-0.3	0.7	-0.4		
Calibration Curve	Slope	Intercept	Corr. Coeff.	Min. Area	Det. Lim.
	2.0162	1.8561	>0.9999	2	0.17

MeSH	1	2	3		
Time	08:51	09:06	09:22		
Concentration, ppm	14.3	6.98	3.74		
Area, mv-sec	9336	2149	570		
Calc. Conc., ppm	14.2	7.03	3.72		
% Error	-0.3	0.7	-0.4		
Calibration Curve	Slope	Intercept	Corr. Coeff.	Min. Area	Det. Lim.
	2.0875	1.5641	>0.9999	2	0.25

DMS	1	2	3		
Time	08:51	09:06	09:22		
Concentration, ppm	8.81	4.31	2.31		
Area, mv-sec	5477	1400	389		
Calc. Conc., ppm	8.74	4.38	2.29		
% Error	-0.7	1.6	-0.8		
Calibration Curve	Slope	Intercept	Corr. Coeff.	Min. Area	Det. Lim.
	1.9730	1.8806	0.9998	2	0.16

DMDS	1	2	3		
Time	08:51	09:06	09:22		
Concentration, ppm	6.49	3.18	1.70		
Area, mv-sec	14522	3696	1047		
Calc. Conc., ppm	6.46	3.22	1.69		
% Error	-0.5	1.2	-0.6		
Calibration Curve	Slope	Intercept	Corr. Coeff.	Min. Area	Det. Lim.
	1.9629	2.5716	0.9999	2	0.070

WESTON SOLUTIONS

ANALYTES AND STANDARDS

Client: **New Indy**
Location: **Catawba, SC**
Source:

Method **16**

Project Number:
Operator: **J. Short**
Date: **25 Mar 2021**

Analyte	H_2S	MeSH	DMS	DMDS
Molecular Weight	34.08	48.11	62.14	94.20
Retention Time, sec	17.0	28.0	60.0	101.5
Peak Detection Window, sec	5.0	5.0	10.0	10.0
Minimum Peak Area, mv-sec	2	2	2	2
Minimum Peak Height, mv	1	1	1	1
Beginning Peak Width, sec	1.0	1.0	2.0	3.0
Ending Peak Width, sec	2.0	3.0	4.0	5.0
Permeation Device ID	T-53935	33-56672	89-56663	89-53970
Permeation Rate, ng/min	600	876	699	781
Permeation Rate, nL/min*	425	439	271	200

Barometric Pressure: 30.04 in. Hg **Ambient Temperature:** 72 °F
No Oxygen Correction

*Permeation rates are gravimetrically determined by the manufacturer with results by weight in ng/min. Permeation rates by volume, in nL/min, are calculated from the permeation rates by weight as follows:

$$PR_{nl} = PR_{ng} \times (V_{mol} / W_{mol}) \times [(460° + T_a) / T_s] \times (P_s / P_b)$$

Where:

PR_{nl} = Permeation Rate by volume, nL/min
PR_{ng} = Permeation Rate by weight, ng/min
V_{mol} = Molar Volume of any gas @32 °F & 29.92 in. Hg = 22.4 L/mole
W_{mol} = Molecular Weight of compound
T_a = Ambient Temperature, °F
T_s = Standard Temperature = 492°R (32 °F)
P_s = Standard Pressure = 29.92 in. Hg
P_b = Barometric Pressure, in. Hg

For example, H_2S:

$$PR_{nl} = 600 \times (22.4 / 34.08) \times [(460 + 72) / 492] \times (29.92 / 30.04)$$
$$= 425 \text{ nL/min}$$

To calclate concentrations:

$$C = PR_{nl} / F_d$$

Where:

C = Concentration, ppmv
PR_{nl} = Permeation Rate by volume, nL/min
F_d = Flow rate of diluent, mL/min

WESTON SOLUTIONS

INSTRUMENT INFORMATION

Client: **New Indy**
Location: **Catawba, SC**
Source:

Method **16**

Project Number:
Operator: **J. Short**
Date: **25 Mar 2021**

File: J:\Misc\NewIndy\03-25-21.trs
Program Version: 2.0, built 28 Oct 2020 **File Version:** 2.0
Computer: JWS-PROGRAMMING **Trailer:** 221

Analog Input Device: MCC USB-1608G **GC Channel:** 16

Sampling Rate: 0.050 sec. **Data Interval:** 0.5 sec.

Gas Chromatograph: Shimadzu GC-8A **Serial No.** C10493414707
Detector Range: 10

Gases	Press. psi	Flow mL/min
H_2	30	50
Air	30	60
Carrier	50	30

Temperatures, °C

Column: 100
Detector: 120

Columns

Primary: 6'
Secondary: none
Sample Loop: 6"

Injection Cycle

Total Length: 180 sec **Sampling Time:** 160 sec **Load/Backflush Time:** 70 sec

Default Integration Parameters

Signal Threshold 0.67 mv **Peak Detection Window** ±10 sec
Minimum Peak Area 2 mv-sec **Minimum Peak Height** 1 mv above baseline

Dynacalibrator

Chamber Temperature -1.0°C
Ambient Temperature 72.0°F
Barometric Pressure 30.04 in. Hg

WESTON SOLUTIONS

ATTACHMENT C
LABORATORY DATA

ATTACHMENT C

METHANOL

Inter-Office Memorandum

1625 Pumphrey Avenue, Auburn, AL 36832
334.466.5600

TO: Temp Simpkins, Project Manager

cc: File

FROM: Staci Hickman, Laboratory Manager

Date: 23 March 2021

PROJECT: New Indy Catwaba

W.O. NO: 15730.001.006

JOB NO.: 2021-091

SUBJECT: Methanol Analysis Results

ACTION: Analysis of samples received on 20 March 2021

NELAC Accreditation ID: 03024

NARRATIVE:

This letter with analytical results constitutes our report for the analysis of the condensate samples collected by New Indy personnel and submitted to the laboratory on 20 March 2021 for methanol analysis. The samples arrived in accordance with the Chain-of-Custody. The samples were prepared and analyzed on 22 March 2021 according to NCASI Method DI/MeOH-94.03.

Enclosed is a copy of the Chain-of-Custody record, acknowledging receipt of these samples. Please note that any unused portion of the samples will be discarded 90 days after the date of receipt.

The results of this report relate only to the samples listed in the body of this report.

This report shall not be reproduced by any organization outside of Weston Solutions, Inc. in part or in full, without the written approval from Weston Solutions, Inc.

These results meet all requirements of TNI, unless otherwise specified.

QUALITY ASSURANCE AND QUALITY CONTROL:

Quality control procedures conformed to the requirements of the referenced method and our quality assurance program.

All quality control results associated with this sample set were within acceptable limits and/or do not adversely affect the reported results. The quality control analysis results as well as the acceptance criteria are shown in the Quality Control section.

We appreciate the opportunity to work with you in performing this analysis. If we can be of any other assistance, please contact me at (334) 466-5683.

Attachments

Analysis Report

NCASI DI/MeOH 94.03

Analytical Laboratory
1625 Pumphrey Ave, Auburn AL 36832
334-466-5600

Client : New Indy Catwaba
Proposal # : 15730.001.006
WESTON Lab Job # : 2021-091
Dates Received : 20-Mar-21

Instrument ID: GC/FID-Lil Red
Analyst: SH
Date(s) Prepped: 3/22/2021
Date (s) Analyzed: 3/22/2021

Limit of Quantification for Methanol (µg/mL): 1.15

Source ID	Date Collected	Lab ID	**Sample Methanol Concentration (µg/mL)**
#3 Foul Condensate	3/17/2021	AX 3919	**7170**
#3 Combined Condensate	3/17/2021	AX 3920	**1210**
#2 Foul Condensate	3/17/2021	AX 3921	**2320**
#2 Combined Condensate	3/17/2021	AX 3922	**188**
#2 Condenser Condensate	3/17/2021	AX 3923	**1590**
#1 Old Condensate	3/17/2021	AX 3924	**1340**
#1 Foul Condensate	3/17/2021	AX 3925	**688**
#1 Combined Condensate	3/17/2021	AX 3926	**103**
#1 Auxillary Condensate	3/17/2021	AX 3927	**2510**
M52-0453 Combined Condensate	3/17/2021	AX 3928	**539**
M52-0432 HVLC Condensate	3/17/2021	AX 3929	**160**
Stripper Feed Tank	3/17/2021	AX 3930	**1860**
Acid Sewer	3/17/2021	AX 3931	**43.8**
Clarifying Overflow	3/17/2021	AX 3932	**185**
ASB Effluent	3/18/2021	AX 3933	**49.4**
ASB Influent	3/18/2021	AX 3934	**117**
Screw Press Filtrate	3/18/2021	AX 3935	**54.1**
PM3 Whitewater	3/18/2021	AX 3936	**14.5**

Some samples were diluted 1:5 to reduce potential interferences.

Staci Hickman

Staci Hickman, Laboratory Manager
Printed: 3/23/2021

Quality Control Report

NCASI DI/MeOH 94.03

Analytical Laboratory
1625 Pumphrey Ave. Auburn AL 36832
334-466-5600

Client: New Indy Catawba WESTON Lab Job # 2021-091 WESTON W.O. # 15730.001.006

Table 1.1

Calibration Curve Verification Standards

Analysis Date	Laboratory ID	Methanol		
		Actual Value (µg/mL)	Calculated Value (µg/mL)	Difference (%)
3/22/2021	9339-42-07	46.1	46.1	0.1%
3/22/2021	9339-42-05	576	578	0.4%
3/22/2021	LCS 5459400	2008	2008	0.0%
3/22/2021	9339-42-05	576	559	2.9%
3/22/2021	9339-42-05	576	547	5.0%
3/22/2021	9339-42-03	2303	2418	5.0%

Table 1.2

Replicate Analysis

Analysis Date	Laboratory ID	Methanol		
		Original Value (µg/mL)	Replicate Value (µg/mL)	Difference (%)
3/22/2021	AX 3919	7165	7598	2.9%
3/22/2021	AX 3929	160	160	0.0%

Table 1.3

Duplicate Analysis

Analysis Date	Laboratory ID	Methanol		
		Original Value (µg/mL)	Duplicate Value (µg/mL)	Difference (%)
3/22/2021	AX 3920	1207	1217	0.4%
3/22/2021	AX 3930	1859	1847	0.3%

Table 1.4

Spike Analysis

Analysis Date	Laboratory ID	Methanol				
		Original Value (µg/mL)	Spiked Value (µg/mL)	Recovered Amount (µg/mL)	Spiked Amount (µg/mL)	Recovery (%)
3/22/2021	AX 3920	1207	2728	1521	1582	96%
3/22/2021	AX 3930	372	2825	2453	2373	103%

- Note- For QC purposes the actual analytical result rather than the LOQ was used when the analytical result was less than the LOQ.
- Consequently, certain differences in actual and calculated values may be skewed.

Calculations:

- Standard % Difference = ((|(Actual Value-Calculated Value)|)÷(Actual Amount))*100.
- Replicate/Duplicate % Difference = ((|Average Value - Original Value|) ÷ (Average Value))*100.
- Spike % Recovery = (Recovered Amount) ÷ (Spiked Amount) * 100.

Acceptance Cirteria:

-The CCV Acceptance Criterion is ± 10 % for Methanol.

-The LCS Acceptance Criterion is ± 15 percent for methanol.

-The Replicate and Duplicate Percent Difference Acceptance Criterion is ± 10 percent.

-The Spike Recovery Acceptance Criterion is 100 percent ± 30 percent.

Lot #s:

Spike Lot # Neat - 145647

Internal Lot # 9339-39-00

Stacı Hickman

Stacı Hickman, Laboratory Manager
Printed: 3/23/2021

15730.001.006
New Indy Catawba
Operations

Lab Tracking Number

Chain-of-Custody Record/Lab Work Request

WESTON SOLUTIONS

Page ___ of ___

Client	New Indy, Catwaba, SC		
Work Order Number	15730.001.006 ~~15730001.01~~ (SH)	**Phone Number**	334-728-0127
Contact Person	Templeton Simpkins	**Turn Around Time**	

Lab ID	Field Sample ID	Sample Collection Date	Analyses Requested/Other Info: M2074 Analysis NEASI 94.03				Sample Check-off
AX 3919	NI-#3FoulCondensate	3/17/2021	X				
3920	NI-#3CombinedCondensate	3/17/2021	X				
3921	NI-#2FoulCondensate	3/17/2021	X				
3922	NI-#2CombinedCondensate	3/17/2021	X				
3923	NI-#2CondenserCondensate	3/17/2021	X				
3924	NI-#1OldCondensate	3/17/2021	X				
3925	NI-#1FoulCondensate	3/17/2021	X				
3926	NI-#1CombinedCondensate	3/17/2021	X				
3927	NI-#1AuxillaryCondensate	3/17/2021	X				
3928	NI-M52-0453CombinedCondensate	3/17/2021	X				
3929	NI-M52-0432HVLCCondensate	3/17/2021	X				
3930	NI-StripperFeedTank	3/17/2021	X				
3931	NI-AcidSewer	3/17/2021	X				
3932	NI-ClarifyingOverflow	3/17/2021	X				
3933	NI-ASBEffluent	3/18/2021	X				
3934	NI-ASBInfluent	3/18/2021	X				
3935	NI-ScrewPressFiltrate	3/18/2021	X				
3936	NI-PM3Whitewater	3/18/2021	X				

Notes:

LAB JOB NO: 2021-091
SAMPLE TEMP: 5.4°C

Relinquished By	Received By	Date	Time
Templeton Simpkins	Stacy Hickman	3/20/21	14:00

Lab Use Only	
Shipper	Air Bill #
Opened By	Date/Time
Temp °C	Condition
Custody Seals: Yes No None N/A	

Laboratory Comments:

ATTACHMENT C

TERPENES

Inter-Office Memorandum

1625 Pumphrey Avenue, Auburn, AL 36832
334.466.5600

TO: Temp Simpkins, Project Manager

FROM: Staci Hickman, Laboratory Manager

Date: 12 April 2021

PROJECT: New Indy Catwaba

W.O. NO: 15370.001.006

JOB NO.: 2021-094

SUBJECT: Terpene Analysis Results

ACTION: Analysis of samples received on 20 March 2021

NARRATIVE:

This memo with analytical results constitutes our report for the condensate samples submitted to the laboratory for terpene analysis. The samples arrived in accordance with the Chain-of-Custody. The samples were prepared on 22 March 2021 and analyzed on 23 March through 24 March 2021 per NIOSH Method 1552. Each sample was analyzed for α-pinene, ß-pinene and total terpenoids. The unidentified terpenoid amount was determined using the response factor for α-pinene to quantify individual terpenoid peaks and adding the combined concentrations to determine total unidentified terpenoid concentration.

Enclosed is a copy of the Chain-of-Custody record, acknowledging receipt of the samples. Please note that any unused portion of the sample will be discarded 90 days after the date of receipt.

These results of this report relate only to the samples listed in the body of this report.

This report shall not be reproduced by any organization outside of Weston Solutions, Inc. in part or in full, without the written approval from Weston Solutions, Inc.

This analysis is outside the scope of our TNI accreditation.

QUALITY ASSURANCE AND QUALITY CONTROL:

Quality control procedures conformed to the requirements of NIOSH 1552 modified for condensate terpenes and our quality assurance program. All samples were analyzed in replicate. The replicates had differences of 3.5% or less for α and ß-pinene, and 4.9% or less for the unidentified terpenoids.

All quality control results associated with this sample set were within acceptable limits and/or do not adversely affect the reported results. The quality control analysis results as well as the acceptance criteria are shown in the following tables of the Quality Control Report.

We appreciate the opportunity to work with you in performing these analyses. If we can be of any other assistance, please contact me at (334) 466-5683.

Sincerely,

WESTON SOLUTIONS

Staci Hickman

Staci Hickman
Laboratory Manager

Analytical Laboratory
1625 Pumphrey Ave. Auburn, AL 36832
334 466 5600

Analysis Report

a-Pinene, b-Pinene, & Total Terpenoids
per NIOSH Method 1552.

Client : New Indy Catwaba
WESTON W.O. # : 15370.001.006

Lab Job #: 2021-094

Date Received : 3/20/2021
Date Prepared : 3/22/2021

Instrument ID: GC/FID-Green Machine
Analyst: SH
Date(s) Analyzed: 3/23/2021-3/24/2021

Limit of Quantification for a-pinene(µg/mL): 0.69 µg/mL

Limit of Quantification for ß-pinene(µg/mL) 0.69 µg/mL

Source ID	Date Collected	Sample Volume (mL)	Dilution	Sample ID	Analyzed a-Pinene (µg/mL)	Analyzed ß-Pinene (µg/mL)	Total Terpenoids (µg/mL)	Analyzed Other Terpenoids (µg/mL)
#3 Foul Condensate	3/17/2021	43	1	AX 3937	3430	1308	6011	1274
#3 Combined Condensate	3/17/2021	43	1	AX 3938	25.8	11.2	229	192
#2 Foul Condensate	3/17/2021	43	1	AX 3939	1.57	0.88	196	194
#2 Combined Condensate	3/17/2021	43	1	AX 3940	<0.69	<0.69	127	127
#2 Condenser Condensate	3/17/2021	43	1	AX 3941	205	79.4	516	232
#1 Old Condensate	3/17/2021	43	1	AX 3942	76.2	35.4	265	154
#1 Foul Condensate	3/17/2021	43	1	AX 3943	2.67	1.25	132	128
#1 Combined Condensate	3/17/2021	43	1	AX 3944	<0.69	<0.69	142	142
#1 Auxillary Condensate	3/17/2021	43	1	AX 3945	113	53.8	422	255
M52-0453 Combined Condensat	3/17/2021	43	1	AX 3946	4.85	2.40	166	159
M52-0432 HVLC Condensate	3/17/2021	43	1	AX 3947	1.79	1.11	62.0	59.1
Stripper Feed Tank	3/17/2021	43	1	AX 3948	1309	512	2396	575
Acid Sewer	3/17/2021	43	1	AX 3949	2.85	1.28	29.1	25.0

Staci Hickman

Staci Hickman, Laboratory Manager

15730.001.006
New-Indy Catawba
Odor Testing

K:\CHEM_LAB\Methods-All\GC_Analysis\VOC\PRCSLIQD\OTHER\TERPENES\2021\2021-094_NewIndy_Terps

Printed on: 4/12/2021

Analytical Laboratory
1625 Pumphrey Ave. Auburn, AL 36832
334.466.5600

Quality Control Report

15370.001.006
New Indy Catawba
a-Pinene & b-Pinene
Other Testing
per NIOSH Method 1552

Client: New Indy Catawba | Weston Job #: 2021-094 | Weston WO#: 15370.001.006

Table 1.1
Continuing Calibration Curve Verification Standards

Analysis Date	Laboratory ID	α-Pinene			ß-Pinene		
		Actual Value (µg/mL)	Calculated Value (µg/mL)	Difference (%)	Actual Value (µg/mL)	Calculated Value (µg/mL)	Difference (%)
3/23/2021	9339-48-06	2.74	2.75	0.4%	2.76	2.77	0.4%
3/23/2021	9339-48-03	686	633	7.7%	689	634	8.0%
3/23/2021	LCS 9339-47-00	945	970	2.7%	923	914	1.0%
3/24/2021	9339-48-05	34.3	30.2	12%	34.5	30.7	11%
3/24/2021	9339-48-04	68.6	62.8	8.5%	68.9	63.1	8.4%
3/24/2021	9339-48-01	3428	3649	6.5%	3446	3702	7.4%
3/24/2021	9339-48-03	686	639	6.9%	689	641	6.9%

Table 1.2
Duplicate Analysis

Analysis Date	Laboratory ID	α-Pinene			ß-Pinene		
		Original Value (µg/mL)	Duplicate Value (µg/mL)	Difference (%)	Original Value (µg/mL)	Duplicate Value (µg/mL)	Difference (%)
3/23/2021	AX 3938	25.8	26.2	0.8%	11.2	11.5	1.1%
3/24/2021	AX 3948	1309	1341	1.2%	512	524	1.1%

Table 1.3
Spike Analysis

Analysis Date	Laboratory ID	α-Pinene					ß-Pinene				
		Original Value (µg/mL)	Spiked Value (µg/mL)	Recovered Amount (µg/mL)	Spiked Amount (µg/mL)	Recovery (%)	Original Value (µg/mL)	Spiked Value (µg/mL)	Recovered Amount (µg/mL)	Spiked Amount (µg/mL)	Recovery (%)
3/23/2021	AX 3938	25.8	94.7	68.9	68.6	100%	11.2	83.6	72.3	68.9	105%
3/24/2021	AX 3948	1341	1400	58.8	68.6	86%	512	589	76.3	68.9	111%

- Note the actual analytical result rather than the LOQ was used when the analytical result was less than the LOQ.
- Consequently, certain differences in actual and calculated values may be skewed.

Calculations:

- Standard % Difference = ((|(Actual Value-Calculated Value)|)÷(Actual Amount))*100.
- Duplicate %t Difference = ((|(Original Value + Duplicate Value) ÷ 2 - Original Value|) ÷ (Average Value))*100.
- Spike % Recovery = (Recovered Amount) ÷ (Spiked Amount) * 100.

Acceptance Cirteria:

- The CCV Acceptance Criterion is ± 15 percent.
- The LCS Acceptance Criterion is ± 15 percent.
- The Duplicate Percent Difference Acceptance Criterion is ± 10 percent.
- The Spike Recovery Acceptance Criterion is 100 percent ± 30 percent.

Staci Hickman

Staci Hickman, Laboratory Manager

Lab Tracking Number

Chain-of-Custody Record/Lab Work Request

15730.001.006
New Indy Catawba
Operation

WESTON SOLUTIONS

Page ____ of ____

Client	New Indy, Catwaba, SC		
Work Order Number 15730.001.006	~~15730001.01~~ (SH)	**Phone Number**	334-728-0127
Contact Person	Templeton Simpkins	**Turn Around Time**	

Lab ID	Field Sample ID	Sample Collection Date	Analyses Requested/Other Info: Terpenes Analysis NIOSH 1551				Sample Check-off
Ax 3937	NI-#3FoulCondensate	3/17/2021	X				
3938	NI-#3CombinedCondensate	3/17/2021	X				
3939	NI-#2FoulCondensate	3/17/2021	X				
3940	NI-#2CombinedCondensate	3/17/2021	X				
3941	NI-#2CondenserCondensate	3/17/2021	X				
3942	NI-#1OldCondensate	3/17/2021	X				
3943	NI-#1FoulCondensate	3/17/2021	X				
3944	NI-#1CombinedCondensate	3/17/2021	X				
3945	NI-#1AuxillaryCondensate	3/17/2021	X				
3946	NI-M52-0453CombinedCondensate	3/17/2021	X				
3947	NI-M52-0432HVLCCondensate	3/17/2021	X				
3948	NI-StripperFeedTank	3/17/2021	X				
3949	NI-AcidSewer	3/17/2021	X				
	NI-ClarifyingOverflow	3/17/2021					
	NI-ASBEffluent	3/18/2021					
	NI-ASBInfluent	3/18/2021					
	NI-ScrewPressFiltrate	3/18/2021					
	NI-PM3Whitewater	3/18/2021					
Notes:	NI-ASBEffluent	3/18/2021					

LAB JOB NO: 2021-094
SAMPLE TEMP: 5.4°C

Relinquished By	Received By	Date	Time	Lab Use Only	
[signature]	Stacy Hickman	3/20/21	14:00	Shipper	Air Bill #
				Opened By	Date/Time
				Temp °C	Condition
				Custody Seals: Yes No None N/A	

Laboratory Comments:

ATTACHMENT D
QUALITY CONTROL DATA

ATTACHMENT D

AUDIT CYLINDER CERTIFICATE

Airgas
an Air Liquide company

Airgas Specialty Gases
Airgas USA, LLC
630 United Drive
Durham, NC 27713
Airgas.com

15730.001.006
New-Indy Catawba
Odor Testing

CERTIFICATE OF ANALYSIS
Grade of Product: EPA Protocol

Part Number:	E02AI99E15A00U0	Reference Number:	122-401930615-1
Cylinder Number:	CC507346	Cylinder Volume:	146.2 CF
Laboratory:	124 - Durham (SAP) - NC	Cylinder Pressure:	2015 PSIG
PGVP Number:	B22020	Valve Outlet:	330
Gas Code:	H2S,O2,BALN	Certification Date:	Oct 21, 2020

Expiration Date: Oct 21, 2023

Certification performed in accordance with "EPA Traceability Protocol for Assay and Certification of Gaseous Calibration Standards (May 2012)" document EPA 600/R-12/531, using the assay procedures listed. Analytical Methodology does not require correction for analytical interference. This cylinder has a total analytical uncertainty as stated below with a confidence level of 95%. There are no significant impurities which affect the use of this calibration mixture. All concentrations are on a mole/mole basis unless otherwise noted.

Do Not Use This Cylinder below 100 psig, i.e. 0.7 megapascals.

ANALYTICAL RESULTS

Component	Requested Concentration	Actual Concentration	Protocol Method	Total Relative Uncertainty	Assay Dates
HYDROGEN SULFIDE	7.000 PPM	7.427 PPM	G1	+/- 0.9% NIST Traceable	10/14/2020, 10/21/2020
AIR	Balance				

CALIBRATION STANDARDS

Type	Lot ID	Cylinder No	Concentration	Uncertainty	Expiration Date
GMIS	122401645168101	CC163645	10.10 PPM HYDROGEN SULFIDE/NITROGEN	+/- 0.80	Jan 23, 2023
RGM	12332	CC183693	10.07 PPM HYDROGEN SULFIDE/NITROGEN	+/- 0.8%	Dec 18, 2017

The SRM, PRM or RGM noted above is only in reference to the GMIS used in the assay and not part of the analysis.

ANALYTICAL EQUIPMENT

Instrument/Make/Model	Analytical Principle	Last Multipoint Calibration
Applied Analytics OMA-406 AA210266	Ultraviolet	Oct 16, 2020

Triad Data Available Upon Request

Signature on file
Approved for Release

RUN DATA

Number 2

Client: **New Indy**
Location: **Catawba, SC**
Source:

Method **16**
Calibration **1**

Project Number: **15730.001.006**
Operator: **T. Simpkins**
Date: **17 Mar 2021**

Time	H_2S area	H_2S ppm	MeSH area	MeSH ppm	DMS area	DMS ppm	DMDS area	DMDS ppm	TRS ppm
16:32	32304	7.89	<2	<0.024	<2	<0.030	<2	<0.008	7.89
16:33	33396	8.04	<2	<0.024	<2	<0.030	<2	<0.008	8.04
Average		**7.96**		**<0.024**		**<0.030**		**<0.008**	**7.96**

RUN DATA

RUN DATA

Number 1

Client: **New Indy**
Location: **Catawba, SC**
Source:

Method **16**
Calibration **1**

Project Number: **15730.001.006**
Operator: **T. Simpkins**
Date: **18 Mar 2021**

Time	H_2S area	H_2S ppm	MeSH area	MeSH ppm	DMS area	DMS ppm	DMDS area	DMDS ppm	TRS ppm
09:36	36240	7.66	<2	<0.030	<2	<0.049	<2	<0.015	7.66
09:39	36179	7.65	<2	<0.030	<2	<0.049	<2	<0.015	7.65
Average		**7.65**		**<0.030**		**<0.049**		**<0.015**	**7.65**

RUN DATA

Number 1

Client: **New Indy**
Location: **Catawba, SC**
Source:

Method **16**
Calibration **1**

Project Number: **15730.001.006**
Operator: **T. Simpkins**
Date: **23 Mar 2021**

Time	H_2S		MeSH		DMS		DMDS		TRS
	area	ppm	area	ppm	area	ppm	area	ppm	ppm
08:42	36227	7.53	<2	<0.053	<2	<0.053	<2	<0.019	7.53
08:45	36413	7.55	<2	<0.053	<2	<0.053	<2	<0.019	7.55
Average		**7.54**		**<0.053**		**<0.053**		**<0.019**	**7.54**

RUN DATA

Number 0

Client: **New Indy**
Location: **Catawba, SC**
Source:

Method **16**
Calibration **1**

Project Number: **15730.001.006**
Operator: **T. Simpkins**
Date: **24 Mar 2021**

Time	H_2S		MeSH		DMS		DMDS		TRS
	area	ppm	area	ppm	area	ppm	area	ppm	ppm
09:13	33726	7.30	<2	<0.038	<2	<0.052	<2	<0.017	7.30
09:16	33952	7.32	<2	<0.038	<2	<0.052	<2	<0.017	7.32
09:19	34010	7.33	<2	<0.038	<2	<0.052	<2	<0.017	7.33
09:22	33998	7.33	<2	<0.038	<2	<0.052	<2	<0.017	7.33
Average		**7.32**		**<0.038**		**<0.052**		**<0.017**	**7.32**

ATTACHMENT D

PROJECT TEAM QUALIFICATIONS

Weston Solutions, Inc. Integrated Air Services Employee Qualifications

Name	Title/Position	Education/Training	QSTI	Years of Experience	
				Total	Emission Testing
Bryant, Ashley	Report Coordinator	BS - English Ed. - Jacksonville State University (2011) MA - English - Jacksonville State University (2012)	QSTI 1	8	8
Hammonds, Natalie	Quality Manager	BS - Environmental Science Auburn University (1998)	QSTI 1	23	18
Hartsky, Chris	Emission Testing Specialist	BA - Environmental Studies Washington College (2016)		10	5
Short, Jack	CEMS Operator	BS - Biology - Auburn University (1973) MS - Botany - Auburn University (1978)	QSTI 1, 2 & 3	32	32
Simpkins, Templeton	Project Manager	BS - Zoology Auburn University (1997)	QSTI 1 & 3	20	20

END OF DOCUMENT

APPENDIX C - ONSITE AMBIENT MONITOR LOCATIONS MAP

Ambient Monitoring Stations: Current "Fence Line" Locations

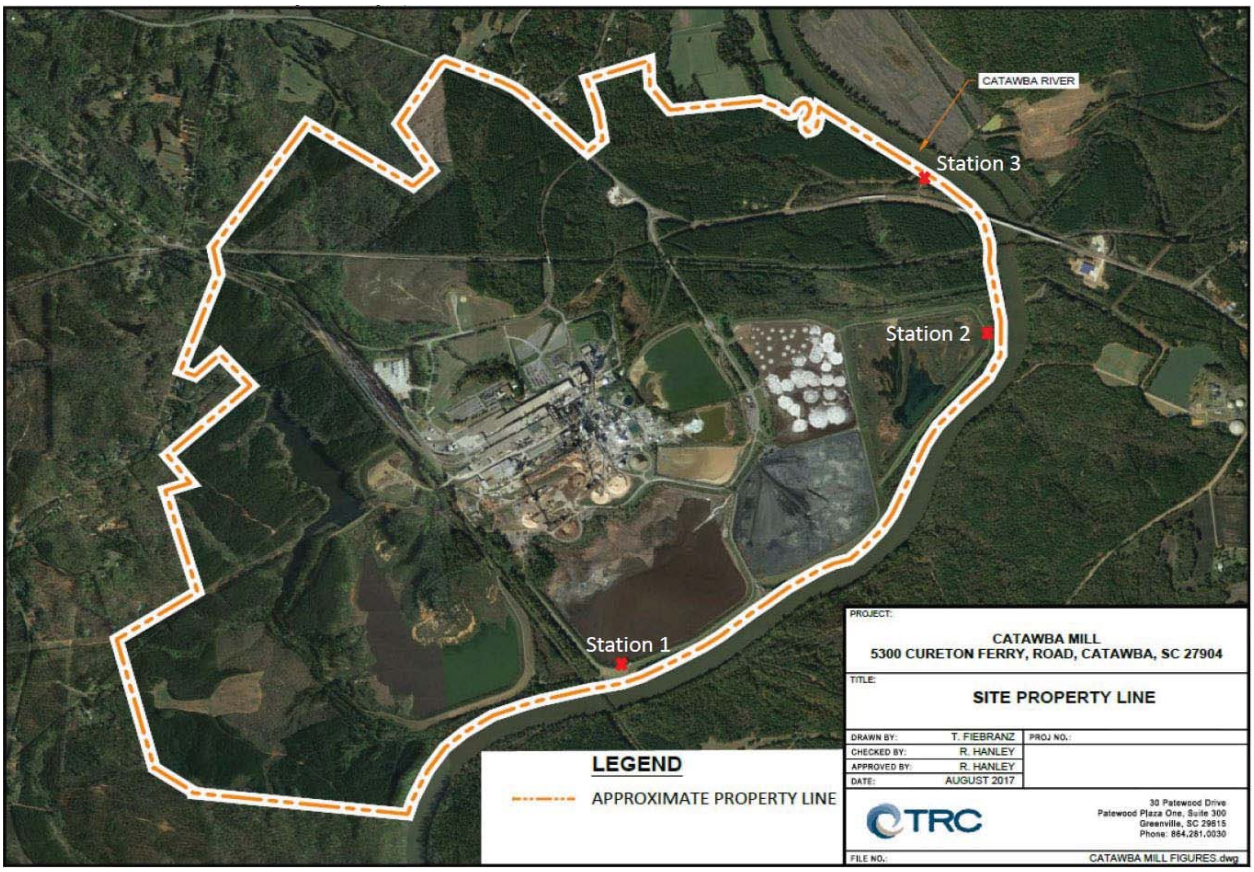

APPENDIX D - ONSITE AMBIENT MONITOR DATA

Ambient H2S Monitoring Data

Initial Onsite Locations

Date	Avg ppb Station 1 Ballfield	Avg ppb Station 2 On ASB	Avg ppb Station 3 Hwy 5	Avg mph Wind Speed	Avg Degrees Wind Direction
4/11/2021	0.32	12.39		5.8	246
4/12/2021	0.31	144.94		4.0	251
4/13/2021	5.11	156.51		2.2	179
4/14/2021	34.19	173.81		3.7	212
4/15/2021	0.34	27.72		4.1	271
4/16/2021	0.21	95.11		2.6	228
4/17/2021	4.37	125.68		2.4	179
4/18/2021	4.02	102.93		2.3	187
4/19/2021	17.33	184.62		3.1	198
4/20/2021	33.27	104.17		4.2	183
4/21/2021	0.15	54.07		5.7	240
4/22/2021	0.05	103.79		3.4	240
4/23/2021	3.92	108.33		2.4	184
4/24/2021	67.82	331.94		3.5	182
4/25/2021	0.21	60.84		3.6	220
4/26/2021	2.81	221.37		2.2	194
4/27/2021	0.19	183.69		3.6	221
4/28/2021	0.10	35.27		3.6	212
4/29/2021	0.25	26.29	22.50	5.6	216
4/30/2021	0.15	11.45	1.23	5.2	270
5/1/2021	1.86	107.38	2.05	2.6	196
5/2/2021	0.29	96.91	26.33	3.5	220
5/3/2021	0.24	45.56	34.45	5.0	201
5/4/2021	0.94	28.56	16.30	4.0	219
5/5/2021	0.64	11.59	7.09	5.5	243
5/6/2021	1.43	27.76	0.90	2.6	210
5/7/2021	1.21	26.13	0.91	4.4	265
5/8/2021	0.24	77.80	17.44	4.0	250
5/9/2021	3.34	78.47	16.56	4.1	194
5/10/2021	0.35	23.26	28.98	4.0	232
5/11/2021	0.42	40.98	1.05	2.9	108
5/12/2021	0.19	66.02	0.90	3.1	138
5/13/2021	0.14	45.97	0.59	2.8	165
5/14/2021	1.37	25.91	0.61	2.0	174
5/15/2021	1.45	56.35	2.03	1.9	181
5/16/2021	13.63	58.78	19.16	2.6	235
5/17/2021	0.98	60.80	0.86	1.9	154
5/18/2021	3.87	27.48	0.65	1.9	151
5/19/2021	1.26	18.11	0.58	2.8	168
5/20/2021	3.63	39.48	0.62	2.7	170
5/21/2021	0.84	19.84	0.59	2.8	155
5/22/2021	2.97	45.42	2.33	1.6	208
5/23/2021	0.53	91.53	2.98	2.4	201
5/24/2021	1.74	83.63	2.32	2.0	186

Ambient H2S Monitoring **Current Fence Line Data**

	Station 1			Station 2			Station 3		
Date	H2S Avg ppb	Wind Speed mph	Wind Direction degrees (from)	H2S Avg ppb	Wind Speed mph	Wind Direction degrees (from)	H2S Avg ppb	Wind Speed mph	Wind Direction degrees (from)
05 / 26 / 2021				44.10			1.31		
05 / 27 / 2021	18.09	24.9	227	18.40			11.30		
05 / 28 / 2021	53.54	7.5	223	7.48			7.00		
05 / 29 / 2021	20.94	8.4	223	8.15			19.22		
05 / 30 / 2021	235.80	12.8	90	1.29			0.20		
05 / 31 / 2021	176.90	5.4	144	0.20			0.48		
06 / 01 / 2021	53.09	2.5	156	1.20			1.23		
06 / 02 / 2021	67.27	2.2	174	6.51			6.88		
06 / 03 / 2021	90.40	2.4	148	0.24			0.63		
06 / 04 / 2021	184.20	4.2	169	0.31	1.0	198	2.15	0.4	191
06 / 05 / 2021	171.70	3.1	210	3.96	1.1		2.44	0.4	202
06 / 06 / 2021	7.46	3.0	163	0.90	0.6	165	3.10	0.5	170
06 / 07 / 2021	1.20	3.4	179	0.62	1.0	179	2.06	0.8	173
06 / 08 / 2021	0.91	2.3	187	2.11	0.6	164	11.26	0.2	159
06 / 09 / 2021	1.53	4.0	190	1.36	1.4	198	9.80	0.8	195
06 / 10 / 2021	35.31	4.6	201	5.93	2.2	212	16.17	0.4	191
06 / 11 / 2021	40.82	4.5	200	9.37	1.9	204	24.56	0.9	189
06 / 12 / 2021	89.90	4.5	210	10.82	2.3	199	20.21	1.0	205
06 / 13 / 2021	186.80	4.0	159	10.43	0.9	181	7.21	0.4	199
06 / 14 / 2021	300.70	5.7	85	0.27	0.7	144	8.04	0.7	149

APPENDIX E - ENVIRONMENTAL BUSINESS SOLUTIONS WASTEWATER TREATMENT SYSTEM REPORTS

New Indy - Catawba Wastewater Service Report

Tuesday, May 11, 2021

Today's Visit

Tuesday, May 11, 2021

	Inlet	ASB Mid	ASB Effluent	Holding Pond Effluent
pH	9.51	8.11	7.66	8.01
Temp. (°C)	44.0	33.1	31.3	26.0
Dissolved Oxygen (mg/L)		0.64	0.59	0.27
ORP	-169.40	-23.60	-164.50	-241.80
Ammonia (as N, mg/L)	3.05	0.38	0.09	2.60
Soluble o-PO4 (as P, mg/L)	0.58	0.12	0.20	0.62
Sulfide (µg/L)				
DOUR (mg/L/h)		6.9	4.7	3.3
FED DOUR (mg/L/hr)		10.5		
TSS (mg/L)	630	118	93	48
VSS (mg/L)				
%VSS				
tCOD (mg/L)	1468			806
sCOD (mg/L)	873	539	510	646
Bacteria Abundance (0 - 3)		2.0	2.0	
Flagellates		0	13	
Free Swimming Ciliates		0	4	
Stalked Ciliates		0	0	
Rotifers		0	0	
Total Indicators Observed		0	17	
Maturity Index		#DIV/0!	1.2	

Previous Visit

	Inlet	ASB Mid	ASB Effluent	Holding Pond Effluent
pH				
Temp. (°C)				
Dissolved Oxygen (mg/L)				
ORP				
Ammonia (as N, mg/L)				
Soluble o-PO4 (as P, mg/L)				
Sulfide (µg/L)				
DOUR (mg/L/h)				
FED DOUR (mg/L)				
TSS (mg/L)				
VSS (mg/L)				
%VSS				
sCOD (mg/L)				
tCOD (mg/L)				
Bacteria Abundance (0 - 3)				
Flagellates				
Free Swimming Ciliates				
Stalked Ciliates				
Rotifers				
Total Indicators Observed				
Maturity Index				

Summary:

- The soluble COD data showed a 42% reduction from the ASB Inlet to the ASB Effluent. This reduction in soluble COD is indicative of a reduction in BOD across the ASB. The DOUR of 6.9 mg/L/hr indicates an active biomass at the ASB midpoint, and the reduction in DOUR from the midpoint to the ASB Effluent to the Holding Pond Effluent is another indicator of BOD reduction across the system. A "Fed" DOUR was run at the ASB Midpoint, where the sample was artificially spiked with additional BOD (ASB Influent was added), and the increase in DOUR indicates the biomass will increase it's metabolic rate when presented with additional "food" at this point in the system.

- The micro exam showed a moderate to high abundance of dispersed bacteria in the ASB Midpoint and ASB Effluent samples, as well as a moderate abundance of pin floc in both samples. No higher life forms (protozoa/metazoa) were observed at the ASB Midpoint, but the ASB Effluent showed several flagellates and a few free swimming ciliates. Ciliates are generally considered indicators of aerobic, non-toxic conditions in ASB treatment systems. A low to moderate abundance of fiber was observed at the ASB midpoint sample, and a moderate abundance of grit and debris were observed in both samples.

- The excess paper stock in the front end of the system is an indication of previous primary clarification malfunction, and is what we call "phantom" BOD in the ASB at this time. Phantom BOD is insoluble organic material in a treatment system that slowly breaks down into soluble BOD over time. It's called "phantom" BOD because it will not show up on the influent BOD data (fiber takes longer than 5 days to degrade), but will make a BOD contribution to the treatment system over time as the fiber is broken down.

- While dissolved oxygen residuals weren't completely bottomed out at the ASB Midpoint and ASB Effluent, we generally consider D.O. concentrations under 1 mg/L in ASBs to be oxygen deficient. Getting the out of commision aerators back online in the front end of the system will increase the BOD removal capacity of the ASB, and promote more aerobic conditions.

- The TSS of 630 mg/L at the ASB Influent is elevated, indicating poor primary clarification efficiency and elevated solids loading into the ASB at this time.

- Ammonia and ortho-phosphate concentrations were over 0.1 mg/L at the ASB midpoint, which indicates adequate nitrogen and phosphorus availability for the biomass. Bacteria require macronutrients (N & P) at a ratio of 100:2.5:0.5 (BOD:N:P) for optimal BOD removal. Target residuals are 0.1-0.3 mg/L for both N & P in an ASB. The increase in ammonia from the ASB Effluent to the Holding Pond Effluent is due to benthic feedback, where settled sludge breaks down and releases ammonia and phosphate into the water.

- pH values were within the target range of 6.5 - 8.5 across the system.

If you have any questions about the report please let me know.

Tripp McElwee
Regional Consultant
mcelwee@ebsbiowizard.com
(864) 933 1240 (Cell)

New Indy - Catawba Wastewater Service Report

Tuesday, May 25, 2021

Today's Visit

Tuesday, May 25, 2021

	Inlet	ASB Mid	ASB Effluent	Holding Pond Effluent
pH	10.19	7.05	7.28	7.79
Temp. (°C)	44.6	32.2	29.1	26.8
Dissolved Oxygen (mg/L)		0.21	0.42	0.46
ORP	-131.30	-29.10	-46.50	-124.50
Ammonia (as N, mg/L)	3.02	0.03	0.03	3.14
Soluble o-PO4 (as P, mg/L)	0.38	0.08	0.07	0.45
Sulfide (µg/L)				
DOUR (mg/L/h)		4.3	2.6	2.9
FED DOUR (mg/L/hr)		12.2		
TSS (mg/L)	793	271	134	45
VSS (mg/L)	720	204	115	35
%VSS	91%	75%	85%	77%
tCOD (mg/L)				
sCOD (mg/L)	1303	407	231	323
Sulfide (mg/L)	0.35	0.14	0.13	1.94
Bacteria Abundance (0 - 3)		2.5	2.0	
Flagellates		3	3	
Free Swimming Ciliates		0	2	
Stalked Ciliates		2	0	
Rotifers		0	0	
Total Indicators Observed		5	5	
Maturity Index		1.8	1.4	

Previous Visit

Tuesday, May 11, 2021

	Inlet	ASB Mid	ASB Effluent	Holding Pond Effluent
pH	9.51	8.11	7.66	8.01
Temp. (°C)	44.0	33.1	31.3	26.0
Dissolved Oxygen (mg/L)		0.64	0.59	0.27
ORP	-169.40	-23.60	-164.50	-241.80
Ammonia (as N, mg/L)	3.05	0.38	0.09	2.60
Soluble o-PO4 (as P, mg/L)	0.58	0.12	0.20	0.62
Sulfide (µg/L)				
DOUR (mg/L/h)		6.9	4.7	3.3
FED DOUR (mg/L)		10.5		
TSS (mg/L)	630	118	93	48
VSS (mg/L)				
%VSS				
tCOD (mg/L)	1468			806
sCOD (mg/L)	873	539	510	646
Sulfide (mg/L)				
Bacteria Abundance (0 - 3)		2.0	2.0	
Flagellates		0	13	
Free Swimming Ciliates		0	4	
Stalked Ciliates		0	0	
Rotifers		0	0	
Total Indicators Observed		0	17	
Maturity Index		#DIV/0!	1.2	

Summary:

- Sulfide concentrations were measured in the ASB and Holding Pond today. Concentrations were low in the influent and ASB samples, but increased to 1.94 mg/L in the Holding Pond Effluent sample. This increase can be attributed to sulfate reducing bacteria in the Holding Pond converting sulfate to hydrogen sulfide. Sulfate reducing bacteria will metabolize BOD and produce sulfides when oxygen or nitrate are not available.

- The soluble COD data indicated elevated organic loading into the ASB today. The significant 82% drop in soluble COD is indicative of a reduction in BOD across the ASB. The increase in oxygen uptake in the Spiked DOUR (added 30 mL of influent to the sample) at the ASB Midpoint indicates the biomass is uninhibited and will increase it's metabolic rate when presented with additional BOD.

- The TSS in the influent continues to be elevated, indicating poor primary clarification efficiency and high solids loading into the ASB.

- The micro exam showed higher life forms (protozoa) in both the ASB midpoint and ASB Effluent. Two stalked ciliates were observed at the ASB Midpoint: these are sensitive microorganisms that generally exist in non-toxic, aerobic environments. Two free swimming ciliates were observed at the ASB Outfall as well. The ASB midpoint sample showed a high abundance of grit and debris, as well as pin floc and a few small compact pieces of floc. There was no floc larger than pin floc observed at the ASB Outfall, and the abundance of grit/debris decreased in this sample. Dispersed bacteria abundance was high in the midpoint (2.5 out of 3), and moderate to high in the ASB Effluent (2 out of 3).

- While dissolved oxygen concentrations were low at the ASB Midpoint, ASB Effluent, and Holding Pond (less than 0.5 mg/L), the Oxidation Reduction Potential (ORP) of these samples were increased from the previous visit, indicating more aerobic conditions than previously observed. We commonly utilize ORP to determine how anaerobic/aerobic an environment is whenever D.O. concentrations are low, as a lower value is a more "electron rich", reduced environment and indicates anaerobic conditions. For example, a sample with a D.O. of 0.2 mg/L and an ORP of -50 mV is significantly more aerobic than a sample with a D.O. of 0.2 mg/L and an ORP of -350 mV.

- Ammonia and ortho-phosphate concentrations were below the target range of 0.1 mg/L in the ASB today. While oxygen deficiency is the most important limiting growth pressure at this time, we should also be addressing nutrient deficiency at this time. Adding additional bioavailable nitrogen and phosphorus (ammonium and phosphate) to the ASB will improve the rate of BOD conversion and make the biomass more resilient to loading swings.

Please let me know if you have any questions or additional input at this time.

Tripp McElwee
Regional Consultant
mcelwee@ebsbiowizard.com
(864) 933 1240 (Cell)

New Indy - Catawba Wastewater Service Report

Wednesday, June 9, 2021

Today's Visit

Wednesday, June 9, 2021

	EQ	Clarifier Out	ASB Mid	ASB Effluent	Holding Pond Effluent
pH	9.59	9.24	8.62	8.17	8.20
Temp. (°C)	47.6	47.5	33.6	33.6	29.5
Dissolved Oxygen (mg/L)			0.90	0.13	0.30
ORP	-236.90	-189.80	-6.40	-173.90	-207.30
Ammonia (as N, mg/L)	3.02	0.18	0.04	0.08	2.20
Soluble o-PO4 (as P, mg/L)	0.50	0.50	0.13	0.15	0.34
DOUR (mg/L/h)			3.5	4.7	1.3
FED DOUR (mg/L/hr)			9.9		
TSS (mg/L)	1860	84	187	103	36
VSS (mg/L)	1380	72	133	88	32
%VSS	74%	86%	71%	85%	89%
tCOD (mg/L)					
sCOD (mg/L)	1168	1059	385	376	342
Sulfide (mg/L)	0.14	0.3	0.11	0.1	2.5
Bacteria Abundance (0 - 3)			2.5	2.0	
Flagellates			10	6	
Free Swimming Ciliates			2	1	
Stalked Ciliates			2	3	
Rotifers			0	0	
Total Indicators Observed			14	10	
Maturity Index			1.4	1.7	

Previous Visit

Tuesday, May 25, 2021

	EQ	Clarifier Out	ASB Mid	ASB Effluent	Holding Pond Effluent
pH		10.19	7.05	7.28	7.79
Temp. (°C)		44.6	32.2	29.1	26.8
Dissolved Oxygen (mg/L)			0.21	0.42	0.46
ORP		-131.30	-29.10	-46.50	-124.50
Ammonia (as N, mg/L)		3.02	0.03	0.03	3.14
Soluble o-PO4 (as P, mg/L)		0.38	0.08	0.07	0.45
DOUR (mg/L/h)			4.3	2.6	2.9
FED DOUR (mg/L)			12.2		
TSS (mg/L)		793	271	134	45
VSS (mg/L)		720	204	115	35
%VSS		91%	75%	85%	77%
tCOD (mg/L)					
sCOD (mg/L)		1303	407	231	323
Sulfide (mg/L)		0.35	0.14	0.13	1.94
Bacteria Abundance (0 - 3)			2.5	2.0	
Flagellates			3	3	
Free Swimming Ciliates			0	2	
Stalked Ciliates			2	0	
Rotifers			0	0	
Total Indicators Observed			5	5	
Maturity Index			1.8	1.4	

Summary:

The sulfide concentration at #1 Holding Pond was 2.5 mg/L today. Concentrations continue to be low in the influent and ASB samples, indicating H2S formation is occurring primarily in the Holding Pond.

The micro exam showed stalked ciliates and free swimming ciliates at the ASB Mid, and ASB Out sample points. Stalked ciliates are generally considered indicators of good biomass health, as they are sensitive microorganisms that don't survive in toxic or anaerobic conditions. There was abundant grit and debris observed in the ASB Mid sample, with the abundance decreasing in the ASB Out. This corresponds with the lower percent VSS observed in the ASB Mid sample, as there is a higher fraction of inorganic grit/debris in this part of the ASB.

Samples of the clarifier overflow and EQ basin effluent were sampled today. The EQ effluent TSS is elevated and is contributing to high solids loading into the ASB. The clarifier overflow TSS was low, and would normally indicate good primary clarification if the EQ solids weren't mixed in.

There was a 64% reduction in soluble COD from the clarifier overflow to the ASB Midpoint, and the drop is primarily due to soluble BOD treatment. The DOUR and sCOD data indicates the majority of BOD is treated by the ASB Mid sample. The holding pond DOUR is within a range that suggests low soluble BOD in the effluent.

The D.O. and ORP at the ASB Midpoint sample indicate more aerobic conditions than the previous service visits. Mark and I performed a D.O. and ORP profile of the ASB today, and several measurements showed D.O. concentrations above 1 mg/L, with a few being over 2 mg/L in the ASB, mostly in deeper areas closer to aerators.

Ammonia concentrations were under the recommended ASB range of 0.1 - 0.3 mg/L. Adequate concentrations of bioavailable nitrogen and phosphorus (ammonium and ortho-phosphate) will speed up the rate of BOD conversion in the ASB and make the biomass more resilient to loading swings.

On the next report I will create a compiled data tab so we can keep track of trended data.

Please let me know if you have any questions or additional input at this time.

Tripp McElwee
Regional Consultant
mcelwee@ebsbiowizard.com
(864) 933 1240 (Cell)