NAVAJO GENERATING STATION
P.O. Box 850
Page, AZ 86040
(928) 645-6217
Fax (928) 645-7298

ROBERT K. TALBOT
Manager

July 27, 2015

Director, Navajo Environmental Protection Agency
P.O. Box 339
Window Rock, AZ 86515

RE: Navajo Generating Station's 2015 Particulate Emissions Test Report

Dear Director,

As required by the Navajo Generating Station (NGS) Federal Implementation Plan, Condition (f) (1), NGS is submitting the results of its annual mass emissions tests for particulate matter. NGS completed its annual mass emissions tests for Units 1, 2 and 3 on May 28, 2015.

The particulate testing resulted in a plant wide-average of 0.017 lb/MMBtu as compared to the permit limit of 0.060 lb/MMBtu averaged on a plant-wide basis.

Should you have any questions please feel free to contact me at (928) 645-6577 or email me at paul.ostapuk@srpnet.com.

Sincerely,

Paul Ostapuk
Manager, Environmental, Labs, Safety and Training

Cc: Director, Air Division, U.S. Environmental Protection Agency, Region IX
Robert Talbot, Manager, NGS
Kara Montalvo, Director, Environmental Compliance and Permitting
Barbara Sprungl, Manager, Air Quality & Environmental Systems

CERTIFIED MAIL

CATALYST

AIR MANAGEMENT, INC.

SALT RIVER PROJECT
NAVAJO GENERATING STATION
UNITS 1, 2 & 3

PARTICULATE EMISSIONS TEST REPORT

CATALYST AIR MANAGEMENT, INC.
REPORT NUMBER 264-033

JUNE 29, 2015
Test Dates: May 18-21, 2015

Prepared for
Mr. Walter Begay
Salt River Project
Navajo Generating Station
State Highway 98
Page, AZ 86040

TABLE 2
Isokinetic Sampling Summary
EPA Method 5 - Particulate
NGS 1

Client: **Salt River Project**
Plant: **Navajo 1**
Location: **Stack**

Run Number:	**1**	**2**	**3**
Date:	5/18/2015	5/18/2015	5/18/2015
Run Time: Start	10:28	14:20	15:40
End	11:36	15:28	16:46
Unit Load (MW):	814	815	815
DN - Nozzle Diameter:	0.235	0.235	0.235
Pbar - Barometric Pressure:	25	25.00	25.05
TT - Sampling Time:	60	60	60
VM - Meter Volume:	45.354	43.934	45.281
TM - Avg. Meter Temp (F):	66	69	70
PM - Avg. Delta H (in. of H2O):	1.500	1.383	1.383
Y - Meter Calibration Factor:	0.99	0.99	0.99
VMSTD - Std. Gas Volume (SCF):	37.829	36.401	37.550
Vlc - Volume Water Collected:	127	125	123
%M - Percent Moisture:	13.7	13.9	13.4
Bws - Mole Fraction, Dry:	0.137	0.139	0.134
%CO2 - Carbon Dioxide, Dry:	12.6	13.2	13.2
%O2 - Oxygen, Dry:	6.9	6.3	6.2
%EA - Excess Air	48.1	42.1	41.1
MD - Dry Molecular Weight:	30.29	30.36	30.36
MS - Wet Molecular Weight:	28.61	28.64	28.71
A - Stack Area, SQ.FT:	948.40	948.40	948.40
PS - Static Press. (in. of Hg):	25.11	25.08	25.14
TS - Stack Temp. (F):	117	117	118
CP - Pitot Coefficient:	0.84	0.84	0.84
VS - Stack Gas Velocity (AFPS):	50.9	48.9	48.8
QS - Stack Gas Volume (DSCFM):	1,920,277	1,837,050	1,846,457
QA - Stack Gas Volume (ACFM):	2,894,563	2,781,813	2,777,771
%I - Isokinetic Ratio:	103.4	104.0	106.8
Particulate Emissions			
mg - Catch weight:	17.0	30.5	28.4
Gr/DSCF - Emission Concentration:	0.007	0.013	0.012
lb/hr - Emission Rate:	114.114	203.542	184.667
lb/MWH - Emission Rate:	0.140	0.250	0.227

Average Gr/DSCF	0.011
Average lb/hr	**167.441**
Average lb/MWH	**0.206**

TABLE 3

Isokinetic Sampling Summary
EPA Method 5 - Particulate
NGS 2

Client: **Salt River Project**
Plant: **Navajo 2**
Location: **Stack**

Run Number:	**1**	**2**	**3**
Date:	5/20/2015	5/20/2015	5/20/2015
Run Time: Start	11:11	12:35	14:06
End	12:17	13:41	15:13
Unit Load (MW):	806	806	806
DN - Nozzle Diameter:	0.235	0.235	0.235
Pbar - Barometric Pressure:	25.1	25.10	25.10
TT - Sampling Time:	60	60	60
VM - Meter Volume:	47.859	47.767	47.763
TM - Avg. Meter Temp (F):	68	72	74
PM - Avg. Delta H (in. of H2O):	1.642	1.625	1.592
Y - Meter Calibration Factor:	0.99	0.99	0.99
VMSTD - Std. Gas Volume (SCF):	39.939	39.541	39.405
Vlc - Volume Water Collected:	125	139	136
%M - Percent Moisture:	12.8	14.2	14.0
Bws - Mole Fraction, Dry:	0.128	0.142	0.140
%CO2 - Carbon Dioxide, Dry:	12.7	12.9	12.9
%O2 - Oxygen, Dry:	7.0	6.9	6.7
%EA - Excess Air	49.3	48.3	46.1
MD - Dry Molecular Weight:	30.31	30.34	30.33
MS - Wet Molecular Weight:	28.73	28.59	28.61
A - Stack Area, SQ.FT:	948.40	948.40	948.40
PS - Static Press. (in. of Hg):	25.23	25.23	25.23
TS - Stack Temp. (F):	118	117	117
CP - Pitot Coefficient:	0.84	0.84	0.84
VS - Stack Gas Velocity (AFPS):	52.7	52.8	51.9
QS - Stack Gas Volume (DSCFM):	2,015,753	1,988,735	1,960,790
QA - Stack Gas Volume (ACFM):	3,001,442	3,002,865	2,955,154
%I - Isokinetic Ratio:	104.0	104.4	105.5
Particulate Emissions			
mg - Catch weight:	18.1	27.8	21.6
Gr/DSCF - Emission Concentration:	0.007	0.011	0.008
lb/hr - Emission Rate:	120.801	184.891	142.064
lb/MWH - Emission Rate:	0.148404	0.227139	0.1745

Average Gr/DSCF	0.009
Average lb/hr	**149.252**
Average lb/MWH	**0.183**

TABLE 4
Isokinetic Sampling Summary
EPA Method 5 - Particulate
NGS 3

Client: **Salt River Project**
Plant: **Navajo 3**
Location: **Stack**

Run Number:	1	2	3
Date:	5/21/2015	5/21/2015	5/21/2015
Run Time: Start	10:20	15:34	5:10
End	12:26	16:40	6:15
Unit Load (MW):	809	810	810
DN - Nozzle Diameter:	0.235	0.235	0.235
Pbar - Barometric Pressure:	25.03	25.03	25.03
TT - Sampling Time:	60	60	60
VM - Meter Volume:	45.95	46.604	45.833
TM - Avg. Meter Temp (F):	72	71	73
PM - Avg. Delta H (in. of H2O):	1.525	1.533	1.517
Y - Meter Calibration Factor:	0.99	0.99	0.99
VMSTD - Std. Gas Volume (SCF):	37.936	38.516	37.785
Vlc - Volume Water Collected:	130	133	132
%M - Percent Moisture:	13.9	14.0	14.1
Bws - Mole Fraction, Dry:	0.139	0.140	0.141
%CO2 - Carbon Dioxide, Dry:	13.4	13.2	13.3
%O2 - Oxygen, Dry:	5.9	5.9	6.0
%EA - Excess Air	38.3	38.2	39.2
MD - Dry Molecular Weight:	30.38	30.35	30.37
MS - Wet Molecular Weight:	28.66	28.62	28.62
A - Stack Area, SQ.FT:	948.40	948.40	948.40
PS - Static Press. (in. of Hg):	25.15	25.15	25.15
TS - Stack Temp. (F):	117	116	116
CP - Pitot Coefficient:	0.84	0.84	0.84
VS - Stack Gas Velocity (AFPS):	51.1	51.3	51.1
QS - Stack Gas Volume (DSCFM):	1,927,407	1,933,312	1,923,000
QA - Stack Gas Volume (ACFM):	2,907,950	2,919,123	2,906,614
%I - Isokinetic Ratio:	103.3	104.6	103.2
<u>Particulate Emissions</u>			
mg - Catch weight:	14.1	16.0	15.3
Gr/DSCF - Emission Concentration:	0.006	0.006	0.006
lb/hr - Emission Rate:	94.731	106.135	102.968
lb/MWH - Emission Rate:	0.12	0.13	0.13

Average Gr/DSCF	0.006
Average lb/hr	**101.278**
Average lb/MWH	**0.124**

4.0 Description of Combustion Units

Navajo Generating Station (NGS) is located on the Navajo Reservation, 6 miles east of Page, Arizona, off U.S. Highway 98. NGS has three 750 MW (net) coal fired units with hot side electrostatic precipitators and wet limestone scrubbers.

5.0 Description of CEMS

The Units 1, 2 and 3 CEMS are dilution extraction systems that measures SO_2, NOx, CO_2, CO and flow at the sampling location. The CEMS analyzers includes a TEI Model 43i SO_2 analyzer, TEI Model 42i NOx analyzer, TEI Model 410i CO_2 analyzer, TEI Model 48i CO analyzer and a Teledyne 1500 Ultraflow flow monitor.

The recording and reporting requirements are performed by an ESC StackVision computerized data acquisition and handling system. The data acquisition and handling system utilizes an Fc factor (scf/mmBtu) of 1800 to calculate NOx emissions in lbs/mmBtu. The data acquisition and handling system reports the volumetric flow data in standard cubic feet per hour (SCFH).

Unit 1 CEMS

(1) TEI SO_2 – 43i - Serial No. - 1212352692
(1) TEI NOx – 42i - Serial No. - 1212352695
(1) TEI CO_2 – 410i - Serial No. - 1212352699
(1) TEI CO – 48i - Serial No. - 1103947059
(1) Teledyne Ultraflow150 - Serial No. – 1501118

Unit 2 CEMS

(1) TEI SO_2 – 43i - Serial No. - 1212352693
(1) TEI NOx – 42i - Serial No. - 1212352696
(1) TEI CO_2 – 410i - Serial No. - 1212352700
(1) TEI CO – 48i - Serial No. - 100394547
(1) Teledyne Ultraflow150 - Serial No. – 1501119

Unit 3 CEMS

(1) TEI SO_2 – 43i - Serial No. - 1212352694
(1) TEI NOx – 42i - Serial No. - 1212352697
(1) TEI CO_2 – 410i - Serial No. - 1212352701
(1) TEI CO – 48i - Serial No. - CM08490074
(1) Teledyne Ultraflow150 - Serial No. – 1501120

6.0 Sampling Program Procedures

The following test methods were utilized during the test program:

EPA Method 1	Sample and Velocity Traverse for Stationary Sources
EPA Method 2	Determination of Stack Gas Velocity and Volumetric Flow Rate
EPA Method 3A	Gas Analysis for CO_2, O_2, Excess Air and Dry Molecular Weight (Instrumental Analyzer Method)
EPA Method 4	Determination of Moisture Content in Stack Gas
EPA Method 5*	Determination of Particulate Matter Emissions from Stationary Sources (* MATS modified)

Three (3) 60-minute test runs were performed on Units 1, 2, and 3.

6.1 Particulate – EPA Method 5 (MATS modified)

The flue gas sample was extracted isokinetically from the gas stream and the particulate emissions were determined by gravimetrically determining the amount of particulate matter collected in the nozzle, probe, filter holder and filter. The probe and filter were both maintained at 320° ± 25° F. The sampling train consists of the following equipment connected in series:

Glass lined probe and stainless steel nozzle

Glass fiber filter within a heated filter holder with Teflon support

A modified Greenburg-Smith impinger containing 100 ml of distilled water

A Greenburg-Smith impinger containing 100 ml of distilled water

A modified Greenburg-Smith impinger, empty

A modified Greenburg-Smith impinger containing approximately 250g of silica gel

The sample volume was measured by passing it through a calibrated dry gas meter. An S-type pitot tube was attached to the probe to measure stack gas velocity and to maintain isokinetic sampling. A K-type thermocouple was also attached to the probe to measure the gas temperature.

After the run, the probe, nozzle and connecting glassware ahead of the filter were brushed and rinsed with acetone. The washings were retained in labeled, glass sample containers for analysis. The impinger contents were measured for increase in volume. The silica gel was returned to the original tared container and weighed to determine moisture gain.

Particulate matter was determined by using the analytical procedures outlined in EPA Method 5.

a. Dry each filter at 220° F for 2 hours, desiccate to a constant weight and record the results to 0.1 mg.

b. Measure the acetone rinse. Evaporate the acetone rinse in a tared beaker, desiccate to a constant weight and record results to 0.1 mg.

PM emission results are presented in units of grains per dry standard cubic feet (gr/dscf) and pounds per megaWatt hour (lb/MWH, the units of the filterable PM emissions standard).

6.2 O_2 and CO_2 – EPA Method 3A

A sample was continuously extracted and introduced into a Servomex 1400 O_2/CO_2 analyzer for determination of gas concentrations.

The sample was extracted through a heated stainless steel probe, heated sample line and sample conditioner to dry the sample before it enters the analyzers. A sample flow control system was used to control the flow into the analyzers. The analyzers were calibrated prior to starting the testing with EPA Protocol 1, calibration gases. A system bias check was performed before each run by introducing the zero and upscale gas at the back end of the sample probe. The system bias check was repeated at the end of each test run to determine the analyzer zero and calibration drift.

The O_2/CO_2 analyzer spans were 0-22% and 0-17%, respectively. The O_2 calibration gases utilized were 11.83% and 21.78%. The CO_2 calibration gases were 10.05% and 16.70%.

The sampling was conducted in a vertical section of the stack, which is 34.75 feet in diameter. There are four (4) test ports orientated 90 degrees apart. The test ports are located > 8.0 diameters downstream and > 2.0 diameters upstream from the nearest flow disturbance. The sampling was performed at three (3) traverse points for each port, 12 total points.

All sampling procedures, quality assurance, analysis and calculations utilized for the program were performed in accordance with the Code of Federal Regulations, Title 40, Part 60, Appendix A.

7.0 <u>Operating Conditions</u>

Operating conditions were monitored throughout the duration of the sampling program by SRP personnel. The testing was performed May 18-21, 2015, as follows:

UNIT	MW	DATE	# of RUNS
1	815	5/18/15	3
2	806	5/20/15	3
3	810	5/21/15	3

8.0 Quality Assurance Procedures

The quality assurance procedures utilized during the testing activities followed guidelines set forth by the previously mentioned methods and the EPA Quality Assurance Handbook for Source Sampling. The specific procedures for this test program are listed below.

8.1 Isokinetic Equipment

The sample nozzles were visually inspected and measured across three different diameters to determine the appropriate nozzle diameter.

S-type pitot tubes were visually inspected and measured to meet the design specifications of EPA Method 2 for a 0.84 pitot coefficient. Both legs of the pitot tube were leak checked before and after each sample run.

The stack thermocouples were calibrated prior to the testing and a post-test check was performed after the testing project.

The manometer was leveled and zeroed before each sample run.

The dry gas meter is fully calibrated annually using an EPA intermediate standard. Post -test dry gas meter checks were completed to verify the accuracy of the meter Yi.

Pre-test and post-test leak checks were completed and were less than 0.02 cfm at the highest sampling vacuum.

8.2 Instrumental Methods

Analyzer calibrations, system bias check and drift checks were completed before and after each sample run utilizing EPA Protocol calibration gases.

The analyzer interference responses were determined in accordance with Section 8.2.7 of Method 7E.

8.3 Data and Calculations

A manual calculation check is performed on a single run for each parameter.

9.0 Discussion

9.1 Chain of Custody

All of the field samples were collected, sealed and transported to the Catalyst facility in Knoxville, TN under the supervision of Rick Derrera. The samples were labeled to identify the following:

Client and source
Date
Type of Sample
Run number
Sample location
Sample fraction

9.2 Sampling Conditions and Concerns

There were no delays or interruptions during the testing.

APPENDIX 1
REFERENCE METHOD TEST RESULTS

Unit 1

Catalyst Air Management, Inc.
Method 5 Isokinetic Sample Sheet

Client: **Salt River Project**
Unit Tested: **Navajo 1**
Sampling Location: Stack

Run No: **1** 42142 5/18/15 Start Time: 10:28
End Time: 11:36

DIAMETER OF NOZZLE:	0.235		STACK DIAMETER =	417	in
AREA OF NOZZLE:	3.01E-04	A_n	STACK AREA =	948.4	sq. ft.
BAROMETRIC PRESSURE:	25.00	P_{bar}	VOLUME OF MOISTURE:	127.0	V_{lc}
GAS METER Y-FACTOR:	0.99	Y	PITOT COEFFICIENT:	0.84	C_p

POINT	TIME	GAS METER	VEL HEAD	PM ORIFICE	METER TEMP IN	METER TEMP OUT	STACK TEMP	CO2%	O2%	STATIC PRESS	SDE	VEL
		805.186										
A-1	5.0	809.6	0.70	1.70	63	62	117				20.10	53.8
2	5.0	813.1	0.66	1.60	64	62	116	12.6	6.9	1.50	19.50	52.2
3	5.0	816.961	0.59	1.40	65	62	117				18.45	49.4
		816.961										
B-1	5.0	820.8	0.67	1.60	66	64	117				19.66	52.7
2	5.0	824.6	0.67	1.60	67	64	116				19.64	52.6
3	5.0	828.358	0.62	1.50	67	64	116				18.90	50.6
		828.358										
C-1	5.0	832.2	0.65	1.60	68	64	116				19.35	51.8
2	5.0	835.9	0.59	1.40	69	65	117				18.45	49.4
3	5.0	839.408	0.56	1.30	69	65	117				17.98	48.2
		839.408										
D-1	5.0	843.2	0.64	1.50	70	66	118				19.23	51.5
2	5.0	846.9	0.59	1.40	70	66	117				18.45	49.4
3	5.0	850.540	0.57	1.40	70	66	117				18.14	48.6
RESULTS	TT	VM	SQRT PIT	PM		TM	TS	CO2	O2	STATIC	SDE	VEL
	60.0	45.354	0.791	1.500		66	117	12.6	6.9	1.50	18.99	50.9
	net	net	avg	avg		avg	avg	avg	avg	avg	avg	ft/sec

P_s =	25.11	$V_{m(std)}$ =	37.829	$V_{w(std)}$ =	5.982	%M=	13.65
B_{ws} =	0.137	M_d =	30.29	M_s =	28.61	%EA=	48.08

STACK GAS VELOCITY =	50.9	AFPS	V_s
STACK GAS VELOCITY =	3,052	AFPM	
STACK GAS VOLUME =	1,920,277	DSCFM	Q_{std}
STACK GAS VOLUME =	2,894,563	ACFM	Q_a
ISOKINETIC RATIO =	103.4	%	

EMISSIONS

	PM
Weight, mg =	17.0
GR/DSCF =	0.007
LBS/Hr =	114.114
LBS/MWh=	0.14

Catalyst Air Management, Inc.
Method 5 Isokinetic Sample Sheet

Client: **Salt River Project**
Unit Tested: **Navajo 1**
Sampling Location: Stack

Run No: **2** Date: 5/18/15 Start Time: 14:20
End Time: 15:28

DIAMETER OF NOZZLE:	0.235		STACK DIAMETER =	417	in
AREA OF NOZZLE:	3.01E-04	A_n	STACK AREA =	948.4	sq. ft.
BAROMETRIC PRESSURE:	25.00	P_{bar}	VOLUME OF MOISTURE:	125.0	V_{lc}
GAS METER Y-FACTOR:	0.99	Y	PITOT COEFFICIENT:	0.84	C_p

POINT	TIME	GAS METER	VEL HEAD	PM ORIFICE	METER TEMP IN	METER TEMP OUT	STACK TEMP	CO2%	O2%	STATIC PRESS	SDE	VEL
		850.645										
D-1	5.0	854.0	0.50	1.20	70	68	116	13.2	6.3		16.97	45.5
2	5.0	857.2	0.45	1.10	70	68	117			1.10	16.11	43.2
3	5.0	861.141	0.59	1.40	70	68	117				18.45	49.4
		861.141										
C-1	5.0	864.8	0.62	1.50	70	68	117				18.91	50.7
2	5.0	868.4	0.59	1.40	70	69	117				18.45	49.4
3	5.0	872.058	0.55	1.30	70	69	117				17.81	47.7
		872.058										
B-1	5.0	875.7	0.59	1.40	70	68	117				18.45	49.4
2	5.0	879.5	0.63	1.50	70	68	117				19.07	51.1
3	5.0	883.246	0.60	1.40	70	68	117				18.61	49.9
		883.246										
A-1	5.0	887.1	0.62	1.50	70	67	117				18.91	50.7
2	5.0	890.8	0.63	1.50	71	67	117				19.07	51.1
3	5.0	894.579	0.57	1.40	71	68	117				18.14	48.6
RESULTS	TT	VM	SQRT PIT	PM		TM	TS	CO2	O2	STATIC	SDE	VEL
	60.0	43.934	0.760	1.383		69	117	13.2	6.3	1.10	18.25	48.9
	net	net	avg	avg		avg	avg	avg	avg	avg	avg	ft/sec

P_s =	25.08	$V_{m(std)}$ =	36.401	$V_{w(std)}$ =	5.888	%M=	13.92
B_{ws} =	0.139	M_d =	30.36	M_s =	28.64	%EA=	42.13

STACK GAS VELOCITY =	48.9	AFPS	V_s
STACK GAS VELOCITY =	2,933	AFPM	
STACK GAS VOLUME =	1,837,050	DSCFM	Q_{std}
STACK GAS VOLUME =	2,781,813	ACFM	Q_a
ISOKINETIC RATIO =	104.0	%	

EMISSIONS

	PM
Weight, mg =	30.5
GR/DSCF =	0.013
LBS/Hr =	203.542
LBS/MWh=	0.25

Catalyst Air Management, Inc.

Method 5 Isokinetic Sample Sheet

Client: **Salt River Project**
Unit Tested: **Navajo 1**
Sampling Location: Stack

Run No: **3** Date: 5/18/15 Start Time: 15:40
End Time: 16:46

DIAMETER OF NOZZLE:	0.235		STACK DIAMETER =	417	in
AREA OF NOZZLE:	3.01E-04	A_n	STACK AREA =	948.4	sq. ft.
BAROMETRIC PRESSURE:	25.05	P_{bar}	VOLUME OF MOISTURE:	123.0	V_{lc}
GAS METER Y-FACTOR:	0.99	Y	PITOT COEFFICIENT:	0.84	C_p

POINT	TIME	GAS METER	VEL HEAD	PM ORIFICE	METER TEMP IN	METER TEMP OUT	STACK TEMP.	CO2%	O2%	STATIC PRESS.	SDE	VEL
		894.925										
A-1	5.0	898.8	0.63	1.50	70	68	118				19.08	51.0
2	5.0	902.5	0.59	1.40	70	68	118	13.2	6.2	1.20	18.47	49.4
3	5.0	906.101	0.55	1.30	70	68	117				17.81	47.6
		906.101										
B-1	5.0	909.8	0.60	1.40	70	68	118				18.62	49.8
2	5.0	913.6	0.63	1.50	71	68	118				19.08	51.0
3	5.0	917.357	0.57	1.40	71	68	118				18.15	48.5
		917.357										
C-1	5.0	921.1	0.62	1.50	72	68	119				18.95	50.6
2	5.0	924.9	0.57	1.40	72	68	118				18.15	48.5
3	5.0	928.513	0.54	1.30	72	68	118				17.67	47.2
		928.513										
D-1	5.0	932.1	0.60	1.40	72	69	119				18.64	49.8
2	5.0	935.7	0.54	1.30	72	69	118				17.67	47.2
3	5.0	940.206	0.49	1.20	72	68	119				16.84	45.0
RESULTS	TT	VM	SQRT PIT	PM		TM	TS	CO2	O2	STATIC	SDE	VEL
	60.0	45.281	0.759	1.383		70	118	13.2	6.2	1.20	18.26	48.8
	net	net	avg	avg		avg	avg	avg	avg	avg	avg	ft/sec

P_s =	25.14	$V_{m(std)}$ =	37.550	$V_{w(std)}$ =	5.793	%M=	13.37
B_{ws} =	0.134	M_d =	30.36	M_s =	28.71	%EA=	41.12

STACK GAS VELOCITY =	48.8	AFPS	V_s
STACK GAS VELOCITY =	2,929	AFPM	
STACK GAS VOLUME =	1,846,457	DSCFM	Q_{std}
STACK GAS VOLUME =	2,777,771	ACFM	Q_a
ISOKINETIC RATIO =	106.8	%	

EMISSIONS

	PM
Weight, mg =	28.4
GR/DSCF =	0.012
LBS/Hr =	184.667
LBS/MWh=	0.23

Catalyst Air Management, Inc.

MOISTURE DETERMINATION

Run:		1	2	3
Impinger				
100ml	1	100.0	100.0	100.0
		182.0	186.0	188.0
		82.0	**86.0**	**88.0**
100ml	2	100.0	100.0	100.0
		132.0	126.0	124.0
		32.0	**26.0**	**24.0**
0	3	0.0	0.0	0.0
		6.0	6.0	4.0
		6.0	**6.0**	**4.0**
GeL	5	250.0	250.0	250.0
250g		257.0	257.0	257.0
		7.0	**7.0**	**7.0**
	Total mg:	**127.0**	**125.0**	**123.0**

CATALYST AIR MANAGEMENT Inc.
CALIBRATION DATA

CLIENT: Salt River Project
PLANT: Navajo 1
TEST: 3A
LOCATION: Stack

RUN #: 1-3
LOAD LEVEL: High
DATE: 5/18/2015

GAS UNITS	ANALYZER SCALE	CYLINDER VALUE	ANALYZER VALUE	DIFF PPM	% SPAN	Pass Yes\No
O2, %		0.00	0.00	0.00	0.00	**YES**
O2, %	**25**	11.83	11.72	0.11	0.51	**YES**
O2, %		21.78	21.75	0.03	0.14	**YES**
CO2, %		0.00	0.00	0.00	0.00	**YES**
CO2, %	**20**	10.050	10.02	0.03	0.18	**YES**
CO2, %		16.70	16.62	0.08	0.48	**YES**

RUN 1
SYSTEM CALIBRATION BIAS AND DRIFT DATA

GAS UNITS	ANALYZER VALUE	PRE-TEST CHECK	% SPAN	Pass YES\NO	POST-TEST CHECK	% SPAN	% DRIFT	Pass YES\NO
O2, %	0.00	0.00	0.00	**YES**	0.00	0.00	0.00	**YES**
O2, %	11.72	11.60	0.55	**YES**	11.55	0.78	0.23	**YES**
CO2, %	0.00	0.00	0.00	**YES**	0.00	0.00	0.00	**YES**
CO2, %	10.02	9.78	1.44	**YES**	9.70	1.92	0.48	**YES**

UNCORRECTED ANALYZER VALUES

	DRY
O2, %	6.72
CO2, %	12.18

ANALYZER VALUES CORRECTED FOR DRIFT

	DRY
O2, %	6.9
CO2, %	12.6

RUN 2
SYSTEM CALIBRATION BIAS AND DRIFT DATA

GAS UNITS	ANALYZER VALUE	PRE-TEST CHECK	% SPAN	Pass YES\NO	POST-TEST CHECK	% SPAN	% DRIFT	Pass YES\NO
O2, %	0.00	0.00	0.00	**YES**	0.00	0.00	0.00	**YES**
O2, %	11.72	11.55	0.78	**YES**	11.58	0.64	0.14	**YES**
CO2, %	0.00	0.00	0.00	**YES**	0.00	0.00	0.00	**YES**
CO2, %	10.02	9.70	1.92	**YES**	9.81	1.26	0.66	**YES**

UNCORRECTED ANALYZER VALUES

	DRY
O2, %	6.12
CO2, %	12.83

ANALYZER VALUES CORRECTED FOR DRIFT

	DRY
O2, %	6.3
CO2, %	13.2

RUN 3
SYSTEM CALIBRATION BIAS AND DRIFT DATA

GAS UNITS	ANALYZER VALUE	PRE-TEST CHECK	% SPAN	Pass YES\NO	POST-TEST CHECK	% SPAN	% DRIFT	Pass YES\NO
O2, %	0.00	0.00	0.00	**YES**	0.00	0.00	0.00	**YES**
O2, %	11.72	11.58	0.64	**YES**	11.55	0.78	0.14	**YES**
CO2, %	0.00	0.00	0.00	**YES**	0.00	0.00	0.00	**YES**
CO2, %	10.02	9.81	1.26	**YES**	9.72	1.80	0.54	**YES**

UNCORRECTED ANALYZER VALUES

	DRY
O2, %	6.08
CO2, %	12.78

ANALYZER VALUES CORRECTED FOR DRIFT

	DRY
O2, %	6.2
CO2, %	13.2

CATALYST AIR MANAGEMENT Inc.

CLIENT: Salt River Project
UNIT: Navajo 1

RUN #: 1-3
LOAD LEVEL High
DATE: 5/18/2015

Run 1

DATE	TIME	O2	CO2
5/18/2015	10:28	6.91	11.39
5/18/2015	10:29	6.8	11.4
5/18/2015	10:30	6.86	12.18
5/18/2015	10:31	6.85	12.17
5/18/2015	10:32	6.9	12.12
5/18/2015	10:33	6.86	12.09
5/18/2015	10:34	6.87	12.11
5/18/2015	10:35	6.94	11.82
5/18/2015	10:36	6.92	11.83
5/18/2015	10:37	6.88	12.06
5/18/2015	10:38	6.76	12.09
5/18/2015	10:39	6.7	12.28
5/18/2015	10:40	6.66	12.33
5/18/2015	10:41	6.69	12.29
5/18/2015	10:42	6.7	12.28
5/18/2015	10:43	6.72	12.26
5/18/2015	10:44	6.69	12.44
5/18/2015	10:45	6.73	12.27
5/18/2015	10:46	6.75	12.12
5/18/2015	10:47	6.6	12.36
5/18/2015	10:48	6.52	11.99
5/18/2015	10:49	6.64	12.12
5/18/2015	10:50	6.69	12.29
5/18/2015	10:51	6.77	12.22
5/18/2015	10:52	6.86	12.08
5/18/2015	10:53	6.79	11.9
5/18/2015	10:54	6.76	12.22
5/18/2015	10:55	6.76	12.07
5/18/2015	10:56	6.74	12.22
5/18/2015	10:57	6.77	11.83
5/18/2015	10:58	6.78	12.21
5/18/2015	10:59	6.65	12.24
5/18/2015	11:00	6.62	12.27
5/18/2015	11:01	6.53	11.45
5/18/2015	11:02	6.61	12.29
5/18/2015	11:03	6.65	11.87
5/18/2015	11:04	6.69	12.28
5/18/2015	11:05	6.71	12.3
5/18/2015	11:06	6.73	12.1
5/18/2015	11:07	6.59	12.4
5/18/2015	11:08	6.6	12.39
5/18/2015	11:09	6.57	12.42
5/18/2015	11:10	6.55	12.44
5/18/2015	11:11	6.51	12.47
5/18/2015	11:12	6.53	12.45
5/18/2015	11:13	6.56	11.87
5/18/2015	11:14	6.52	12.35
5/18/2015	11:15	6.67	11.97
5/18/2015	11:16	6.83	11.52
5/18/2015	11:17	6.69	12.33
5/18/2015	11:18	6.73	11.99
5/18/2015	11:19	7.02	12.59
5/18/2015	11:20	7.24	12.68
5/18/2015	11:21	7.24	12.64
5/18/2015	11:22	7.12	12.04
5/18/2015	11:23	6.89	12.26
5/18/2015	11:24	6.69	11.7
5/18/2015	11:25	6.61	12.48
5/18/2015	11:26	6.66	12.25
5/18/2015	11:27	6.62	12.23
5/18/2015	11:28	6.53	11.86
5/18/2015	11:29	6.61	12.32
5/18/2015	11:30	6.63	12.36
5/18/2015	11:31	6.53	12.49
5/18/2015	11:32	6.5	12.49
5/18/2015	11:33	6.49	12.49
5/18/2015	11:34	6.52	12.47
5/18/2015	11:35	6.5	12.49
5/18/2015	11:36	6.53	12.45
		6.72	12.18

Run 2

DATE	TIME	O2	CO2
5/18/2015	14:20	6.16	12.8
5/18/2015	14:21	6.21	12.76
5/18/2015	14:22	6.26	12.71
5/18/2015	14:23	6.26	12.73
5/18/2015	14:24	6.25	12.73
5/18/2015	14:25	6.32	12.67
5/18/2015	14:26	6.27	12.72
5/18/2015	14:27	6.22	12.76
5/18/2015	14:28	6.13	12.83
5/18/2015	14:29	6.09	12.87
5/18/2015	14:30	6.12	12.84
5/18/2015	14:31	5.99	12.95
5/18/2015	14:32	6.05	12.91
5/18/2015	14:33	6.12	12.85
5/18/2015	14:34	5.98	12.97
5/18/2015	14:35	5.94	13
5/18/2015	14:36	6.07	12.9
5/18/2015	14:37	6.11	12.86
5/18/2015	14:38	6.13	12.85
5/18/2015	14:39	6.16	12.82
5/18/2015	14:40	6.1	12.87
5/18/2015	14:41	6.13	12.85
5/18/2015	14:42	6.12	12.85
5/18/2015	14:43	6.06	12.9
5/18/2015	14:44	6.03	12.93
5/18/2015	14:45	5.93	13.02
5/18/2015	14:46	5.97	12.99
5/18/2015	14:47	6.15	12.84
5/18/2015	14:48	6.14	12.84
5/18/2015	14:49	6.1	12.87
5/18/2015	14:50	6.1	12.88
5/18/2015	14:51	6.04	12.92
5/18/2015	14:52	6.11	12.87
5/18/2015	14:53	6.07	12.9
5/18/2015	14:54	6.01	12.96
5/18/2015	14:55	6.02	12.96
5/18/2015	14:56	6.16	12.84
5/18/2015	14:57	6.09	12.9
5/18/2015	14:58	6.05	12.93
5/18/2015	14:59	6.07	12.91
5/18/2015	15:00	6.19	12.81
5/18/2015	15:01	6.26	12.76
5/18/2015	15:02	6.18	12.82
5/18/2015	15:03	6.18	12.83
5/18/2015	15:04	6.21	12.8
5/18/2015	15:05	6.16	12.83
5/18/2015	15:06	6.12	12.86
5/18/2015	15:07	6	12.96
5/18/2015	15:08	5.87	13
5/18/2015	15:09	5.8	13
5/18/2015	15:10	6.07	12.79
5/18/2015	15:11	6.22	12.67
5/18/2015	15:12	6.27	12.64
5/18/2015	15:13	6.14	12.75
5/18/2015	15:14	6.16	12.74
5/18/2015	15:15	6.21	12.71
5/18/2015	15:16	6.23	12.69
5/18/2015	15:17	6.16	12.73
5/18/2015	15:18	6.16	12.74
5/18/2015	15:19	6.13	12.77
5/18/2015	15:20	6.13	12.78
5/18/2015	15:21	6.23	12.7
5/18/2015	15:22	6.15	12.74
5/18/2015	15:23	6.11	12.76
5/18/2015	15:24	6.06	12.82
5/18/2015	15:25	6.05	12.83
		6.12	12.83

Run 3

DATE	TIME	O2	CO2
5/18/2015	15:40	6.11	12.77
5/18/2015	15:41	6.03	12.81
5/18/2015	15:42	6.05	12.79
5/18/2015	15:43	6.05	12.81
5/18/2015	15:44	6.17	12.71
5/18/2015	15:45	6.18	12.7
5/18/2015	15:46	6.18	12.66
5/18/2015	15:47	6.13	12.7
5/18/2015	15:48	6.01	12.79
5/18/2015	15:49	5.86	12.91
5/18/2015	15:50	5.93	12.87
5/18/2015	15:51	6.08	12.77
5/18/2015	15:52	6.2	12.68
5/18/2015	15:53	6.15	12.73
5/18/2015	15:54	6.08	12.8
5/18/2015	15:55	6	12.85
5/18/2015	15:56	6.05	12.82
5/18/2015	15:57	6.02	12.86
5/18/2015	15:58	5.99	12.88
5/18/2015	15:59	6.09	12.82
5/18/2015	16:00	6.01	12.88
5/18/2015	16:01	5.94	12.94
5/18/2015	16:02	5.96	12.93
5/18/2015	16:03	5.99	12.88
5/18/2015	16:04	6	12.88
5/18/2015	16:05	6.29	12.64
5/18/2015	16:06	6.38	12.5
5/18/2015	16:07	6.36	12.53
5/18/2015	16:08	6.32	12.58
5/18/2015	16:09	6.35	12.56
5/18/2015	16:10	6.35	12.58
5/18/2015	16:11	6.36	12.56
5/18/2015	16:12	6.33	12.57
5/18/2015	16:13	6.17	12.72
5/18/2015	16:14	6.16	12.73
5/18/2015	16:15	6.07	12.76
5/18/2015	16:16	6.01	12.81
5/18/2015	16:17	5.89	12.93
5/18/2015	16:18	6.01	12.84
5/18/2015	16:19	6.05	12.8
5/18/2015	16:20	6.07	12.8
5/18/2015	16:21	6.11	12.77
5/18/2015	16:22	6.12	12.73
5/18/2015	16:23	6.08	12.75
5/18/2015	16:24	6.05	12.78
5/18/2015	16:25	5.98	12.84
5/18/2015	16:26	5.94	12.9
5/18/2015	16:27	6.05	12.82
5/18/2015	16:28	6.1	12.78
5/18/2015	16:29	6.07	12.81
5/18/2015	16:30	6.03	12.85
5/18/2015	16:31	6.08	12.82
5/18/2015	16:32	6.04	12.8
5/18/2015	16:33	5.95	12.85
5/18/2015	16:34	5.84	12.96
5/18/2015	16:35	6.09	12.76
5/18/2015	16:36	6.17	12.66
5/18/2015	16:37	6.16	12.68
5/18/2015	16:38	6.07	12.78
5/18/2015	16:39	6.04	12.82
5/18/2015	16:40	6.11	12.77
5/18/2015	16:41	6.06	12.82
5/18/2015	16:42	5.89	12.97
5/18/2015	16:43	5.82	13
5/18/2015	16:44	6.01	12.82
5/18/2015	16:45	5.99	12.83
5/18/2015	16:46	6.2	12.66
		6.08	12.78

CATALYST AIR MANAGEMENT, INC. (865) 531-0075
Air Quality Testing Services (865) 531-0750 Fax
2505 Byington Solway Road
Knoxville, TN 37931

Field Isokinetic Data Sheet

Client	SRP	Pitot No.	CAM 10-01	Filter Number	C3B 563
Plant	Navajo	Nozzle No.	CAM 210	Initial Leak (Samp.)	0.000@5"
Location	Unit 1 Stack	Nozzle Dn.	0.235	Initial Leak (Pitot)	ok@3"
Test	MS	Stack TC No.	CAM-30		ok@4"
Run	1 Baseline	P_B	25.00		
Date	5-18-15	Ambient Temp	61 °F	Final Leak (Samp.)	0.000@5"
Meter Box	020	Static	+1.5	Final Leak (Pitot)	ok@6"
ΔH	1.63 | Y_1 .99				ok@6"

K = 2.4

POINT	TIME ACTUAL	RUN	METER	ΔP	Δh	STACK °F	PROBE °F	Filter °F	METER °F IN	OUT	EXIT °F	VAC
	10:28		805.186									
A1		5	809.2	.7	1.7	117	320	303	63	62	55	2.0
2		10	813.1	.66	1.6	116	321	308	64	62	51	2.0
3	10:43	15	816.961	.59	1.4	117	322	315	65	62	52	2.0
	10:46		816.961									
B1		20	820.8	.67	1.6	117	322	319	66	64	51	2.0
2		25	824.6	.67	1.6	116	319	310	67	64	50	2.0
3		30	828.388	.62	1.5	116	320	311	67	64	49	2.0
	11:03		828.388									
C1		35	832.2	.65	1.6	116	320	312	68	64	49	3.0
2		40	835.9	.59	1.4	117	320	317	69	65	48	3.0
3		45	839.408	.56	1.3	117	320	322	69	65	50	3.0
	11:21		839.408									
D1		50	843.2	.64	1.5	118	320	318	70	66	48	3.0
2		55	846.9	.59	1.4	117	320	322	70	66	50	3.0
3	11:36	60	850.540	.57	1.4	117	321	317	70	66	52	3.0

Operator: KS Imp 1: 186 Imp 2: 132 Imp 3: 6 Gel: 257

Comments:

CATALYST AIR MANAGEMENT, INC. (865) 531-0075
Air Quality Testing Services (865) 531-0750 Fax
2505 Byington-Solway Road
Knoxville, TN 37931

PLANT: NGS DATE: 5/18/15
SAMPLING TIME: (24 HR CLOCK) 1028 - 1136
SAMPLING LOCATION: 1 Stack
SAMPLING TYPE: Cutme
ANALYTICAL METHOD: 3A/5B AMB. TEMP (°F) 61
TECHNICIAN: Stone / Whitt / Norrod

DMW & Emission Data Sheet

Pm 1

RUN / GAS	1		2		3		AVERAGE NET VOLUME	Fo (TEST) = $\frac{20.9 - \%O_2}{\%CO_2}$	
	ACTUAL READING	NET	ACTUAL READING	NET	ACTUAL READING	NET			
CO_2							12.6		
O_2 (NET IS ACTUAL MINUS ACTUAL CO_2)							6.9	Fuel Type COAL RESIDUAL FUEL OIL NATURAL GAS	Fo (calc) 1.266 1.116

SYSTEM LEAK CHECK ok NA initial
INITIAL ORSAT ANALYZER LEAK CHECK (FLUID LEVEL) ____/____ BUBBLER ____
FINAL ORSAT ANALYZER LEAK CHECK (FLUID LEVEL) ____/____ BUBBLER ____

MOISTURE

	1	2	3	4	5	6	GEL	TOTALS
FINAL (ml)	132	132	6				257	
INITIAL (ml)	100	100	6				250	
NET (ml)	32	32	6				7	127
TOTALS								127

PARTICULATE CATCH

FILTER WEIGHTS					PROBE/NOZZLE WASH				
FILTER NO.	C3B-523			WEIGHED BY	BEAKER NO.	35		Bank	WEIGHED BY
FINAL WEIGHT	0.3853			ST/RD	FINAL WEIGHT	97.6375		99.4093	ST/RD
INITIAL WEIGHT	0.3755				INITIAL WEIGHT	97.6302		99.4092	
DIFFERENCE	0.0098				DIFFERENCE	0.0073		0.0001	
PARTICULATE CATCH	9.8				PARTICULATE CATCH	7.3		0.1	

TOTAL PARTICULATE CATCH (mg) 170

CATALYST AIR MANAGEMENT, INC. (865) 531-0075
Air Quality Testing Services (865) 531-0750 Fax
2505 Byington Solway Road
Knoxville, TN 37931

Field Isokinetic Data Sheet

Client	SRP	Pitot No.	CAM-137	Filter Number	CSB-564
Plant	Navajo	Nozzle No.	CAM-203	Initial Leak (Samp.)	0.00005"
Location	Unit 1	Nozzle Dn.	.235	Initial Leak (Pitot)	ok@4"
Test	M5	Stack TC No.	CAM 30		ok@5"
Run	2	P_B	25.00		
Date	5-18-15	Ambient Temp	61°F	Final Leak (Samp.)	0.002@7"
Meter Box	020	Static	+1.1	Final Leak (Pitot)	ok@6"
ΔH	1.63	Y_1 .99			ok@6"

K=2.4

POINT	TIME ACTUAL	TIME RUN	METER	ΔP	Δh	STACK °F	PROBE °F	Filter °F	METER °F IN	METER °F OUT	EXIT °F	VAC
	14:20		850.645									
D1		5	854.0	.5	1.2	116	309	311	70	68	55	2.0
2		10	857.2	.45	1.1	117	312	318	70	68	45	2.0
3	14:35	15	861.141	.59	1.4	117	317	320	70	68	42	2.0
	14:37		861.141									
C1		20	864.8	.62	1.5	117	308	310	70	68	42	3.0
2		25	868.4	.59	1.4	117	311	313	70	69	43	3.0
3	1454	30	872.058	.55	1.3	117	303	321	70	69	42	3.0
1456	1456		872.058									
B1		35	875.7	.59	1.4	117	299	308	70	68	45	3.0
2		40	879.5	.63	1.5	117	309	311	70	68	47	3.0
3	1511	45	883.246	.60	1.4	117	303	312	70	68	47	3.0
	1513		883.246									
A1		50	887.1	.62	1.5	117	301	318	70	67	48	4.0
2		55	890.8	.63	1.5	117	308	322	71	67	50	4.0
3	1528	60	894.579	.57	1.4	117	303	317	71	68	51	4.0

Operator: KS Imp 1: 186 Imp 2: 126 Imp 3: 6 Gel: 257

Comments:

CATALYST AIR MANAGEMENT, INC. (865) 531-0075
Air Quality Testing Services (865) 531-0750 Fax
2505 Byington-Solway Road
Knoxville, TN 37931

PLANT: NGS DATE: 5/13/15
SAMPLING TIME: (24 HR CLOCK) 1420 - 1526
SAMPLING LOCATION: Stack
SAMPLING TYPE: Continuous
ANALYTICAL METHOD: 3A/5B AMB. TEMP (°F) 61
TECHNICIAN: Strand / Which / Norwood

DMW & Emission Data Sheet

Run 2

RUN / GAS	1		2		3		AVERAGE NET VOLUME	Fo (TEST) = 20.9 − %O₂ / %CO2	
	ACTUAL READING	NET	ACTUAL READING	NET	ACTUAL READING	NET			
CO_2							13.2		
O_2 (NET IS ACTUAL MINUS ACTUAL CO_2)							6.3	Fuel Type COAL RESIDUAL FUEL OIL NATURAL GAS	Fo (calc) 1.280 1.414

SYSTEM LEAK CHECK ✓ NA method
INITIAL ORSAT ANALYZER LEAK CHECK (FLUID LEVEL) ____/____ BUBBLER ____
FINAL ORSAT ANALYZER LEAK CHECK (FLUID LEVEL) ____/____ BUBBLER ____

MOISTURE

	1	2	3	4	5	6	GEL	TOTALS
FINAL (ml)	186	126	6				257	
INITIAL (ml)	100	100	6				250	
NET (ml)	86	26	6				7	125
TOTALS								125

PARTICULATE CATCH

FILTER WEIGHTS					PROBE/NOZZLE WASH				
FILTER NO.	C3B 564			WEIGHED BY	BEAKER NO.	34		Blank	WEIGHED BY
FINAL WEIGHT	0.3957			ST/AD	FINAL WEIGHT	102.9048			ST/AD
INITIAL WEIGHT	0.3735				INITIAL WEIGHT	102.8924			
DIFFERENCE	0.0222				DIFFERENCE	0.0024			
PARTICULATE CATCH	22.2				PARTICULATE CATCH	0.4		0.1	

TOTAL PARTICULATE CATCH (mg) 30.5

CATALYST AIR MANAGEMENT, INC. (865) 531-0075
Air Quality Testing Services (865) 531-0750 Fax
2505 Byington Solway Road
Knoxville, TN 37931

Field Isokinetic Data Sheet

Client	SRP	Pitot No.	CAM 10-01	Filter Number	CBB - 535
Plant	Navajo	Nozzle No.	CAM 210	Initial Leak (Samp.)	0.000@5"
Location	Unit 1 Stack	Nozzle Dn.	.255	Initial Leak (Pitot)	OK@6"
Test	MS	Stack TC No.	P-14		OK@7"
Run	3	P_B	25.05		
Date	5-18-15	Ambient Temp	60 °F	Final Leak (Samp.)	0.000@7"
Meter Box	020	Static	+1.2	Final Leak (Pitot)	OK@5"
ΔH	1.63 | Y_1 .99				OK@6"

$K_1 = 2.4$

POINT	TIME ACTUAL	TIME RUN	METER	ΔP	Δh	STACK °F	PROBE °F	Filter °F	METER °F IN	METER °F OUT	EXIT °F	VAC
	15:40		894.925			118						
A1		5	898.8	.63	1.5	~~320~~	320	321	70	68	55	3.0
2		10	902.5	.59	1.4	118	320	319	70	68	54	3.0
3	15:55	15	906.101	.55	1.3	117	320	314	70	68	52	3.0
	15:57		906.101									
B1		20	909.8	.60	1.4	118	320	320	70	68	54	3.0
2		25	913.6	.63	1.5	118	321	311	71	68	48	3.0
3	16:12	30	917.357	.57	1.4	118	320	299	71	68	46	3.0
	16:14		917.357									
C1		35	921.1	.62	1.5	119	320	320	72	68	44	3.0
2		40	924.9	.57	1.4	118	320	320	72	68	42	3.0
3	16:29	45	928.513	.54	1.3	118	320	322	72	68	43	3.0
	16:31		928.513									
D1		50	932.1	.60	1.4	119	320	319	72	69	42	3.0
2		55	935.7	.54	1.3	118	320	322	72	69	42	3.0
3	16:46	60	940.206	.49	1.2	119	320	320	72	68	45	3.0

Operator: KS Imp 1: 188 Imp 2: 124 Imp 3: 4 Gel: 257

Comments:

CATALYST AIR MANAGEMENT, INC. (865) 531-0075
Air Quality Testing Services (865) 531-0750 Fax
2505 Byington-Solway Road
Knoxville, TN 37931

PLANT: NGS DATE: 5/18/15
SAMPLING TIME: (24 HR CLOCK) 1540 - 1646
SAMPLING LOCATION: 1 Stack
SAMPLING TYPE: Cutme
ANALYTICAL METHOD: 3A/5B AMB. TEMP (°F) 60
TECHNICIAN: Strano / Which / Nonnad

DMW & Emission Data Sheet

Run 3

RUN / GAS	1		2		3		AVERAGE NET VOLUME	Fo (TEST) = $\frac{20.9 - \%O_2}{\%CO_2}$	
	ACTUAL READING	NET	ACTUAL READING	NET	ACTUAL READING	NET			
CO_2							13.2		
O_2 (NET IS ACTUAL MINUS ACTUAL CO_2)							6.2	Fuel Type: COAL, RESIDUAL FUEL OIL, NATURAL GAS	Fo (calc): 1.390, 1.264

SYSTEM LEAK CHECK ✓ NA instrument
INITIAL ORSAT ANALYZER LEAK CHECK (FLUID LEVEL) ____/____ BUBBLER ____
FINAL ORSAT ANALYZER LEAK CHECK (FLUID LEVEL) ____/____ BUBBLER ____

MOISTURE

	1	2	3	4	5	6	GEL	TOTALS
FINAL (ml)	188	124	4				257	
INITIAL (ml)	100	100	6				250	
NET (ml)	88	24	4				7	123
TOTALS								123

PARTICULATE CATCH

FILTER WEIGHTS					PROBE/NOZZLE WASH				
FILTER NO.	C3B-565			WEIGHED BY	BEAKER NO.	25		Blank	WEIGHED BY
FINAL WEIGHT	0.3982			ST/RD	FINAL WEIGHT	1056269			ST/RD
INITIAL WEIGHT	0.3748				INITIAL WEIGHT	1056218			
DIFFERENCE	0.0234				DIFFERENCE	0.0051			
PARTICULATE CATCH	23.4				PARTICULATE CATCH	5.1		0.1	

TOTAL PARTICULATE CATCH (mg) 28.4

Unit 2

Catalyst Air Management, Inc.
Method 5 Isokinetic Sample Sheet

Client: **Salt River Project**
Unit Tested: **Navajo 2**
Sampling Location: Stack

Run No: **1** Date: 5/20/15 Start Time: 11:11
End Time: 12:17

DIAMETER OF NOZZLE:	0.235		STACK DIAMETER =	417	in
AREA OF NOZZLE:	3.01E-04	A_n	STACK AREA =	948.4	sq. ft.
BAROMETRIC PRESSURE:	25.10	P_{bar}	VOLUME OF MOISTURE:	125.0	V_{lc}
GAS METER Y-FACTOR:	0.99	Y	PITOT COEFFICIENT:	0.84	C_p

POINT	TIME	GAS METER	VEL HEAD	PM ORIFICE	METER TEMP IN	METER TEMP OUT	STACK TEMP	CO2%	O2%	STATIC PRESS	SDE	VEL
		446.092										
A-1	5.0	450.2	0.73	1.80	67	64	118				20.54	54.8
2	5.0	454.1	0.68	1.60	68	64	119	12.7	7.0	1.80	19.84	52.9
3	5.0	457.940	0.62	1.50	68	64	118				18.93	50.5
		457.940										
B-1	5.0	462.0	0.71	1.70	68	64	117				20.24	54.0
2	5.0	466.0	0.69	1.70	68	65	118				19.97	53.3
3	5.0	469.990	0.65	1.60	68	65	118				19.38	51.7
		469.990										
C-1	5.0	474.1	0.74	1.80	70	66	118				20.68	55.2
2	5.0	478.2	0.69	1.70	72	66	118				19.97	53.3
3	5.0	482.170	0.65	1.60	72	66	117				19.37	51.7
		482.170										
D-1	5.0	486.2	0.71	1.70	73	67	118				20.26	54.0
2	5.0	490.2	0.67	1.60	73	68	118				19.68	52.5
3	5.0	493.951	0.59	1.40	73	68	117				18.45	49.2
RESULTS	TT	VM	SQRT PIT	PM		TM	TS	CO2	O2	STATIC	SDE	VEL
	60.0	47.859	0.823	1.642		68	118	12.7	7.0	1.80	19.78	52.7
	net	net	avg	avg		avg	avg	avg	avg	avg	avg	ft/sec

P_s =	25.23	$V_{m(std)}$ =	39.939	$V_{w(std)}$ =	5.888	%M=	12.85
B_{ws} =	0.128	M_d =	30.31	M_s =	28.73	%EA=	49.30

STACK GAS VELOCITY =	52.7	AFPS	V_s
STACK GAS VELOCITY =	3,165	AFPM	
STACK GAS VOLUME =	2,015,753	DSCFM	Q_{std}
STACK GAS VOLUME =	3,001,442	ACFM	Q_a
ISOKINETIC RATIO =	104.0	%	

EMISSIONS	
	PM
Weight, mg =	18.1
GR/DSCF =	0.007
LBS/Hr =	120.801
LBS/MWh =	0.15

Catalyst Air Management, Inc.
Method 5 Isokinetic Sample Sheet

Client: **Salt River Project**
Unit Tested: **Navajo 2**
Sampling Location: Stack

Run No: **2** Date: 5/20/15 Start Time: 12:35
End Time: 13:41

DIAMETER OF NOZZLE:	0.235		STACK DIAMETER =	417	in
AREA OF NOZZLE:	3.01E-04	A_n	STACK AREA =	948.4	sq. ft.
BAROMETRIC PRESSURE:	25.10	P_{bar}	VOLUME OF MOISTURE:	139.0	V_{lc}
GAS METER Y-FACTOR:	0.99	Y	PITOT COEFFICIENT:	0.84	C_p

POINT	TIME	GAS METER	VEL HEAD	PM ORIFICE	METER TEMP IN	METER TEMP OUT	STACK TEMP	CO2%	O2%	STATIC PRESS	SDE	VEL
		494.505										
D-1	5.0	498.6	0.70	1.70	71	68	117	12.9	6.9		20.10	53.7
2	5.0	502.4	0.67	1.60	74	69	117			1.80	19.66	52.6
3	5.0	506.172	0.60	1.40	72	69	116				18.59	49.7
		506.172										
C-1	5.0	510.3	0.74	1.80	72	69	117				20.66	55.3
2	5.0	514.4	0.70	1.70	74	69	116				20.08	53.7
3	5.0	518.224	0.63	1.50	74	69	117				19.07	51.0
		518.224										
B-1	5.0	522.3	0.71	1.70	74	70	116				20.22	54.1
2	5.0	526.4	0.70	1.70	75	70	117				20.10	53.7
3	5.0	530.383	0.65	1.60	76	71	117				19.37	51.8
		530.383										
A-1	5.0	534.4	0.70	1.70	76	71	118				20.11	53.8
2	5.0	538.4	0.68	1.60	78	71	117				19.81	53.0
3	5.0	542.272	0.63	1.50	76	71	117				19.07	51.0
RESULTS	TT	VM	SQRT PIT	PM		TM	TS	CO2	O2	STATIC	SDE	VEL
	60.0	47.767	0.822	1.625		72	117	12.9	6.9	1.80	19.74	52.8
	net	net	avg	avg		avg	avg	avg	avg	avg	avg	ft/sec

P_s =	25.23	$V_{m(std)}$ =	39.541	$V_{w(std)}$ =	6.547	%M=	14.21
B_{ws} =	0.142	M_d =	30.34	M_s =	28.59	%EA=	48.34

STACK GAS VELOCITY =	52.8	AFPS	V_s
STACK GAS VELOCITY =	3,166	AFPM	
STACK GAS VOLUME =	1,988,735	DSCFM	Q_{std}
STACK GAS VOLUME =	3,002,865	ACFM	Q_a
ISOKINETIC RATIO =	104.4	%	

EMISSIONS

	PM
Weight, mg =	27.8
GR/DSCF =	0.011
LBS/Hr =	184.891
LBS/MWh =	0.23

Catalyst Air Management, Inc.

Method 5 Isokinetic Sample Sheet

Client: **Salt River Project**
Unit Tested: **Navajo 2**
Sampling Location: Stack

Run No: **3** Date: 5/20/15 Start Time: 14:06
End Time: 15:13

DIAMETER OF NOZZLE:	0.235		STACK DIAMETER =	417	in
AREA OF NOZZLE:	3.01E-04	A_n	STACK AREA =	948.4	sq. ft.
BAROMETRIC PRESSURE:	25.10	P_{bar}	VOLUME OF MOISTURE:	136.0	V_{lc}
GAS METER Y-FACTOR:	0.99	Y	PITOT COEFFICIENT:	0.84	C_p

POINT	TIME	GAS METER	VEL HEAD	PM ORIFICE	METER TEMP IN	METER TEMP OUT	STACK TEMP.	CO2%	O2%	STATIC PRESS.	SDE	VEL
		542.348										
A-1	5.0	546.1	0.70	1.70	73	72	117				20.10	53.7
2	5.0	550.4	0.67	1.60	74	72	117	12.9	6.7	1.80	19.66	52.6
3	5.0	554.319	0.63	1.50	75	72	117				19.07	51.0
		554.319										
B-1	5.0	558.3	0.73	1.80	75	72	117				20.52	54.9
2	5.0	562.6	0.69	1.70	75	72	118				19.97	53.4
3	5.0	566.407	0.58	1.40	76	72	117				18.29	48.9
		566.407										
C-1	5.0	570.6	0.70	1.70	76	72	118				20.11	53.8
2	5.0	574.4	0.67	1.60	76	72	117				19.66	52.6
3	5.0	578.312	0.58	1.40	76	72	117				18.29	48.9
		578.312										
D-1	5.0	582.3	0.69	1.70	76	72	117				19.95	53.3
2	5.0	586.3	0.65	1.60	77	72	118				19.38	51.8
3	5.0	590.111	0.57	1.40	77	73	117				18.14	48.5
RESULTS	TT	VM	SQRT PIT	PM		TM	TS	CO2	O2	STATIC	SDE	VEL
	60.0	47.763	0.809	1.592		74	117	12.9	6.7	1.80	19.43	51.9
	net	net	avg	avg		avg	avg	avg	avg	avg	avg	ft/sec

P_s =	25.23	$V_{m(std)}$ =	39.405	$V_{w(std)}$ =	6.406	%M=	13.98
B_{ws} =	0.140	M_d =	30.33	M_s =	28.61	%EA=	46.13

STACK GAS VELOCITY =	51.9	AFPS	V_s
STACK GAS VELOCITY =	3,116	AFPM	
STACK GAS VOLUME =	1,960,790	DSCFM	Q_{std}
STACK GAS VOLUME =	2,955,154	ACFM	Q_a
ISOKINETIC RATIO =	105.5	%	

EMISSIONS

	PM
Weight, mg =	21.6
GR/DSCF =	0.008
LBS/Hr =	142.064
LBS/MWh =	0.17

Catalyst Air Management, Inc.

MOISTURE DETERMINATION

Run:		1	2	3
Impinger				
100ml	1	100.0	100.0	100.0
		194.0	206.0	200.0
		94.0	**106.0**	**100.0**
100ml	2	100.0	100.0	100.0
		120.0	120.0	124.0
		20.0	**20.0**	**24.0**
0	3	0.0	0.0	0.0
		2.0	2.0	2.0
		2.0	**2.0**	**2.0**
GeL	5	250.0	250.0	250.0
250g		259.0	261.0	260.0
		9.0	**11.0**	**10.0**
	Total mg:	**125.0**	**139.0**	**136.0**

CATALYST AIR MANAGEMENT Inc.
CALIBRATION DATA

CLIENT: Salt River Project
PLANT: Navajo 2
TEST: 3A
LOCATION: Stack

RUN #: 1-3
LOAD LEVEL: High
DATE: 5/20/2015

GAS UNITS	ANALYZER SCALE	CYLINDER VALUE	ANALYZER VALUE	DIFF PPM	% SPAN	Pass Yes\No
O2, %		0.00	0.00	0.00	0.00	**YES**
O2, %	**25**	11.83	11.89	0.06	0.28	**YES**
O2, %		21.78	21.71	0.07	0.32	**YES**
CO2, %		0.00	0.00	0.00	0.00	**YES**
CO2, %	**20**	10.05	10.12	0.07	0.42	**YES**
CO2, %		16.70	16.55	0.15	0.90	**YES**

RUN 1
SYSTEM CALIBRATION BIAS AND DRIFT DATA

GAS UNITS	ANALYZER VALUE	PRE-TEST CHECK	% SPAN	Pass YES\NO	POST-TEST CHECK	% SPAN	% DRIFT	Pass YES\NO
O2, %	0.00	0.00	0.00	**YES**	0.00	0.00	0.00	**YES**
O2, %	11.89	11.85	0.18	**YES**	11.92	0.14	0.32	**YES**
CO2, %	0.00	0.00	0.00	**YES**	0.06	0.36	0.36	**YES**
CO2, %	10.12	10.15	0.18	**YES**	10.09	0.18	0.36	**YES**

UNCORRECTED ANALYZER VALUES

	DRY
O2, %	7.04
CO2, %	12.81

ANALYZER VALUES CORRECTED FOR DRIFT

	DRY
O2, %	7.0
CO2, %	12.7

RUN 2
SYSTEM CALIBRATION BIAS AND DRIFT DATA

GAS UNITS	ANALYZER VALUE	PRE-TEST CHECK	% SPAN	Pass YES\NO	POST-TEST CHECK	% SPAN	% DRIFT	Pass YES\NO
O2, %	0.00	0.00	0.00	**YES**	0.00	0.00	0.00	**YES**
O2, %	11.89	11.92	0.14	**YES**	11.94	0.23	0.09	**YES**
CO2, %	0.00	0.06	0.36	**YES**	0.07	0.42	0.06	**YES**
CO2, %	10.12	10.09	0.18	**YES**	10.07	0.30	0.12	**YES**

UNCORRECTED ANALYZER VALUES

	DRY
O2, %	6.97
CO2, %	12.88

ANALYZER VALUES CORRECTED FOR DRIFT

	DRY
O2, %	6.9
CO2, %	12.9

RUN 3
SYSTEM CALIBRATION BIAS AND DRIFT DATA

GAS UNITS	ANALYZER VALUE	PRE-TEST CHECK	% SPAN	Pass YES\NO	POST-TEST CHECK	% SPAN	% DRIFT	Pass YES\NO
O2, %	0.00	0.00	0.00	**YES**	0.00	0.00	0.00	**YES**
O2, %	11.89	11.94	0.23	**YES**	11.90	0.05	0.18	**YES**
CO2, %	0.00	0.07	0.42	**YES**	0.06	0.36	0.06	**YES**
CO2, %	10.12	10.07	0.30	**YES**	10.02	0.60	0.30	**YES**

UNCORRECTED ANALYZER VALUES

	DRY
O2, %	6.72
CO2, %	12.87

ANALYZER VALUES CORRECTED FOR DRIFT

	DRY
O2, %	6.7
CO2, %	12.9

CATALYST AIR MANAGEMENT Inc.

CLIENT: Salt River Project
UNIT: Navajo 2

RUN #: 1-3
LOAD LEVEI High
DATE: 5/20/2015

Run 1			
DATE	TIME	O2	CO2
5/20/2015	11:05	7.16	12.7
5/20/2015	11:06	7.13	12.72
5/20/2015	11:07	6.99	12.84
5/20/2015	11:08	6.94	12.88
5/20/2015	11:09	6.99	12.84
5/20/2015	11:10	6.93	12.9
5/20/2015	11:11	7	12.84
5/20/2015	11:12	6.99	12.85
5/20/2015	11:13	7	12.84
5/20/2015	11:14	7.07	12.78
5/20/2015	11:15	7.18	12.68
5/20/2015	11:16	7.17	12.69
5/20/2015	11:17	7.11	12.74
5/20/2015	11:18	7.04	12.79
5/20/2015	11:19	7.11	12.74
5/20/2015	11:20	7.22	12.65
5/20/2015	11:21	7.24	12.63
5/20/2015	11:22	7.18	12.68
5/20/2015	11:23	7.13	12.73
5/20/2015	11:24	7.16	12.7
5/20/2015	11:25	7.06	12.78
5/20/2015	11:26	6.99	12.84
5/20/2015	11:45	7.16	12.76
5/20/2015	11:46	7.04	12.82
5/20/2015	11:47	7.13	12.74
5/20/2015	11:48	7.13	12.75
5/20/2015	11:49	7.06	12.81
5/20/2015	11:50	6.99	12.88
5/20/2015	11:51	6.95	12.92
5/20/2015	11:52	6.97	12.9
5/20/2015	11:53	6.79	13.05
5/20/2015	11:54	6.69	13.14
5/20/2015	11:55	6.88	12.98
5/20/2015	11:56	6.99	12.88
5/20/2015	11:57	7.15	12.74
5/20/2015	11:58	7.23	12.67
5/20/2015	11:59	7.14	12.74
5/20/2015	12:00	7.13	12.75
5/20/2015	12:01	7.08	12.8
5/20/2015	12:02	7.01	12.85
5/20/2015	12:03	6.9	12.95
5/20/2015	12:04	6.91	12.94
5/20/2015	12:05	6.92	12.93
5/20/2015	12:06	6.91	12.94
		7.04	12.81

Run 2			
DATE	TIME	O2	CO2
5/20/2015	12:30	7.01	12.85
5/20/2015	12:31	7.07	12.8
5/20/2015	12:32	7.16	12.72
5/20/2015	12:33	7.05	12.81
5/20/2015	12:34	6.94	12.91
5/20/2015	12:35	6.83	13
5/20/2015	12:36	6.84	12.99
5/20/2015	12:37	6.76	13.05
5/20/2015	12:38	6.84	13
5/20/2015	12:39	7.03	12.82
5/20/2015	12:40	6.96	12.87
5/20/2015	12:41	6.99	12.84
5/20/2015	12:42	7.12	12.74
5/20/2015	12:43	7.3	12.58
5/20/2015	12:44	7.26	12.61
5/20/2015	12:45	7.14	12.71
5/20/2015	12:46	6.94	12.89
5/20/2015	12:47	6.91	12.92
5/20/2015	12:48	7	12.84
5/20/2015	12:49	6.91	12.92
5/20/2015	12:50	6.85	12.98
5/20/2015	12:51	6.85	12.98
5/20/2015	13:09	6.92	12.91
5/20/2015	13:10	7.07	12.79
5/20/2015	13:11	7.25	12.64
5/20/2015	13:12	7.21	12.68
5/20/2015	13:13	7.1	12.77
5/20/2015	13:14	7.19	12.7
5/20/2015	13:15	7.18	12.71
5/20/2015	13:16	7.01	12.86
5/20/2015	13:17	6.94	12.93
5/20/2015	13:18	6.9	12.97
5/20/2015	13:19	6.83	13.02
5/20/2015	13:20	6.82	13.03
5/20/2015	13:21	6.82	13.03
5/20/2015	13:22	6.77	13.07
5/20/2015	13:23	6.89	12.97
5/20/2015	13:24	7.05	12.82
5/20/2015	13:25	6.98	12.88
5/20/2015	13:26	6.75	13.08
5/20/2015	13:27	6.75	13.09
5/20/2015	13:28	6.83	13.02
5/20/2015	13:29	6.79	13.05
5/20/2015	13:30	6.77	13.06
		6.97	12.88

Run 3			
DATE	TIME	O2	CO2
5/20/2015	14:06	6.48	13.05
5/20/2015	14:07	6.54	13.04
5/20/2015	14:08	6.54	13.03
5/20/2015	14:09	6.52	13.06
5/20/2015	14:10	6.6	12.99
5/20/2015	14:11	6.77	12.83
5/20/2015	14:12	6.86	12.75
5/20/2015	14:13	6.98	12.65
5/20/2015	14:14	6.99	12.64
5/20/2015	14:15	7.03	12.6
5/20/2015	14:16	7.04	12.59
5/20/2015	14:17	6.87	12.72
5/20/2015	14:18	6.75	12.83
5/20/2015	14:19	6.82	12.77
5/20/2015	14:20	6.8	12.79
5/20/2015	14:21	6.78	12.81
5/20/2015	14:22	6.74	12.84
5/20/2015	14:23	6.61	12.96
5/20/2015	14:24	6.61	12.97
5/20/2015	14:25	6.94	12.68
5/20/2015	14:26	6.88	12.74
5/20/2015	14:27	6.89	12.72
5/20/2015	14:45	6.78	12.8
5/20/2015	14:46	6.67	12.89
5/20/2015	14:47	6.61	12.96
5/20/2015	14:48	6.65	12.92
5/20/2015	14:49	6.68	12.91
5/20/2015	14:50	6.71	12.88
5/20/2015	14:51	6.69	12.9
5/20/2015	14:52	6.74	12.86
5/20/2015	14:53	6.81	12.79
5/20/2015	14:54	6.88	12.74
5/20/2015	14:55	6.87	12.74
5/20/2015	14:56	6.8	12.8
5/20/2015	14:57	6.65	12.93
5/20/2015	14:58	6.57	13.01
5/20/2015	14:59	6.48	13.09
5/20/2015	15:00	6.59	13.01
5/20/2015	15:01	6.63	12.96
5/20/2015	15:02	6.53	13.05
5/20/2015	15:03	6.53	13.06
5/20/2015	15:04	6.58	13.01
5/20/2015	15:05	6.57	13.01
5/20/2015	15:06	6.51	13.07
		6.72	12.87

CATALYST AIR MANAGEMENT, INC. (865) 531-0075
Air Quality Testing Services (865) 531-0750 Fax
2505 Byington Solway Road
Knoxville, TN 37931

Field Isokinetic Data Sheet

Client	SRP	Pitot No.	CAM10-01	Filter Number	C38-575
Plant	Navajo	Nozzle No.	CAM210	Initial Leak (Samp.)	0.000@5"
Location	Unit 2 Stack	Nozzle Dn.	.235	Initial Leak (Pitot)	ok@6"
Test	M5	Stack TC No.	P14		ok@7"
Run	1	P_B	25.10		
Date	5-20-15	Ambient Temp	64°F	Final Leak (Samp.)	0.000@6"
Meter Box	020	Static	+1.8	Final Leak (Pitot)	ok@6"
ΔH	1.63 | Y_1 .99				ok@5"

K= 2.4

POINT	TIME ACTUAL	TIME RUN	METER	ΔP	Δh	STACK °F	PROBE °F	Filter °F	METER °F IN	METER °F OUT	EXIT °F	VAC
	11:11		446.092									
A1		5	450.2	.73	1.8	118	320	318	67	64	49	3.0
2		10	454.1	.68	1.6	119	320	320	68	64	46	3.0
3	11:26	15	457.940	.62	1.5	118	318	320	68	64	44	3.0
	11:28		457.940									
B1		20	462.0	.71	1.7	117	320	321	68	64	44	3.0
2		25	466.0	.69	1.7	118	320	320	68	65	44	3.0
3	11:43	30	469.990	.65	1.6	118	320	314	68	65	46	3.0
	11:45		469.990									
C1		35	474.1	.74	1.8	118	320	322	70	66	44	3.0
2		40	478.2	.69	1.7	118	320	312	72	66	45	3.0
3	12:00	45	482.170	.65	1.6	117	320	325	72	66	47	3.0
	12:02		482.170									
D1		50	486.2	.71	1.7	118	320	321	73	67	47	3.0
2		55	490.2	.67	1.6	118	320	316	73	68	48	3.0
3	12:17	60	493.951	.59	1.4	117	320	318	73	68	50	3.0

Operator: KS Imp 1: 194 Imp 2: 120 Imp 3: 2 Gel: 259

Comments:

CATALYST AIR MANAGEMENT, INC. (865) 531-0075
Air Quality Testing Services (865) 531-0750 Fax
2505 Byington-Solway Road
Knoxville, TN 37931

PLANT: NGS DATE: 5/20/15
SAMPLING TIME: (24 HR CLOCK) 1111 - 1217
SAMPLING LOCATION: 2 Stack
SAMPLING TYPE: Cutms
ANALYTICAL METHOD: 3A/5B AMB. TEMP (°F) 64
TECHNICIAN: Strano / White / Nannet

DMW & Emission Data Sheet

Run 1

RUN / GAS	1		2		3		AVERAGE WET VOLUME	Fo (TEST) = 20.9 − %O2 / %CO2	
	ACTUAL READING	NET	ACTUAL READING	NET	ACTUAL READING	NET			
CO_2							12.7		
O_2 (NET IS ACTUAL MINUS ACTUAL CO_2)							7.0	Fuel Type: COAL, RESIDUAL FUEL OIL, NATURAL GAS	Fo (calc): 1.560, 1.594, 1.714

SYSTEM LEAK CHECK ok NA retest
INITIAL ORSAT ANALYZER LEAK CHECK (FLUID LEVEL) ____/____ BUBBLER ____
FINAL ORSAT ANALYZER LEAK CHECK (FLUID LEVEL) ____/____ BUBBLER ____

MOISTURE

	1	2	3	4	5	6	GEL	TOTALS
FINAL (ml)	194	120	2				259	
INITIAL (ml)	100	100	0				250	
NET (ml)	94	20	2				9	125
TOTALS								125

PARTICULATE CATCH

FILTER WEIGHTS					PROBE/NOZZLE WASH				
FILTER NO.	CSB 575			WEIGHED BY	BEAKER NO.	33		Blank	WEIGHED BY
FINAL WEIGHT	0.3864			ST/RD	FINAL WEIGHT	103.2199		99.4093	ST/RD
INITIAL WEIGHT	0.3768				INITIAL WEIGHT	103.2113		99.4092	
DIFFERENCE	0.0096				DIFFERENCE	0.0086		0.0001	
PARTICULATE CATCH	9.6				PARTICULATE CATCH	8.6		0.1	

TOTAL PARTICULATE CATCH (mg) 18.1

CATALYST AIR MANAGEMENT, INC.
Air Quality Testing Services
2505 Byington Solway Road
Knoxville, TN 37931
(865) 531-0075
(865) 531-0750 Fax

Field Isokinetic Data Sheet

Client	SRP	Pitot No.	CAM ~~10 PI~~ 137	Filter Number	C3B-576
Plant	Navajo	Nozzle No.	CAM ~~210~~ ~~137~~ 203	Initial Leak (Samp.)	0.000@6"
Location	Unit 2 Stack	Nozzle Dn.	.235	Initial Leak (Pitot)	OK@6"
Test	M5	Stack TC No.	~~P19~~ 30		OK@5"
Run	2	P_B	25.10		
Date	5-20-15	Ambient Temp	64°F	Final Leak (Samp.)	0.000@7"
Meter Box	020	Static	+1.8	Final Leak (Pitot)	OK@4.2
ΔH	1.63 | Y, .99				OK@3.8

POINT	TIME ACTUAL	RUN	METER	ΔP	Δh	STACK °F	PROBE °F	Filter °F	METER °F IN	METER °F OUT	EXIT °F	VAC
	12:55		494.505									
D1		5	498.6	.70	1.7	117	309	316	71	68	53	4.0
2		10	502.4	.67	1.6	117	306	322	74	69	46	4.0
3	12:50	15	506.172	.60	1.4	116	315	324	72	69	49	4.0
	12:52		506.172									
C1		20	510.3	.74	1.8	117	318	321	72	69	48	4.5
2		25	514.4	.70	1.7	116	318	318	74	69	48	4.0
3	13:07	30	518.224	.63	1.5	117	317	320	74	69	49	4.0
	13:09		518.224									
B1		35	522.3	.71	1.7	116	320	324	74	70	48	4.5
2		40	526.4	.70	1.7	117	319	325	75	70	50	4.5
3	13:24	45	530.383	.65	1.6	117	315	322	76	71	52	4.5
	13:26		530.383									
A1		50	534.4	.70	1.7	118	317	319	76	71	49	4.5
2		55	538.4	.68	1.6	117	319	317	78	71	49	4.5
3	13:41	60	542.272	.63	1.5	117	318	320	76	71	53	4.5

Operator: LW Imp 1: 206 Imp 2: 120 Imp 3: 2 Gel: 261

Comments:

CATALYST AIR MANAGEMENT, INC. (865) 531-0075
Air Quality Testing Services (865) 531-0750 Fax
2505 Byington-Solway Road
Knoxville, TN 37931

PLANT: NGS DATE: 5/20/15
SAMPLING TIME: (24 HR CLOCK) 1235 - 1341
SAMPLING LOCATION: 2 Stack
SAMPLING TYPE: Catrus
ANALYTICAL METHOD: 3.4/5B AMB. TEMP (°F) 64
TECHNICIAN: Whitt / Strong / Norris

DMW & Emission Data Sheet

Run 2

RUN / GAS	1		2		3		AVERAGE NET VOLUME	Fo (TEST) = $\frac{20.9 - \%O_2}{\%CO_2}$	
	ACTUAL READING	NET	ACTUAL READING	NET	ACTUAL READING	NET			
CO_2							12.9		
O_2 (NET IS ACTUAL MINUS ACTUAL CO_2)							6.9	Fuel Type COAL RESIDUAL FUEL OIL NATURAL GAS	Fo (calc) 1.208 1.116

SYSTEM LEAK CHECK ok
INITIAL ORSAT ANALYZER LEAK CHECK (FLUID LEVEL) ____/____ BUBBLER ____ NA not tl
FINAL ORSAT ANALYZER LEAK CHECK (FLUID LEVEL) ____/____ BUBBLER ____

MOISTURE

	1	2	3	4	5	6	GEL	TOTALS
FINAL (ml)	206	120	2				261	
INITIAL (ml)	100	100	0				250	
NET (ml)	106	20	2				11	139
TOTALS								139

PARTICULATE CATCH

FILTER WEIGHTS

FILTER NO.	C313-576			WEIGHED BY
FINAL WEIGHT	0.3816			ST/RD
INITIAL WEIGHT	0.3749			
DIFFERENCE	0.0067			
PARTICULATE CATCH	6.7			

PROBE/NOZZLE WASH

BEAKER NO.	26		Blank	WEIGHED BY
FINAL WEIGHT	98.0317			ST/RD
INITIAL WEIGHT	98.0105			
DIFFERENCE	0.0212			
PARTICULATE CATCH	21.2		0.1	

TOTAL PARTICULATE CATCH (mg) 27.8

CATALYST AIR MANAGEMENT, INC. (865) 531-0075
Air Quality Testing Services (865) 531-0750 Fax
2505 Byington Solway Road
Knoxville, TN 37931

Field Isokinetic Data Sheet

Client	SRP	Pitot No.	CAM-10-01	Filter Number	C3B 547
Plant	NAVAJO	Nozzle No.	CAM 210	Initial Leak (Samp.)	0.000@5"
Location	UNIT 2 STACK	Nozzle Dn.	0.235	Initial Leak (Pitot)	OK@6"
Test	M5	Stack TC No.	P14		OK@6"
Run	3	P_B	25.10		
Date	5-20-15	Ambient Temp	73°F	Final Leak (Samp.)	0.000@5"
Meter Box	020	Static	+1.8	Final Leak (Pitot)	OK@7"
ΔH	1.63 | Y_i .99				OK@6"

POINT	TIME ACTUAL	TIME RUN	METER	ΔP	Δh	STACK °F	PROBE °F	Filter °F	METER °F IN	METER °F OUT	EXIT °F	VAC
	14:06		542.348									
A1		5	546.1	.70	1.7	117	320	302	73	72	49	5.0
2		10	550.4	.67	1.6	117	320	315	74	72	44	5.0
3	14:21	15	554.319	.63	1.5	117	320	307	75	72	47	5.0
	14:23		554.319									
B1		20	558.3	.73	1.8	117	320	319	75	72	49	5.0
2		25	562.6	.69	1.7	118	320	320	75	72	49	5.0
3	14:38	30	566.407	.58	1.4	117	320	312	76	72	51	5.0
	14:40		566.407									
C1		35	570.6	.70	1.7	118	319	315	76	72	54	5.0
2		40	574.4	.67	1.6	117	320	320	76	72	50	5.0
3	14:55	45	578.312	.58	1.4	117	320	317	76	72	48	5.0
	14:58		578.312									
D1		50	582.3	.69	1.7	117	320	318	76	72	50	5.0
2		55	586.3	.65	1.6	118	319	311	77	72	50	5.0
3	15:13	60	590.111	.57	1.4	117	320	321	77	73	50	5.0

Operator: KS Imp 1: 200 Imp 2: 124 Imp 3: 2 Gel: 260

Comments:

CATALYST AIR MANAGEMENT, INC. (865) 531-0075
Air Quality Testing Services (865) 531-0750 Fax
2505 Byington-Solway Road
Knoxville, TN 37931

PLANT: NGS DATE: 5/20/15
SAMPLING TIME: (24 HR CLOCK) 1406 - 1513
SAMPLING LOCATION: 2 Stack
SAMPLING TYPE: Continuous
ANALYTICAL METHOD: 3A/5B AMB. TEMP. (°F) 73
TECHNICIAN: Stamm / Which / Norred

DMW & Emission Data Sheet

Run 3

RUN / GAS	1 ACTUAL READING	1 NET	2 ACTUAL READING	2 NET	3 ACTUAL READING	3 NET	AVERAGE NET VOLUME	Fo (TEST) = 20.9 − %O2 / %CO2	
CO_2							12.9		
O_2 (NET IS ACTUAL MINUS ACTUAL CO_2)							6.7	Fuel Type: COAL, RESIDUAL FUEL OIL, NATURAL GAS	Fo (calc): 1.394, 1.716

SYSTEM LEAK CHECK ok NA natural
INITIAL ORSAT ANALYZER LEAK CHECK (FLUID LEVEL) ____/____ BUBBLER ____
FINAL ORSAT ANALYZER LEAK CHECK (FLUID LEVEL) ____/____ BUBBLER ____

MOISTURE

	1	2	3	4	5	6	GEL	TOTALS
FINAL (ml)	200	124	2				260	
INITIAL (ml)	100	100	0				250	
NET (ml)	100	24	2				10	136
TOTALS								136

PARTICULATE CATCH

FILTER WEIGHTS

FILTER NO.	CBB-577			WEIGHED BY
FINAL WEIGHT	0.3835			ST/RD
INITIAL WEIGHT	0.3754			
DIFFERENCE	0.0081			
PARTICULATE CATCH	8.1			

PROBE/NOZZLE WASH

BEAKER NO.	30		Blank	WEIGHED BY
FINAL WEIGHT	100.6416			ST/RD
INITIAL WEIGHT	100.6280			
DIFFERENCE	0.0136			
PARTICULATE CATCH	13.6		0.1	

TOTAL PARTICULATE CATCH (mg) 21.6

Unit 3

Catalyst Air Management, Inc.

Method 5 Isokinetic Sample Sheet

Client: **Salt River Project**
Unit Tested: **Navajo 3**
Sampling Location: Stack

Run No: **1** Date: 5/21/15 Start Time: 10:20
End Time: 12:26

DIAMETER OF NOZZLE:	0.235		STACK DIAMETER =	417	in
AREA OF NOZZLE:	3.01E-04	A_n	STACK AREA =	948.4	sq. ft.
BAROMETRIC PRESSURE:	25.03	P_{bar}	VOLUME OF MOISTURE:	130.0	V_{lc}
GAS METER Y-FACTOR:	0.99	Y	PITOT COEFFICIENT:	0.84	C_p

POINT	TIME	GAS METER	VEL HEAD	PM ORIFICE	METER TEMP IN	METER TEMP OUT	STACK TEMP	CO2%	O2%	STATIC PRESS	SDE	VEL
		849.688										
A-1	5.0	853.4	0.68	1.60	74	70	117				19.81	53.0
2	5.0	857.2	0.64	1.50	74	70	117	13.4	5.9	1.60	19.22	51.4
3	5.0	861.096	0.55	1.30	74	70	117				17.81	47.7
		861.096										
B-1	5.0	864.0	0.69	1.70	73	70	116				19.94	53.3
2	5.0	869.0	0.64	1.60	73	70	116				19.20	51.4
3	5.0	872.810	0.59	1.40	74	70	117				18.45	49.4
		872.810										
C-1	5.0	875.5	0.69	1.70	72	71	116				19.94	53.3
2	5.0	880.7	0.65	1.60	73	71	116				19.35	51.8
3	5.0	884.423	0.56	1.30	74	71	116				17.96	48.0
		884.423										
D-1	5.0	888.2	0.70	1.70	72	70	116				20.08	53.7
2	5.0	892.0	0.65	1.60	74	70	117				19.37	51.8
3	5.0	895.638	0.57	1.30	74	70	117				18.14	48.5
RESULTS	TT	VM	SQRT PIT	PM		TM	TS	CO2	O2	STATIC	SDE	VEL
	60.0	45.950	0.796	1.525		72	117	13.4	5.9	1.60	19.10	51.1
	net	net	avg	avg		avg	avg	avg	avg	avg	avg	ft/sec

P_s =	25.15	$V_{m(std)}$ =	37.936	$V_{w(std)}$ =	6.123	%M=	13.90
B_{ws} =	0.139	M_d =	30.38	M_s =	28.66	%EA=	38.30

STACK GAS VELOCITY =	51.1	AFPS	V_s
STACK GAS VELOCITY =	3,066	AFPM	
STACK GAS VOLUME =	1,927,407	DSCFM	Q_{std}
STACK GAS VOLUME =	2,907,950	ACFM	Q_a
ISOKINETIC RATIO =	103.3	%	

EMISSIONS

	PM
Weight, mg =	14.1
GR/DSCF =	0.006
LBS/Hr =	94.731
LBS/MWh =	0.12

Catalyst Air Management, Inc.
Method 5 Isokinetic Sample Sheet

Client: **Salt River Project**
Unit Tested: **Navajo 3**
Sampling Location: Stack

Run No: **2** Date: 5/21/15 Start Time: 15:34
End Time: 16:40

DIAMETER OF NOZZLE:	0.235		STACK DIAMETER =	417	in
AREA OF NOZZLE:	3.01E-04	A_n	STACK AREA =	948.4	sq. ft.
BAROMETRIC PRESSURE:	25.03	P_{bar}	VOLUME OF MOISTURE:	133.0	V_{lc}
GAS METER Y-FACTOR:	0.99	Y	PITOT COEFFICIENT:	0.84	C_p

POINT	TIME	GAS METER	VEL HEAD	PM ORIFICE	METER TEMP IN	METER TEMP OUT	STACK TEMP	CO2%	O2%	STATIC PRESS	SDE	VEL
		896.975										
D-1	5.0	901.2	0.71	1.70	70	70	117				20.24	54.2
2	5.0	905.1	0.67	1.60	70	69	117	13.2	5.9	1.60	19.66	52.6
3	5.0	908.841	0.57	1.40	71	70	116				18.12	48.5
		908.841										
C-1	5.0	912.8	0.68	1.60	72	70	116				19.79	53.0
2	5.0	916.7	0.66	1.60	73	70	116				19.50	52.2
3	5.0	920.430	0.57	1.40	73	71	116				18.12	48.5
		920.430										
B-1	5.0	924.5	0.69	1.70	72	71	116				19.94	53.4
2	5.0	928.4	0.64	1.50	72	71	116				19.20	51.4
3	5.0	932.093	0.58	1.40	73	71	117				18.29	49.0
		932.093										
A-1	5.0	936.0	0.68	1.60	73	71	117				19.81	53.0
2	5.0	940.0	0.65	1.60	73	71	116				19.35	51.8
3	5.0	943.579	0.56	1.30	73	71	116				17.96	48.1
RESULTS	TT	VM	SQRT PIT	PM		TM	TS	CO2	O2	STATIC	SDE	VEL
	60.0	46.604	0.798	1.533		71	116	13.2	5.9	1.60	19.16	51.3
	net	net	avg	avg		avg	avg	avg	avg	avg	avg	ft/sec

P_s =	25.15	$V_{m(std)}$ =	38.516	$V_{w(std)}$ =	6.264	%M=	13.99
B_{ws} =	0.140	M_d =	30.35	M_s =	28.62	%EA=	38.17

STACK GAS VELOCITY =	51.3	AFPS	V_s
STACK GAS VELOCITY =	3,078	AFPM	
STACK GAS VOLUME =	1,933,312	DSCFM	Q_{std}
STACK GAS VOLUME =	2,919,123	ACFM	Q_a
ISOKINETIC RATIO =	104.6	%	

EMISSIONS

	PM
Weight, mg =	16.0
GR/DSCF =	0.006
LBS/Hr =	106.135
LBS/MWh =	0.13

Catalyst Air Management, Inc.

Method 5 Isokinetic Sample Sheet

Client: **Salt River Project**
Unit Tested: **Navajo 3**
Sampling Location: Stack

Run No: **3** Date: 5/21/15 Start Time: 5:10
End Time: 6:15

DIAMETER OF NOZZLE:	0.235		STACK DIAMETER =	417	in
AREA OF NOZZLE:	3.01E-04	A_n	STACK AREA =	948.4	sq. ft.
BAROMETRIC PRESSURE:	25.03	P_{bar}	VOLUME OF MOISTURE:	132.0	V_{lc}
GAS METER Y-FACTOR:	0.99	Y	PITOT COEFFICIENT:	0.84	C_p

POINT	TIME	GAS METER	VEL HEAD	PM ORIFICE	METER TEMP IN	METER TEMP OUT	STACK TEMP.	CO2%	O2%	STATIC PRESS.	SDE	VEL
		943.820										
A-1	5.0	947.9	0.69	1.70	71	71	116				19.94	53.4
2	5.0	951.7	0.64	1.50	72	71	116	13.3	6.0	1.60	19.20	51.4
3	5.0	955.210	0.56	1.30	72	71	116				17.96	48.1
		955.210										
B-1	5.0	959.3	0.70	1.70	73	71	116				20.08	53.7
2	5.0	963.1	0.64	1.50	74	71	116				19.20	51.4
3	5.0	966.802	0.59	1.40	74	71	116				18.43	49.3
		966.802										
C-1	5.0	970.8	0.69	1.70	74	71	117				19.95	53.4
2	5.0	974.6	0.64	1.50	74	71	116				19.20	51.4
3	5.0	978.153	0.55	1.30	75	72	116				17.80	47.6
		978.153										
D-1	5.0	982.2	0.69	1.70	75	72	116				19.94	53.4
2	5.0	986.1	0.65	1.60	75	72	115				19.33	51.7
3	5.0	989.653	0.56	1.30	76	73	116				17.96	48.1
RESULTS	TT	VM	SQ RT PIT	PM		TM	TS	CO2	O2	STATIC	SDE	VEL
	60.0	45.833	0.795	1.517		73	116	13.3	6.0	1.60	19.08	51.1
	net	net	avg	avg		avg	avg	avg	avg	avg	avg	ft/sec

P_s =	25.15	$V_{m(std)}$ =	37.785	$V_{w(std)}$ =	6.217	%M=	14.13
B_{ws} =	0.141	M_d =	30.37	M_s =	28.62	%EA=	39.20

STACK GAS VELOCITY =	51.1	AFPS	V_s
STACK GAS VELOCITY =	3,065	AFPM	
STACK GAS VOLUME =	1,923,000	DSCFM	Q_{std}
STACK GAS VOLUME =	2,906,614	ACFM	Q_a
ISOKINETIC RATIO =	103.2	%	

EMISSIONS

	PM
Weight, mg =	15.3
GR/DSCF =	0.006
LBS/Hr =	102.968
LBS/MWh =	0.13

Catalyst Air Management, Inc.

MOISTURE DETERMINATION

Run:		1	2	3
Impinger				
100ml	1	100.0	100.0	100.0
		208.0	200.0	202.0
		108.0	**100.0**	**102.0**
100ml	2	100.0	100.0	100.0
		114.0	120.0	122.0
		14.0	**20.0**	**22.0**
0	3	0.0	0.0	0.0
		2.0	2.0	2.0
		2.0	**2.0**	**2.0**
GeL	5	250.0	250.0	250.0
250g		256.0	261.0	256.0
		6.0	**11.0**	**6.0**
	Total mg:	**130.0**	**133.0**	**132.0**

CATALYST AIR MANAGEMENT Inc.
CALIBRATION DATA

CLIENT: Salt River Project
PLANT: Navajo 3
TEST: 3A
LOCATION: Stack

RUN #: 1-3
LOAD LEVEL: High
DATE: 5/21/2015

GAS UNITS	ANALYZER SCALE	CYLINDER VALUE	ANALYZER VALUE	DIFF PPM	% SPAN	Pass Yes\No
O2, %		0.00	0.00	0.00	0.00	**YES**
O2, %	**25**	11.83	11.89	0.06	0.28	**YES**
O2, %		21.78	21.71	0.07	0.32	**YES**
CO2, %		0.00	0.00	0.00	0.00	**YES**
CO2, %	**20**	10.05	10.12	0.07	0.42	**YES**
CO2, %		16.70	16.55	0.15	0.90	**YES**

RUN 1
SYSTEM CALIBRATION BIAS AND DRIFT DATA

GAS UNITS	ANALYZER VALUE	PRE-TEST CHECK	% SPAN	Pass YES\NO	POST-TEST CHECK	% SPAN	% DRIFT	Pass YES\NO
O2, %	0.00	0.11	0.51	**YES**	0.12	0.55	0.05	**YES**
O2, %	11.89	12.18	1.33	**YES**	12.20	1.42	0.09	**YES**
CO2, %	0.00	0.00	0.00	**YES**	0.00	0.00	0.00	**YES**
CO2, %	10.12	9.87	1.50	**YES**	9.97	0.90	0.60	**YES**

UNCORRECTED ANALYZER VALUES

	DRY
O2, %	6.17
CO2, %	13.18

ANALYZER VALUES CORRECTED FOR DRIFT

	DRY
O2, %	5.9
CO2, %	13.4

RUN 2
SYSTEM CALIBRATION BIAS AND DRIFT DATA

GAS UNITS	ANALYZER VALUE	PRE-TEST CHECK	% SPAN	Pass YES\NO	POST-TEST CHECK	% SPAN	% DRIFT	Pass YES\NO
O2, %	0.00	0.12	0.55	**YES**	0.00	0.00	0.55	**YES**
O2, %	11.89	12.20	1.42	**YES**	11.92	0.14	1.29	**YES**
CO2, %	0.00	0.00	0.00	**YES**	0.00	0.00	0.00	**YES**
CO2, %	10.12	9.97	0.90	**YES**	9.88	1.44	0.54	**YES**

UNCORRECTED ANALYZER VALUES

	DRY
O2, %	6.06
CO2, %	13.04

ANALYZER VALUES CORRECTED FOR DRIFT

	DRY
O2, %	5.9
CO2, %	13.2

RUN 3
SYSTEM CALIBRATION BIAS AND DRIFT DATA

GAS UNITS	ANALYZER VALUE	PRE-TEST CHECK	% SPAN	Pass YES\NO	POST-TEST CHECK	% SPAN	% DRIFT	Pass YES\NO
O2, %	0.00	0.00	0.00	**YES**	0.00	0.00	0.00	**YES**
O2, %	11.89	11.92	0.14	**YES**	11.99	0.46	0.32	**YES**
CO2, %	0.00	0.00	0.00	**YES**	0.00	0.00	0.00	**YES**
CO2, %	10.12	9.88	1.44	**YES**	9.87	1.50	0.06	**YES**

UNCORRECTED ANALYZER VALUES

	DRY
O2, %	6.04
CO2, %	13.03

ANALYZER VALUES CORRECTED FOR DRIFT

	DRY
O2, %	6.0
CO2, %	13.3

CATALYST AIR MANAGEMENT Inc.

CLIENT: Salt River Project
UNIT: Navajo 3

RUN #: 1-3
LOAD LEVEL: High
DATE: 5/21/2015

Run 1 DATE	TIME	O2	CO2
5/21/2015	13:39	6.14	13.38
5/21/2015	13:40	6.13	13.39
5/21/2015	13:41	6.1	13.41
5/21/2015	13:42	6.18	13.35
5/21/2015	13:43	6.26	13.28
5/21/2015	13:44	6.21	13.32
5/21/2015	13:45	6.12	13.4
5/21/2015	13:46	6.11	13.4
5/21/2015	13:47	6.15	13.36
5/21/2015	13:48	6.13	13.37
5/21/2015	13:49	6.11	13.38
5/21/2015	13:50	6.16	13.33
5/21/2015	13:51	6.21	13.27
5/21/2015	13:52	6.28	13.22
5/21/2015	13:53	6.34	13.17
5/21/2015	13:54	6.22	13.27
5/21/2015	13:55	6.18	13.32
5/21/2015	13:56	6.16	13.33
5/21/2015	13:57	6.21	13.29
5/21/2015	13:58	6.13	13.36
5/21/2015	13:59	6.16	13.35
5/21/2015	14:00	6.2	13.3
5/21/2015	14:13	6.15	13.06
5/21/2015	14:14	6.17	13.04
5/21/2015	14:15	6.12	13.08
5/21/2015	14:16	6.13	13.07
5/21/2015	14:17	6.12	13.08
5/21/2015	14:18	6.18	13.03
5/21/2015	14:19	6.21	13
5/21/2015	14:20	6.28	12.94
5/21/2015	14:21	6.25	12.96
5/21/2015	14:22	6.1	13.09
5/21/2015	14:23	6.1	13.09
5/21/2015	14:24	6.16	13.04
5/21/2015	14:25	6.07	13.11
5/21/2015	14:26	6.06	13.11
5/21/2015	14:27	6.18	13.02
5/21/2015	14:28	6.21	12.98
5/21/2015	14:29	6.21	12.99
5/21/2015	14:30	6.17	13.02
5/21/2015	14:31	6.17	13.03
5/21/2015	14:32	6.19	13
5/21/2015	14:33	6.1	13.09
5/21/2015	14:34	6.14	13.05
		6.17	**13.18**

Run 2 DATE	TIME	O2	CO2
5/21/2015	15:34	6.04	13.06
5/21/2015	15:35	6.03	13.06
5/21/2015	15:36	6.03	13.06
5/21/2015	15:37	6.14	12.97
5/21/2015	15:38	6.14	12.97
5/21/2015	15:39	6.12	12.98
5/21/2015	15:40	6.14	12.97
5/21/2015	15:41	6.09	13
5/21/2015	15:42	6.15	12.96
5/21/2015	15:43	6.16	12.95
5/21/2015	15:44	6.12	12.98
5/21/2015	15:45	6.19	12.92
5/21/2015	15:46	6.15	12.95
5/21/2015	15:47	6.14	12.94
5/21/2015	15:48	6.11	12.97
5/21/2015	15:49	6.12	12.96
5/21/2015	15:50	6.09	12.98
5/21/2015	15:51	6.02	13.04
5/21/2015	15:52	6.02	13.04
5/21/2015	15:53	6.01	13.06
5/21/2015	15:54	6.11	12.97
5/21/2015	15:55	6.01	13.06
5/21/2015	16:17	6.02	13.06
5/21/2015	16:18	5.98	13.1
5/21/2015	16:19	5.98	13.11
5/21/2015	16:20	5.98	13.11
5/21/2015	16:21	6.01	13.08
5/21/2015	16:22	6.02	13.08
5/21/2015	16:23	5.93	13.15
5/21/2015	16:24	6	13.1
5/21/2015	16:25	5.98	13.11
5/21/2015	16:26	5.99	13.11
5/21/2015	16:27	5.98	13.11
5/21/2015	16:28	5.94	13.15
5/21/2015	16:29	5.83	13.24
5/21/2015	16:30	5.94	13.16
5/21/2015	16:31	6.01	13.09
5/21/2015	16:32	6	13.1
5/21/2015	16:33	6.08	13.02
5/21/2015	16:34	6.21	12.9
5/21/2015	16:35	6.18	12.92
5/21/2015	16:36	6.07	13.02
5/21/2015	16:37	6.15	12.94
5/21/2015	16:38	6.01	13.06
		6.06	**13.04**

Run 3 DATE	TIME	O2	CO2
5/21/2015	17:10	6.08	12.97
5/21/2015	17:11	6.1	12.94
5/21/2015	17:12	6.03	12.99
5/21/2015	17:13	5.97	13.05
5/21/2015	17:14	5.96	13.06
5/21/2015	17:15	5.95	13.07
5/21/2015	17:16	6.04	13
5/21/2015	17:17	6.07	12.98
5/21/2015	17:18	6.03	13.02
5/21/2015	17:19	6.04	13.01
5/21/2015	17:20	6.02	13.03
5/21/2015	17:21	6.01	13.05
5/21/2015	17:22	5.99	13.07
5/21/2015	17:23	5.95	13.1
5/21/2015	17:24	5.9	13.15
5/21/2015	17:25	5.97	13.1
5/21/2015	17:26	5.99	13.08
5/21/2015	17:27	6	13.07
5/21/2015	17:28	6	13.07
5/21/2015	17:29	6.03	13.05
5/21/2015	17:30	6.06	13.03
5/21/2015	17:31	6.09	13.01
5/21/2015	17:50	6.14	12.96
5/21/2015	17:51	6.14	12.96
5/21/2015	17:52	6.07	13.02
5/21/2015	17:53	6.09	13.01
5/21/2015	17:54	6.19	12.92
5/21/2015	17:55	6.16	12.94
5/21/2015	17:56	6.13	12.98
5/21/2015	17:57	6.04	13.05
5/21/2015	17:58	6.02	13.07
5/21/2015	17:59	6.02	13.08
5/21/2015	18:00	6.04	13.06
5/21/2015	18:01	6.01	13.09
5/21/2015	18:02	6.07	13.04
5/21/2015	18:03	6.11	13
5/21/2015	18:04	6.09	13.02
5/21/2015	18:05	6.11	12.99
5/21/2015	18:06	6.1	12.99
5/21/2015	18:07	6.05	13.02
5/21/2015	18:08	6.08	12.99
5/21/2015	18:09	6.03	13.03
5/21/2015	18:10	5.92	13.12
5/21/2015	18:11	5.88	13.17
		6.04	**13.03**

CATALYST AIR MANAGEMENT, INC. (865) 531-0075
Air Quality Testing Services (865) 531-0750 Fax
2505 Byington Solway Road
Knoxville, TN 37931

Field Isokinetic Data Sheet

Client	SRP	Pitot No.	CAM 137	Filter Number	C3B-580
Plant	Navajo	Nozzle No.	CAM 203	Initial Leak (Samp.)	0.000@7"
Location	Unit 3 stack	Nozzle Dn.	.235	Initial Leak (Pitot)	OK@6"
Test	M5	Stack TC No.	CAM 30		OK@5"
Run	1	P_B	25.03		
Date	5-21-15	Ambient Temp	67°F	Final Leak (Samp.)	0.000@7"
Meter Box	020	Static	+1.6	Final Leak (Pitot)	OK@6"
ΔH	1.63 | Y_1 .99				OK@6"

POINT	TIME ACTUAL	RUN	METER	ΔP	Δh	STACK °F	PROBE °F	Filter °F	METER °F IN	METER °F OUT	EXIT °F	VAC
	13:39		849.688			117	295					
A1		5	853.4	.68	1.6	~~295~~	~~320~~	320	74	70	54	5.0
2		10	857.2	.64	1.5	117	298	322	74	70	51	5.0
3	13:44	15	861.096	.55	1.3	117	307	308	74	70	49	5.0
	13:58		861.096									
B1		20	864.	.69	1.7	116	298	321	73	70	50	5.0
2		25	869.0	.64	1.6	116	307	316	73	70	50	5.0
3	14:13	30	872.810	.59	1.4	117	313	320	74	70	49	5.0
	14:16		872.810									
C1		35	875.5	.69	1.7	116	300	310	72	71	50	5.0
2		40	880.7	.65	1.6	116	312	304	73	71	50	5.0
3	14:31	45	884.423	.56	1.3	116	318	321	74	71	50	5.0
	14:34	~~50~~	884.423									
D1		50	888.2	.70	1.7	116	299	318	72	70	50	5.0
2		55	892.0	.65	1.6	117	311	312	74	70	52	5.0
3	14:49	60	895.638	.57	1.4	117	303	325	74	70	54	5.0

Operator: KS Imp 1: 208 Imp 2: 114 Imp 3: 2 Gel: 256

Comments:

CATALYST AIR MANAGEMENT, INC. (865) 531-0075
Air Quality Testing Services (865) 531-0750 Fax
2505 Byington-Solway Road
Knoxville, TN 37931

PLANT: NGS DATE: 5/21/15
SAMPLING TIME: (24 HR CLOCK) 1339-1445
SAMPLING LOCATION: 3 Stack
SAMPLING TYPE: Cat inlet
ANALYTICAL METHOD: 3A/3B AMB. TEMP (°F) 67
TECHNICIAN: Sherrod / Whick / Norwood

DMW & Emission Data Sheet

Run 1

RUN / GAS	1		2		3		AVERAGE NET VOLUME	Fo (TEST) = 20.9 − %O2 / %CO2	
	ACTUAL READING	NET	ACTUAL READING	NET	ACTUAL READING	NET			
CO_2							13.4		
O_2 (NET IS ACTUAL MINUS ACTUAL CO_2)							5.9	Fuel Type: COAL, RESIDUAL FUEL OIL, NATURAL GAS	Fo (calc): 1.309, 1.191

SYSTEM LEAK CHECK ✓ NA method
INITIAL ORSAT ANALYZER LEAK CHECK (FLUID LEVEL) ____/____ BUBBLER ____
FINAL ORSAT ANALYZER LEAK CHECK (FLUID LEVEL) ____/____ BUBBLER ____

MOISTURE

	1	2	3	4	5	6	GEL	TOTALS
FINAL (ml)	203	114	2				256	
INITIAL (ml)	100	100	6				250	
NET (ml)	103	14	2				6	130
TOTALS								130

PARTICULATE CATCH

FILTER WEIGHTS

FILTER NO.	C38-580			WEIGHED BY
FINAL WEIGHT	0.3818			ST/KD
INITIAL WEIGHT	0.3765			
DIFFERENCE	0.0053			
PARTICULATE CATCH	5.3			

PROBE/NOZZLE WASH

BEAKER NO.	37		Blank	WEIGHED BY
FINAL WEIGHT	100.2620		99.4093	ST/KD
INITIAL WEIGHT	100.2531		99.4092	
DIFFERENCE	0.0089		0.0001	
PARTICULATE CATCH	8.9		0.1	

TOTAL PARTICULATE CATCH (mg) 14.1

CATALYST AIR MANAGEMENT, INC. (865) 531-0075
Air Quality Testing Services (865) 531-0750 Fax
2505 Byington Solway Road
Knoxville, TN 37931

Field Isokinetic Data Sheet

Client	SRP	Pitot No.	CAM 137	Filter Number	C3B-581
Plant	Navajo	Nozzle No.	CAM 203	Initial Leak (Samp.)	0.000 @ 7
Location	Unit 3 stack	Nozzle Dn.	.235	Initial Leak (Pitot)	OK @ 3.8
Test	M5	Stack TC No.	CAM 30		OK @ 4.4
Run	2	P_B	25.03		
Date	5-21-15	Ambient Temp	66°F	Final Leak (Samp.)	0.000 @ 8
Meter Box	020	Static	+1.6	Final Leak (Pitot)	OK @ 4.8
ΔH	1.63 | Y, .99				OK @ 4.5

POINT	TIME ACTUAL	RUN	METER	ΔP	Δh	STACK °F	PROBE °F	Filter °F	METER °F IN	METER °F OUT	EXIT °F	VAC
	15:34		896.975									
D1		5	901.2	.71	1.7	117	305	317	70	70	58	5.0
2		10	905.1	.67	1.6	117	299	322	70	69	53	5.0
3	15:49	15	908.841	.57	1.4	116	308	317	71	70	55	5.0
	15:51		908.841									
C1		20	912.8	.68	1.6	116	302	308	72	70	57	5.0
2		25	916.7	.66	1.6	116	325	311	73	70	53	5.0
3	16:06	30	920.430	.57	1.4	116	316	315	73	71	50	5.0
	16:08		920.430									
B1		35	924.5	.69	1.7	116	306	325	72	71	50	5.0
2		40	928.4	.64	1.5	116	305	325	72	71	49	5.0
3	16:23	45	932.093	.58	1.4	117	317	321	73	71	50	5.0
	16:25		932.093									
A1		50	936.0	.68	1.6	117	309	323	73	71	51	5.0
2		55	940.0	.65	1.6	116	302	310	73	71	51	4.5
3	16:40	60	943.579	.56	1.3	116	308	328	73	71	51	4.5

Operator: LW Imp 1: 200 Imp 2: 120 Imp 3: 2 Gel: 261

Comments:

CATALYST AIR MANAGEMENT, INC. (865) 531-0075
Air Quality Testing Services (865) 531-0750 Fax
2505 Byington-Solway Road
Knoxville, TN 37931

PLANT: NGS DATE: 5/21/15
SAMPLING TIME: (24 HR CLOCK) 1534 - 1640
SAMPLING LOCATION: 3 Stack
SAMPLING TYPE: Cutmus
ANALYTICAL METHOD: 3A/5G AMB. TEMP. (°F) 66
TECHNICIAN: Whitt / Stemo / Norwood

DMW & Emission Data Sheet

Run 2

RUN / GAS	1		2		3		AVERAGE WET VOLUME	Fo (TEST) = $\frac{20.9 - \%O_2}{\%CO2}$	
	ACTUAL READING	NET	ACTUAL READING	NET	ACTUAL READING	NET			
CO_2							13.2		
O_2 (NET to ACTUAL MINUS ACTUAL CO_2)							5.9	Fuel Type COAL RESIDUAL FUEL OIL NATURAL GAS	Fo (calc) 1.208 1.218

SYSTEM LEAK CHECK ok NA method
INITIAL ORSAT ANALYZER LEAK CHECK (FLUID LEVEL) ____/____ BUBBLER ____
FINAL ORSAT ANALYZER LEAK CHECK (FLUID LEVEL) ____/____ BUBBLER ____

MOISTURE

	1	2	3	4	5	6	GEL	TOTALS
FINAL (ml)	200	120	2				261	
INITIAL (ml)	100	100	0				250	
NET (ml)	100	20	2				11	133
TOTALS								133

PARTICULATE CATCH

FILTER WEIGHTS

FILTER NO.	C3B-5B1			WEIGHED BY
FINAL WEIGHT	0.3811			ST/RD
INITIAL WEIGHT	0.3757			
DIFFERENCE	0.0054			
PARTICULATE CATCH	5.4			

PROBE/NOZZLE WASH

BEAKER NO.	36		Blank	WEIGHED BY
FINAL WEIGHT	104.1711			ST/RD
INITIAL WEIGHT	104.1604			
DIFFERENCE	0.0107			
PARTICULATE CATCH	10.7		0.1	

TOTAL PARTICULATE CATCH (mg) 16.0

CATALYST AIR MANAGEMENT, INC. (865) 531-0075
Air Quality Testing Services (865) 531-0750 Fax
2505 Byington Solway Road
Knoxville, TN 37931

Field Isokinetic Data Sheet

Client	SRP	Pitot No.	CAM 137	Filter Number	C38-582
Plant	NAVAJO	Nozzle No.	CAM 203	Initial Leak (Samp.)	0.000@7"
Location	UNIT 3 STACK	Nozzle Dn.	.235	Initial Leak (Pitot)	OK@4.2
Test	M5	Stack TC No.	CAM 30		OK@4.5
Run	3	P_B	25.03		
Date	5-21-15	Ambient Temp	67°F	Final Leak (Samp.)	0.000@7"
Meter Box	020	Static	+1.6	Final Leak (Pitot)	OK@4.4
ΔH	1.63 | Y₁ .99				OK@4.0

POINT	TIME ACTUAL	TIME RUN	METER	ΔP	Δh	STACK °F	PROBE °F	Filter °F	METER °F IN	METER °F OUT	EXIT °F	VAC
	17:10		943.820									
A1		5	947.9	.69	1.7	116	300	320	71	71	53	4.5
2		10	951.7	.64	1.5	116	298	312	72	71	51	4.5
3	17:25	15	955.210	.56	1.3	116	315	300	72	71	55	4.0
	17:26		955.210									
B1		20	959.3	.70	1.7	116	309	306	73	71	56	5.0
2		25	963.1	.64	1.5	116	319	316	74	71	49	5.0
3	17:41	30	966.802	.59	1.4	116	323	319	74	71	49	4.5
	17:43		966.802									
C1		35	970.8	.69	1.7	117	324	327	74	71	49	5.0
2		40	974.6	.64	1.5	116	325	321	74	71	47	5.0
3	17:58	45	978.153	.55	1.3	116	311	328	75	72	48	4.5
	18:00		978.153									
D1		50	982.2	.69	1.7	116	307	320	75	72	46	5.0
2		55	986.1	.65	1.6	115	316	328	75	72	45	5.0
3	18:15	60	989.653	.56	1.3	116	309	313	76	73	48	4.5

Operator: LW Imp 1: 202 Imp 2: 122 Imp 3: 2 Gel: 256

Comments:

CATALYST AIR MANAGEMENT, INC. (865) 531-0075
Air Quality Testing Services (865) 531-0750 Fax
2505 Byington-Solway Road
Knoxville, TN 37931

PLANT: NGS DATE: 5/21/15
SAMPLING TIME: (24 HR CLOCK) 1710 - 1815
SAMPLING LOCATION: 3 Stack
SAMPLING TYPE: Continuo
ANALYTICAL METHOD: 3A/5B AMB. TEMP (°F) 67
TECHNICIAN: Which / Stress / Nanod

DMW & Emission Data Sheet

Run 3

RUN / GAS	1		2		3		AVERAGE NET VOLUME	Fo (TEST) = 20.9 − %O2 / %CO2	
	ACTUAL READING	NET	ACTUAL READING	NET	ACTUAL READING	NET			
CO_2							13.3		
O_2 (NET IS ACTUAL MINUS ACTUAL CO_2)							6.0	Fuel Type: COAL, RESIDUAL FUEL OIL, NATURAL GAS	Fo (calc): 1.300, 1.374

SYSTEM LEAK CHECK ok NA retest
INITIAL ORSAT ANALYZER LEAK CHECK (FLUID LEVEL) ____/____ BUBBLER ____
FINAL ORSAT ANALYZER LEAK CHECK (FLUID LEVEL) ____/____ BUBBLER ____

MOISTURE

	1	2	3	4	5	6	GEL	TOTALS
FINAL (ml)	202	122	2				256	
INITIAL (ml)	100	100	6				250	
NET (ml)	102	22	2				6	132
TOTALS								132

PARTICULATE CATCH

FILTER WEIGHTS

FILTER NO.	C3B-582			WEIGHED BY
FINAL WEIGHT	0.3824			ST/AD
INITIAL WEIGHT	0.3765			
DIFFERENCE	0.0059			
PARTICULATE CATCH	5.9			

PROBE/NOZZLE WASH

BEAKER NO.	29		Blank	WEIGHED BY
FINAL WEIGHT	104.9912			ST/AD
INITIAL WEIGHT	104.9817			
DIFFERENCE	0.0095			
PARTICULATE CATCH	9.5		0.1	

TOTAL PARTICULATE CATCH (mg) 15.3

APPENDIX 2
PLANT DATA

Unit 1

Average Data

Plant: NAVAJO GENERATING STATION
Interval: 1 Minute
Type: Roll
Report Period: 05/18/2015 10:28 Through 05/18/2015 11:36
Time Online Criteria: 1 minute(s)

Source		UNIT1		
Parameter Unit		CO2PCTC (PERCENT)	COALFLOW (KPPH)	UNITLOAD (MW)
05/18/15	10:28	0.2IC	699.9	814
05/18/15	10:29	0.2IC	705.3	813
05/18/15	10:30	0.2IC	712.1	813
05/18/15	10:31	0.2IC	718.2	814
05/18/15	10:32	0.2IC	718.2	818
05/18/15	10:33	0.2IC	718.2	816
05/18/15	10:34	0.2IC	718.9	815
05/18/15	10:35	0.2IC	724.3	815
05/18/15	10:36	0.2IC	724.3	816
05/18/15	10:37	0.2IC	724.3	818
05/18/15	10:38	0.7IC	724.3	818
05/18/15	10:39	16.6IC	724.3	817
05/18/15	10:40	18.5IC	720.3	816
05/18/15	10:41	18.3IC	716.2	818
05/18/15	10:42	18.1IC	710.9	814
05/18/15	10:43	18.0IC	708.2	813
05/18/15	10:44	18.0IC	708.2	812
05/18/15	10:45	18.0IC	708.2	812
05/18/15	10:46	14.5IC	708.2	813
05/18/15	10:47	0.5IC	708.2	814
05/18/15	10:48	0.5IC	708.2	814
05/18/15	10:49	9.0IC	708.2	812
05/18/15	10:50	11.7IC	708.2	812
05/18/15	10:51	11.9IC	716.2	813
05/18/15	10:52	11.8IC	716.2	814
05/18/15	10:53	11.2IC	718.2	814
05/18/15	10:54	11.0	716.2	814
05/18/15	10:55	11.0	718.2	814
05/18/15	10:56	10.9	718.2	813
05/18/15	10:57	10.9	718.2	815
05/18/15	10:58	10.9	716.2	817
05/18/15	10:59	10.9	714.9	817
05/18/15	11:00	10.9	708.2	818
05/18/15	11:01	11.0	700.1	818
05/18/15	11:02	11.0	692.0	818
05/18/15	11:03	11.1	692.0	814
05/18/15	11:04	11.0	692.0	812
05/18/15	11:05	11.0	696.1	811
05/18/15	11:06	11.0	700.3	813
05/18/15	11:07	11.0	700.3	813
05/18/15	11:08	11.0	700.3	813
05/18/15	11:09	11.1	700.3	814
05/18/15	11:10	11.1	700.3	815
05/18/15	11:11	11.1	700.3	817
05/18/15	11:12	11.1	693.5	817
05/18/15	11:13	11.1	692.1	817
05/18/15	11:14	11.1	692.1	814
05/18/15	11:15	11.1	692.1	813
05/18/15	11:16	11.1	692.1	814
05/18/15	11:17	11.0	692.1	813
05/18/15	11:18	10.9	718.5	810

F = Unit Offline **E = Exceedance** **C = Calibration** **S = Substituted** **I = Invalid**
M = Maintenance **T = Out Of Control** *** = Suspect** **U = Startup** **D = Shutdown**

Average Data

Plant: NAVAJO GENERATING STATION
Interval: 1 Minute
Type: Roll
Report Period: 05/18/2015 10:28 Through 05/18/2015 11:36
Time Online Criteria: 1 minute(s)

Source		UNIT1		
Parameter Unit		CO2PCTC (PERCENT)	COALFLOW (KPPH)	UNITLOAD (MW)
05/18/15	11:19	11.0	729.4	813
05/18/15	11:20	10.9	725.2	818
05/18/15	11:21	10.7	725.2	818
05/18/15	11:22	10.8	725.2	818
05/18/15	11:23	10.6	725.2	819
05/18/15	11:24	10.8	725.2	818
05/18/15	11:25	10.9	725.2	818
05/18/15	11:26	11.1	725.2	818
05/18/15	11:27	11.1	723.9	816
05/18/15	11:28	11.0	717.2	817
05/18/15	11:29	11.1	717.2	817
05/18/15	11:30	11.1	717.2	817
05/18/15	11:31	11.0	717.2	817
05/18/15	11:32	11.0	713.2	817
05/18/15	11:33	11.1	709.2	818
05/18/15	11:34	11.1	709.2	815
05/18/15	11:35	11.1	709.2	814
05/18/15	11:36	11.1	709.2	814
	Average	11.0	711.1	815
	Minimum	10.6	692.0	810
	Maximum	11.1	729.4	819
	Summation	472.6	49,067.0	56,230
	Included Data Points	43	69	69
	Total number of Data Points	69	69	69

F = Unit Offline **E = Exceedance** **C = Calibration** **S = Substituted** **I = Invalid**
M = Maintenance **T = Out Of Control** *** = Suspect** **U = Startup** **D = Shutdown**

Average Data

Plant: NAVAJO GENERATING STATION
Interval: 1 Minute
Type: Roll
Report Period: 05/18/2015 14:20 Through 05/18/2015 15:28
Time Online Criteria: 1 minute(s)

Source		UNIT1		
Parameter		CO2PCTC	COALFLOW	UNITLOAD
Unit		(PERCENT)	(KPPH)	(MW)
05/18/15	14:20	11.6	694.9	809
05/18/15	14:21	11.4	709.9	810
05/18/15	14:22	11.3	709.9	813
05/18/15	14:23	11.3	715.3	813
05/18/15	14:24	11.3	718.0	813
05/18/15	14:25	11.3	718.0	815
05/18/15	14:26	11.3	726.0	817
05/18/15	14:27	11.3	726.0	818
05/18/15	14:28	11.3	726.0	818
05/18/15	14:29	11.4	726.0	817
05/18/15	14:30	11.4	726.0	818
05/18/15	14:31	11.4	726.0	818
05/18/15	14:32	11.4	726.0	817
05/18/15	14:33	11.5	724.7	817
05/18/15	14:34	11.4	718.0	818
05/18/15	14:35	11.5	709.8	817
05/18/15	14:36	11.5	709.8	814
05/18/15	14:37	11.5	709.8	813
05/18/15	14:38	11.4	709.8	812
05/18/15	14:39	11.4	709.8	812
05/18/15	14:40	11.4	709.8	813
05/18/15	14:41	11.4	715.2	813
05/18/15	14:42	11.4	717.8	813
05/18/15	14:43	11.4	717.8	815
05/18/15	14:44	11.4	717.8	818
05/18/15	14:45	11.4	717.8	818
05/18/15	14:46	11.5	717.8	817
05/18/15	14:47	11.5	717.8	818
05/18/15	14:48	11.4	717.8	816
05/18/15	14:49	11.3	717.8	816
05/18/15	14:50	11.3	717.8	816
05/18/15	14:51	11.3	717.8	817
05/18/15	14:52	11.3	715.2	817
05/18/15	14:53	11.3	709.8	817
05/18/15	14:54	11.3	709.8	817
05/18/15	14:55	11.4	709.8	815
05/18/15	14:56	11.4	709.8	815
05/18/15	14:57	11.3	709.8	814
05/18/15	14:58	11.3	709.8	813
05/18/15	14:59	11.4	712.8	812
05/18/15	15:00	11.3	718.1	813
05/18/15	15:01	11.3	718.1	815
05/18/15	15:02	11.2	718.1	816
05/18/15	15:03	11.2	718.1	818
05/18/15	15:04	11.3	718.1	817
05/18/15	15:05	11.3	718.1	818
05/18/15	15:06	11.3	718.1	818
05/18/15	15:07	11.3	711.4	819
05/18/15	15:08	11.3	693.9	820
05/18/15	15:09	11.4	685.8	818
05/18/15	15:10	11.4	685.8	812

F = Unit Offline **E = Exceedance** **C = Calibration** **S = Substituted** **I = Invalid**
M = Maintenance **T = Out Of Control** *** = Suspect** **U = Startup** **D = Shutdown**

Average Data

Plant: NAVAJO GENERATING STATION
Interval: 1 Minute
Type: Roll
Report Period: 05/18/2015 14:20 Through 05/18/2015 15:28
Time Online Criteria: 1 minute(s)

Source		UNIT1		
Parameter Unit		CO2PCTC (PERCENT)	COALFLOW (KPPH)	UNITLOAD (MW)
05/18/15	15:11	11.4	696.7	810
05/18/15	15:12	11.2	702.2	811
05/18/15	15:13	11.1	708.9	812
05/18/15	15:14	11.1	710.3	812
05/18/15	15:15	11.2	710.3	813
05/18/15	15:16	11.2	710.3	815
05/18/15	15:17	11.1	712.9	818
05/18/15	15:18	11.2	718.3	819
05/18/15	15:19	11.2	718.3	817
05/18/15	15:20	11.2	718.3	815
05/18/15	15:21	11.2	718.3	818
05/18/15	15:22	11.2	718.3	817
05/18/15	15:23	11.1	718.3	817
05/18/15	15:24	11.2	718.3	817
05/18/15	15:25	11.2	718.3	815
05/18/15	15:26	11.3	718.3	818
05/18/15	15:27	11.2	718.3	818
05/18/15	15:28	11.2	708.9	817
	Average	11.3	714.2	815
	Minimum	11.1	685.8	809
	Maximum	11.6	726.0	820
	Summation	781.1	49,276.4	56,258
	Included Data Points	69	69	69
	Total number of Data Points	69	69	69

F = Unit Offline **E = Exceedance** **C = Calibration** **S = Substituted** **I = Invalid**
M = Maintenance **T = Out Of Control** *** = Suspect** **U = Startup** **D = Shutdown**

Average Data

Plant: NAVAJO GENERATING STATION
Interval: 1 Minute
Type: Roll
Report Period: 05/18/2015 15:40 Through 05/18/2015 16:46
Time Online Criteria: 1 minute(s)

Source		UNIT1		
Parameter Unit		CO2PCTC (PERCENT)	COALFLOW (KPPH)	UNITLOAD (MW)
05/18/15	15:40	11.3	710.2	816
05/18/15	15:41	11.2	710.2	818
05/18/15	15:42	11.2	710.2	818
05/18/15	15:43	11.2	710.2	815
05/18/15	15:44	11.2	710.2	814
05/18/15	15:45	11.2	710.2	814
05/18/15	15:46	11.1	710.2	815
05/18/15	15:47	11.1	710.2	816
05/18/15	15:48	11.1	710.2	818
05/18/15	15:49	11.2	704.9	818
05/18/15	15:50	11.3	702.2	817
05/18/15	15:51	11.3	702.2	813
05/18/15	15:52	11.2	702.2	811
05/18/15	15:53	11.1	706.2	812
05/18/15	15:54	11.1	710.3	813
05/18/15	15:55	11.2	710.3	814
05/18/15	15:56	11.3	710.3	815
05/18/15	15:57	11.3	710.3	814
05/18/15	15:58	11.3	710.3	814
05/18/15	15:59	11.3	710.3	815
05/18/15	16:00	11.3	710.3	817
05/18/15	16:01	11.2	704.9	817
05/18/15	16:02	11.3	700.9	818
05/18/15	16:03	11.3	694.1	817
05/18/15	16:04	11.3	694.1	813
05/18/15	16:05	11.3	710.7	810
05/18/15	16:06	11.2	714.8	813
05/18/15	16:07	11.0	710.6	813
05/18/15	16:08	11.0	720.0	812
05/18/15	16:09	11.0	726.6	813
05/18/15	16:10	11.1	726.6	814
05/18/15	16:11	11.1	726.6	815
05/18/15	16:12	11.1	726.6	817
05/18/15	16:13	11.0	726.6	817
05/18/15	16:14	11.1	726.6	816
05/18/15	16:15	11.2	726.6	816
05/18/15	16:16	11.2	721.3	819
05/18/15	16:17	11.2	710.5	816
05/18/15	16:18	11.3	717.3	816
05/18/15	16:19	11.3	710.6	614
05/18/15	16:20	11.3	710.6	813
05/18/15	16:21	11.3	710.6	612
05/18/15	16:22	11.2	710.6	811
05/18/15	16:23	11.2	717.3	812
05/18/15	16:24	11.2	716.6	814
05/18/15	16:25	11.2	716.6	816
05/18/15	16:26	11.2	716.6	816
05/18/15	16:27	11.3	718.6	814
05/18/15	16:28	11.3	718.6	814
05/18/15	16:29	11.2	716.8	816
05/18/15	16:30	11.2	716.6	816

F = Unit Offline **E = Exceedance** **C = Calibration** **S = Substituted** **I = Invalid**
M = Maintenance **T = Out Of Control** *** = Suspect** **U = Startup** **D = Shutdown**

Average Data

Plant: NAVAJO GENERATING STATION
Interval: 1 Minute
Type: Roll
Report Period: 05/18/2015 15:40 Through 05/18/2015 16:46
Time Online Criteria: 1 minute(s)

Source		UNIT1		
Parameter Unit		CO2PCTC (PERCENT)	COALFLOW (KPPH)	UNITLOAD (MW)
05/18/15	16:31	11.2	718.6	817
05/18/15	16:32	11.3	718.6	818
05/18/15	16:33	11.2	711.9	818
05/18/15	16:34	11.3	709.2	815
05/18/15	16:35	11.3	702.4	812
05/18/15	16:36	11.3	702.4	811
05/18/15	16:37	11.2	709.1	811
05/18/15	16:38	11.1	710.4	812
05/18/15	16:39	11.2	710.4	813
05/18/15	16:40	11.3	710.4	814
05/18/15	16:41	11.2	710.4	816
05/18/15	16:42	11.2	710.4	817
05/18/15	16:43	11.3	710.4	817
05/18/15	16:44	11.5	710.4	816
05/18/15	16:45	11.4	710.4	814
05/18/15	16:46	11.3	717.1	812
	Average	11.2	712.4	815
	Minimum	11.0	694.1	810
	Maximum	11.5	726.6	819
	Summation	751.6	47,729.4	54,592
	Included Data Points	67	67	67
	Total number of Data Points	67	67	67

F = Unit Offline **E = Exceedance** **C = Calibration** **S = Substituted** **I = Invalid**
M = Maintenance **T = Out Of Control** *** = Suspect** **U = Startup** **D = Shutdown**

Unit 2

Average Data

Plant: NAVAJO GENERATING STATION
Interval: 1 Minute
Type: Roll
Report Period: 05/20/2015 11:11 Through 05/20/2015 12:17
Time Online Criteria: 1 minute(s)

Source		UNIT2		
Parameter Unit		CO2PCTC (PERCENT)	COALFLOW (KPPH)	UNITLOAD (MW)
05/20/15	11:11	10.8	706.6	805
05/20/15	11:12	10.8	701.3	803
05/20/15	11:13	10.8	701.3	802
05/20/15	11:14	10.7	701.3	802
05/20/15	11:15	10.8	701.3	803
05/20/15	11:16	10.6	701.3	803
05/20/15	11:17	10.7	706.7	802
05/20/15	11:18	10.7	714.7	802
05/20/15	11:19	10.7	717.4	804
05/20/15	11:20	10.8	717.4	807
05/20/15	11:21	10.8	725.4	808
05/20/15	11:22	10.8	725.4	809
05/20/15	11:23	10.7	722.7	810
05/20/15	11:24	10.8	711.8	810
05/20/15	11:25	10.7	709.1	808
05/20/15	11:26	10.8	709.1	805
05/20/15	11:27	10.7	709.1	802
05/20/15	11:28	10.7	713.1	802
05/20/15	11:29	10.7	717.2	804
05/20/15	11:30	10.7	717.2	808
05/20/15	11:31	10.7	717.2	807
05/20/15	11:32	10.7	717.2	808
05/20/15	11:33	10.8	717.2	805
05/20/15	11:34	10.8	717.2	803
05/20/15	11:35	10.7	717.2	804
05/20/15	11:36	10.8	717.2	805
05/20/15	11:37	10.7	717.2	808
05/20/15	11:38	10.7	717.2	809
05/20/15	11:39	10.7	711.8	808
05/20/15	11:40	10.8	709.2	808
05/20/15	11:41	10.8	709.2	808
05/20/15	11:42	10.8	709.2	807
05/20/15	11:43	10.8	709.2	805
05/20/15	11:44	10.8	709.2	803
05/20/15	11:45	10.7	709.2	801
05/20/15	11:46	10.7	714.5	802
05/20/15	11:47	10.8	717.2	803
05/20/15	11:48	10.8	717.2	805
05/20/15	11:49	10.7	717.2	807
05/20/15	11:50	10.7	717.2	808
05/20/15	11:51	10.7	717.2	810
05/20/15	11:52	10.7	706.2	811
05/20/15	11:53	10.8	700.9	808
05/20/15	11:54	10.9	700.9	804
05/20/15	11:55	10.8	707.6	801
05/20/15	11:56	10.7	716.9	801
05/20/15	11:57	10.6	716.9	802
05/20/15	11:58	10.5	716.9	803
05/20/15	11:59	10.8	723.8	805
05/20/15	12:00	10.6	725.0	807
05/20/15	12:01	10.7	725.0	809

F = Unit Offline **E = Exceedance** **C = Calibration** **S = Substituted** **I = Invalid**
M = Maintenance **T = Out Of Control** *** = Suspect** **U = Startup** **D = Shutdown**

Average Data

Plant: NAVAJO GENERATING STATION
Interval: 1 Minute
Type: Roll
Report Period: 05/20/2015 11:11 Through 05/20/2015 12:17
Time Online Criteria: 1 minute(s)

Source		UNIT2		
Parameter Unit		CO2PCTC (PERCENT)	COALFLOW (KPPH)	UNITLOAD (MW)
05/20/15	12:02	10.7	725.0	809
05/20/15	12:03	10.8	722.3	809
05/20/15	12:04	10.8	716.9	808
05/20/15	12:05	10.8	716.9	807
05/20/15	12:06	10.8	716.9	807
05/20/15	12:07	10.7	716.9	807
05/20/15	12:08	10.8	716.9	807
05/20/15	12:09	10.8	716.9	805
05/20/15	12:10	10.8	716.9	804
05/20/15	12:11	10.7	716.9	805
05/20/15	12:12	10.7	716.9	806
05/20/15	12:13	10.7	716.9	807
05/20/15	12:14	10.8	716.9	807
05/20/15	12:15	10.8	712.9	807
05/20/15	12:16	10.8	708.9	805
05/20/15	12:17	10.8	708.9	803
	Average	10.7	714.0	806
	Minimum	10.5	700.9	801
	Maximum	10.9	725.4	811
	Summation	718.1	47,838.3	53,975
	Included Data Points	67	67	67
	Total number of Data Points	67	67	67

F = Unit Offline **E = Exceedance** **C = Calibration** **S = Substituted** **I = Invalid**
M = Maintenance **T = Out Of Control** *** = Suspect** **U = Startup** **D = Shutdown**

Average Data

Plant: NAVAJO GENERATING STATION
Interval: 1 Minute
Type: Roll
Report Period: 05/20/2015 12:35 Through 05/20/2015 13:41
Time Online Criteria: 1 minute(s)

Source		UNIT2		
Parameter		CO2PCTC	COALFLOW	UNITLOAD
Unit		(PERCENT)	(KPPH)	(MW)
05/20/15	12:35	10.8	716.7	808
05/20/15	12:36	10.8	716.7	806
05/20/15	12:37	10.8	716.7	804
05/20/15	12:38	10.8	716.7	804
05/20/15	12:39	10.7	718.7	803
05/20/15	12:40	10.7	719.5	802
05/20/15	12:41	10.7	733.2	802
05/20/15	12:42	10.6	733.2	805
05/20/15	12:43	10.5	738.6	806
05/20/15	12:44	10.5	737.3	811
05/20/15	12:45	10.5	726.5	809
05/20/15	12:46	10.7	725.2	807
05/20/15	12:47	10.7	725.2	806
05/20/15	12:48	10.7	725.2	806
05/20/15	12:49	10.7	725.2	806
05/20/15	12:50	10.8	725.2	806
05/20/15	12:51	10.8	725.2	804
05/20/15	12:52	10.8	725.2	807
05/20/15	12:53	10.7	719.8	809
05/20/15	12:54	10.8	717.1	809
05/20/15	12:55	10.8	717.1	806
05/20/15	12:56	10.8	717.1	804
05/20/15	12:57	10.8	717.1	803
05/20/15	12:58	10.7	717.1	803
05/20/15	12:59	10.7	714.5	804
05/20/15	13:00	10.7	709.1	805
05/20/15	13:01	10.8	709.1	805
05/20/15	13:02	10.8	709.1	803
05/20/15	13:03	10.6	709.1	803
05/20/15	13:04	10.8	709.1	803
05/20/15	13:05	10.7	709.1	803
05/20/15	13:06	10.8	709.1	802
05/20/15	13:07	10.7	709.1	803
05/20/15	13:08	10.7	710.5	802
05/20/15	13:09	10.7	723.9	801
05/20/15	13:10	10.7	725.2	805
05/20/15	13:11	10.5	725.2	808
05/20/15	13:12	10.5	726.6	807
05/20/15	13:13	10.6	733.3	807
05/20/15	13:14	10.6	733.3	809
05/20/15	13:15	10.5	733.3	810
05/20/15	13:16	10.7	729.3	810
05/20/15	13:17	10.7	722.7	810
05/20/15	13:18	10.6	717.3	809
05/20/15	13:19	10.8	717.3	807
05/20/15	13:20	10.6	717.3	806
05/20/15	13:21	10.6	717.3	804
05/20/15	13:22	10.6	717.3	801
05/20/15	13:23	10.8	717.3	802
05/20/15	13:24	10.7	717.3	805
05/20/15	13:25	10.7	717.3	806

F = Unit Offline **E = Exceedance** **C = Calibration** **S = Substituted** **I = Invalid**
M = Maintenance **T = Out Of Control** *** = Suspect** **U = Startup** **D = Shutdown**

Average Data

Plant: NAVAJO GENERATING STATION
Interval: 1 Minute
Type: Roll

Report Period: 05/20/2015 12:35 Through 05/20/2015 13:41
Time Online Criteria: 1 minute(s)

Source	UNIT2		
Parameter Unit	CO2PCTC (PERCENT)	COALFLOW (KPPH)	UNITLOAD (MW)
05/20/15 13:26	10.8	717.3	806
05/20/15 13:27	10.9	717.3	807
05/20/15 13:28	10.8	717.3	807
05/20/15 13:29	10.8	717.3	808
05/20/15 13:30	10.8	717.3	808
05/20/15 13:31	10.9	717.3	806
05/20/15 13:32	10.9	717.3	802
05/20/15 13:33	10.8	720.1	801
05/20/15 13:34	10.6	725.6	802
05/20/15 13:35	10.5	725.6	804
05/20/15 13:36	10.6	725.6	805
05/20/15 13:37	10.6	725.6	806
05/20/15 13:38	10.7	725.6	805
05/20/15 13:39	10.8	725.6	806
05/20/15 13:40	10.7	716.2	809
05/20/15 13:41	10.8	709.5	807
Average	10.7	720.3	806
Minimum	10.5	709.1	801
Maximum	10.9	738.6	811
Summation	718.4	48,263.0	53,973
Included Data Points	67	67	67
Total number of Data Points	67	67	67

F = Unit Offline **E = Exceedance** **C = Calibration** **S = Substituted** **I = Invalid**
M = Maintenance **T = Out Of Control** *** = Suspect** **U = Startup** **D = Shutdown**

Average Data

Plant: NAVAJO GENERATING STATION
Interval: 1 Minute
Type: Roll

Report Period: 05/20/2015 14:06 Through 05/20/2015 15:13
Time Online Criteria: 1 minute(s)

Source		UNIT2		
Parameter		CO2PCTC	COALFLOW	UNITLOAD
Unit		(PERCENT)	(KPPH)	(MW)
05/20/15	14:06	10.9	717.6	807
05/20/15	14:07	10.9	717.6	807
05/20/15	14:08	10.9	717.6	806
05/20/15	14:09	10.9	717.6	804
05/20/15	14:10	10.9	717.6	803
05/20/15	14:11	10.8	723.0	803
05/20/15	14:12	10.7	725.7	805
05/20/15	14:13	10.6	725.7	806
05/20/15	14:14	10.6	729.7	807
05/20/15	14:15	10.6	733.7	809
05/20/15	14:16	10.6	728.3	809
05/20/15	14:17	10.6	725.6	806
05/20/15	14:18	10.7	725.6	807
05/20/15	14:19	10.7	725.8	807
05/20/15	14:20	10.7	725.6	806
05/20/15	14:21	10.7	714.9	810
05/20/15	14:22	10.7	709.5	809
05/20/15	14:23	10.8	709.5	804
05/20/15	14:24	10.9	709.5	801
05/20/15	14:25	10.6	709.5	801
05/20/15	14:26	10.7	709.5	802
05/20/15	14:27	10.6	709.5	802
05/20/15	14:28	10.8	717.5	802
05/20/15	14:29	10.6	717.5	804
05/20/15	14:30	10.8	717.5	807
05/20/15	14:31	10.8	717.5	806
05/20/15	14:32	10.7	717.5	806
05/20/15	14:33	10.7	717.5	806
05/20/15	14:34	10.8	717.5	806
05/20/15	14:35	10.8	717.5	807
05/20/15	14:36	10.8	717.5	806
05/20/15	14:37	10.7	717.5	809
05/20/15	14:38	10.8	717.5	806
05/20/15	14:39	10.8	717.5	806
05/20/15	14:40	10.8	717.5	806
05/20/15	14:41	10.8	717.5	807
05/20/15	14:42	10.8	717.5	807
05/20/15	14:43	10.8	717.5	805
05/20/15	14:44	10.7	717.5	806
05/20/15	14:45	10.7	717.5	807
05/20/15	14:46	10.8	716.2	806
05/20/15	14:47	10.8	709.5	806
05/20/15	14:48	10.8	709.5	806
05/20/15	14:49	10.8	709.5	806
05/20/15	14:50	10.8	709.5	804
05/20/15	14:51	10.8	709.5	803
05/20/15	14:52	10.8	712.2	801
05/20/15	14:53	10.7	717.5	802
05/20/15	14:54	10.7	717.5	804
05/20/15	14:55	10.7	717.5	807
05/20/15	14:56	10.7	717.5	806

F = Unit Offline **E = Exceedance** **C = Calibration** **S = Substituted** **I = Invalid**
M = Maintenance **T = Out Of Control** *** = Suspect** **U = Startup** **D = Shutdown**

Average Data

Plant: NAVAJO GENERATING STATION
Interval: 1 Minute
Type: Roll
Report Period: 05/20/2015 14:06 Through 05/20/2015 15:13
Time Online Criteria: 1 minute(s)

Source		UNIT2		
Parameter Unit		CO2PCTC (PERCENT)	COALFLOW (KPPH)	UNITLOAD (MW)
05/20/15	14:57	10.8	717.5	809
05/20/15	14:58	10.9	717.5	808
05/20/15	14:59	11.0	717.5	807
05/20/15	15:00	10.9	717.5	807
05/20/15	15:01	10.9	717.5	807
05/20/15	15:02	10.9	717.5	806
05/20/15	15:03	10.9	717.5	806
05/20/15	15:04	10.9	717.5	807
05/20/15	15:05	10.9	716.2	806
05/20/15	15:06	10.9	709.4	807
05/20/15	15:07	10.9	708.1	806
05/20/15	15:08	10.9	701.4	805
05/20/15	15:09	10.9	701.4	802
05/20/15	15:10	10.9	706.9	801
05/20/15	15:11	10.8	709.6	803
05/20/15	15:12	10.8	709.6	805
05/20/15	15:13	10.9	702.9	805
	Average	10.8	716.1	806
	Minimum	10.6	701.4	801
	Maximum	11.0	733.7	810
	Summation	732.7	48,694.8	54,800
	Included Data Points	68	68	68
	Total number of Data Points	68	68	68

F = Unit Offline **E = Exceedance** **C = Calibration** **S = Substituted** **I = Invalid**
M = Maintenance **T = Out Of Control** *** = Suspect** **U = Startup** **D = Shutdown**

Unit 3

Average Data

Plant: NAVAJO GENERATING STATION
Interval: 1 Minute
Type: Roll
Report Period: 05/21/2015 13:39 Through 05/21/2015 14:49
Time Online Criteria: 1 minute(s)

Source		UNIT3		
Parameter		CO2PCTC	COALFLOW	UNITLOAD
Unit		(PERCENT)	(KPPH)	(MW)
05/21/15	13:39	11.0	713.1	810
05/21/15	13:40	11.0	713.1	809
05/21/15	13:41	11.0	713.1	809
05/21/15	13:42	11.0	713.1	808
05/21/15	13:43	11.0	713.1	809
05/21/15	13:44	10.9	713.1	810
05/21/15	13:45	11.0	713.1	809
05/21/15	13:46	11.0	713.1	810
05/21/15	13:47	11.0	713.1	811
05/21/15	13:48	11.0	713.1	811
05/21/15	13:49	11.0	713.1	811
05/21/15	13:50	11.0	713.1	810
05/21/15	13:51	11.0	713.1	808
05/21/15	13:52	10.9	713.1	808
05/21/15	13:53	10.9	713.1	809
05/21/15	13:54	10.9	713.1	809
05/21/15	13:55	11.0	713.1	809
05/21/15	13:56	11.0	718.4	810
05/21/15	13:57	10.9	721.1	812
05/21/15	13:58	11.0	721.1	812
05/21/15	13:59	11.0	721.1	812
05/21/15	14:00	11.0	721.1	813
05/21/15	14:01	11.0	721.1	812
05/21/15	14:02	11.0	715.8	811
05/21/15	14:03	11.0	713.1	810
05/21/15	14:04	10.9	713.1	809
05/21/15	14:05	11.0	713.1	809
05/21/15	14:06	11.0	713.1	808
05/21/15	14:07	11.0	713.1	809
05/21/15	14:08	11.0	713.1	809
05/21/15	14:09	11.0	713.1	808
05/21/15	14:10	11.0	713.1	808
05/21/15	14:11	11.0	713.1	808
05/21/15	14:12	11.0	713.1	807
05/21/15	14:13	11.0	713.1	808
05/21/15	14:14	11.0	713.1	809
05/21/15	14:15	11.0	713.1	810
05/21/15	14:16	11.0	713.1	810
05/21/15	14:17	11.0	713.1	809
05/21/15	14:18	11.0	713.1	808
05/21/15	14:19	11.0	713.1	808
05/21/15	14:20	10.9	713.1	809
05/21/15	14:21	10.9	713.1	811
05/21/15	14:22	11.0	713.1	810
05/21/15	14:23	11.0	713.1	812
05/21/15	14:24	11.0	713.1	812
05/21/15	14:25	11.0	713.1	811
05/21/15	14:26	11.0	713.1	810
05/21/15	14:27	11.0	713.1	809
05/21/15	14:28	11.0	713.1	808
05/21/15	14:29	11.0	713.1	808

F = Unit Offline **E = Exceedance** **C = Calibration** **S = Substituted** **I = Invalid**
M = Maintenance **T = Out Of Control** *** = Suspect** **U = Startup** **D = Shutdown**

Average Data

Plant: NAVAJO GENERATING STATION
Interval: 1 Minute
Type: Roll
Report Period: 05/21/2015 13:39 Through 05/21/2015 14:49
Time Online Criteria: 1 minute(s)

Source		UNIT3		
Parameter Unit		CO2PCTC (PERCENT)	COALFLOW (KPPH)	UNITLOAD (MW)
05/21/15	14:30	11.0	713.1	807
05/21/15	14:31	11.0	713.1	808
05/21/15	14:32	11.0	713.1	808
05/21/15	14:33	11.0	713.1	808
05/21/15	14:34	11.0	713.1	808
05/21/15	14:35	11.0	713.1	809
05/21/15	14:36	11.0	713.1	809
05/21/15	14:37	11.0	713.1	807
05/21/15	14:38	11.1	713.1	806
05/21/15	14:39	11.0	713.1	807
05/21/15	14:40	11.0	713.1	808
05/21/15	14:41	11.0	710.4	807
05/21/15	14:42	11.0	705.1	807
05/21/15	14:43	11.0	705.1	807
05/21/15	14:44	11.0	705.1	807
05/21/15	14:45	10.9	710.4	807
05/21/15	14:46	11.0	713.1	808
05/21/15	14:47	11.0	713.1	810
05/21/15	14:48	11.0	713.1	810
05/21/15	14:49	11.0	713.1	812
	Average	11.0	713.4	809
	Minimum	10.9	705.1	806
	Maximum	11.1	721.1	813
	Summation	780.2	50,648.7	57,449
	Included Data Points	71	71	71
	Total number of Data Points	71	71	71

F = Unit Offline **E = Exceedance** **C = Calibration** **S = Substituted** **I = Invalid**
M = Maintenance **¯ = Out Of Control** *** = Suspect** **U = Startup** **D = Shutdown**

Average Data

Plant: NAVAJO GENERATING STATION
Interval: 1 Minute
Type: Roll
Report Period: 05/20/2015 15:34 Through 05/20/2015 16:40
Time Online Criteria: 1 minute(s)

Source		UNIT3		
Parameter		CO2PCTC	COALFLOW	UNITLOAD
Unit		(PERCENT)	(KPPH)	(MW)
05/20/15	15:34	18.2IC	719.2	809
05/20/15	15:35	18.2IC	719.2	809
05/20/15	15:36	16.6IC	719.2	808
05/20/15	15:37	13.1IC	719.2	809
05/20/15	15:38	12.2IC	719.2	810
05/20/15	15:39	12.1IC	711.1	809
05/20/15	15:40	12.0IC	711.1	809
05/20/15	15:41	11.7IC	711.1	807
05/20/15	15:42	11.6	711.1	805
05/20/15	15:43	11.5	719.2	804
05/20/15	15:44	11.3	719.2	808
05/20/15	15:45	11.3	719.2	808
05/20/15	15:46	11.4	719.2	810
05/20/15	15:47	11.4	719.2	811
05/20/15	15:48	11.4	719.2	810
05/20/15	15:49	11.4	719.2	809
05/20/15	15:50	11.3	719.2	808
05/20/15	15:51	11.2	719.2	808
05/20/15	15:52	11.3	719.2	809
05/20/15	15:53	11.3	719.2	809
05/20/15	15:54	11.3	719.2	810
05/20/15	15:55	11.3	719.2	811
05/20/15	15:56	11.4	713.8	811
05/20/15	15:57	11.4	711.1	809
05/20/15	15:58	11.4	711.1	807
05/20/15	15:59	11.3	711.1	805
05/20/15	16:00	11.2	711.1	805
05/20/15	16:01	11.2	713.8	805
05/20/15	16:02	11.2	719.2	805
05/20/15	16:03	11.3	727.3	805
05/20/15	16:04	11.2	727.3	808
05/20/15	16:05	11.2	735.3	808
05/20/15	16:06	11.2	735.3	812
05/20/15	16:07	11.2	727.3	812
05/20/15	16:08	11.3	724.6	811
05/20/15	16:09	11.3	719.2	811
05/20/15	16:10	11.2	719.2	810
05/20/15	16:11	11.3	719.2	808
05/20/15	16:12	11.2	719.2	808
05/20/15	16:13	11.2	719.2	805
05/20/15	16:14	11.2	719.2	808
05/20/15	16:15	11.2	719.2	808
05/20/15	16:16	11.3	719.2	805
05/20/15	16:17	11.3IC	719.2	808
05/20/15	16:18	11.5IC	719.2	808
05/20/15	16:19	7.9IC	719.2	810
05/20/15	16:20	0.3IC	715.2	610
05/20/15	16:21	0.2IC	711.2	809
05/20/15	16:22	0.2IC	711.2	808
05/20/15	16:23	0.2IC	711.2	805
05/20/15	16:24	0.2IC	711.2	804

F = Unit Offline **E = Exceedance** **C = Calibration** **S = Substituted** **I = Invalid**
M = Maintenance **T = Out Of Control** *** = Suspect** **U = Startup** **D = Shutdown**

Average Data

Plant: NAVAJO GENERATING STATION
Interval: 1 Minute
Type: Roll
Report Period: 05/20/2015 15:34 Through 05/20/2015 16:40
Time Online Criteria: 1 minute(s)

Source		UNIT3		
Parameter Unit		CO2PCTC (PERCENT)	COALFLOW (KPPH)	UNITLOAD (MW)
05/20/15	16:25	0.2IC	719.3	805
05/20/15	16:26	0.2IC	719.3	806
05/20/15	16:27	0.2IC	719.3	807
05/20/15	16:28	0.2IC	719.3	806
05/20/15	16:29	0.2IC	727.5	805
05/20/15	16:30	0.2IC	727.5	807
05/20/15	16:31	0.2IC	734.2	808
05/20/15	16:32	0.2IC	735.6	810
05/20/15	16:33	0.2IC	735.6	811
05/20/15	16:34	0.2IC	735.6	812
05/20/15	16:35	0.2IC	730.2	812
05/20/15	16:36	0.2IC	722.2	812
05/20/15	16:37	0.2IC	714.1	811
05/20/15	16:38	0.2IC	711.4	809
05/20/15	16:39	0.2IC	702.0	807
05/20/15	16:40	0.2IC	695.3	804
	Average	11.3	719.1	808
	Minimum	11.2	695.3	804
	Maximum	11.6	735.6	812
	Summation	395.4	48,177.9	54,134
	Included Data Points	35	67	67
	Total number of Data Points	67	67	67

F = Unit Offline **E = Exceedance** **C = Calibration** **S = Substituted** **I = Invalid**
M = Maintenance **T = Out Of Control** *** = Suspect** **U = Startup** **D = Shutdown**

Average Data

Plant: NAVAJO GENERATING STATION
Interval: 1 Minute
Type: Roll
Report Period: 05/21/2015 17:10 Through 05/21/2015 18:15
Time Online Criteria: 1 minute(s)

Source		UNIT3		
Parameter		CO2PCTC	COALFLOW	UNITLOAD
Unit		(PERCENT)	(KPPH)	(MW)
05/21/15	17:10	11.0	705.0	810
05/21/15	17:11	11.0	705.0	810
05/21/15	17:12	11.0	705.0	811
05/21/15	17:13	11.1	705.0	812
05/21/15	17:14	11.1	705.0	812
05/21/15	17:15	11.1	705.0	811
05/21/15	17:16	11.1	705.0	810
05/21/15	17:17	11.0	705.0	810
05/21/15	17:18	11.0	705.0	809
05/21/15	17:19	11.1	705.0	809
05/21/15	17:20	11.1	705.0	809
05/21/15	17:21	11.1	705.0	809
05/21/15	17:22	11.1	705.0	810
05/21/15	17:23	11.1	705.0	810
05/21/15	17:24	11.1	705.0	810
05/21/15	17:25	11.1	705.0	809
05/21/15	17:26	11.0	705.0	810
05/21/15	17:27	11.1	705.0	810
05/21/15	17:28	11.1	705.0	810
05/21/15	17:29	11.1	705.0	810
05/21/15	17:30	11.0	705.0	809
05/21/15	17:31	11.0	705.0	808
05/21/15	17:32	10.9	707.7	807
05/21/15	17:33	10.9	713.1	808
05/21/15	17:34	10.9	713.1	810
05/21/15	17:35	11.0	713.1	811
05/21/15	17:36	11.1	713.1	811
05/21/15	17:37	11.1	713.1	812
05/21/15	17:38	11.1	713.1	812
05/21/15	17:39	11.1	713.1	812
05/21/15	17:40	11.0	713.1	812
05/21/15	17:41	11.0	713.1	812
05/21/15	17:42	11.1	713.1	812
05/21/15	17:43	11.0	713.1	812
05/21/15	17:44	11.1	713.1	811
05/21/15	17:45	11.1	713.1	809
05/21/15	17:46	11.0	713.1	809
05/21/15	17:47	11.0	713.1	808
05/21/15	17:48	10.9	713.1	808
05/21/15	17:49	10.9	713.1	809
05/21/15	17:50	10.9	713.1	810
05/21/15	17:51	10.9	713.1	810
05/21/15	17:52	11.0	713.1	810
05/21/15	17:53	11.0	713.1	809
05/21/15	17:54	10.9	713.1	809
05/21/15	17:55	10.9	713.1	810
05/21/15	17:56	11.0	713.1	811
05/21/15	17:57	11.0	713.1	811
05/21/15	17:58	11.0	713.1	811
05/21/15	17:59	11.0	713.1	812
05/21/15	18:00	11.0	713.1	812

F = Unit Offline **E = Exceedance** **C = Calibration** **S = Substituted** **I = Invalid**
M = Maintenance **T = Out Of Control** *** = Suspect** **U = Startup** **D = Shutdown**

Average Data

Plant: NAVAJO GENERATING STATION
Interval: 1 Minute
Type: Roll
Report Period: 05/21/2015 17:10 Through 05/21/2015 18:15
Time Online Criteria: 1 minute(s)

Source		UNIT3		
Parameter Unit		CO2PCTC (PERCENT)	COALFLOW (KPPH)	UNITLOAD (MW)
05/21/15	18:01	11.0	705.1	811
05/21/15	18:02	11.0	705.1	810
05/21/15	18:03	11.0	705.1	810
05/21/15	18:04	11.0	705.1	809
05/21/15	18:05	11.0	705.1	809
05/21/15	18:06	11.0	705.1	808
05/21/15	18:07	11.0	705.1	808
05/21/15	18:08	11.0	713.1	810
05/21/15	18:09	11.0	713.1	813
05/21/15	18:10	11.1	713.1	812
05/21/15	18:11	11.1	713.1	812
05/21/15	18:12	11.1	713.1	812
05/21/15	18:13	11.1	713.1	811
05/21/15	18:14	11.1	713.1	809
05/21/15	18:15	11.1	713.1	809
	Average	11.0	709.5	810
	Minimum	10.9	705.0	807
	Maximum	11.1	713.1	813
	Summation	727.8	46,825.0	53,471
	Included Data Points	66	66	66
	Total number of Data Points	66	66	66

F = Unit Offline **E = Exceedance** **C = Calibration** **S = Substituted** **I = Invalid**
M = Maintenance **T = Out Of Control** *** = Suspect** **U = Startup** **D = Shutdown**

APPENDIX 3
LABORATORY ANALYSIS

Particulate

CATALYST AIR MANAGEMENT, INC
ANALYTICAL SUMMARY
NGS 1 5/18/2015

ACETONE BLANK

SAMPLE ID	VOLUME ml	BEAKER WEIGHT, g INITIAL	BEAKER WEIGHT, g FINAL	FINAL-INI g
Blank	200	99.4092	99.4093	0.0001

LOT NUMBER = 150962
DENSITY = 0.7849 g/ml

ACETONE BLANK = 6.37E-07 g/g

PARTICULATE WEIGHT

SAMPLE ID	ACETONE VOLUME ml	BEAKER WEIGHT g INITIAL	BEAKER WEIGHT g FINAL	BEAKER WEIGHT g FINAL-INI g	FILTER WEIGHT INITIAL	FILTER WEIGHT FINAL	FILTER WEIGHT FINAL-INI g	ACETONE PLUS FILTER g	ACETONE WASH BLANK g	MAXIMUM ALLOWABLE BLANK g	TOTAL g	mg
Run 1	200	97.6302	97.6375	0.0073	0.3755	0.3853	0.0098	0.0171	0.0001	0.0016	0.0170	17.0
Run 2	200	102.8964	102.9048	0.0084	0.3735	0.3957	0.0222	0.0306	0.0001	0.0016	0.0305	30.5
Run 3	200	105.6218	105.6269	0.0051	0.3748	0.3982	0.0234	0.0285	0.0001	0.0016	0.0284	28.4

CATALYST AIR MANAGEMENT, INC
ANALYTICAL SUMMARY
NGS 2 5/20/2015

ACETONE BLANK

SAMPLE ID	VOLUME ml	BEAKER WEIGHT, g INITIAL	BEAKER WEIGHT, g FINAL	FINAL-INI g
Blank	200	99.4092	99.4093	0.0001

LOT NUMBER = 150962
DENSITY = 0.7849 g/ml

ACETONE BLANK = 6.37E-07 g/g

PARTICULATE WEIGHT

SAMPLE ID	ACETONE VOLUME ml	BEAKER WEIGHT g INITIAL	FINAL	FINAL-INI g	FILTER WEIGHT INITIAL	FINAL	FINAL-INI g	ACETONE PLUS FILTER g	ACETONE WASH BLANK g	MAXIMUM ALLOWABLE BLANK g	TOTAL g	mg
Run 1	200	103.2113	103.2199	0.0086	0.3768	0.3864	0.0096	0.0182	0.0001	0.0016	0.0181	18.1
Run 2	200	98.0105	98.0317	0.0212	0.3749	0.3816	0.0067	0.0279	0.0001	0.0016	0.0278	27.8
Run 3	220	100.6280	100.6416	0.0136	0.3754	0.3835	0.0081	0.0217	0.0001	0.0017	0.0216	21.6

CATALYST AIR MANAGEMENT, INC
ANALYTICAL SUMMARY
NGS 3 5/21/2015

ACETONE BLANK

SAMPLE ID	VOLUME ml	BEAKER WEIGHT, g INITIAL	BEAKER WEIGHT, g FINAL	FINAL-INI g
Blank	200	99.4092	99.4093	0.0001

LOT NUMBER = 150962
DENSITY = 0.7849 g/ml

ACETONE BLANK = 6.37E-07 g/g

PARTICULATE WEIGHT

SAMPLE ID	ACETONE VOLUME ml	BEAKER WEIGHT g INITIAL	BEAKER WEIGHT g FINAL	BEAKER WEIGHT g FINAL-INI g	FILTER WEIGHT INITIAL	FILTER WEIGHT FINAL	FILTER WEIGHT FINAL-INI g	ACETONE PLUS FILTER g	ACETONE WASH BLANK g	MAXIMUM ALLOWABLE BLANK g	TOTAL g	mg
Run 1	200	100.2531	100.2620	0.0089	0.3765	0.3818	0.0053	0.0142	0.0001	0.0016	0.0141	14.1
Run 2	220	104.1604	104.1711	0.0107	0.3757	0.3811	0.0054	0.0161	0.0001	0.0017	0.0160	16.0
Run 3	200	104.9817	104.9912	0.0095	0.3765	0.3824	0.0059	0.0154	0.0001	0.0016	0.0153	15.3

APPENDIX 4
REFERENCE METHOD QUALITY ASSURANCE

Isokinetic Sampling Equipment

Catalyst Air Management, Inc.

METER BOX NUMBER: **020**
DATE: 05/07/15
CALIBRATED BY: Streno

BENCH METER CALIBRATION FACTOR: 0.998

Orifice Manometer Setting (ΔH) In. H_2O	Standard Test Meter Start: End:	(V_w) ft^3	Dry Gas Meter Start: End:	(V_d) ft^3	Standard Test Meter (T_w) °F	Dry Gas Meter Inlet (T_{di}) °F	Outlet (T_{do}) °F	Average (T_d) °F	Barometric Pressure (P_b) in. of Hg	Time (Time) min.	Y_i	ΔH@i	Q_m	K_m
0.50	829.911	**5.146**	433.055	**5.175**	63.0	68.0	66.0	67.0	29.29	12.00	**1.00**	**1.54**	0.430	0.774
	835.057		438.230											
1.00	835.572	**5.000**	438.767	**5.071**	64.0	71.0	69.0	70.0	29.29	8.50	**0.99**	**1.62**	0.595	0.755
	840.572		443.838											
2.00	841.109	**5.071**	444.454	**5.009**	66.0	72.0	70.0	71.0	29.29	6.00	**1.01**	**1.66**	0.833	0.746
	846.180		449.463											
3.00	861.412	**5.036**	465.018	**5.156**	71.0	75.0	74.0	74.5	29.29	5.00	**0.97**	**1.64**	1.030	0.750
	866.448		470.174											
4.00	855.330	**5.773**	458.841	**5.873**	70.0	76.0	73.0	74.5	29.29	5.00	**0.98**	**1.69**	1.171	0.739
	861.103		464.714											
										Average:	**0.99**	**1.63**		

FORMULAS

$$Y_i = \frac{(V_w)(P_b)(T_d + 460)}{(V_d)\left(P_b + \frac{H}{13.6}\right)(T_w + 460)}$$

$$\Delta H@i = \frac{0.9244}{K_m^{\,2}}$$

$$K_m = Q_m\sqrt{\frac{(P_b)(29)}{(T_{do} + 460)(\Delta H)}}$$

$$Q_m = \frac{(V_d)(T_{do} + 460)}{(Time)(T_{do} + 460)}$$

Catalyst Air Management, Inc.

POST-TEST METER BOX CALIBRATION

METER BOX NUMBER:	020		
DATE:	06/17/15		
CALIBRATED BY:	S.Taylor	PRETEST Y_i:	0.99
		POST-TEST Y_i:	0.99
BENCH METER CALIBRATION FACTOR:	0.998	DIFFERENCE, %	0.29

Orifice Manometer Setting (ΔH) In. H_2O	Standard Test Meter Start: End:	(V_w) ft^3	Dry Gas Meter Start: End:	(V_d) ft^3	Standard Test Meter (T_w) °F	Dry Gas Meter Inlet (T_{di}) °F	Outlet (T_{do}) °F	Average (T_d) °F	Barometric Pressure (P_b) in. of Hg	Time (Time) min.	Y_i	ΔH@i	Q_m	K_m
0.34	359.898	**3.681**	832.955	**3.710**	69.0	71.0	71.0	71.0	29.28	10.00	**0.99**	**1.43**	0.371	0.805
	363.579		836.665											
0.34	363.579	**3.671**	836.665	**3.680**	69.0	72.0	71.0	71.5	29.28	10.00	**1.00**	**1.45**	0.368	0.797
	367.250		840.345											
0.34	367.250	**3.663**	840.345	**3.699**	70.0	73.0	72.0	72.5	29.28	10.00	**0.99**	**1.44**	0.370	0.801
	370.913		844.044											

Average: **0.99** **1.44**

FORMULAS

$$Y_i = \frac{(V_w)(P_b)(T_d + 460)}{(V_d)\left(P_b + \frac{H}{13.6}\right)(T_w + 460)}$$

$$\Delta H@i = \frac{0.9244}{K_m^{\,2}}$$

$$K_m = Q_m\sqrt{\frac{(P_b)(29)}{(T_{do} + 460)(\Delta H)}}$$

$$Q_m = \frac{(V_d)(T_{do} + 460)}{(Time)(T_{do} + 460)}$$

CATALYST AIR MANAGEMENT, INC

Balance Calibration Check:
Navajo 1

Balance ID: CAM-FB-4
DATE: 5/17/2015
CALIBRATED BY: Nicely

Ohaus (200g)	200.00
Field Balance	200.00
Difference	0.00

CATALYST AIR MANAGEMENT, INC

Barometer Calibration Check
Navajo

DATE: 5/13/2015
CALIBRATED BY: Josh Nicely

Hg in glass Barometer (in Hg)	29.45
Field Barometer (in Hg)	29.47
Difference	0.02

CATALYST AIR MANAGEMENT, INC.

K-TYPE THERMOCOUPLE CALIBRATION
Post Test Calibration Check
SRP - NGS

Thermocouple No:	**CAM 30**
DATE:	6/17/2015
CALIBRATED BY:	King

AVG STACK TEMPERATURE:	**117**

Difference % Absolute	**0.**7
Acceptance Criteria %	1.5

Std Thermometer	121
Thermocouple	117
Difference	4

CATALYST AIR MANAGEMENT, INC.

K-TYPE THERMOCOUPLE CALIBRATION
Post Test Calibration Check
SRP - NGS

Thermocouple No:	**CAM P-14**
DATE:	6/17/2015
CALIBRATED BY:	King

AVG STACK TEMPERATURE:	**117**

Difference % Absolute	**-0.2**
Acceptance Criteria %	1.5

Std Thermometer	118
Thermocouple	119
Difference	-1

Catalyst Air Management Inc.

Type S Pitot Tube Inspection/Calibration

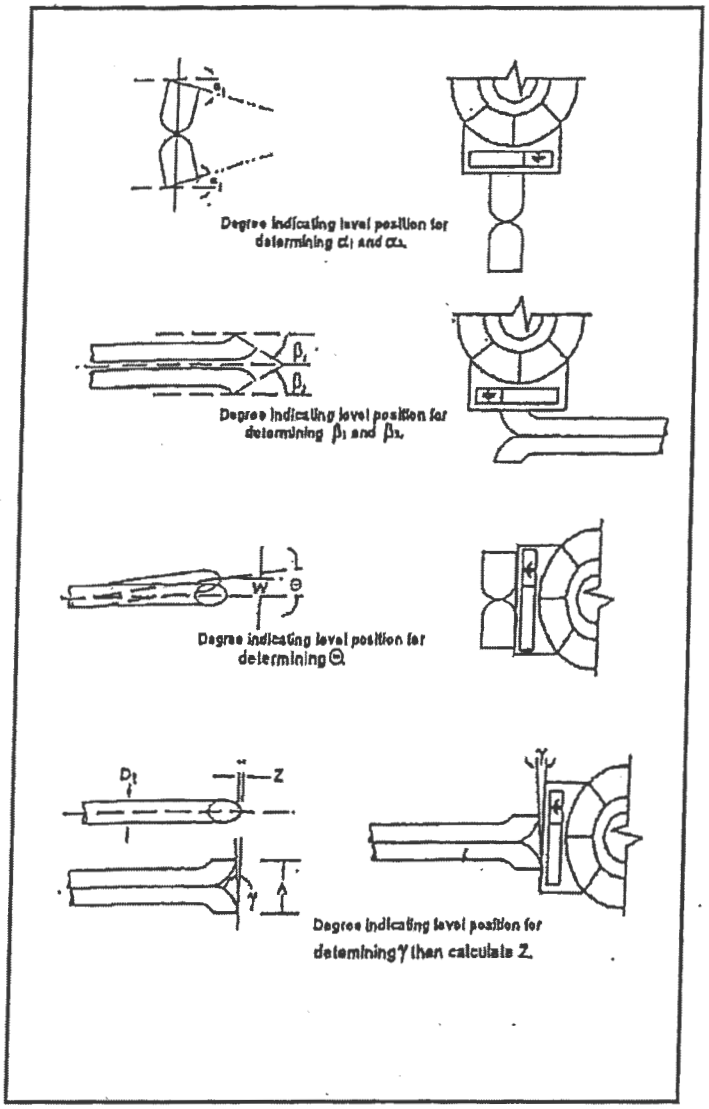

Level and Perpendicular?	yes
Obstructed?	no
Damaged?	no

α1 (-10° ≤ α1 ≤ +10°)	0
α2 (-10° ≤ α2 ≤ +10°)	0
β1 (-5° ≤ β1 ≤ +5°)	0
β2 (-5° ≤ β2 ≤ +5°)	0
γ	0
θ	0

z = A tan γ (≤ 0.125")	0
w = A tan θ (≤ 0.03125")	0
Dt (3/16" ≤ Dt ≤ 3/8")	.372
A	.956

A/2Dt (1.05 ≤ PA/Dt ≤ 1.5)	1.28

QA/QC Check
Completeness ✓ Legibility ✓ Accuracy ✓ Specifications ✓ Reasonableness ✓

Certification:
I certify that the Type S pitot tube/probe ID# CAM 137 meets or exceeds all specifications, criteria and/or applicable design features and is hereby assigned a pitot tube calibration factor Cp of 0.84.

Certified by: Kelly [signature] 5-13-15 [signature] 5-13-15
Personnel (Signature/Date) Team Leader (Signature/Date)

Catalyst Air Management Inc.

Type S Pitot Tube Inspection/Calibration

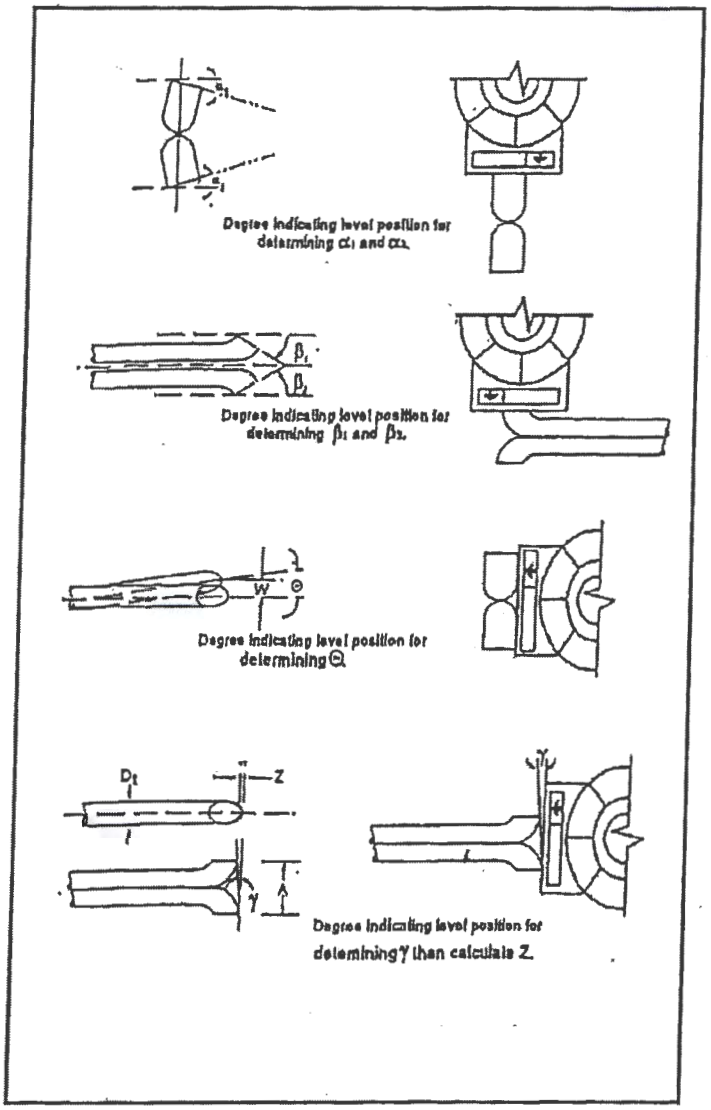

Level and Perpendicular?	yes
Obstructed?	no.
Damaged?	no

α1 (-10° ≤ α1 ≤ +10°)	0
α2 (-10° ≤ α2 ≤ +10°)	0
β1 (-5° ≤ β1 ≤ +5°)	0
β2 (-5° ≤ β2 ≤ +5°)	0
γ	0
θ	0

z = A tan γ (≤ 0.125")	0
w = A tan θ (≤ 0.03125")	0
Dt (3/16" ≤ Dt ≤ 3/8")	.372
A	.949

A/2Dt (1.05 ≤ PA/Dt ≤ 1.5)	1.28

QA/QC Check
Completeness ✓ Legibility ✓ Accuracy ✓ Specifications ✓ Reasonableness ✓

Certification:
I certify that the Type S pitot tube/probe ID# CAM 10-01 meets or exceeds all specifications, criteria and/or applicable design features and is hereby assigned a pitot tube calibration factor Cp of 0.84.

Certified by: [signature] 5-13-15 [signature] 5-13-15

Personnel (Signature/Date) Team Leader (Signature/Date)

Catalyst Air Management Inc. **Nozzle Calibration Form**

Client/Plant SRP / Navajo

Location Stack Units 1, 2, 3

Date 5-17-15

Prepared By Josh Nicely

Nozzle # CAM-03

1st 0.235 2nd 0.235 3rd 0.235 AVG 0.235

Nozzle # CAM-210

1st 0.237 2nd 0.233 3rd 0.235 AVG 0.235

Nozzle # _____

1st _____ 2nd _____ 3rd _____ AVG _____

Nozzle # _____

1st _____ 2nd _____ 3rd _____ AVG _____

Nozzle # _____

1st _____ 2nd _____ 3rd _____ AVG _____

Nozzle # _____

1st _____ 2nd _____ 3rd _____ AVG _____

Calibration Gas Specification Sheets

CERTIFICATE OF BATCH ANALYSIS

Grade of Product: CEM-CAL ZERO

Part Number:	NI CZ15A	Reference Number:	40-400482511-1
Cylinder Analyzed:	EB0062488	Cylinder Volume:	142.0 CF
Laboratory:	MID - Saint Louis SGL (SAP) - MO	Cylinder Pressure:	2000 PSIG
Analysis Date:	Feb 19, 2015	Valve Outlet:	580
Lot Number:	40-400482511-1		

Expiration Date: Feb 19, 2023

ANALYTICAL RESULTS

Component		Requested Purity		Certified Concentration
CARBON DIOXIDE	<	1.0 PPM	<LDL	0.12 PPM
NOx	<	0.1 PPM	<	0.1 PPM
SO2	<	0.1 PPM	<	0.1 PPM
THC	<	0.1 PPM		0.10 PPM
CARBON MONOXIDE	<	0.5 PPM	<LDL	0.12 PPM
NITROGEN		99.9995 %		99.9995 %

Permanent Notes: Airgas certifies that the contents of this cylinder meet the requirements of 40 CFR 72.2

Cylinders in Batch:

CC203444, EB0062291, EB0062299, EB0062315, EB0062317, EB0062323, EB0062326, EB0062476, EB0062477, EB0062480, EB0062488, EB0062490, EB0063277, EB0063301, EB0063309, EB0063315, EB0063468, EB0063488, EB0063504, EB0063510, EB0063520, EB0063530, EB0063531, EB0063532, EB0063537, EB0063577

Impurities verified against analytical standards traceable to NIST by weight and/or analysis.

Signature on file

Approved for Release

CERTIFICATE OF ANALYSIS

Grade of Product: EPA Protocol

Part Number:	E03NI78E15A1066	Reference Number:	54-124457642-4
Cylinder Number:	CC258159	Cylinder Volume:	151.1 CF
Laboratory:	ASG - Chicago - IL	Cylinder Pressure:	2015 PSIG
PGVP Number:	B12014	Valve Outlet:	590
Gas Code:	CO2,O2,BALN	Certification Date:	Oct 09, 2014

Expiration Date: Oct 09, 2022

Certification performed in accordance with "EPA Traceability Protocol for Assay and Certification of Gaseous Calibration Standards (May 2012)" document EPA 600/R-12/531, using the assay procedures listed. Analytical Methodology does not require correction for analytical interference. This cylinder has a total analytical uncertainty as stated below with a confidence level of 95%. There are no significant impurities which affect the use of this calibration mixture. All concentrations are on a volume/volume basis unless otherwise noted.

Do Not Use This Cylinder below 100 psig, i.e. 0.7 megapascals.

ANALYTICAL RESULTS

Component	Requested Concentration	Actual Concentration	Protocol Method	Total Relative Uncertainty	Assay Dates
CARBON DIOXIDE	10.00 %	10.05 %	G1	+/- 1.0% NIST Traceable	10/09/2014
OXYGEN	12.00 %	11.83 %	G1	+/- 0.9% NIST Traceable	10/09/2014
NITROGEN	Balance				

CALIBRATION STANDARDS

Type	Lot ID	Cylinder No	Concentration	Uncertainty	Expiration Date
NTRM	06120402	CC184369	19.66 % CARBON DIOXIDE/NITROGEN	+/- 0.5%	May 01, 2016
NTRM	06120210	CC195743	20.90 % OXYGEN/NITROGEN	+/- 0.4%	Dec 01, 2015

ANALYTICAL EQUIPMENT

Instrument/Make/Model	Analytical Principle	Last Multipoint Calibration
CO2-1 HORIBA VIA-510 V1E3H7P5	NDIR	Oct 02, 2014
O2-1 HORIBA MPA-510 3VUYL9NR	Paramagnetic	Oct 04, 2014

Triad Data Available Upon Request

Signature on file

Approved for Release

Airgas

CERTIFICATE OF ANALYSIS

Grade of Product: EPA Protocol

Part Number:	E03NI61E15A02E5	Reference Number:	54-124307351-1
Cylinder Number:	CC182669	Cylinder Volume:	157.4 CF
Laboratory:	ASG - Chicago - IL	Cylinder Pressure:	2015 PSIG
PGVP Number:	B12012	Valve Outlet:	590
Gas Code:	CO2,O2,BALN	Certification Date:	Mar 12, 2012

Expiration Date: Mar 12, 2020

Certification performed in accordance with "EPA Traceability Protocol for Assay and Certification of Gaseous Calibration Standards (May 2012)" document EPA 600/R-12/531, using the assay procedures listed. Analytical Methodology does not require correction for analytical interference. This cylinder has a total analytical uncertainty as stated below with a confidence level of 95%. There are no significant impurities which affect the use of this calibration mixture. All concentrations are on a volume/volume basis unless otherwise noted.

Do Not Use This Cylinder below 100 psig, i.e. 0.7 megapascals.

ANALYTICAL RESULTS

Component	Requested Concentration	Actual Concentration	Protocol Method	Total Relative Uncertainty	Assay Dates
CARBON DIOXIDE	17.00 %	16.70 %	G1	+/- 1% NIST Traceable	03/12/2012
OXYGEN	22.00 %	21.78 %	G1	+/- 1% NIST Traceable	03/12/2012
NITROGEN	Balance				

CALIBRATION STANDARDS

Type	Lot ID	Cylinder No	Concentration	Uncertainty	Expiration Date
NTRM	08061321	CC255428	20.09 % CARBON DIOXIDE/NITROGEN	+/- 0.6%	Jul 15, 2012
NTRM/O2	06120209	CC195927	20.9 % OXYGEN/NITROGEN	+/- 0.4%	Dec 01, 2015

ANALYTICAL EQUIPMENT

Instrument/Make/Model	Analytical Principle	Last Multipoint Calibration
CO2-1 HORIBA VIA-510 V1E3H7P5	NDIR	Feb 26, 2012
O2-1 HORIBA MPA-510 3VUYL9NR	Paramagnetic	Feb 27, 2012

Triad Data Available Upon Request

Signature on file

Approved for Release

Job Notes

Salt River Project-NGS

Personnel: Josh Nicely
Kellen Streno
Larry Whicher
Matt Norrod

Job Coordinator: L.D. Shakespeare

State: no

Schedule:

5/16/2015	setup
5/17/2015	Unit 1 low/mid flow
	Unit 2 low flow
5/18/2015	Unit 2 mid flow
5/18/2015	Unit 1 PM
5/20/2015	Unit 2 high load flows / gas RATA / compliance PM
5/21/2001	Unit 3 high load flow / PM runs / gases

Notes:

5/17/2015 No issues with low/mid flows Unit 1

5/18/2015 No issues low/mid flows Unit 2
Performed 1 baseline PM run.
The monitor continued to climb to around 70 and L.D. didn't believe those numbers so we spent time cleaning the system.

L.D., Walter Begay, and I cleaned and performed internal cals, and audit filter checks.
The monitor seemed to be working correctly.
L.D. had controls put back in place to bring the PM down to a more reasonable level.
Performed 2 more baseline PM run.

5/20/2015 Lost the temperature readout on 030 at the end of run 5 high flows so changed to 020.
Kellen and I fixed 030 by stripping and cleaning the display wires.

5/21/2015 We did the first 5 flow runs and I punched in the first run to check and we were 7% lower than them.
L.D. and I had discussed re-characterizing the flow moniters and he decided to try this one since we hadn't done the off load flows yet.

He changed his coefficient and brought his flow down about 3%.
We restarted the high flows.

APPENDIX 5

ASTM D7036-04 AETB INFORMATION

CATALYST

AIR MANAGEMENT, INC.

QUALITY POLICY

The Quality System established by Catalyst Air Management, Inc., and described in the Quality Manual, demonstrates our commitment to the principle of providing air emissions test data of known and documented quality on a consistent basis.

As a service to our customers, and to achieve our internal goal of continuous quality improvement, we will conform to the requirements documented in our Quality Manual and to ASTM D7036.

Michael J. Taylor, President

Signature: _____

Date: 3-12-12

Jeffrey K. Ferguson, Vice President

_____

Date: 2-27-12

CATALYST

AIR MANAGEMENT, INC.

I have attended training in all aspects of ASTM D-7036 and the associated application to facilities regulated under 40 CFR Part 75.

I understand the significance of maintaining QSTI certification for each test method that I will be asked to perform, and will at all times ensure that I am following the approved test protocol for the test program.

All test projects conducted under my supervision will conform to the Catalyst Air Management Quality System, as described in the Quality Manual, and to ASTM D-7036 in all respects.

Name: Joshua A. Nicely

Signature: Joshua A. Nicely

Date: 2-25-2012

QUALIFIED INDIVIDUAL
CERTIFICATION INFORMATION

Last Name	First Name	M.I.	AETB Name	AETB Phone Number	AETB Email	Exam Date	Exam Provider	Exam Provider Email	Comment
Nicely	Joshua	A	Catalyst Air Management	865-531-0075	support@catalystair.com	09/12/2013	Source Evaluation Society	qstiprogram@gmail.com	Group 1 Gas Vol. & PM
Nicely	Joshua	A	Catalyst Air Management	865-531-0075	support@catalystair.com	04/19/2013	Source Evaluation Society	qstiprogram@gmail.com	Group 2 Manual Gas
Nicely	Joshua	A	Catalyst Air Management	865-531-0075	support@catalystair.com	08/12/2011	Source Evaluation Society	qstiprogram@gmail.com	Group 3 Instrumental Gas
Nicely	Joshua	A	Catalyst Air Management	865-531-0075	support@catalystair.com	11/24/2014	Source Evaluation Society	qstiprogram@gmail.com	Group 4 Hazardous Metals

SOURCE EVALUATION SOCIETY

Qualified Source Testing Individual

LET IT BE KNOWN THAT

JOSHUA A. NICELY

HAS SUCCESSFULLY PASSED A COMPREHENSIVE EXAMINATION AND SATISFIED EXPERIENCE REQUIREMENTS IN ACCORDANCE WITH THE GUIDELINES ISSUED BY THE SES QUALIFIED SOURCE TEST INDIVIDUAL REVIEW BOARD FOR

MANUAL GAS VOLUME MEASUREMENTS AND ISOKINETIC PARTICULATE SAMPLING METHODS

ISSUED THIS 12TH DAY OF SEPTEMBER 2013 AND EFFECTIVE UNTIL SEPTEMBER 11TH 2018

Peter R. Westlip, QSTI/QSTO Review Board

C. David Bagwell, QSTI/QSTO Review Board

Peter S. Pakainis, QSTI/QSTO Review Board

Karen D. Kajiya-Mills , QSTI/QSTO Review Board

Theresa Lowe, QSTI/QSTO Review Board

Glenn C. England, QSTI/QSTO Review Board

APPLICATION NO. 2008-142

SOURCE EVALUATION SOCIETY

Qualified Source Testing Individual

LET IT BE KNOWN THAT

JOSHUA A. NICELY

HAS SUCCESSFULLY PASSED A COMPREHENSIVE EXAMINATION AND SATISFIED EXPERIENCE REQUIREMENTS IN ACCORDANCE WITH THE GUIDELINES ISSUED BY THE SES QUALIFIED SOURCE TEST INDIVIDUAL REVIEW BOARD FOR

MANUAL GASEOUS POLLUTANTS SOURCE SAMPLING METHODS

ISSUED THIS 19TH DAY OF APRIL 2013 AND EFFECTIVE UNTIL APRIL 18TH 2018

Peter R. Westlin, QSTI/QSTO Review Board

Peter S. Pakalnis, QSTI/QSTO Review Board

Theresa Lowe, QSTI/QSTO Review Board

C. David Bagwell, QSTI/QSTO Review Board

Karen D. Kajiya-Mills, QSTI/QSTO Review Board

Glenn C. England, QSTI/QSTO Review Board

APPLICATION NO. 2008-142

SOURCE EVALUATION SOCIETY

Qualified Source Testing Individual

LET IT BE KNOWN THAT

JOSHUA A. NICELY

HAS SUCCESSFULLY PASSED A COMPREHENSIVE EXAMINATION AND SATISFIED EXPERIENCE REQUIREMENTS IN ACCORDANCE WITH THE GUIDELINES ISSUED BY THE SES QUALIFIED SOURCE TEST INDIVIDUAL REVIEW BOARD FOR

GASEOUS POLLUTANTS INSTRUMENTAL SAMPLING METHODS

ISSUED THIS 24TH DAY OF AUGUST 2011 AND EFFECTIVE UNTIL AUGUST 23RD , 2016

Peter R. Westlin, QSTI/QSTO Review Board

C. David Bagwell, QSTI/QSTO Review Board

Peter S. Pakalnis, QSTI/QSTO Review Board

Karen D. Kajiya-Mills , QSTI/QSTO Review Board

LeRoy Owens, QSTI/QSTO Review Board

Glenn C. England, QSTI/QSTO Review Board

APPLICATION NO. 2008-142

SOURCE EVALUATION SOCIETY

Qualified Source Testing Individual

LET IT BE KNOWN THAT

JOSHUA A. NICELY

HAS SUCCESSFULLY PASSED A COMPREHENSIVE EXAMINATION AND SATISFIED EXPERIENCE REQUIREMENTS IN ACCORDANCE WITH THE GUIDELINES ISSUED BY THE SES QUALIFIED SOURCE TEST INDIVIDUAL REVIEW BOARD FOR

HAZARDOUS METALS MEASUREMENT SAMPLING METHODS

ISSUED THIS 24TH DAY OF NOVEMBER 2014 AND EFFECTIVE UNTIL NOVEMBER 23RD, 2019

Peter R. Westlin, QSTI/QSTO Review Board

Peter S. Pakalnis, QSTI/QSTO Review Board

Theresa Lowe, QSTI/QSTO Review Board

C. David Bagwell, QSTI/QSTO Review Board

Karen D. Kajiya-Mills , QSTI/QSTO Review Board

Glenn C. England, QSTI/QSTO Review Board

APPLICATION NO. 2008-142

APPENDIX 6
SAMPLE CALCULATIONS

SAMPLE EQUATIONS
FOR ISOKINETIC SAMPLING

CALCULATIONS FOR FLUE GAS VOLUME AND ISOKINETIC RATIO

Time	Dry Gas Meter Ft^3	Pitot ΔP In. H_2O	Orifice ΔH In. H_2O	Dry Gas Temp.°F In	Out	Flue Gas Static Pressure In. H_2O	Stack Temp.°F
T	V_m	Δp	ΔH	TMI	TMO	P_g	T_s

1. D_n = Nozzle Diameter (inches)

1a. A_n = Area of Nozzle (ft^2)

2. P_{bar} = Barometric Pressure (in. Hg)

3. TT = Net Sampling Time (minutes)

4. V_m = V_m Final - V_m Initial = Sample Gas Volume (Ft^3)

5. T_m = Average Dry Gas Temperature at Meter (°F)

$$T_m = \frac{Avg.TMI + Avg.TMO}{2}$$

6. Δp = Velocity head of stack gas (in. H_2O)

7. ΔH = Average Orifice Pressure Drop (in.H_2O)

8. Volume of dry gas sampled at standard conditions[a] (DSCF)

$$V_{m(std)} = \frac{(17.64)(V_m)(Y)\left(P_{bar} + \frac{\Delta H}{13.6}\right)}{(T_m + 460)}$$

9. V_{lc} = Total Water Collected = gm H_2O Silica gel + ml Imp. H_2O = ml

10. Volume of water vapor at standard conditions[b] (SCF)

$$V_{w(std)} = 0.0471(V_{lc}) = SCF$$

11. Percent moisture in flue gas

$$\%M = \frac{100(V_{w(std)})}{V_{m(std)} + V_{w(std)}}$$

12. Mole fraction of water vapor in flue gas

$$B_{ws} = \frac{\%M}{100}$$

13. Molecular Weight of dry flue gas

$$M_d = 0.44(\%CO_2) + 0.32(\%O_2) + 0.28(\%N_2 + \%CO)$$

13a. %EA = % Excess Air =

$$\frac{[(\%O_2) - 0.5(\%CO)]}{[0.264(\%N_2)] - [(\%O_2) - 0.5(\%CO)]} x100$$

14. Molecular weight of wet flue gas

$$M_s = M_d(1 - B_{ws}) + 18(B_{ws})$$

15. A = Cross-sectional area of stack (Ft^2)

$$\frac{\pi r^2}{144}$$

16. P_s = Flue gas pressure (in, Hg)

$$P_s = P_{bar} + P_g$$

NOTE: $$P_g(Hg) = \frac{P_g(in.H_2O)}{13.6}$$

17. T_s = Absolute stack temperature (°R)

$$T_s = 460 + t_s$$

18. Flue velocity at stack conditions (FT/SEC)

$$V_s = (K_p)(C_p)\left[\left(\sqrt{\Delta p}\right)avg\right]\sqrt{\frac{T_s(avg)}{P_s * M_s}}$$

C_p = pitot tube coefficient
K_p = pitot tube constant = 85.49ft/sec

19. Flue gas volumetric flow rate at standard conditions[b] (SCFM)

$$Q_s = (V_s)(A)\left(\frac{528}{T_s(avg.)}\right)\left(\frac{P_s}{29.92}\right)(60)$$

20. Flue gas volumetric flow rate at standard conditions[c] (DSCFM)

$$Q_{sd} = (1 - B_{ws})(V_s)(A)\left(\frac{528}{T_s(avg.)}\right)\left(\frac{P_s}{29.92}\right)(60)$$

21. Flue gas volumetric flow rate at stack conditions (ACFM)

$$Q_a = (V_s)(A)(60)$$

22. Percent Isokinetic

$$\%I = \frac{K_4(T_s)(V_{m(std)})}{P_s V_s A_n \Theta(1 - B_{ws})}$$

K_4 = 0.09450
$\Theta = time(\min)$

NOTES: [a]Dry standard cubic feet at 68°F, 29.92 in. Hg
[b]Standard conditions at 68°F, 29.92 in. Hg
[c]Dry standard cubic feet per minute at 68°F, 29.92 in. Hg

II. Calculations for grain loading and emission rates

23. Particulate (gr/DSCF)

$$gr / DSCF = 0.01543\left(\frac{mg}{V_{m(std)}}\right)$$

24. Particulate at stack conditions (gr/ACF)

$$gr / ACF = \frac{17.64 gr / DSCF(P_s)(M_d)}{(T_s + 460)}$$

25. Particulate (lbs/hr), concentration method

$$lbs / hr = 0.00857 * gr / DSCF * Q_{sd}$$

26. Particulate (lbs/hr), area method

$$lbs / hr = 0.132 * \frac{particulate(g) * A}{\frac{(D_n)^2}{2} * TT}$$

27. Particulate (lbs/mmBtu)

$$\frac{lbs / hr}{10^6 Btu / hr}$$

28. Particulate (lbs/ton)

$$lbs / ton = \frac{lbs / hr}{tons / hr}$$

29. Particulate (lbs/mmBtu), F-Factor Method

Using O_2 = $\frac{(0.01543)(mg)(F - Factor)(20.9)}{(7000)(V_{m(std)})(20.9 - \%O_2)}$

30. Particulate (gr/dscf) @ % Excess Air

gr/dscf @ % EA = ((100 + %EA)/150) (gr/dscf)

31. Particulate (lbs/mmBtu), F-Factor Method (Continued)

$$\text{Using } CO_2 = \frac{(0.01543)(mg)(F-Factor)(100)}{(7000)(V_{m(std)})(\%CO_2)}$$

32. F-Factor (dscf/mmBtu)

Wet Basis (F_w)

$$F_w = \frac{10^6\, Btu/mmBtu\left[5.57(\%H)+1.53(\%C)+0.57(\%S)+0.14(\%N)-0.46(\%O_2)+0.21(\%H_2O)\right]}{GCV_w}$$

Dry Basis (F_d)

$$F_d = \frac{10^6\, Btu/mmBtu\left[3.64(\%H)+1.53(\%C)+0.57(\%S)+0.14(\%N)-0.46(\%O_2)\right]}{GCV_d}$$

Carbon Basis (F_c)

$$F_c = \frac{10^6\, Btu/mmBtu\left[0.321(\%C)\right]}{GCV_d}$$

Salt River Project
NOS Unit 1 Run 1

CALCULATIONS QUALITY ASSURANCE CHECK

$$V_{std} = \frac{17.64\,(45.354)(.99)\left(25.00 + 1.5/13.6\right)}{(66+460)} = 37.829$$

$$V_w = 0.0471\,(127.0) = 5.982$$

$$\%M = 100\,(5.982)/(37.829 + 5.982) = 13.65$$

$$B_{ws} = 13.65/100 = 0.1365$$

$$M_d = .44(12.6) + .32(6.9) + .28(100 - 19.5) = 30.29$$

$$M_s = 30.29(1 - .1365) + 18(.1365) = 28.61$$

$$P_s = 25.00 + (1.50/13.6) = 25.11$$

$$T_s = (117 + 460) = 577$$

$$V_s = (85.49)(0.84)(.791)\sqrt{\frac{577}{(25.11)(28.61)}} = 50.9$$

$$Q_{std} = (50.9)(1 - .1365)(948.4)(528/577)(25.11/29.92)(60) = 1{,}920{,}300$$

$$\%I = \frac{(0.0945)(577)(37.829)}{(1 - .1365)(3.01 \times 10^{-4})(25.11)(50.9)(60)} = 103.4\,\%$$

$$g/dscf = 0.01543\,(17.0/37.829) = 0.007$$

$$lb/hr = 0.007\,(0.00857)(1{,}920{,}277) = 114.114$$

$$lb/MWhr = 114.114/814 = 0.14$$

Salt River project
NGS Unit 2 Run 1

CALCULATIONS QUALITY ASSURANCE CHECK

$$V_m(std) = \frac{(17.64)(47.854)(.99)\left(25.10 + 1.642/13.6\right)}{(68+460)} = 39.939$$

$$V_w = 0.0471(125) = 5.888$$

$$\%M = 100(5.888)/(39.939 + 5.888) = 12.85$$

$$B_{ws} = 12.85/100 = .1285$$

$$M_d = .44(12.7) + .32(7.0) + .28(100 - 19.7) = 30.31$$

$$M_s = 30.31(1 - .1285) + 18(.1285) = 28.73$$

$$P_s = 25.10 + (1.80/13.6) = 25.23$$

$$T_s = (118 + 460) = 578$$

$$V_s = (85.44)(.84)(.823)\sqrt{\frac{578}{(25.23)(28.73)}} = 52.7$$

$$Q_{std} = (52.7)(1 - .1285)(948.4)(528/578)(25.23/29.92)(60) = 2,015,800$$

$$\%I = \frac{(0.0945)(578)(39.939)}{(1 - .1285)(25.23)(3.01 \times 10^{-4})(60)(52.7)} = 104.0\%$$

$$gr/dscf = 0.01543(18.1/39.939) = 0.007$$

$$lb/hr = 0.007(0.00857)(2,015,753) = 120.801$$

$$lb/MWh = 120.8/806 = 0.15$$

Salt River Project

NGS Unit 3 Run 1

CALCULATIONS QUALITY ASSURANCE CHECK

$$V_m(std) = \frac{(17.64)(45.833)(.99)(25.03 + 1.517/13.6)}{(73 + 460)} = 37.785$$

$$V_{w(s)} = 0.0471(132) = 6.217$$

$$\%H = 100(6.217)/(37.785 + 6.217) = 14.13$$

$$B_{ws} = 14.13/100 = 0.1413$$

$$M_d = .44(13.3) + .32(6.0) + .28(100 - 19.2) = 30.37$$

$$M_s = 30.37(1 - .1413) + 18(.1413) = 28.62$$

$$P_s = 25.03 + (1.6/13.6) = 25.15$$

$$T_s = 116 + 460 = 576$$

$$V_s = (85.49)(.84)(.745)\sqrt{\frac{576}{(25.15)(28.62)}} = 51.1$$

$$q_{std} = (51.1)(1 - .1413)(945.4)(528/576)(25.15/29.92)(60) = 1,923,000$$

$$\%I = \frac{(0.0945)(576)(37.785)}{(51.1)(25.15)(1 - .1413)(3.01 \times 10^{-4})(60)} = 103.2\ \%$$

$$gr/dscf = 0.01543(15.3/37.785) = 0.006$$

$$lb/hr = 0.006(0.00857)(1,923,000) = 102.968$$

$$lb/MWh = 102.968/809 = 0.12$$

APPENDIX 7
FIGURES

CATALYST
AIR MANAGEMENT, INC.

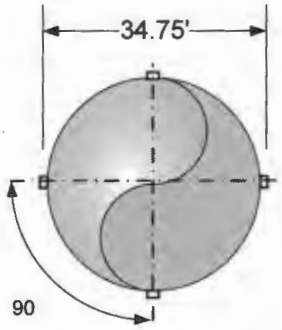

SECTION A - A

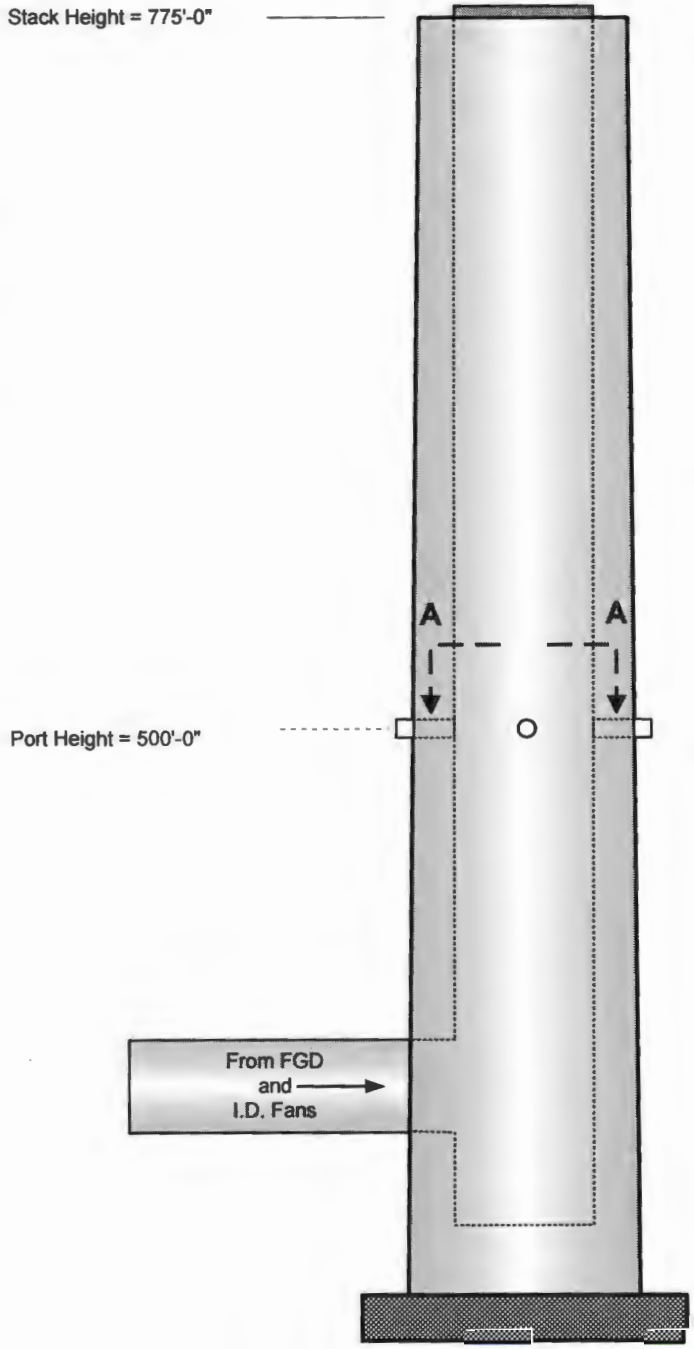

TRAVERSE POINTS (Typ 4 Ports)
FLOW (Inches) from inside of stack.

1. 18.35"
2. 60.88"
3. 123.43"

TITLE		
SALT RIVER PROJECT - NAVAJO GENERATING STATION		
DESCRIPTION		DATE
STACK TEST PORT CONFIGURATION		9/24/09
SCALE	DRAWN BY	REVISED
NONE	MJ TAYLOR	12/30/09

CATALYST
AIR MANAGEMENT, INC.

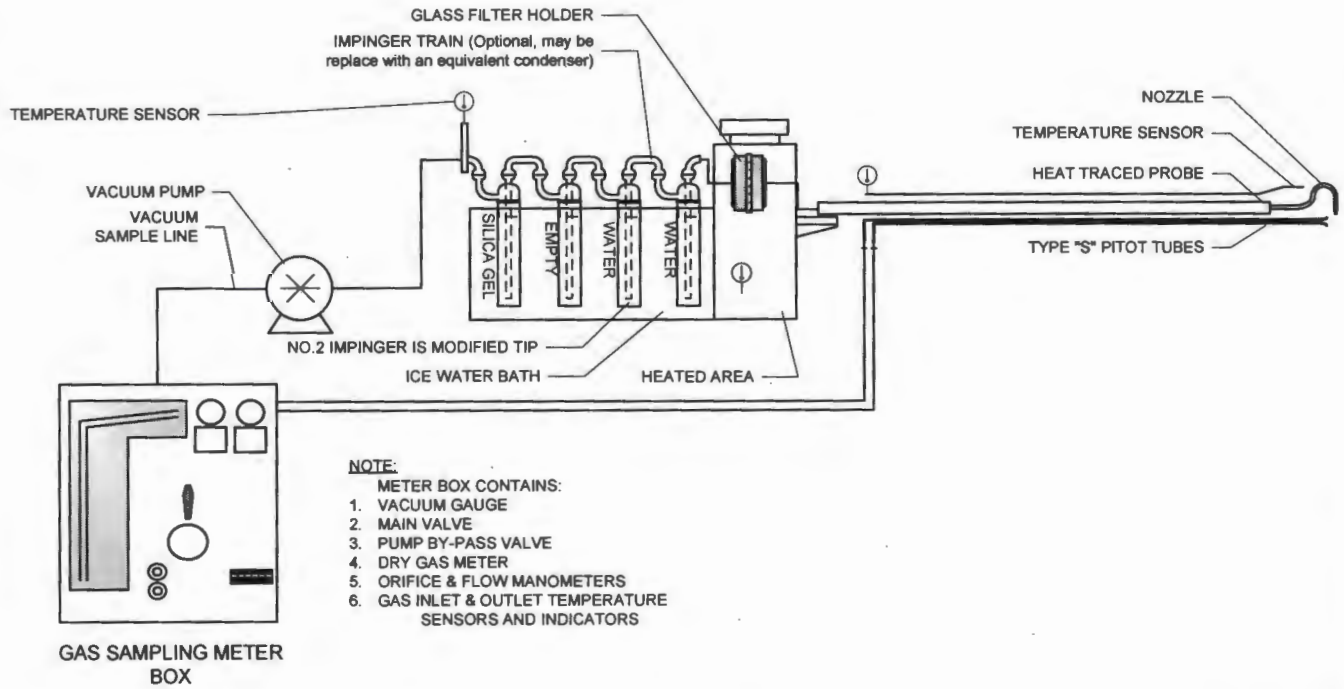

GAS SAMPLING METER BOX

NOTE:
METER BOX CONTAINS:
1. VACUUM GAUGE
2. MAIN VALVE
3. PUMP BY-PASS VALVE
4. DRY GAS METER
5. ORIFICE & FLOW MANOMETERS
6. GAS INLET & OUTLET TEMPERATURE SENSORS AND INDICATORS

TITLE		
EPA METHOD 5 SAMPLING TRAIN		
DESCRIPTION		DATE
PARTICULATE SAMPLE TRAIN		01-26-98
SCALE	DRAWN BY	REVISED
NONE	RF COBB	3/3/2010

CATALYST
AIR MANAGEMENT, INC.

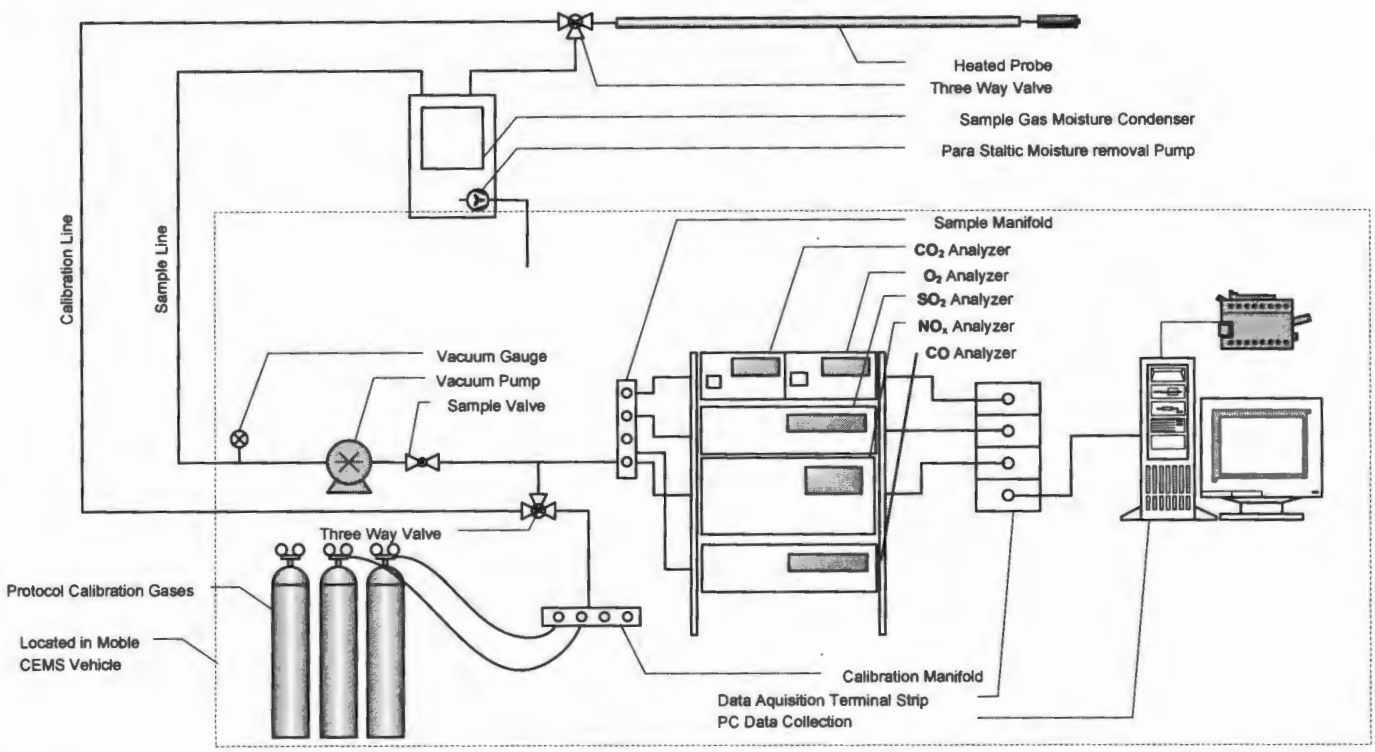

TITLE		
EPA INSTRUMENTAL SAMPLE TRAIN		
DESCRIPTION		DATE
SAMPLE TRAIN SCHEMATIC		01-26-98
SCALE	DRAWN BY	REVISED
NONE	RF COBB	