Borden Avenue Bridge
Draft Upland Site Summary

This Upland Site Summary was authored by New York City. The opinions, statements, and conclusions herein are solely those of New York City. They are not adopted by and should not be attributed to any other Person.

SITE NAME: **BORDEN AVENUE BRIDGE**

Address: Borden Avenue over Dutch Kills Creek, Queens
Tax Lot Parcel(s): Bridge Identification Number (BIN) 2-24041-0
Latitude: 40.739016
Longitude: -73.942666
Regulatory Programs/Numbers/Codes: NYSDEC Permit No. 2-6304-01440/00004; NYSDEC Spill Number 0903437
Analytical Data Status: ☐ Electronic Data Available ☒ Hardcopies only ☐ No Data Available

1 SUMMARY OF CONSTITUENTS OF POTENTIAL CONCERN (COPCS) TRANSPORT PATHWAYS TO THE CREEK

Overland Transport: Overland transport is limited to runoff from the bridge deck, abutments and operator house. Runoff could carry spilled materials and other material deposited onto the bridge deck or other surfaces from vehicular traffic to the creek. However, there are no known records of spills or discharges on the bridge from vehicular traffic into the Dutch Kills. There is insufficient evidence to make a pathway determination.

Bank Erosion: The west bank consists of the bridge abutment and rip rap placed on the shoreline. During the recent bridge construction, the entire west abutment was rebuilt. In addition, new rip rap was placed along the bank within the bridge right-of-way. No bank erosion is evident at this location. The east bank consists of stone bulkhead on wood cribbing and an area into which the bridge deck retracts when the bridge is opened for marine traffic. It appears that water from the Dutch Kills flows into and under this area as a result of tidal fluctuation. There is no evidence of bank erosion. There is insufficient evidence to make a pathway determination.

DRAFT

Groundwater: During the pre-construction sampling event of the west abutment reconstruction project, groundwater was sampled and analytical results detected no exceedances of NYCDEP and NYSDEC regulatory values. As explained below, the only contamination associated at this site is historical contamination of sediment and surface waters. Historically and currently, this pathway is not complete.

Overwater Activities: Historically and currently, this pathway is not complete.

Stormwater/Wastewater Systems: There are no storm water or waste water collection systems installed on site that discharge to the creek. Runoff could carry spilled materials and other material deposited onto the bridge deck or other surfaces from vehicular traffic to the creek.

Contamination of surface waster that seeped into a cofferdam was discovered during emergency reconstruction at the west abutment. This contaminated water appeared disconnected from the groundwater, which was separately tested and found to have no exceedances of regulatory values. During the remediation activities, a SPDES Permit Equivalent Application was issued as part of a Stipulation Agreement and Corrective Action Plan with NYSDEC. Wastewater from site remediation activities was pumped through a treatment system prior to discharge into the Dutch Kills. The treatment system consisted of a settling tank, oil/water separator, carbon filter and bag filter. This process was terminated upon completion of remediation activities and bridge construction. There is insufficient evidence to make a pathway determination.

Air Releases: There is insufficient evidence to make a pathway determination.

2 PROJECT STATUS

Activity		Date(s)/Comments
Phase 1 Environmental Site Assessment	☐	
Site Characterization	☒	Pre-construction subsurface soil and groundwater sampling performed on 2/3/2009. NYSDEC Permit No. 2-6304-01440/00004, dated 2/12/09, was issued for the

Activity		Date(s)/Comments
		construction activities.
Remedial Investigation	☒	Petroleum contamination was discovered during construction activities. Sediment and surface water samples were collected on 6/19/2009. NYSDEC was notified of the contamination on 6/23/2009. NYSDEC Spill number 0903437 was assigned to the spill.
Remedy Selection	☒	Meeting held with NYSDEC on 6/29/2009 to discuss remediation. Stipulation Agreement with Corrective Action Plan dated 9/3/09 was signed.
Remedial Design/Remedial Action Implementation	☒	12/10/2009
Use Restrictions (Environmental Easements or Institutional Controls)	☐	
Construction Completion	☐	
Site Closeout/No Further Action Determination	☒	Spill was closed on 03/03/2011

- NYSDEC Site Code(s): NYSDEC Permit No. 2-6304-01440/00004; NYSDEC Spill Number 0903437
- NYSDEC Site Mgr.: Mr. Raphael Ketani, MS, CPG (NYSDEC Spills Manager)

3 SITE OWNERSHIP HISTORY

- Respondent Member: ☒Yes ☐ No

Owner	Occupant	Type of Operation	Years
NYC	NYC	Bridge. Please note that a NYC-owned bridge has been on site since 1868. The current bridge has been in existence for approximately 104 years.	140

4 PROPERTY DESCRIPTION

The site is the Borden Avenue Bridge over Dutch Kills between 27th Street and Review Avenue in Long Island City, NY. The Borden Avenue Bridge is a retractable bridge providing a crossing for Borden Avenue over the Dutch Kills Creek. The site consists of

the bridge, operator house and the bridge abutments which are under the jurisdiction of the NYCDOT Division of Bridges.

5 CURRENT SITE USE

The site is currently the Borden Avenue Bridge over the Dutch Kills Creek. The site consists of the bridge, the abutments and the operator house. The east abutment consists of an open area into which the bridge retracts when open. This area consists of a stone and timber crib with soil infill. The west abutment consists of the newly constructed concrete and stone abutment pier. Bridge operation controls are located in the Operator House which is not regularly manned.

6 SITE USE HISTORY

The original Borden Avenue Bridge over Dutch Kills was a wooden bridge built as part of the general construction of Borden Avenue in 1868, connecting East Second Street in Long Island City with D Street in Blissville and to Greenpoint Avenue. In 1874, the wooden bridge was replaced by an 'Iron Swing Bridge' as part of a streets and avenues improvement program.

The Iron-Swing Bridge was removed in 1906 and construction began shortly on a new retractile bridge, a bridge with a superstructure designed to move horizontally either longitudinally or diagonally from "closed" to "open" position, the portion acting in cantilever being counterweighted by that supported on rollers. This new bridge opened on March 25th, 1908. The deck's original design consisted of creosote-treated wood blocks, with two trolley tracks in the roadway.

The Borden Avenue Bridge opens and closes through horizontal translation of the entire superstructure. Its trapezoidal shaped frame is mounted on nine wheeled trucks which roll on four pairs of crane rails.

7 CURRENT AND HISTORICAL AREAS OF CONCERN AND COPCs

The following sections provide brief discussion of the potential sources and COPCs at the site requiring additional discussion.

Uplands: There are limited transport mechanisms of COPCs from upland areas to the creek from the bridge, and no current or historical sources of COPCs on the Borden Avenue Bridge. However, during reconstruction of the west abutment, contamination from an historical oil spill was discovered at the west bank of the Dutch Kills Creek. Details regarding this spill are provided in the Spills section.

Overwater Activities: There are no current or historical overwater activities, besides limited bridge repair work. Such repair work carries little risk of contamination, since machine fuel tanks would represent the only introduced COPC. No such spills have ever been recorded at this site.

Spills: In March 2008, NYCDOT discovered that an existing crack in the bridge's west abutment wing wall had expanded, leading to a continued movement of the west abutment wall. NYCDOT began a weekly monitoring program which indicated the wall movement to be accelerating.

Soil and groundwater samples were collected in February 2009 as part of a pre-construction site survey at the west abutment. See Attachments 1 and 2. This sampling is discussed in further detail in 9.1 and 9.2, below. The purpose of the sampling was to characterize the material for disposal purposes.

In order to perform preliminary bridge inspection work, a cofferdam was installed around the west abutment and its wing walls. The cofferdam allowed for the dewatering within its confines to lower the water level through a series of permitted wells and facilitate sediment excavation. During the excavation within the cofferdam, contractor personnel detected odors. On June 19, 2009, an oil sheen and odor was observed in the dewatering settling tank. NYCDOT shut down the dewatering operation and the contractor placed oil spill booms around the area to prevent migration into the Dutch Kills. At an estimated depth from the top of the channel to 10 feet below grade, excavated

DRAFT

sediments began exhibiting the appearance and odor of petroleum. Two samples of the impacted sediment and two water samples (one within the settling tank and one at the outfall discharge) were collected on June 19, 2009. In addition, a water sample was collected from within the cofferdam excavation on June 19, 2009. See Attachment 3.

In summary, in terms of COPCs, the excavated sediment contained concentrations of metals, PAHs, and pesticides which exceeded NYSDEC guidelines. None of the sediment samples exceeded Toxic Characteristic Leaching Procedure (TCLP) parameters for characterizing the sediment for waste disposal purposes. Water samples collected contained concentrations of PAHs, PCBs, antimony, arsenic, cadmium, chromium, copper, lead, and nickel which exceeded NYSDEC standards and guidance values.

Based on the laboratory data, the presence of petroleum contaminated sediment was reported to the NYSDEC Spills Line on June 23, 2009. NYSDEC Spill number 0903437 was assigned. In addition, the National Response Center (NRC) was contacted on June 26, 2009 to report the sheen that was discovered. The NRC assigned Spill Number 909828. This contamination was detected during excavation and no spills were associated with the bridge repair work; thus, the spill was historic.

A meeting was held with NYSDEC on June 29, 2009 to discuss the remedial measures to be implemented in order to continue emergency bridge repair work at the site. As a result of the meeting a Corrective Action Plan was developed and a Stipulation Agreement between NYSDEC and NYCDOT was signed. In lieu of a complete State Pollutant Discharge Elimination System (SPDES) permit application, NYSDEC permitted the submittal of a SPDES Permit Equivalent Application. NYSDEC established surface water discharge standards based on the contamination present in the sediments and water.

All remediation activities were conducted in accordance with the NYSDEC approved Corrective Action Plan dated July 23, 2009 and amended August 19, 2009, and January 7, 2010. The water treatment system successfully treated the water generated through dewatering, which met the NYSDEC-required surface water discharge limits during all effluent sampling events. A total of 7,390.75 cubic yards of petroleum-contaminated excavated sediment was generated on site and transported to Clean Earth of Carteret for

disposal using non-hazardous material manifests for tracking purposes. A total of 12,152,173 gallons of water were treated and discharged to the Dutch Kills. As part of the Corrective Action Plan a 60-mil thick HDPE liner was installed at the bottom of the west abutment prior to the placement of concrete. This membrane was placed in order to prevent upward migration of petroleum-containing sediment once the cofferdam was removed.

The spill was closed by NYSDEC on March 3, 2011.

8 PHYSICAL SITE SETTING

- Geology
- Hydrogeology

No site specific geologic or hydrogeological information is available for the site. The following information is based on regional conditions in the Brooklyn/Queens area.

In general, the geologic setting of Newtown Creek area consists of Quaternary glacial deposits overlying Paleozoic gneiss and schist bedrock (Misut and Monti 1999). The contact between the glacial deposits and bedrock slopes rather steeply to the southeast, ranging in depth from less than 50 ft bgs near the mouth of Newtown Creek to over 200 ft bgs at the eastern portions of the historical data review area. The near surface geology is of most interest relative to potential groundwater transport pathways from upland sites to the creek. In most areas, a heterogeneous anthropogenic fill unit of variable thickness (generally less than 20 ft thick) immediately underlies the surface. Beneath the fill in most areas are complex upper glacial deposits of Late Pleistocene age consisting of ablation till, outwash, and glaciolacustrine sediments. In some areas near Newtown Creek, a shell-bearing gray silt unit is present beneath the fill; this silt may represent post-glacial intertidal sediments deposited in wetlands adjacent to the creek prior to filling in the 1800s. An extensive sequence of regionally significant glacial units underlies the upper glacial deposits in areas where bedrock is deeper (Misut and Monti 1999).

The surface aquifer is typically contained with the upper glacial deposits and the lower portion of the anthropogenic fill layer. Depth to groundwater varies from a few feet to

about 30 ft bgs in the historical data review area. Shallow groundwater generally flows towards and discharges to Newtown Creek (Misut and Monti 1999).

9 NATURE AND EXTENT *(CURRENT UNDERSTANDING OF ENVIRONMENTAL CONDITIONS)*

9.1 Soil

Soil Investigations ☒ Yes ☐ No
Bank Samples ☐ Yes ☒ No

Soil Summary:

Soil samples were collected in February 2009 as part of a pre-construction site survey at the West Abutment. Soil samples were collected by EPM, Inc. on February 3, 2009 from the western approach to the Borden Avenue Bridge at 27th Street, in Long Island City, NY. The scope of work included the collection of eight soil samples for laboratory analysis from areas proposed for excavation for the emergency reconstruction of the Borden Avenue Bridge. The purpose of the sampling was to characterize the material for disposal purposes. Eight soil samples taken on the sidewalk and street level were submitted for laboratory analysis by advancing five Geoprobe® soil borings to three feet below grade, and preparing one composite sample from the five discreet grab samples. Soils were also sampled from excavated stockpiles. Soils were field screened for visual/olfactory indications of contamination, and with a photoionization detector (PID), a device that measures volatile organic vapors. There was no obvious visual or odor evidence of petroleum contamination in any of the grab samples. The soils encountered contained evidence of historic fill material.

The complete laboratory data report and chain of custody record is provided in Attachment 1. The tables were not easily translatable to a table in this summary and are therefore not recreated here. A summary of the findings is below.

Each sample contained at least one analyte at concentrations exceeding their respective New York State threshold values. Sample G-1 contained the VOC benzene at a concentration of 18 parts per billion (ppb), which is slightly above the NYSDEC STARS value for benzene of 14 ppb. All of the soil samples taken contained various

DRAFT

Semi-Volatile Organic Compounds (SVOCs) above NYSDEC criteria with the exception of Sample G-1. However, only samples SP-1 and SP-2 contained SVOCs above NJDEP residential limits (disposal in NJ was contemplated, before discovery of the spill in June 2009). The metals mercury and zinc were detected in several of the samples above NYSDEC thresholds.

No PCBs, Pesticides or Herbicides were detected in any samples above any of the regulatory values, with the majority of results for these compounds at non-detectable levels. Paint filter results were non-detect for all samples. TPH concentrations were detected in all samples and ranged from 35.4 ppm to 693 ppm. Results for TCLP, Reactivity, Ignitability, and Corrosivity were all below RCRA Hazardous Waste thresholds, and in most cases non-detectable, indicating the material did not classify as a regulated hazardous waste based on these results. Laboratory analysis of the samples can be found in Attachment 1.

9.2 Groundwater

Groundwater Investigations ☒ Yes ☐ No

Groundwater sampling was conducted during the pre-construction sampling event by EPM, Inc. on February 3, 2009 at the West Abutment of the project site for the Emergency Construction of the Borden Avenue Bridge over Dutch Kills, in Long Island City, NY (Attachment 2). One groundwater sample was collected to assess general groundwater quality at the project site to identify possible handling and discharge options during construction dewatering. The groundwater results were compared to the NYCDEP Limitations for Effluent to Sanitary or Combined Sewers, May 2005, and to the New York State Department of Environmental Conservation (NYSDEC) Technical and Operational Guidance Series (TOGS 1.1.1) Ambient Water Quality Standards and Guidance Values for Class GA waters. One groundwater sample was collected from a permanent 2-inch diameter flush mount monitoring well. The well was measured on February 3, 2009 for depths to water and any free phase petroleum product. To determine whether free product was present, observation were made using a dual-phase interface probe prior to purging the well, after purging the well and allowing the water to return to static levels, and again after the collection of samples. No visible petroleum sheen or measurable free product was

observed in the well during the three separate measurements. The sample was analyzed by the laboratory for VOCs (by EPA Method 8260), SVOCs (8270), PCBs (608), and metals (200.7/245.1), Total Petroleum Hydrocarbons (1664), Flashpoint, Total Solids, Total Suspended Solids, Carbonaceous Biochemical Oxygen Demand, Total Nitrogen, Nitrites, Nitrates, Total Kjeldahl Nitrogen (TKN), and Chloride. Field measurements were collected for temperature and pH at the time of sampling with a Hanna Model HI991300 field meter. The analytical results are summarized in Table 1 through Table 6 in the report provided in Attachment 2. The laboratory results for the groundwater sample collected on February 3, 2009 did not indicate any exceedance of the regulatory values. Based on these results at the time groundwater beneath the project site appeared to meet NYCDEP Sewer Discharge requirements. This result was based on a single sample collected under non-pumping conditions.

NAPL Presence (Historical & Current) ☐ Yes ☒ No
Dissolved COPC Plumes ☐ Yes ☒ No

Groundwater Summary:

Groundwater contamination was not discovered during pre-construction groundwater sample collection and analysis. This pathway appears to be incomplete.

9.3 Surface Water

- Surface Water Investigation ☒ Yes ☐No

Three surface water samples—one within the settling tank, one at the outfall discharge, and one within the cofferdam excavation—were collected on June 19, 2009. Water samples collected contained concentrations of PAHs, PCBs, antimony, arsenic, cadmium, chromium, copper, lead, and nickel which exceeded NYSDEC standards and guidance values. See Attachment 3.

- General or Individual Stormwater Permit (Current or Past) ☐ Yes ☒ No
- Do other non-stormwater wastes discharge to the system? ☐ Yes ☒ No
- Stormwater Data ☐ Yes ☒ No
- Catch Basin Solids Data ☐ Yes ☒ No
- Wastewater Permit ☐ Yes ☒ No

DRAFT

During the remediation activities, which took place during the west abutment reconstruction, a SPDES Permit Equivalent Application was issued as part of a Stipulation Agreement and Corrective Action Plan with NYSDEC. Wastewater from site remediation activities was pumped through a treatment system prior to discharge into the Dutch Kills. The treatment system consisted of a settling tank, oil/water separator, carbon filter and bag filter. This process was terminated upon completion of remediation activities and bridge construction.

Permit Type	Permit Number	Start Date/Modified Dates	Outfalls	Frequency-Parameters
Tidal Wetland (Part 661)/ Water Quality Certification (6 NYCRR Part 608)/ ECL Article 15 Protection of Waters	2-6304-01440/00004; 2-6304-01440/00005; 2-6304-01440/00006	2/12/2009; 4/2/2009; 11/19/2009; 1/26/2010; 1-11-2011 (renewal)		
Long Island Well Permit	2-6304-01440/00008	5/21/2009; 1/1/2010	Temporary 12 inch outfall to Dutch Kills	Install and operate a temporary dewatering system to facilitate reconstruction of the west abutment and wingwalls of the Borden Avenue Bridge over the Dutch Kills in Queens with a maximum withdrawal of 864,000 gallons per day. Pumped groundwater is to be directed to a temporary 12 inch outfall into Dutch Kills.

- Wastewater Data ☐ Yes ☒ No

Surface Water Summary

During the bridge reconstruction project, water from the cofferdam was treated and discharged to the surface water in accordance with the NYSDEC approved Corrective Action Plan dated July 23, 2009 and amended August 19, 2009, and January 7, 2010. This discharge ended at the completion of the remediation project. The water treatment system successfully treated the water generated through dewatering, which met the

NYSDEC-required surface water discharge limits during all effluent sampling events. A total of 12,152,173 gallons of water were treated and discharged to the Dutch Kills.

9.4 Sediment

- Creek Sediment Data ☒ Yes ☐ No

Sediment samples were collected from the cofferdam with Dutch Kills on June 19, 2009 upon discovery of contamination from an historic spill during excavation within the cofferdam. The samples were analyzed for petroleum fingerprint, volatile organic compounds (VOCs), semi-volatile organic compounds (SVOCs), pesticides, herbicides, PCBs, and metals. Concentrations were compared to the NYSDEC Recommended Soil Cleanup Objectives (TAGM 4046) and the State's Brownfield Cleanup, Track 1 - Unrestricted Use: Generic Soil Cleanup Table (Track 1) pursuant to 6 NYCRR Part 375-6.8. The preliminary fingerprint identified a mix between a No. 6 fuel oil and motor fuel. Acetone, eight individual polyaromatic hydrocarbons (PAHs), the pesticides dieldrin and endrin, and nine metals exceeded both TAGM 4046 and Track 1 objectives in both samples. Heptachlor epoxide also exceeded the TAGM objective in one of the two samples. Diesel range organic (DRO) compounds were detected in the samples at 5,100 and 7,000 mg/kg, respectively. The gasoline range organic (GRO) petroleum fraction of the two samples was considerably lower at 28 and 50 mg/kg, respectively. The PCB levels exceed the NYSDEC Unrestricted Use Soil Cleanup Objectives [Part 375-6.8(a)] and Restricted Use Soil Cleanup Objectives [Part 375-6.8(b)]. None of the sediment samples exceeded Toxic Characteristic Leaching Procedure (TCLP) parameters for characterizing the sediment for waste disposal purposes. The laboratory analysis results can be found in Attachment 3. During the bridge reconstruction/remediation project, a total of 7,390.75 cubic yards of petroleum-contaminated excavated sediment was generated on site and transported to Clean Earth of Carteret for disposal using non-hazardous material manifests for tracking purposes. As part of the Corrective Action Plan a 60-mil thick HDPE liner was installed at the bottom of the west abutment prior to the placement of concrete. This membrane was placed in order to prevent upward migration of petroleum-containing sediment once the cofferdam was removed.

DRAFT

9.5 Air

- Air Permit ☐ Yes ☒ No
- Air Data ☐ Yes ☒ No

Information related to air emissions was not found in reviewed documents.

10 REMEDIATION HISTORY (INTERIM REMEDIAL MEASURES AND OTHER CLEANUPS)

Originally, the soil contamination discussed in Section 9.1 was to be addressed through excavation and disposal as contaminated, but non-hazardous, material. Then, during the emergency reconstruction of the Borden Avenue Bridge, sediment and surface water contamination was discovered within the cofferdam installed for the west abutment reconstruction. A meeting was held with NYSDEC on June 29, 2009 to discuss the remedial measures to be implemented in order to continue emergency bridge repair work at the site. As a result of the meeting a Corrective Action Plan was developed and a Stipulation Agreement between NYSDEC and NYCDOT was signed. In lieu of a complete State Pollutant Discharge Elimination System (SPDES) permit application, NYSDEC permitted the submittal of a SPDES Permit Equivalent Application. NYSDEC established surface water discharge standards based on the contamination present in the sediments and water. All remediation activities were conducted in accordance with the NYSDEC approved Corrective Action Plan dated July 23, 2009 and amended August 19, 2009, and January 7, 2010. The water treatment system successfully treated the water generated through dewatering, which met the NYSDEC-required surface water discharge limits during all effluent sampling events. A total of 7,390.75 cubic yards of petroleum-contaminated excavated sediment was generated on site and transported to Clean Earth of Carteret for disposal using non-hazardous material manifests for tracking purposes. A total of 12,152,173 gallons of water were treated and discharged to the Dutch Kills. As part of the Corrective Action Plan a 60-mil thick HDPE liner was installed at the bottom of the west abutment prior to the placement of concrete. This membrane was placed in order to prevent upward migration of petroleum-containing sediment once the cofferdam was removed.

DRAFT

A copy of these documents along with the Water Treatment Plan is provided in Attachment 4. A copy of the Spill Closeout Report, which details the remedial activities, is provided in Attachment 5. A copy of the NYSDEC permits is provided in Attachment 6.

11 BIBLIOGRAPHY / INFORMATION SOURCES

Environmental Planning and Management, *Groundwater Sample Results*, February 13, 2009.

Environmental Planning and Management, *Soil Sample Results*, February 12, 2009.

Misut, P.E., and Monti, J. Jr. 1999. Simulation of Ground-Water Flow and Pumpage in Kings and Queens Counties, Long Island, New York. U.S. Geological Survey, Water-Resources Investigations Report 98-4071.

NYCDOT and STV, 2009. Corrective Action Plan, Borden Avenue Bridge over Dutch Kills, July 23, 2009.

NYSDEC, signed September 15, 2009. Stipulation Pursuant to Section 17-0303 of the Environmental Conservation Law and Section 176 of the Navigation Law By: New York City Department of Transportation, NYSDEC Spill No. 0903437.

NYSDEC, 2009. NYSDEC Permit No. 2-6304-01440/0004, Borden Avenue Bridge over Dutch Kills.

NYSDEC, 2009. NYSDEC Permit No. 2-6304-01440/0004, Notice of Permit Modification, Borden Avenue Bridge over Dutch Kills, April 2, 2009.

NYSDEC, 2009. Correspondence to NYCDOT Division of Bridges, May 22, 2009.

NYSDEC, 2009. NYSDEC Notice of Incomplete Application, Long Island Well Permit, Borden Avenue Bridge, October 13, 2009.

NYSDEC, 2009. NYSDEC Permit No. 2-6304-01440/0004, Notice of Permit Modification, Borden Avenue Bridge over Dutch Kills, November 19, 2009

DRAFT

NYSDEC, 2010. NYSDEC Notice of Permit Modification, Borden Avenue Bridge over Dutch Kills, January 26, 2010.

NYSDEC, 2010. NYSDEC Notice of Permit Modification and Renewal, Long Island Well Permit, Borden Avenue Bridge over Dutch Kills, February 23, 2010.

NYSDEC, 2011. NYSDEC Notice of Permit Renewal, Borden Avenue Bridge over Dutch Kills, January 11, 2011.

STV Inc., 2009. Correspondence to NYSDEC, *Permit Modification Request*, Borden Avenue Bridge over Dutch Kills, September 8, 2009.

STV Inc., 2009. Correspondence to NYSDEC, *Discharge Monitoring Plan*, Borden Avenue Bridge over Dutch Kills, December 7, 2009

STV Inc., 2009. Correspondence to NYSDEC, Commencement of Dewatering Operations, Borden Avenue Bridge over Dutch Kills, December 11, 2009.

STV Inc., 2010. Correspondence to NYSDEC, Corrective Action Plan Addendum Request, Borden Avenue Bridge over Dutch Kills, January 7, 2010.

STV Inc., 2010. Correspondence to NYSDEC, Permit Modification Request, Borden Avenue Bridge over Dutch Kills, January 11, 2010.

STV Inc., 2010. Correspondence to NYSDEC, Treatment System Demobilization, Borden Avenue Bridge over Dutch Creek, July 12, 2010.

STV Inc., 2011. Spill Closure Report, , March 1, 2011.

12 ATTACHMENTS

Figure 1 -- Aerial photograph of Borden Avenue Bridge site

Attachment 1 – Soil Sample Results, February 12, 2009

Attachment 2 – Groundwater Sample Results, February 12, 2009

Attachment 3 – Sediment and Water Sample Results, June 19, 2009

Attachment 4 – Stipulation Agreement and Treatment Plans

Attachment 5 – Spill Closure Report

Attachment 6 – NYSDEC Permits and Correspondence

DRAFT

Table 1

Potential Areas of Concern and Transport Pathways Assessment – Borden Avenue Bridge

Potential Areas of Concern	Media Impacted					COPCs														Potential Historic and Current Complete Pathway					
						TPH			VOCs																	
Description of Areas of Concern	Surface Soil	Subsurface Soil	Groundwater	Catch Basin Solids	River Sediment	Gasoline-Range	Diesel – Range	Heavier – Range	Petroleum Related (e.g., BETEX)	VOCs	Chlorinated VOCs	SVOCs	PAHs	Phthalates	Phenolics	Metals	PCBs	Herbicides and Pesticides	Dioxins/Furans	Overland Transport	Groundwater	Direct Discharge – Overwater	Direct Discharge – Storm/Wastewater	Discharge to Sewer/CSO	Bank Erosion
Subsurface area surrounding reconstructed west abutment/ west abutment	?	✓	--	--	✓	✓	✓	?	✓	✓	?	✓	✓	?	✓	✓	✓	✓	?	?	--	?	?	--	--

Notes:
√ - COPCs are/were present in Areas of Concern having a current or historical pathway that is determined to be complete or potentially complete
? - There is not enough information to determine if COPC is/was present in Area of Concern or if pathway is complete
-- - Current or historical pathway has been investigated and shown to be not present or incomplete

COPCs – Constituents of Potential Concern
BTEX - Benzene, toluene, ethylbenzene, and xylenes
PAHs - Polycyclic aromatic hydrocarbons
SVOCs - Semi-volatile Organic Compounds
TPH - Total Petroleum Hydrocarbons
VOCs - Volatile Organic Compounds

DRAFT

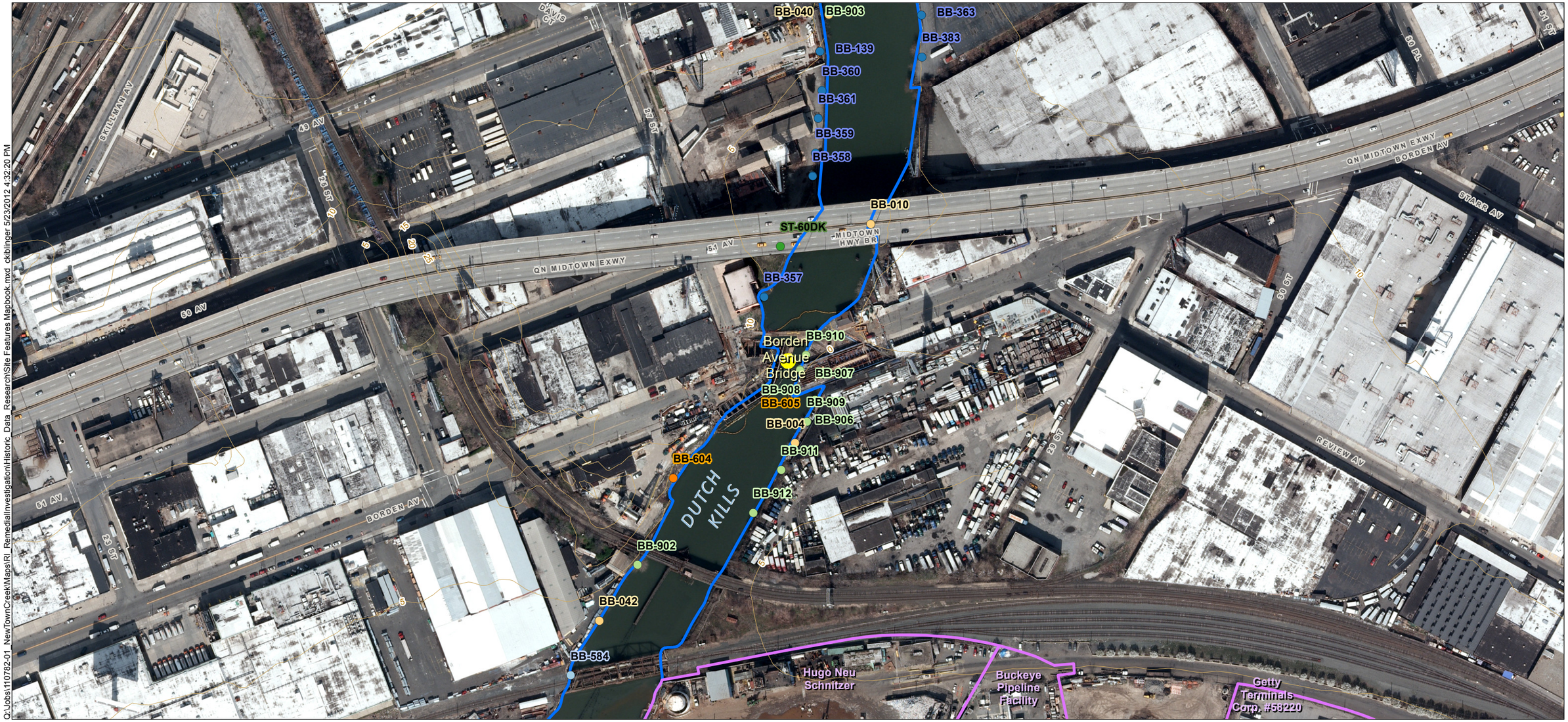

Q:\Jobs\110782-01_NewTownCreek\Maps\RI_RemedialInvestigation\Historic_Data_Research\Site Features Mapbook.mxd ckiblinger 5/23/2012 4:32:20 PM

- USEPA Sample Locations (Surface and Subsurface)
- Shoreline (NYC Dept. of Information Technology, 2006)
- USGS Nat'l Elev. Dataset 5-foot Contours
- Selected Site Property Boundary
- Neighboring Site Property Boundary

Outfall Class

- Direct Discharge
- General
- Highway Drain
- Major Stormwater Outfall
- SPDES
- Storm Drain

NOTES:

1. Outfall Labeling: BB: Bowery Bay; NC(B/Q): Newtown Creek, Brooklyn/Queens; ST: Stormwater.
2. Outfall locations are preliminary, compiled, estimated data based on New York City Department of Environmental Protection (NYCDEP) maps and tabulated data and other resources. Many outfall locations were taken from the New York City Shoreline Survey Program: Newtown Creek Water Pollution Control Plant Drainage Area, NYCDEP, March 31, 2003. Other locations were taken from an excerpt from a similar report from 2008 (the complete report was not included in files available for review). Finally, some outfall locations were inherited from previous Anchor QEA and Newtown Creek Project work. Latitudinal and longitudinal data provided in the 2003 and 2008 NYCDEP reports were rounded to the nearest second. This resulted in potential outfall location discrepancies of up to approximately 200 feet. All outfall locations are currently under field verification.
3. Aerial Photos: New York State Division of Homeland Security and Emergency Services, 2010.
4. Site Boundaries are based on New York City parcels data.
5. Coarse topographic contours are derived from U.S. Geological Survey 10-meter data.

Feet

0 100 200 300 400

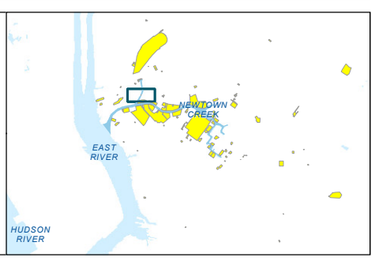

ANCHOR QEA

DRAFT

Figure 1

Site Vicinty Map

Draft Upland Site Summary: Borden Avenue Bridge

Newtown Creek RI/FS

PLANNING &
MANAGEMENT, INC.

February 12, 2009

Harry M. Palmer, P.E.
HAKS Engineering
NYCDOT Field Office
23-23 Borden Ave
Long Island City, NY 11101

RE: Soil Sample Results
Borden Avenue Bridge Emergency Repair
Long Island City, NY
NYCDOT Contract No. HBQ1162E

Dear Mr. Palmer:

This letter contains the results for soil samples collected by EPM, Inc. on February 3, 2009 from the western approach to the Borden Avenue Bridge at 27th Street, in Long Island City, NY (Figure 1. Project Site Location). The scope of work included the collection of eight soil samples for laboratory analysis from areas proposed for excavation for the emergency reconstruction of the Borden Avenue Bridge. The purpose of the sampling was to characterize the material for disposal purposes. The proposed horizontal limits of excavation for the project are shown on Figure 2 as Grid 1 through Grid 4. Excavation of Grids 1 and 2 is proposed to approximately 3 feet below grade, and excavation within Grids 3 and 4 is proposed to approximately 11 feet below grade. These dimensions correspond to approximately 4,000 cubic yards of soil.

SAMPLING METHODS

Eight soil samples were submitted for laboratory analysis, identified as samples G-1, G-2, and SP-1 through SP-6 on Figure 2. Soils proposed for removal within Grid 1 and Grid 2 were sampled in-situ by advancing five Geoprobe® soil borings within each grid to 3 feet below grade, and preparing one composite sample for each Grid from the five discreet grab samples. The soils from Grid 3 and Grid 4 were sampled from excavated stockpiles. Three composite samples were collected from the soil excavated from Grid 3 (samples SP-1, SP-2, SP-3); and three composite samples were collected from the soil excavated from Grid 4 (SP-4, SP-5, SP-6). Each of the soil pile samples submitted to the laboratory were comprised of 5 discreet grab samples.

Soils were field screened for visual / olfactory indications of contamination, and with a photoionization detector (PID), a device that measures volatile organic vapors. There was no obvious visual or odor evidence of petroleum contamination in any of the grab samples. The soils encountered contained evidence of historic fill material in the form of coal and masonry fragments, and apparent incinerator debris. The composite samples were prepared by placing the grab samples in a stainless steel mixing bowl, homogenizing the sample, separating it into quarters, and placing roughly equal portions of each quarter into the laboratory supplied containers. To avoid volatilization, the samples submitted for volatile organic compound (VOC) analysis were not composited, but rather were collected as grab samples.

1983 Marcus Avenue, Suite 109
Lake Success, New York 11042
Phone: 516-328-1194 / Fax: 516-328-1381

The eight soil samples were placed in laboratory provided glassware and immediately placed in a cooler on ice and delivered under proper chain-of-custody to New York and New Jersey Certified Laboratory Chemtech, Inc. of Mountainside, NJ. The soil samples were analyzed by the laboratory for the following parameters:

- TCL Volatile Organic Compounds with MTBE (VOCs, EPA 8260);
- TCL Semi-VOCs (EPA 8270);
- PCBs (EPA 8082);
- PPL Metals (EPA 6010/200.7);
- PPL Pesticides (EPA 8081);
- TCLP Metals, VOCs, SVOCs, Pesticides, and Herbicides (EPA 1311);
- Total Petroleum Hydrocarbons (EPA 9017);
- Paint Filter (EPA 9095); and,
- Ignitability, reactivity and corrosivity

The analytical results are compared in Table 1 and Table 2 in Attachment 1 to the New York State Department of Environmental Conservation (NYSDEC) Technical and Administrative Guidance Memorandum (TAGM) No. 4046 Recommended Soil Cleanup Objectives (RSCOs); to NYSDEC Spill Technology and Remediation Series (STARS) Memo #1–Petroleum-Contaminated Soil Guidance Policy, August 1992; to the New Jersey Department of Environmental Protection (NJDEP) Residential Soil Criteria, NJAC 7:26D, May 1999; and, to the Federal Resource Conservation and Recovery Act (RCRA) Hazardous Waste Regulatory Limits (CFR §261).

RESULTS

The compounds detected in the samples are summarized in Table 1 and Table 2. The complete laboratory data report and chain of custody record is also provided in Attachment 1. Each sample contained at least one analyte at concentrations exceeding their respective New York or New Jersey threshold values. Sample G-1 contained the VOC benzene at a concentration of 18 parts per billion (ppb), which is above the NYSDEC STARS value for benzene of 14 ppb. All of the soil samples taken contained various Semi-Volatile Organic Compounds (SVOCs) above NYSDEC criteria with the exception of Sample G-1. However, only samples SP-1 and SP-2 contained SVOCs above NJDEP residential limits. The metals mercury and zinc were detected in several of the samples above NYSDEC thresholds, but in all cases, below NJ thresholds.

No PCBs, Pesticides or Herbicides were detected in any samples above any of the regulatory values, with the majority of results for these compounds at non-detectable levels. Paint Filter results were non-detect for all samples. TPH concentrations were detected in all samples and ranged from 35.4 ppm in Sample SP-3 to 693 ppm in Sample G-1. Results for TCLP, Reactivity, Ignitability, and Corrosivity were all well below RCRA Hazardous Waste thresholds (Table 2), and in most cases non-detectable, indicating the material does not classify as a regulated hazardous waste based on these results.

CONCLUSIONS

These results should be provided to your chosen disposal or recycling facility to determine if the material meets their acceptance criteria. Based on these results, project soils would likely classify as contaminated but non-hazardous waste. Based on the observed fill material, the contaminants detected are more likely associated with the historic fill rather than any onsite discharges of hazardous materials. Regardless of the analytical results, the presence of coal fragments and incinerator debris could prohibit disposal of the material as construction and demolition debris.

Please feel free to contact the undersigned at 516-328-1194 should you have any questions.

Very truly yours,

Richard R. Hart
Environmental Planning &
Management, Inc.

Figures: Figure 1. Project Site Location
Figure 2. Sample Location Plan

Attachment 1: Data Summary Tables
Analytical Laboratory Report and Chain-of-Custody Form

FIGURES

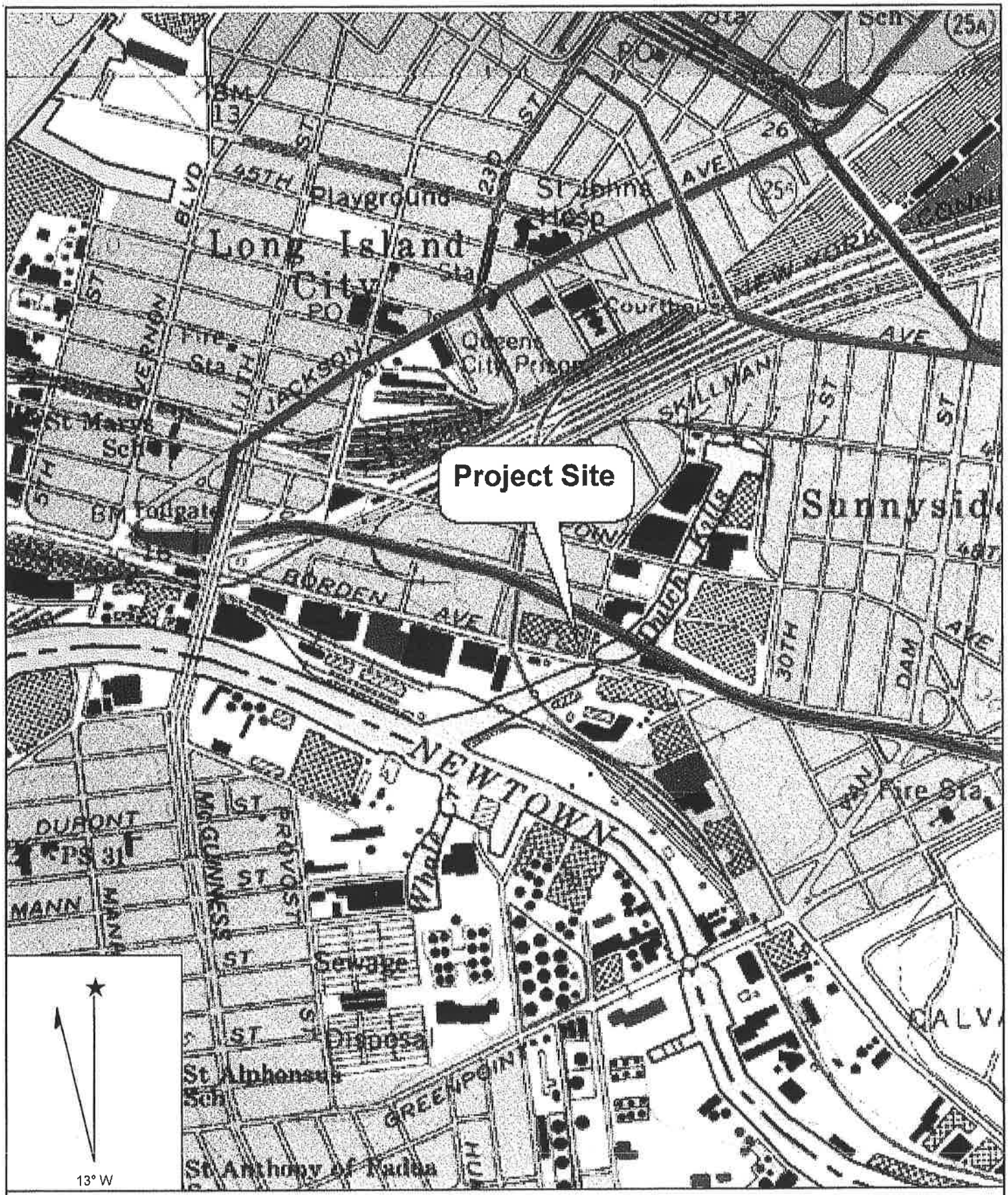

Name: BROOKLYN
Date: 2/11/2009
Scale: 1 inch equals 800 feet

Location: 040° 44' 24.68" N 073° 56' 43.62" W
Caption: Figure 1. Project Site Location
Borden Ave at 27th Street
Long Island City, NY

Copyright (C) 2001, Maptech, Inc.

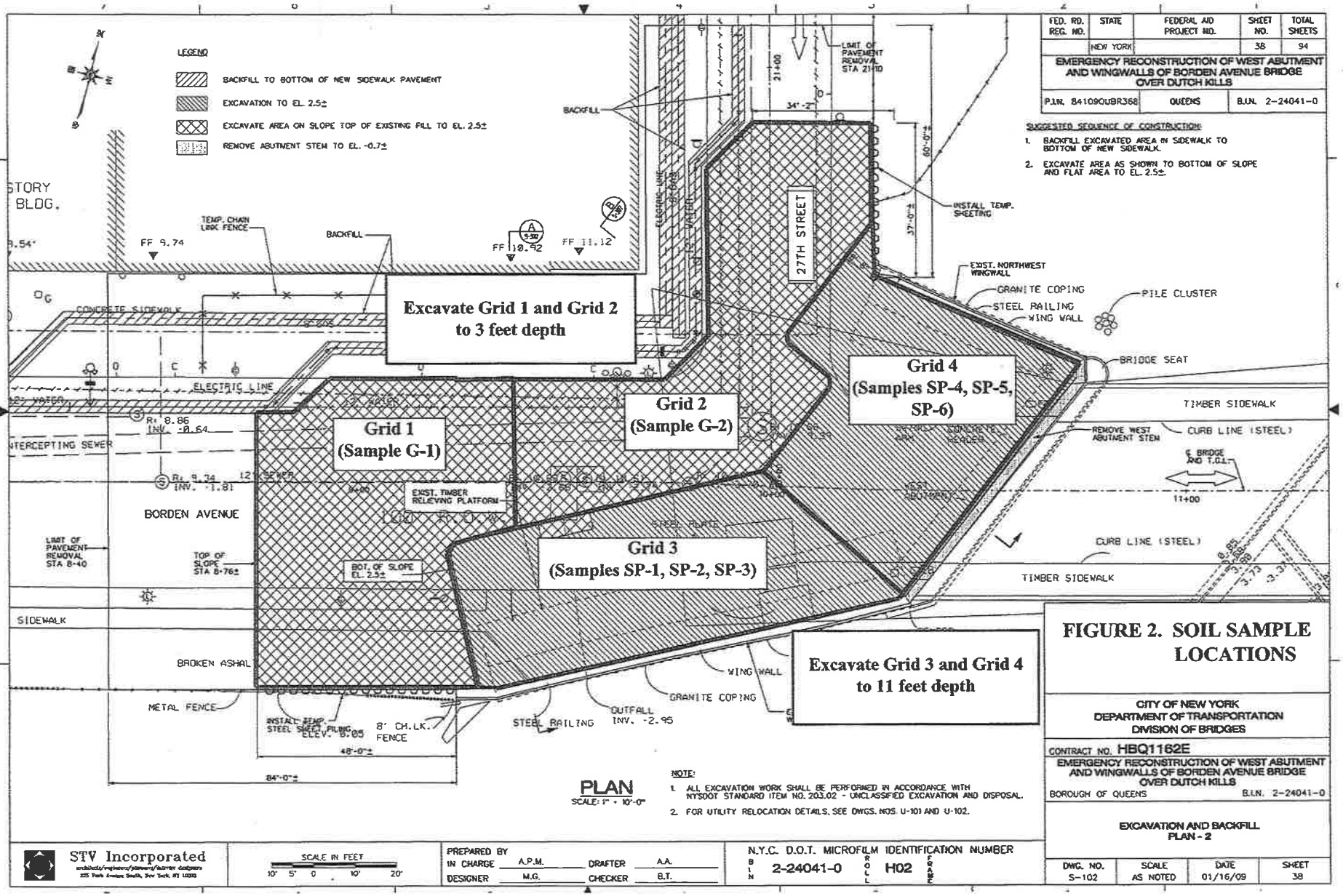

FED. RD. REG. NO.	STATE	FEDERAL AID PROJECT NO.	SHEET NO.	TOTAL SHEETS
	NEW YORK		38	94

EMERGENCY RECONSTRUCTION OF WEST ABUTMENT AND WINGWALLS OF BORDEN AVENUE BRIDGE OVER DUTCH KILLS

P.I.N. 841090UBR368 | QUEENS | B.I.N. 2-24041-0

SUGGESTED SEQUENCE OF CONSTRUCTION:

1. BACKFILL EXCAVATED AREA IN SIDEWALK TO BOTTOM OF NEW SIDEWALK.
2. EXCAVATE AREA AS SHOWN TO BOTTOM OF SLOPE AND FLAT AREA TO EL. 2.5±.

FIGURE 2. SOIL SAMPLE LOCATIONS

CITY OF NEW YORK
DEPARTMENT OF TRANSPORTATION
DIVISION OF BRIDGES

CONTRACT NO. HBQ1162E

EMERGENCY RECONSTRUCTION OF WEST ABUTMENT AND WINGWALLS OF BORDEN AVENUE BRIDGE OVER DUTCH KILLS

BOROUGH OF QUEENS | B.I.N. 2-24041-0

EXCAVATION AND BACKFILL PLAN - 2

DWG. NO.	SCALE	DATE	SHEET
S-102	AS NOTED	01/16/09	38

STV Incorporated

SCALE IN FEET: 10' 5' 0 10' 20'

PREPARED BY
IN CHARGE A.P.M. DRAFTER A.A.
DESIGNER M.G. CHECKER B.T.

N.Y.C. D.O.T. MICROFILM IDENTIFICATION NUMBER
BIN 2-24041-0 ROLL H02 FRAME

ATTACHMENT 1

Data Summary Tables

Laboratory Report and Chain-of-Custody Record

TABLE 1
Summary of Compounds Detected in Soil Samples Collected on 2/3/09
Borden Avenue Bridge Project
Long Island City, NY

Sample Location:	SP-1	SP-2	SP-3	SP-4	SP-5	SP-6	G-1	G-2	NYSDEC Reference Values		New Jersey Residential Soil Criteria [c]
Lab Identification:	A-1357-01	A-1357-02	A-1357-03	A-1357-04	A-1357-05	A-1357-06	A-1357-07	A-1357-08	STARS[A]	RSCO[B]	
VOCs	Results (ug/kg)										
Methylene Chloride	ND	21 J	15 J	20 J	ND	ND	ND	ND	NA	100	49,000
Benzene	ND	ND	ND	ND	ND	ND	**18 J**	7.1 J	14	60	3,000
SVOCs	Results (ug/kg)										
Acenaphthene	ND	210 J	ND	ND	ND	47 J	ND	ND	NA	41,000	NA
Naphthalene	ND	190 J	ND	ND	ND	ND	ND	ND	200	13,000	230,000
Dibenzofuran	ND	210 J	ND	ND	ND	ND	ND	ND	NA	6,200	NA
Fluorene	ND	210 J	ND	ND	ND	ND	ND	ND	1,000	50,000	2,300,000
Phenanthrene	**2,100**	**2,200**	160 J	130 J	170 J	330 J	ND	410 J	1,000	50,000	NA
Anthracene	410 J	410 J	ND	ND	40 J	88 J	ND	ND	1,000	50,000	10,000,000
Fluoranthene	3,100	2,100	290 J	370	350 J	400	ND	850 J	1,000	50,000	2,300,000
Pyrene	**2,400**	**1,500 J**	240 J	280 J	310 J	300 J	ND	700 J	1,000	50,000	1,700,000
Benzo(a)anthracene	**1,200 J**	**770 J**	**160 J**	**200 J**	**170 J**	**170 J**	ND	**530 J**	0.04	224	900
Chrysene	**1,300 J**	**830 J**	**170 J**	**200 J**	**170 J**	**170 J**	ND	**470 J**	0.04	400	9,000
bis(2-ethylhexyl)phthalate	ND	ND	ND	ND	ND	ND	ND	520 J	NA	50,000	49,000
Indeno(1,2,3-cd)pyrene	610 J	280 J	55 J	77 J	62 J	62 J	ND	280 J	NA	3,200	900
Benzo(b)fluoranthene	**1,500 J**	670 J	190 J	290 J	250 J	240 J	ND	880 J	NA	1,100	900
Benzo(k)fluoranthene	570 J	380 J	75 J	94 J	86 J	84 J	ND	310 J	NA	1,100	900
Benzo(a)pyrene	**1,200 J**	**710 J**	**130 J**	**190 J**	**170 J**	**150 J**	ND	690 J	NA	61	660
Benzo(g,h,i)perylene	650 J	340 J	69 J	97 J	91 J	91 J	ND	470 J	NA	50,000	NA
METALS	Results (mg/kg)										
Arsenic	2.96	4.88	4.22	2.65	2.27	1.76	2.74	3.75	NA	12*	20
Beryllium	0.369	0.347	0.366	0.352	0.283	0.296	0.394	0.34	NA	1.75*	2
Cadmium	0.286	0.237	0.476	0.241	0.183 J	0.179 J	0.222	0.327	NA	1*	39
Chromium	10.0	11.4	13.4	11.4	13.4	9.58	12.4	12.2	NA	40*	240
Copper	22.4	37.1	30.3	26	26	25.1	30.5	50.3	NA	50*	600
Lead	54.9	58.1	88.5	45.1	51.9	48.9	99.7	95.4	NA	500*	400
Mercury	**0.297**	**0.217**	**0.216 J**	0.177 J	**0.224 J**	0.096 J	0.102 J	**0.205 J**	NA	0.2*	14
Nickel	15.9	22.9	20.9	18	27.9	10.9	11.3	12.0	NA	25*	250
Silver	ND	ND	ND	ND	ND	ND	ND	ND	NA	NA	110
Zinc	42.4	47.5	**59.3**	43.1	**93.3**	36.7	**50.9**	**58.9**	NA	50*	1,500
Miscellaneous	Results										
Paint Filter (ml/100g)	ND	ND	ND	ND	ND	ND	ND	ND	NA	NA	NA
TPH (mg/kg)	71.8	83.8	35.4	167	149	133	693	78.3	NA	NA	NA

Notes:

Bold Values Exceed One or More Regulatory Limit.

(A) = NYSDEC STARS Memo #1 - Petroleum Contaminated Soil Guidance Policy, TCLP Alt. Guidance Values.

(B) = NYSDEC TAGM 4046, Recommended Soil Cleanup Objectives (RSCOs), 1994, amended December 2000.

(C) = NJAC 7:26D, May 1999

* = Site Background, Typical Eastern USA / NYState Background Levels (used by NYSDEC as a RSCO for this compound).

ug/kg = micrograms per kilogram or parts per billion (ppb). mg/kg = milligrams per kilogram or parts per million (ppm)

ND = Not Detected above Laboratory Method Detection Limit

NA = Not Applicable (no guidance value available).

D = Original analysis exceeds calibration range, dilution performed at laboratory.

J = Estimated value due to compound being detected below the instrument lower calibration range.

TABLE 2
RCRA Hazardous Waste Analysis
Soil Samples Collected 2/3/09
Borden Avenue Bridge Project
Long Island City, NY

Sample ID:	SP-1	SP-2	SP-3	SP-4	SP-5	SP-6	G-1	G-2	RCRA Hazardous Waste Level
Lab Identification:	A1357-10	A-1357-11	A-1357-12	A-1357-13	A-1357-14	A-1357-15	A-1357-16	A-1357-17	
TCLP VOC	RESULTS (parts per billion - µg/l)								
Vinyl Chloride	ND	ND	ND	ND	ND	ND	ND	ND	200
1,1-Dichloroethene	ND	ND	ND	ND	ND	ND	ND	ND	700
2- Butanone (MEK)	ND	ND	ND	ND	ND	ND	ND	ND	200,000
Chloroform	ND	ND	ND	ND	ND	ND	ND	ND	6,000
Carbon Tetrachloride	ND	ND	ND	ND	ND	ND	ND	ND	500
Benzene	ND	ND	ND	ND	ND	ND	ND	ND	500
1,2- Dichloroethane	ND	ND	ND	ND	ND	ND	ND	ND	500
Trichloroethylene	ND	88	ND	ND	ND	ND	150	ND	500
Tetrachloroethene	ND	72	ND	ND	ND	ND	100	ND	700
Chlorobenzene	ND	ND	ND	ND	ND	ND	ND	ND	100,000
TCLP SVOC	RESULTS (parts per billion - µg/l)								
Pyridine	ND	ND	ND	ND	ND	ND	ND	ND	5,000
1,4 Dichlorobenzene	ND	ND	ND	ND	ND	ND	ND	ND	7,500
2-Methylphenol	ND	ND	ND	ND	ND	ND	ND	ND	200,000
Hexachloroethane	ND	ND	ND	ND	ND	ND	ND	ND	3,000
3&4-Methyl Phenol	ND	ND	ND	ND	ND	ND	ND	ND	200,000
Nitrobenzene	ND	ND	ND	ND	ND	ND	ND	ND	2,000
Hexachlorobutadiene	ND	ND	ND	ND	ND	ND	ND	ND	500
2,4,6 -Trichlorophenol	ND	ND	ND	ND	ND	ND	ND	ND	2,000
2,4,5 -Trichlorophenol	ND	ND	ND	ND	ND	ND	ND	ND	400,000
2,4-Dinitrotoluene	ND	ND	ND	ND	ND	ND	ND	ND	130
Hexachlorobenzene	ND	ND	ND	ND	ND	ND	ND	ND	130
Pentachlorophenol	ND	ND	ND	ND	ND	ND	ND	ND	100,000
TCLP METALS	RESULTS (parts per billion - µg/l)								
Arsenic	ND	ND	ND	ND	ND	ND	ND	ND	5,000
Barium	507	502	446 J	431 J	338 J	256 J	300 J	509	100,000
Cadmium	ND	ND	ND	ND	ND	ND	ND	ND	1,000
Chromium	ND	ND	ND	ND	ND	ND	ND	ND	5,000
Lead	46.8 J	ND	ND	49.6 J	ND	ND	ND	55.1 J	5,000
Mercury	ND	ND	ND	ND	ND	ND	ND	ND	200
Silver	ND	ND	ND	ND	ND	ND	ND	ND	5,000
Selenium	ND	ND	ND	ND	ND	ND	ND	ND	1,000
TCLP HERBICIDE & PESTICIDE	RESULTS (parts per billion - µg/l)								
2,4-D	ND	ND	ND	ND	ND	ND	ND	ND	10,000
2,4,4-TP (Silvex)	ND	ND	ND	ND	ND	ND	ND	ND	1,000
gamma-BHC	ND	ND	ND	ND	ND	ND	ND	ND	40
Heptachlor	ND	ND	ND	ND	ND	ND	ND	ND	8
Heptachlor Epoxide	ND	ND	ND	ND	ND	ND	1.1	ND	8
Endrin	ND	ND	ND	ND	ND	ND	ND	ND	200
Methoxychlor	4.4	19 D	0.58	1.3	4.7	0.72	1.4	0.89	10,000
Toxaphene	ND	ND	ND	ND	ND	ND	ND	ND	500
Chlordane	ND	ND	ND	ND	ND	ND	ND	ND	30
PHYSICAL CHACTERISTICS	RESULTS (units as noted)								
Ignitability (° F)	ND	ND	ND	ND	ND	ND	ND	ND	140
Corrosivity (pH units)	8.6	8.9	8.9	8.7	8.6	9.2	10.1	9.5	<2.0 or >12.5
Reactivity to Cyanide (mg/l)	ND	ND	ND	ND	ND	ND	ND	ND	MDL
Reactivity to Sulfide (mg/l)	ND	ND	ND	ND	ND	ND	ND	ND	MDL

Notes:
ND = Not Detected above Laboratory Method Detection Limit
MDL = Method Detection Limit
D = Original analysis exceeds calibration range, dilution performed at laboratory.
RCRA Hazardous Waste Levels as referenced in CFR 40 § 261

CHEMTECH
CHAIN OF CUSTODY RECORD

284 Sheffield Street, Mountainside, NJ 07092
(908) 789-8900 Fax (908) 789-8922
www.chemtech.net

CHEMTECH PROJECT NO.
QUOTE NO. A1357
COC Number 078029

CLIENT INFORMATION

REPORT TO BE SENT TO:
COMPANY: EPM, Inc.
ADDRESS: 1983 Marcus Ave
CITY: Lake Success STATE: NY ZIP: 11042
ATTENTION: Rich Hart
PHONE: 516-328-1194 FAX: 516-328-1381

CLIENT PROJECT INFORMATION

PROJECT NAME: Borden Ave
PROJECT NO. 29007 LOCATION: LIC
PROJECT MANAGER: Richard Hart
e-mail: rhart@epmco.com
PHONE: SAME FAX: SAME

CLIENT BILLING INFORMATION

BILL TO: EPM PO#: 29007
ADDRESS: SAME
CITY: STATE: ZIP:
ATTENTION: R. Hart PHONE:

DATA TURNAROUND INFORMATION

FAX: 5 DAYS *
HARD COPY: DAYS *
EDD: 5 DAYS *
PREAPPROVED TAT: ☒ YES ☐ NO
STANDARD TURNAROUND TIME IS 10 BUSINESS DAYS

DATA DELIVERABLE INFORMATION

☒ RESULTS ONLY ☐ USEPA CLP
☐ RESULTS + QC ☐ New York State ASP "B"
☐ New Jersey REDUCED ☐ New York State ASP "A"
☐ New Jersey CLP ☐ Other
☐ EDD FORMAT

ANALYSIS

1 VOC 8260 TCL
2 TCL SVOC +20
3 Paint Filter
4 PCB / TPH
5 PP Pesticides
6 PP Metals
7 RCRA Characteristics
8 Full TCLP
9

CHEMTECH SAMPLE ID	PROJECT SAMPLE IDENTIFICATION	SAMPLE MATRIX	SAMPLE TYPE COMP	SAMPLE TYPE GRAB	SAMPLE COLLECTION DATE	SAMPLE COLLECTION TIME	# OF BOTTLES	PRESERVATIVES 1	2	3	4	5	6	7	8	9	COMMENTS
1. 10, 1	SP-1	S	X		2-3-09	0800	4	X	X	X	X	X	X	X	X	X	Run TCLP on
2. 11, 2	SP-2					0815	4										Pests/Herbs
3. 12, 3	SP-3					0830	4										VOCs
4. 13, 4	SP-4					0900	4										SVOCs
5. 14, 5	SP-5					0930	4										Metals
6. 15, 6	SP-6					0945	4										
7. [illegible]	~~SP-7~~						4										
8. 16 7	~~SP~~ G-1					0920	4										
9. 17 8	G-2	↓	↓		↓	1100	4	↓	↓	↓	↓	↓	↓	↓	↓	↓	
10. 9	Trip Blank	W					2	↓									

PRESERVATIVES: ← Specify Preservatives
A-HCl B-HNO_3 C-H_2SO_4 D-NaOH E-ICE F-Other

SAMPLE CUSTODY MUST BE DOCUMENTED BELOW EACH TIME SAMPLES CHANGE POSSESSION INCLUDING COURIER DELIVERY

RELINQUISHED BY SAMPLER:	DATE/TIME:	RECEIVED BY:
1. R. Hart	0800 2-4-09	1.
RELINQUISHED BY:	DATE/TIME:	RECEIVED BY:
2.		2.
RELINQUISHED BY:	DATE/TIME:	RECEIVED FOR LAB BY:
3.	2-4-09 84	3.

Conditions of bottles or coolers at receipt: ☒ Compliant ☐ Non Compliant
MeOH extraction requires an additional 4 oz jar for percent solid.
Comments:

Cooler Temp. 4°C
Ice in Cooler?: YES

Page 1 of 1

SHIPPED VIA: CLIENT: ☒ HAND DELIVERED ☐ OVERNIGHT
CHEMTECH: ☐ PICKED UP ☐ OVERNIGHT

Shipment Complete: ☒ YES ☐ NO

WHITE - CHEMTECH COPY FOR RETURN TO CLIENT YELLOW - CHEMTECH COPY PINK - SAMPLER COPY

CHEMTECH 284 Sheffield Street, Mountainside, New Jersey 07092 Phone : 908 789 8900 Fax : 908 789 8922

Report Of Analysis

Client :	**EPM, INC.**	**Date Collected :**	**02/03/09**
Project Id :	**Borden Avenue Bridge**	**Date Received :**	**02/04/09**
Test :	**Mercury**	**Lab Sample ID :**	**A1357-01**
SDG ID :	**A1357**	**Customer Sample No. :**	**SP-1**
% Moisture :	**15.3**	**Analytical Method :**	**EPA SW-846 7471 - HG**
DataFile :	**LB42833.PRN**	**Result Type :**	**Final**

CasNumber	Parameter	Results	Qualifier	Units	DL	RT/RL	DF	DIL/RE
7439-97-6	Mercury	0.297		mg/Kg	0.008	0.236	1	

ALPHA ANALYTICAL

ANALYTICAL REPORT

Lab Number:	L0905825
Client:	Environmental Planning and Management 1983 Marcus Avenue Suite 109 Lake Success, NY 11042
ATTN:	Rick Hart
Project Name:	BORDEN AVE.
Project Number:	29007
Report Date:	05/12/09

Certifications & Approvals: MA (M-MA086), NY NELAC (11148), CT (PH-0574), NH (2003), NJ (MA935), RI (LAO00065), ME (MA0086), PA (Registration #68-03671), USDA (Permit #S-72578), US Army Corps of Engineers, Naval FESC.

Eight Walkup Drive, Westborough, MA 01581-1019
508-898-9220 (Fax) 508-898-9193 800-624-9220 - www.alphalab.com

Project Name: BORDEN AVE.
Project Number: 29007

Lab Number: L0905825
Report Date: 05/12/09

Alpha Sample ID	Client ID	Sample Location	Collection Date/Time
L0905825-01	S-1	LIC, NY	05/07/09 12:10

Project Name:	BORDEN AVE.	**Lab Number:**	L0905825
Project Number:	29007	**Report Date:**	05/12/09

Case Narrative

The samples were received in accordance with the Chain of Custody and no significant deviations were encountered during the preparation or analysis unless otherwise noted. Sample Receipt, Container Information, and the Chain of Custody are located at the back of the report.

Results contained within this report relate only to the samples submitted under this Alpha Lab Number and meet all of the requirements of NELAC, for all NELAC accredited parameters. The data presented in this report is organized by parameter (i.e. VOC, SVOC, etc.). Sample specific Quality Control data (i.e. Surrogate Spike Recovery) is reported at the end of the target analyte list for each individual sample, followed by the Laboratory Batch Quality Control at the end of each parameter. If a sample was re-analyzed or re-extracted due to a required quality control corrective action and if both sets of data are reported, the Laboratory ID of the re-analysis or re-extraction is designated with an "R" or "RE", respectively. When multiple Batch Quality Control elements are reported (e.g. more than one LCS), the associated samples for each element are noted in the grey shaded header line of each data table. Any Laboratory Batch, Sample Specific % recovery or RPD value that is outside the listed Acceptance Criteria is bolded in the report.

Please see the associated ADEx data file for a comparison of laboratory reporting limits that were achieved with the regulatory Numerical Standards requested on the Chain of Custody.

For additional information, please contact Client Services at 800-624-9220.

Report Submission

The results of the TCLP Herbicide analysis will be issued under separate cover.

Sample Receipt

The element lists for the metals analyses were specified by the client.

The sample was received in inappropriate containers for the Volatile Organics analysis. The analysis was performed at the client's request.

Project Name:	BORDEN AVE.	**Lab Number:**	L0905825
Project Number:	29007	**Report Date:**	05/12/09

Case Narrative (continued)

Volatile Organics

L0905825-01 has elevated detection limits due to the dilution required by the elevated concentrations of non-target compounds in the sample.

Semivolatile Organics

L0905825-01 was re-analyzed on dilution in order to quantitate the sample within the calibration range. The result should be considered estimated, and is qualified with an E flag, for any compound that exceeded the calibration on the initial analysis. The re-analysis was performed only for the compound that exceeded the calibration range.

Gasoline Range Organics

L0905825-01 has an elevated detection limit due to the dilution required by the elevated concentrations of target compounds in the sample.

Petroleum Hydrocarbon Quantitation

L0905825-01 and the associated WG361750-3 Laboratory Duplicate have elevated detection limits due to the dilutions required by the elevated concentrations of target compounds in the samples.

PCB

L0905825-01: Aroclor 1248 may be present in this sample; however, due to the presence of Aroclors 1254 and 1260, the concentration of Aroclor 1248 cannot be accurately quantitated.

L0905825-01 has elevated detection limits due to the dilution required by the elevated concentrations of target compounds in the sample.

The surrogate recoveries for L0905825-01 are below the acceptance criteria for 2,4,5,6-Tetrachloro-m-xylene (0%) and Decachlorobiphenyl (0%) due to the dilution required to quantitate the sample. Re-extraction is not required; therefore, the results of the original analysis are reported.

Project Name:	BORDEN AVE.	**Lab Number:**	L0905825
Project Number:	29007	**Report Date:**	05/12/09

Case Narrative (continued)

Pesticides

L0905825-01 has elevated detection limits due to the dilution required by the elevated concentrations of non-target compounds in the sample.

The surrogate recovery for L0905825-01 is above the individual acceptance criteria for Decachlorobiphenyl (175%), but within the overall method allowances. The results of the original analysis are reported.

The WG361889-2/-3 LCS/LCSD RPDs associated with L0905825-01 are above the acceptance criteria for Delta-BHC (84%), Lindane (84%), Alpha-BHC (87%), Beta-BHC (77%), Heptachlor (85%), Aldrin (87%), Heptachlor epoxide (84%), Endrin (87%), Endrin ketone (84%), Dieldrin (88%), 4,4'-DDE (89%), 4,4'-DDD (87%), 4,4'-DDT (88%),Endosulfan I (88%), Endosulfan II (81%), Endosulfan sulfate (80%), Methoxychlor (82%), and trans-Chlordane (85%); however, the individual LCS/LCSD recoveries are within method limits. The results of the associated sample are reported.

Total Metals

L0905825-01 has an elevated detection limit for Zinc due to the dilution required to quantitate the result within the calibration range.

The WG361930-4 MS recovery for Mercury (0%), associated with L0905825-01, is invalid because the sample concentration is greater than four times the spike amount added.

The WG361930-3 Laboratory Duplicate has an elevated detection limit for Mercury due to the dilution required to quantitate the result within the calibration range.

The WG361930-3 Laboratory Duplicate RPD associated with L0905825-01 is outside the acceptance criteria for Mercury (71%). The elevated RPD has been attributed to the non-homogenous nature of the sample utilized for the laboratory duplicate.

Reactive Sulfide

L0905825-01 has an elevated detection limit due to the dilution required to quantitate the result within the calibration range.

I, the undersigned, attest under the pains and penalties of perjury that, to the best of my knowledge and belief and based upon my personal inquiry of those responsible for providing the information contained in this analytical report, such information is accurate and complete. This certificate of analysis is not complete unless this page accompanies any and all pages of this report.

Authorized Signature: Elizabeth A. Simmons

Title: Technical Director/Representative Date: 05/12/09

ORGANICS

VOLATILES

Project Name: BORDEN AVE.
Project Number: 29007

Lab Number: L0905825
Report Date: 05/12/09

SAMPLE RESULTS

Lab ID:	L0905825-01	Date Collected:	05/07/09 12:10
Client ID:	S-1	Date Received:	05/07/09
Sample Location:	LIC, NY	Field Prep:	Not Specified
Matrix:	Soil		
Analytical Method:	1,8260B		
Analytical Date:	05/12/09 16:05		
Analyst:	MM		
Percent Solids:	67%		
TCLP/SPLP Ext. Date	05/11/09 14:20		

Parameter	Result	Qualifier	Units	RDL	Dilution Factor
TCLP Volatiles by EPA 1311 - Westborough Lab					
Chloroform	ND		ug/l	7.5	10
Carbon tetrachloride	ND		ug/l	5.0	10
Tetrachloroethene	ND		ug/l	5.0	10
Chlorobenzene	ND		ug/l	5.0	10
1,2-Dichloroethane	ND		ug/l	5.0	10
Benzene	ND		ug/l	5.0	10
Vinyl chloride	ND		ug/l	10	10
1,1-Dichloroethene	ND		ug/l	5.0	10
Trichloroethene	ND		ug/l	5.0	10
1,4-Dichlorobenzene	ND		ug/l	25	10
2-Butanone	ND		ug/l	50	10

Surrogate	% Recovery	Qualifier	Acceptance Criteria
1,2-Dichloroethane-d4	102		70-130
Toluene-d8	97		70-130
4-Bromofluorobenzene	102		70-130
Dibromofluoromethane	101		70-130

Project Name: BORDEN AVE.
Project Number: 29007

Lab Number: L0905825
Report Date: 05/12/09

SAMPLE RESULTS

Lab ID: L0905825-01
Client ID: S-1
Sample Location: LIC, NY
Matrix: Soil
Analytical Method: 1,8260B
Analytical Date: 05/08/09 12:13
Analyst: PD
Percent Solids: 67%

Date Collected: 05/07/09 12:10
Date Received: 05/07/09
Field Prep: Not Specified

Parameter	Result	Qualifier	Units	RDL	Dilution Factor
Volatile Organics by GC/MS - Westborough Lab					
Methylene chloride	ND		ug/kg	3700	100
1,1-Dichloroethane	ND		ug/kg	560	100
Chloroform	ND		ug/kg	560	100
Carbon tetrachloride	ND		ug/kg	370	100
1,2-Dichloropropane	ND		ug/kg	1300	100
Dibromochloromethane	ND		ug/kg	370	100
1,1,2-Trichloroethane	ND		ug/kg	560	100
Tetrachloroethene	ND		ug/kg	370	100
Chlorobenzene	ND		ug/kg	370	100
Trichlorofluoromethane	ND		ug/kg	1900	100
1,2-Dichloroethane	ND		ug/kg	370	100
1,1,1-Trichloroethane	ND		ug/kg	370	100
Bromodichloromethane	ND		ug/kg	370	100
trans-1,3-Dichloropropene	ND		ug/kg	370	100
cis-1,3-Dichloropropene	ND		ug/kg	370	100
1,1-Dichloropropene	ND		ug/kg	1900	100
Bromoform	ND		ug/kg	1500	100
1,1,2,2-Tetrachloroethane	ND		ug/kg	370	100
Benzene	ND		ug/kg	370	100
Toluene	ND		ug/kg	560	100
Ethylbenzene	ND		ug/kg	370	100
Chloromethane	ND		ug/kg	1900	100
Bromomethane	ND		ug/kg	750	100
Vinyl chloride	ND		ug/kg	750	100
Chloroethane	ND		ug/kg	750	100
1,1-Dichloroethene	ND		ug/kg	370	100
trans-1,2-Dichloroethene	ND		ug/kg	560	100
Trichloroethene	ND		ug/kg	370	100
1,2-Dichlorobenzene	ND		ug/kg	1900	100
1,3-Dichlorobenzene	ND		ug/kg	1900	100

Project Name: BORDEN AVE.
Project Number: 29007
Lab Number: L0905825
Report Date: 05/12/09

SAMPLE RESULTS

Lab ID: L0905825-01
Client ID: S-1
Sample Location: LIC, NY
Date Collected: 05/07/09 12:10
Date Received: 05/07/09
Field Prep: Not Specified

Parameter	Result	Qualifier	Units	RDL	Dilution Factor
Volatile Organics by GC/MS - Westborough Lab					
1,4-Dichlorobenzene	ND		ug/kg	1900	100
Methyl tert butyl ether	ND		ug/kg	750	100
p/m-Xylene	ND		ug/kg	750	100
o-Xylene	ND		ug/kg	750	100
cis-1,2-Dichloroethene	ND		ug/kg	370	100
Dibromomethane	ND		ug/kg	3700	100
Styrene	ND		ug/kg	750	100
Dichlorodifluoromethane	ND		ug/kg	3700	100
Acetone	ND		ug/kg	3700	100
Carbon disulfide	ND		ug/kg	3700	100
2-Butanone	ND		ug/kg	3700	100
Vinyl acetate	ND		ug/kg	3700	100
4-Methyl-2-pentanone	ND		ug/kg	3700	100
1,2,3-Trichloropropane	ND		ug/kg	3700	100
2-Hexanone	ND		ug/kg	3700	100
Bromochloromethane	ND		ug/kg	1900	100
2,2-Dichloropropane	ND		ug/kg	1900	100
1,2-Dibromoethane	ND		ug/kg	1500	100
1,3-Dichloropropane	ND		ug/kg	1900	100
1,1,1,2-Tetrachloroethane	ND		ug/kg	370	100
Bromobenzene	ND		ug/kg	1900	100
n-Butylbenzene	680		ug/kg	370	100
sec-Butylbenzene	390		ug/kg	370	100
tert-Butylbenzene	ND		ug/kg	1900	100
o-Chlorotoluene	ND		ug/kg	1900	100
p-Chlorotoluene	ND		ug/kg	1900	100
1,2-Dibromo-3-chloropropane	ND		ug/kg	1900	100
Hexachlorobutadiene	ND		ug/kg	1900	100
Isopropylbenzene	ND		ug/kg	370	100
p-Isopropyltoluene	650		ug/kg	370	100
Naphthalene	8700		ug/kg	1900	100
Acrylonitrile	ND		ug/kg	3700	100
n-Propylbenzene	ND		ug/kg	370	100
1,2,3-Trichlorobenzene	ND		ug/kg	1900	100
1,2,4-Trichlorobenzene	ND		ug/kg	1900	100
1,3,5-Trimethylbenzene	ND		ug/kg	1900	100
1,2,4-Trimethylbenzene	2900		ug/kg	1900	100

Project Name: BORDEN AVE.
Project Number: 29007
Lab Number: L0905825
Report Date: 05/12/09

SAMPLE RESULTS

Lab ID: L0905825-01
Client ID: S-1
Sample Location: LIC, NY
Date Collected: 05/07/09 12:10
Date Received: 05/07/09
Field Prep: Not Specified

Parameter	Result	Qualifier	Units	RDL	Dilution Factor
Volatile Organics by GC/MS - Westborough Lab					
1,4-Diethylbenzene	2500		ug/kg	1500	100
4-Ethyltoluene	ND		ug/kg	1500	100
1,2,4,5-Tetramethylbenzene	1700		ug/kg	1500	100
Ethyl ether	ND		ug/kg	1900	100
trans-1,4-Dichloro-2-butene	ND		ug/kg	1900	100

Surrogate	% Recovery	Qualifier	Acceptance Criteria
1,2-Dichloroethane-d4	101		70-130
Toluene-d8	101		70-130
4-Bromofluorobenzene	108		70-130
Dibromofluoromethane	79		70-130

Project Name: BORDEN AVE. **Lab Number:** L0905825

Project Number: 29007 **Report Date:** 05/12/09

Method Blank Analysis
Batch Quality Control

Analytical Method: 1,8260B
Analytical Date: 05/08/09 09:11
Analyst: PD

Parameter	Result	Qualifier	Units	RDL
Volatile Organics by GC/MS - Westborough Lab for sample(s): 01 Batch: WG361788-3				
Methylene chloride	ND		ug/kg	25
1,1-Dichloroethane	ND		ug/kg	3.8
Chloroform	ND		ug/kg	3.8
Carbon tetrachloride	ND		ug/kg	2.5
1,2-Dichloropropane	ND		ug/kg	8.8
Dibromochloromethane	ND		ug/kg	2.5
1,1,2-Trichloroethane	ND		ug/kg	3.8
Tetrachloroethene	ND		ug/kg	2.5
Chlorobenzene	ND		ug/kg	2.5
Trichlorofluoromethane	ND		ug/kg	12
1,2-Dichloroethane	ND		ug/kg	2.5
1,1,1-Trichloroethane	ND		ug/kg	2.5
Bromodichloromethane	ND		ug/kg	2.5
trans-1,3-Dichloropropene	ND		ug/kg	2.5
cis-1,3-Dichloropropene	ND		ug/kg	2.5
1,1-Dichloropropene	ND		ug/kg	12
Bromoform	ND		ug/kg	10
1,1,2,2-Tetrachloroethane	ND		ug/kg	2.5
Benzene	ND		ug/kg	2.5
Toluene	ND		ug/kg	3.8
Ethylbenzene	ND		ug/kg	2.5
Chloromethane	ND		ug/kg	12
Bromomethane	ND		ug/kg	5.0
Vinyl chloride	ND		ug/kg	5.0
Chloroethane	ND		ug/kg	5.0
1,1-Dichloroethene	ND		ug/kg	2.5
trans-1,2-Dichloroethene	ND		ug/kg	3.8
Trichloroethene	ND		ug/kg	2.5
1,2-Dichlorobenzene	ND		ug/kg	12
1,3-Dichlorobenzene	ND		ug/kg	12
1,4-Dichlorobenzene	ND		ug/kg	12

Project Name: BORDEN AVE. **Lab Number:** L0905825

Project Number: 29007 **Report Date:** 05/12/09

Method Blank Analysis
Batch Quality Control

Analytical Method: 1,8260B
Analytical Date: 05/08/09 09:11
Analyst: PD

Parameter	Result	Qualifier	Units	RDL
Volatile Organics by GC/MS - Westborough Lab for sample(s): 01 Batch: WG361788-3				
Methyl tert butyl ether	ND		ug/kg	5.0
p/m-Xylene	ND		ug/kg	5.0
o-Xylene	ND		ug/kg	5.0
cis-1,2-Dichloroethene	ND		ug/kg	2.5
Dibromomethane	ND		ug/kg	25
Styrene	ND		ug/kg	5.0
Dichlorodifluoromethane	ND		ug/kg	25
Acetone	ND		ug/kg	25
Carbon disulfide	ND		ug/kg	25
2-Butanone	ND		ug/kg	25
Vinyl acetate	ND		ug/kg	25
4-Methyl-2-pentanone	ND		ug/kg	25
1,2,3-Trichloropropane	ND		ug/kg	25
2-Hexanone	ND		ug/kg	25
Bromochloromethane	ND		ug/kg	12
2,2-Dichloropropane	ND		ug/kg	12
1,2-Dibromoethane	ND		ug/kg	10
1,3-Dichloropropane	ND		ug/kg	12
1,1,1,2-Tetrachloroethane	ND		ug/kg	2.5
Bromobenzene	ND		ug/kg	12
n-Butylbenzene	ND		ug/kg	2.5
sec-Butylbenzene	ND		ug/kg	2.5
tert-Butylbenzene	ND		ug/kg	12
o-Chlorotoluene	ND		ug/kg	12
p-Chlorotoluene	ND		ug/kg	12
1,2-Dibromo-3-chloropropane	ND		ug/kg	12
Hexachlorobutadiene	ND		ug/kg	12
Isopropylbenzene	ND		ug/kg	2.5
p-Isopropyltoluene	ND		ug/kg	2.5
Naphthalene	ND		ug/kg	12
Acrylonitrile	ND		ug/kg	25

Project Name: BORDEN AVE.
Project Number: 29007

Lab Number: L0905825
Report Date: 05/12/09

Method Blank Analysis
Batch Quality Control

Analytical Method: 1,8260B
Analytical Date: 05/08/09 09:11
Analyst: PD

Parameter	Result	Qualifier	Units	RDL
Volatile Organics by GC/MS - Westborough Lab for sample(s): 01 Batch: WG361788-3				
n-Propylbenzene	ND		ug/kg	2.5
1,2,3-Trichlorobenzene	ND		ug/kg	12
1,2,4-Trichlorobenzene	ND		ug/kg	12
1,3,5-Trimethylbenzene	ND		ug/kg	12
1,2,4-Trimethylbenzene	ND		ug/kg	12
1,4-Diethylbenzene	ND		ug/kg	10
4-Ethyltoluene	ND		ug/kg	10
1,2,4,5-Tetramethylbenzene	ND		ug/kg	10
Ethyl ether	ND		ug/kg	12
trans-1,4-Dichloro-2-butene	ND		ug/kg	12

Tentatively Identified Compounds

No Tentatively Identified Compounds	ND		ug/kg

Surrogate	%Recovery	Qualifier	Acceptance Criteria
1,2-Dichloroethane-d4	102		70-130
Toluene-d8	100		70-130
4-Bromofluorobenzene	100		70-130
Dibromofluoromethane	92		70-130

Project Name: BORDEN AVE.
Project Number: 29007

Lab Number: L0905825
Report Date: 05/12/09

Method Blank Analysis
Batch Quality Control

Analytical Method: 1,8260B
Analytical Date: 05/12/09 15:27
Analyst: MM
TCLP Extraction Date: 05/11/09 14:20

Parameter	Result	Qualifier	Units	RDL
TCLP Volatiles by EPA 1311 - Westborough Lab for sample(s): 01 Batch: WG362189-3				
Chloroform	ND		ug/l	7.5
Carbon tetrachloride	ND		ug/l	5.0
Tetrachloroethene	ND		ug/l	5.0
Chlorobenzene	ND		ug/l	5.0
1,2-Dichloroethane	ND		ug/l	5.0
Benzene	ND		ug/l	5.0
Vinyl chloride	ND		ug/l	10
1,1-Dichloroethene	ND		ug/l	5.0
Trichloroethene	ND		ug/l	5.0
1,4-Dichlorobenzene	ND		ug/l	25
2-Butanone	ND		ug/l	50

Surrogate	%Recovery	Qualifier	Acceptance Criteria
1,2-Dichloroethane-d4	99		70-130
Toluene-d8	99		70-130
4-Bromofluorobenzene	102		70-130
Dibromofluoromethane	100		70-130

Lab Control Sample Analysis
Batch Quality Control

Project Name: BORDEN AVE.
Project Number: 29007

Lab Number: L0905825
Report Date: 05/12/09

Parameter	LCS %Recovery	LCSD %Recovery	%Recovery Limits	RPD	RPD Limits
Volatile Organics by GC/MS - Westborough Lab Associated sample(s): 01 Batch: WG361788-1 WG361788-2					
Chlorobenzene	98	92	60-133	6	30
Benzene	98	93	66-142	5	30
Toluene	97	91	59-139	6	30
1,1-Dichloroethene	94	88	59-172	7	30
Trichloroethene	99	95	62-137	4	30

Surrogate	LCS %Recovery	Qualifier	LCSD %Recovery	Qualifier	Acceptance Criteria
1,2-Dichloroethane-d4	110		103		70-130
Toluene-d8	104		97		70-130
4-Bromofluorobenzene	104		98		70-130
Dibromofluoromethane	107		97		70-130

Lab Control Sample Analysis

Batch Quality Control

Project Name: BORDEN AVE.
Project Number: 29007

Lab Number: L0905825
Report Date: 05/12/09

Parameter	LCS %Recovery	LCSD %Recovery	%Recovery Limits	RPD	RPD Limits
TCLP Volatiles by EPA 1311 - Westborough Lab Associated sample(s): 01 Batch: WG362189-1 WG362189-2					
Chloroform	98	96	70-130	2	20
Carbon tetrachloride	98	83	70-130	17	20
Tetrachloroethene	104	94	70-130	10	20
Chlorobenzene	100	94	75-130	6	20
1,2-Dichloroethane	100	96	70-130	4	20
Benzene	98	93	76-127	5	20
Vinyl chloride	97	98	70-130	1	20
1,1-Dichloroethene	97	97	61-145	0	20
Trichloroethene	98	93	71-120	5	20
1,4-Dichlorobenzene	102	95	70-130	7	20
2-Butanone	95	93	70-130	2	20

Surrogate	LCS %Recovery	Qualifier	LCSD %Recovery	Qualifier	Acceptance Criteria
1,2-Dichloroethane-d4	99		97		70-130
Toluene-d8	100		101		70-130
4-Bromofluorobenzene	101		102		70-130
Dibromofluoromethane	98		100		70-130

SEMIVOLATILES

Project Name: BORDEN AVE. **Lab Number:** L0905825

Project Number: 29007 **Report Date:** 05/12/09

SAMPLE RESULTS

Lab ID:	L0905825-01	Date Collected:	05/07/09 12:10
Client ID:	S-1	Date Received:	05/07/09
Sample Location:	LIC, NY	Field Prep:	Not Specified
Matrix:	Soil	Extraction Method:	EPA 3510C
Analytical Method:	1,8270C	Extraction Date:	05/11/09 11:25
Analytical Date:	05/12/09 16:18		
Analyst:	PS		
Percent Solids:	67%		
TCLP/SPLP Ext. Date	05/08/09 18:00		

Parameter	Result	Qualifier	Units	RDL	Dilution Factor
TCLP Semivolatiles by EPA 1311 - Westborough Lab					
Hexachlorobenzene	ND		ug/l	25	1
2,4-Dinitrotoluene	ND		ug/l	30	1
Hexachlorobutadiene	ND		ug/l	50	1
Hexachloroethane	ND		ug/l	25	1
Nitrobenzene	ND		ug/l	25	1
2,4,6-Trichlorophenol	ND		ug/l	25	1
Pentachlorophenol	ND		ug/l	50	1
2-Methylphenol	ND		ug/l	30	1
3-Methylphenol/4-Methylphenol	ND		ug/l	30	1
2,4,5-Trichlorophenol	ND		ug/l	25	1
Pyridine	ND		ug/l	250	1

Surrogate	% Recovery	Qualifier	Acceptance Criteria
2-Fluorophenol	78		21-120
Phenol-d6	82		10-120
Nitrobenzene-d5	85		23-120
2-Fluorobiphenyl	82		43-120
2,4,6-Tribromophenol	103		10-120
4-Terphenyl-d14	108		33-120

Project Name: BORDEN AVE.
Project Number: 29007

Lab Number: L0905825
Report Date: 05/12/09

SAMPLE RESULTS

Lab ID:	L0905825-01	Date Collected:	05/07/09 12:10
Client ID:	S-1	Date Received:	05/07/09
Sample Location:	LIC, NY	Field Prep:	Not Specified
Matrix:	Soil	Extraction Method:	EPA 3545
Analytical Method:	1,8270C	Extraction Date:	05/08/09 04:05
Analytical Date:	05/12/09 12:17		
Analyst:	PS		
Percent Solids:	67%		

Parameter	Result	Qualifier	Units	RDL	Dilution Factor
Semivolatile Organics by GC/MS - Westborough Lab					
Acenaphthene	2700		ug/kg	500	1
1,2,4-Trichlorobenzene	ND		ug/kg	500	1
Hexachlorobenzene	ND		ug/kg	500	1
Bis(2-chloroethyl)ether	ND		ug/kg	500	1
2-Chloronaphthalene	ND		ug/kg	600	1
1,2-Dichlorobenzene	ND		ug/kg	500	1
1,3-Dichlorobenzene	ND		ug/kg	500	1
1,4-Dichlorobenzene	ND		ug/kg	500	1
3,3'-Dichlorobenzidine	ND		ug/kg	1000	1
2,4-Dinitrotoluene	ND		ug/kg	500	1
2,6-Dinitrotoluene	ND		ug/kg	500	1
Fluoranthene	11000		ug/kg	500	1
4-Chlorophenyl phenyl ether	ND		ug/kg	500	1
4-Bromophenyl phenyl ether	ND		ug/kg	500	1
Bis(2-chloroisopropyl)ether	ND		ug/kg	500	1
Bis(2-chloroethoxy)methane	ND		ug/kg	500	1
Hexachlorobutadiene	ND		ug/kg	1000	1
Hexachlorocyclopentadiene	ND		ug/kg	1000	1
Hexachloroethane	ND		ug/kg	500	1
Isophorone	ND		ug/kg	500	1
Naphthalene	4800		ug/kg	500	1
Nitrobenzene	ND		ug/kg	500	1
NitrosoDiPhenylAmine(NDPA)/DPA	ND		ug/kg	1500	1
n-Nitrosodi-n-propylamine	ND		ug/kg	500	1
Bis(2-Ethylhexyl)phthalate	70000	E	ug/kg	1000	1
Butyl benzyl phthalate	ND		ug/kg	500	1
Di-n-butylphthalate	ND		ug/kg	500	1
Di-n-octylphthalate	ND		ug/kg	500	1
Diethyl phthalate	ND		ug/kg	500	1
Dimethyl phthalate	ND		ug/kg	500	1

Project Name: BORDEN AVE.
Project Number: 29007

Lab Number: L0905825
Report Date: 05/12/09

SAMPLE RESULTS

Lab ID: L0905825-01
Client ID: S-1
Sample Location: LIC, NY

Date Collected: 05/07/09 12:10
Date Received: 05/07/09
Field Prep: Not Specified

Parameter	Result	Qualifier	Units	RDL	Dilution Factor
Semivolatile Organics by GC/MS - Westborough Lab					
Benzo(a)anthracene	4200		ug/kg	500	1
Benzo(a)pyrene	2600		ug/kg	500	1
Benzo(b)fluoranthene	2300		ug/kg	500	1
Benzo(k)fluoranthene	2400		ug/kg	500	1
Chrysene	4300		ug/kg	500	1
Acenaphthylene	970		ug/kg	500	1
Anthracene	4400		ug/kg	500	1
Benzo(ghi)perylene	1400		ug/kg	500	1
Fluorene	3100		ug/kg	500	1
Phenanthrene	13000		ug/kg	500	1
Dibenzo(a,h)anthracene	ND		ug/kg	500	1
Indeno(1,2,3-cd)Pyrene	1100		ug/kg	500	1
Pyrene	12000		ug/kg	500	1
Biphenyl	ND		ug/kg	500	1
4-Chloroaniline	ND		ug/kg	500	1
2-Nitroaniline	ND		ug/kg	500	1
3-Nitroaniline	ND		ug/kg	500	1
4-Nitroaniline	ND		ug/kg	700	1
Dibenzofuran	1700		ug/kg	500	1
2-Methylnaphthalene	4500		ug/kg	500	1
1,2,4,5-Tetrachlorobenzene	ND		ug/kg	2000	1
Acetophenone	ND		ug/kg	2000	1
2,4,6-Trichlorophenol	ND		ug/kg	500	1
P-Chloro-M-Cresol	ND		ug/kg	500	1
2-Chlorophenol	ND		ug/kg	600	1
2,4-Dichlorophenol	ND		ug/kg	1000	1
2,4-Dimethylphenol	ND		ug/kg	500	1
2-Nitrophenol	ND		ug/kg	2000	1
4-Nitrophenol	ND		ug/kg	1000	1
2,4-Dinitrophenol	ND		ug/kg	2000	1
4,6-Dinitro-o-cresol	ND		ug/kg	2000	1
Pentachlorophenol	ND		ug/kg	2000	1
Phenol	ND		ug/kg	700	1
2-Methylphenol	ND		ug/kg	600	1
3-Methylphenol/4-Methylphenol	ND		ug/kg	600	1
2,4,5-Trichlorophenol	ND		ug/kg	500	1
Benzoic Acid	ND		ug/kg	5000	1

Project Name: BORDEN AVE.
Project Number: 29007
Lab Number: L0905825
Report Date: 05/12/09

SAMPLE RESULTS

Lab ID: L0905825-01
Client ID: S-1
Sample Location: LIC, NY

Date Collected: 05/07/09 12:10
Date Received: 05/07/09
Field Prep: Not Specified

Parameter	Result	Qualifier	Units	RDL	Dilution Factor
Semivolatile Organics by GC/MS - Westborough Lab					
Benzyl Alcohol	ND		ug/kg	1000	1
Carbazole	ND		ug/kg	500	1

Surrogate	% Recovery	Qualifier	Acceptance Criteria
2-Fluorophenol	75		25-120
Phenol-d6	81		10-120
Nitrobenzene-d5	77		23-120
2-Fluorobiphenyl	79		30-120
2,4,6-Tribromophenol	89		19-120
4-Terphenyl-d14	85		18-120

Project Name: BORDEN AVE.
Project Number: 29007

Lab Number: L0905825
Report Date: 05/12/09

SAMPLE RESULTS

Lab ID:	L0905825-01	R	Date Collected:	05/07/09 12:10
Client ID:	S-1		Date Received:	05/07/09
Sample Location:	LIC, NY		Field Prep:	Not Specified
Matrix:	Soil		Extraction Method:	EPA 3545
Analytical Method:	1,8270C		Extraction Date:	05/08/09 04:05
Analytical Date:	05/12/09 17:22			
Analyst:	PS			
Percent Solids:	67%			

Parameter	Result	Qualifier	Units	RDL	Dilution Factor
Semivolatile Organics by GC/MS - Westborough Lab					
Bis(2-Ethylhexyl)phthalate	120000		ug/kg	10000	10

Project Name: BORDEN AVE.
Project Number: 29007

Lab Number: L0905825
Report Date: 05/12/09

Method Blank Analysis
Batch Quality Control

Analytical Method: 1,8270C
Analytical Date: 05/08/09 17:08
Analyst: PS

Extraction Method: EPA 3545
Extraction Date: 05/08/09 04:05

Parameter	Result	Qualifier	Units	RDL
Semivolatile Organics by GC/MS - Westborough Lab for sample(s): 01 Batch: WG361726-1				
Acenaphthene	ND		ug/kg	330
1,2,4-Trichlorobenzene	ND		ug/kg	330
Hexachlorobenzene	ND		ug/kg	330
Bis(2-chloroethyl)ether	ND		ug/kg	330
2-Chloronaphthalene	ND		ug/kg	400
1,2-Dichlorobenzene	ND		ug/kg	330
1,3-Dichlorobenzene	ND		ug/kg	330
1,4-Dichlorobenzene	ND		ug/kg	330
3,3'-Dichlorobenzidine	ND		ug/kg	670
2,4-Dinitrotoluene	ND		ug/kg	330
2,6-Dinitrotoluene	ND		ug/kg	330
Fluoranthene	ND		ug/kg	330
4-Chlorophenyl phenyl ether	ND		ug/kg	330
4-Bromophenyl phenyl ether	ND		ug/kg	330
Bis(2-chloroisopropyl)ether	ND		ug/kg	330
Bis(2-chloroethoxy)methane	ND		ug/kg	330
Hexachlorobutadiene	ND		ug/kg	670
Hexachlorocyclopentadiene	ND		ug/kg	670
Hexachloroethane	ND		ug/kg	330
Isophorone	ND		ug/kg	330
Naphthalene	ND		ug/kg	330
Nitrobenzene	ND		ug/kg	330
NitrosoDiPhenylAmine(NDPA)/DPA	ND		ug/kg	1000
n-Nitrosodi-n-propylamine	ND		ug/kg	330
Bis(2-Ethylhexyl)phthalate	ND		ug/kg	670
Butyl benzyl phthalate	ND		ug/kg	330
Di-n-butylphthalate	ND		ug/kg	330
Di-n-octylphthalate	ND		ug/kg	330
Diethyl phthalate	ND		ug/kg	330
Dimethyl phthalate	ND		ug/kg	330
Benzo(a)anthracene	ND		ug/kg	330

Project Name: BORDEN AVE. **Lab Number:** L0905825

Project Number: 29007 **Report Date:** 05/12/09

Method Blank Analysis
Batch Quality Control

Analytical Method: 1,8270C
Analytical Date: 05/08/09 17:08
Analyst: PS

Extraction Method: EPA 3545
Extraction Date: 05/08/09 04:05

Parameter	Result	Qualifier	Units	RDL
Semivolatile Organics by GC/MS - Westborough Lab for sample(s): 01 Batch: WG361726-1				
Benzo(a)pyrene	ND		ug/kg	330
Benzo(b)fluoranthene	ND		ug/kg	330
Benzo(k)fluoranthene	ND		ug/kg	330
Chrysene	ND		ug/kg	330
Acenaphthylene	ND		ug/kg	330
Anthracene	ND		ug/kg	330
Benzo(ghi)perylene	ND		ug/kg	330
Fluorene	ND		ug/kg	330
Phenanthrene	ND		ug/kg	330
Dibenzo(a,h)anthracene	ND		ug/kg	330
Indeno(1,2,3-cd)Pyrene	ND		ug/kg	330
Pyrene	ND		ug/kg	330
Biphenyl	ND		ug/kg	330
4-Chloroaniline	ND		ug/kg	330
2-Nitroaniline	ND		ug/kg	330
3-Nitroaniline	ND		ug/kg	330
4-Nitroaniline	ND		ug/kg	470
Dibenzofuran	ND		ug/kg	330
2-Methylnaphthalene	ND		ug/kg	330
1,2,4,5-Tetrachlorobenzene	ND		ug/kg	1300
Acetophenone	ND		ug/kg	1300
2,4,6-Trichlorophenol	ND		ug/kg	330
P-Chloro-M-Cresol	ND		ug/kg	330
2-Chlorophenol	ND		ug/kg	400
2,4-Dichlorophenol	ND		ug/kg	670
2,4-Dimethylphenol	ND		ug/kg	330
2-Nitrophenol	ND		ug/kg	1300
4-Nitrophenol	ND		ug/kg	670
2,4-Dinitrophenol	ND		ug/kg	1300
4,6-Dinitro-o-cresol	ND		ug/kg	1300
Pentachlorophenol	ND		ug/kg	1300

Project Name: BORDEN AVE. **Lab Number:** L0905825

Project Number: 29007 **Report Date:** 05/12/09

Method Blank Analysis
Batch Quality Control

Analytical Method: 1,8270C
Analytical Date: 05/08/09 17:08
Analyst: PS

Extraction Method: EPA 3545
Extraction Date: 05/08/09 04:05

Parameter	Result	Qualifier	Units	RDL
Semivolatile Organics by GC/MS - Westborough Lab for sample(s): 01 Batch: WG361726-1				
Phenol	ND		ug/kg	470
2-Methylphenol	ND		ug/kg	400
3-Methylphenol/4-Methylphenol	ND		ug/kg	400
2,4,5-Trichlorophenol	ND		ug/kg	330
Benzoic Acid	ND		ug/kg	3300
Benzyl Alcohol	ND		ug/kg	670
Carbazole	ND		ug/kg	330

Surrogate	%Recovery	Qualifier	Acceptance Criteria
2-Fluorophenol	61		25-120
Phenol-d6	63		10-120
Nitrobenzene-d5	59		23-120
2-Fluorobiphenyl	62		30-120
2,4,6-Tribromophenol	61		19-120
4-Terphenyl-d14	66		18-120

Project Name: BORDEN AVE.
Project Number: 29007

Lab Number: L0905825
Report Date: 05/12/09

Method Blank Analysis
Batch Quality Control

Analytical Method: 1,8270C
Analytical Date: 05/12/09 09:54
Analyst: PS
TCLP Extraction Date: 05/08/09 18:00

Extraction Method: EPA 3510C
Extraction Date: 05/11/09 11:25

Parameter	Result	Qualifier	Units	RDL
TCLP Semivolatiles by EPA 1311 - Westborough Lab for sample(s): 01 Batch: WG361989-1				
Hexachlorobenzene	ND		ug/l	25
2,4-Dinitrotoluene	ND		ug/l	30
Hexachlorobutadiene	ND		ug/l	50
Hexachloroethane	ND		ug/l	25
Nitrobenzene	ND		ug/l	25
2,4,6-Trichlorophenol	ND		ug/l	25
Pentachlorophenol	ND		ug/l	50
2-Methylphenol	ND		ug/l	30
3-Methylphenol/4-Methylphenol	ND		ug/l	30
2,4,5-Trichlorophenol	ND		ug/l	25
Pyridine	ND		ug/l	250

Surrogate	%Recovery	Qualifier	Acceptance Criteria
2-Fluorophenol	76		21-120
Phenol-d6	74		10-120
Nitrobenzene-d5	74		23-120
2-Fluorobiphenyl	79		43-120
2,4,6-Tribromophenol	90		10-120
4-Terphenyl-d14	93		33-120

Lab Control Sample Analysis
Batch Quality Control

Project Name: BORDEN AVE.
Project Number: 29007

Lab Number: L0905825
Report Date: 05/12/09

Parameter	LCS %Recovery	LCSD %Recovery	%Recovery Limits	RPD	RPD Limits
Semivolatile Organics by GC/MS - Westborough Lab Associated sample(s): 01 Batch: WG361726-2 WG361726-3					
Acenaphthene	76	75	31-137	1	50
1,2,4-Trichlorobenzene	68	67	38-107	1	50
2-Chloronaphthalene	73	72	40-140	1	50
1,2-Dichlorobenzene	74	62	40-140	18	50
1,4-Dichlorobenzene	68	61	28-104	11	50
2,4-Dinitrotoluene	78	78	28-89	0	50
2,6-Dinitrotoluene	66	70	40-140	6	50
Fluoranthene	88	90	40-140	2	50
4-Chlorophenyl phenyl ether	82	78	40-140	5	50
n-Nitrosodi-n-propylamine	74	66	41-126	11	50
Butyl benzyl phthalate	80	87	40-140	8	50
Anthracene	88	88	40-140	0	50
Pyrene	85	85	35-142	0	50
P-Chloro-M-Cresol	76	80	26-103	5	50
2-Chlorophenol	73	64	25-102	13	50
2-Nitrophenol	68	65	30-130	5	50
4-Nitrophenol	76	78	11-114	3	50
2,4-Dinitrophenol	19	13	4-130	38	50
Pentachlorophenol	58	57	17-109	2	50
Phenol	76	65	26-90	16	50

Lab Control Sample Analysis

Batch Quality Control

Project Name: BORDEN AVE.
Project Number: 29007

Lab Number: L0905825
Report Date: 05/12/09

Parameter	LCS %Recovery	LCSD %Recovery	%Recovery Limits	RPD	RPD Limits

Semivolatile Organics by GC/MS - Westborough Lab Associated sample(s): 01 Batch: WG361726-2 WG361726-3

Surrogate	LCS %Recovery	Qualifier	LCSD %Recovery	Qualifier	Acceptance Criteria
2-Fluorophenol	69		60		25-120
Phenol-d6	71		61		10-120
Nitrobenzene-d5	68		59		23-120
2-Fluorobiphenyl	66		66		30-120
2,4,6-Tribromophenol	71		77		19-120
4-Terphenyl-d14	71		74		18-120

TCLP Semivolatiles by EPA 1311 - Westborough Lab Associated sample(s): 01 Batch: WG361989-2 WG361989-3

Hexachlorobenzene	90	94	71-100	4	30
2,4-Dinitrotoluene	82	88	64-99	7	30
Hexachlorobutadiene	60	72	10-100	18	30
Hexachloroethane	63	76	13-82	19	30
Nitrobenzene	70	78	41-101	11	30
2,4,6-Trichlorophenol	74	83	53-99	11	30
Pentachlorophenol	85	93	55-112	9	30
2-Methylphenol	66	77	45-84	15	30
3-Methylphenol/4-Methylphenol	65	78	47-86	18	30

Lab Control Sample Analysis

Batch Quality Control

Project Name: BORDEN AVE.
Project Number: 29007

Lab Number: L0905825
Report Date: 05/12/09

Parameter	LCS %Recovery	LCSD %Recovery	%Recovery Limits	RPD	RPD Limits
TCLP Semivolatiles by EPA 1311 - Westborough Lab Associated sample(s): 01 Batch: WG361989-2 WG361989-3					
2,4,5-Trichlorophenol	77	87	60-104	12	30
Pyridine	29	27	0-100	7	30

Surrogate	LCS %Recovery	Qualifier	LCSD %Recovery	Qualifier	Acceptance Criteria
2-Fluorophenol	75		82		21-120
Phenol-d6	73		79		10-120
Nitrobenzene-d5	75		82		23-120
2-Fluorobiphenyl	76		83		43-120
2,4,6-Tribromophenol	97		97		10-120
4-Terphenyl-d14	102		107		33-120

PETROLEUM HYDROCARBONS

Project Name: BORDEN AVE.
Project Number: 29007

Lab Number: L0905825
Report Date: 05/12/09

SAMPLE RESULTS

Lab ID:	L0905825-01	Date Collected:	05/07/09 12:10
Client ID:	S-1	Date Received:	05/07/09
Sample Location:	LIC, NY	Field Prep:	Not Specified
Matrix:	Soil	Extraction Method:	
Analytical Method:	1,8015B		
Analytical Date:	05/11/09 14:12		
Analyst:	RC		
Percent Solids:	67%		

Parameter	Result	Qualifier	Units	RDL	Dilution Factor
Gasoline Range Organics - Westborough Lab					
Gasoline Range Organics	170000		ug/kg	17000	4

Surrogate	% Recovery	Qualifier	Acceptance Criteria
1,1,1-Trifluorotoluene	90		70-130
4-Bromofluorobenzene	102		70-130

Project Name: BORDEN AVE. **Lab Number:** L0905825

Project Number: 29007 **Report Date:** 05/12/09

SAMPLE RESULTS

Lab ID:	L0905825-01	Date Collected:	05/07/09 12:10
Client ID:	S-1	Date Received:	05/07/09
Sample Location:	LIC, NY	Field Prep:	Not Specified
Matrix:	Soil	Extraction Method:	EPA 3540C
Analytical Method:	1,8015B(M)	Extraction Date:	05/08/09 09:20
Analytical Date:	05/11/09 15:35		
Analyst:	RT		
Percent Solids:	67%		

Parameter	Result	Qualifier	Units	RDL	Dilution Factor
Petroleum Hydrocarbon Quantitation - Westborough Lab					
TPH	12900000		ug/kg	2490000	50

Surrogate	% Recovery	Qualifier	Acceptance Criteria
o-Terphenyl	64		40-140

Project Name: BORDEN AVE.
Project Number: 29007

Lab Number: L0905825
Report Date: 05/12/09

Method Blank Analysis
Batch Quality Control

Analytical Method: 1,8015B(M)
Analytical Date: 05/11/09 12:39
Analyst: RT

Extraction Method: EPA 3540C
Extraction Date: 05/08/09 09:20

Parameter	Result	Qualifier	Units	RDL
Petroleum Hydrocarbon Quantitation - Westborough Lab for sample(s): 01 Batch: WG361750-1				
TPH	ND		ug/kg	33300

Surrogate	%Recovery	Qualifier	Acceptance Criteria
o-Terphenyl	83		40-140

Project Name: BORDEN AVE. **Lab Number:** L0905825

Project Number: 29007 **Report Date:** 05/12/09

Method Blank Analysis
Batch Quality Control

Analytical Method: 1,8015B
Analytical Date: 05/11/09 12:30
Analyst: RC

Parameter	Result	Qualifier	Units	RDL
Gasoline Range Organics - Westborough Lab for sample(s): 01 Batch: WG361980-3				
Gasoline Range Organics	ND		ug/kg	2500

Surrogate	%Recovery	Qualifier	Acceptance Criteria
1,1,1-Trifluorotoluene	95		70-130
4-Bromofluorobenzene	102		70-130

Lab Control Sample Analysis

Batch Quality Control

Project Name: BORDEN AVE.
Project Number: 29007

Lab Number: L0905825
Report Date: 05/12/09

Parameter	LCS %Recovery	LCSD %Recovery	%Recovery Limits	RPD	RPD Limits
Petroleum Hydrocarbon Quantitation - Westborough Lab Associated sample(s): 01 Batch: WG361750-2					
TPH	72	-	40-140	-	

Surrogate	LCS %Recovery	Qualifier	LCSD %Recovery	Qualifier	Acceptance Criteria
o-Terphenyl	86				40-140

Parameter	LCS %Recovery	LCSD %Recovery	%Recovery Limits	RPD	RPD Limits
Gasoline Range Organics - Westborough Lab Associated sample(s): 01 Batch: WG361980-1 WG361980-2					
Gasoline Range Organics	80	81	80-120	1	20

Surrogate	LCS %Recovery	Qualifier	LCSD %Recovery	Qualifier	Acceptance Criteria
1,1,1-Trifluorotoluene	95		98		70-130
4-Bromofluorobenzene	102		106		70-130

Matrix Spike Analysis
Batch Quality Control

Project Name: BORDEN AVE.
Project Number: 29007

Lab Number: L0905825
Report Date: 05/12/09

Parameter	Native Sample	MS Added	MS Found	MS %Recovery	MSD Found	MSD %Recovery	Recovery Limits	RPD	RPD Limits
Gasoline Range Organics - Westborough Lab Associated sample(s): 01			QC Batch ID: WG361980-5			QC Sample: L0905825-01		Client ID: S-1	
Gasoline Range Organics	170000	140000	320000	104	-	-	80-120	-	20

Surrogate	MS % Recovery	MS Qualifier	MSD % Recovery	MSD Qualifier	Acceptance Criteria
1,1,1-Trifluorotoluene	95				70-130
4-Bromofluorobenzene	103				70-130

Lab Duplicate Analysis
Batch Quality Control

Project Name: BORDEN AVE.
Project Number: 29007

Lab Number: L0905825
Report Date: 05/12/09

Parameter	Native Sample	Duplicate Sample	Units	RPD	RPD Limits
Petroleum Hydrocarbon Quantitation - Westborough Lab	Associated sample(s): 01	QC Batch ID: WG361750-3	QC Sample: L0905825-01	Client ID: S-1	
TPH	12900000	13800000	ug/kg	7	40

Surrogate	%Recovery	Qualifier	%Recovery	Qualifier	Acceptance Criteria
o-Terphenyl	64		74		40-140

Lab Duplicate Analysis
Batch Quality Control

Project Name: BORDEN AVE.
Project Number: 29007

Lab Number: L0905825
Report Date: 05/12/09

Parameter	Native Sample	Duplicate Sample	Units	RPD	RPD Limits
Gasoline Range Organics - Westborough Lab Associated sample(s): 01 QC Batch ID: WG361980-4 QC Sample: L0905825-01 Client ID: S-1					
Gasoline Range Organics	170000	160000	ug/kg	5	20

Surrogate	%Recovery	Qualifier	%Recovery	Qualifier	Acceptance Criteria
1,1,1-Trifluorotoluene	90		90		70-130
4-Bromofluorobenzene	102		92		70-130

PCBS

Project Name: BORDEN AVE.
Project Number: 29007

Lab Number: L0905825
Report Date: 05/12/09

SAMPLE RESULTS

Lab ID:	L0905825-01	Date Collected:	05/07/09 12:10
Client ID:	S-1	Date Received:	05/07/09
Sample Location:	LIC, NY	Field Prep:	Not Specified
Matrix:	Soil	Extraction Method:	EPA 3540C
Analytical Method:	1,8082	Extraction Date:	05/08/09 04:00
Analytical Date:	05/12/09 14:30	Cleanup Method1:	EPA 3665A
Analyst:	SH	Cleanup Date1:	05/11/09
Percent Solids:	67%	Cleanup Method2:	EPA 3660B
		Cleanup Date2:	05/11/09

Parameter	Result	Qualifier	Units	RDL	Dilution Factor
Polychlorinated Biphenyls by GC - Westborough Lab					
Aroclor 1016	ND		ug/kg	498	10
Aroclor 1221	ND		ug/kg	498	10
Aroclor 1232	ND		ug/kg	498	10
Aroclor 1242	ND		ug/kg	498	10
Aroclor 1248	ND		ug/kg	498	10

Surrogate	% Recovery	Qualifier	Acceptance Criteria	Column
2,4,5,6-Tetrachloro-m-xylene	0		30-150	A
Decachlorobiphenyl	0		30-150	A
2,4,5,6-Tetrachloro-m-xylene	0		30-150	B
Decachlorobiphenyl	0		30-150	B

Project Name: BORDEN AVE. **Lab Number:** L0905825

Project Number: 29007 **Report Date:** 05/12/09

SAMPLE RESULTS

Lab ID:	L0905825-01	Date Collected:	05/07/09 12:10
Client ID:	S-1	Date Received:	05/07/09
Sample Location:	LIC, NY	Field Prep:	Not Specified
Matrix:	Soil	Extraction Method:	EPA 3540C
Analytical Method:	1,8082	Extraction Date:	05/08/09 04:00
Analytical Date:	05/12/09 14:30	Cleanup Method1:	EPA 3665A
Analyst:	SH	Cleanup Date1:	05/11/09
Percent Solids:	67%	Cleanup Method2:	EPA 3660B
		Cleanup Date2:	05/11/09

Parameter	Result	Qualifier	Units	RDL	Dilution Factor
Polychlorinated Biphenyls by GC - Westborough Lab					
Aroclor 1254	2150		ug/kg	498	10
Aroclor 1260	1580		ug/kg	498	10

Surrogate	% Recovery	Qualifier	Acceptance Criteria	Column
2,4,5,6-Tetrachloro-m-xylene	0		30-150	A
Decachlorobiphenyl	0		30-150	A
2,4,5,6-Tetrachloro-m-xylene	0		30-150	B
Decachlorobiphenyl	0		30-150	B

Project Name: BORDEN AVE.
Project Number: 29007

Lab Number: L0905825
Report Date: 05/12/09

Method Blank Analysis
Batch Quality Control

Analytical Method: 1,8082
Analytical Date: 05/12/09 12:10
Analyst: SH

Extraction Method: EPA 3540C
Extraction Date: 05/08/09 04:00
Cleanup Method1: EPA 3665A
Cleanup Date1: 05/11/09
Cleanup Method2: EPA 3660B
Cleanup Date2: 05/11/09

Parameter	Result	Qualifier	Units	RDL
Polychlorinated Biphenyls by GC - Westborough Lab for sample(s): 01 Batch: WG361728-1				
Aroclor 1016	ND		ug/kg	33.3
Aroclor 1221	ND		ug/kg	33.3
Aroclor 1232	ND		ug/kg	33.3
Aroclor 1242	ND		ug/kg	33.3
Aroclor 1248	ND		ug/kg	33.3
Aroclor 1254	ND		ug/kg	33.3
Aroclor 1260	ND		ug/kg	33.3

Surrogate	%Recovery	Qualifier	Acceptance Criteria	Column
2,4,5,6-Tetrachloro-m-xylene	71		30-150	A
Decachlorobiphenyl	100		30-150	A
2,4,5,6-Tetrachloro-m-xylene	84		30-150	B
Decachlorobiphenyl	121		30-150	B

Lab Control Sample Analysis
Batch Quality Control

Project Name: BORDEN AVE.
Project Number: 29007

Lab Number: L0905825
Report Date: 05/12/09

Parameter	LCS %Recovery	LCSD %Recovery	%Recovery Limits	RPD	RPD Limits
Polychlorinated Biphenyls by GC - Westborough Lab Associated sample(s): 01 Batch: WG361728-2 WG361728-3					
Aroclor 1016	129	132	40-140	2	30
Aroclor 1260	100	104	40-140	4	30

Surrogate	LCS %Recovery	Qualifier	LCSD %Recovery	Qualifier	Acceptance Criteria	Column
2,4,5,6-Tetrachloro-m-xylene	73		78		30-150	A
Decachlorobiphenyl	101		96		30-150	A
2,4,5,6-Tetrachloro-m-xylene	92		93		30-150	B
Decachlorobiphenyl	126		127		30-150	B

PESTICIDES

Project Name: BORDEN AVE. **Lab Number:** L0905825

Project Number: 29007 **Report Date:** 05/12/09

SAMPLE RESULTS

Lab ID:	L0905825-01	Date Collected:	05/07/09 12:10
Client ID:	S-1	Date Received:	05/07/09
Sample Location:	LIC, NY	Field Prep:	Not Specified
Matrix:	Soil	Extraction Method:	EPA 3545
Analytical Method:	1,8081A	Extraction Date:	05/09/09 04:01
Analytical Date:	05/12/09 11:52	Cleanup Method1:	EPA 3620B
Analyst:	JB	Cleanup Date1:	05/11/09
Percent Solids:	67%		

Parameter	Result	Qualifier	Units	RDL	Dilution Factor
Organochlorine Pesticides by GC - Westborough Lab					
Delta-BHC	ND		ug/kg	99.5	20
Lindane	ND		ug/kg	99.5	20
Alpha-BHC	ND		ug/kg	99.5	20
Beta-BHC	ND		ug/kg	99.5	20
Heptachlor	ND		ug/kg	99.5	20
Aldrin	ND		ug/kg	99.5	20
Heptachlor epoxide	ND		ug/kg	99.5	20
Endrin	ND		ug/kg	99.5	20
Endrin ketone	ND		ug/kg	99.5	20
Dieldrin	ND		ug/kg	99.5	20
4,4'-DDE	ND		ug/kg	99.5	20
4,4'-DDD	ND		ug/kg	99.5	20
4,4'-DDT	ND		ug/kg	99.5	20
Endosulfan I	ND		ug/kg	99.5	20
Endosulfan II	ND		ug/kg	99.5	20
Endosulfan sulfate	ND		ug/kg	99.5	20
Methoxychlor	ND		ug/kg	398	20
trans-Chlordane	ND		ug/kg	99.5	20
Chlordane	ND		ug/kg	995	20

Surrogate	% Recovery	Qualifier	Acceptance Criteria	Column
2,4,5,6-Tetrachloro-m-xylene	115		30-150	A
Decachlorobiphenyl	135		30-150	A
2,4,5,6-Tetrachloro-m-xylene	120		30-150	B
Decachlorobiphenyl	**175**		30-150	B

Project Name: BORDEN AVE. **Lab Number:** L0905825

Project Number: 29007 **Report Date:** 05/12/09

SAMPLE RESULTS

Lab ID:	L0905825-01	Date Collected:	05/07/09 12:10
Client ID:	S-1	Date Received:	05/07/09
Sample Location:	LIC, NY	Field Prep:	Not Specified
Matrix:	Soil	Extraction Method:	EPA 3510C
Analytical Method:	1,8082/8081	Extraction Date:	05/11/09 10:10
Analytical Date:	05/12/09 10:19	Cleanup Method1:	EPA 3620B
Analyst:	JB	Cleanup Date1:	05/12/09
Percent Solids:	67%		
TCLP/SPLP Ext. Date	05/08/09 18:00		

Parameter	Result	Qualifier	Units	RDL	Dilution Factor
TCLP Pesticides by EPA 1311 - Westborough Lab					
Lindane	ND		ug/l	0.100	1
Heptachlor	ND		ug/l	0.100	1
Heptachlor epoxide	ND		ug/l	0.100	1
Endrin	ND		ug/l	0.200	1
Methoxychlor	ND		ug/l	1.00	1
Toxaphene	ND		ug/l	1.00	1
Chlordane	ND		ug/l	1.00	1

Surrogate	% Recovery	Qualifier	Acceptance Criteria	Column
2,4,5,6-Tetrachloro-m-xylene	88		30-150	A
Decachlorobiphenyl	30		30-150	A
2,4,5,6-Tetrachloro-m-xylene	88		30-150	B
Decachlorobiphenyl	31		30-150	B

Project Name: BORDEN AVE.
Project Number: 29007

Lab Number: L0905825
Report Date: 05/12/09

Method Blank Analysis
Batch Quality Control

Analytical Method: 1,8081A
Analytical Date: 05/11/09 12:20
Analyst: JB

Extraction Method: EPA 3545
Extraction Date: 05/09/09 04:01
Cleanup Method1: EPA 3620B
Cleanup Date1: 05/11/09

Parameter	Result	Qualifier	Units	RDL
Organochlorine Pesticides by GC - Westborough Lab for sample(s): 01 Batch: WG361889-1				
Delta-BHC	ND		ug/kg	3.33
Lindane	ND		ug/kg	3.33
Alpha-BHC	ND		ug/kg	3.33
Beta-BHC	ND		ug/kg	3.33
Heptachlor	ND		ug/kg	3.33
Aldrin	ND		ug/kg	3.33
Heptachlor epoxide	ND		ug/kg	3.33
Endrin	ND		ug/kg	3.33
Endrin ketone	ND		ug/kg	3.33
Dieldrin	ND		ug/kg	3.33
4,4'-DDE	ND		ug/kg	3.33
4,4'-DDD	ND		ug/kg	3.33
4,4'-DDT	ND		ug/kg	3.33
Endosulfan I	ND		ug/kg	3.33
Endosulfan II	ND		ug/kg	3.33
Endosulfan sulfate	ND		ug/kg	3.33
Methoxychlor	ND		ug/kg	13.3
trans-Chlordane	ND		ug/kg	3.33
Chlordane	ND		ug/kg	33.3

Surrogate	%Recovery	Qualifier	Acceptance Criteria	Column
2,4,5,6-Tetrachloro-m-xylene	69		30-150	A
Decachlorobiphenyl	63		30-150	A
2,4,5,6-Tetrachloro-m-xylene	51		30-150	B
Decachlorobiphenyl	57		30-150	B

Project Name: BORDEN AVE.
Project Number: 29007

Lab Number: L0905825
Report Date: 05/12/09

Method Blank Analysis
Batch Quality Control

Analytical Method: 1,8082/8081
Analytical Date: 05/12/09 09:39
Analyst: JB
TCLP Extraction Date: 05/08/09 18:00

Extraction Method: EPA 3510C
Extraction Date: 05/11/09 10:10
Cleanup Method1: EPA 3620B
Cleanup Date1: 05/12/09

Parameter	Result	Qualifier	Units	RDL
TCLP Pesticides by EPA 1311 - Westborough Lab for sample(s): 01 Batch: WG361975-1				
Lindane	ND		ug/l	0.100
Heptachlor	ND		ug/l	0.100
Heptachlor epoxide	ND		ug/l	0.100
Endrin	ND		ug/l	0.200
Methoxychlor	ND		ug/l	1.00
Toxaphene	ND		ug/l	1.00
Chlordane	ND		ug/l	1.00

Surrogate	%Recovery	Qualifier	Acceptance Criteria	Column
2,4,5,6-Tetrachloro-m-xylene	76		30-150	A
Decachlorobiphenyl	109		30-150	A
2,4,5,6-Tetrachloro-m-xylene	81		30-150	B
Decachlorobiphenyl	100		30-150	B

Lab Control Sample Analysis

Batch Quality Control

Project Name: BORDEN AVE.
Project Number: 29007

Lab Number: L0905825
Report Date: 05/12/09

Parameter	LCS %Recovery	LCSD %Recovery	%Recovery Limits	RPD	RPD Limits
Organochlorine Pesticides by GC - Westborough Lab Associated sample(s): 01 Batch: WG361889-2 WG361889-3					
Delta-BHC	36	88	30-150	84	30
Lindane	34	83	30-150	84	30
Alpha-BHC	32	81	30-150	87	30
Beta-BHC	33	74	30-150	77	30
Heptachlor	35	87	30-150	85	30
Aldrin	31	79	30-150	87	30
Heptachlor epoxide	37	91	30-150	84	30
Endrin	34	86	30-150	87	30
Endrin ketone	34	83	30-150	84	30
Dieldrin	33	85	30-150	88	30
4,4'-DDE	33	86	30-150	89	30
4,4'-DDD	35	89	30-150	87	30
4,4'-DDT	38	98	30-150	88	30
Endosulfan I	32	82	30-150	88	30
Endosulfan II	38	90	30-150	81	30
Endosulfan sulfate	35	82	30-150	80	30
Methoxychlor	46	110	30-150	82	30
trans-Chlordane	33	82	30-150	85	30

Lab Control Sample Analysis

Batch Quality Control

Project Name: BORDEN AVE.
Project Number: 29007

Lab Number: L0905825
Report Date: 05/12/09

Parameter	LCS %Recovery	LCSD %Recovery	%Recovery Limits	RPD	RPD Limits
Organochlorine Pesticides by GC - Westborough Lab Associated sample(s): 01 Batch: WG361889-2 WG361889-3					

Surrogate	LCS %Recovery	Qualifier	LCSD %Recovery	Qualifier	Acceptance Criteria	Column
2,4,5,6-Tetrachloro-m-xylene	45		80		30-150	A
Decachlorobiphenyl	47		88		30-150	A
2,4,5,6-Tetrachloro-m-xylene	34		60		30-150	B
Decachlorobiphenyl	37		62		30-150	B

TCLP Pesticides by EPA 1311 - Westborough Lab Associated sample(s): 01 Batch: WG361975-2 WG361975-3

Lindane	96	91	30-150	6	20
Heptachlor	101	94	30-150	7	20
Heptachlor epoxide	114	106	30-150	7	20
Endrin	106	99	30-150	7	20
Methoxychlor	119	113	30-150	5	20

Lab Control Sample Analysis

Batch Quality Control

Project Name: BORDEN AVE.
Project Number: 29007

Lab Number: L0905825
Report Date: 05/12/09

Parameter	LCS %Recovery	LCSD %Recovery	%Recovery Limits	RPD	RPD Limits

TCLP Pesticides by EPA 1311 - Westborough Lab Associated sample(s): 01 Batch: WG361975-2 WG361975-3

Surrogate	LCS %Recovery	Qualifier	LCSD %Recovery	Qualifier	Acceptance Criteria	Column
2,4,5,6-Tetrachloro-m-xylene	101		92		30-150	A
Decachlorobiphenyl	140		127		30-150	A
2,4,5,6-Tetrachloro-m-xylene	94		91		30-150	B
Decachlorobiphenyl	114		110		30-150	B

METALS

Project Name: BORDEN AVE.
Project Number: 29007
Lab Number: L0905825
Report Date: 05/12/09

SAMPLE RESULTS

Lab ID: L0905825-01
Client ID: S-1
Sample Location: LIC, NY
Matrix: Soil
Percent Solids: 67%

Date Collected: 05/07/09 12:10
Date Received: 05/07/09
Field Prep: Not Specified
TCLP/SPLP Ext. Date: 05/08/09 18:00

Parameter	Result	Qualifier	Units	RDL	Dilution Factor	Date Prepared	Date Analyzed	Prep Method	Analytical Method	Analyst
TCLP Metals by EPA 1311 - Westborough Lab										
Arsenic, TCLP	ND		mg/l	1.0	1	05/09/09 14:00	05/11/09 12:41	EPA 3015	1,6010B	AI
Barium, TCLP	0.78		mg/l	0.50	1	05/09/09 14:00	05/11/09 12:41	EPA 3015	1,6010B	AI
Cadmium, TCLP	ND		mg/l	0.10	1	05/09/09 14:00	05/11/09 12:41	EPA 3015	1,6010B	AI
Chromium, TCLP	ND		mg/l	0.20	1	05/09/09 14:00	05/11/09 12:41	EPA 3015	1,6010B	AI
Lead, TCLP	1.3		mg/l	0.50	1	05/09/09 14:00	05/11/09 12:41	EPA 3015	1,6010B	AI
Mercury, TCLP	ND		mg/l	0.0010	1	05/09/09 15:30	05/11/09 12:29	EPA 7470A	1,7470A	EZ
Selenium, TCLP	ND		mg/l	0.50	1	05/09/09 14:00	05/11/09 12:41	EPA 3015	1,6010B	AI
Silver, TCLP	ND		mg/l	0.10	1	05/11/09 13:30	05/12/09 10:46	EPA 3015	1,6010B	MG

Project Name: BORDEN AVE. **Lab Number:** L0905825

Project Number: 29007 **Report Date:** 05/12/09

SAMPLE RESULTS

Lab ID: L0905825-01 Date Collected: 05/07/09 12:10

Client ID: S-1 Date Received: 05/07/09

Sample Location: LIC, NY Field Prep: Not Specified

Matrix: Soil TCLP/SPLP Ext. Date:

Percent Solids: 67%

Parameter	Result	Qualifier	Units	RDL	Dilution Factor	Date Prepared	Date Analyzed	Prep Method	Analytical Method	Analyst
Total Metals - Westborough Lab										
Antimony, Total	8.9		mg/kg	3.0	1	05/09/09 11:10	05/11/09 13:58	EPA 3050B	1,6010B	MG
Arsenic, Total	37		mg/kg	0.60	1	05/09/09 11:10	05/11/09 13:58	EPA 3050B	1,6010B	MG
Barium, Total	340		mg/kg	0.60	1	05/09/09 11:10	05/11/09 13:58	EPA 3050B	1,6010B	MG
Beryllium, Total	0.56		mg/kg	0.30	1	05/09/09 11:10	05/11/09 13:58	EPA 3050B	1,6010B	MG
Cadmium, Total	15		mg/kg	0.60	1	05/09/09 11:10	05/11/09 13:58	EPA 3050B	1,6010B	MG
Chromium, Total	210		mg/kg	0.60	1	05/09/09 11:10	05/11/09 13:58	EPA 3050B	1,6010B	MG
Copper, Total	640		mg/kg	0.60	1	05/09/09 11:10	05/11/09 13:58	EPA 3050B	1,6010B	MG
Lead, Total	1500		mg/kg	3.0	1	05/09/09 11:10	05/11/09 13:58	EPA 3050B	1,6010B	MG
Mercury, Total	2.1		mg/kg	0.11	1	05/09/09 17:30	05/11/09 11:22	EPA 7471A	1,7471A	EZ
Nickel, Total	98		mg/kg	1.5	1	05/09/09 11:10	05/11/09 13:58	EPA 3050B	1,6010B	MG
Selenium, Total	2.7		mg/kg	1.2	1	05/09/09 11:10	05/11/09 13:58	EPA 3050B	1,6010B	MG
Silver, Total	5.4		mg/kg	0.60	1	05/09/09 11:10	05/11/09 13:58	EPA 3050B	1,6010B	MG
Thallium, Total	2.4		mg/kg	1.2	1	05/09/09 11:10	05/11/09 13:58	EPA 3050B	1,6010B	MG
Zinc, Total	1700		mg/kg	60	20	05/09/09 11:10	05/12/09 12:06	EPA 3050B	1,6010B	MG

Project Name: BORDEN AVE. **Lab Number:** L0905825

Project Number: 29007 **Report Date:** 05/12/09

Method Blank Analysis
Batch Quality Control

Parameter	Result	Qualifier	Units	RDL	Dilution Factor	Date Prepared	Date Analyzed	Analytical Method	Analyst
Total Metals - Westborough Lab for sample(s): 01 Batch: WG361905-1									
Antimony, Total	ND		mg/kg	2.0	1	05/09/09 11:10	05/11/09 13:39	1,6010B	MG
Arsenic, Total	ND		mg/kg	0.40	1	05/09/09 11:10	05/11/09 13:39	1,6010B	MG
Barium, Total	ND		mg/kg	0.40	1	05/09/09 11:10	05/11/09 13:39	1,6010B	MG
Beryllium, Total	ND		mg/kg	0.20	1	05/09/09 11:10	05/11/09 13:39	1,6010B	MG
Cadmium, Total	ND		mg/kg	0.40	1	05/09/09 11:10	05/11/09 13:39	1,6010B	MG
Chromium, Total	ND		mg/kg	0.40	1	05/09/09 11:10	05/11/09 13:39	1,6010B	MG
Copper, Total	ND		mg/kg	0.40	1	05/09/09 11:10	05/11/09 13:39	1,6010B	MG
Lead, Total	ND		mg/kg	2.0	1	05/09/09 11:10	05/11/09 13:39	1,6010B	MG
Nickel, Total	ND		mg/kg	1.0	1	05/09/09 11:10	05/11/09 13:39	1,6010B	MG
Selenium, Total	ND		mg/kg	0.80	1	05/09/09 11:10	05/11/09 13:39	1,6010B	MG
Silver, Total	ND		mg/kg	0.40	1	05/09/09 11:10	05/11/09 13:39	1,6010B	MG
Thallium, Total	ND		mg/kg	0.80	1	05/09/09 11:10	05/11/09 13:39	1,6010B	MG
Zinc, Total	ND		mg/kg	2.0	1	05/09/09 11:10	05/11/09 13:39	1,6010B	MG

Prep Information

Digestion Method: EPA 3050B

Parameter	Result	Qualifier	Units	RDL	Dilution Factor	Date Prepared	Date Analyzed	Analytical Method	Analyst
TCLP Metals by EPA 1311 - Westborough Lab for sample(s): 01 Batch: WG361923-1									
Mercury, TCLP	ND		mg/l	0.0010	1	05/09/09 15:30	05/11/09 12:25	1,7470A	EZ

Prep Information

Digestion Method: EPA 7470A

TCLP Extraction Date: 05/08/09 18:00

Parameter	Result	Qualifier	Units	RDL	Dilution Factor	Date Prepared	Date Analyzed	Analytical Method	Analyst
TCLP Metals by EPA 1311 - Westborough Lab for sample(s): 01 Batch: WG361925-1									
Arsenic, TCLP	ND		mg/l	1.0	1	05/09/09 14:00	05/11/09 12:35	1,6010B	AI
Barium, TCLP	ND		mg/l	0.50	1	05/09/09 14:00	05/11/09 12:35	1,6010B	AI
Cadmium, TCLP	ND		mg/l	0.10	1	05/09/09 14:00	05/11/09 12:35	1,6010B	AI
Chromium, TCLP	ND		mg/l	0.20	1	05/09/09 14:00	05/11/09 12:35	1,6010B	AI

Project Name: BORDEN AVE. **Lab Number:** L0905825

Project Number: 29007 **Report Date:** 05/12/09

Method Blank Analysis
Batch Quality Control

Lead, TCLP	ND	mg/l	0.50	1	05/09/09 14:00	05/11/09 12:35	1,6010B	Al
Selenium, TCLP	ND	mg/l	0.50	1	05/09/09 14:00	05/11/09 12:35	1,6010B	Al

Prep Information

Digestion Method: EPA 3015

TCLP Extraction Date: 05/08/09 18:00

Parameter	Result	Qualifier	Units	RDL	Dilution Factor	Date Prepared	Date Analyzed	Analytical Method	Analyst
Total Metals - Westborough Lab for sample(s): 01 Batch: WG361930-1									
Mercury, Total	ND		mg/kg	0.08	1	05/09/09 17:30	05/11/09 11:18	1,7471A	EZ

Prep Information

Digestion Method: EPA 7471A

Parameter	Result	Qualifier	Units	RDL	Dilution Factor	Date Prepared	Date Analyzed	Analytical Method	Analyst
TCLP Metals by EPA 1311 - Westborough Lab for sample(s): 01 Batch: WG362013-1									
Silver, TCLP	ND		mg/l	0.10	1	05/11/09 13:30	05/12/09 10:41	1,6010B	MG

Prep Information

Digestion Method: EPA 3015

TCLP Extraction Date: 05/08/09 18:00

Lab Control Sample Analysis
Batch Quality Control

Project Name: BORDEN AVE.
Project Number: 29007

Lab Number: L0905825
Report Date: 05/12/09

Parameter	LCS %Recovery	LCSD %Recovery	%Recovery Limits	RPD	RPD Limits
Total Metals - Westborough Lab Associated sample(s): 01 Batch: WG361905-2					
Antimony, Total	96	-	75-125	-	
Arsenic, Total	95	-	75-125	-	
Barium, Total	89	-	75-125	-	
Beryllium, Total	96	-	75-125	-	
Cadmium, Total	99	-	75-125	-	
Chromium, Total	97	-	75-125	-	
Copper, Total	91	-	75-125	-	
Lead, Total	94	-	75-125	-	
Nickel, Total	90	-	75-125	-	
Selenium, Total	95	-	75-125	-	
Silver, Total	88	-	75-125	-	
Thallium, Total	88	-	75-125	-	
Zinc, Total	96	-	75-125	-	
TCLP Metals by EPA 1311 - Westborough Lab Associated sample(s): 01 Batch: WG361923-2					
Mercury, TCLP	103	-	80-120	-	

Lab Control Sample Analysis

Batch Quality Control

Project Name: BORDEN AVE.
Project Number: 29007

Lab Number: L0905825
Report Date: 05/12/09

Parameter	LCS %Recovery	LCSD %Recovery	%Recovery Limits	RPD	RPD Limits
TCLP Metals by EPA 1311 - Westborough Lab Associated sample(s): 01 Batch: WG361925-2					
Arsenic, TCLP	110	-	75-125	-	20
Barium, TCLP	100	-	75-125	-	20
Cadmium, TCLP	110	-	75-125	-	20
Chromium, TCLP	100	-	75-125	-	20
Lead, TCLP	100	-	75-125	-	20
Selenium, TCLP	105	-	75-125	-	20
Total Metals - Westborough Lab Associated sample(s): 01 Batch: WG361930-2					
Mercury, Total	104	-	80-120	-	
TCLP Metals by EPA 1311 - Westborough Lab Associated sample(s): 01 Batch: WG362013-2					
Silver, TCLP	96	-	75-125	-	20

Matrix Spike Analysis
Batch Quality Control

Project Name: BORDEN AVE.
Project Number: 29007

Lab Number: L0905825
Report Date: 05/12/09

Parameter	Native Sample	MS Added	MS Found	MS %Recovery	MSD Found	MSD %Recovery	Recovery Limits	RPD	RPD Limits
Total Metals - Westborough Lab Associated sample(s): 01	QC Batch ID: WG361905-4		QC Sample: L0905843-02		Client ID: MS Sample				
Antimony, Total	ND	21.4	8.5	**40**	-	-	75-125	-	35
Arsenic, Total	2.0	5.12	7.2	101	-	-	75-125	-	35
Barium, Total	32	85.4	110	91	-	-	75-125	-	35
Beryllium, Total	0.60	2.14	2.5	89	-	-	75-125	-	35
Cadmium, Total	ND	2.18	2.0	92	-	-	75-125	-	35
Chromium, Total	16	8.54	22	**70**	-	-	75-125	-	35
Copper, Total	25	10.7	25	**0**	-	-	75-125	-	35
Lead, Total	40	21.8	46	**28**	-	-	75-125	-	35
Nickel, Total	11	21.4	29	84	-	-	75-125	-	35
Selenium, Total	ND	5.12	4.2	82	-	-	75-125	-	35
Silver, Total	ND	12.8	12	94	-	-	75-125	-	35
Thallium, Total	ND	5.12	5.5	107	-	-	75-125	-	35
Zinc, Total	180	21.4	70	**0**	-	-	75-125	-	35
TCLP Metals by EPA 1311 - Westborough Lab Associated sample(s): 01	QC Batch ID: WG361923-4		QC Sample: L0905825-01		Client ID: S-1				
Mercury, TCLP	ND	0.005	0.0054	108	-	-	70-130	-	20

Matrix Spike Analysis
Batch Quality Control

Project Name: BORDEN AVE.
Project Number: 29007

Lab Number: L0905825
Report Date: 05/12/09

Parameter	Native Sample	MS Added	MS Found	MS %Recovery	MSD Found	MSD %Recovery	Recovery Limits	RPD	RPD Limits
TCLP Metals by EPA 1311 - Westborough Lab Associated sample(s): 01	QC Batch ID: WG361925-4		QC Sample: L0905825-01		Client ID: S-1				
Arsenic, TCLP	ND	10	11	110	-	-	75-125	-	20
Barium, TCLP	0.78	100	100	99	-	-	75-125	-	20
Cadmium, TCLP	ND	10	11	110	-	-	75-125	-	20
Chromium, TCLP	ND	10	10	100	-	-	75-125	-	20
Lead, TCLP	1.3	10	11	97	-	-	75-125	-	20
Selenium, TCLP	ND	20	21	105	-	-	75-125	-	20
Total Metals - Westborough Lab Associated sample(s): 01	QC Batch ID: WG361930-4		QC Sample: L0905825-01		Client ID: S-1				
Mercury, Total	2.1	0.234	1.9	**0**	-	-	70-130	-	35
TCLP Metals by EPA 1311 - Westborough Lab Associated sample(s): 01	QC Batch ID: WG362013-4		QC Sample: L0905825-01		Client ID: S-1				
Silver, TCLP	ND	10	10	100	-	-	75-125	-	20

Lab Duplicate Analysis
Batch Quality Control

Project Name: BORDEN AVE.
Project Number: 29007

Lab Number: L0905825
Report Date: 05/12/09

Parameter	Native Sample	Duplicate Sample	Units	RPD	RPD Limits
Total Metals - Westborough Lab Associated sample(s): 01 QC Batch ID: WG361905-3 QC Sample: L0905843-02 Client ID: DUP Sample					
Arsenic, Total	2.0	2.4	mg/kg	18	35
Barium, Total	32	32	mg/kg	0	35
Cadmium, Total	ND	ND	mg/kg	NC	35
Chromium, Total	16	16	mg/kg	0	35
Lead, Total	40	27	mg/kg	**39**	35
Selenium, Total	ND	ND	mg/kg	NC	35
Silver, Total	ND	ND	mg/kg	NC	35
TCLP Metals by EPA 1311 - Westborough Lab Associated sample(s): 01 QC Batch ID: WG361923-3 QC Sample: L0905825-01 Client ID: S-1					
Mercury, TCLP	ND	ND	mg/l	NC	20
TCLP Metals by EPA 1311 - Westborough Lab Associated sample(s): 01 QC Batch ID: WG361925-3 QC Sample: L0905825-01 Client ID: S-1					
Arsenic, TCLP	ND	ND	mg/l	NC	20
Barium, TCLP	0.78	0.76	mg/l	3	20
Cadmium, TCLP	ND	ND	mg/l	NC	20
Chromium, TCLP	ND	ND	mg/l	NC	20
Lead, TCLP	1.3	1.3	mg/l	0	20
Selenium, TCLP	ND	ND	mg/l	NC	20
Total Metals - Westborough Lab Associated sample(s): 01 QC Batch ID: WG361930-3 QC Sample: L0905825-01 Client ID: S-1					
Mercury, Total	2.1	4.4	mg/kg	**71**	35

Lab Duplicate Analysis
Batch Quality Control

Project Name: BORDEN AVE.
Project Number: 29007

Lab Number: L0905825
Report Date: 05/12/09

Parameter	Native Sample	Duplicate Sample	Units	RPD	RPD Limits
TCLP Metals by EPA 1311 - Westborough Lab Associated sample(s): 01 QC Batch ID: WG362013-3 QC Sample: L0905825-01 Client ID: S-1					
Silver, TCLP	ND	ND	mg/l	NC	20

INORGANICS
&
MISCELLANEOUS

Project Name: BORDEN AVE.
Project Number: 29007

Lab Number: L0905825
Report Date: 05/12/09

SAMPLE RESULTS

Lab ID: L0905825-01
Client ID: S-1
Sample Location: LIC, NY
Matrix: Soil

Date Collected: 05/07/09 12:10
Date Received: 05/07/09
Field Prep: Not Specified

Test Material Information

Source of Material: Unknown
Description of Material: Non-Metallic - Wet Soil
Particle Size: Coarse
Preliminary Burning Time (sec): 120

Parameter	Result	Date Analyzed	Analytical Method	Analyst
Ignitability of Solids - Westborough Lab				
Ignitability	NI	05/08/09 14:50	1,1030	TH

Project Name: BORDEN AVE.
Project Number: 29007

Lab Number: L0905825
Report Date: 05/12/09

SAMPLE RESULTS

Lab ID: L0905825-01
Client ID: S-1
Sample Location: LIC, NY
Matrix: Soil

Date Collected: 05/07/09 12:10
Date Received: 05/07/09
Field Prep: Not Specified

Parameter	Result	Qualifier	Units	RDL	Dilution Factor	Date Prepared	Date Analyzed	Analytical Method	Analyst
General Chemistry - Westborough Lab									
Solids, Total	67		%	0.10	1	-	05/08/09 12:47	30,2540G	SD
pH	8.6		SU	-	1	-	05/08/09 18:50	1,9045C	BH
Cyanide, Reactive	ND		mg/kg	10	1	-	05/08/09 09:40	1,7.3	TH
Sulfide, Reactive	380		mg/kg	48	4.8	-	05/08/09 09:40	1,7.3	TH
Paint Filter Liquid	NEGATIVE		-	0	1	-	05/09/09 18:00	1,9095A	ST

Project Name: BORDEN AVE.
Project Number: 29007

Lab Number: L0905825
Report Date: 05/12/09

Method Blank Analysis
Batch Quality Control

Parameter	Result	Qualifier	Units	RDL	Dilution Factor	Date Prepared	Date Analyzed	Analytical Method	Analyst
General Chemistry - Westborough Lab for sample(s): 01 Batch: WG361784-1									
Sulfide, Reactive	ND		mg/kg	10	1	-	05/08/09 09:40	1,7.3	TH
General Chemistry - Westborough Lab for sample(s): 01 Batch: WG361785-1									
Cyanide, Reactive	ND		mg/kg	10	1	-	05/08/09 09:40	1,7.3	TH

Lab Control Sample Analysis

Batch Quality Control

Project Name: BORDEN AVE.
Project Number: 29007

Lab Number: L0905825
Report Date: 05/12/09

Parameter	LCS %Recovery	LCSD %Recovery	%Recovery Limits	RPD	RPD Limits
General Chemistry - Westborough Lab	Associated sample(s): 01	Batch: WG361784-2			
Sulfide, Reactive	74	-	60-125	-	40
General Chemistry - Westborough Lab	Associated sample(s): 01	Batch: WG361785-2			
Cyanide, Reactive	61	-	30-125	-	40
General Chemistry - Westborough Lab	Associated sample(s): 01	Batch: WG361865-1			
pH	101	-		-	

Lab Duplicate Analysis
Batch Quality Control

Project Name: BORDEN AVE.
Project Number: 29007

Lab Number: L0905825
Report Date: 05/12/09

Parameter	Native Sample	Duplicate Sample	Units	RPD	RPD Limits
General Chemistry - Westborough Lab Associated sample(s): 01 QC Batch ID: WG361784-3 QC Sample: L0905713-01 Client ID: DUP Sample					
Sulfide, Reactive	ND	ND	mg/kg	NC	40
General Chemistry - Westborough Lab Associated sample(s): 01 QC Batch ID: WG361785-3 QC Sample: L0905713-01 Client ID: DUP Sample					
Cyanide, Reactive	ND	ND	mg/kg	NC	40
General Chemistry - Westborough Lab Associated sample(s): 01 QC Batch ID: WG361794-1 QC Sample: L0905603-04 Client ID: DUP Sample					
Solids, Total	95	95	%	0	20
General Chemistry - Westborough Lab Associated sample(s): 01 QC Batch ID: WG361865-2 QC Sample: L0905816-01 Client ID: DUP Sample					
pH	8.0	8.0	SU	0	

Project Name: BORDEN AVE.
Project Number: 29007

Lab Number: L0905825
Report Date: 05/12/09

Sample Receipt and Container Information

Were project specific reporting limits specified? YES

Cooler Information

Cooler	Custody Seal
A	Absent

Container Information

Container ID	Container Type	Cooler	pH	Temp	Pres	Seal	Analysis
L0905825-01A	Vial Large unpreserved	A	N/A	2.9	Y	Absent	TPH-GRO(14),TCLP-EXT-ZHE(14),TCLP-VOA(14),NYTCL-8260(14)
L0905825-01B	Amber 250ml unpreserved	A	N/A	2.9	Y	Absent	IGNIT-1030(14),REACTS(14),TS(7),PH-9045(1),PAINTF(),REACTCN(14)
L0905825-01C	Amber 250ml unpreserved	A	N/A	2.9	Y	Absent	BE-TI(180),AS-TI(180),BA-TI(180),AG-TI(180),CR-TI(180),NI-TI(180),CU-TI(180),PB-TI(180),HG-T(28),CD-TI(180)
L0905825-01D	Amber 250ml unpreserved	A	N/A	2.9	Y	Absent	NYTCL-8270(14),NYTCL-8081(14),NYTCL-8082(14),TPH-DRO-D(14)
L0905825-01E	Amber 250ml unpreserved	A	N/A	2.9	Y	Absent	TCLP-8270(14),PEST-TCLP*(14)
L0905825-01X	Plastic 250ml HNO3 preserved spl	NA	NA		Y	Absent	CD-CI(180),AS-CI(180),BA-CI(180),HG-C(28),PB-CI(180),CR-CI(180),SE-CI(180),AG-CI(180)

*Hold days indicated by values in parentheses

Project Name:	BORDEN AVE.	**Lab Number:**	L0905825
Project Number:	29007	**Report Date:**	05/12/09

GLOSSARY

Acronyms

EPA	- Environmental Protection Agency.
LCS	- Laboratory Control Sample: A sample matrix, free from the analytes of interest, spiked with verified known amounts of analytes or a material containing known and verified amounts of analytes.
LCSD	- Laboratory Control Sample Duplicate: Refer to LCS.
MS	- Matrix Spike Sample: A sample prepared by adding a known mass of target analyte to a specified amount of matrix sample for which an independent estimate of target analyte concentration is available.
MSD	- Matrix Spike Sample Duplicate: Refer to MS.
NA	- Not Applicable.
NC	- Not Calculated: Term is utilized when one or more of the results utilized in the calculation are non-detect at the parameter's reporting unit.
ND	- Not detected at the reported detection limit for the sample.
NI	- Not Ignitable.
RDL	- Reported Detection Limit: The value at which an instrument can accurately measure an analyte at a specific concentration. The RDL includes any adjustments from dilutions, concentrations or moisture content, where applicable.
RPD	- Relative Percent Difference: The results from matrix and/or matrix spike duplicates are primarily designed to assess the precision of analytical results in a given matrix and are expressed as relative percent difference (RPD). Values which are less than five times the reporting limit for any individual parameter are evaluated by utilizing the absolute difference between the values; although the RPD value will be provided in the report.

Terms

Analytical Method: Both the document from which the method originates and the analytical reference method. (Example: EPA 8260B is shown as 1,8260B.) The codes for the reference method documents are provided in the References section of the Addendum.

Data Qualifiers

*	- The batch duplicate RPD exceeds the acceptance criteria. This flag is not applicable when the sample concentrations are less than 5x the RDL. (Metals only.)
A	- Spectra identified as "Aldol Condensation Product".
B	- The analyte was detected above the reporting limit in the associated method blank. Flag only applies to associated field samples that have detectable concentrations of the analyte.
D	- Concentration of analyte was quantified from diluted analysis. Flag only applies to field samples that have detectable concentrations of the analyte.
E	- Concentration of analyte exceeds the range of the calibration curve and/or linear range of the instrument.
H	- The analysis of pH was performed beyond the regulatory-required holding time of 15 minutes from the time of sample collection.
N	- The matrix spike recovery exceeds the acceptance criteria. This flag is not applicable when the sample concentration is greater than 4x the spike added. (Metals only.)
P	- The RPD between the results for the two columns exceeds the method-specified criteria.
R	- Analytical results are from sample re-analysis.
RE	- Analytical results are from sample re-extraction.
J	- Estimated value. This represents an estimated concentration for Tentatively Identified Compounds (TICs).

Report Format: Data Usability Report

Project Name:	BORDEN AVE.	**Lab Number:**	L0905825
Project Number:	29007	**Report Date:**	05/12/09

REFERENCES

1 Test Methods for Evaluating Solid Waste: Physical/Chemical Methods. EPA SW-846. Third Edition. Updates I - IIIA, 1997.

30 Standard Methods for the Examination of Water and Wastewater. APHA-AWWA-WPCF. 18th Edition. 1992.

LIMITATION OF LIABILITIES

Alpha Analytical performs services with reasonable care and diligence normal to the analytical testing laboratory industry. In the event of an error, the sole and exclusive responsibility of Alpha Woods Hole Labs shall be to re-perform the work at it's own expense. In no event shall Alpha Analytical be held liable for any incidental, consequential or special damages, including but not limited to, damages in any way connected with the use of, interpretation of, information or analysis provided by Alpha Woods Hole Labs.

We strongly urge our clients to comply with EPA protocol regarding sample volume, preservation, cooling, containers, sampling procedures, holding time and splitting of samples in the field.

Certificate/Approval Program Summary

Last revised February 18, 2009 - Westboro Facility

The following list includes only those analytes/methods for which certification/approval is currently held.
For a complete listing of analytes for the referenced methods, please contact your Alpha Customer Service Representative.

Connecticut Department of Public Health Certificate/Lab ID: PH-0574.

Drinking Water (Inorganic Parameters: Color, pH, Turbidity, Conductivity, Alkalinity, Chloride, Free Residual Chlorine, Fluoride, Calcium Hardness, Sulfate, Nitrate, Nitrite, Aluminum, Antimony, Arsenic, Barium, Beryllium, Cadmium, Calcium, Chromium, Copper, Iron, Lead, Magnesium, Manganese, Mercury, Molybdenum, Nickel, Potassium, Selenium, Silver, Sodium, Thallium, Vanadium, Zinc, Total Dissolved Solids, Total Organic Carbon, Total Cyanide, Perchlorate. Organic Parameters: Haloacetic Acids, Volatile Organics 524.2, Total Trihalomethanes 524.2, 1,2-Dibromo-3-chloropropane (DBCP), Ethylene Dibromide (EDB).)
Wastewater/Non-Potable Water (Inorganic Parameters: Color, pH, Conductivity, Acidity, Alkalinity, Chloride, Total Residual Chlorine, Fluoride, Total Hardness, Calcium Hardness, Silica, Sulfate, Sulfide, Ammonia, Kjeldahl Nitrogen, Nitrate, Nitrite, O-Phosphate, Total Phosphorus, Aluminum, Antimony, Arsenic, Barium, Beryllium, Boron, Cadmium, Calcium, Chromium, Hexavalent Chromium, Cobalt, Copper, Iron, Lead, Magnesium, Manganese, Mercury, Molybdenum, Nickel, Potassium, Selenium, Silver, Sodium, Strontium, Thallium, Tin, Titanium, Vanadium, Zinc, Total Residue (Solids), Total Dissolved Solids, Total Suspended Solids (non-filterable), BOD, CBOD, COD, TOC, Total Cyanide, Phenolics, Foaming Agents (MBAS), Bromide, Oil and Grease. Organic Parameters: PCBs, Organochlorine Pesticides, Technical Chlordane, Toxaphene, 2,4-D, 2,4,5-T, 2,4,5-TP(Silvex), Acid Extractables (Phenols), Benzidines, Phthalate Esters, Nitrosamines, Nitroaromatics & Isophorone, Polynuclear Aromatic Hydrocarbons, Haloethers, Chlorinated Hydrocarbons, Volatile Organics.)
Solid Waste/Soil (Inorganic Parameters: Lead in Paint, pH, Aluminum, Antimony, Arsenic, Barium, Beryllium, Boron, Cadmium, Calcium, Chromium, Hexavalent Chromium, Cobalt, Copper, Iron, Lead, Magnesium, Manganese, Mercury, Molybdenum, Nickel, Potassium, Selenium, Silver, Sodium, Thallium, Tin, Vanadium, Zinc, Total Cyanide, Ignitability, Phenolics, Corrosivity, TCLP Leach (1311), Reactivity. Organic Parameters: PCBs, Organochlorine Pesticides, Technical Chlordane, Toxaphene, Extractable Petroleum Hydrocarbons (ETPH), Dicamba, 2,4-D, 2,4,5-T, 2,4,5-TP(Silvex), Volatile Organics, Acid Extractables (Phenols), 3.3'-Dichlorobenzidine, Phthalates, Nitrosamines, Nitroaromatics & Cyclic Ketones, PAHs, Haloethers, Chlorinated Hydrocarbons.)

Maine Department of Human Services Certificate/Lab ID: MA0086.
Drinking Water (Inorganic Parameters: SM9215B, 9221E, 9222B, 9222D, 9223B, EPA 150.1, 180.1, 300.0, 353.2, SM2130B, 2320B, 4500Cl-D, 4500CN-C, 4500CN-E, 4500F-C, 4500H+B,4500NO3-F, EPA 200.7, EPA 200.8, 245.1. Organic Parameters: 504.1, 524.2, SM 6251B.)
Wastewater/Non-Potable Water (Inorganic Parameters: EPA 120.1, 1664A, 350.1, 351.1, 353.2, 410.4, 420.1, Lachat 10-107-06-1-B, SM2320B, 2340B, 2510B, 2540C, 2540D, 426C, 4500Cl-D, 4500Cl-E, 4500CN-C, 4500CN-E, 4500F-B, 4500F-C, 4500H+B, 4500Norg-B, 4500Norg-C, 4500NH3-B, 4500NH3-G, 4500NH3-H, 4500NO3-F, 4500P-B.5, 4500P-E, 5210B, 5220D, 5310C, EPA 200.7, 200.8, 245.1. Organic Parameters: 608, 624.)

Massachusetts Department of Environmental Protection Certificate/Lab ID: M-MA086.
Drinking Water
Inorganic Parameters: (EPA 200.8 for: Sb,As,Ba,Be,Cd,Cr,Cu,Pb,Ni,Se,Tl)
(EPA 200.7 for: Ba,Be,Ca,Cd,Cr,Cu,Na,Ni) 245.1, (300.0 for: Nitrate-N, Nitrite-N, Fluoride, Sulfate)
353.2 for: Nitrate-N, Nitrite-N; SM4500NO3-F, 4500F-C, 4500CN-CE, EPA 180.1, SM2130B, SM4500Cl-D, 2320B, SM2540C, EPA 150.1, SM4500H-B.
Organic Parameters: (EPA 524.2 for: Trihalomethanes, Volatile Organics)
(504.1 for: 1,2-Dibromoethane, 1,2-Dibromo-3-Chloropropane), SM6251B, 314.0.

Non-Potable Water
Inorganic Parameters:, (EPA 200.8 for: Al,Sb,As,Be,Cd,Cr,Cu,Pb,Mn,Ni,Se,Ag,Tl,Zn)
(EPA 200.7 for: Al,Sb,As,Be,Cd,Cr,Co,Cu,Fe,Pb,Mn,Mo,Ni,Se,Ag,Sr,Tl,Ti,V,Zn,Ca,Mg,Na,K)
245.1, SM4500H,B, EPA 120.1, SM2510B, 2540C, 2540B, 2320B, 4500CL-E, 4500F-BC, 426C, SM4500NH3-BH, (EPA 350.1 for: Ammonia-N), LACHAT 10-107-06-1-B for Nitrate-N, SM4500NO3-F, 353.2 for Nitrate-N, SM4500NH3-B,C-Titr, SM4500NH3-BC-NES, EPA 351.1, SM4500P-E, 4500P-B,E, 5220D, EPA 410.4, SM 5210B, 5310C, 4500CN-CE, 2540D, 4500CL-D, EPA 1664, SM14 510AC, EPA 420.1
Organic Parameters: (EPA 624 for Volatile Halocarbons, Volatile Aromatics)
(608 for: Chlordane, Aldrin, Dieldrin, DDD, DDE, DDT, Heptachlor, Heptachlor Epoxide, PCB-Water)
600/4-81-045-PCB-Oil

Massachusetts Department of Environmental Protection Certificate/Lab ID: M-MA086.
Drinking Water
Microbiology Parameters: SM9215B; MF-SM9222B; ENZ. SUB. SM9223; EC-SM9221E; MF-SM9222D; ENZ. SUB. SM9223;

New Hampshire Department of Environmental Services Certificate/Lab ID: 200307.
Drinking Water (Inorganic Parameters: SM6215B, 9222B, 9223B Colilert, EPA 200.7, 200.8, 245.2, 110.2, 120.1, 150.1, 300.0, 325.2, 314.0, SM4500CN-E, 4500H+B, 4500NO3-F, 2320B, 2510B, 2540C, 4500F-C, 5310C, 2120B, EPA 331.0. Organic Parameters: 504.1, 524.2, SM6251B.)
Non-Potable Water (Inorganic Parameters: SM9222D, 9221B, 9222B, 9221E-EC, EPA 200.7, 200.8, 245.1, 245.2, SW-846 6010B, 6020, 7196A, 7470A, SM3500-CR-D, EPA 120.1, 150.1, 300.0, 305.1, 310.1, 325.2, 340.2, 350.1, 350.2, 351.1, 353.2, 354.1, 365.2, 375.4, 376.2, 405.1, 415.1, 420.1, 425.1, 1664A, SW-846 9010, 9030, 9040B, EPA 160.1, 160.2, 160.3, SM426C, SM2310B, 2540B, 2540D, 4500H+B, 4500NH3-H, 4500NH3-E, 4500NO2-B, 4500P-E, 4500-S2-D, 5210B, 2320B, 2540C, 4500F-C, 5310C, 5540C, LACHAT 10-117-07-1-B, LACHAT 10-107-06-1-B, LACHAT 10-107-04-1-C, LACHAT 10-107-04-1-J, LACHAT 10-117-07-1-A, SM4500CL-E, LACHAT 10-204-00-1-A, LACHAT 10-107-06-2-D. Organic Parameters: SW-846 3005A, 3015A, 3510C, 5030B, 8021B, 8260B, 8270C, 8330, EPA 624, 625, 608, SW-846 8082, 8081A.)
Solid & Chemical Materials (Inorganic Parameters: SW-846 6010B, 7196A, 7471A, 7.3.3.2, 7.3.4.2, 1010, 1030, 9010, 9012A, 9014, 9030B, 9040, 9045C, 9050C, 1311, 3005A, 3050B, 3051A. Organic Parameters: SW-846 3540C, 3545, 3580A, 5030B, 5035, 8021B, 8260B, 8270C, 8330, 8151A, 8082, 8081A.)

New Jersey Department of Environmental Protection Certificate/Lab ID: MA935.
Drinking Water (Inorganic Parameters: SM9222B, 9221E, 9223B, 9215B, 4500NO3-F, 4500F-C, EPA 300.0, 200.7, 2540C, 2320B, 314.0, 331.0, 110.2, SM2120B, 2510B, 5310C, EPA 150.1, SM4500H-B, EPA 200.8, 245.2. Organic Parameters: 504.1, SM6251B, 524.2.)
Non-Potable Water (Inorganic Parameters: SM5210B, EPA 410.1, SM5220D, 4500Cl-D, EPA 300.0, SM2120B, SM4500F-BC, EPA 200.7, 351.1, LACHAT 10-107-06-2-D, EPA 353.2, SM4500NO3-F, 4500NO2-B, EPA 1664A, SM5310B, C or D, 4500-PE, EPA 420.1, SM4500P-B5+E, 2540B, 2540C, 2540D, EPA 120.1, SM2510B, SM15 426C, SM9221CE, 9222D, 9221B, 9222B, 9215B, 2310B, 2320B, 4500NH3-H, EPA 350.2/.1, SM5210B, SW-846 3015, 6020, 7470A, 5540C, 4500H-B, EPA 200.8, SM3500Cr-D, EPA 245.1, 245.2, SW-846 9040B, 3005A, EPA 6010B, 7196A, SW-846 9010B, 9030B. Organic Parameters: SW-846 8260B, 8270C, 3510C, EPA 608, 624, 625, SW-846 5030B, 8021B, 8081A, 8082, 8151A, 8330.)
Solid & Chemical Materials (Inorganic Parameters: SW-846 9040B, 3005A, 6010B, 7196A, 5030B, 9010B, 9030B, 1030, 1311, 3050B, 3051, 7471A, 9014, 9012A, 9045C, 9050A, 9065. Organic Parameters: SW-846 8021B, 8081A, 8082, 8151A, 8330, 8260B, 8270C, 1311, 3540C, 3545, 3550B, 3580A, 5035L, 5035H.)

New York Department of Health Certificate/Lab ID: 11148.
Drinking Water (Inorganic Parameters: SM9223B, 9222B, 8215B, EPA 200.8, 200.7, 245.2, SM5310C, EPA 314.0, 331.0, SM2320B, EPA 300.0, 325.2, 110.2, SM2120B, 4500CN-E, 4500F-C, EPA 150.1, SM4500H-B, 4500NO3-F, 2540C, EPA 120.1, SM 2510B. Organic Parameters: EPA 524.2, 504.1, SM6251B.)
Non-Potable Water (Inorganic Parameters: SM9221E, 9222D, 9221B, 9222B, 9215B, EPA 405.1, SM5210B, EPA 410.4, SM5220D, EPA 305.1, SM2310B-4a, EPA 310.1, SM2320B, EPA 200.7, 300.0, 325.2, LACHAT 10-117-07-1A or B, SM4500Cl-E, EPA 340.2, SM4500F-C, EPA 375.4, SM15 426C, EPA 350.1, 350.2, LACHAT 10-107-06-1-B, SM4500NH3-H, EPA 351.1, LACHAT 10-107-06-2, EPA 353.2, LACHAT 10-107-041-C, SM4500-NO30F, EPA 354.1, SM4500-NO2-B, EPA 365.2, SM4500P-E, EPA 160.3, SM2540B, EPA 160.1, SM2540C, EPA 160.2, SM2540D, EPA 200.8, EPA 6010B, 6020, EPA 7196A, S\M3500Cr-D, EPA 245.1, 245.2, 7470A, 110.2, SM2120B, 335.2, LACHAT 10-204-00-1-A, EPA 150.1, 9040B, SM4500-HB, EPA 1664A, EPA 415.1, SM5310C, EPA 420.1, SM14 510C, EPA 120.1, SM2510B, EPA 376.2, SM4500S-D, EPA 425.1, SM5540C, EPA 3005A, 3015. Organic Parameters: EPA 624, 8260B, 8270C, 625, 608, 8081A, 8151A, 8330, 8082, 8021B, EPA 3510C, 5030B, 9010B, 9030B.)
Solid & Hazardous Waste (Inorganic Parameters: EPA 9040B, 9045C, 1010, 1030, SW-846 Ch 7 Sec 7.3, EPA 6010B, 7196A, 7471A, 9012A, 9014, 9040B, 9045C, 9065, 9050, EPA 1311, 3005A, 3050B, 3051, 9010B, 9030B. Organic Parameters: EPA 8260B, 8270C, 8081A, 8151A, 8330, 8082, 8021B, 3540C, 3545, 3580, 5030B, 5035.)
Analytical Services Protocol: CLP Volatile Organics, CLP Inorganics, CLP PCB/Pesticides.

Rhode Island Department of Health Certificate/Lab ID: LAO00065.
Refer to MA-DEP Certificate for Potable and Non-Potable Water.
Refer to NY-DOH Certificate for Potable and Non-Potable Water.

Pennsylvania Department of Environmental Protection Certificate/Lab ID : 68-03671. Registered Laboratory.

05120919:10

CHAIN OF CUSTODY

PAGE 1 OF 1

Date Rec'd in Lab: 5/7/09

ALPHA Job #: L0905125

ALPHA Analytical
WESTBORO, MA TEL: 508-898-9220 FAX: 508-898-9193
MANSFIELD, MA TEL: 508-822-9300 FAX: 508-822-3288

Client Information

Client: EPM, Inc.
Address: 1983 Marcus Ave
Lake Success, NY
Phone: 516-328-1194
Fax: 516-328-1381
Email: rhart@epmco.com

☐ These samples have been previously analyzed by Alpha

Project Information

Project Name: Borden Ave.
Project Location: LIC, NY
Project #: 29007
Project Manager: Rich Hart
ALPHA Quote #:

Turn-Around Time

☐ Standard ☑ RUSH (only confirmed if pre-approved)
Date Due: 5/12/09 Time:

Other Project Specific Requirements/Comments/Detection Limits:

Report Information - Data Deliverables

☐ FAX ☑ EMAIL
☐ ADEx ☐ Add'l Deliverables

Billing Information

☑ Same as Client info PO #: 29007

Regulatory Requirements/Report Limits

State /Fed Program | Criteria

MA MCP PRESUMPTIVE CERTAINTY --- CT REASONABLE CONFIDENCE PROTO-

☐ Yes ☑ No Are MCP Analytical Methods Required?
☐ Yes ☑ No Are CT RCP (Reasonable Confidence Protocols) Required?

ALPHA Lab ID (Lab Use Only)	Sample ID	Collection Date	Collection Time	Sample Matrix	Sampler's Initials	ANALYSIS 8260 TCL VOCs +MTBE (8270)	TCL SVOCs (8270)	PCB 8082	PPL Metals	PPL Pests	TPH DRO/GRO (with silica gel)	TCLP VOC	TCLP SVOC	TCLP Pests	TCLP Herbs	RCRA Characteristics	Sample Specific Comments
05825-01	S-1	5/7/09	1210	S	DS	X	X	X	X	X	X	X	X	X	X	X	

SAMPLE HANDLING
Filtration
☐ Done ☐ Not needed ☐ Lab to do
Preservation
☐ Lab to do (Please specify below)

TOTAL # BOTTLES

PLEASE ANSWER QUESTIONS ABOVE!

IS YOUR PROJECT MA MCP or CT RCP?

Container Type
Preservative

Relinquished By:	Date/Time	Received By:	Date/Time
R. Hart	5/7/09		5/7/09 16:35
	5/7/09 0230 PM		5/7/09 18:57
	5/7/09 2030	Jessica MW	5/7/09 20:30

Please print clearly, legibly and completely. Samples can not be logged in and turnaround time clock will not start until any ambiguities are resolved. All samples submitted are subject to Alpha's Terms and Conditions. See reverse side.

FORM NO: 01-01 (rev. 14-OCT-07)

ALPHA ANALYTICAL

ANALYTICAL REPORT

Lab Number:	L0905830
Client:	Environmental Planning and Management 1983 Marcus Avenue Suite 109 Lake Success, NY 11042
ATTN:	Rick Hart
Project Name:	BORDEN AVE.
Project Number:	29007
Report Date:	05/14/09

Certifications & Approvals: MA (M-MA086), NY NELAC (11148), CT (PH-0574), NH (2003), NJ (MA935), RI (LAO00065), ME (MA0086), PA (Registration #68-03671), USDA (Permit #S-72578), US Army Corps of Engineers, Naval FESC.

Eight Walkup Drive, Westborough, MA 01581-1019
508-898-9220 (Fax) 508-898-9193 800-624-9220 - www.alphalab.com

Project Name: BORDEN AVE.
Project Number: 29007

Lab Number: L0905830
Report Date: 05/14/09

Alpha Sample ID	Client ID	Sample Location	Collection Date/Time
L0905830-01	S-1	LIC, NY	05/07/09 12:10

Project Name:	BORDEN AVE.	**Lab Number:**	L0905830
Project Number:	29007	**Report Date:**	05/14/09

Case Narrative

The samples were received in accordance with the Chain of Custody and no significant deviations were encountered during the preparation or analysis unless otherwise noted. Sample Receipt, Container Information, and the Chain of Custody are located at the back of the report.

Results contained within this report relate only to the samples submitted under this Alpha Lab Number and meet all of the requirements of NELAC, for all NELAC accredited parameters. The data presented in this report is organized by parameter (i.e. VOC, SVOC, etc.). Sample specific Quality Control data (i.e. Surrogate Spike Recovery) is reported at the end of the target analyte list for each individual sample, followed by the Laboratory Batch Quality Control at the end of each parameter. If a sample was re-analyzed or re-extracted due to a required quality control corrective action and if both sets of data are reported, the Laboratory ID of the re-analysis or re-extraction is designated with an "R" or "RE", respectively. When multiple Batch Quality Control elements are reported (e.g. more than one LCS), the associated samples for each element are noted in the grey shaded header line of each data table. Any Laboratory Batch, Sample Specific % recovery or RPD value that is outside the listed Acceptance Criteria is bolded in the report.

Please see the associated ADEx data file for a comparison of laboratory reporting limits that were achieved with the regulatory Numerical Standards requested on the Chain of Custody.

For additional information, please contact Client Services at 800-624-9220.

Report Submission

This report contains the results for the TCLP Herbicide analysis. The results for all other analyses will be issued under separate cover.

I, the undersigned, attest under the pains and penalties of perjury that, to the best of my knowledge and belief and based upon my personal inquiry of those responsible for providing the information contained in this analytical report, such information is accurate and complete. This certificate of analysis is not complete unless this page accompanies any and all pages of this report.

Authorized Signature: Michelle M. Morris

Title: Technical Director/Representative Date: 05/14/09

ORGANICS

PESTICIDES

Project Name: BORDEN AVE.
Project Number: 29007

Lab Number: L0905830
Report Date: 05/14/09

SAMPLE RESULTS

Lab ID: L0905830-01
Client ID: S-1
Sample Location: LIC, NY
Matrix: Soil
Analytical Method: 1,8151A
Analytical Date: 05/13/09 11:11
Analyst: JB

TCLP/SPLP Ext. Date 05/08/09 18:00

Date Collected: 05/07/09 12:10
Date Received: 05/07/09
Field Prep: Not Specified
Extraction Method: EPA 3510C
Extraction Date: 05/11/09 09:20

Parameter	Result	Qualifier	Units	RDL	Dilution Factor
TCLP Herbicides by EPA 1311 - Westborough Lab					
2,4-D	ND		mg/l	0.025	1
2,4,5-TP (Silvex)	ND		mg/l	0.003	1

Surrogate	% Recovery	Qualifier	Acceptance Criteria	Column
DCAA	67		30-150	A
DCAA	73		30-150	B

Project Name: BORDEN AVE.
Project Number: 29007

Lab Number: L0905830
Report Date: 05/14/09

Method Blank Analysis
Batch Quality Control

Analytical Method: 1,8151A
Analytical Date: 05/13/09 10:12
Analyst: JB
TCLP Extraction Date: 05/08/09 18:00

Extraction Method: EPA 3510C
Extraction Date: 05/11/09 09:20

Parameter	Result	Qualifier	Units	RDL
TCLP Herbicides by EPA 1311 - Westborough Lab for sample(s): 01 Batch: WG361969-1				
2,4-D	ND		mg/l	0.025
2,4,5-TP (Silvex)	ND		mg/l	0.003

Surrogate	%Recovery	Qualifier	Acceptance Criteria	Column
DCAA	84		30-150	A
DCAA	88		30-150	B

Lab Control Sample Analysis

Batch Quality Control

Project Name: BORDEN AVE.
Project Number: 29007

Lab Number: L0905830
Report Date: 05/14/09

Parameter	LCS %Recovery	LCSD %Recovery	%Recovery Limits	RPD	RPD Limits
TCLP Herbicides by EPA 1311 - Westborough Lab Associated sample(s): 01 Batch: WG361969-2 WG361969-3					
2,4-D	96	92	30-150	4	25
2,4,5-TP (Silvex)	57	51	30-150	11	25

Surrogate	LCS %Recovery	Qualifier	LCSD %Recovery	Qualifier	Acceptance Criteria	Column
DCAA	75		67		30-150	A
DCAA	79		71		30-150	B

Project Name: BORDEN AVE.
Project Number: 29007

Lab Number: L0905830
Report Date: 05/14/09

Sample Receipt and Container Information

Were project specific reporting limits specified? YES

Cooler Information

Cooler	Custody Seal
A	Absent

Container Information

Container ID	Container Type	Cooler	pH	Temp	Pres	Seal	Analysis
L0905830-01A	Amber 250ml unpreserved	A	N/A	2.9	Y	Absent	HERB-TCLP*(14)

*Hold days indicated by values in parentheses

Project Name:	BORDEN AVE.	**Lab Number:**	L0905830
Project Number:	29007	**Report Date:**	05/14/09

GLOSSARY

Acronyms

EPA	- Environmental Protection Agency.
LCS	- Laboratory Control Sample: A sample matrix, free from the analytes of interest, spiked with verified known amounts of analytes or a material containing known and verified amounts of analytes.
LCSD	- Laboratory Control Sample Duplicate: Refer to LCS.
MS	- Matrix Spike Sample: A sample prepared by adding a known mass of target analyte to a specified amount of matrix sample for which an independent estimate of target analyte concentration is available.
MSD	- Matrix Spike Sample Duplicate: Refer to MS.
NA	- Not Applicable.
NC	- Not Calculated: Term is utilized when one or more of the results utilized in the calculation are non-detect at the parameter's reporting unit.
ND	- Not detected at the reported detection limit for the sample.
NI	- Not Ignitable.
RDL	- Reported Detection Limit: The value at which an instrument can accurately measure an analyte at a specific concentration. The RDL includes any adjustments from dilutions, concentrations or moisture content, where applicable.
RPD	- Relative Percent Difference: The results from matrix and/or matrix spike duplicates are primarily designed to assess the precision of analytical results in a given matrix and are expressed as relative percent difference (RPD). Values which are less than five times the reporting limit for any individual parameter are evaluated by utilizing the absolute difference between the values; although the RPD value will be provided in the report.

Terms

Analytical Method: Both the document from which the method originates and the analytical reference method. (Example: EPA 8260B is shown as 1,8260B.) The codes for the reference method documents are provided in the References section of the Addendum.

Data Qualifiers

*	- The batch duplicate RPD exceeds the acceptance criteria. This flag is not applicable when the sample concentrations are less than 5x the RDL. (Metals only.)
A	- Spectra identified as "Aldol Condensation Product".
B	- The analyte was detected above the reporting limit in the associated method blank. Flag only applies to associated field samples that have detectable concentrations of the analyte.
D	- Concentration of analyte was quantified from diluted analysis. Flag only applies to field samples that have detectable concentrations of the analyte.
E	- Concentration of analyte exceeds the range of the calibration curve and/or linear range of the instrument.
H	- The analysis of pH was performed beyond the regulatory-required holding time of 15 minutes from the time of sample collection.
N	- The matrix spike recovery exceeds the acceptance criteria. This flag is not applicable when the sample concentration is greater than 4x the spike added. (Metals only.)
P	- The RPD between the results for the two columns exceeds the method-specified criteria.
R	- Analytical results are from sample re-analysis.
RE	- Analytical results are from sample re-extraction.
J	- Estimated value. This represents an estimated concentration for Tentatively Identified Compounds (TICs).

Report Format: Data Usability Report

Project Name:	BORDEN AVE.	**Lab Number:**	L0905830
Project Number:	29007	**Report Date:**	05/14/09

REFERENCES

1 Test Methods for Evaluating Solid Waste: Physical/Chemical Methods. EPA SW-846. Third Edition. Updates I - IIIA, 1997.

LIMITATION OF LIABILITIES

Alpha Analytical performs services with reasonable care and diligence normal to the analytical testing laboratory industry. In the event of an error, the sole and exclusive responsibility of Alpha Woods Hole Labs shall be to re-perform the work at it's own expense. In no event shall Alpha Analytical be held liable for any incidental, consequential or special damages, including but not limited to, damages in any way connected with the use of, interpretation of, information or analysis provided by Alpha Woods Hole Labs.

We strongly urge our clients to comply with EPA protocol regarding sample volume, preservation, cooling, containers, sampling procedures, holding time and splitting of samples in the field.

Certificate/Approval Program Summary

Last revised February 18, 2009 - Westboro Facility

The following list includes only those analytes/methods for which certification/approval is currently held.
For a complete listing of analytes for the referenced methods, please contact your Alpha Customer Service Representative.

Connecticut Department of Public Health Certificate/Lab ID: PH-0574.

Drinking Water (Inorganic Parameters: Color, pH, Turbidity, Conductivity, Alkalinity, Chloride, Free Residual Chlorine, Fluoride, Calcium Hardness, Sulfate, Nitrate, Nitrite, Aluminum, Antimony, Arsenic, Barium, Beryllium, Cadmium, Calcium, Chromium, Copper, Iron, Lead, Magnesium, Manganese, Mercury, Molybdenum, Nickel, Potassium, Selenium, Silver, Sodium, Thallium, Vanadium, Zinc, Total Dissolved Solids, Total Organic Carbon, Total Cyanide, Perchlorate. Organic Parameters: Haloacetic Acids, Volatile Organics 524.2, Total Trihalomethanes 524.2, 1,2-Dibromo-3-chloropropane (DBCP), Ethylene Dibromide (EDB).)
Wastewater/Non-Potable Water (Inorganic Parameters: Color, pH, Conductivity, Acidity, Alkalinity, Chloride, Total Residual Chlorine, Fluoride, Total Hardness, Calcium Hardness, Silica, Sulfate, Sulfide, Ammonia, Kjeldahl Nitrogen, Nitrate, Nitrite, O-Phosphate, Total Phosphorus, Aluminum, Antimony, Arsenic, Barium, Beryllium, Boron, Cadmium, Calcium, Chromium, Hexavalent Chromium, Cobalt, Copper, Iron, Lead, Magnesium, Manganese, Mercury, Molybdenum, Nickel, Potassium, Selenium, Silver, Sodium, Strontium, Thallium, Tin, Titanium, Vanadium, Zinc, Total Residue (Solids), Total Dissolved Solids, Total Suspended Solids (non-filterable), BOD, CBOD, COD, TOC, Total Cyanide, Phenolics, Foaming Agents (MBAS), Bromide, Oil and Grease. Organic Parameters: PCBs, Organochlorine Pesticides, Technical Chlordane, Toxaphene, 2,4-D, 2,4,5-T, 2,4,5-TP(Silvex), Acid Extractables (Phenols), Benzidines, Phthalate Esters, Nitrosamines, Nitroaromatics & Isophorone, Polynuclear Aromatic Hydrocarbons, Haloethers, Chlorinated Hydrocarbons, Volatile Organics.)
Solid Waste/Soil (Inorganic Parameters: Lead in Paint, pH, Aluminum, Antimony, Arsenic, Barium, Beryllium, Boron, Cadmium, Calcium, Chromium, Hexavalent Chromium, Cobalt, Copper, Iron, Lead, Magnesium, Manganese, Mercury, Molybdenum, Nickel, Potassium, Selenium, Silver, Sodium, Thallium, Tin, Vanadium, Zinc, Total Cyanide, Ignitability, Phenolics, Corrosivity, TCLP Leach (1311), Reactivity. Organic Parameters: PCBs, Organochlorine Pesticides, Technical Chlordane, Toxaphene, Extractable Petroleum Hydrocarbons (ETPH), Dicamba, 2,4-D, 2,4,5-T, 2,4,5-TP(Silvex), Volatile Organics, Acid Extractables (Phenols), 3.3'-Dichlorobenzidine, Phthalates, Nitrosamines, Nitroaromatics & Cyclic Ketones, PAHs, Haloethers, Chlorinated Hydrocarbons.)

Maine Department of Human Services Certificate/Lab ID: MA0086.
Drinking Water (Inorganic Parameters: SM9215B, 9221E, 9222B, 9222D, 9223B, EPA 150.1, 180.1, 300.0, 353.2, SM2130B, 2320B, 4500Cl-D, 4500CN-C, 4500CN-E, 4500F-C, 4500H+B,4500NO3-F, EPA 200.7, EPA 200.8, 245.1. Organic Parameters: 504.1, 524.2, SM 6251B.)
Wastewater/Non-Potable Water (Inorganic Parameters: EPA 120.1, 1664A, 350.1, 351.1, 353.2, 410.4, 420.1, Lachat 10-107-06-1-B, SM2320B, 2340B, 2510B, 2540C, 2540D, 426C, 4500Cl-D, 4500Cl-E, 4500CN-C, 4500CN-E, 4500F-B, 4500F-C, 4500H+B, 4500Norg-B, 4500Norg-C, 4500NH3-B, 4500NH3-G, 4500NH3-H, 4500NO3-F, 4500P-B.5, 4500P-E, 5210B, 5220D, 5310C, EPA 200.7, 200.8, 245.1. Organic Parameters: 608, 624.)

Massachusetts Department of Environmental Protection Certificate/Lab ID: M-MA086.
Drinking Water
Inorganic Parameters: (EPA 200.8 for: Sb,As,Ba,Be,Cd,Cr,Cu,Pb,Ni,Se,Tl)
(EPA 200.7 for: Ba,Be,Ca,Cd,Cr,Cu,Na,Ni) 245.1, (300.0 for: Nitrate-N, Nitrite-N, Fluoride, Sulfate)
353.2 for: Nitrate-N, Nitrite-N; SM4500NO3-F, 4500F-C, 4500CN-CE, EPA 180.1, SM2130B, SM4500Cl-D, 2320B, SM2540C, EPA 150.1, SM4500H-B.
Organic Parameters: (EPA 524.2 for: Trihalomethanes, Volatile Organics)
(504.1 for: 1,2-Dibromoethane, 1,2-Dibromo-3-Chloropropane), SM6251B, 314.0.

Non-Potable Water
Inorganic Parameters:, (EPA 200.8 for: Al,Sb,As,Be,Cd,Cr,Cu,Pb,Mn,Ni,Se,Ag,Tl,Zn)
(EPA 200.7 for: Al,Sb,As,Be,Cd,Cr,Co,Cu,Fe,Pb,Mn,Mo,Ni,Se,Ag,Sr,Tl,Ti,V,Zn,Ca,Mg,Na,K)
245.1, SM4500H,B, EPA 120.1, SM2510B, 2540C, 2540B, 2320B, 4500CL-E, 4500F-BC, 426C, SM4500NH3-BH, (EPA 350.1 for: Ammonia-N), LACHAT 10-107-06-1-B for Nitrate-N, SM4500NO3-F, 353.2 for Nitrate-N, SM4500NH3-B,C-Titr, SM4500NH3-BC-NES, EPA 351.1, SM4500P-E, 4500P-B,E, 5220D, EPA 410.4, SM 5210B, 5310C, 4500CN-CE, 2540D, 4500CL-D, EPA 1664, SM14 510AC, EPA 420.1
Organic Parameters: (EPA 624 for Volatile Halocarbons, Volatile Aromatics)
(608 for: Chlordane, Aldrin, Dieldrin, DDD, DDE, DDT, Heptachlor, Heptachlor Epoxide, PCB-Water)
600/4-81-045-PCB-Oil

Massachusetts Department of Environmental Protection Certificate/Lab ID: M-MA086.
Drinking Water
Microbiology Parameters: SM9215B; MF-SM9222B; ENZ. SUB. SM9223; EC-SM9221E; MF-SM9222D; ENZ. SUB. SM9223;

New Hampshire Department of Environmental Services Certificate/Lab ID: 200307.
Drinking Water (Inorganic Parameters: SM6215B, 9222B, 9223B Colilert, EPA 200.7, 200.8, 245.2, 110.2, 120.1, 150.1, 300.0, 325.2, 314.0, SM4500CN-E, 4500H+B, 4500NO3-F, 2320B, 2510B, 2540C, 4500F-C, 5310C, 2120B, EPA 331.0. Organic Parameters: 504.1, 524.2, SM6251B.)
Non-Potable Water (Inorganic Parameters: SM9222D, 9221B, 9222B, 9221E-EC, EPA 200.7, 200.8, 245.1, 245.2, SW-846 6010B, 6020, 7196A, 7470A, SM3500-CR-D, EPA 120.1, 150.1, 300.0, 305.1, 310.1, 325.2, 340.2, 350.1, 350.2, 351.1, 353.2, 354.1, 365.2, 375.4, 376.2, 405.1, 415.1, 420.1, 425.1, 1664A, SW-846 9010, 9030, 9040B, EPA 160.1, 160.2, 160.3, SM426C, SM2310B, 2540B, 2540D, 4500H+B, 4500NH3-H, 4500NH3-E, 4500NO2-B, 4500P-E, 4500-S2-D, 5210B, 2320B, 2540C, 4500F-C, 5310C, 5540C, LACHAT 10-117-07-1-B, LACHAT 10-107-06-1-B, LACHAT 10-107-04-1-C, LACHAT 10-107-04-1-J, LACHAT 10-117-07-1-A, SM4500CL-E, LACHAT 10-204-00-1-A, LACHAT 10-107-06-2-D. Organic Parameters: SW-846 3005A, 3015A, 3510C, 5030B, 8021B, 8260B, 8270C, 8330, EPA 624, 625, 608, SW-846 8082, 8081A.)
Solid & Chemical Materials (Inorganic Parameters: SW-846 6010B, 7196A, 7471A, 7.3.3.2, 7.3.4.2, 1010, 1030, 9010, 9012A, 9014, 9030B, 9040, 9045C, 9050C, 1311, 3005A, 3050B, 3051A. Organic Parameters: SW-846 3540C, 3545, 3580A, 5030B, 5035, 8021B, 8260B, 8270C, 8330, 8151A, 8082, 8081A.)

New Jersey Department of Environmental Protection Certificate/Lab ID: MA935.
Drinking Water (Inorganic Parameters: SM9222B, 9221E, 9223B, 9215B, 4500NO3-F, 4500F-C, EPA 300.0, 200.7, 2540C, 2320B, 314.0, 331.0, 110.2, SM2120B, 2510B, 5310C, EPA 150.1, SM4500H-B, EPA 200.8, 245.2. Organic Parameters: 504.1, SM6251B, 524.2.)
Non-Potable Water (Inorganic Parameters: SM5210B, EPA 410.1, SM5220D, 4500Cl-D, EPA 300.0, SM2120B, SM4500F-BC, EPA 200.7, 351.1, LACHAT 10-107-06-2-D, EPA 353.2, SM4500NO3-F, 4500NO2-B, EPA 1664A, SM5310B, C or D, 4500-PE, EPA 420.1, SM4500P-B5+E, 2540B, 2540C, 2540D, EPA 120.1, SM2510B, SM15 426C, SM9221CE, 9222D, 9221B, 9222B, 9215B, 2310B, 2320B, 4500NH3-H, EPA 350.2/.1, SM5210B, SW-846 3015, 6020, 7470A, 5540C, 4500H-B, EPA 200.8, SM3500Cr-D, EPA 245.1, 245.2, SW-846 9040B, 3005A, EPA 6010B, 7196A, SW-846 9010B, 9030B. Organic Parameters: SW-846 8260B, 8270C, 3510C, EPA 608, 624, 625, SW-846 5030B, 8021B, 8081A, 8082, 8151A, 8330.)
Solid & Chemical Materials (Inorganic Parameters: SW-846 9040B, 3005A, 6010B, 7196A, 5030B, 9010B, 9030B, 1030, 1311, 3050B, 3051, 7471A, 9014, 9012A, 9045C, 9050A, 9065. Organic Parameters: SW-846 8021B, 8081A, 8082, 8151A, 8330, 8260B, 8270C, 1311, 3540C, 3545, 3550B, 3580A, 5035L, 5035H.)

New York Department of Health Certificate/Lab ID: 11148.
Drinking Water (Inorganic Parameters: SM9223B, 9222B, 8215B, EPA 200.8, 200.7, 245.2, SM5310C, EPA 314.0, 331.0, SM2320B, EPA 300.0, 325.2, 110.2, SM2120B, 4500CN-E, 4500F-C, EPA 150.1, SM4500H-B, 4500NO3-F, 2540C, EPA 120.1, SM 2510B. Organic Parameters: EPA 524.2, 504.1, SM6251B.)
Non-Potable Water (Inorganic Parameters: SM9221E, 9222D, 9221B, 9222B, 9215B, EPA 405.1, SM5210B, EPA 410.4, SM5220D, EPA 305.1, SM2310B-4a, EPA 310.1, SM2320B, EPA 200.7, 300.0, 325.2, LACHAT 10-117-07-1A or B, SM4500Cl-E, EPA 340.2, SM4500F-C, EPA 375.4, SM15 426C, EPA 350.1, 350.2, LACHAT 10-107-06-1-B, SM4500NH3-H, EPA 351.1, LACHAT 10-107-06-2, EPA 353.2, LACHAT 10-107-041-C, SM4500-NO30F, EPA 354.1, SM4500-NO2-B, EPA 365.2, SM4500P-E, EPA 160.3, SM2540B, EPA 160.1, SM2540C, EPA 160.2, SM2540D, EPA 200.8, EPA 6010B, 6020, EPA 7196A, S\M3500Cr-D, EPA 245.1, 245.2, 7470A, 110.2, SM2120B, 335.2, LACHAT 10-204-00-1-A, EPA 150.1, 9040B, SM4500-HB, EPA 1664A, EPA 415.1, SM5310C, EPA 420.1, SM14 510C, EPA 120.1, SM2510B, EPA 376.2, SM4500S-D, EPA 425.1, SM5540C, EPA 3005A, 3015. Organic Parameters: EPA 624, 8260B, 8270C, 625, 608, 8081A, 8151A, 8330, 8082, 8021B, EPA 3510C, 5030B, 9010B, 9030B.)
Solid & Hazardous Waste (Inorganic Parameters: EPA 9040B, 9045C, 1010, 1030, SW-846 Ch 7 Sec 7.3, EPA 6010B, 7196A, 7471A, 9012A, 9014, 9040B, 9045C, 9065, 9050, EPA 1311, 3005A, 3050B, 3051, 9010B, 9030B. Organic Parameters: EPA 8260B, 8270C, 8081A, 8151A, 8330, 8082, 8021B, 3540C, 3545, 3580, 5030B, 5035.)
Analytical Services Protocol: CLP Volatile Organics, CLP Inorganics, CLP PCB/Pesticides.

Rhode Island Department of Health Certificate/Lab ID: LAO00065.
Refer to MA-DEP Certificate for Potable and Non-Potable Water.
Refer to NY-DOH Certificate for Potable and Non-Potable Water.

Pennsylvania Department of Environmental Protection Certificate/Lab ID: 68-03671. Registered Laboratory.

05140914:15

CHAIN OF CUSTODY

PAGE 1 OF 1

ALPHA TECHNICAL

WESTBORO, MA
TEL: 508-898-9220
FAX: 508-898-9193

MANSFIELD, MA
TEL: 508-822-9300
FAX: 508-822-3288

Client Information

Client: EPM, Inc.
Address: 1983 Marcus Ave
Lake Success, NY
Phone: 516-328-1194
Fax: 516-328-1381
Email: rhart@epmco.com

☐ These samples have been previously analyzed by Alpha

Project Information

Project Name: Borden Ave.
Project Location: LIC, NY
Project #: 29007
Project Manager: Rich Hart
ALPHA Quote #:

Turn-Around Time

☐ Standard ☑ RUSH (only confirmed if pre-approved!)
Date Due: 5/12/09 Time:

Other Project Specific Requirements/Comments/Detection Limits:

Report Information - Data Deliverables

☐ FAX ☑ EMAIL
☐ ADEx ☐ Add'l Deliverables

Billing Information

☑ Same as Client info PO #: 29007

Regulatory Requirements/Report Limits

State /Fed Program | Criteria

MA MCP PRESUMPTIVE CERTAINTY --- CT REASONABLE CONFIDENCE PROTO-

☐ Yes ☑ No Are MCP Analytical Methods Required?
☐ Yes ☑ No Are CT RCP (Reasonable Confidence Protocols) Required?

ALPHA Lab ID (Lab Use Only)	Sample ID	Collection Date	Collection Time	Sample Matrix	Sampler's Initials	ANALYSIS 8260 TCL VOCs +MTBE	TCL SVOCs (8270)	PCB 8082	PPL Metals	PPL Pests	TPH DRO/GRO	Paint Filter	TCLP VOC	TCLP SVOC	TCLP Pests	TCLP Herbs	RCRA Charact	SAMPLE HANDLING Filtration ☐ Done ☐ Not needed ☐ Lab to do Preservation ☐ Lab to do (Please specify below)	Sample Specific Comments	TOTAL # BOTTLES
05830-01	S-1	5/7/09	1210	S	DS	X	X	X	X	X	X	X	X	X	X	X	X			

PLEASE ANSWER QUESTIONS ABOVE!

IS YOUR PROJECT MA MCP or CT RCP?

	Container Type																	
	Preservative																	

Relinquished By:	Date/Time	Received By:	Date/Time
R. Hart	5/7/09		5/7/09 14:30
	5/7/09 20:30		5/7/09 18:15
			5/7/09 20:30

Please print clearly, legibly and completely. Samples can not be logged in and turnaround time clock will not start until any ambiguities are resolved. All samples submitted are subject to Alpha's Terms and Conditions. See reverse side.

FORM NO: 01-01 (rev. 14-OCT-07)

ENVIRONMENTAL
PLANNING &
EPM MANAGEMENT, INC.

February 13, 2009

Harry M. Palmer, P.E.
HAKS Engineering
NYCDOT Field Office
23-23 Borden Ave
Long Island City, NY 11101

RE: Groundwater Sample Results
Borden Avenue Bridge Emergency Repair
Long Island City, NY
NYCDOT Contract No. HBQ1162E

Dear Mr. Palmer:

This letter contains the results of groundwater sampling conducted by EPM, Inc. on February 3, 2009 at the project site for the Emergency Construction of the Borden Avenue Bridge over Dutch Kills, in Long Island City, NY (Figure 1 - Project Site Location). The sample was collected to assess general groundwater quality at the project site to identify possible handling and discharge options during construction dewatering. The groundwater results were compared to the New York City Department of Environmental Protection (NYCDEP) Limitations for Effluent to Sanitary or Combined Sewers, May 2005; and, to the New York State Department of Environmental Conservation (NYSDEC) Technical and Operational Guidance Series (TOGS 1.1.1) Ambient Water Quality Standards and Guidance Values for Class GA waters.

SAMPLE COLLECTION AND ANALYSIS

One groundwater sample was collected from a permanent 2-inch diameter flush mount monitoring well identified on Figure 2 as well MW-1. The well was measured on February 3, 2009 for depths to water and free phase petroleum product. Measurements for free product were collected with a dual-phase interface probe prior to purging the well, after purging the well and allowing the water to return to static levels, and again after the collection of samples. No visible petroleum sheen or measurable free product was observed in the well during the three separate measurements. The field measurements and pre-sample purge volumes are summarized below.

Well Characteristics, Field Observations, and Purge Volume on February 3, 2009						
Well Diameter	Total Well Depth	Initial Depth to Water	Depth to Free Product (ft.)	Well Volume	Purge Volume	Depth to Water at Sampling
2 in.	10 ft.	4.10 ft.	None observed	1 gal.	~ 5 gal.	4.22 ft.

1983 Marcus Avenue, Suite 109
Lake Success, New York 11042
Phone: 516-328-1194 / Fax: 516-328-1381

Purging was accomplished by hand bailing the well with a dedicated clear Teflon bailer. The well purged dry after the initial removal of approximately 1.5 gallons of water. The well was allowed to recharge to near static level and purged to dryness a second time, and again allowed to return to static level before bailing a third time to dryness, for a total purge volume of approximately 5 gallons. After the third round of purging, the well was allowed to return to near static level and was sampled for laboratory analysis using a clean bailer.

The sample was collected in laboratory provided containers and placed in a cooler on ice and delivered under chain-of-custody to New York and New Jersey Certified Laboratory Chemtech, Inc. of Mountainside, New Jersey. The sample was analyzed by the laboratory for VOCs (by EPA Method 8260), SVOCs (8270), PCBs (608), metals (200.7/245.1), Total Petroleum Hydrocarbons (1664), Flashpoint, Total Solids, Total Suspended Solids, Carbonaceous Biochemical Oxygen Demand, Total Nitrogen, Nitrites, Nitrates, Total Kjeldahl Nitrogen (TKN), and Chloride. Field measurements were collected for temperature and pH at the time of sampling with a Hanna Model HI991300 field meter.

RESULTS

The analytical results are summarized in Table 1 through Table 6 in Attachment 2. The complete analytical laboratory report and chain-of-custody form are provided as Attachment 3.

No contaminants were detected above their respective NYCDEP Sewer Discharge Limitations (Table 1). As summarized in Table 2 through Table 6, no contaminants were detected above their respective NYSDEC Class GA values.

CONCLUSIONS AND RECOMMENDATIONS

The laboratory results for the groundwater sample collected on February 3rd do not indicate any exceedence of the regulatory values. Based on these results, groundwater beneath the project site appears to meet NYCDEP Sewer Discharge requirements. It is cautioned that these results are based on a single sample collected under non-pumping conditions. Based on the industrial nature of the surrounding area, it is possible that significant dewatering could draw potentially impacted groundwater from the surrounding area towards the dewatering point.

Discharges of dewatering fluids to the nearby surface water body would require a New York State Pollutant Discharge Elimination System (SPDES) Permit issued by NYSDEC. Prior to issuing a permit, NYCDEP or NYSDEC could require additional data, such as pump test results, to determine the extent of influence of onsite dewatering on the surrounding aquifer and the potential to impact offsite groundwater contaminants.

Please feel free to contact the undersigned at 516-328-1194 should you have any questions.

Very truly yours,

Richard R. Hart
Environmental Planning &
Management, Inc.

Attachment 1: Figure 1. Project Site Location
Figure 2. Groundwater Sample Location

Attachment 2: Data Summary Tables

Attachment 3: Laboratory Report and Chain-of-Custody Form

ATTACHMENT 1

Figure 1. Project Site Location

Figure 2. Groundwater Sample Location

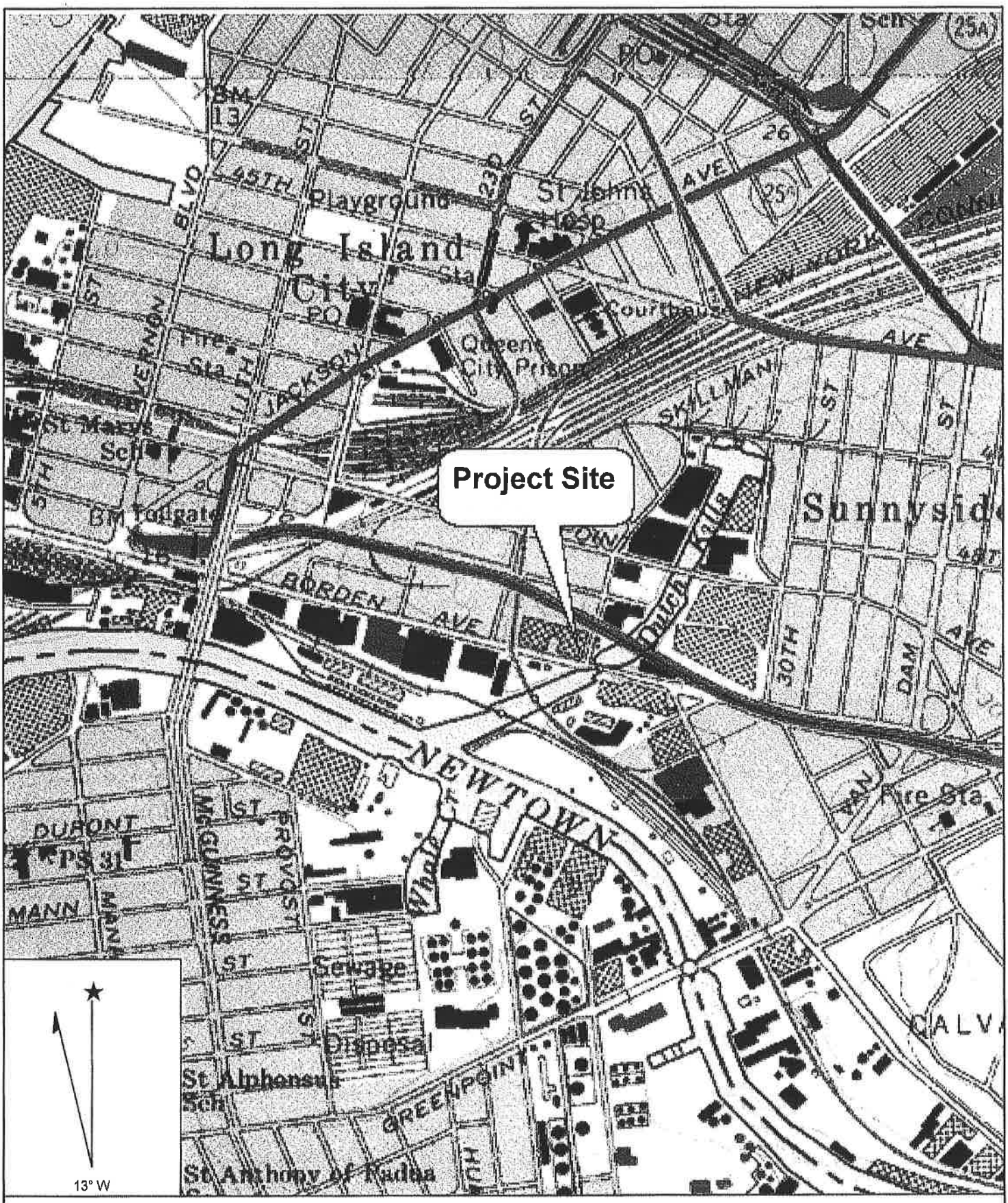

Name: BROOKLYN
Date: 2/11/2009
Scale: 1 inch equals 800 feet

Location: 040° 44' 24.68" N 073° 56' 43.62" W
Caption: Figure 1. Project Site Location
Borden Ave at 27th Street
Long Island City, NY

Copyright (C) 2001, Maptech, Inc.

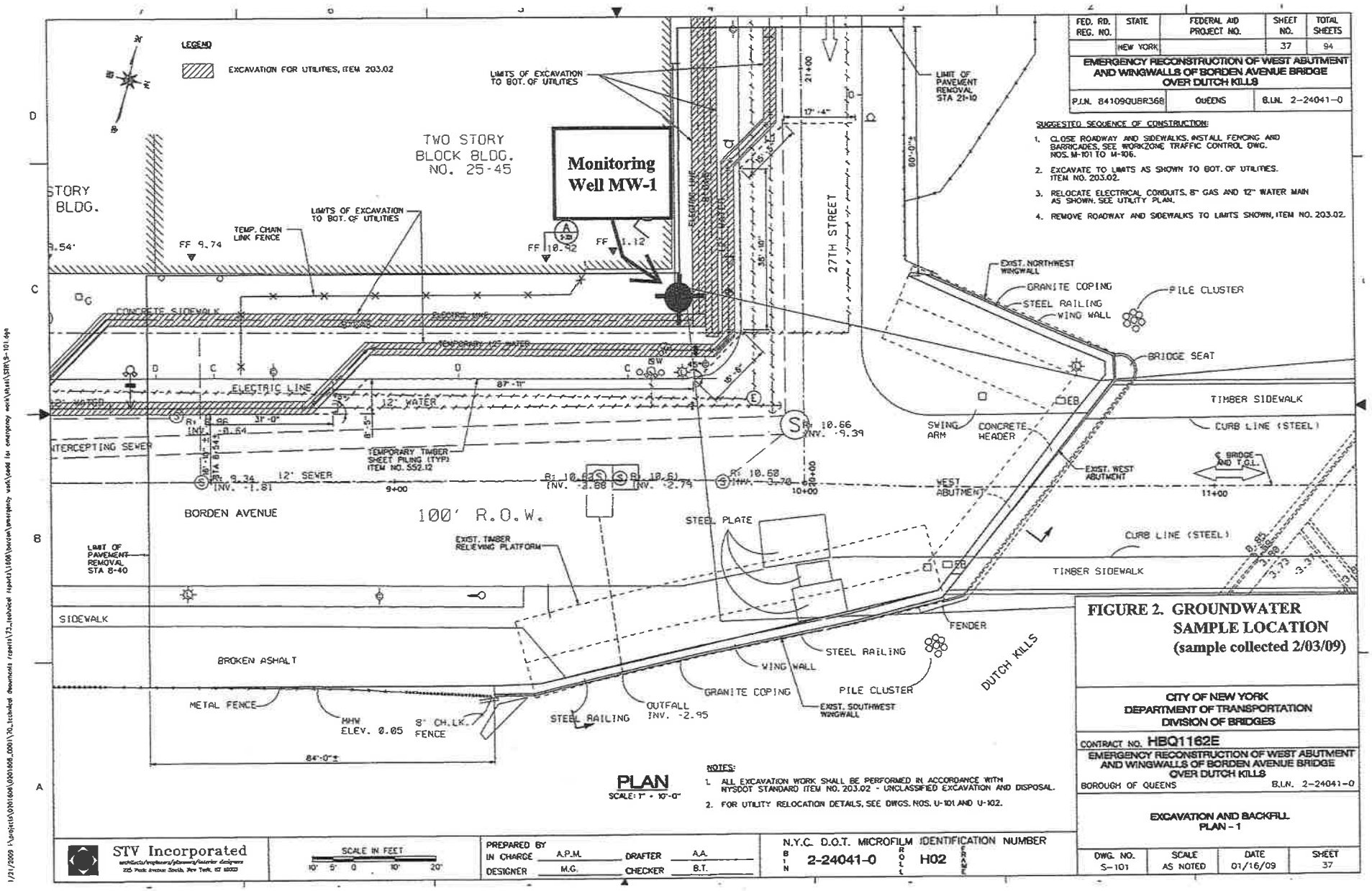

PLAN
SCALE: 1" = 10'-0"

NOTES:
1. ALL EXCAVATION WORK SHALL BE PERFORMED IN ACCORDANCE WITH NYSDOT STANDARD ITEM NO. 203.02 - UNCLASSIFIED EXCAVATION AND DISPOSAL.
2. FOR UTILITY RELOCATION DETAILS, SEE DWGS. NOS. U-101 AND U-102.

SUGGESTED SEQUENCE OF CONSTRUCTION:
1. CLOSE ROADWAY AND SIDEWALKS, INSTALL FENCING AND BARRICADES, SEE WORKZONE TRAFFIC CONTROL DWG. NOS. M-101 TO M-106.
2. EXCAVATE TO LIMITS AS SHOWN TO BOT. OF UTILITIES. ITEM NO. 203.02.
3. RELOCATE ELECTRICAL CONDUITS, 8" GAS AND 12" WATER MAIN AS SHOWN. SEE UTILITY PLAN.
4. REMOVE ROADWAY AND SIDEWALKS TO LIMITS SHOWN, ITEM NO. 203.02.

FED. RD. REG. NO.	STATE	FEDERAL AID PROJECT NO.	SHEET NO.	TOTAL SHEETS
	NEW YORK		37	94

EMERGENCY RECONSTRUCTION OF WEST ABUTMENT AND WINGWALLS OF BORDEN AVENUE BRIDGE OVER DUTCH KILLS

P.I.N. 84109QUBR368	QUEENS	B.I.N. 2-24041-0

FIGURE 2. GROUNDWATER SAMPLE LOCATION (sample collected 2/03/09)

CITY OF NEW YORK
DEPARTMENT OF TRANSPORTATION
DIVISION OF BRIDGES

CONTRACT NO. HBQ1162E
EMERGENCY RECONSTRUCTION OF WEST ABUTMENT AND WINGWALLS OF BORDEN AVENUE BRIDGE OVER DUTCH KILLS
BOROUGH OF QUEENS B.I.N. 2-24041-0

EXCAVATION AND BACKFILL PLAN - 1

DWG. NO.	SCALE	DATE	SHEET
S-101	AS NOTED	01/16/09	37

STV Incorporated
architects/engineers/planners/interior designers
225 Park Avenue South, New York, NY 10003

SCALE IN FEET
10' 5' 0 10' 20'

PREPARED BY
IN CHARGE A.P.M. DRAFTER A.A.
DESIGNER M.G. CHECKER B.T.

N.Y.C. D.O.T. MICROFILM IDENTIFICATION NUMBER
B I N 2-24041-0 ROLL H02 FRAME

1/21/2009 I:\projects\070160\d\060608_001\70_technical documents / reports\72_technical reports\160B\boring\emergency work\add to emergency work\dwgs\STR\S-101.dgn

ATTACHMENT 2

Data Summary Tables

Table 1
Groundwater Results Compared to NYCDEP Sewer Discharge Limits
Borden Avenue Bridge Project
Long Island City, NY

Sample ID:	MW-1	Units	NYCDEP Sewer Discharge Limit
Lab Identification:	A1357-18		
PARAMETER			
Total Petroleum Hydrocarbons	ND	ppm	50
pH	8.1	SU's	5-11
Temperature	52	Deg F	< 150
Flash Point	>150	Deg F	>140
Cadmium (unfiltered)	ND	ppm	2
Total Chromium (unfiltered)	0.00339	ppm	5
Hexavalent Chromium	ND	ppm	NA
Lead	0.0119	ppm	2
copper	0.00373	ppm	5
Mercury (unfiltered)	ND	ppm	0.05
Nickel (unfiltered)	ND	ppm	3
Zinc (unfiltered)	0.0147	ppm	5
Benzene	ND	ppb	134
Carbontetrachloride	ND	ppb	NA
Chlroroform	ND	ppb	NA
1,4 Dichlorobenzene	ND	ppb	NA
Ethylbenzene	ND	ppb	380
MTBE	ND	ppb	50
Napthalene	ND	ppb	47
Phenol	ND	ppb	NA
Toluene	ND	ppb	74
Xylenes (total)	ND	ppb	74
Tetrachloroethylene	ND	ppb	20
1,2,4-Trichlorobenzene	ND	ppb	NA
1,1,1 Trichloroethane	ND	ppb	NA
PCBs (total)	ND	ppb	1
Total Suspended Solids	26	ppm	350
Total Solids	800	ppm	NA
CBOD	ND	ppm	NA
Chloride	120	ppm	NA
Total Nitrogen	4.4	ppm	NA

Notes:
ND: Not detected above method detection limit.
NA: Not Available
SU = Standard Units
J = An Estimated Value due to analyte being detected below instrument lower calibration range.
ppm= parts per million
ppb= parts per billion

Table 2
Results for General Chemistry Analysis on Groundwater
NYCDOT Borden Avenue Bridge Project
Long Island City, NY

Sample Location:	MW-1	NYSDEC Class GA Value[(a)]
Lab Identification:	A1357-18	
Paramater	**Results**	
$CBOD_5$ (mg/l)	ND	NA
Chloride (mg/l)	120	250
Nitrate (mg/l)	ND	10
Total Nitrogen (mg/l)	4.4	10
Nitrite (mg/l)	ND	1
Total Kjeldahl Nitrogen (mg/l)	4.39	NA
Ignitability (deg F)	> 150	NA
Total Solids (mg/l)	800	NA
Total Suspended Solids (mg/l)	26.0	NA
Total Petro. Hydrocarbons (mg/l)	ND	NA

(a) - NYSDEC Division of Water Technical and Operational Guidance Series 1.1.1, June 1998.

ND: Not detected above method detection limit.

NA: No standard or guidance value available.

Table 3
Semi-Volatile Organic Compounds (SVOCs) in Groundwater
NYCDOT Borden Avenue Bridge Project
Long Island City, NY

Sample Location:	MW-1	Class GA Standards/ Guidance Values*
Lab Identification:	A1357-18	
ANALYTE	RESULTS (ppb)	
2-Chlorophenol	ND	NA
4-Chloro-3-methyl phenol	ND	NA
2,4-Dichlorophenol	ND	5.0
2,4-Dimethylphenol	ND	50.0
2,4-Dinitrophenol	ND	10.0
Ignitability (deg C)	ND	NA
4-Nitrophenol	ND	NA
Pentachlorophenol	ND	1.0
Phenol	ND	1.0
2,4,6-Trichlorophenol	ND	NA
Acenaphthene	ND	20.0
Acenaphthylene	ND	NA
Anthracene	ND	50.0
Benzo(a)anthracene	ND	0.002
Benzo(a)pyrene	ND	NA
Benzo(b)fluoranthene	ND	0.002
Benzo(g,h,i)perylene	ND	NA
Benzo(k)fluoranthene	ND	0.002
4-Bromophenyl phenyl ether	ND	NA
Butyl benzyl phthalate	ND	50.0
2-Chloronaphthalene	ND	10.0
4-Chloroaniline	ND	5.0
Chrysene	ND	0.002
bis(2-Chloroethoxy)methane	ND	5.0
bis(2-Chloroethyl)ether	ND	1.00
4-Chlorophenyl phenyl ether	ND	NA
2,4-Dinitrotoluene	ND	5.0
2,6-Dinitrotoluene	ND	5.0
3,3'-Dichlorobenzidine	ND	5.0
Dibenzo(a,h)anthracene	ND	NA
Di-n-butyl phthalate	ND	50.0
Di-n-octyl phthalate	ND	50.0

Sample Location:	MW-1	Class GA Standards/ Guidance Values*
Lab Identification:	A1357-18	
ANALYTE	RESULTS (ppb)	
Diethyl phthalate	ND	50.0
Dimethyl phthalate	ND	50.0
bis(2-ethylhexyl)phthalate	ND	5.0
Fluoranthene	ND	50.0
Fluorene	ND	50.0
Hexachlorobenzene	ND	0.04
Hexachlorobutadiene	ND	0.5
Hexachlorocyclopentadiene	ND	5.0
Hexachloroethane	ND	5.0
Indeno(1,2,3-cd)pyrene	ND	0.002
Isophorone	ND	50.0
Naphthalene	ND	10.0
Nitrobenzene	ND	0.4
n-Nitrosodimethylamine	ND	NA
N-Nitroso-di-n-propylamine	ND	NA
N-Nitrosodiphenylamine	ND	50.0
Phenanthrene	ND	50.0
Pyrene	ND	50.0
Benzyl Alcohol	ND	NA
2-Methylphenol	ND	NA
2,2-oxybis(1-Chloropropane)	ND	NA
3 & 4 Methylphenols	ND	NA
Benzoic Acid	ND	NA
2-Methylnaphthalene	ND	NA
2,4,5-Trichlorophenol	ND	NA
2-Nitroaniline	ND	5.0
3-Nitroaniline	ND	5.0
4-Nitroaniline	ND	5.0
Dibenzofuran	ND	NA
4,6-Dinitro-2-metylphenol	ND	NA
Azobenzene	ND	5.0

Notes:
*NYSDEC TOGS (1.1.1) Ambient Water Quality Standars and Guidance Values, 1998
All analytical concentrations and guidance values reported in parts per billion (ug/L)
N/A = Not Applicable (no guidance value).
ND: Not detected above method detection limit.

Table 4
Volatile Organic Compounds (VOCs) in Groundwater
NYCDOT Borden Avenue Bridge Project
Long Island City, NY

Sample Location:	MW-1	Class GA Standards/ Guidance Values*	Sample Location:	MW-1	Class GA Standards/ Guidance Values*
Lab Identification:	A1357-18		Lab Identification:	A1357-18	
ANALYTE	RESULTS (ppb)		ANALYTE	RESULTS (ppb)	
Acrolein	ND	5	Tert Butyl Alcohol	ND	NA
Acrylonitrile	ND	5.0	Acetone	ND	50.0
Benzene	ND	1.0	Carbon Disulfide	ND	NA
Bromodichloromethane	ND	50.0	Methyl Tert Butyl Ether	ND	NA
Bromoform	ND	50.0	Vinyl Acetate	ND	NA
Ignitability (deg C)	ND	5.0	2-Butanone	ND	NA
Carbon Tetrachloride	ND	5.0	2,2-Dichloropropane	ND	5.0
Chloroethane	ND	5.0	Bromochloromethane	ND	5.0
2-Chloroethyl vinyl ether	ND	NA	1,1-Dichloropropene	ND	5.0
Chloroform	ND	7.0	Dibromomethane	ND	5.0
Chloromethane	ND	5.0	4-Methyl-2-Pentanone	ND	NA
Dibromochloromethane	ND	50	1,3-Dichloropropane	ND	5.0
1,2-Dichlorobenzene	ND	3.0	2-Hexanone	ND	50.0
1,3-Dichlorobenzene	ND	3.0	1,2-Dibromoethane	ND	NA
1,4-Dichlorobenzene	ND	3.0	Chlorobenzene	ND	5.0
Dichlorodifluoromethane	ND	5.0	1,1,1,2-Tetrachloroethane	ND	5.0
1,1-Dichloroethane	ND	5.0	Styrene	ND	5.0
1,2-Dichloroethane	ND	0.6	Isoprpylbenzene	ND	NA
1,1-Dichloroethene	ND	5	1,2,3-Trichloropropane	ND	0.04
cis-1,2-Dichloroethene	ND	5.0	Bromobenzene	ND	5.0
trans-1,2-Dichloroethene	ND	5.0	n-propylbenzene	ND	5.0
1,2-Dichloropropane	ND	1.0	2-Chlorotoluene	ND	5.0
cis-1,3-Dichloropropene	ND	0.4	1,3,5-Trimethylbenzene	ND	5.0
trans-1,3-Dichloropropene	ND	0.4	4-Chlorotoluene	ND	5.0
Ethylbenzene	ND	5.0	tert-Butylbenzene	ND	5.0
Methylene chloride	ND	5.0	1,2,4-Trimethylbenzene	ND	5.0
1,1,2,2-Tetrachloroethane	ND	5.0	sec-Butylbenzene	ND	5.0
Tetrachloroethene	ND	5.0	p-Isopropyltoluene	ND	NA
Toluene	ND	5.0	n-Butylbenzene	ND	5.0
1,1,1-Trichloroethane	ND	5.0	1,2-Dibromo-3-Chloropropane	ND	0.04
1,1,2-Trichloroethane	ND	1.0	1,2,4-Trichlorobenzene	ND	NA
Trichloroethene	ND	5.0	Hexachlorobutadiene	ND	0.5
Trichlorofluoromethane	ND	5.0	Naphthalene	ND	10.0
Vinyl chloride	ND	2.0	1,2,3-Trichlorobenzene	ND	NA
Xylenes (total)	ND	5.0			

Notes:

*NYSDEC TOGS (1.1.1) Ambient Water Quality Standards and Guidance Values, 1998

All analytical concentrations and guidance values reported in parts per billion (ug/L)

NA : Not Applicable (no guidance value)

ND: Not detected above method detection limit.

Table 5
Total (unfiltered) Metals in Groundwater
NYCDOT Borden Avenue Bridge Project
Long Island City, NY

Sample Location:	MW-1	Class GA Standards / Guidance Values*
Lab Identification:	A1357-18	
ANALYTE	RESULTS (ppb)	
Cadmium	ND	5
Chromium	3.39 J	50
Chromium (Hexavent)	ND	50
Copper	3.73 J	200
Lead	11.9	25
Mercury	ND	0.7
Zinc	14.7 J	2,000

Notes:

*NYSDEC, TOGS (1.1.1) Ambient Water Quality Standars and Guidance Values.

J = Estimated value. Compound Detected below instrument lower calibration range.

ND: Not detected above method detection limit.

Table 6
Polychlorinated Biphenyls (PCBs) and Pesticides in Groundwater
NYCDOT Borden Avenue Bridge Project
Long Island City, NY

Sample Location:	MW-1	Class GA Standards / Guidance Values*
Lab Identification:	A1357-18	
ANALYTE	RESULTS (ppb)	
Aroclor 1016	ND	0.09**
Aroclor 1221	ND	
Aroclor 1232	ND	
Aroclor 1242	ND	
Aroclor 1248	ND	
Ignitability (deg C)	ND	
Aroclor 1260	ND	

Notes:

* NYSDEC, TOGS Ambient Water Quality Standars and Guidance Values, Class GA 1998

** Applies to the sum of these substances.
ND: Not detected above method detection limit.

TestAmerica

THE LEADER IN ENVIRONMENTAL TESTING

ANALYTICAL REPORT

Job Number: 220-9412-1

SDG Number: 220-9412

Job Description: Borden Ave Bridge

For:
STV Incorporated
225 Park Avenue South
New York, NY 10003

Attention: Mr. Brian Connolly

Approved for release.
Pally A Mercure
6/29/2009 1:01 PM

Designee for
Jill M Duhancik
Project Manager I
jill.duhancik@testamericainc.com
06/29/2009

The test results in this report meet all NELAP requirements unless specified within the case narrative. Pursuant to NELAP, this report may not be reproduced, except in full, without the written approval of the laboratory. All questions regarding this report should be directed to the TestAmerica Project Manager.

TestAmerica Connecticut Certifications and Approvals: CTDOH PH-047, MADEP CT023, RIDOH A43, NYDOH 10602, NY NELAP 10602, NHDES 2528, NJDEP CT410, ME DOH CT023, UT DOH 2032614458

TestAmerica Laboratories, Inc.
TestAmerica Connecticut 128 Long Hill Cross Road, Shelton, CT 06484
Tel (203) 929-8140 Fax (203) 929-8142 www.testamericainc.com

ACCREDITED IN ACCORDANCE WITH nelac

Case Narrative for Job: 220-9412-1

Client: STV Incorporated
Date: June 29, 2009

I certify that this data package is in compliance with the terms and conditions of this contract, both technically and for completeness, for other than the conditions detailed above. Release of the data contained in this hardcopy data package and in the computer-readable data submitted on diskette has been authorized by the Laboratory Manager or his designee, as verified by the following signature.

Lawrence Decker
Laboratory Director

June 29, 2009
Date

Job Narrative
220-J9412-1

Comments
No additional comments.

Receipt
Method(s) 8015B: The container label for the following samples did not match the information listed on the Chain-of-Custody (COC): S-1 (220-9412-3), S-2 (220-9412-4). The container labels list S-2 is on the container label time list 11:15 and S-1 is listed on the container cap while the COC lists ?. There are two samples a- 3 and a - 4, both times list 11:15 June 19 2009 and both labels list S-2 as the sample IDS. One cap list S-1 and the other cap list S-2.

All other samples were received in good condition within temperature requirements.

GC/MS VOA
Method(s) 8260B: Surrogate recovery for the following sample was outside control limits: S-1 (220-9412-3). Evidence of matrix interference is present; re-analysis was performed and confirmed. The first set of data was reported.

No other analytical or quality issues were noted.

GC/MS Semi VOA
Method(s) 8270C: Internal standard (ISTD) response for the following sample was outside control limits: W-TANK (220-9412-1). The sample was re-analyzed with concurring results. The original set of data has been reported.

No other analytical or quality issues were noted.

GC VOA
No analytical or quality issues were noted.

GC Semi VOA
Method(s) 8015B: The laboratory analyzes the following compounds for fingerprint analysis: #2 Fuel Oil, #4 Fuel Oil, #6 Fuel Oil, Kerosene, Gasoline, Motor Oil, and Coal Tar. The elution pattern present in the client's samples are compared to these standards to determine the best match. The carbon range for the following samples is between a #6 Fuel Oil and motor oil, however, because of differences of such magnitude, it is impossible to determine whether the unknown is a combination of the two or a completely different oil:S-1 (220-9412-3), S-2 (220-9412-4), W-EXC (220-9412-2), W-TANK (220-9412-1)

Method(s) 8081A: The capping continuing calibration verification (CCV) analyzed on 6/23/09 on GC-hp-6890-8 failed on both columns. These samples were analyzed in another bracket with concurring results.

Method(s) 8081A: The continuing calibration verification (CCV) for 6/24/09 recovered above the upper control limit. The samples associated with this CCV were non-detects for the affected analytes; therefore, the data have been reported.

No other analytical or quality issues were noted.

Metals
No analytical or quality issues were noted.

General Chemistry
Method(s) 9045C: This analysis is normally performed in the field and has a method-defined holding time of 15 minutes. All associated samples have been qualified with the "HF" flag to indicate they were performed in the laboratory outside the 15 minute timeframe.

No other analytical or quality issues were noted.

Organic Prep
No analytical or quality issues were noted.

VOA Prep
No analytical or quality issues were noted.

EXECUTIVE SUMMARY - Detections

Client: STV Incorporated

Job Number: 220-9412-1
Sdg Number: 220-9412

Lab Sample ID / Analyte	Client Sample ID	Result / Qualifier		Reporting Limit	Units	Method
220-9412-1	W-TANK					
Acetone		16	*	10	ug/L	8260B
Acenaphthene		3.6	J	17	ug/L	8270C
Acenaphthylene		2.2	J	17	ug/L	8270C
Anthracene		5.4	J	17	ug/L	8270C
Benzo[a]anthracene		8.6	J	17	ug/L	8270C
Benzo[a]pyrene		5.3	J	17	ug/L	8270C
Benzo[b]fluoranthene		4.4	J	17	ug/L	8270C
Benzo[g,h,i]perylene		6.5	J	17	ug/L	8270C
Benzo[k]fluoranthene		1.7	J	17	ug/L	8270C
Bis(2-ethylhexyl) phthalate		290		17	ug/L	8270C
Chrysene		8.3	J	17	ug/L	8270C
Dibenz(a,h)anthracene		3.1	J	17	ug/L	8270C
Dibenzofuran		2.1	J	17	ug/L	8270C
Fluoranthene		17		17	ug/L	8270C
Fluorene		3.5	J	17	ug/L	8270C
Indeno[1,2,3-cd]pyrene		4.0	J	17	ug/L	8270C
2-Methylnaphthalene		2.5	J	17	ug/L	8270C
Naphthalene		1.9	J	17	ug/L	8270C
Phenanthrene		13	J	17	ug/L	8270C
Pyrene		19		17	ug/L	8270C
Gasoline Range Organics (GRO)-C6-C10		0.018	J	0.050	mg/L	8015B
Diesel Range Organics [C10-C28]		11000		5000	ug/L	8015B
PCB-1242		1.6		0.50	ug/L	8082
PCB-1254		2.3		0.50	ug/L	8082
PCB-1260		2.2		0.50	ug/L	8082
Arsenic		25.8		12.5	ug/L	6020
Cadmium		13.1		12.5	ug/L	6020
Chromium		101		25.0	ug/L	6020
Copper		290		25.0	ug/L	6020
Nickel		126		12.5	ug/L	6020
Lead		280		12.5	ug/L	6020
Antimony		16.2	J	20.0	ug/L	6020
Zinc		506		125	ug/L	6020
Mercury		0.44		0.20	ug/L	7470A

EXECUTIVE SUMMARY - Detections

Client: STV Incorporated

Job Number: 220-9412-1
Sdg Number: 220-9412

Lab Sample ID / Analyte	Client Sample ID	Result / Qualifier		Reporting Limit	Units	Method
220-9412-2	W-EXC					
Acetone		6.2	J *	10	ug/L	8260B
Acenaphthene		0.66	J	4.1	ug/L	8270C
Anthracene		0.56	J	4.1	ug/L	8270C
Benzo[a]anthracene		0.74	J	4.1	ug/L	8270C
Benzo[a]pyrene		0.60	J	4.1	ug/L	8270C
Benzo[b]fluoranthene		0.52	J	4.1	ug/L	8270C
Benzo[g,h,i]perylene		1.6	J	4.1	ug/L	8270C
Bis(2-ethylhexyl) phthalate		17		4.1	ug/L	8270C
Chrysene		0.66	J	4.1	ug/L	8270C
Di-n-butyl phthalate		0.40	J	4.1	ug/L	8270C
Fluoranthene		1.7	J	4.1	ug/L	8270C
Fluorene		0.57	J	4.1	ug/L	8270C
Indeno[1,2,3-cd]pyrene		0.92	J	4.1	ug/L	8270C
Naphthalene		0.38	J	4.1	ug/L	8270C
Phenanthrene		1.4	J	4.1	ug/L	8270C
Pyrene		2.2	J	4.1	ug/L	8270C
Diesel Range Organics [C10-C28]		890		500	ug/L	8015B
Arsenic		7.3	J	12.5	ug/L	6020
Chromium		18.4	J	25.0	ug/L	6020
Copper		54.8		25.0	ug/L	6020
Nickel		30.0		12.5	ug/L	6020
Lead		47.0		12.5	ug/L	6020
Zinc		103	J	125	ug/L	6020

EXECUTIVE SUMMARY - Detections

Client: STV Incorporated

Job Number: 220-9412-1
Sdg Number: 220-9412

Lab Sample ID / Analyte	Client Sample ID	Result / Qualifier		Reporting Limit	Units	Method
220-9412-3	S-1					
Acetone		210	J *	230	ug/Kg	8260B
Benzene		27	J	57	ug/Kg	8260B
Carbon disulfide		11	J	57	ug/Kg	8260B
Ethylbenzene		50	J	57	ug/Kg	8260B
Methylene Chloride		100	J B	230	ug/Kg	8260B
1,1,2,2-Tetrachloroethane		390		57	ug/Kg	8260B
Xylenes, Total		300		57	ug/Kg	8260B
Acenaphthene		2000	J	12000	ug/Kg	8270C
Anthracene		5000	J	12000	ug/Kg	8270C
Benzo[a]anthracene		6200	J	12000	ug/Kg	8270C
Benzo[a]pyrene		6400	J	12000	ug/Kg	8270C
Benzo[b]fluoranthene		5000	J	12000	ug/Kg	8270C
Benzo[g,h,i]perylene		11000	J	12000	ug/Kg	8270C
Benzo[k]fluoranthene		1900	J	12000	ug/Kg	8270C
Bis(2-ethylhexyl) phthalate		130000		12000	ug/Kg	8270C
Chrysene		6900	J	12000	ug/Kg	8270C
Dibenz(a,h)anthracene		11000	J	12000	ug/Kg	8270C
Dibenzofuran		1500	J	12000	ug/Kg	8270C
Fluoranthene		12000	J	12000	ug/Kg	8270C
Fluorene		2800	J	12000	ug/Kg	8270C
Indeno[1,2,3-cd]pyrene		14000		12000	ug/Kg	8270C
2-Methylnaphthalene		6000	J	12000	ug/Kg	8270C
Naphthalene		3300	J	12000	ug/Kg	8270C
Phenanthrene		14000		12000	ug/Kg	8270C
Pyrene		19000		12000	ug/Kg	8270C
Gasoline Range Organics (GRO)-C6-C10		28		11	mg/Kg	8015B
Diesel Range Organics [C10-C28]		5100000		960000	ug/Kg	8015B
4,4'-DDD		310		38	ug/Kg	8081A
4,4'-DDE		130		38	ug/Kg	8081A
4,4'-DDT		410	*	38	ug/Kg	8081A
Aldrin		6.4	J	19	ug/Kg	8081A
beta-BHC		18	J	19	ug/Kg	8081A
Dieldrin		180		38	ug/Kg	8081A
Endrin		270		38	ug/Kg	8081A
Endrin aldehyde		75		38	ug/Kg	8081A
Endrin ketone		76		38	ug/Kg	8081A
Heptachlor		41		19	ug/Kg	8081A
Heptachlor epoxide		27		19	ug/Kg	8081A
Methoxychlor		96	J *	190	ug/Kg	8081A
alpha-Chlordane		61		19	ug/Kg	8081A
gamma-Chlordane		94		19	ug/Kg	8081A
PCB-1242		590		77	ug/Kg	8082
PCB-1254		520		77	ug/Kg	8082
PCB-1260		760		77	ug/Kg	8082
Silver		11.2		1.0	mg/Kg	6020
Arsenic		45.6		1.0	mg/Kg	6020
Beryllium		0.70	J	1.0	mg/Kg	6020
Cadmium		51.6		1.0	mg/Kg	6020

EXECUTIVE SUMMARY - Detections

Client: STV Incorporated

Job Number: 220-9412-1
Sdg Number: 220-9412

Lab Sample ID / Client Sample ID / Analyte	Result / Qualifier		Reporting Limit	Units	Method
Chromium	342		2.0	mg/Kg	6020
Copper	974		2.0	mg/Kg	6020
Nickel	392		1.0	mg/Kg	6020
Lead	607		1.0	mg/Kg	6020
Antimony	8.5		1.6	mg/Kg	6020
Selenium	8.8		2.0	mg/Kg	6020
Thallium	0.56	J	1.4	mg/Kg	6020
Zinc	1350		10	mg/Kg	6020
Mercury	2.4		0.55	mg/Kg	7471A
Ignitability	neg		2.2	mm/sec	1030
Temperature	1890		1.00	Fahrenheit	1030
Sulfide, Reactive	372		20.0	mg/Kg	9034
pH	8.52	HF	0.100	SU	9045C
Percent Moisture	56.4		0.10	%	Moisture
Percent Solids	43.6		0.10	%	Moisture
TCLP					
Methyl Ethyl Ketone	0.0084	J B	0.010	mg/L	8260B
Benzene	0.00082	J	0.0050	mg/L	8260B
Arsenic	0.064	J	0.075	mg/L	6010B
Barium	0.33		0.025	mg/L	6010B
Chromium	0.023	J	0.025	mg/L	6010B

EXECUTIVE SUMMARY - Detections

Client: STV Incorporated

Job Number: 220-9412-1
Sdg Number: 220-9412

Lab Sample ID / Analyte	Client Sample ID	Result / Qualifier		Reporting Limit	Units	Method
220-9412-4	S-2					
Acetone		340	*	220	ug/Kg	8260B
Benzene		10	J	54	ug/Kg	8260B
Carbon disulfide		20	J	54	ug/Kg	8260B
Ethylbenzene		19	J	54	ug/Kg	8260B
Methylene Chloride		98	J B	220	ug/Kg	8260B
Toluene		2.4	J B	54	ug/Kg	8260B
Xylenes, Total		90		54	ug/Kg	8260B
Acenaphthene		2400	J	12000	ug/Kg	8270C
Acenaphthylene		2100	J	12000	ug/Kg	8270C
Anthracene		7500	J	12000	ug/Kg	8270C
Benzo[a]anthracene		8900	J	12000	ug/Kg	8270C
Benzo[a]pyrene		7200	J	12000	ug/Kg	8270C
Benzo[b]fluoranthene		5300	J	12000	ug/Kg	8270C
Benzo[g,h,i]perylene		11000	J	12000	ug/Kg	8270C
Benzo[k]fluoranthene		1800	J	12000	ug/Kg	8270C
Bis(2-ethylhexyl) phthalate		110000		12000	ug/Kg	8270C
Chrysene		9200	J	12000	ug/Kg	8270C
Dibenz(a,h)anthracene		11000	J	12000	ug/Kg	8270C
Dibenzofuran		1400	J	12000	ug/Kg	8270C
Fluoranthene		15000		12000	ug/Kg	8270C
Fluorene		1700	J	12000	ug/Kg	8270C
Indeno[1,2,3-cd]pyrene		14000		12000	ug/Kg	8270C
2-Methylnaphthalene		2200	J	12000	ug/Kg	8270C
Naphthalene		2900	J	12000	ug/Kg	8270C
Phenanthrene		8700	J	12000	ug/Kg	8270C
Pyrene		21000		12000	ug/Kg	8270C
Gasoline Range Organics (GRO)-C6-C10		50		11	mg/Kg	8015B
Diesel Range Organics [C10-C28]		7000000		3600000	ug/Kg	8015B
4,4'-DDD		120		14	ug/Kg	8081A
4,4'-DDE		66		14	ug/Kg	8081A
4,4'-DDT		260	*	14	ug/Kg	8081A
alpha-BHC		3.0	J	7.3	ug/Kg	8081A
beta-BHC		8.3		7.3	ug/Kg	8081A
Dieldrin		74		14	ug/Kg	8081A
Endrin		200		14	ug/Kg	8081A
Endrin aldehyde		46		14	ug/Kg	8081A
Endrin ketone		43		14	ug/Kg	8081A
Heptachlor		26		7.3	ug/Kg	8081A
Heptachlor epoxide		11		7.3	ug/Kg	8081A
Methoxychlor		61	J *	73	ug/Kg	8081A
alpha-Chlordane		31		7.3	ug/Kg	8081A
gamma-Chlordane		32		7.3	ug/Kg	8081A
PCB-1242		720		180	ug/Kg	8082
PCB-1254		1100		180	ug/Kg	8082
PCB-1260		890		180	ug/Kg	8082
Silver		19.5		0.74	mg/Kg	6020
Arsenic		34.0		0.74	mg/Kg	6020
Beryllium		0.80		0.74	mg/Kg	6020

EXECUTIVE SUMMARY - Detections

Client: STV Incorporated

Job Number: 220-9412-1
Sdg Number: 220-9412

Lab Sample ID / Client Sample ID / Analyte	Result / Qualifier		Reporting Limit	Units	Method
Cadmium	104		0.74	mg/Kg	6020
Chromium	530		1.5	mg/Kg	6020
Copper	1450		1.5	mg/Kg	6020
Nickel	337		0.74	mg/Kg	6020
Lead	1370		0.74	mg/Kg	6020
Antimony	7.3		1.2	mg/Kg	6020
Selenium	5.0		1.5	mg/Kg	6020
Thallium	0.31	J	1.0	mg/Kg	6020
Zinc	2240		7.4	mg/Kg	6020
Mercury	2.6		0.54	mg/Kg	7471A
Ignitability	neg		2.2	mm/sec	1030
Temperature	1890		1.00	Fahrenheit	1030
Sulfide, Reactive	644		19.9	mg/Kg	9034
pH	8.34	HF	0.100	SU	9045C
Percent Moisture	53.7		0.10	%	Moisture
Percent Solids	46.3		0.10	%	Moisture
TCLP					
Methyl Ethyl Ketone	0.0085	J B	0.010	mg/L	8260B
Benzene	0.0018	J	0.0050	mg/L	8260B
Heptachlor	0.000042	J	0.00025	mg/L	8081A
Barium	0.34		0.025	mg/L	6010B
Chromium	0.038		0.025	mg/L	6010B

METHOD SUMMARY

Client: STV Incorporated

Job Number: 220-9412-1
Sdg Number: 220-9412

Description	Lab Location	Method	Preparation Method
Matrix Solid			
Volatile Organic Compounds (GC/MS)	TAL CT	SW846 8260B	
TCLP Extraction	TAL CT		SW846 1311
Purge and Trap	TAL CT		SW846 5030B
Semivolatile Compounds by Gas Chromatography/Mass Spectrometry (GC/MS)	TAL CT	SW846 8270C	
TCLP Extraction	TAL CT		SW846 1311
Liquid-Liquid Extraction (Separatory Funnel)	TAL CT		SW846 3510C
Automated Soxhlet Extraction	TAL CT		SW846 3541
Gasoline Range Organics - (GC)	TAL SAV	SW846 8015B	
Purge and Trap	TAL SAV		SW846 5030A
Diesel Range Organics (DRO) (GC)	TAL CT	SW846 8015B	
Hydrocarbon Product Identification (GC)	TAL CT	SW846 8015B	
Ultrasonic Extraction	TAL CT		SW846 3550B
Ultrasonic Extraction	TAL CT		SW846 3550B
Organochlorine Pesticides (GC)	TAL CT	SW846 8081A	
TCLP Extraction	TAL CT		SW846 1311
Liquid-Liquid Extraction (Separatory Funnel)	TAL CT		SW846 3510C
Ultrasonic Extraction	TAL CT		SW846 3550B
Polychlorinated Biphenyls (PCBs) by Gas Chromatography	TAL CT	SW846 8082	
Ultrasonic Extraction	TAL CT		SW846 3550B
Herbicides (GC)	TAL SAV	SW846 8151A	
TCLP Extraction	TAL SAV		SW846 1311
Extraction (Herbicides)	TAL SAV		SW846 8151A
Metals (ICP)	TAL CT	SW846 6010B	
TCLP Extraction	TAL CT		SW846 1311
Preparation, Total Metals	TAL CT		SW846 3010A
Metals (ICP/MS)	TAL CT	SW846 6020	
Preparation, Metals	TAL CT		SW846 3050B
Mercury (CVAA)	TAL CT	SW846 7470A	
TCLP Extraction	TAL CT		SW846 1311
Preparation, Mercury	TAL CT		SW846 7470A
Mercury (CVAA)	TAL CT	SW846 7471A	
Preparation, Mercury	TAL CT		SW846 7471A
Ignitability, Solids	TAL CT	SW846 1030	
Chromium, Hexavalent	TAL SAV	SW846 7196A	
Alkaline Digestion (Chromium, Hexavalent)	TAL SAV		SW846 3060A
Cyanide, Reactive	TAL CT	SW846 9012	
Cyanide, Reactive	TAL CT		SW846 7.3.3
Sulfide, Reactive	TAL CT	SW846 9034	
Sulfide, Reactive	TAL CT		SW846 7.3.4

METHOD SUMMARY

Client: STV Incorporated

Job Number: 220-9412-1
Sdg Number: 220-9412

Description	Lab Location	Method	Preparation Method
Matrix Solid			
pH	TAL CT	SW846 9045C	
Percent Moisture	TAL CT	EPA Moisture	
Matrix Water			
Volatile Organic Compounds (GC/MS)	TAL CT	SW846 8260B	
Purge and Trap	TAL CT		SW846 5030B
Semivolatile Compounds by Gas Chromatography/Mass Spectrometry (GC/MS)	TAL CT	SW846 8270C	
Liquid-Liquid Extraction (Separatory Funnel)	TAL CT		SW846 3510C
Gasoline Range Organics - (GC)	TAL SAV	SW846 8015B	
Purge and Trap	TAL SAV		SW846 5030B
Diesel Range Organics (DRO) (GC)	TAL CT	SW846 8015B	
Hydrocarbon Product Identification (GC)	TAL CT	SW846 8015B	
Liquid-Liquid Extraction (Separatory Funnel)	TAL CT		SW846 3510C
Liquid-Liquid Extraction (Separatory Funnel)	TAL CT		SW846 3510C
Polychlorinated Biphenyls (PCBs) by Gas Chromatography	TAL CT	SW846 8082	
Liquid-Liquid Extraction (Separatory Funnel)	TAL CT		SW846 3510C
Metals (ICP/MS)	TAL CT	SW846 6020	
Preparation, Total Metals	TAL CT		SW846 3010A
Mercury (CVAA)	TAL CT	SW846 7470A	
Preparation, Mercury	TAL CT		SW846 7470A

Lab References:

TAL CT = TestAmerica Connecticut

TAL SAV = TestAmerica Savannah

Method References:

EPA = US Environmental Protection Agency

SW846 = "Test Methods For Evaluating Solid Waste, Physical/Chemical Methods", Third Edition, November 1986 And Its Updates.

METHOD / ANALYST SUMMARY

Client: STV Incorporated

Job Number: 220-9412-1
Sdg Number: 220-9412

Method	Analyst	Analyst ID
SW846 8260B	Kostrzewska, Barbara	BK
SW846 8260B	Paveglio, Peter R	PRP
SW846 8270C	Jonas, Stephan	SJ
SW846 8015B	Moncrief, Amy	AM
SW846 8015B	Widomski, Sarah	SW
SW846 8081A	Cooper, Susan	SC
SW846 8082	Smith, Karli	KS
SW846 8151A	Kellar, Joshua	JK
SW846 6010B	Petronchak, Nestor	NP
SW846 6020	Petronchak, Nestor	NP
SW846 7470A	Voytek, Joseph F	JFV
SW846 7471A	Voytek, Joseph F	JFV
SW846 1030	Tillotson, Ray	RT
SW846 7196A	Ross, Jon	JR
SW846 9012	Natoli, Richard A	RN
SW846 9034	Natoli, Richard A	RN
SW846 9045C	Mendoza, Julia	JM
EPA Moisture	Capece, Bill	BC

SAMPLE SUMMARY

Client: STV Incorporated

Job Number: 220-9412-1
Sdg Number: 220-9412

Lab Sample ID	Client Sample ID	Client Matrix	Date/Time Sampled	Date/Time Received
220-9412-1	W-TANK	Water	06/19/2009 1030	06/20/2009 0748
220-9412-2	W-EXC	Water	06/19/2009 1000	06/20/2009 0748
220-9412-3	S-1	Solid	06/19/2009 1045	06/20/2009 0748
220-9412-4	S-2	Solid	06/19/2009 1115	06/20/2009 0748

SAMPLE RESULTS

Client: STV Incorporated

Job Number: 220-9412-1
Sdg Number: 220-9412

Client Sample ID: **W-TANK**

Lab Sample ID: 220-9412-1
Client Matrix: Water

Date Sampled: 06/19/2009 1030
Date Received: 06/20/2009 0748

8260B Volatile Organic Compounds (GC/MS)

Method: 8260B
Preparation: 5030B
Dilution: 1.0
Date Analyzed: 06/22/2009 1416
Date Prepared: 06/22/2009 1416

Analysis Batch: 220-28342

Instrument ID: HP 5890/5971 GC/MS
Lab File ID: L5665.D
Initial Weight/Volume: 5 mL
Final Weight/Volume: 5 mL

Analyte	Result (ug/L)	Qualifier	MDL	RL
Acetone	16	*	1.0	10
Benzene	5.0	U	0.74	5.0
Bromodichloromethane	5.0	U	0.48	5.0
Bromoform	5.0	U	0.46	5.0
Bromomethane	5.0	U	2.1	5.0
Methyl Ethyl Ketone	10	U *	1.1	10
Carbon disulfide	5.0	U	0.90	5.0
Carbon tetrachloride	5.0	U	1.1	5.0
Chlorobenzene	5.0	U	0.72	5.0
Chloroethane	5.0	U	1.1	5.0
Chloroform	5.0	U	0.67	5.0
Chloromethane	5.0	U	1.1	5.0
Dibromochloromethane	5.0	U	0.55	5.0
1,1-Dichloroethane	5.0	U	1.0	5.0
1,2-Dichloroethane	5.0	U	0.72	5.0
1,1-Dichloroethene	5.0	U	0.83	5.0
1,2-Dichloropropane	5.0	U	0.71	5.0
cis-1,3-Dichloropropene	5.0	U	0.28	5.0
trans-1,3-Dichloropropene	5.0	U	0.57	5.0
Ethylbenzene	5.0	U	0.87	5.0
2-Hexanone	10	U	1.1	10
Methylene Chloride	5.0	U	0.78	5.0
methyl isobutyl ketone	10	U	0.38	10
Styrene	5.0	U	0.64	5.0
1,1,2,2-Tetrachloroethane	5.0	U	0.81	5.0
Tetrachloroethene	5.0	U	0.81	5.0
Toluene	5.0	U	0.72	5.0
1,1,1-Trichloroethane	5.0	U	0.69	5.0
1,1,2-Trichloroethane	5.0	U	0.65	5.0
Trichloroethene	5.0	U	0.62	5.0
Vinyl chloride	5.0	U	0.99	5.0
Xylenes, Total	5.0	U	2.3	5.0
cis-1,2-Dichloroethene	5.0	U	0.99	5.0
trans-1,2-Dichloroethene	5.0	U	0.76	5.0

Surrogate	%Rec	Acceptance Limits
1,2-Dichloroethane-d4 (Surr)	113	65 - 136
4-Bromofluorobenzene	115	51 - 142
Dibromofluoromethane	112	68 - 132
Toluene-d8 (Surr)	117	63 - 127

Client: STV Incorporated

Job Number: 220-9412-1
Sdg Number: 220-9412

Client Sample ID: **W-EXC**

Lab Sample ID: 220-9412-2
Client Matrix: Water

Date Sampled: 06/19/2009 1000
Date Received: 06/20/2009 0748

8260B Volatile Organic Compounds (GC/MS)

Method: 8260B
Preparation: 5030B
Dilution: 1.0
Date Analyzed: 06/22/2009 1352
Date Prepared: 06/22/2009 1352

Analysis Batch: 220-28342

Instrument ID: HP 5890/5971 GC/MS
Lab File ID: L5664.D
Initial Weight/Volume: 5 mL
Final Weight/Volume: 5 mL

Analyte	Result (ug/L)	Qualifier	MDL	RL
Acetone	6.2	J *	1.0	10
Benzene	5.0	U	0.74	5.0
Bromodichloromethane	5.0	U	0.48	5.0
Bromoform	5.0	U	0.46	5.0
Bromomethane	5.0	U	2.1	5.0
Methyl Ethyl Ketone	10	U *	1.1	10
Carbon disulfide	5.0	U	0.90	5.0
Carbon tetrachloride	5.0	U	1.1	5.0
Chlorobenzene	5.0	U	0.72	5.0
Chloroethane	5.0	U	1.1	5.0
Chloroform	5.0	U	0.67	5.0
Chloromethane	5.0	U	1.1	5.0
Dibromochloromethane	5.0	U	0.55	5.0
1,1-Dichloroethane	5.0	U	1.0	5.0
1,2-Dichloroethane	5.0	U	0.72	5.0
1,1-Dichloroethene	5.0	U	0.83	5.0
1,2-Dichloropropane	5.0	U	0.71	5.0
cis-1,3-Dichloropropene	5.0	U	0.28	5.0
trans-1,3-Dichloropropene	5.0	U	0.57	5.0
Ethylbenzene	5.0	U	0.87	5.0
2-Hexanone	10	U	1.1	10
Methylene Chloride	5.0	U	0.78	5.0
methyl isobutyl ketone	10	U	0.38	10
Styrene	5.0	U	0.64	5.0
1,1,2,2-Tetrachloroethane	5.0	U	0.81	5.0
Tetrachloroethene	5.0	U	0.81	5.0
Toluene	5.0	U	0.72	5.0
1,1,1-Trichloroethane	5.0	U	0.69	5.0
1,1,2-Trichloroethane	5.0	U	0.65	5.0
Trichloroethene	5.0	U	0.62	5.0
Vinyl chloride	5.0	U	0.99	5.0
Xylenes, Total	5.0	U	2.3	5.0
cis-1,2-Dichloroethene	5.0	U	0.99	5.0
trans-1,2-Dichloroethene	5.0	U	0.76	5.0

Surrogate	%Rec	Acceptance Limits
1,2-Dichloroethane-d4 (Surr)	113	65 - 136
4-Bromofluorobenzene	119	51 - 142
Dibromofluoromethane	114	68 - 132
Toluene-d8 (Surr)	115	63 - 127

Client: STV Incorporated

Job Number: 220-9412-1
Sdg Number: 220-9412

Client Sample ID: S-1

Lab Sample ID: 220-9412-3
Client Matrix: Solid

Date Sampled: 06/19/2009 1045
Date Received: 06/20/2009 0748

8260B Volatile Organic Compounds (GC/MS)-TCLP

Method: 8260B
Preparation: 5030B
Dilution: 1.0
Date Analyzed: 06/23/2009 1311
Date Prepared: 06/23/2009 1311
Date Leached: 06/22/2009 1032

Analysis Batch: 220-28395
Leachate Batch: 220-28315

Instrument ID: HP 6890/5973 GC/MS
Lab File ID: W6282.D
Initial Weight/Volume: 5 mL
Final Weight/Volume: 5 mL

Analyte	DryWt Corrected: N	Result (mg/L)	Qualifier	MDL	RL
Vinyl chloride		0.0050	U	0.00098	0.0050
1,1-Dichloroethene		0.0050	U	0.00083	0.0050
Methyl Ethyl Ketone		0.0084	J B	0.0011	0.010
Chloroform		0.0050	U	0.00067	0.0050
Carbon tetrachloride		0.0050	U	0.0011	0.0050
Benzene		0.00082	J	0.00074	0.0050
1,2-Dichloroethane		0.0050	U	0.00072	0.0050
Trichloroethene		0.0050	U	0.00062	0.0050
Tetrachloroethene		0.0050	U	0.00081	0.0050
Chlorobenzene		0.0050	U	0.00072	0.0050

Surrogate	%Rec	Acceptance Limits
1,2-Dichloroethane-d4 (Surr)	102	65 - 136
4-Bromofluorobenzene	108	51 - 142
Dibromofluoromethane	98	68 - 132
Toluene-d8 (Surr)	104	63 - 127

Client: STV Incorporated

Job Number: 220-9412-1
Sdg Number: 220-9412

Client Sample ID: S-1

Lab Sample ID: 220-9412-3
Client Matrix: Solid % Moisture: 56.4

Date Sampled: 06/19/2009 1045
Date Received: 06/20/2009 0748

8260B Volatile Organic Compounds (GC/MS)

Method: 8260B
Preparation: 5030B
Dilution: 5.0
Date Analyzed: 06/22/2009 1640
Date Prepared: 06/22/2009 1640

Analysis Batch: 220-28348

Instrument ID: HP 5890/5971A GC/MS
Lab File ID: O1277.D
Initial Weight/Volume: 5 g
Final Weight/Volume: 5 mL

Analyte	DryWt Corrected: Y	Result (ug/Kg)	Qualifier	MDL	RL
Acetone		210	J *	26	230
Benzene		27	J	6.5	57
Bromodichloromethane		57	U	3.4	57
Bromoform		57	U	7.0	57
Bromomethane		57	U	24	57
Methyl Ethyl Ketone		110	U	18	110
Carbon disulfide		11	J	4.7	57
Carbon tetrachloride		57	U	11	57
Chlorobenzene		57	U	6.8	57
Chloroethane		57	U	11	57
Chloroform		57	U	3.9	57
Chloromethane		57	U	8.9	57
Dibromochloromethane		57	U	4.0	57
1,1-Dichloroethane		57	U	3.4	57
1,2-Dichloroethane		57	U	6.6	57
1,1-Dichloroethene		57	U	6.6	57
1,2-Dichloropropane		57	U	7.7	57
cis-1,3-Dichloropropene		57	U	6.4	57
trans-1,3-Dichloropropene		57	U	3.1	57
Ethylbenzene		50	J	8.0	57
2-Hexanone		110	U	14	110
Methylene Chloride		100	J B	12	230
methyl isobutyl ketone		57	U	6.3	57
Styrene		57	U	1.7	57
1,1,2,2-Tetrachloroethane		390		6.0	57
Tetrachloroethene		57	U	9.3	57
Toluene		57	U	0.85	57
1,1,1-Trichloroethane		57	U	6.1	57
1,1,2-Trichloroethane		57	U	4.2	57
Trichloroethene		57	U	9.3	57
Vinyl chloride		57	U	2.6	57
Xylenes, Total		300		5.6	57
cis-1,2-Dichloroethene		57	U	4.2	57
trans-1,2-Dichloroethene		57	U	4.5	57

Surrogate	%Rec		Acceptance Limits
1,2-Dichloroethane-d4 (Surr)	73		59 - 132
4-Bromofluorobenzene	102		34 - 124
Dibromofluoromethane	64		59 - 123
Toluene-d8 (Surr)	43	*	50 - 118

Client: STV Incorporated

Job Number: 220-9412-1
Sdg Number: 220-9412

Client Sample ID: **S-2**

Lab Sample ID: 220-9412-4
Client Matrix: Solid

Date Sampled: 06/19/2009 1115
Date Received: 06/20/2009 0748

8260B Volatile Organic Compounds (GC/MS)-TCLP

Method: 8260B
Preparation: 5030B
Dilution: 1.0
Date Analyzed: 06/23/2009 1335
Date Prepared: 06/23/2009 1335
Date Leached: 06/22/2009 1032

Analysis Batch: 220-28395
Leachate Batch: 220-28315

Instrument ID: HP 6890/5973 GC/MS
Lab File ID: W6283.D
Initial Weight/Volume: 5 mL
Final Weight/Volume: 5 mL

Analyte	DryWt Corrected: N	Result (mg/L)	Qualifier	MDL	RL
Vinyl chloride		0.0050	U	0.00098	0.0050
1,1-Dichloroethene		0.0050	U	0.00083	0.0050
Methyl Ethyl Ketone		0.0085	J B	0.0011	0.010
Chloroform		0.0050	U	0.00067	0.0050
Carbon tetrachloride		0.0050	U	0.0011	0.0050
Benzene		0.0018	J	0.00074	0.0050
1,2-Dichloroethane		0.0050	U	0.00072	0.0050
Trichloroethene		0.0050	U	0.00062	0.0050
Tetrachloroethene		0.0050	U	0.00081	0.0050
Chlorobenzene		0.0050	U	0.00072	0.0050

Surrogate	%Rec	Acceptance Limits
1,2-Dichloroethane-d4 (Surr)	102	65 - 136
4-Bromofluorobenzene	108	51 - 142
Dibromofluoromethane	96	68 - 132
Toluene-d8 (Surr)	104	63 - 127

Client: STV Incorporated

Job Number: 220-9412-1
Sdg Number: 220-9412

Client Sample ID: **S-2**

Lab Sample ID: 220-9412-4
Client Matrix: Solid
% Moisture: 53.7
Date Sampled: 06/19/2009 1115
Date Received: 06/20/2009 0748

8260B Volatile Organic Compounds (GC/MS)

Method: 8260B
Preparation: 5030B
Dilution: 5.0
Date Analyzed: 06/22/2009 1705
Date Prepared: 06/22/2009 1705
Analysis Batch: 220-28348
Instrument ID: HP 5890/5971A GC/MS
Lab File ID: O1278.D
Initial Weight/Volume: 5 g
Final Weight/Volume: 5 mL

Analyte	DryWt Corrected: Y	Result (ug/Kg)	Qualifier	MDL	RL
Acetone		340	*	24	220
Benzene		10	J	6.2	54
Bromodichloromethane		54	U	3.2	54
Bromoform		54	U	6.6	54
Bromomethane		54	U	22	54
Methyl Ethyl Ketone		110	U	17	110
Carbon disulfide		20	J	4.4	54
Carbon tetrachloride		54	U	10	54
Chlorobenzene		54	U	6.4	54
Chloroethane		54	U	11	54
Chloroform		54	U	3.7	54
Chloromethane		54	U	8.4	54
Dibromochloromethane		54	U	3.8	54
1,1-Dichloroethane		54	U	3.2	54
1,2-Dichloroethane		54	U	6.3	54
1,1-Dichloroethene		54	U	6.3	54
1,2-Dichloropropane		54	U	7.2	54
cis-1,3-Dichloropropene		54	U	6.0	54
trans-1,3-Dichloropropene		54	U	2.9	54
Ethylbenzene		19	J	7.6	54
2-Hexanone		110	U	13	110
Methylene Chloride		98	J B	12	220
methyl isobutyl ketone		54	U	5.9	54
Styrene		54	U	1.6	54
1,1,2,2-Tetrachloroethane		54	U	5.6	54
Tetrachloroethene		54	U	8.7	54
Toluene		2.4	J B	0.80	54
1,1,1-Trichloroethane		54	U	5.7	54
1,1,2-Trichloroethane		54	U	4.0	54
Trichloroethene		54	U	8.7	54
Vinyl chloride		54	U	2.5	54
Xylenes, Total		90		5.2	54
cis-1,2-Dichloroethene		54	U	4.0	54
trans-1,2-Dichloroethene		54	U	4.2	54

Surrogate	%Rec	Acceptance Limits
1,2-Dichloroethane-d4 (Surr)	76	59 - 132
4-Bromofluorobenzene	91	34 - 124
Dibromofluoromethane	73	59 - 123
Toluene-d8 (Surr)	65	50 - 118

Client: STV Incorporated

Job Number: 220-9412-1
Sdg Number: 220-9412

Client Sample ID: **W-TANK**

Lab Sample ID: 220-9412-1
Client Matrix: Water

Date Sampled: 06/19/2009 1030
Date Received: 06/20/2009 0748

8270C Semivolatile Compounds by Gas Chromatography/Mass Spectrometry (GC/MS)

Method: 8270C
Preparation: 3510C
Dilution: 4.0
Date Analyzed: 06/22/2009 1226
Date Prepared: 06/20/2009 1317

Analysis Batch: 220-28334
Prep Batch: 220-28305

Instrument ID: HP 6890/5975
Lab File ID: A5735.D
Initial Weight/Volume: 960 mL
Final Weight/Volume: 1 mL
Injection Volume: 1.0 uL

Analyte	Result (ug/L)	Qualifier	MDL	RL
Acenaphthene	3.6	J	1.3	17
Acenaphthylene	2.2	J	1.4	17
Anthracene	5.4	J	1.2	17
Benzo[a]anthracene	8.6	J	1.2	17
Benzo[a]pyrene	5.3	J	1.5	17
Benzo[b]fluoranthene	4.4	J	1.5	17
Benzo[g,h,i]perylene	6.5	J	1.5	17
Benzo[k]fluoranthene	1.7	J	1.7	17
Bis(2-chloroethoxy)methane	17	U	1.3	17
Bis(2-chloroethyl)ether	17	U	1.2	17
Bis(2-ethylhexyl) phthalate	290		2.3	17
Butyl benzyl phthalate	17	U	1.5	17
Carbazole	17	U	1.4	17
Chrysene	8.3	J	1.0	17
Di-n-butyl phthalate	17	U	1.5	17
Di-n-octyl phthalate	17	U	1.6	17
4-Bromophenyl phenyl ether	17	U	1.8	17
4-Chloroaniline	17	U	1.2	17
2-Chloronaphthalene	17	U	1.6	17
4-Chlorophenyl phenyl ether	17	U	1.5	17
Dibenz(a,h)anthracene	3.1	J	1.6	17
Dibenzofuran	2.1	J	1.8	17
Diethyl phthalate	17	U	1.8	17
Dimethyl phthalate	17	U	1.6	17
1,2-Dichlorobenzene	17	U	1.3	17
1,3-Dichlorobenzene	17	U	1.0	17
1,4-Dichlorobenzene	17	U	1.3	17
3,3'-Dichlorobenzidine	17	U	1.5	17
2,4-Dinitrotoluene	17	U	1.7	17
2,6-Dinitrotoluene	17	U	1.1	17
Fluoranthene	17		1.3	17
Fluorene	3.5	J	1.1	17
Hexachlorobenzene	17	U	1.4	17
Hexachlorobutadiene	17	U	0.83	17
Hexachlorocyclopentadiene	17	U	1.5	17
Hexachloroethane	17	U	1.5	17
Indeno[1,2,3-cd]pyrene	4.0	J	1.2	17
Isophorone	17	U	1.3	17
2-Methylnaphthalene	2.5	J	1.1	17
Naphthalene	1.9	J	1.2	17
2-Nitroaniline	17	U	1.4	17
3-Nitroaniline	17	U	0.96	17
Nitrobenzene	17	U	1.2	17
N-Nitrosodi-n-propylamine	17	U	1.4	17

Client: STV Incorporated

Job Number: 220-9412-1
Sdg Number: 220-9412

Client Sample ID: **W-TANK**

Lab Sample ID: 220-9412-1
Client Matrix: Water

Date Sampled: 06/19/2009 1030
Date Received: 06/20/2009 0748

8270C Semivolatile Compounds by Gas Chromatography/Mass Spectrometry (GC/MS)

Method: 8270C
Preparation: 3510C
Dilution: 4.0
Date Analyzed: 06/22/2009 1226
Date Prepared: 06/20/2009 1317

Analysis Batch: 220-28334
Prep Batch: 220-28305

Instrument ID: HP 6890/5975
Lab File ID: A5735.D
Initial Weight/Volume: 960 mL
Final Weight/Volume: 1 mL
Injection Volume: 1.0 uL

Analyte	Result (ug/L)	Qualifier	MDL	RL
N-Nitrosodiphenylamine	17	U	1.4	17
Phenanthrene	13	J	1.2	17
Pyrene	19		1.4	17
1,2,4-Trichlorobenzene	17	U	1.5	17
4-Chloro-3-methylphenol	21	U	1.4	21
2-Chlorophenol	17	U	0.96	17
2-Methylphenol	17	U	1.0	17
4-Methylphenol	17	U	1.2	17
2,4-Dichlorophenol	17	U	1.4	17
2,4-Dimethylphenol	17	U	1.4	17
2,4-Dinitrophenol	100	U	1.8	100
4,6-Dinitro-2-methylphenol	100	U	7.8	100
2-Nitrophenol	17	U	1.1	17
4-Nitrophenol	42	U	6.0	42
Pentachlorophenol	100	U	1.3	100
Phenol	17	U	0.79	17
2,4,5-Trichlorophenol	42	U	1.2	42
2,4,6-Trichlorophenol	17	U	1.5	17
Benzyl alcohol	17	U	1.7	17
4-Nitroaniline	17	U	0.83	17
2,2'-oxybis[1-chloropropane]	17	U	1.0	17

Surrogate	%Rec	Acceptance Limits
2-Fluorobiphenyl	87	39 - 120
2-Fluorophenol	43	13 - 120
2,4,6-Tribromophenol	76	36 - 120
Nitrobenzene-d5	79	40 - 120
Phenol-d5	35	10 - 120
Terphenyl-d14	68	10 - 120

Client: STV Incorporated

Job Number: 220-9412-1
Sdg Number: 220-9412

Client Sample ID: **W-EXC**

Lab Sample ID: 220-9412-2
Client Matrix: Water

Date Sampled: 06/19/2009 1000
Date Received: 06/20/2009 0748

8270C Semivolatile Compounds by Gas Chromatography/Mass Spectrometry (GC/MS)

Method: 8270C
Preparation: 3510C
Dilution: 1.0
Date Analyzed: 06/22/2009 1107
Date Prepared: 06/20/2009 1317

Analysis Batch: 220-28334
Prep Batch: 220-28305

Instrument ID: HP 6890/5975
Lab File ID: A5732.D
Initial Weight/Volume: 970 mL
Final Weight/Volume: 1 mL
Injection Volume: 1.0 uL

Analyte	Result (ug/L)	Qualifier	MDL	RL
Acenaphthene	0.66	J	0.32	4.1
Acenaphthylene	4.1	U	0.35	4.1
Anthracene	0.56	J	0.30	4.1
Benzo[a]anthracene	0.74	J	0.31	4.1
Benzo[a]pyrene	0.60	J	0.36	4.1
Benzo[b]fluoranthene	0.52	J	0.37	4.1
Benzo[g,h,i]perylene	1.6	J	0.37	4.1
Benzo[k]fluoranthene	4.1	U	0.41	4.1
Bis(2-chloroethoxy)methane	4.1	U	0.32	4.1
Bis(2-chloroethyl)ether	4.1	U	0.30	4.1
Bis(2-ethylhexyl) phthalate	17		0.56	4.1
Butyl benzyl phthalate	4.1	U	0.36	4.1
Carbazole	4.1	U	0.34	4.1
Chrysene	0.66	J	0.26	4.1
Di-n-butyl phthalate	0.40	J	0.36	4.1
Di-n-octyl phthalate	4.1	U	0.39	4.1
4-Bromophenyl phenyl ether	4.1	U	0.45	4.1
4-Chloroaniline	4.1	U	0.30	4.1
2-Chloronaphthalene	4.1	U	0.40	4.1
4-Chlorophenyl phenyl ether	4.1	U	0.36	4.1
Dibenz(a,h)anthracene	4.1	U	0.39	4.1
Dibenzofuran	4.1	U	0.44	4.1
Diethyl phthalate	4.1	U	0.44	4.1
Dimethyl phthalate	4.1	U	0.39	4.1
1,2-Dichlorobenzene	4.1	U	0.32	4.1
1,3-Dichlorobenzene	4.1	U	0.26	4.1
1,4-Dichlorobenzene	4.1	U	0.32	4.1
3,3'-Dichlorobenzidine	4.1	U	0.37	4.1
2,4-Dinitrotoluene	4.1	U	0.41	4.1
2,6-Dinitrotoluene	4.1	U	0.27	4.1
Fluoranthene	1.7	J	0.32	4.1
Fluorene	0.57	J	0.27	4.1
Hexachlorobenzene	4.1	U	0.34	4.1
Hexachlorobutadiene	4.1	U	0.21	4.1
Hexachlorocyclopentadiene	4.1	U	0.36	4.1
Hexachloroethane	4.1	U	0.38	4.1
Indeno[1,2,3-cd]pyrene	0.92	J	0.29	4.1
Isophorone	4.1	U	0.32	4.1
2-Methylnaphthalene	4.1	U	0.28	4.1
Naphthalene	0.38	J	0.31	4.1
2-Nitroaniline	4.1	U	0.35	4.1
3-Nitroaniline	4.1	U	0.24	4.1
Nitrobenzene	4.1	U	0.29	4.1
N-Nitrosodi-n-propylamine	4.1	U	0.34	4.1

Client: STV Incorporated

Job Number: 220-9412-1
Sdg Number: 220-9412

Client Sample ID: **W-EXC**

Lab Sample ID: 220-9412-2
Client Matrix: Water

Date Sampled: 06/19/2009 1000
Date Received: 06/20/2009 0748

8270C Semivolatile Compounds by Gas Chromatography/Mass Spectrometry (GC/MS)

Method: 8270C
Preparation: 3510C
Dilution: 1.0
Date Analyzed: 06/22/2009 1107
Date Prepared: 06/20/2009 1317

Analysis Batch: 220-28334
Prep Batch: 220-28305

Instrument ID: HP 6890/5975
Lab File ID: A5732.D
Initial Weight/Volume: 970 mL
Final Weight/Volume: 1 mL
Injection Volume: 1.0 uL

Analyte	Result (ug/L)	Qualifier	MDL	RL
N-Nitrosodiphenylamine	4.1	U	0.34	4.1
Phenanthrene	1.4	J	0.29	4.1
Pyrene	2.2	J	0.34	4.1
1,2,4-Trichlorobenzene	4.1	U	0.37	4.1
4-Chloro-3-methylphenol	5.2	U	0.35	5.2
2-Chlorophenol	4.1	U	0.24	4.1
2-Methylphenol	4.1	U	0.25	4.1
4-Methylphenol	4.1	U	0.30	4.1
2,4-Dichlorophenol	4.1	U	0.34	4.1
2,4-Dimethylphenol	4.1	U	0.34	4.1
2,4-Dinitrophenol	26	U	0.44	26
4,6-Dinitro-2-methylphenol	26	U	1.9	26
2-Nitrophenol	4.1	U	0.28	4.1
4-Nitrophenol	10	U	1.5	10
Pentachlorophenol	26	U	0.32	26
Phenol	4.1	U	0.20	4.1
2,4,5-Trichlorophenol	10	U	0.29	10
2,4,6-Trichlorophenol	4.1	U	0.38	4.1
Benzyl alcohol	4.1	U	0.42	4.1
4-Nitroaniline	4.1	U	0.21	4.1
2,2'-oxybis[1-chloropropane]	4.1	U	0.26	4.1

Surrogate	%Rec	Acceptance Limits
2-Fluorobiphenyl	73	39 - 120
2-Fluorophenol	37	13 - 120
2,4,6-Tribromophenol	66	36 - 120
Nitrobenzene-d5	71	40 - 120
Phenol-d5	29	10 - 120
Terphenyl-d14	72	10 - 120

Client: STV Incorporated

Job Number: 220-9412-1
Sdg Number: 220-9412

Client Sample ID: S-1

Lab Sample ID: 220-9412-3
Client Matrix: Solid

Date Sampled: 06/19/2009 1045
Date Received: 06/20/2009 0748

8270C Semivolatile Compounds by Gas Chromatography/Mass Spectrometry (GC/MS)-TCLP

Method: 8270C
Preparation: 3510C
Dilution: 1.0
Date Analyzed: 06/24/2009 1523
Date Prepared: 06/24/2009 0907
Date Leached: 06/22/2009 1600

Analysis Batch: 220-28470
Prep Batch: 220-28419
Leachate Batch: 220-28369

Instrument ID: HP 6890/5975
Lab File ID: A5794.D
Initial Weight/Volume: 250 mL
Final Weight/Volume: 0.5 mL
Injection Volume: 1.0 uL

Analyte	DryWt Corrected: N	Result (mg/L)	Qualifier	MDL	RL
1,4-Dichlorobenzene		0.020	U	0.00062	0.020
2,4-Dinitrotoluene		0.020	U	0.00080	0.020
2,4,5-Trichlorophenol		0.10	U	0.00056	0.10
2,4,6-Trichlorophenol		0.020	U	0.00074	0.020
2-Methylphenol		0.020	U	0.00048	0.020
Hexachlorobenzene		0.020	U	0.00066	0.020
Hexachlorobutadiene		0.020	U	0.00040	0.020
Hexachloroethane		0.020	U	0.00074	0.020
Nitrobenzene		0.020	U	0.00056	0.020
Pentachlorophenol		0.10	U	0.00062	0.10
Pyridine		0.040	U	0.0077	0.040
4-Methylphenol		0.020	U	0.00058	0.020

Surrogate	%Rec	Acceptance Limits
2,4,6-Tribromophenol	86	29 - 126
2-Fluorobiphenyl	64	43 - 116
2-Fluorophenol	60	21 - 97
Nitrobenzene-d5	68	38 - 113
Terphenyl-d14	92	10 - 119
Phenol-d5	57	18 - 97

Client: STV Incorporated

Job Number: 220-9412-1
Sdg Number: 220-9412

Client Sample ID: S-1

Lab Sample ID: 220-9412-3
Client Matrix: Solid
% Moisture: 56.4

Date Sampled: 06/19/2009 1045
Date Received: 06/20/2009 0748

8270C Semivolatile Compounds by Gas Chromatography/Mass Spectrometry (GC/MS)

Method: 8270C
Preparation: 3541
Dilution: 20
Date Analyzed: 06/23/2009 1228
Date Prepared: 06/20/2009 1110

Analysis Batch: 220-28390
Prep Batch: 220-28293

Instrument ID: HP 6890/5973 GC/MS
Lab File ID: Z11432.D
Initial Weight/Volume: 15.19 g
Final Weight/Volume: 1 mL
Injection Volume: 1.0 uL

Analyte	DryWt Corrected: Y	Result (ug/Kg)	Qualifier	MDL	RL
Acenaphthene		2000	J	720	12000
Acenaphthylene		12000	U	600	12000
Anthracene		5000	J	480	12000
Benzo[a]anthracene		6200	J	430	12000
Benzo[a]pyrene		6400	J	330	12000
Benzo[b]fluoranthene		5000	J	330	12000
Benzo[g,h,i]perylene		11000	J	800	12000
Benzo[k]fluoranthene		1900	J	1100	12000
Bis(2-chloroethoxy)methane		12000	U	570	12000
Bis(2-chloroethyl)ether		12000	U	630	12000
Bis(2-ethylhexyl) phthalate		130000		1200	12000
Butyl benzyl phthalate		12000	U	680	12000
Carbazole		12000	U	680	12000
Chrysene		6900	J	900	12000
Di-n-butyl phthalate		12000	U	1800	12000
Di-n-octyl phthalate		12000	U	690	12000
4-Bromophenyl phenyl ether		12000	U	790	12000
4-Chloroaniline		12000	U	2000	12000
2-Chloronaphthalene		12000	U	520	12000
4-Chlorophenyl phenyl ether		12000	U	900	12000
Dibenz(a,h)anthracene		11000	J	960	12000
Dibenzofuran		1500	J	860	12000
Diethyl phthalate		12000	U	1200	12000
Dimethyl phthalate		12000	U	700	12000
1,2-Dichlorobenzene		12000	U	720	12000
1,3-Dichlorobenzene		12000	U	610	12000
1,4-Dichlorobenzene		12000	U	720	12000
3,3'-Dichlorobenzidine		30000	U	2500	30000
2,4-Dinitrotoluene		12000	U	970	12000
2,6-Dinitrotoluene		12000	U	360	12000
Fluoranthene		12000	J	610	12000
Fluorene		2800	J	730	12000
Hexachlorobenzene		12000	U	850	12000
Hexachlorobutadiene		12000	U	940	12000
Hexachlorocyclopentadiene		30000	U	5700	30000
Hexachloroethane		12000	U	700	12000
Indeno[1,2,3-cd]pyrene		14000		790	12000
Isophorone		12000	U	670	12000
2-Methylnaphthalene		6000	J	350	12000
Naphthalene		3300	J	630	12000
2-Nitroaniline		77000	U	740	77000
3-Nitroaniline		77000	U	390	77000
Nitrobenzene		12000	U	780	12000
N-Nitrosodi-n-propylamine		12000	U	820	12000

Client: STV Incorporated

Job Number: 220-9412-1
Sdg Number: 220-9412

Client Sample ID: S-1

Lab Sample ID: 220-9412-3
Client Matrix: Solid % Moisture: 56.4

Date Sampled: 06/19/2009 1045
Date Received: 06/20/2009 0748

8270C Semivolatile Compounds by Gas Chromatography/Mass Spectrometry (GC/MS)

Method: 8270C
Preparation: 3541
Dilution: 20
Date Analyzed: 06/23/2009 1228
Date Prepared: 06/20/2009 1110

Analysis Batch: 220-28390
Prep Batch: 220-28293

Instrument ID: HP 6890/5973 GC/MS
Lab File ID: Z11432.D
Initial Weight/Volume: 15.19 g
Final Weight/Volume: 1 mL
Injection Volume: 1.0 uL

Analyte	DryWt Corrected: Y Result (ug/Kg)	Qualifier	MDL	RL
N-Nitrosodiphenylamine	12000	U	690	12000
Phenanthrene	14000		600	12000
Pyrene	19000		570	12000
1,2,4-Trichlorobenzene	12000	U	800	12000
4-Chloro-3-methylphenol	12000	U	500	12000
2-Chlorophenol	12000	U	710	12000
2-Methylphenol	12000	U	730	12000
4-Methylphenol	12000	U	800	12000
2,4-Dichlorophenol	12000	U	650	12000
2,4-Dimethylphenol	12000	U	590	12000
2,4-Dinitrophenol	77000	U *	3700	77000
4,6-Dinitro-2-methylphenol	77000	U *	5200	77000
2-Nitrophenol	12000	U	770	12000
4-Nitrophenol	77000	U	920	77000
Pentachlorophenol	77000	U	7400	77000
Phenol	12000	U	810	12000
2,4,5-Trichlorophenol	77000	U	620	77000
2,4,6-Trichlorophenol	12000	U	330	12000
Benzyl alcohol	12000	U	1200	12000
4-Nitroaniline	12000	U	940	12000
2,2'-oxybis[1-chloropropane]	12000	U	630	12000

Surrogate	%Rec	Acceptance Limits
2-Fluorobiphenyl	92	41 - 120
2-Fluorophenol	80	34 - 120
2,4,6-Tribromophenol	94	37 - 120
Nitrobenzene-d5	93	38 - 120
Phenol-d5	95	36 - 120
Terphenyl-d14	87	32 - 125

Client: STV Incorporated

Job Number: 220-9412-1
Sdg Number: 220-9412

Client Sample ID: **S-2**

Lab Sample ID: 220-9412-4
Client Matrix: Solid

Date Sampled: 06/19/2009 1115
Date Received: 06/20/2009 0748

8270C Semivolatile Compounds by Gas Chromatography/Mass Spectrometry (GC/MS)-TCLP

Method: 8270C
Preparation: 3510C
Dilution: 1.0
Date Analyzed: 06/24/2009 1549
Date Prepared: 06/24/2009 0907
Date Leached: 06/22/2009 1600

Analysis Batch: 220-28470
Prep Batch: 220-28419
Leachate Batch: 220-28369

Instrument ID: HP 6890/5975
Lab File ID: A5795.D
Initial Weight/Volume: 250 mL
Final Weight/Volume: 0.5 mL
Injection Volume: 1.0 uL

Analyte	DryWt Corrected: N	Result (mg/L)	Qualifier	MDL	RL
1,4-Dichlorobenzene		0.020	U	0.00062	0.020
2,4-Dinitrotoluene		0.020	U	0.00080	0.020
2,4,5-Trichlorophenol		0.10	U	0.00056	0.10
2,4,6-Trichlorophenol		0.020	U	0.00074	0.020
2-Methylphenol		0.020	U	0.00048	0.020
Hexachlorobenzene		0.020	U	0.00066	0.020
Hexachlorobutadiene		0.020	U	0.00040	0.020
Hexachloroethane		0.020	U	0.00074	0.020
Nitrobenzene		0.020	U	0.00056	0.020
Pentachlorophenol		0.10	U	0.00062	0.10
Pyridine		0.040	U	0.0077	0.040
4-Methylphenol		0.020	U	0.00058	0.020

Surrogate	%Rec	Acceptance Limits
2,4,6-Tribromophenol	85	29 - 126
2-Fluorobiphenyl	60	43 - 116
2-Fluorophenol	54	21 - 97
Nitrobenzene-d5	64	38 - 113
Terphenyl-d14	88	10 - 119
Phenol-d5	52	18 - 97

Client: STV Incorporated

Job Number: 220-9412-1
Sdg Number: 220-9412

Client Sample ID: S-2

Lab Sample ID: 220-9412-4
Client Matrix: Solid % Moisture: 53.7

Date Sampled: 06/19/2009 1115
Date Received: 06/20/2009 0748

8270C Semivolatile Compounds by Gas Chromatography/Mass Spectrometry (GC/MS)

Method: 8270C
Preparation: 3541
Dilution: 20
Date Analyzed: 06/23/2009 1255
Date Prepared: 06/22/2009 1437

Analysis Batch: 220-28390
Prep Batch: 220-28343

Instrument ID: HP 6890/5973 GC/MS
Lab File ID: Z11433.D
Initial Weight/Volume: 15.18 g
Final Weight/Volume: 1 mL
Injection Volume: 1.0 uL

Analyte	DryWt Corrected: Y	Result (ug/Kg)	Qualifier	MDL	RL
Acenaphthene		2400	J	680	12000
Acenaphthylene		2100	J	560	12000
Anthracene		7500	J	450	12000
Benzo[a]anthracene		8900	J	410	12000
Benzo[a]pyrene		7200	J	310	12000
Benzo[b]fluoranthene		5300	J	310	12000
Benzo[g,h,i]perylene		11000	J	750	12000
Benzo[k]fluoranthene		1800	J	1000	12000
Bis(2-chloroethoxy)methane		12000	U	530	12000
Bis(2-chloroethyl)ether		12000	U	600	12000
Bis(2-ethylhexyl) phthalate		110000		1100	12000
Butyl benzyl phthalate		12000	U	640	12000
Carbazole		12000	U	640	12000
Chrysene		9200	J	850	12000
Di-n-butyl phthalate		12000	U	1700	12000
Di-n-octyl phthalate		12000	U	650	12000
4-Bromophenyl phenyl ether		12000	U	740	12000
4-Chloroaniline		12000	U	1900	12000
2-Chloronaphthalene		12000	U	490	12000
4-Chlorophenyl phenyl ether		12000	U	850	12000
Dibenz(a,h)anthracene		11000	J	910	12000
Dibenzofuran		1400	J	810	12000
Diethyl phthalate		12000	U	1200	12000
Dimethyl phthalate		12000	U	660	12000
1,2-Dichlorobenzene		12000	U	680	12000
1,3-Dichlorobenzene		12000	U	580	12000
1,4-Dichlorobenzene		12000	U	680	12000
3,3'-Dichlorobenzidine		29000	U	2400	29000
2,4-Dinitrotoluene		12000	U	920	12000
2,6-Dinitrotoluene		12000	U	340	12000
Fluoranthene		15000		570	12000
Fluorene		1700	J	690	12000
Hexachlorobenzene		12000	U	800	12000
Hexachlorobutadiene		12000	U	890	12000
Hexachlorocyclopentadiene		29000	U	5400	29000
Hexachloroethane		12000	U	660	12000
Indeno[1,2,3-cd]pyrene		14000		750	12000
Isophorone		12000	U	640	12000
2-Methylnaphthalene		2200	J	330	12000
Naphthalene		2900	J	600	12000
2-Nitroaniline		73000	U	700	73000
3-Nitroaniline		73000	U	370	73000
Nitrobenzene		12000	U	730	12000
N-Nitrosodi-n-propylamine		12000	U	780	12000

Client: STV Incorporated

Job Number: 220-9412-1
Sdg Number: 220-9412

Client Sample ID: S-2

Lab Sample ID: 220-9412-4
Client Matrix: Solid % Moisture: 53.7

Date Sampled: 06/19/2009 1115
Date Received: 06/20/2009 0748

8270C Semivolatile Compounds by Gas Chromatography/Mass Spectrometry (GC/MS)

Method: 8270C
Preparation: 3541
Dilution: 20
Date Analyzed: 06/23/2009 1255
Date Prepared: 06/22/2009 1437

Analysis Batch: 220-28390
Prep Batch: 220-28343

Instrument ID: HP 6890/5973 GC/MS
Lab File ID: Z11433.D
Initial Weight/Volume: 15.18 g
Final Weight/Volume: 1 mL
Injection Volume: 1.0 uL

Analyte	DryWt Corrected: Y	Result (ug/Kg)	Qualifier	MDL	RL
N-Nitrosodiphenylamine		12000	U	650	12000
Phenanthrene		8700	J	570	12000
Pyrene		21000		540	12000
1,2,4-Trichlorobenzene		12000	U	760	12000
4-Chloro-3-methylphenol		12000	U	470	12000
2-Chlorophenol		12000	U	670	12000
2-Methylphenol		12000	U	690	12000
4-Methylphenol		12000	U	760	12000
2,4-Dichlorophenol		12000	U	610	12000
2,4-Dimethylphenol		12000	U	560	12000
2,4-Dinitrophenol		73000	U	3500	73000
4,6-Dinitro-2-methylphenol		73000	U	5000	73000
2-Nitrophenol		12000	U	730	12000
4-Nitrophenol		73000	U	870	73000
Pentachlorophenol		73000	U	7000	73000
Phenol		12000	U	760	12000
2,4,5-Trichlorophenol		73000	U	580	73000
2,4,6-Trichlorophenol		12000	U	320	12000
Benzyl alcohol		12000	U	1100	12000
4-Nitroaniline		12000	U	880	12000
2,2'-oxybis[1-chloropropane]		12000	U	600	12000

Surrogate	%Rec	Acceptance Limits
2-Fluorobiphenyl	75	41 - 120
2-Fluorophenol	73	34 - 120
2,4,6-Tribromophenol	83	37 - 120
Nitrobenzene-d5	67	38 - 120
Phenol-d5	74	36 - 120
Terphenyl-d14	68	32 - 125

Client: STV Incorporated

Job Number: 220-9412-1
Sdg Number: 220-9412

Client Sample ID: **W-TANK**

Lab Sample ID: 220-9412-1
Client Matrix: Water

Date Sampled: 06/19/2009 1030
Date Received: 06/20/2009 0748

8015B Gasoline Range Organics - (GC)

Method: 8015B
Preparation: 5030B
Dilution: 1.0
Date Analyzed: 06/25/2009 1843
Date Prepared: 06/25/2009 1843

Analysis Batch: 680-141418

Instrument ID: GC Volatiles - W FID1
Lab File ID: W062507.D
Initial Weight/Volume: 20 mL
Final Weight/Volume: 20 mL
Injection Volume:
Column ID: PRIMARY

Analyte	Result (mg/L)	Qualifier	MDL	RL
Gasoline Range Organics (GRO)-C6-C10	0.018	J	0.011	0.050

Surrogate	%Rec	Acceptance Limits
a,a,a-Trifluorotoluene	98	66 - 125

Client: STV Incorporated

Job Number: 220-9412-1
Sdg Number: 220-9412

Client Sample ID: **W-EXC**

Lab Sample ID: 220-9412-2
Client Matrix: Water

Date Sampled: 06/19/2009 1000
Date Received: 06/20/2009 0748

8015B Gasoline Range Organics - (GC)

Method: 8015B
Preparation: 5030B
Dilution: 1.0
Date Analyzed: 06/25/2009 1910
Date Prepared: 06/25/2009 1910

Analysis Batch: 680-141418

Instrument ID: GC Volatiles - W FID1
Lab File ID: W062508.D
Initial Weight/Volume: 20 mL
Final Weight/Volume: 20 mL
Injection Volume:
Column ID: PRIMARY

Analyte	Result (mg/L)	Qualifier	MDL	RL
Gasoline Range Organics (GRO)-C6-C10	0.050	U	0.011	0.050

Surrogate	%Rec	Acceptance Limits
a,a,a-Trifluorotoluene	100	66 - 125

Client: STV Incorporated

Job Number: 220-9412-1
Sdg Number: 220-9412

Client Sample ID: **S-1**

Lab Sample ID: 220-9412-3
Client Matrix: Solid

% Moisture: 56.4

Date Sampled: 06/19/2009 1045
Date Received: 06/20/2009 0748

8015B Gasoline Range Organics - (GC)

Method: 8015B
Preparation: 5030A
Dilution: 20
Date Analyzed: 06/25/2009 1314
Date Prepared: 06/25/2009 1314

Analysis Batch: 680-141384

Instrument ID: GC Volatiles - W FID1
Lab File ID: W062503.D
Initial Weight/Volume: 5 mL
Final Weight/Volume: 5 mL
Injection Volume:
Column ID: PRIMARY

Analyte	DryWt Corrected: Y	Result (mg/Kg)	Qualifier	MDL	RL
Gasoline Range Organics (GRO)-C6-C10		28		0.87	11

Surrogate	%Rec	Acceptance Limits
a,a,a-Trifluorotoluene	60	53 - 121

Client: STV Incorporated

Job Number: 220-9412-1
Sdg Number: 220-9412

Client Sample ID: **S-2**

Lab Sample ID: 220-9412-4
Client Matrix: Solid

% Moisture: 53.7

Date Sampled: 06/19/2009 1115
Date Received: 06/20/2009 0748

8015B Gasoline Range Organics - (GC)

Method: 8015B
Preparation: 5030A
Dilution: 20
Date Analyzed: 06/25/2009 1338
Date Prepared: 06/25/2009 1338

Analysis Batch: 680-141384

Instrument ID: GC Volatiles - W FID1
Lab File ID: W062504.D
Initial Weight/Volume: 5 mL
Final Weight/Volume: 5 mL
Injection Volume:
Column ID: PRIMARY

Analyte	DryWt Corrected: Y	Result (mg/Kg)	Qualifier	MDL	RL
Gasoline Range Organics (GRO)-C6-C10		50		0.82	11

Surrogate	%Rec	Acceptance Limits
a,a,a-Trifluorotoluene	66	53 - 121

Client: STV Incorporated

Job Number: 220-9412-1
Sdg Number: 220-9412

Client Sample ID: **W-TANK**

Lab Sample ID: 220-9412-1
Client Matrix: Water

Date Sampled: 06/19/2009 1030
Date Received: 06/20/2009 0748

8015B Diesel Range Organics (DRO) (GC)

Method: 8015B
Preparation: 3510C
Dilution: 10
Date Analyzed: 06/25/2009 0027
Date Prepared: 06/20/2009 1314

Analysis Batch: 220-28491
Prep Batch: 220-28304

Instrument ID: HP5890 with FID/NPD
Lab File ID: C2563013.d
Initial Weight/Volume: 1000 mL
Final Weight/Volume: 1 mL
Injection Volume: 1 uL
Column ID: PRIMARY

Analyte	Result (ug/L)	Qualifier	RL	RL
Diesel Range Organics [C10-C28]	11000		5000	5000

Surrogate	%Rec	Acceptance Limits
o-Terphenyl	91	24 - 132

Client: STV Incorporated

Job Number: 220-9412-1
Sdg Number: 220-9412

Client Sample ID: **W-TANK**

Lab Sample ID: 220-9412-1
Client Matrix: Water

Date Sampled: 06/19/2009 1030
Date Received: 06/20/2009 0748

8015B Hydrocarbon Product Identification (GC)

Method: 8015B
Preparation: 3510C
Dilution: 1.0
Date Analyzed: 06/22/2009 0517
Date Prepared: 06/20/2009 1314

Analysis Batch: 220-28034
Prep Batch: 220-28304

Instrument ID: HP5890 with FID/NPD
Lab File ID: C2561438.d
Initial Weight/Volume: 1000 mL
Final Weight/Volume: 1 mL
Injection Volume: 1 uL
Column ID: PRIMARY

Surrogate	%Rec	Acceptance Limits
o-Terphenyl	126	24 - 132

Client: STV Incorporated

Job Number: 220-9412-1
Sdg Number: 220-9412

Client Sample ID: **W-EXC**

Lab Sample ID: 220-9412-2
Client Matrix: Water

Date Sampled: 06/19/2009 1000
Date Received: 06/20/2009 0748

8015B Diesel Range Organics (DRO) (GC)

Method: 8015B
Preparation: 3510C
Dilution: 1.0
Date Analyzed: 06/25/2009 0054
Date Prepared: 06/20/2009 1314

Analysis Batch: 220-28491
Prep Batch: 220-28304

Instrument ID: HP5890 with FID/NPD
Lab File ID: C2563014.d
Initial Weight/Volume: 1000 mL
Final Weight/Volume: 1 mL
Injection Volume: 1 uL
Column ID: PRIMARY

Analyte	Result (ug/L)	Qualifier	RL	RL
Diesel Range Organics [C10-C28]	890		500	500

Surrogate	%Rec	Acceptance Limits
o-Terphenyl	57	24 - 132

Client: STV Incorporated

Job Number: 220-9412-1
Sdg Number: 220-9412

Client Sample ID: **W-EXC**

Lab Sample ID: 220-9412-2
Client Matrix: Water

Date Sampled: 06/19/2009 1000
Date Received: 06/20/2009 0748

8015B Hydrocarbon Product Identification (GC)

Method: 8015B
Preparation: 3510C
Dilution: 1.0
Date Analyzed: 06/22/2009 0544
Date Prepared: 06/20/2009 1314

Analysis Batch: 220-28034
Prep Batch: 220-28304

Instrument ID: HP5890 with FID/NPD
Lab File ID: C2561439.d
Initial Weight/Volume: 1000 mL
Final Weight/Volume: 1 mL
Injection Volume: 1 uL
Column ID: PRIMARY

Surrogate	%Rec	Acceptance Limits
o-Terphenyl	62	24 - 132

Client: STV Incorporated

Job Number: 220-9412-1
Sdg Number: 220-9412

Client Sample ID: S-1

Lab Sample ID: 220-9412-3
Client Matrix: Solid

% Moisture: 56.4

Date Sampled: 06/19/2009 1045
Date Received: 06/20/2009 0748

8015B Diesel Range Organics (DRO) (GC)

Method: 8015B
Preparation: 3550B
Dilution: 25
Date Analyzed: 06/25/2009 0121
Date Prepared: 06/20/2009 1131

Analysis Batch: 220-28491
Prep Batch: 220-28294

Instrument ID: HP5890 with FID/NPD
Lab File ID: C2563015.d
Initial Weight/Volume: 30.47 g
Final Weight/Volume: 1 mL
Injection Volume: 1 uL
Column ID: PRIMARY

Analyte	DryWt Corrected: Y	Result (ug/Kg)	Qualifier	RL	RL
Diesel Range Organics [C10-C28]		5100000		960000	960000

Surrogate	%Rec		Acceptance Limits
o-Terphenyl	0	*	28 - 146

Client: STV Incorporated

Job Number: 220-9412-1
Sdg Number: 220-9412

Client Sample ID: **S-2**

Lab Sample ID: 220-9412-4
Client Matrix: Solid

% Moisture: 53.7

Date Sampled: 06/19/2009 1115
Date Received: 06/20/2009 0748

8015B Diesel Range Organics (DRO) (GC)

Method: 8015B
Preparation: 3550B
Dilution: 100
Date Analyzed: 06/25/2009 0148
Date Prepared: 06/20/2009 1131

Analysis Batch: 220-28491
Prep Batch: 220-28294

Instrument ID: HP5890 with FID/NPD
Lab File ID: C2563016.d
Initial Weight/Volume: 30.53 g
Final Weight/Volume: 1 mL
Injection Volume: 1 uL
Column ID: PRIMARY

Analyte	DryWt Corrected: Y	Result (ug/Kg)	Qualifier	RL	RL
Diesel Range Organics [C10-C28]		7000000		3600000	3600000

Surrogate	%Rec		Acceptance Limits
o-Terphenyl	0	*	28 - 146

Client: STV Incorporated

Job Number: 220-9412-1
Sdg Number: 220-9412

Client Sample ID: **S-1**

Lab Sample ID: 220-9412-3
Client Matrix: Solid

Date Sampled: 06/19/2009 1045
Date Received: 06/20/2009 0748

8081A Organochlorine Pesticides (GC)-TCLP

Method: 8081A
Preparation: 3510C
Dilution: 1.0
Date Analyzed: 06/25/2009 0143
Date Prepared: 06/23/2009 1238
Date Leached: 06/22/2009 1600

Analysis Batch: 220-28488
Prep Batch: 220-28387
Leachate Batch: 220-28369

Instrument ID: HP 6890 dual ECD
Lab File ID: C8418025.D
Initial Weight/Volume: 200 mL
Final Weight/Volume: 10 mL
Injection Volume: 1.0 uL
Column ID: PRIMARY

Analyte	DryWt Corrected: N	Result (mg/L)	Qualifier	MDL	RL
Chlordane (technical)		0.0025	U	0.00021	0.0025
Endrin		0.00050	U	0.000068	0.00050
Heptachlor		0.00025	U	0.000030	0.00025
Heptachlor epoxide		0.00025	U	0.000028	0.00025
gamma-BHC (Lindane)		0.00025	U	0.000028	0.00025
Methoxychlor		0.0025	U *	0.00041	0.0025
Toxaphene		0.012	U	0.00020	0.012

Surrogate	%Rec	Acceptance Limits
DCB Decachlorobiphenyl	70	29 - 156
Tetrachloro-m-xylene	90	53 - 144

Method: 8081A
Preparation: 3510C
Dilution: 1.0
Date Analyzed: 06/25/2009 0143
Date Prepared: 06/23/2009 1238
Date Leached: 06/22/2009 1600

Analysis Batch: 220-28488
Prep Batch: 220-28387
Leachate Batch: 220-28369

Instrument ID: HP 6890 dual ECD
Lab File ID: D8418025.D
Initial Weight/Volume: 200 mL
Final Weight/Volume: 10 mL
Injection Volume: 1.0 uL
Column ID: SECONDARY

Surrogate	%Rec	Acceptance Limits
DCB Decachlorobiphenyl	67	29 - 156
Tetrachloro-m-xylene	86	53 - 144

Client: STV Incorporated

Job Number: 220-9412-1
Sdg Number: 220-9412

Client Sample ID: **S-1**

Lab Sample ID: 220-9412-3
Client Matrix: Solid % Moisture: 56.4

Date Sampled: 06/19/2009 1045
Date Received: 06/20/2009 0748

8081A Organochlorine Pesticides (GC)

Method: 8081A
Preparation: 3550B
Dilution: 5.0
Date Analyzed: 06/23/2009 1625
Date Prepared: 06/20/2009 1207

Analysis Batch: 220-28430
Prep Batch: 220-28296

Instrument ID: HP 5890 with dual ECD
Lab File ID: D7733047.D
Initial Weight/Volume: 30.04 g
Final Weight/Volume: 10 mL
Injection Volume: 1.0 uL
Column ID: PRIMARY

Analyte	DryWt Corrected: Y	Result (ug/Kg)	Qualifier	MDL	RL
4,4'-DDD		310		6.8	38
4,4'-DDE		130		7.7	38
4,4'-DDT		410	*	9.3	38
Aldrin		6.4	J	2.1	19
alpha-BHC		19	U	2.8	19
beta-BHC		18	J	4.3	19
delta-BHC		19	U	4.2	19
Dieldrin		180		6.5	38
Endosulfan I		19	U	3.3	19
Endosulfan II		38	U	7.1	38
Endosulfan sulfate		38	U	6.8	38
Endrin		270		7.1	38
Endrin ketone		76		6.9	38
gamma-BHC (Lindane)		19	U	3.3	19
Heptachlor		41		3.6	19
Heptachlor epoxide		27		3.4	19
Methoxychlor		96	J *	42	190
Toxaphene		950	U	100	950
alpha-Chlordane		61		3.1	19
gamma-Chlordane		94		6.1	19

Surrogate	%Rec		Acceptance Limits
DCB Decachlorobiphenyl	399	*	25 - 159
Tetrachloro-m-xylene	111		24 - 154

Method: 8081A
Preparation: 3550B
Dilution: 5.0
Date Analyzed: 06/23/2009 1625
Date Prepared: 06/20/2009 1207

Analysis Batch: 220-28430
Prep Batch: 220-28296

Instrument ID: HP 5890 with dual ECD
Lab File ID: C7733047.D
Initial Weight/Volume: 30.04 g
Final Weight/Volume: 10 mL
Injection Volume: 1.0 uL
Column ID: SECONDARY

Surrogate	%Rec		Acceptance Limits
DCB Decachlorobiphenyl	379	*	25 - 159
Tetrachloro-m-xylene	108		24 - 154

Client: STV Incorporated

Job Number: 220-9412-1
Sdg Number: 220-9412

Client Sample ID: S-1

Lab Sample ID: 220-9412-3
Client Matrix: Solid

% Moisture: 56.4

Date Sampled: 06/19/2009 1045
Date Received: 06/20/2009 0748

8081A Organochlorine Pesticides (GC)

Method: 8081A
Preparation: 3550B
Dilution: 5.0
Date Analyzed: 06/23/2009 2024
Date Prepared: 06/20/2009 1207

Analysis Batch: 220-28430
Prep Batch: 220-28296

Instrument ID: HP 5890 with dual ECD
Lab File ID: D7733056.D
Initial Weight/Volume: 30.04 g
Final Weight/Volume: 10 mL
Injection Volume: 1.0 uL
Column ID: PRIMARY

Analyte	DryWt Corrected: Y	Result (ug/Kg)	Qualifier	MDL	RL
Endrin aldehyde		75		4.7	38

Client: STV Incorporated

Job Number: 220-9412-1
Sdg Number: 220-9412

Client Sample ID: **S-1**

Lab Sample ID: 220-9412-3
Client Matrix: Solid
% Moisture: 56.4
Date Sampled: 06/19/2009 1045
Date Received: 06/20/2009 0748

8081A Organochlorine Pesticides (GC)

Method: 8081A
Preparation: 3550B
Dilution: 5.0
Date Analyzed: 06/23/2009 2024
Date Prepared: 06/20/2009 1207

Analysis Batch: 220-28430
Prep Batch: 220-28296

Instrument ID: HP 5890 with dual ECD
Lab File ID: C7733056.D
Initial Weight/Volume: 30.04 g
Final Weight/Volume: 10 mL
Injection Volume: 1.0 uL
Column ID: SECONDARY

Surrogate	%Rec		Acceptance Limits
DCB Decachlorobiphenyl	280	*	25 - 159
DCB Decachlorobiphenyl	473	*	25 - 159
Tetrachloro-m-xylene	135		24 - 154
Tetrachloro-m-xylene	613	*	24 - 154

Client: STV Incorporated

Job Number: 220-9412-1
Sdg Number: 220-9412

Client Sample ID: **S-2**

Lab Sample ID: 220-9412-4
Client Matrix: Solid

Date Sampled: 06/19/2009 1115
Date Received: 06/20/2009 0748

8081A Organochlorine Pesticides (GC)-TCLP

Method: 8081A
Preparation: 3510C
Dilution: 1.0
Date Analyzed: 06/25/2009 0208
Date Prepared: 06/23/2009 1238
Date Leached: 06/22/2009 1600

Analysis Batch: 220-28488
Prep Batch: 220-28387
Leachate Batch: 220-28369

Instrument ID: HP 6890 dual ECD
Lab File ID: C8418026.D
Initial Weight/Volume: 200 mL
Final Weight/Volume: 10 mL
Injection Volume: 1.0 uL
Column ID: PRIMARY

Analyte	DryWt Corrected: N	Result (mg/L)	Qualifier	MDL	RL
Chlordane (technical)		0.0025	U	0.00021	0.0025
Endrin		0.00050	U	0.000068	0.00050
Heptachlor		0.000042	J	0.000030	0.00025
Heptachlor epoxide		0.00025	U	0.000028	0.00025
gamma-BHC (Lindane)		0.00025	U	0.000028	0.00025
Methoxychlor		0.0025	U *	0.00041	0.0025
Toxaphene		0.012	U	0.00020	0.012

Surrogate	%Rec	Acceptance Limits
DCB Decachlorobiphenyl	60	29 - 156
Tetrachloro-m-xylene	88	53 - 144

Method: 8081A
Preparation: 3510C
Dilution: 1.0
Date Analyzed: 06/25/2009 0208
Date Prepared: 06/23/2009 1238
Date Leached: 06/22/2009 1600

Analysis Batch: 220-28488
Prep Batch: 220-28387
Leachate Batch: 220-28369

Instrument ID: HP 6890 dual ECD
Lab File ID: D8418026.D
Initial Weight/Volume: 200 mL
Final Weight/Volume: 10 mL
Injection Volume: 1.0 uL
Column ID: SECONDARY

Surrogate	%Rec	Acceptance Limits
DCB Decachlorobiphenyl	59	29 - 156
Tetrachloro-m-xylene	82	53 - 144

Client: STV Incorporated

Job Number: 220-9412-1
Sdg Number: 220-9412

Client Sample ID: **S-2**

Lab Sample ID: 220-9412-4
Client Matrix: Solid % Moisture: 53.7

Date Sampled: 06/19/2009 1115
Date Received: 06/20/2009 0748

8081A Organochlorine Pesticides (GC)

Method: 8081A
Preparation: 3550B
Dilution: 2.0
Date Analyzed: 06/23/2009 2004
Date Prepared: 06/20/2009 1207

Analysis Batch: 220-28430
Prep Batch: 220-28296

Instrument ID: HP 5890 with dual ECD
Lab File ID: C7733055.D
Initial Weight/Volume: 30.29 g
Final Weight/Volume: 10 mL
Injection Volume: 1.0 uL
Column ID: PRIMARY

Analyte	DryWt Corrected: Y Result (ug/Kg)	Qualifier	MDL	RL
4,4'-DDD	120		2.5	14
4,4'-DDE	66		2.9	14
4,4'-DDT	260	*	3.5	14
Aldrin	7.3	U	0.77	7.3
alpha-BHC	3.0	J	1.0	7.3
beta-BHC	8.3		1.6	7.3
delta-BHC	7.3	U	1.6	7.3
Dieldrin	74		2.4	14
Endosulfan I	7.3	U	1.2	7.3
Endosulfan II	14	U	2.7	14
Endosulfan sulfate	14	U	2.5	14
Endrin	200		2.6	14
Endrin ketone	43		2.6	14
gamma-BHC (Lindane)	7.3	U	1.2	7.3
Heptachlor	26		1.4	7.3
Heptachlor epoxide	11		1.3	7.3
Methoxychlor	61	J *	16	73
Toxaphene	360	U	39	360
alpha-Chlordane	31		1.2	7.3
gamma-Chlordane	32		2.3	7.3

Surrogate	%Rec	Acceptance Limits
DCB Decachlorobiphenyl	107	25 - 159
Tetrachloro-m-xylene	26	24 - 154

Method: 8081A
Preparation: 3550B
Dilution: 2.0
Date Analyzed: 06/23/2009 2004
Date Prepared: 06/20/2009 1207

Analysis Batch: 220-28430
Prep Batch: 220-28296

Instrument ID: HP 5890 with dual ECD
Lab File ID: D7733055.D
Initial Weight/Volume: 30.29 g
Final Weight/Volume: 10 mL
Injection Volume: 1.0 uL
Column ID: SECONDARY

Surrogate	%Rec		Acceptance Limits
DCB Decachlorobiphenyl	82		25 - 159
Tetrachloro-m-xylene	23	*	24 - 154

Client: STV Incorporated

Job Number: 220-9412-1
Sdg Number: 220-9412

Client Sample ID: **S-2**

Lab Sample ID: 220-9412-4
Client Matrix: Solid
% Moisture: 53.7
Date Sampled: 06/19/2009 1115
Date Received: 06/20/2009 0748

8081A Organochlorine Pesticides (GC)

Method: 8081A
Preparation: 3550B
Dilution: 2.0
Date Analyzed: 06/23/2009 2044
Date Prepared: 06/20/2009 1207
Analysis Batch: 220-28430
Prep Batch: 220-28296
Instrument ID: HP 5890 with dual ECD
Lab File ID: D7733057.D
Initial Weight/Volume: 30.29 g
Final Weight/Volume: 10 mL
Injection Volume: 1.0 uL
Column ID: PRIMARY

Analyte	DryWt Corrected: Y	Result (ug/Kg)	Qualifier	MDL	RL
Endrin aldehyde		46		1.7	14

Client: STV Incorporated

Job Number: 220-9412-1
Sdg Number: 220-9412

Client Sample ID: **S-2**

Lab Sample ID:	220-9412-4			Date Sampled:	06/19/2009 1115
Client Matrix:	Solid	% Moisture:	53.7	Date Received:	06/20/2009 0748

8081A Organochlorine Pesticides (GC)

Method:	8081A	Analysis Batch: 220-28430		Instrument ID:	HP 5890 with dual ECD
Preparation:	3550B	Prep Batch: 220-28296		Lab File ID:	C7733057.D
Dilution:	2.0			Initial Weight/Volume:	30.29 g
Date Analyzed:	06/23/2009 2044			Final Weight/Volume:	10 mL
Date Prepared:	06/20/2009 1207			Injection Volume:	1.0 uL
				Column ID:	SECONDARY

Surrogate	%Rec		Acceptance Limits
DCB Decachlorobiphenyl	101		25 - 159
DCB Decachlorobiphenyl	162	*	25 - 159
Tetrachloro-m-xylene	20	*	24 - 154
Tetrachloro-m-xylene	191	*	24 - 154

Client: STV Incorporated

Job Number: 220-9412-1
Sdg Number: 220-9412

Client Sample ID: **W-TANK**

Lab Sample ID: 220-9412-1
Client Matrix: Water

Date Sampled: 06/19/2009 1030
Date Received: 06/20/2009 0748

8082 Polychlorinated Biphenyls (PCBs) by Gas Chromatography

Method: 8082
Preparation: 3510C
Dilution: 1.0
Date Analyzed: 06/22/2009 1027
Date Prepared: 06/20/2009 1308

Analysis Batch: 220-28368
Prep Batch: 220-28303

Instrument ID: HP 6890 dual ECD
Lab File ID: C9043990.D
Initial Weight/Volume: 1000 mL
Final Weight/Volume: 10 mL
Injection Volume: 1.0 uL
Column ID: PRIMARY

Analyte	Result (ug/L)	Qualifier	MDL	RL
PCB-1016	0.50	U	0.050	0.50
PCB-1221	0.50	U	0.050	0.50
PCB-1232	0.50	U	0.050	0.50
PCB-1242	1.6		0.050	0.50
PCB-1248	0.50	U	0.050	0.50
PCB-1254	2.3		0.082	0.50
PCB-1260	2.2		0.082	0.50

Surrogate	%Rec		Acceptance Limits
Tetrachloro-m-xylene	29		22 - 145
DCB Decachlorobiphenyl	26	*	29 - 135

Method: 8082
Preparation: 3510C
Dilution: 1.0
Date Analyzed: 06/22/2009 1027
Date Prepared: 06/20/2009 1308

Analysis Batch: 220-28368
Prep Batch: 220-28303

Instrument ID: HP 6890 dual ECD
Lab File ID: D9043990.D
Initial Weight/Volume: 1000 mL
Final Weight/Volume: 10 mL
Injection Volume: 1.0 uL
Column ID: SECONDARY

Surrogate	%Rec		Acceptance Limits
Tetrachloro-m-xylene	28		22 - 145
DCB Decachlorobiphenyl	24	*	29 - 135

Client: STV Incorporated

Job Number: 220-9412-1
Sdg Number: 220-9412

Client Sample ID: **W-EXC**

Lab Sample ID: 220-9412-2
Client Matrix: Water

Date Sampled: 06/19/2009 1000
Date Received: 06/20/2009 0748

8082 Polychlorinated Biphenyls (PCBs) by Gas Chromatography

Method: 8082
Preparation: 3510C
Dilution: 1.0
Date Analyzed: 06/22/2009 1046
Date Prepared: 06/20/2009 1308

Analysis Batch: 220-28368
Prep Batch: 220-28303

Instrument ID: HP 6890 dual ECD
Lab File ID: D9043991.D
Initial Weight/Volume: 1000 mL
Final Weight/Volume: 10 mL
Injection Volume: 1.0 uL
Column ID: PRIMARY

Analyte	Result (ug/L)	Qualifier	MDL	RL
PCB-1016	0.50	U	0.050	0.50
PCB-1221	0.50	U	0.050	0.50
PCB-1232	0.50	U	0.050	0.50
PCB-1242	0.50	U	0.050	0.50
PCB-1248	0.50	U	0.050	0.50
PCB-1254	0.50	U	0.082	0.50
PCB-1260	0.50	U	0.082	0.50

Surrogate	%Rec		Acceptance Limits
Tetrachloro-m-xylene	65		22 - 145
DCB Decachlorobiphenyl	27	*	29 - 135

Client: STV Incorporated

Job Number: 220-9412-1
Sdg Number: 220-9412

Client Sample ID: S-1

Lab Sample ID: 220-9412-3
Client Matrix: Solid

% Moisture: 56.4

Date Sampled: 06/19/2009 1045
Date Received: 06/20/2009 0748

8082 Polychlorinated Biphenyls (PCBs) by Gas Chromatography

Method: 8082
Preparation: 3550B
Dilution: 2.0
Date Analyzed: 06/23/2009 1241
Date Prepared: 06/22/2009 1349

Analysis Batch: 220-28393
Prep Batch: 220-28341

Instrument ID: HP 6890 dual ECD
Lab File ID: C90431051.D
Initial Weight/Volume: 30.40 g
Final Weight/Volume: 10 mL
Injection Volume: 1.0 uL
Column ID: PRIMARY

Analyte	DryWt Corrected: Y	Result (ug/Kg)	Qualifier	MDL	RL
PCB-1016		77	U	6.0	77
PCB-1221		77	U	6.0	77
PCB-1232		77	U	6.0	77
PCB-1242		590		6.0	77
PCB-1248		77	U	6.0	77
PCB-1254		520		6.5	77
PCB-1260		760		6.5	77

Surrogate	%Rec	Acceptance Limits
Tetrachloro-m-xylene	24	24 - 150
DCB Decachlorobiphenyl	84	24 - 150

Method: 8082
Preparation: 3550B
Dilution: 2.0
Date Analyzed: 06/23/2009 1241
Date Prepared: 06/22/2009 1349

Analysis Batch: 220-28393
Prep Batch: 220-28341

Instrument ID: HP 6890 dual ECD
Lab File ID: D90431051.D
Initial Weight/Volume: 30.40 g
Final Weight/Volume: 10 mL
Injection Volume: 1.0 uL
Column ID: SECONDARY

Surrogate	%Rec	Acceptance Limits
Tetrachloro-m-xylene	23	24 - 150
DCB Decachlorobiphenyl	77	24 - 150

Client: STV Incorporated

Job Number: 220-9412-1
Sdg Number: 220-9412

Client Sample ID: **S-2**

Lab Sample ID: 220-9412-4
Client Matrix: Solid % Moisture: 53.7

Date Sampled: 06/19/2009 1115
Date Received: 06/20/2009 0748

8082 Polychlorinated Biphenyls (PCBs) by Gas Chromatography

Method: 8082
Preparation: 3550B
Dilution: 5.0
Date Analyzed: 06/23/2009 1222
Date Prepared: 06/22/2009 1349

Analysis Batch: 220-28393
Prep Batch: 220-28341

Instrument ID: HP 6890 dual ECD
Lab File ID: C90431050.D
Initial Weight/Volume: 30.20 g
Final Weight/Volume: 10 mL
Injection Volume: 1.0 uL
Column ID: PRIMARY

Analyte	DryWt Corrected: Y	Result (ug/Kg)	Qualifier	MDL	RL
PCB-1016		180	U	14	180
PCB-1221		180	U	14	180
PCB-1232		180	U	14	180
PCB-1242		720		14	180
PCB-1248		180	U	14	180
PCB-1254		1100		15	180
PCB-1260		890		15	180

Surrogate	%Rec		Acceptance Limits
Tetrachloro-m-xylene	90		24 - 150
DCB Decachlorobiphenyl	190	*	24 - 150

Method: 8082
Preparation: 3550B
Dilution: 5.0
Date Analyzed: 06/23/2009 1222
Date Prepared: 06/22/2009 1349

Analysis Batch: 220-28393
Prep Batch: 220-28341

Instrument ID: HP 6890 dual ECD
Lab File ID: C90431050.D
Initial Weight/Volume: 30.20 g
Final Weight/Volume: 10 mL
Injection Volume: 1.0 uL
Column ID: SECONDARY

Surrogate	%Rec		Acceptance Limits
Tetrachloro-m-xylene	85		24 - 150
DCB Decachlorobiphenyl	188	*	24 - 150

Client: STV Incorporated

Job Number: 220-9412-1
Sdg Number: 220-9412

Client Sample ID: **S-1**

Lab Sample ID: 220-9412-3
Client Matrix: Solid

Date Sampled: 06/19/2009 1045
Date Received: 06/20/2009 0748

8151A Herbicides (GC)-TCLP

Method: 8151A
Preparation: 8151A
Dilution: 1.0
Date Analyzed: 06/26/2009 1622
Date Prepared: 06/24/2009 1009
Date Leached: 06/23/2009 1520

Analysis Batch: 680-141545
Prep Batch: 680-141206
Leachate Batch: 680-141157

Instrument ID: GC SemiVolatiles - S
Lab File ID: sf26008.d
Initial Weight/Volume: 10 mL
Final Weight/Volume: 10 mL
Injection Volume: 1 uL
Column ID: PRIMARY

Analyte	DryWt Corrected: N	Result (mg/L)	Qualifier	MDL	RL
2,4-D		0.050	U	0.050	0.050
Silvex (2,4,5-TP)		0.050	U	0.050	0.050

Surrogate	%Rec	Acceptance Limits
DCAA	104	50 - 150

Client: STV Incorporated

Job Number: 220-9412-1
Sdg Number: 220-9412

Client Sample ID: **S-1**

Lab Sample ID: 220-9412-3
Client Matrix: Solid

% Moisture: 56.4

Date Sampled: 06/19/2009 1045
Date Received: 06/20/2009 0748

8151A Herbicides (GC)

Method: 8151A
Preparation: 8151A
Dilution: 20
Date Analyzed: 06/26/2009 2121
Date Prepared: 06/23/2009 1302

Analysis Batch: 680-141545
Prep Batch: 680-141123

Instrument ID: GC SemiVolatiles - S
Lab File ID: sf26024.d
Initial Weight/Volume: 30.2 g
Final Weight/Volume: 10 mL
Injection Volume: 1 uL
Column ID: PRIMARY

Analyte	DryWt Corrected: Y	Result (ug/Kg)	Qualifier	MDL	RL
2,4-D		380	U	230	380
2,4-DB		380	U	140	380
2,4,5-T		380	U	100	380
Silvex (2,4,5-TP)		380	U	73	380
Dalapon		15000	U	130	15000
Dicamba		380	U	86	380
Dichlorprop		380	U	50	380
Dinoseb		4600	U	210	4600
MCPA		91000	U *	8600	91000
Mecoprop		91000	U	7700	91000
Pentachlorophenol		380	U	19	380

Surrogate	%Rec		Acceptance Limits
DCAA	0	D	58 - 110

Client: STV Incorporated

Job Number: 220-9412-1
Sdg Number: 220-9412

Client Sample ID: **S-2**

Lab Sample ID: 220-9412-4
Client Matrix: Solid

Date Sampled: 06/19/2009 1115
Date Received: 06/20/2009 0748

8151A Herbicides (GC)-TCLP

Method: 8151A
Preparation: 8151A
Dilution: 1.0
Date Analyzed: 06/26/2009 1641
Date Prepared: 06/24/2009 1009
Date Leached: 06/23/2009 1520

Analysis Batch: 680-141545
Prep Batch: 680-141206
Leachate Batch: 680-141157

Instrument ID: GC SemiVolatiles - S
Lab File ID: sf26009.d
Initial Weight/Volume: 10 mL
Final Weight/Volume: 10 mL
Injection Volume: 1 uL
Column ID: PRIMARY

Analyte	DryWt Corrected: N	Result (mg/L)	Qualifier	MDL	RL
2,4-D		0.050	U	0.050	0.050
Silvex (2,4,5-TP)		0.050	U	0.050	0.050

Surrogate	%Rec	Acceptance Limits
DCAA	96	50 - 150

Client: STV Incorporated

Job Number: 220-9412-1
Sdg Number: 220-9412

Client Sample ID: **S-2**

Lab Sample ID: 220-9412-4
Client Matrix: Solid

% Moisture: 53.7

Date Sampled: 06/19/2009 1115
Date Received: 06/20/2009 0748

8151A Herbicides (GC)

Method: 8151A
Preparation: 8151A
Dilution: 1.0
Date Analyzed: 06/26/2009 1834
Date Prepared: 06/23/2009 1302

Analysis Batch: 680-141545
Prep Batch: 680-141123

Instrument ID: GC SemiVolatiles - S
Lab File ID: sf26015.d
Initial Weight/Volume: 30.2 g
Final Weight/Volume: 10 mL
Injection Volume: 1 uL
Column ID: PRIMARY

Analyte	DryWt Corrected: Y	Result (ug/Kg)	Qualifier	MDL	RL
2,4-D		18	U	11	18
2,4-DB		18	U	6.4	18
2,4,5-T		18	U	4.9	18
Silvex (2,4,5-TP)		18	U	3.4	18
Dalapon		710	U	6.2	710
Dicamba		18	U	4.1	18
Dichlorprop		18	U	2.4	18
Dinoseb		210	U	9.9	210
MCPA		4300	U *	410	4300
Mecoprop		4300	U	360	4300
Pentachlorophenol		18	U	0.90	18

Surrogate	%Rec		Acceptance Limits
DCAA	1240	E *	58 - 110

Client: STV Incorporated

Job Number: 220-9412-1
Sdg Number: 220-9412

Client Sample ID: **W-TANK**

Lab Sample ID: 220-9412-1
Client Matrix: Water

Date Sampled: 06/19/2009 1030
Date Received: 06/20/2009 0748

6020 Metals (ICP/MS)

Method: 6020
Preparation: 3010A
Dilution: 5.0
Date Analyzed: 06/24/2009 1248
Date Prepared: 06/23/2009 1156

Analysis Batch: 220-28480
Prep Batch: 220-28380

Instrument ID: Agilent ICPMS
Lab File ID: N/A
Initial Weight/Volume: 100 mL
Final Weight/Volume: 500 mL

Analyte	Result (ug/L)	Qualifier	MDL	RL
Silver	12.5	U	2.5	12.5
Arsenic	25.8		2.5	12.5
Beryllium	12.5	U	2.5	12.5
Cadmium	13.1		2.5	12.5
Chromium	101		5.0	25.0
Copper	290		2.5	25.0
Nickel	126		2.5	12.5
Lead	280		2.5	12.5
Antimony	16.2	J	5.0	20.0
Selenium	25.0	U	5.0	25.0
Thallium	17.5	U	5.0	17.5
Zinc	506		12.5	125

7470A Mercury (CVAA)

Method: 7470A
Preparation: 7470A
Dilution: 1.0
Date Analyzed: 06/23/2009 1451
Date Prepared: 06/23/2009 1121

Analysis Batch: 220-28406
Prep Batch: 220-28377

Instrument ID: Perkin Elmer FIMS
Lab File ID: N/A
Initial Weight/Volume: 25 mL
Final Weight/Volume: 50 mL

Analyte	Result (ug/L)	Qualifier	MDL	RL
Mercury	0.44		0.060	0.20

Client: STV Incorporated

Job Number: 220-9412-1
Sdg Number: 220-9412

Client Sample ID: **W-EXC**

Lab Sample ID: 220-9412-2
Client Matrix: Water

Date Sampled: 06/19/2009 1000
Date Received: 06/20/2009 0748

6020 Metals (ICP/MS)

Method: 6020
Preparation: 3010A
Dilution: 5.0
Date Analyzed: 06/24/2009 1252
Date Prepared: 06/23/2009 1156

Analysis Batch: 220-28480
Prep Batch: 220-28380

Instrument ID: Agilent ICPMS
Lab File ID: N/A
Initial Weight/Volume: 100 mL
Final Weight/Volume: 500 mL

Analyte	Result (ug/L)	Qualifier	MDL	RL
Silver	12.5	U	2.5	12.5
Arsenic	7.3	J	2.5	12.5
Beryllium	12.5	U	2.5	12.5
Cadmium	12.5	U	2.5	12.5
Chromium	18.4	J	5.0	25.0
Copper	54.8		2.5	25.0
Nickel	30.0		2.5	12.5
Lead	47.0		2.5	12.5
Antimony	20.0	U	5.0	20.0
Selenium	25.0	U	5.0	25.0
Thallium	17.5	U	5.0	17.5
Zinc	103	J	12.5	125

7470A Mercury (CVAA)

Method: 7470A
Preparation: 7470A
Dilution: 1.0
Date Analyzed: 06/23/2009 1452
Date Prepared: 06/23/2009 1121

Analysis Batch: 220-28406
Prep Batch: 220-28377

Instrument ID: Perkin Elmer FIMS
Lab File ID: N/A
Initial Weight/Volume: 25 mL
Final Weight/Volume: 50 mL

Analyte	Result (ug/L)	Qualifier	MDL	RL
Mercury	0.20	U	0.060	0.20

Client: STV Incorporated

Job Number: 220-9412-1
Sdg Number: 220-9412

Client Sample ID: **S-1**

Lab Sample ID: 220-9412-3
Client Matrix: Solid

Date Sampled: 06/19/2009 1045
Date Received: 06/20/2009 0748

6010B Metals (ICP)-TCLP

Method:	6010B	Analysis Batch: 220-28513		Instrument ID:	Perkin Elmer ICP
Preparation:	3010A	Prep Batch: 220-28372		Lab File ID:	N/A
Dilution:	1.0	Leachate Batch: 220-28369		Initial Weight/Volume:	20 mL
Date Analyzed:	06/25/2009 1438			Final Weight/Volume:	50 mL
Date Prepared:	06/23/2009 1038				
Date Leached:	06/22/2009 1600				

Analyte	DryWt Corrected: N	Result (mg/L)	Qualifier	MDL	RL
Arsenic		0.064	J	0.020	0.075
Barium		0.33		0.0012	0.025
Cadmium		0.025	U	0.0050	0.025
Chromium		0.023	J	0.0025	0.025
Lead		0.075	U	0.012	0.075
Selenium		0.19	U	0.062	0.19
Silver		0.025	U	0.0012	0.025

6020 Metals (ICP/MS)

Method:	6020	Analysis Batch: 220-28480		Instrument ID:	Agilent ICPMS
Preparation:	3050B	Prep Batch: 220-28339		Lab File ID:	N/A
Dilution:	1.0			Initial Weight/Volume:	1.15 g
Date Analyzed:	06/24/2009 1331			Final Weight/Volume:	1000 mL
Date Prepared:	06/22/2009 1337				

Analyte	DryWt Corrected: Y	Result (mg/Kg)	Qualifier	MDL	RL
Silver		11.2		0.20	1.0
Arsenic		45.6		0.20	1.0
Beryllium		0.70	J	0.30	1.0
Cadmium		51.6		0.20	1.0
Chromium		342		0.40	2.0
Copper		974		0.20	2.0
Nickel		392		0.20	1.0
Lead		607		0.20	1.0
Antimony		8.5		0.40	1.6
Selenium		8.8		0.60	2.0
Thallium		0.56	J	0.40	1.4
Zinc		1350		1.0	10

Client: STV Incorporated

Job Number: 220-9412-1
Sdg Number: 220-9412

Client Sample ID: S-1

Lab Sample ID: 220-9412-3
Client Matrix: Solid

Date Sampled: 06/19/2009 1045
Date Received: 06/20/2009 0748

7470A Mercury (CVAA)-TCLP

Method: 7470A
Preparation: 7470A
Dilution: 1.0
Date Analyzed: 06/23/2009 1515
Date Prepared: 06/23/2009 1121
Date Leached: 06/22/2009 1600

Analysis Batch: 220-28406
Prep Batch: 220-28377
Leachate Batch: 220-28369

Instrument ID: Perkin Elmer FIMS
Lab File ID: N/A
Initial Weight/Volume: 5 mL
Final Weight/Volume: 50 mL

Analyte	DryWt Corrected: N	Result (mg/L)	Qualifier	MDL	RL
Mercury		0.0020	U	0.0010	0.0020

7471A Mercury (CVAA)

Method: 7471A
Preparation: 7471A
Dilution: 5.0
Date Analyzed: 06/24/2009 1546
Date Prepared: 06/23/2009 1058

Analysis Batch: 220-28474
Prep Batch: 220-28373

Instrument ID: Perkin Elmer FIMS
Lab File ID: N/A
Initial Weight/Volume: 0.62 g
Final Weight/Volume: 50 mL

Analyte	DryWt Corrected: Y	Result (mg/Kg)	Qualifier	MDL	RL
Mercury		2.4		0.044	0.55

Client: STV Incorporated

Job Number: 220-9412-1
Sdg Number: 220-9412

Client Sample ID: **S-2**

Lab Sample ID: 220-9412-4
Client Matrix: Solid

Date Sampled: 06/19/2009 1115
Date Received: 06/20/2009 0748

6010B Metals (ICP)-TCLP

Method:	6010B	Analysis Batch: 220-28513		Instrument ID:	Perkin Elmer ICP
Preparation:	3010A	Prep Batch: 220-28372		Lab File ID:	N/A
Dilution:	1.0	Leachate Batch: 220-28369		Initial Weight/Volume:	20 mL
Date Analyzed:	06/25/2009 1441			Final Weight/Volume:	50 mL
Date Prepared:	06/23/2009 1038				
Date Leached:	06/22/2009 1600				

Analyte	DryWt Corrected: N	Result (mg/L)	Qualifier	MDL	RL
Arsenic		0.075	U	0.020	0.075
Barium		0.34		0.0012	0.025
Cadmium		0.025	U	0.0050	0.025
Chromium		0.038		0.0025	0.025
Lead		0.075	U	0.012	0.075
Selenium		0.19	U	0.062	0.19
Silver		0.025	U	0.0012	0.025

6020 Metals (ICP/MS)

Method:	6020	Analysis Batch: 220-28480		Instrument ID:	Agilent ICPMS
Preparation:	3050B	Prep Batch: 220-28339		Lab File ID:	N/A
Dilution:	1.0			Initial Weight/Volume:	1.45 g
Date Analyzed:	06/24/2009 1348			Final Weight/Volume:	1000 mL
Date Prepared:	06/22/2009 1337				

Analyte	DryWt Corrected: Y	Result (mg/Kg)	Qualifier	MDL	RL
Silver		19.5		0.15	0.74
Arsenic		34.0		0.15	0.74
Beryllium		0.80		0.22	0.74
Cadmium		104		0.15	0.74
Chromium		530		0.30	1.5
Copper		1450		0.15	1.5
Nickel		337		0.15	0.74
Lead		1370		0.15	0.74
Antimony		7.3		0.30	1.2
Selenium		5.0		0.45	1.5
Thallium		0.31	J	0.30	1.0
Zinc		2240		0.74	7.4

Client: STV Incorporated

Job Number: 220-9412-1
Sdg Number: 220-9412

Client Sample ID: **S-2**

Lab Sample ID: 220-9412-4
Client Matrix: Solid

Date Sampled: 06/19/2009 1115
Date Received: 06/20/2009 0748

7470A Mercury (CVAA)-TCLP

Method:	7470A	Analysis Batch: 220-28406		Instrument ID:	Perkin Elmer FIMS
Preparation:	7470A	Prep Batch: 220-28377		Lab File ID:	N/A
Dilution:	1.0	Leachate Batch: 220-28369		Initial Weight/Volume:	5 mL
Date Analyzed:	06/23/2009 1516			Final Weight/Volume:	50 mL
Date Prepared:	06/23/2009 1121				
Date Leached:	06/22/2009 1600				

Analyte	DryWt Corrected: N	Result (mg/L)	Qualifier	MDL	RL
Mercury		0.0020	U	0.0010	0.0020

7471A Mercury (CVAA)

Method:	7471A	Analysis Batch: 220-28474		Instrument ID:	Perkin Elmer FIMS
Preparation:	7471A	Prep Batch: 220-28373		Lab File ID:	N/A
Dilution:	5.0			Initial Weight/Volume:	0.60 g
Date Analyzed:	06/24/2009 1547			Final Weight/Volume:	50 mL
Date Prepared:	06/23/2009 1058				

Analyte	DryWt Corrected: Y	Result (mg/Kg)	Qualifier	MDL	RL
Mercury		2.6		0.043	0.54

General Chemistry

Client Sample ID: **S-1**

Lab Sample ID: 220-9412-3
Client Matrix: Solid

% Moisture: 56.4

Date Sampled: 06/19/2009 1045
Date Received: 06/20/2009 0748

Analyte	Result	Qual	Units	MDL	RL	Dil	Method
Chromium, hexavalent	2.2	U	mg/Kg	0.24	2.2	1.0	7196A
	Anly Batch: 680-141487	Date Analyzed		06/26/2009 1319		DryWt Corrected: Y	
	Prep Batch: 680-141389	Date Prepared:		06/25/2009 1528			

Analyte	Result	Qual	Units	RL	RL	Dil	Method
Ignitability	neg		mm/sec	2.2	2.2	1.0	1030
	Anly Batch: 220-28346	Date Analyzed		06/22/2009 1446		DryWt Corrected: N	
Temperature	1890		Fahrenheit	1.00	1.00	1.0	1030
	Anly Batch: 220-28346	Date Analyzed		06/22/2009 1446		DryWt Corrected: N	
Cyanide, Reactive	0.50	U	mg/Kg	0.50	0.50	1.0	9012
	Anly Batch: 220-28401	Date Analyzed		06/23/2009 1344		DryWt Corrected: N	
	Prep Batch: 220-28376	Date Prepared:		06/22/2009 1425			
Sulfide, Reactive	372		mg/Kg	20.0	20.0	1.0	9034
	Anly Batch: 220-28438	Date Analyzed		06/24/2009 1042		DryWt Corrected: N	
	Prep Batch: 220-28436	Date Prepared:		06/22/2009 1505			
pH	8.52	HF	SU	0.100	0.100	1.0	9045C
	Anly Batch: 220-28443	Date Analyzed		06/24/2009 1213		DryWt Corrected: N	
Percent Moisture	56.4		%	0.10	0.10	1.0	Moisture
	Anly Batch: 220-28326	Date Analyzed		06/22/2009 1138			
Percent Solids	43.6		%	0.10	0.10	1.0	Moisture
	Anly Batch: 220-28326	Date Analyzed		06/22/2009 1138			

General Chemistry

Client Sample ID: S-2

Lab Sample ID: 220-9412-4
Client Matrix: Solid

% Moisture: 53.7

Date Sampled: 06/19/2009 1115
Date Received: 06/20/2009 0748

Analyte	Result	Qual	Units	MDL	RL	Dil	Method
Chromium, hexavalent	2.1	U	mg/Kg	0.23	2.1	1.0	7196A
	Anly Batch: 680-141487	Date Analyzed		06/26/2009 1319		DryWt Corrected: Y	
	Prep Batch: 680-141389	Date Prepared:		06/25/2009 1528			

Analyte	Result	Qual	Units	RL	RL	Dil	Method
Ignitability	neg		mm/sec	2.2	2.2	1.0	1030
	Anly Batch: 220-28346	Date Analyzed		06/22/2009 1448		DryWt Corrected: N	
Temperature	1890		Fahrenheit	1.00	1.00	1.0	1030
	Anly Batch: 220-28346	Date Analyzed		06/22/2009 1448		DryWt Corrected: N	
Cyanide, Reactive	0.50	U	mg/Kg	0.50	0.50	1.0	9012
	Anly Batch: 220-28401	Date Analyzed		06/23/2009 1345		DryWt Corrected: N	
	Prep Batch: 220-28376	Date Prepared:		06/22/2009 1425			
Sulfide, Reactive	644		mg/Kg	19.9	19.9	1.0	9034
	Anly Batch: 220-28438	Date Analyzed		06/24/2009 1051		DryWt Corrected: N	
	Prep Batch: 220-28436	Date Prepared:		06/22/2009 1505			
pH	8.34	HF	SU	0.100	0.100	1.0	9045C
	Anly Batch: 220-28443	Date Analyzed		06/24/2009 1219		DryWt Corrected: N	
Percent Moisture	53.7		%	0.10	0.10	1.0	Moisture
	Anly Batch: 220-28326	Date Analyzed		06/22/2009 1138			
Percent Solids	46.3		%	0.10	0.10	1.0	Moisture
	Anly Batch: 220-28326	Date Analyzed		06/22/2009 1138			

DATA REPORTING QUALIFIERS

Client: STV Incorporated

Job Number: 220-9412-1
Sdg Number: 220-9412

Lab Section	Qualifier	Description
GC/MS VOA		
	U	Analyzed for but not detected.
	J	Indicates an estimated value.
	*	LCS or LCSD exceeds the control limits
	*	Surrogate exceeds the control limit
	B	The analyte was found in an associated blank, as well as in the sample.
GC/MS Semi VOA		
	U	Analyzed for but not detected.
	J	Indicates an estimated value.
	*	LCS or LCSD exceeds the control limits
GC VOA		
	U	Analyzed for but not detected.
	J	Indicates an estimated value.
GC Semi VOA		
	U	Analyzed for but not detected.
	E	Compound concentration exceeds the upper level of the calibration range of the instrument for that specific analysis.
	*	Duplicate RPD exceeds control limits
	J	Indicates an estimated value.
	*	LCS or LCSD exceeds the control limits
	*	MS or MSD exceeds the control limits
	*	Surrogate exceeds the control limit
	D	The reported value is from a dilution.

DATA REPORTING QUALIFIERS

Client: STV Incorporated

Job Number: 220-9412-1
Sdg Number: 220-9412

Lab Section	Qualifier	Description
Metals		
	U	Indicates analyzed for but not detected.
	4	MS, MSD: The analyte present in the original sample is 4 times greater than the matrix spike concentration; therefore, control limits are not applicable.
	J	Sample result is greater than the MDL but below the CRDL
	N	Spiked sample recovery is not within control limits.
General Chemistry		
	HF	Field parameter with a holding time of 15 minutes
	U	Indicates analyzed for but not detected.

Chain of Custody Record

SEVERN TRENT **STL**
Severn Trent Laboratories, Inc.

9412

STL-4124 (0901)

Client	Project Manager	Date	Chain of Custody Number
STV Inc	Mike Tumalty	6/19/09	351398
Address	**Telephone Number (Area Code)/Fax Number**	**Lab Number**	Page 1 of 1
225 Park Ave South	(212) 614-3369	per BC 6/22 JMD	

City	State	Zip Code	Site Contact	Lab Contact
New York	NY	10003	Brian Connolly	Jill

Project Name and Location (State): Borden Ave Bridge, New York

Carrier/Waybill Number:

Contract/Purchase Order/Quote No.:

Analysis (Attach list if more space is needed)

Sample I.D. No. and Description (Containers for each sample may be combined on one line)	Date	Time	Matrix: Air	Aqueous	Sed.	Soil	Containers & Preservatives: Unpres.	H2SO4	HNO3	HCl	NaOH	ZnAc/NaOH	TCL VOCs	TCL SVOCs	PCBs/Pest	Pest/Herb.	PPL METALS	CR (VI)	TCLP	TPHC = DRO/GRO Fingerprint	Fingerprint TPHC	DRO/GRO	RCRA char	Per B.C.	Special Instructions/ Conditions of Receipt
	6/19/09																								6/22/09 - JMD
1) W-Tank		1030											x	x	x		x			x					All Containers in 7.8°C cooler
2) W-Exc		1000											x	x	x		x			x					All Containers in 7.8°C cooler
3) S-1		1045											x	x	x	x	x	x	x	x	x	x	x		(KB) 6/20/09
4) S-2		1115											x	x	x	x	x	x	x	x	x	x	x		

Possible Hazard Identification: ☑ Non-Hazard ☐ Flammable ☐ Skin Irritant ☐ Poison B ☐ Unknown

Sample Disposal: ☐ Return To Client ☐ Disposal By Lab ☐ Archive For _____ Months (A fee may be assessed if samples are retained longer than 1 month)

Turn Around Time Required: ☑ 24 Hours ☐ 48 Hours ☐ 7 Days ☐ 14 Days ☐ 21 Days ☐ Other _____

QC Requirements (Specify): Samples collected by Richard Hart (516) 328-1194 if question

	Date	Time		Date	Time
1. Relinquished By: [signature]	6/19/09	3:05	1. Received By: [signature]	6/19/09	3:05
2. Relinquished By:			2. Received By: K Blocker	6/20/09	748
3. Relinquished By:			3. Received By:		

Comments: 0.6°C, 7.8°C gun #1 bags of melted ice.

PASSED RAD SCREEN

DISTRIBUTION: WHITE - Returned to Client with Report; CANARY - Stays with the Sample; PINK - Field Copy

ESTAMERICA CONNECTICUT
RESERVATIVE RECORD

Job Number:

Client:

Client Project:

Lab Number	Preservative	pH	Adjustment (mLs)	pH after Adjustment	Preservative Lot Number	Initials	Date
9412 - 01	HNO_3	<2	N/A	N/A	N/A	KB	6/20/09
02	↓	<2	↓	↓	↓	↓	↓
01	HCL	<2					
02	↓	<2					

TestAmerica - Connecticut
Internal Chain-of-Custody

220-9412
STV- Borden Ave Bridge

Trip Blank:

24 hr TAT

QC: Air:

FB:

Soil: 3-4 Water: 1-2

Date Received: 6/20/09

Sample #s: 1-4

Locations: 99D, R-11, A5, R-22

Laboratory Sample #	Signature-Sample Removal	Date	Time	Reason	Signature-Sample Return	Date	Time
1-4		6/20/09	1105	Ext.			
3-4		6/20/09	1105	Ext.		6/20/09	1710
3-4		6/20/09	1030	VOA TRIP		6/20/09	1700
3-4	MC	6/22	12:20	MTL		6/22/09	14:20
1,2		6/22	13:30	VOA			
3-4		6-22	13:20	EXT		6/22	15:10
3-4		6-22	1515	MTL		6-22	1600
3-4		6-23	1025	MTL		6-23	1300
1-2	MC	6/23	10:55	MTL	MC	6/23	13:00
1,2		6/24/09	10:40	pH		6/24/09	12:30

Page 69 of 71

06/29/2009

TestAmerica Form# SMF02300.CT

Login Sample Receipt Check List

Client: STV Incorporated

Job Number: 220-9412-1
SDG Number: 220-9412

Login Number: 9412
Creator: Blocker, Kristina
List Number: 1

List Source: TestAmerica Connecticut

Question	T / F/ NA	Comment
Radioactivity either was not measured or, if measured, is at or below background	True	
The cooler's custody seal, if present, is intact.	True	
The cooler or samples do not appear to have been compromised or tampered with.	True	
Samples were received on ice.	True	7.8C cooler bags of melted ice/water.
Cooler Temperature is acceptable.	False	
Cooler Temperature is recorded.	True	0.6C, 7.8C
COC is present.	True	
COC is filled out in ink and legible.	True	
COC is filled out with all pertinent information.	True	
There are no discrepancies between the sample IDs on the containers and the COC.	True	
Samples are received within Holding Time.	True	
Sample containers have legible labels.	True	
Containers are not broken or leaking.	True	
Sample collection date/times are provided.	True	
Appropriate sample containers are used.	True	
Sample bottles are completely filled.	True	
There is sufficient vol. for all requested analyses, incl. any requested MS/MSDs	True	
VOA sample vials do not have headspace or bubble is <6mm (1/4") in diameter.	True	
If necessary, staff have been informed of any short hold time or quick TAT needs	True	
Multiphasic samples are not present.	True	
Samples do not require splitting or compositing.	True	
Is the Field Sampler's name present on COC?	True	

Login Sample Receipt Check List

Client: STV Incorporated

Job Number: 220-9412-1
SDG Number: 220-9412

Login Number: 9412
Creator: Daughtry, Beth
List Number: 1

List Source: TestAmerica Savannah
List Creation: 06/23/09 10:36 AM

Question	T / F/ NA	Comment
Radioactivity either was not measured or, if measured, is at or below background	N/A	
The cooler's custody seal, if present, is intact.	True	
The cooler or samples do not appear to have been compromised or tampered with.	True	
Samples were received on ice.	True	
Cooler Temperature is acceptable.	True	
Cooler Temperature is recorded.	True	
COC is present.	True	
COC is filled out in ink and legible.	True	
COC is filled out with all pertinent information.	True	
There are no discrepancies between the sample IDs on the containers and the COC.	True	
Samples are received within Holding Time.	True	
Sample containers have legible labels.	True	
Containers are not broken or leaking.	True	
Sample collection date/times are provided.	True	
Appropriate sample containers are used.	True	
Sample bottles are completely filled.	True	
There is sufficient vol. for all requested analyses, incl. any requested MS/MSDs	True	
VOA sample vials do not have headspace or bubble is <6mm (1/4") in diameter.	True	
If necessary, staff have been informed of any short hold time or quick TAT needs	True	
Multiphasic samples are not present.	N/A	
Samples do not require splitting or compositing.	N/A	
Is the Field Sampler's name present on COC?	N/A	

New York State Department of Environmental Conservation
Division of Environmental Permits, Region 2
47-40 21st Street, Long Island City, NY 11101-5407
Phone: (718) 482-4997 • **FAX:** (718) 482-4975
Website: www.dec.state.ny.us

Alexander B.
Grannis
Commissioner

May 21, 2009

George Klein, P.E.
Deputy Chief Engineer
NYCDOT
40 Worth Street, Room 1228
New York, NY 10003

Re: NYSDEC Permit application #2-6304-01440/00008
Borden Avenue Bridge West Abutment and Wingwall Reconstruction
Temporary construction dewatering discharge
ECL Article 17 -- Water Pollution Control
NOTICE OF DETERMINATION OF NO JURISDICTION

Dear Mr. Klein:

The action referenced above, as described in the jurisdictional determination request submitted on your behalf by Moretrench American Corporation dated February 23, 2009 and received March 4, 2009 and responses and clarifications dated April 9, 2009, May 14, 2009 and May 15, 2009, and assigned application number 2-6304-01440/00008 is not within the jurisdiction of the DEC under the Water Pollution Control Act (Article 17 of the Environmental Conservation Law). Therefore, an individual DEC SPDES permit is not required at this time to discharge this groundwater in the manner described in the referenced jurisdictional determination request.

The Division of Water, following a review of the submitted water sample test results, taken from a monitoring well, has determined that the groundwater at the site does not contain pollutants at levels of concern. Based on these sample results, it has been determined that no permissions or State Pollutant Discharge Elimination System permits are required from this Department for the discharge of unpolluted water from the dewatering well(s). This determination is based on the submitted sample results, and should it be determined at any time during pumping that pollutants are present, the discharge must be halted to avoid a violation of the Environmental Conservation Law and an application for an Industrial SPDES permit must be filed immediately. Please also note the following provisions:

1) The discharge shall not cause a violation of the water quality standards of the receiving waters.

2) The discharge shall not cause a substantial visible contrast to the natural conditions of the receiving waters.

3) The discharge shall not cause or contain a visible oil sheen, foam, or floating solids at any time.

4) Operations must conform with Drawing entitled "Moretrench Boreden Avenue Bridge, Drawing Number 1" dated April 23, 2009, signed and stamped by Leonard R. Guglielmo, P.E., received by NYSDEC on May 5, 2009 and Drawing entitled "50 Yard Roll-off Settling Tank Equipment Specification" dated March 27, 2009, received by NYSDEC on May 12, 2009.

5) The maximum discharge allowed under this Determination is 864,000 gallons per day.

You must, as described in your submittal, direct this discharge into the temporary 12" outfall which discharges to Dutch Kills.

Technical questions concerning this matter should be directed to Chan Chakrabarti in the Division of Water at (718) 482-4947.

Sincerely,

John F. Cryan
Regional Permit Administrator

cc: Chan Chakrabarti, NYSDEC DOW
Selvin Southwell, NYSDEC DOW
Jesselynne Krief, Marine Resources
Joe Mahon, Moretrench
Alan Marchan, STV Incorporated
John Aitken, Maracap Construction Industries, Inc.
File

New York State Department of Environmental Conservation
Division of Environmental Permits, Region 2
47-40 21st Street, Long Island City, NY 11101-5407
Phone: (718) 482-4997 • **FAX:** (718) 482-4976
Website: www.dec.state.ny.us

Alexander B
Grannis
Commissioner

May 21, 2009

George Klein, P.E.
Deputy Chief Engineer
NYCDOT
40 Worth Street, Room 1228
New York, NY 10003

Re: NYSDEC Permit application #2-6304-01440/00008
Borden Avenue Bridge West Abutment and Wingwall Reconstruction
Temporary construction dewatering discharge
ECL Article 15, Title 15 - Long Island Well
NOTICE OF PERMIT Issuance

Dear Mr. Klein:

Enclosed is your Long Island Well permit for the above referenced project. It is effective beginning May 21, 2009 and expires on December 31, 2009.

Please read all permit conditions carefully. All permit documents must be available at the site upon request by Department staff and must be distributed to and understood by personnel responsible for the proper operation of the facility and compliance with the permit requirements. Any violation of these permit conditions constitutes a violation of the Environmental Conservation Law.

Please note that the maximum withdrawal rate authorized by this permit is 864,000 gallons per day.

Please note Special Condition #9 - Withdrawal not Authorized until Permit #2-6304-01440/00004 modified

If you have any questions regarding this permit, you may contact the Division of Environmental Permits at the above address. Please refer to the above referenced numbers when you are corresponding with this office or when you are applying to renew or modify this permit.

Sincerely,

Stephen A. Watts III
Environmental Program Specialist II

cc: Chan Chakrabarti, NYSDEC DOW
Selvin Southwell, NYSDEC DOW
Jesselynne Krief, Marine Resources
Joe Mahon, Moretrench
Alan Marchan, STV Incorporated
John Aitken, Maracap Construction Industries, Inc.
File

NEW YORK STATE DEPARTMENT OF ENVIRONMENTAL CONSERVATION
Facility DEC ID 2-6304-01440

PERMIT

Under the Environmental Conservation Law (ECL)

Permittee and Facility Information

Permit Issued To:
NYC DEPT OF TRANSPORTATION
40 WORTH ST 11TH FL
NEW YORK, NY 10003
(212) 676-0557

Facility:
NYC DOT - BORDEN AVE BRIDGE
BORDEN AVE BTWN 25TH & 27TH ST
LONG ISLAND CITY, NY 11101

Facility Location: in QUEENS COUNTY
Facility Principal Reference Point: NYTM-E: 589.262 NYTM-N: 4510.311
Latitude: 41°44'20.1" Longitude: 74°56'34.1"

Authorized Activity: Install and operate a temporary dewatering system to facilitate reconstruction of the west abutment and wingwalls of the Borden Avenue Bridge over the Dutch Kills in Queens with a maximum withdrawal of 864,000 gallons per day. Pumped groundwater is to be directed to a temporary 12" outfall into Dutch Kills.

Permit Authorizations

Long Island Well - Under Article 15, Title 15
Permit ID 2-6304-01440/00007
New Permit Effective Date: 5/21/2009 Expiration Date: 12/31/2009

NYSDEC Approval

By acceptance of this permit, the permittee agrees that the permit is contingent upon strict compliance with the ECL, all applicable regulations, and all conditions included as part of this permit.

Permit Administrator: JOHN F CRYAN, Regional Permit Administrator
Address: NYSDEC REGION 2 HEADQUARTERS
47-40 21ST ST
LONG ISLAND CITY, NY 11101 -5407

Authorized Signature: John F. Cryan Date 05/21/09

Permit Components

LONG ISLAND WELL PERMIT CONDITIONS

GENERAL CONDITIONS, APPLY TO ALL AUTHORIZED PERMITS

NOTIFICATION OF OTHER PERMITTEE OBLIGATIONS

LONG ISLAND WELL PERMIT CONDITIONS

1. **Conformance With Plans** All activities authorized by this permit must be in strict conformance with the approved plans submitted by the applicant or applicant's agent as part of the permit application. Such approved plans were prepared by Moretrench American for NYCDOT.

2. **Conformance with Plans - Addenda** In addition to plans referenced in the Condition titled "Conformance with Plans," the activities authorized by this permit must be in strict conformance with the following approved plans and/or submissions made as part of the permit application:

A. Drawing entitled "Moretrench Boreden Avenue Bridge, Drawing Number 1" dated April 23, 2009, signed and stamped by Leonard R. Guglielmo, P.E., received by NYSDEC on May 5, 2009;

B. Drawing entitled "50 Yard Roll-off Settling Tank Equipment Specification" dated March 27, 2009, received by NYSDEC on May 12, 2009.

C. Region 2 Long Island Well Dewatering System Detail Sheet, signed by T.Aleksander Patrick on 5/5/09, received by NYSDEC on 5/5/09.

D. Application package dated February 23, 2009, received March 4, 2009 and responses to Incomplete Notices dated April 19, 2009, May 5, 2009 and May 8, 2009.

3. **Dewatering Wells, Pumps, Pump Capacities and Maximum Withdrawal** This permit authorizes the following:

- **Dewatering Wells - 12**
- **Installed Pumps - 12 (Only 6 of 12 pumps are authorized to operate simultaneously)**
- **Pump Capacity - 100 GPM (10 HP) pumps** (Pump of lesser capacity may be substituted at permittee's discretion.)
- **Maximum Withdrawal - 864,000 gallons per day**

4. **Daily Pump Log** A daily pump log must be kept at the project site at all times. The pump log must be made available to authorized representatives of the Department during pumping operations.

5. **Handling of Contaminated Groundwater** The permittee is fully responsible for proper handling and all costs associated with the proper sampling, treatment and disposal of any contaminated groundwater.

6. **Well Driller Registration** The dewatering operation shall be performed by Well Drillers duly registered in accordance with Section 15-1525 of the Environmental Conservation Law of the State of New York.

7. **Notice of Intent to Commence Work** At least five (5) days prior to commencement of the permitted activity, Permittee must complete and submit the attached "Notice of Intent to Commence Work" to NYSDEC Division of Water, 47-40 21st Street, Long Island City, NY 11101 (Attention: Chan Chakrabarti).

8. **Posting of NYSDEC Permit Sign** The attached NYSDEC permit sign shall be posted, protected from the weather, in a conspicuous outdoor location at the project site. This sign is to be posted for the duration of work authorized by this permit.

9. **Withdrawal not Authorized until Permit #2-6304-01440/00004 modified** This permit does not authorize the withdrawal or discharge of groundwater until Tidal Wetland permit 2-6304-01440/00004 is modified.

GENERAL CONDITIONS - Apply to ALL Authorized Permits:

1. **Facility Inspection by The Department** The permitted site or facility, including relevant records, is subject to inspection at reasonable hours and intervals by an authorized representative of the Department of Environmental Conservation (the Department) to determine whether the permittee is complying with this permit and the ECL. Such representative may order the work suspended pursuant to ECL 71- 0301 and SAPA 401(3).

The permittee shall provide a person to accompany the Department's representative during an inspection to the permit area when requested by the Department.

A copy of this permit, including all referenced maps, drawings and special conditions, must be available for inspection by the Department at all times at the project site or facility. Failure to produce a copy of the permit upon request by a Department representative is a violation of this permit.

2. **Relationship of this Permit to Other Department Orders and Determinations** Unless expressly provided for by the Department, issuance of this permit does not modify, supersede or rescind any order or determination previously issued by the Department or any of the terms, conditions or requirements contained in such order or determination.

3. **Applications For Permit Renewals, Modifications or Transfers** The permittee must submit a separate written application to the Department for permit renewal, modification or transfer of this permit. Such application must include any forms or supplemental information the Department requires. Any renewal, modification or transfer granted by the Department must be in writing. Submission of applications for permit renewal, modification or transfer are to be submitted to:

Regional Permit Administrator
NYSDEC REGION 2 HEADQUARTERS
47-40 21ST ST
LONG ISLAND CITY, NY11101 -5407

4. **Submission of Renewal Application** The permittee must submit a renewal application at least 30 days before permit expiration for the following permit authorizations: Long Island Well.

5. **Permit Modifications, Suspensions and Revocations by the Department** The Department reserves the right to modify, suspend or revoke this permit. The grounds for modification, suspension or revocation include:

a. materially false or inaccurate statements in the permit application or supporting papers;

b. failure by the permittee to comply with any terms or conditions of the permit;

c. exceeding the scope of the project as described in the permit application;

d. newly discovered material information or a material change in environmental conditions, relevant technology or applicable law or regulations since the issuance of the existing permit;

e. noncompliance with previously issued permit conditions, orders of the commissioner, any provisions of the Environmental Conservation Law or regulations of the Department related to the permitted activity.

6. Permit Transfer Permits are transferrable unless specifically prohibited by statute, regulation or another permit condition. Applications for permit transfer should be submitted prior to actual transfer of ownership.

NOTIFICATION OF OTHER PERMITTEE OBLIGATIONS

Item A: Permittee Accepts Legal Responsibility and Agrees to Indemnification
The permittee, excepting state or federal agencies, expressly agrees to indemnify and hold harmless the Department of Environmental Conservation of the State of New York, its representatives, employees, and agents ("DEC") for all claims, suits, actions, and damages, to the extent attributable to the permittee's acts or omissions in connection with the permittee's undertaking of activities in connection with, or operation and maintenance of, the facility or facilities authorized by the permit whether in compliance or not in compliance with the terms and conditions of the permit. This indemnification does not extend to any claims, suits, actions, or damages to the extent attributable to DEC's own negligent or intentional acts or omissions, or to any claims, suits, or actions naming the DEC and arising under Article 78 of the New York Civil Practice Laws and Rules or any citizen suit or civil rights provision under federal or state laws.

Item B: Permittee's Contractors to Comply with Permit
The permittee is responsible for informing its independent contractors, employees, agents and assigns of their responsibility to comply with this permit, including all special conditions while acting as the permittee's agent with respect to the permitted activities, and such persons shall be subject to the same sanctions for violations of the Environmental Conservation Law as those prescribed for the permittee.

Item C: Permittee Responsible for Obtaining Other Required Permits
The permittee is responsible for obtaining any other permits, approvals, lands, easements and rights-of-way that may be required to carry out the activities that are authorized by this permit.

Item D: No Right to Trespass or Interfere with Riparian Rights
This permit does not convey to the permittee any right to trespass upon the lands or interfere with the riparian rights of others in order to perform the permitted work nor does it authorize the impairment of any rights, title, or interest in real or personal property held or vested in a person not a party to the permit.

NOTICE OF INTENT TO COMMENCE WORK

Date: _____

Division of Water
Attn. Chan Chakrabarti
NYSDEC Region 2 Office
47-40 21st Street
Long Island City, N.Y. 11101

Re: NYSDEC Permit No. 2-6304-01440/00007
Temporary Construction Dewatering
NYCDOT - Borden Avenue Bridge

Dear Mr. Chakrabarti:

In accordance with Long Island Well Condition 7 of the referenced permit, I hereby serve notice to commence work on _____, 20____.

This is also to certify that, having read the entire permit, I am fully aware of and understand the general and Long Island Well conditions therein, and agree to comply with all such conditions. Further, I understand that prior to undertaking any modification to the permitted work, I must seek a permit modification from the NYSDEC Regional Permit Administrator.

_____
Signature of Permittee

_____
Name of Permittee (please print)

_____
Signature of Contractor

_____
Name of Contractor (please print)

_____
Street Address of Contractor

_____
City, State, & Zip Code of Contractor

_____
Telephone Number of Contractor

WARNING

The permittee and their contractor(s) (if any) are required to follow all permit conditions. Violations of the permit may lead to legal action, including the imposition of substantial monetary fines and corrective work.

cc: Steve Watts, Division of Environmental Permits

DS-20-1 (11/09) - ed

New York State
Department of Environmental Conservation

NOTICE

The Department of Environmental Conservation (DEC) has issued permit(s) pursuant to the Environmental Conservation Law for work being conducted at this site. For further information regarding the nature and extent of the approved work and any Department conditions applied to the approval, contact the Regional Permit Administrator listed below. Please refer to the permit number shown when contacting the DEC.

Permit Number 2-6304-01440/00007

Expiration Date 12/31/2009

Regional Permit Administrator

John F. Cryan
47-40 21st Street
LIC, NY 11101
(718) 482-4997

NOTE: This notice is **NOT** a permit

APPENDIX B - TEST AMERICA ANALYTICAL DATA REPORT

TestAmerica

THE LEADER IN ENVIRONMENTAL TESTING

ANALYTICAL REPORT

Job Number: 220-9412-1

SDG Number: 220-9412

Job Description: Borden Ave Bridge

For:
STV Incorporated
225 Park Avenue South
New York, NY 10003

Attention: Mr. Brian Connolly

Approved for release
Patty A Mercure
6/29/2009 1:01 PM

Designee for
Jill M Duhancik
Project Manager I
jill.duhancik@testamericainc.com
06/29/2009

The test results in this report meet all NELAP requirements unless specified within the case narrative. Pursuant to NELAP, this report may not be reproduced, except in full, without the written approval of the laboratory. All questions regarding this report should be directed to the TestAmerica Project Manager.

TestAmerica Connecticut Certifications and Approvals: CTDOH PH-047, MADEP CT023, RIDOH A43, NYDOH 10602, NY NELAP 10602, NHDES 2528, NJDEP CT410, ME DOH CT023, UT DOH 2032614458

TestAmerica Laboratories, Inc.
TestAmerica Connecticut 128 Long Hill Cross Road, Shelton, CT 06484
Tel (203) 929-8140 Fax (203) 929-8142 www.testamericainc.com

ACCREDITED IN ACCORDANCE WITH nelac

Case Narrative for Job: 220-9412-1

Client: STV Incorporated
Date: June 29, 2009

I certify that this data package is in compliance with the terms and conditions of this contract, both technically and for completeness, for other than the conditions detailed above. Release of the data contained in this hardcopy data package and in the computer-readable data submitted on diskette has been authorized by the Laboratory Manager or his designee, as verified by the following signature.

Lawrence Decker
Laboratory Director

June 29, 2009
Date

Job Narrative
220-J9412-1

Comments
No additional comments.

Receipt
Method(s) 8015B: The container label for the following samples did not match the information listed on the Chain-of-Custody (COC): S-1 (220-9412-3), S-2 (220-9412-4). The container labels list S-2 is on the container label time list 11:15 and S-1 is listed on the container cap while the COC lists ?. There are two samples a- 3 and a - 4, both times list 11:15 June 19 2009 and both labels list S-2 as the sample IDS. One cap list S-1 and the other cap list S-2.

All other samples were received in good condition within temperature requirements.

GC/MS VOA
Method(s) 8260B: Surrogate recovery for the following sample was outside control limits: S-1 (220-9412-3). Evidence of matrix interference is present; re-analysis was performed and confirmed. The first set of data was reported.

No other analytical or quality issues were noted.

GC/MS Semi VOA
Method(s) 8270C: Internal standard (ISTD) response for the following sample was outside control limits: W-TANK (220-9412-1). The sample was re-analyzed with concurring results. The original set of data has been reported.

No other analytical or quality issues were noted.

GC VOA
No analytical or quality issues were noted.

GC Semi VOA
Method(s) 8015B: The laboratory analyzes the following compounds for fingerprint analysis: #2 Fuel Oil, #4 Fuel Oil, #6 Fuel Oil, Kerosene, Gasoline, Motor Oil, and Coal Tar. The elution pattern present in the client's samples are compared to these standards to determine the best match. The carbon range for the following samples is between a #6 Fuel Oil and motor oil, however, because of differences of such magnitude, it is impossible to determine whether the unknown is a combination of the two or a completely different oil:S-1 (220-9412-3), S-2 (220-9412-4), W-EXC (220-9412-2), W-TANK (220-9412-1)

Method(s) 8081A: The capping continuing calibration verification (CCV) analyzed on 6/23/09 on GC-hp-6890-8 failed on both columns. These samples were analyzed in another bracket with concurring results.

Method(s) 8081A: The continuing calibration verification (CCV) for 6/24/09 recovered above the upper control limit. The samples associated with this CCV were non-detects for the affected analytes; therefore, the data have been reported.

No other analytical or quality issues were noted.

Metals
No analytical or quality issues were noted.

General Chemistry
Method(s) 9045C: This analysis is normally performed in the field and has a method-defined holding time of 15 minutes. All associated samples have been qualified with the "HF" flag to indicate they were performed in the laboratory outside the 15 minute timeframe.

No other analytical or quality issues were noted.

Organic Prep
No analytical or quality issues were noted.

VOA Prep
No analytical or quality issues were noted.

EXECUTIVE SUMMARY - Detections

Client: STV Incorporated

Job Number: 220-9412-1
Sdg Number: 220-9412

Lab Sample ID / Analyte	Client Sample ID	Result / Qualifier		Reporting Limit	Units	Method
220-9412-1	W-TANK					
Acetone		16	*	10	ug/L	8260B
Acenaphthene		3.6	J	17	ug/L	8270C
Acenaphthylene		2.2	J	17	ug/L	8270C
Anthracene		5.4	J	17	ug/L	8270C
Benzo[a]anthracene		8.6	J	17	ug/L	8270C
Benzo[a]pyrene		5.3	J	17	ug/L	8270C
Benzo[b]fluoranthene		4.4	J	17	ug/L	8270C
Benzo[g,h,i]perylene		6.5	J	17	ug/L	8270C
Benzo[k]fluoranthene		1.7	J	17	ug/L	8270C
Bis(2-ethylhexyl) phthalate		290		17	ug/L	8270C
Chrysene		8.3	J	17	ug/L	8270C
Dibenz(a,h)anthracene		3.1	J	17	ug/L	8270C
Dibenzofuran		2.1	J	17	ug/L	8270C
Fluoranthene		17		17	ug/L	8270C
Fluorene		3.5	J	17	ug/L	8270C
Indeno[1,2,3-cd]pyrene		4.0	J	17	ug/L	8270C
2-Methylnaphthalene		2.5	J	17	ug/L	8270C
Naphthalene		1.9	J	17	ug/L	8270C
Phenanthrene		13	J	17	ug/L	8270C
Pyrene		19		17	ug/L	8270C
Gasoline Range Organics (GRO)-C6-C10		0.018	J	0.050	mg/L	8015B
Diesel Range Organics [C10-C28]		11000		5000	ug/L	8015B
PCB-1242		1.6		0.50	ug/L	8082
PCB-1254		2.3		0.50	ug/L	8082
PCB-1260		2.2		0.50	ug/L	8082
Arsenic		25.8		12.5	ug/L	6020
Cadmium		13.1		12.5	ug/L	6020
Chromium		101		25.0	ug/L	6020
Copper		290		25.0	ug/L	6020
Nickel		126		12.5	ug/L	6020
Lead		280		12.5	ug/L	6020
Antimony		16.2	J	20.0	ug/L	6020
Zinc		506		125	ug/L	6020
Mercury		0.44		0.20	ug/L	7470A

EXECUTIVE SUMMARY - Detections

Client: STV Incorporated

Job Number: 220-9412-1
Sdg Number: 220-9412

Lab Sample ID / Analyte	Client Sample ID	Result / Qualifier		Reporting Limit	Units	Method
220-9412-2	W-EXC					
Acetone		6.2	J *	10	ug/L	8260B
Acenaphthene		0.66	J	4.1	ug/L	8270C
Anthracene		0.56	J	4.1	ug/L	8270C
Benzo[a]anthracene		0.74	J	4.1	ug/L	8270C
Benzo[a]pyrene		0.60	J	4.1	ug/L	8270C
Benzo[b]fluoranthene		0.52	J	4.1	ug/L	8270C
Benzo[g,h,i]perylene		1.6	J	4.1	ug/L	8270C
Bis(2-ethylhexyl) phthalate		17		4.1	ug/L	8270C
Chrysene		0.66	J	4.1	ug/L	8270C
Di-n-butyl phthalate		0.40	J	4.1	ug/L	8270C
Fluoranthene		1.7	J	4.1	ug/L	8270C
Fluorene		0.57	J	4.1	ug/L	8270C
Indeno[1,2,3-cd]pyrene		0.92	J	4.1	ug/L	8270C
Naphthalene		0.38	J	4.1	ug/L	8270C
Phenanthrene		1.4	J	4.1	ug/L	8270C
Pyrene		2.2	J	4.1	ug/L	8270C
Diesel Range Organics [C10-C28]		890		500	ug/L	8015B
Arsenic		7.3	J	12.5	ug/L	6020
Chromium		18.4	J	25.0	ug/L	6020
Copper		54.8		25.0	ug/L	6020
Nickel		30.0		12.5	ug/L	6020
Lead		47.0		12.5	ug/L	6020
Zinc		103	J	125	ug/L	6020

EXECUTIVE SUMMARY - Detections

Client: STV Incorporated

Job Number: 220-9412-1
Sdg Number: 220-9412

Lab Sample ID / Analyte	Client Sample ID	Result / Qualifier		Reporting Limit	Units	Method
220-9412-3	S-1					
Acetone		210	J *	230	ug/Kg	8260B
Benzene		27	J	57	ug/Kg	8260B
Carbon disulfide		11	J	57	ug/Kg	8260B
Ethylbenzene		50	J	57	ug/Kg	8260B
Methylene Chloride		100	J B	230	ug/Kg	8260B
1,1,2,2-Tetrachloroethane		390		57	ug/Kg	8260B
Xylenes, Total		300		57	ug/Kg	8260B
Acenaphthene		2000	J	12000	ug/Kg	8270C
Anthracene		5000	J	12000	ug/Kg	8270C
Benzo[a]anthracene		6200	J	12000	ug/Kg	8270C
Benzo[a]pyrene		6400	J	12000	ug/Kg	8270C
Benzo[b]fluoranthene		5000	J	12000	ug/Kg	8270C
Benzo[g,h,i]perylene		11000	J	12000	ug/Kg	8270C
Benzo[k]fluoranthene		1900	J	12000	ug/Kg	8270C
Bis(2-ethylhexyl) phthalate		130000		12000	ug/Kg	8270C
Chrysene		6900	J	12000	ug/Kg	8270C
Dibenz(a,h)anthracene		11000	J	12000	ug/Kg	8270C
Dibenzofuran		1500	J	12000	ug/Kg	8270C
Fluoranthene		12000	J	12000	ug/Kg	8270C
Fluorene		2800	J	12000	ug/Kg	8270C
Indeno[1,2,3-cd]pyrene		14000		12000	ug/Kg	8270C
2-Methylnaphthalene		6000	J	12000	ug/Kg	8270C
Naphthalene		3300	J	12000	ug/Kg	8270C
Phenanthrene		14000		12000	ug/Kg	8270C
Pyrene		19000		12000	ug/Kg	8270C
Gasoline Range Organics (GRO)-C6-C10		28		11	mg/Kg	8015B
Diesel Range Organics [C10-C28]		5100000		960000	ug/Kg	8015B
4,4'-DDD		310		38	ug/Kg	8081A
4,4'-DDE		130		38	ug/Kg	8081A
4,4'-DDT		410	*	38	ug/Kg	8081A
Aldrin		6.4	J	19	ug/Kg	8081A
beta-BHC		18	J	19	ug/Kg	8081A
Dieldrin		180		38	ug/Kg	8081A
Endrin		270		38	ug/Kg	8081A
Endrin aldehyde		75		38	ug/Kg	8081A
Endrin ketone		76		38	ug/Kg	8081A
Heptachlor		41		19	ug/Kg	8081A
Heptachlor epoxide		27		19	ug/Kg	8081A
Methoxychlor		96	J *	190	ug/Kg	8081A
alpha-Chlordane		61		19	ug/Kg	8081A
gamma-Chlordane		94		19	ug/Kg	8081A
PCB-1242		590		77	ug/Kg	8082
PCB-1254		520		77	ug/Kg	8082
PCB-1260		760		77	ug/Kg	8082
Silver		11.2		1.0	mg/Kg	6020
Arsenic		45.6		1.0	mg/Kg	6020
Beryllium		0.70	J	1.0	mg/Kg	6020
Cadmium		51.6		1.0	mg/Kg	6020

EXECUTIVE SUMMARY - Detections

Client: STV Incorporated

Job Number: 220-9412-1
Sdg Number: 220-9412

Lab Sample ID / Client Sample ID / Analyte	Result / Qualifier		Reporting Limit	Units	Method
Chromium	342		2.0	mg/Kg	6020
Copper	974		2.0	mg/Kg	6020
Nickel	392		1.0	mg/Kg	6020
Lead	607		1.0	mg/Kg	6020
Antimony	8.5		1.6	mg/Kg	6020
Selenium	8.8		2.0	mg/Kg	6020
Thallium	0.56	J	1.4	mg/Kg	6020
Zinc	1350		10	mg/Kg	6020
Mercury	2.4		0.55	mg/Kg	7471A
Ignitability	neg		2.2	mm/sec	1030
Temperature	1890		1.00	Fahrenheit	1030
Sulfide, Reactive	372		20.0	mg/Kg	9034
pH	8.52	HF	0.100	SU	9045C
Percent Moisture	56.4		0.10	%	Moisture
Percent Solids	43.6		0.10	%	Moisture
TCLP					
Methyl Ethyl Ketone	0.0084	J B	0.010	mg/L	8260B
Benzene	0.00082	J	0.0050	mg/L	8260B
Arsenic	0.064	J	0.075	mg/L	6010B
Barium	0.33		0.025	mg/L	6010B
Chromium	0.023	J	0.025	mg/L	6010B

EXECUTIVE SUMMARY - Detections

Client: STV Incorporated

Job Number: 220-9412-1
Sdg Number: 220-9412

Lab Sample ID / Analyte	Client Sample ID	Result / Qualifier		Reporting Limit	Units	Method
220-9412-4	S-2					
Acetone		340	*	220	ug/Kg	8260B
Benzene		10	J	54	ug/Kg	8260B
Carbon disulfide		20	J	54	ug/Kg	8260B
Ethylbenzene		19	J	54	ug/Kg	8260B
Methylene Chloride		98	J B	220	ug/Kg	8260B
Toluene		2.4	J B	54	ug/Kg	8260B
Xylenes, Total		90		54	ug/Kg	8260B
Acenaphthene		2400	J	12000	ug/Kg	8270C
Acenaphthylene		2100	J	12000	ug/Kg	8270C
Anthracene		7500	J	12000	ug/Kg	8270C
Benzo[a]anthracene		8900	J	12000	ug/Kg	8270C
Benzo[a]pyrene		7200	J	12000	ug/Kg	8270C
Benzo[b]fluoranthene		5300	J	12000	ug/Kg	8270C
Benzo[g,h,i]perylene		11000	J	12000	ug/Kg	8270C
Benzo[k]fluoranthene		1800	J	12000	ug/Kg	8270C
Bis(2-ethylhexyl) phthalate		110000		12000	ug/Kg	8270C
Chrysene		9200	J	12000	ug/Kg	8270C
Dibenz(a,h)anthracene		11000	J	12000	ug/Kg	8270C
Dibenzofuran		1400	J	12000	ug/Kg	8270C
Fluoranthene		15000		12000	ug/Kg	8270C
Fluorene		1700	J	12000	ug/Kg	8270C
Indeno[1,2,3-cd]pyrene		14000		12000	ug/Kg	8270C
2-Methylnaphthalene		2200	J	12000	ug/Kg	8270C
Naphthalene		2900	J	12000	ug/Kg	8270C
Phenanthrene		8700	J	12000	ug/Kg	8270C
Pyrene		21000		12000	ug/Kg	8270C
Gasoline Range Organics (GRO)-C6-C10		50		11	mg/Kg	8015B
Diesel Range Organics [C10-C28]		7000000		3600000	ug/Kg	8015B
4,4'-DDD		120		14	ug/Kg	8081A
4,4'-DDE		66		14	ug/Kg	8081A
4,4'-DDT		260	*	14	ug/Kg	8081A
alpha-BHC		3.0	J	7.3	ug/Kg	8081A
beta-BHC		8.3		7.3	ug/Kg	8081A
Dieldrin		74		14	ug/Kg	8081A
Endrin		200		14	ug/Kg	8081A
Endrin aldehyde		46		14	ug/Kg	8081A
Endrin ketone		43		14	ug/Kg	8081A
Heptachlor		26		7.3	ug/Kg	8081A
Heptachlor epoxide		11		7.3	ug/Kg	8081A
Methoxychlor		61	J *	73	ug/Kg	8081A
alpha-Chlordane		31		7.3	ug/Kg	8081A
gamma-Chlordane		32		7.3	ug/Kg	8081A
PCB-1242		720		180	ug/Kg	8082
PCB-1254		1100		180	ug/Kg	8082
PCB-1260		890		180	ug/Kg	8082
Silver		19.5		0.74	mg/Kg	6020
Arsenic		34.0		0.74	mg/Kg	6020
Beryllium		0.80		0.74	mg/Kg	6020

EXECUTIVE SUMMARY - Detections

Client: STV Incorporated

Job Number: 220-9412-1
Sdg Number: 220-9412

Lab Sample ID / Client Sample ID / Analyte	Result / Qualifier		Reporting Limit	Units	Method
Cadmium	104		0.74	mg/Kg	6020
Chromium	530		1.5	mg/Kg	6020
Copper	1450		1.5	mg/Kg	6020
Nickel	337		0.74	mg/Kg	6020
Lead	1370		0.74	mg/Kg	6020
Antimony	7.3		1.2	mg/Kg	6020
Selenium	5.0		1.5	mg/Kg	6020
Thallium	0.31	J	1.0	mg/Kg	6020
Zinc	2240		7.4	mg/Kg	6020
Mercury	2.6		0.54	mg/Kg	7471A
Ignitability	neg		2.2	mm/sec	1030
Temperature	1890		1.00	Fahrenheit	1030
Sulfide, Reactive	644		19.9	mg/Kg	9034
pH	8.34	HF	0.100	SU	9045C
Percent Moisture	53.7		0.10	%	Moisture
Percent Solids	46.3		0.10	%	Moisture
TCLP					
Methyl Ethyl Ketone	0.0085	J B	0.010	mg/L	8260B
Benzene	0.0018	J	0.0050	mg/L	8260B
Heptachlor	0.000042	J	0.00025	mg/L	8081A
Barium	0.34		0.025	mg/L	6010B
Chromium	0.038		0.025	mg/L	6010B

METHOD SUMMARY

Client: STV Incorporated

Job Number: 220-9412-1
Sdg Number: 220-9412

Description	Lab Location	Method	Preparation Method
Matrix Solid			
Volatile Organic Compounds (GC/MS)	TAL CT	SW846 8260B	
TCLP Extraction	TAL CT		SW846 1311
Purge and Trap	TAL CT		SW846 5030B
Semivolatile Compounds by Gas Chromatography/Mass Spectrometry (GC/MS)	TAL CT	SW846 8270C	
TCLP Extraction	TAL CT		SW846 1311
Liquid-Liquid Extraction (Separatory Funnel)	TAL CT		SW846 3510C
Automated Soxhlet Extraction	TAL CT		SW846 3541
Gasoline Range Organics - (GC)	TAL SAV	SW846 8015B	
Purge and Trap	TAL SAV		SW846 5030A
Diesel Range Organics (DRO) (GC)	TAL CT	SW846 8015B	
Hydrocarbon Product Identification (GC)	TAL CT	SW846 8015B	
Ultrasonic Extraction	TAL CT		SW846 3550B
Ultrasonic Extraction	TAL CT		SW846 3550B
Organochlorine Pesticides (GC)	TAL CT	SW846 8081A	
TCLP Extraction	TAL CT		SW846 1311
Liquid-Liquid Extraction (Separatory Funnel)	TAL CT		SW846 3510C
Ultrasonic Extraction	TAL CT		SW846 3550B
Polychlorinated Biphenyls (PCBs) by Gas Chromatography	TAL CT	SW846 8082	
Ultrasonic Extraction	TAL CT		SW846 3550B
Herbicides (GC)	TAL SAV	SW846 8151A	
TCLP Extraction	TAL SAV		SW846 1311
Extraction (Herbicides)	TAL SAV		SW846 8151A
Metals (ICP)	TAL CT	SW846 6010B	
TCLP Extraction	TAL CT		SW846 1311
Preparation, Total Metals	TAL CT		SW846 3010A
Metals (ICP/MS)	TAL CT	SW846 6020	
Preparation, Metals	TAL CT		SW846 3050B
Mercury (CVAA)	TAL CT	SW846 7470A	
TCLP Extraction	TAL CT		SW846 1311
Preparation, Mercury	TAL CT		SW846 7470A
Mercury (CVAA)	TAL CT	SW846 7471A	
Preparation, Mercury	TAL CT		SW846 7471A
Ignitability, Solids	TAL CT	SW846 1030	
Chromium, Hexavalent	TAL SAV	SW846 7196A	
Alkaline Digestion (Chromium, Hexavalent)	TAL SAV		SW846 3060A
Cyanide, Reactive	TAL CT	SW846 9012	
Cyanide, Reactive	TAL CT		SW846 7.3.3
Sulfide, Reactive	TAL CT	SW846 9034	
Sulfide, Reactive	TAL CT		SW846 7.3.4

METHOD SUMMARY

Client: STV Incorporated

Job Number: 220-9412-1
Sdg Number: 220-9412

Description	Lab Location	Method	Preparation Method
Matrix Solid			
pH	TAL CT	SW846 9045C	
Percent Moisture	TAL CT	EPA Moisture	
Matrix Water			
Volatile Organic Compounds (GC/MS)	TAL CT	SW846 8260B	
Purge and Trap	TAL CT		SW846 5030B
Semivolatile Compounds by Gas Chromatography/Mass Spectrometry (GC/MS)	TAL CT	SW846 8270C	
Liquid-Liquid Extraction (Separatory Funnel)	TAL CT		SW846 3510C
Gasoline Range Organics - (GC)	TAL SAV	SW846 8015B	
Purge and Trap	TAL SAV		SW846 5030B
Diesel Range Organics (DRO) (GC)	TAL CT	SW846 8015B	
Hydrocarbon Product Identification (GC)	TAL CT	SW846 8015B	
Liquid-Liquid Extraction (Separatory Funnel)	TAL CT		SW846 3510C
Liquid-Liquid Extraction (Separatory Funnel)	TAL CT		SW846 3510C
Polychlorinated Biphenyls (PCBs) by Gas Chromatography	TAL CT	SW846 8082	
Liquid-Liquid Extraction (Separatory Funnel)	TAL CT		SW846 3510C
Metals (ICP/MS)	TAL CT	SW846 6020	
Preparation, Total Metals	TAL CT		SW846 3010A
Mercury (CVAA)	TAL CT	SW846 7470A	
Preparation, Mercury	TAL CT		SW846 7470A

Lab References:

TAL CT = TestAmerica Connecticut

TAL SAV = TestAmerica Savannah

Method References:

EPA = US Environmental Protection Agency

SW846 = "Test Methods For Evaluating Solid Waste, Physical/Chemical Methods", Third Edition, November 1986 And Its Updates.

METHOD / ANALYST SUMMARY

Client: STV Incorporated

Job Number: 220-9412-1
Sdg Number: 220-9412

Method	Analyst	Analyst ID
SW846 8260B	Kostrzewska, Barbara	BK
SW846 8260B	Paveglio, Peter R	PRP
SW846 8270C	Jonas, Stephan	SJ
SW846 8015B	Moncrief, Amy	AM
SW846 8015B	Widomski, Sarah	SW
SW846 8081A	Cooper, Susan	SC
SW846 8082	Smith, Karli	KS
SW846 8151A	Kellar, Joshua	JK
SW846 6010B	Petronchak, Nestor	NP
SW846 6020	Petronchak, Nestor	NP
SW846 7470A	Voytek, Joseph F	JFV
SW846 7471A	Voytek, Joseph F	JFV
SW846 1030	Tillotson, Ray	RT
SW846 7196A	Ross, Jon	JR
SW846 9012	Natoli, Richard A	RN
SW846 9034	Natoli, Richard A	RN
SW846 9045C	Mendoza, Julia	JM
EPA Moisture	Capece, Bill	BC

SAMPLE SUMMARY

Client: STV Incorporated

Job Number: 220-9412-1
Sdg Number: 220-9412

Lab Sample ID	Client Sample ID	Client Matrix	Date/Time Sampled	Date/Time Received
220-9412-1	W-TANK	Water	06/19/2009 1030	06/20/2009 0748
220-9412-2	W-EXC	Water	06/19/2009 1000	06/20/2009 0748
220-9412-3	S-1	Solid	06/19/2009 1045	06/20/2009 0748
220-9412-4	S-2	Solid	06/19/2009 1115	06/20/2009 0748

SAMPLE RESULTS

Client: STV Incorporated

Job Number: 220-9412-1
Sdg Number: 220-9412

Client Sample ID: **W-TANK**

Lab Sample ID: 220-9412-1
Client Matrix: Water

Date Sampled: 06/19/2009 1030
Date Received: 06/20/2009 0748

8260B Volatile Organic Compounds (GC/MS)

Method: 8260B
Preparation: 5030B
Dilution: 1.0
Date Analyzed: 06/22/2009 1416
Date Prepared: 06/22/2009 1416

Analysis Batch: 220-28342

Instrument ID: HP 5890/5971 GC/MS
Lab File ID: L5665.D
Initial Weight/Volume: 5 mL
Final Weight/Volume: 5 mL

Analyte	Result (ug/L)	Qualifier	MDL	RL
Acetone	16	*	1.0	10
Benzene	5.0	U	0.74	5.0
Bromodichloromethane	5.0	U	0.48	5.0
Bromoform	5.0	U	0.46	5.0
Bromomethane	5.0	U	2.1	5.0
Methyl Ethyl Ketone	10	U *	1.1	10
Carbon disulfide	5.0	U	0.90	5.0
Carbon tetrachloride	5.0	U	1.1	5.0
Chlorobenzene	5.0	U	0.72	5.0
Chloroethane	5.0	U	1.1	5.0
Chloroform	5.0	U	0.67	5.0
Chloromethane	5.0	U	1.1	5.0
Dibromochloromethane	5.0	U	0.55	5.0
1,1-Dichloroethane	5.0	U	1.0	5.0
1,2-Dichloroethane	5.0	U	0.72	5.0
1,1-Dichloroethene	5.0	U	0.83	5.0
1,2-Dichloropropane	5.0	U	0.71	5.0
cis-1,3-Dichloropropene	5.0	U	0.28	5.0
trans-1,3-Dichloropropene	5.0	U	0.57	5.0
Ethylbenzene	5.0	U	0.87	5.0
2-Hexanone	10	U	1.1	10
Methylene Chloride	5.0	U	0.78	5.0
methyl isobutyl ketone	10	U	0.38	10
Styrene	5.0	U	0.64	5.0
1,1,2,2-Tetrachloroethane	5.0	U	0.81	5.0
Tetrachloroethene	5.0	U	0.81	5.0
Toluene	5.0	U	0.72	5.0
1,1,1-Trichloroethane	5.0	U	0.69	5.0
1,1,2-Trichloroethane	5.0	U	0.65	5.0
Trichloroethene	5.0	U	0.62	5.0
Vinyl chloride	5.0	U	0.99	5.0
Xylenes, Total	5.0	U	2.3	5.0
cis-1,2-Dichloroethene	5.0	U	0.99	5.0
trans-1,2-Dichloroethene	5.0	U	0.76	5.0

Surrogate	%Rec	Acceptance Limits
1,2-Dichloroethane-d4 (Surr)	113	65 - 136
4-Bromofluorobenzene	115	51 - 142
Dibromofluoromethane	112	68 - 132
Toluene-d8 (Surr)	117	63 - 127

Client: STV Incorporated

Job Number: 220-9412-1
Sdg Number: 220-9412

Client Sample ID: W-EXC

Lab Sample ID: 220-9412-2
Client Matrix: Water

Date Sampled: 06/19/2009 1000
Date Received: 06/20/2009 0748

8260B Volatile Organic Compounds (GC/MS)

Method: 8260B
Preparation: 5030B
Dilution: 1.0
Date Analyzed: 06/22/2009 1352
Date Prepared: 06/22/2009 1352

Analysis Batch: 220-28342

Instrument ID: HP 5890/5971 GC/MS
Lab File ID: L5664.D
Initial Weight/Volume: 5 mL
Final Weight/Volume: 5 mL

Analyte	Result (ug/L)	Qualifier	MDL	RL
Acetone	6.2	J *	1.0	10
Benzene	5.0	U	0.74	5.0
Bromodichloromethane	5.0	U	0.48	5.0
Bromoform	5.0	U	0.46	5.0
Bromomethane	5.0	U	2.1	5.0
Methyl Ethyl Ketone	10	U *	1.1	10
Carbon disulfide	5.0	U	0.90	5.0
Carbon tetrachloride	5.0	U	1.1	5.0
Chlorobenzene	5.0	U	0.72	5.0
Chloroethane	5.0	U	1.1	5.0
Chloroform	5.0	U	0.67	5.0
Chloromethane	5.0	U	1.1	5.0
Dibromochloromethane	5.0	U	0.55	5.0
1,1-Dichloroethane	5.0	U	1.0	5.0
1,2-Dichloroethane	5.0	U	0.72	5.0
1,1-Dichloroethene	5.0	U	0.83	5.0
1,2-Dichloropropane	5.0	U	0.71	5.0
cis-1,3-Dichloropropene	5.0	U	0.28	5.0
trans-1,3-Dichloropropene	5.0	U	0.57	5.0
Ethylbenzene	5.0	U	0.87	5.0
2-Hexanone	10	U	1.1	10
Methylene Chloride	5.0	U	0.78	5.0
methyl isobutyl ketone	10	U	0.38	10
Styrene	5.0	U	0.64	5.0
1,1,2,2-Tetrachloroethane	5.0	U	0.81	5.0
Tetrachloroethene	5.0	U	0.81	5.0
Toluene	5.0	U	0.72	5.0
1,1,1-Trichloroethane	5.0	U	0.69	5.0
1,1,2-Trichloroethane	5.0	U	0.65	5.0
Trichloroethene	5.0	U	0.62	5.0
Vinyl chloride	5.0	U	0.99	5.0
Xylenes, Total	5.0	U	2.3	5.0
cis-1,2-Dichloroethene	5.0	U	0.99	5.0
trans-1,2-Dichloroethene	5.0	U	0.76	5.0

Surrogate	%Rec	Acceptance Limits
1,2-Dichloroethane-d4 (Surr)	113	65 - 136
4-Bromofluorobenzene	119	51 - 142
Dibromofluoromethane	114	68 - 132
Toluene-d8 (Surr)	115	63 - 127

Client: STV Incorporated

Job Number: 220-9412-1
Sdg Number: 220-9412

Client Sample ID: **S-1**

Lab Sample ID: 220-9412-3
Client Matrix: Solid

Date Sampled: 06/19/2009 1045
Date Received: 06/20/2009 0748

8260B Volatile Organic Compounds (GC/MS)-TCLP

Method: 8260B
Preparation: 5030B
Dilution: 1.0
Date Analyzed: 06/23/2009 1311
Date Prepared: 06/23/2009 1311
Date Leached: 06/22/2009 1032

Analysis Batch: 220-28395
Leachate Batch: 220-28315

Instrument ID: HP 6890/5973 GC/MS
Lab File ID: W6282.D
Initial Weight/Volume: 5 mL
Final Weight/Volume: 5 mL

Analyte	DryWt Corrected: N	Result (mg/L)	Qualifier	MDL	RL
Vinyl chloride		0.0050	U	0.00098	0.0050
1,1-Dichloroethene		0.0050	U	0.00083	0.0050
Methyl Ethyl Ketone		0.0084	J B	0.0011	0.010
Chloroform		0.0050	U	0.00067	0.0050
Carbon tetrachloride		0.0050	U	0.0011	0.0050
Benzene		0.00082	J	0.00074	0.0050
1,2-Dichloroethane		0.0050	U	0.00072	0.0050
Trichloroethene		0.0050	U	0.00062	0.0050
Tetrachloroethene		0.0050	U	0.00081	0.0050
Chlorobenzene		0.0050	U	0.00072	0.0050

Surrogate	%Rec	Acceptance Limits
1,2-Dichloroethane-d4 (Surr)	102	65 - 136
4-Bromofluorobenzene	108	51 - 142
Dibromofluoromethane	98	68 - 132
Toluene-d8 (Surr)	104	63 - 127

Client: STV Incorporated

Job Number: 220-9412-1
Sdg Number: 220-9412

Client Sample ID: **S-1**

Lab Sample ID: 220-9412-3
Client Matrix: Solid
% Moisture: 56.4
Date Sampled: 06/19/2009 1045
Date Received: 06/20/2009 0748

8260B Volatile Organic Compounds (GC/MS)

Method: 8260B
Preparation: 5030B
Dilution: 5.0
Date Analyzed: 06/22/2009 1640
Date Prepared: 06/22/2009 1640
Analysis Batch: 220-28348
Instrument ID: HP 5890/5971A GC/MS
Lab File ID: O1277.D
Initial Weight/Volume: 5 g
Final Weight/Volume: 5 mL

Analyte	DryWt Corrected: Y Result (ug/Kg)	Qualifier	MDL	RL
Acetone	210	J *	26	230
Benzene	27	J	6.5	57
Bromodichloromethane	57	U	3.4	57
Bromoform	57	U	7.0	57
Bromomethane	57	U	24	57
Methyl Ethyl Ketone	110	U	18	110
Carbon disulfide	11	J	4.7	57
Carbon tetrachloride	57	U	11	57
Chlorobenzene	57	U	6.8	57
Chloroethane	57	U	11	57
Chloroform	57	U	3.9	57
Chloromethane	57	U	8.9	57
Dibromochloromethane	57	U	4.0	57
1,1-Dichloroethane	57	U	3.4	57
1,2-Dichloroethane	57	U	6.6	57
1,1-Dichloroethene	57	U	6.6	57
1,2-Dichloropropane	57	U	7.7	57
cis-1,3-Dichloropropene	57	U	6.4	57
trans-1,3-Dichloropropene	57	U	3.1	57
Ethylbenzene	50	J	8.0	57
2-Hexanone	110	U	14	110
Methylene Chloride	100	J B	12	230
methyl isobutyl ketone	57	U	6.3	57
Styrene	57	U	1.7	57
1,1,2,2-Tetrachloroethane	390		6.0	57
Tetrachloroethene	57	U	9.3	57
Toluene	57	U	0.85	57
1,1,1-Trichloroethane	57	U	6.1	57
1,1,2-Trichloroethane	57	U	4.2	57
Trichloroethene	57	U	9.3	57
Vinyl chloride	57	U	2.6	57
Xylenes, Total	300		5.6	57
cis-1,2-Dichloroethene	57	U	4.2	57
trans-1,2-Dichloroethene	57	U	4.5	57

Surrogate	%Rec		Acceptance Limits
1,2-Dichloroethane-d4 (Surr)	73		59 - 132
4-Bromofluorobenzene	102		34 - 124
Dibromofluoromethane	64		59 - 123
Toluene-d8 (Surr)	43	*	50 - 118

Client: STV Incorporated

Job Number: 220-9412-1
Sdg Number: 220-9412

Client Sample ID: **S-2**

Lab Sample ID: 220-9412-4
Client Matrix: Solid

Date Sampled: 06/19/2009 1115
Date Received: 06/20/2009 0748

8260B Volatile Organic Compounds (GC/MS)-TCLP

Method: 8260B
Preparation: 5030B
Dilution: 1.0
Date Analyzed: 06/23/2009 1335
Date Prepared: 06/23/2009 1335
Date Leached: 06/22/2009 1032

Analysis Batch: 220-28395
Leachate Batch: 220-28315

Instrument ID: HP 6890/5973 GC/MS
Lab File ID: W6283.D
Initial Weight/Volume: 5 mL
Final Weight/Volume: 5 mL

Analyte	DryWt Corrected: N	Result (mg/L)	Qualifier	MDL	RL
Vinyl chloride		0.0050	U	0.00098	0.0050
1,1-Dichloroethene		0.0050	U	0.00083	0.0050
Methyl Ethyl Ketone		0.0085	J B	0.0011	0.010
Chloroform		0.0050	U	0.00067	0.0050
Carbon tetrachloride		0.0050	U	0.0011	0.0050
Benzene		0.0018	J	0.00074	0.0050
1,2-Dichloroethane		0.0050	U	0.00072	0.0050
Trichloroethene		0.0050	U	0.00062	0.0050
Tetrachloroethene		0.0050	U	0.00081	0.0050
Chlorobenzene		0.0050	U	0.00072	0.0050

Surrogate	%Rec	Acceptance Limits
1,2-Dichloroethane-d4 (Surr)	102	65 - 136
4-Bromofluorobenzene	108	51 - 142
Dibromofluoromethane	96	68 - 132
Toluene-d8 (Surr)	104	63 - 127

Client: STV Incorporated

Job Number: 220-9412-1
Sdg Number: 220-9412

Client Sample ID: **S-2**

Lab Sample ID: 220-9412-4
Client Matrix: Solid
% Moisture: 53.7
Date Sampled: 06/19/2009 1115
Date Received: 06/20/2009 0748

8260B Volatile Organic Compounds (GC/MS)

Method: 8260B
Preparation: 5030B
Dilution: 5.0
Date Analyzed: 06/22/2009 1705
Date Prepared: 06/22/2009 1705
Analysis Batch: 220-28348
Instrument ID: HP 5890/5971A GC/MS
Lab File ID: O1278.D
Initial Weight/Volume: 5 g
Final Weight/Volume: 5 mL

Analyte	DryWt Corrected: Y	Result (ug/Kg)	Qualifier	MDL	RL
Acetone		340	*	24	220
Benzene		10	J	6.2	54
Bromodichloromethane		54	U	3.2	54
Bromoform		54	U	6.6	54
Bromomethane		54	U	22	54
Methyl Ethyl Ketone		110	U	17	110
Carbon disulfide		20	J	4.4	54
Carbon tetrachloride		54	U	10	54
Chlorobenzene		54	U	6.4	54
Chloroethane		54	U	11	54
Chloroform		54	U	3.7	54
Chloromethane		54	U	8.4	54
Dibromochloromethane		54	U	3.8	54
1,1-Dichloroethane		54	U	3.2	54
1,2-Dichloroethane		54	U	6.3	54
1,1-Dichloroethene		54	U	6.3	54
1,2-Dichloropropane		54	U	7.2	54
cis-1,3-Dichloropropene		54	U	6.0	54
trans-1,3-Dichloropropene		54	U	2.9	54
Ethylbenzene		19	J	7.6	54
2-Hexanone		110	U	13	110
Methylene Chloride		98	J B	12	220
methyl isobutyl ketone		54	U	5.9	54
Styrene		54	U	1.6	54
1,1,2,2-Tetrachloroethane		54	U	5.6	54
Tetrachloroethene		54	U	8.7	54
Toluene		2.4	J B	0.80	54
1,1,1-Trichloroethane		54	U	5.7	54
1,1,2-Trichloroethane		54	U	4.0	54
Trichloroethene		54	U	8.7	54
Vinyl chloride		54	U	2.5	54
Xylenes, Total		90		5.2	54
cis-1,2-Dichloroethene		54	U	4.0	54
trans-1,2-Dichloroethene		54	U	4.2	54

Surrogate	%Rec	Acceptance Limits
1,2-Dichloroethane-d4 (Surr)	76	59 - 132
4-Bromofluorobenzene	91	34 - 124
Dibromofluoromethane	73	59 - 123
Toluene-d8 (Surr)	65	50 - 118

Client: STV Incorporated

Job Number: 220-9412-1
Sdg Number: 220-9412

Client Sample ID: **W-TANK**

Lab Sample ID: 220-9412-1
Client Matrix: Water

Date Sampled: 06/19/2009 1030
Date Received: 06/20/2009 0748

8270C Semivolatile Compounds by Gas Chromatography/Mass Spectrometry (GC/MS)

Method: 8270C
Preparation: 3510C
Dilution: 4.0
Date Analyzed: 06/22/2009 1226
Date Prepared: 06/20/2009 1317

Analysis Batch: 220-28334
Prep Batch: 220-28305

Instrument ID: HP 6890/5975
Lab File ID: A5735.D
Initial Weight/Volume: 960 mL
Final Weight/Volume: 1 mL
Injection Volume: 1.0 uL

Analyte	Result (ug/L)	Qualifier	MDL	RL
Acenaphthene	3.6	J	1.3	17
Acenaphthylene	2.2	J	1.4	17
Anthracene	5.4	J	1.2	17
Benzo[a]anthracene	8.6	J	1.2	17
Benzo[a]pyrene	5.3	J	1.5	17
Benzo[b]fluoranthene	4.4	J	1.5	17
Benzo[g,h,i]perylene	6.5	J	1.5	17
Benzo[k]fluoranthene	1.7	J	1.7	17
Bis(2-chloroethoxy)methane	17	U	1.3	17
Bis(2-chloroethyl)ether	17	U	1.2	17
Bis(2-ethylhexyl) phthalate	290		2.3	17
Butyl benzyl phthalate	17	U	1.5	17
Carbazole	17	U	1.4	17
Chrysene	8.3	J	1.0	17
Di-n-butyl phthalate	17	U	1.5	17
Di-n-octyl phthalate	17	U	1.6	17
4-Bromophenyl phenyl ether	17	U	1.8	17
4-Chloroaniline	17	U	1.2	17
2-Chloronaphthalene	17	U	1.6	17
4-Chlorophenyl phenyl ether	17	U	1.5	17
Dibenz(a,h)anthracene	3.1	J	1.6	17
Dibenzofuran	2.1	J	1.8	17
Diethyl phthalate	17	U	1.8	17
Dimethyl phthalate	17	U	1.6	17
1,2-Dichlorobenzene	17	U	1.3	17
1,3-Dichlorobenzene	17	U	1.0	17
1,4-Dichlorobenzene	17	U	1.3	17
3,3'-Dichlorobenzidine	17	U	1.5	17
2,4-Dinitrotoluene	17	U	1.7	17
2,6-Dinitrotoluene	17	U	1.1	17
Fluoranthene	17		1.3	17
Fluorene	3.5	J	1.1	17
Hexachlorobenzene	17	U	1.4	17
Hexachlorobutadiene	17	U	0.83	17
Hexachlorocyclopentadiene	17	U	1.5	17
Hexachloroethane	17	U	1.5	17
Indeno[1,2,3-cd]pyrene	4.0	J	1.2	17
Isophorone	17	U	1.3	17
2-Methylnaphthalene	2.5	J	1.1	17
Naphthalene	1.9	J	1.2	17
2-Nitroaniline	17	U	1.4	17
3-Nitroaniline	17	U	0.96	17
Nitrobenzene	17	U	1.2	17
N-Nitrosodi-n-propylamine	17	U	1.4	17

Client: STV Incorporated

Job Number: 220-9412-1
Sdg Number: 220-9412

Client Sample ID: **W-TANK**

Lab Sample ID: 220-9412-1
Client Matrix: Water

Date Sampled: 06/19/2009 1030
Date Received: 06/20/2009 0748

8270C Semivolatile Compounds by Gas Chromatography/Mass Spectrometry (GC/MS)

Method: 8270C
Preparation: 3510C
Dilution: 4.0
Date Analyzed: 06/22/2009 1226
Date Prepared: 06/20/2009 1317

Analysis Batch: 220-28334
Prep Batch: 220-28305

Instrument ID: HP 6890/5975
Lab File ID: A5735.D
Initial Weight/Volume: 960 mL
Final Weight/Volume: 1 mL
Injection Volume: 1.0 uL

Analyte	Result (ug/L)	Qualifier	MDL	RL
N-Nitrosodiphenylamine	17	U	1.4	17
Phenanthrene	13	J	1.2	17
Pyrene	19		1.4	17
1,2,4-Trichlorobenzene	17	U	1.5	17
4-Chloro-3-methylphenol	21	U	1.4	21
2-Chlorophenol	17	U	0.96	17
2-Methylphenol	17	U	1.0	17
4-Methylphenol	17	U	1.2	17
2,4-Dichlorophenol	17	U	1.4	17
2,4-Dimethylphenol	17	U	1.4	17
2,4-Dinitrophenol	100	U	1.8	100
4,6-Dinitro-2-methylphenol	100	U	7.8	100
2-Nitrophenol	17	U	1.1	17
4-Nitrophenol	42	U	6.0	42
Pentachlorophenol	100	U	1.3	100
Phenol	17	U	0.79	17
2,4,5-Trichlorophenol	42	U	1.2	42
2,4,6-Trichlorophenol	17	U	1.5	17
Benzyl alcohol	17	U	1.7	17
4-Nitroaniline	17	U	0.83	17
2,2'-oxybis[1-chloropropane]	17	U	1.0	17

Surrogate	%Rec	Acceptance Limits
2-Fluorobiphenyl	87	39 - 120
2-Fluorophenol	43	13 - 120
2,4,6-Tribromophenol	76	36 - 120
Nitrobenzene-d5	79	40 - 120
Phenol-d5	35	10 - 120
Terphenyl-d14	68	10 - 120

Client: STV Incorporated

Job Number: 220-9412-1
Sdg Number: 220-9412

Client Sample ID: **W-EXC**

Lab Sample ID: 220-9412-2
Client Matrix: Water

Date Sampled: 06/19/2009 1000
Date Received: 06/20/2009 0748

8270C Semivolatile Compounds by Gas Chromatography/Mass Spectrometry (GC/MS)

Method: 8270C
Preparation: 3510C
Dilution: 1.0
Date Analyzed: 06/22/2009 1107
Date Prepared: 06/20/2009 1317

Analysis Batch: 220-28334
Prep Batch: 220-28305

Instrument ID: HP 6890/5975
Lab File ID: A5732.D
Initial Weight/Volume: 970 mL
Final Weight/Volume: 1 mL
Injection Volume: 1.0 uL

Analyte	Result (ug/L)	Qualifier	MDL	RL
Acenaphthene	0.66	J	0.32	4.1
Acenaphthylene	4.1	U	0.35	4.1
Anthracene	0.56	J	0.30	4.1
Benzo[a]anthracene	0.74	J	0.31	4.1
Benzo[a]pyrene	0.60	J	0.36	4.1
Benzo[b]fluoranthene	0.52	J	0.37	4.1
Benzo[g,h,i]perylene	1.6	J	0.37	4.1
Benzo[k]fluoranthene	4.1	U	0.41	4.1
Bis(2-chloroethoxy)methane	4.1	U	0.32	4.1
Bis(2-chloroethyl)ether	4.1	U	0.30	4.1
Bis(2-ethylhexyl) phthalate	17		0.56	4.1
Butyl benzyl phthalate	4.1	U	0.36	4.1
Carbazole	4.1	U	0.34	4.1
Chrysene	0.66	J	0.26	4.1
Di-n-butyl phthalate	0.40	J	0.36	4.1
Di-n-octyl phthalate	4.1	U	0.39	4.1
4-Bromophenyl phenyl ether	4.1	U	0.45	4.1
4-Chloroaniline	4.1	U	0.30	4.1
2-Chloronaphthalene	4.1	U	0.40	4.1
4-Chlorophenyl phenyl ether	4.1	U	0.36	4.1
Dibenz(a,h)anthracene	4.1	U	0.39	4.1
Dibenzofuran	4.1	U	0.44	4.1
Diethyl phthalate	4.1	U	0.44	4.1
Dimethyl phthalate	4.1	U	0.39	4.1
1,2-Dichlorobenzene	4.1	U	0.32	4.1
1,3-Dichlorobenzene	4.1	U	0.26	4.1
1,4-Dichlorobenzene	4.1	U	0.32	4.1
3,3'-Dichlorobenzidine	4.1	U	0.37	4.1
2,4-Dinitrotoluene	4.1	U	0.41	4.1
2,6-Dinitrotoluene	4.1	U	0.27	4.1
Fluoranthene	1.7	J	0.32	4.1
Fluorene	0.57	J	0.27	4.1
Hexachlorobenzene	4.1	U	0.34	4.1
Hexachlorobutadiene	4.1	U	0.21	4.1
Hexachlorocyclopentadiene	4.1	U	0.36	4.1
Hexachloroethane	4.1	U	0.38	4.1
Indeno[1,2,3-cd]pyrene	0.92	J	0.29	4.1
Isophorone	4.1	U	0.32	4.1
2-Methylnaphthalene	4.1	U	0.28	4.1
Naphthalene	0.38	J	0.31	4.1
2-Nitroaniline	4.1	U	0.35	4.1
3-Nitroaniline	4.1	U	0.24	4.1
Nitrobenzene	4.1	U	0.29	4.1
N-Nitrosodi-n-propylamine	4.1	U	0.34	4.1

Client: STV Incorporated

Job Number: 220-9412-1
Sdg Number: 220-9412

Client Sample ID: **W-EXC**

Lab Sample ID: 220-9412-2
Client Matrix: Water

Date Sampled: 06/19/2009 1000
Date Received: 06/20/2009 0748

8270C Semivolatile Compounds by Gas Chromatography/Mass Spectrometry (GC/MS)

Method: 8270C
Preparation: 3510C
Dilution: 1.0
Date Analyzed: 06/22/2009 1107
Date Prepared: 06/20/2009 1317

Analysis Batch: 220-28334
Prep Batch: 220-28305

Instrument ID: HP 6890/5975
Lab File ID: A5732.D
Initial Weight/Volume: 970 mL
Final Weight/Volume: 1 mL
Injection Volume: 1.0 uL

Analyte	Result (ug/L)	Qualifier	MDL	RL
N-Nitrosodiphenylamine	4.1	U	0.34	4.1
Phenanthrene	1.4	J	0.29	4.1
Pyrene	2.2	J	0.34	4.1
1,2,4-Trichlorobenzene	4.1	U	0.37	4.1
4-Chloro-3-methylphenol	5.2	U	0.35	5.2
2-Chlorophenol	4.1	U	0.24	4.1
2-Methylphenol	4.1	U	0.25	4.1
4-Methylphenol	4.1	U	0.30	4.1
2,4-Dichlorophenol	4.1	U	0.34	4.1
2,4-Dimethylphenol	4.1	U	0.34	4.1
2,4-Dinitrophenol	26	U	0.44	26
4,6-Dinitro-2-methylphenol	26	U	1.9	26
2-Nitrophenol	4.1	U	0.28	4.1
4-Nitrophenol	10	U	1.5	10
Pentachlorophenol	26	U	0.32	26
Phenol	4.1	U	0.20	4.1
2,4,5-Trichlorophenol	10	U	0.29	10
2,4,6-Trichlorophenol	4.1	U	0.38	4.1
Benzyl alcohol	4.1	U	0.42	4.1
4-Nitroaniline	4.1	U	0.21	4.1
2,2'-oxybis[1-chloropropane]	4.1	U	0.26	4.1

Surrogate	%Rec	Acceptance Limits
2-Fluorobiphenyl	73	39 - 120
2-Fluorophenol	37	13 - 120
2,4,6-Tribromophenol	66	36 - 120
Nitrobenzene-d5	71	40 - 120
Phenol-d5	29	10 - 120
Terphenyl-d14	72	10 - 120

Client: STV Incorporated

Job Number: 220-9412-1
Sdg Number: 220-9412

Client Sample ID: **S-1**

Lab Sample ID: 220-9412-3
Client Matrix: Solid

Date Sampled: 06/19/2009 1045
Date Received: 06/20/2009 0748

8270C Semivolatile Compounds by Gas Chromatography/Mass Spectrometry (GC/MS)-TCLP

Method: 8270C
Preparation: 3510C
Dilution: 1.0
Date Analyzed: 06/24/2009 1523
Date Prepared: 06/24/2009 0907
Date Leached: 06/22/2009 1600

Analysis Batch: 220-28470
Prep Batch: 220-28419
Leachate Batch: 220-28369

Instrument ID: HP 6890/5975
Lab File ID: A5794.D
Initial Weight/Volume: 250 mL
Final Weight/Volume: 0.5 mL
Injection Volume: 1.0 uL

Analyte	DryWt Corrected: N	Result (mg/L)	Qualifier	MDL	RL
1,4-Dichlorobenzene		0.020	U	0.00062	0.020
2,4-Dinitrotoluene		0.020	U	0.00080	0.020
2,4,5-Trichlorophenol		0.10	U	0.00056	0.10
2,4,6-Trichlorophenol		0.020	U	0.00074	0.020
2-Methylphenol		0.020	U	0.00048	0.020
Hexachlorobenzene		0.020	U	0.00066	0.020
Hexachlorobutadiene		0.020	U	0.00040	0.020
Hexachloroethane		0.020	U	0.00074	0.020
Nitrobenzene		0.020	U	0.00056	0.020
Pentachlorophenol		0.10	U	0.00062	0.10
Pyridine		0.040	U	0.0077	0.040
4-Methylphenol		0.020	U	0.00058	0.020

Surrogate	%Rec	Acceptance Limits
2,4,6-Tribromophenol	86	29 - 126
2-Fluorobiphenyl	64	43 - 116
2-Fluorophenol	60	21 - 97
Nitrobenzene-d5	68	38 - 113
Terphenyl-d14	92	10 - 119
Phenol-d5	57	18 - 97

Client: STV Incorporated

Job Number: 220-9412-1
Sdg Number: 220-9412

Client Sample ID: **S-1**

Lab Sample ID: 220-9412-3
Client Matrix: Solid
% Moisture: 56.4
Date Sampled: 06/19/2009 1045
Date Received: 06/20/2009 0748

8270C Semivolatile Compounds by Gas Chromatography/Mass Spectrometry (GC/MS)

Method: 8270C
Preparation: 3541
Dilution: 20
Date Analyzed: 06/23/2009 1228
Date Prepared: 06/20/2009 1110
Analysis Batch: 220-28390
Prep Batch: 220-28293
Instrument ID: HP 6890/5973 GC/MS
Lab File ID: Z11432.D
Initial Weight/Volume: 15.19 g
Final Weight/Volume: 1 mL
Injection Volume: 1.0 uL

Analyte	DryWt Corrected: Y	Result (ug/Kg)	Qualifier	MDL	RL
Acenaphthene		2000	J	720	12000
Acenaphthylene		12000	U	600	12000
Anthracene		5000	J	480	12000
Benzo[a]anthracene		6200	J	430	12000
Benzo[a]pyrene		6400	J	330	12000
Benzo[b]fluoranthene		5000	J	330	12000
Benzo[g,h,i]perylene		11000	J	800	12000
Benzo[k]fluoranthene		1900	J	1100	12000
Bis(2-chloroethoxy)methane		12000	U	570	12000
Bis(2-chloroethyl)ether		12000	U	630	12000
Bis(2-ethylhexyl) phthalate		130000		1200	12000
Butyl benzyl phthalate		12000	U	680	12000
Carbazole		12000	U	680	12000
Chrysene		6900	J	900	12000
Di-n-butyl phthalate		12000	U	1800	12000
Di-n-octyl phthalate		12000	U	690	12000
4-Bromophenyl phenyl ether		12000	U	790	12000
4-Chloroaniline		12000	U	2000	12000
2-Chloronaphthalene		12000	U	520	12000
4-Chlorophenyl phenyl ether		12000	U	900	12000
Dibenz(a,h)anthracene		11000	J	960	12000
Dibenzofuran		1500	J	860	12000
Diethyl phthalate		12000	U	1200	12000
Dimethyl phthalate		12000	U	700	12000
1,2-Dichlorobenzene		12000	U	720	12000
1,3-Dichlorobenzene		12000	U	610	12000
1,4-Dichlorobenzene		12000	U	720	12000
3,3'-Dichlorobenzidine		30000	U	2500	30000
2,4-Dinitrotoluene		12000	U	970	12000
2,6-Dinitrotoluene		12000	U	360	12000
Fluoranthene		12000	J	610	12000
Fluorene		2800	J	730	12000
Hexachlorobenzene		12000	U	850	12000
Hexachlorobutadiene		12000	U	940	12000
Hexachlorocyclopentadiene		30000	U	5700	30000
Hexachloroethane		12000	U	700	12000
Indeno[1,2,3-cd]pyrene		14000		790	12000
Isophorone		12000	U	670	12000
2-Methylnaphthalene		6000	J	350	12000
Naphthalene		3300	J	630	12000
2-Nitroaniline		77000	U	740	77000
3-Nitroaniline		77000	U	390	77000
Nitrobenzene		12000	U	780	12000
N-Nitrosodi-n-propylamine		12000	U	820	12000

Client: STV Incorporated

Job Number: 220-9412-1
Sdg Number: 220-9412

Client Sample ID: **S-1**

Lab Sample ID: 220-9412-3
Client Matrix: Solid
% Moisture: 56.4
Date Sampled: 06/19/2009 1045
Date Received: 06/20/2009 0748

8270C Semivolatile Compounds by Gas Chromatography/Mass Spectrometry (GC/MS)

Method: 8270C
Preparation: 3541
Dilution: 20
Date Analyzed: 06/23/2009 1228
Date Prepared: 06/20/2009 1110
Analysis Batch: 220-28390
Prep Batch: 220-28293
Instrument ID: HP 6890/5973 GC/MS
Lab File ID: Z11432.D
Initial Weight/Volume: 15.19 g
Final Weight/Volume: 1 mL
Injection Volume: 1.0 uL

Analyte	DryWt Corrected: Y	Result (ug/Kg)	Qualifier	MDL	RL
N-Nitrosodiphenylamine		12000	U	690	12000
Phenanthrene		14000		600	12000
Pyrene		19000		570	12000
1,2,4-Trichlorobenzene		12000	U	800	12000
4-Chloro-3-methylphenol		12000	U	500	12000
2-Chlorophenol		12000	U	710	12000
2-Methylphenol		12000	U	730	12000
4-Methylphenol		12000	U	800	12000
2,4-Dichlorophenol		12000	U	650	12000
2,4-Dimethylphenol		12000	U	590	12000
2,4-Dinitrophenol		77000	U *	3700	77000
4,6-Dinitro-2-methylphenol		77000	U *	5200	77000
2-Nitrophenol		12000	U	770	12000
4-Nitrophenol		77000	U	920	77000
Pentachlorophenol		77000	U	7400	77000
Phenol		12000	U	810	12000
2,4,5-Trichlorophenol		77000	U	620	77000
2,4,6-Trichlorophenol		12000	U	330	12000
Benzyl alcohol		12000	U	1200	12000
4-Nitroaniline		12000	U	940	12000
2,2'-oxybis[1-chloropropane]		12000	U	630	12000

Surrogate	%Rec	Acceptance Limits
2-Fluorobiphenyl	92	41 - 120
2-Fluorophenol	80	34 - 120
2,4,6-Tribromophenol	94	37 - 120
Nitrobenzene-d5	93	38 - 120
Phenol-d5	95	36 - 120
Terphenyl-d14	87	32 - 125

Client: STV Incorporated

Job Number: 220-9412-1
Sdg Number: 220-9412

Client Sample ID: **S-2**

Lab Sample ID: 220-9412-4
Client Matrix: Solid

Date Sampled: 06/19/2009 1115
Date Received: 06/20/2009 0748

8270C Semivolatile Compounds by Gas Chromatography/Mass Spectrometry (GC/MS)-TCLP

Method: 8270C
Preparation: 3510C
Dilution: 1.0
Date Analyzed: 06/24/2009 1549
Date Prepared: 06/24/2009 0907
Date Leached: 06/22/2009 1600

Analysis Batch: 220-28470
Prep Batch: 220-28419
Leachate Batch: 220-28369

Instrument ID: HP 6890/5975
Lab File ID: A5795.D
Initial Weight/Volume: 250 mL
Final Weight/Volume: 0.5 mL
Injection Volume: 1.0 uL

Analyte	DryWt Corrected: N	Result (mg/L)	Qualifier	MDL	RL
1,4-Dichlorobenzene		0.020	U	0.00062	0.020
2,4-Dinitrotoluene		0.020	U	0.00080	0.020
2,4,5-Trichlorophenol		0.10	U	0.00056	0.10
2,4,6-Trichlorophenol		0.020	U	0.00074	0.020
2-Methylphenol		0.020	U	0.00048	0.020
Hexachlorobenzene		0.020	U	0.00066	0.020
Hexachlorobutadiene		0.020	U	0.00040	0.020
Hexachloroethane		0.020	U	0.00074	0.020
Nitrobenzene		0.020	U	0.00056	0.020
Pentachlorophenol		0.10	U	0.00062	0.10
Pyridine		0.040	U	0.0077	0.040
4-Methylphenol		0.020	U	0.00058	0.020

Surrogate	%Rec	Acceptance Limits
2,4,6-Tribromophenol	85	29 - 126
2-Fluorobiphenyl	60	43 - 116
2-Fluorophenol	54	21 - 97
Nitrobenzene-d5	64	38 - 113
Terphenyl-d14	88	10 - 119
Phenol-d5	52	18 - 97

Client: STV Incorporated

Job Number: 220-9412-1
Sdg Number: 220-9412

Client Sample ID: S-2

Lab Sample ID: 220-9412-4
Client Matrix: Solid
% Moisture: 53.7
Date Sampled: 06/19/2009 1115
Date Received: 06/20/2009 0748

8270C Semivolatile Compounds by Gas Chromatography/Mass Spectrometry (GC/MS)

Method: 8270C
Preparation: 3541
Dilution: 20
Date Analyzed: 06/23/2009 1255
Date Prepared: 06/22/2009 1437
Analysis Batch: 220-28390
Prep Batch: 220-28343
Instrument ID: HP 6890/5973 GC/MS
Lab File ID: Z11433.D
Initial Weight/Volume: 15.18 g
Final Weight/Volume: 1 mL
Injection Volume: 1.0 uL

Analyte	DryWt Corrected: Y	Result (ug/Kg)	Qualifier	MDL	RL
Acenaphthene		2400	J	680	12000
Acenaphthylene		2100	J	560	12000
Anthracene		7500	J	450	12000
Benzo[a]anthracene		8900	J	410	12000
Benzo[a]pyrene		7200	J	310	12000
Benzo[b]fluoranthene		5300	J	310	12000
Benzo[g,h,i]perylene		11000	J	750	12000
Benzo[k]fluoranthene		1800	J	1000	12000
Bis(2-chloroethoxy)methane		12000	U	530	12000
Bis(2-chloroethyl)ether		12000	U	600	12000
Bis(2-ethylhexyl) phthalate		110000		1100	12000
Butyl benzyl phthalate		12000	U	640	12000
Carbazole		12000	U	640	12000
Chrysene		9200	J	850	12000
Di-n-butyl phthalate		12000	U	1700	12000
Di-n-octyl phthalate		12000	U	650	12000
4-Bromophenyl phenyl ether		12000	U	740	12000
4-Chloroaniline		12000	U	1900	12000
2-Chloronaphthalene		12000	U	490	12000
4-Chlorophenyl phenyl ether		12000	U	850	12000
Dibenz(a,h)anthracene		11000	J	910	12000
Dibenzofuran		1400	J	810	12000
Diethyl phthalate		12000	U	1200	12000
Dimethyl phthalate		12000	U	660	12000
1,2-Dichlorobenzene		12000	U	680	12000
1,3-Dichlorobenzene		12000	U	580	12000
1,4-Dichlorobenzene		12000	U	680	12000
3,3'-Dichlorobenzidine		29000	U	2400	29000
2,4-Dinitrotoluene		12000	U	920	12000
2,6-Dinitrotoluene		12000	U	340	12000
Fluoranthene		15000		570	12000
Fluorene		1700	J	690	12000
Hexachlorobenzene		12000	U	800	12000
Hexachlorobutadiene		12000	U	890	12000
Hexachlorocyclopentadiene		29000	U	5400	29000
Hexachloroethane		12000	U	660	12000
Indeno[1,2,3-cd]pyrene		14000		750	12000
Isophorone		12000	U	640	12000
2-Methylnaphthalene		2200	J	330	12000
Naphthalene		2900	J	600	12000
2-Nitroaniline		73000	U	700	73000
3-Nitroaniline		73000	U	370	73000
Nitrobenzene		12000	U	730	12000
N-Nitrosodi-n-propylamine		12000	U	780	12000

Client: STV Incorporated

Job Number: 220-9412-1
Sdg Number: 220-9412

Client Sample ID: **S-2**

Lab Sample ID: 220-9412-4
Client Matrix: Solid
% Moisture: 53.7
Date Sampled: 06/19/2009 1115
Date Received: 06/20/2009 0748

8270C Semivolatile Compounds by Gas Chromatography/Mass Spectrometry (GC/MS)

Method: 8270C
Preparation: 3541
Dilution: 20
Date Analyzed: 06/23/2009 1255
Date Prepared: 06/22/2009 1437
Analysis Batch: 220-28390
Prep Batch: 220-28343
Instrument ID: HP 6890/5973 GC/MS
Lab File ID: Z11433.D
Initial Weight/Volume: 15.18 g
Final Weight/Volume: 1 mL
Injection Volume: 1.0 uL

Analyte	DryWt Corrected: Y	Result (ug/Kg)	Qualifier	MDL	RL
N-Nitrosodiphenylamine		12000	U	650	12000
Phenanthrene		8700	J	570	12000
Pyrene		21000		540	12000
1,2,4-Trichlorobenzene		12000	U	760	12000
4-Chloro-3-methylphenol		12000	U	470	12000
2-Chlorophenol		12000	U	670	12000
2-Methylphenol		12000	U	690	12000
4-Methylphenol		12000	U	760	12000
2,4-Dichlorophenol		12000	U	610	12000
2,4-Dimethylphenol		12000	U	560	12000
2,4-Dinitrophenol		73000	U	3500	73000
4,6-Dinitro-2-methylphenol		73000	U	5000	73000
2-Nitrophenol		12000	U	730	12000
4-Nitrophenol		73000	U	870	73000
Pentachlorophenol		73000	U	7000	73000
Phenol		12000	U	760	12000
2,4,5-Trichlorophenol		73000	U	580	73000
2,4,6-Trichlorophenol		12000	U	320	12000
Benzyl alcohol		12000	U	1100	12000
4-Nitroaniline		12000	U	880	12000
2,2'-oxybis[1-chloropropane]		12000	U	600	12000

Surrogate	%Rec	Acceptance Limits
2-Fluorobiphenyl	75	41 - 120
2-Fluorophenol	73	34 - 120
2,4,6-Tribromophenol	83	37 - 120
Nitrobenzene-d5	67	38 - 120
Phenol-d5	74	36 - 120
Terphenyl-d14	68	32 - 125

Client: STV Incorporated

Job Number: 220-9412-1
Sdg Number: 220-9412

Client Sample ID: **W-TANK**

Lab Sample ID: 220-9412-1
Client Matrix: Water

Date Sampled: 06/19/2009 1030
Date Received: 06/20/2009 0748

8015B Gasoline Range Organics - (GC)

Method: 8015B
Preparation: 5030B
Dilution: 1.0
Date Analyzed: 06/25/2009 1843
Date Prepared: 06/25/2009 1843

Analysis Batch: 680-141418

Instrument ID: GC Volatiles - W FID1
Lab File ID: W062507.D
Initial Weight/Volume: 20 mL
Final Weight/Volume: 20 mL
Injection Volume:
Column ID: PRIMARY

Analyte	Result (mg/L)	Qualifier	MDL	RL
Gasoline Range Organics (GRO)-C6-C10	0.018	J	0.011	0.050

Surrogate	%Rec	Acceptance Limits
a,a,a-Trifluorotoluene	98	66 - 125

Client: STV Incorporated

Job Number: 220-9412-1
Sdg Number: 220-9412

Client Sample ID: **W-EXC**

Lab Sample ID: 220-9412-2
Client Matrix: Water

Date Sampled: 06/19/2009 1000
Date Received: 06/20/2009 0748

8015B Gasoline Range Organics - (GC)

Method: 8015B
Preparation: 5030B
Dilution: 1.0
Date Analyzed: 06/25/2009 1910
Date Prepared: 06/25/2009 1910

Analysis Batch: 680-141418

Instrument ID: GC Volatiles - W FID1
Lab File ID: W062508.D
Initial Weight/Volume: 20 mL
Final Weight/Volume: 20 mL
Injection Volume:
Column ID: PRIMARY

Analyte	Result (mg/L)	Qualifier	MDL	RL
Gasoline Range Organics (GRO)-C6-C10	0.050	U	0.011	0.050

Surrogate	%Rec	Acceptance Limits
a,a,a-Trifluorotoluene	100	66 - 125

Client: STV Incorporated

Job Number: 220-9412-1
Sdg Number: 220-9412

Client Sample ID: **S-1**

Lab Sample ID: 220-9412-3
Client Matrix: Solid
% Moisture: 56.4
Date Sampled: 06/19/2009 1045
Date Received: 06/20/2009 0748

8015B Gasoline Range Organics - (GC)

Method: 8015B
Preparation: 5030A
Dilution: 20
Date Analyzed: 06/25/2009 1314
Date Prepared: 06/25/2009 1314

Analysis Batch: 680-141384

Instrument ID: GC Volatiles - W FID1
Lab File ID: W062503.D
Initial Weight/Volume: 5 mL
Final Weight/Volume: 5 mL
Injection Volume:
Column ID: PRIMARY

Analyte	DryWt Corrected: Y	Result (mg/Kg)	Qualifier	MDL	RL
Gasoline Range Organics (GRO)-C6-C10		28		0.87	11

Surrogate	%Rec	Acceptance Limits
a,a,a-Trifluorotoluene	60	53 - 121

Client: STV Incorporated

Job Number: 220-9412-1
Sdg Number: 220-9412

Client Sample ID: **S-2**

Lab Sample ID: 220-9412-4
Client Matrix: Solid

% Moisture: 53.7

Date Sampled: 06/19/2009 1115
Date Received: 06/20/2009 0748

8015B Gasoline Range Organics - (GC)

Method: 8015B
Preparation: 5030A
Dilution: 20
Date Analyzed: 06/25/2009 1338
Date Prepared: 06/25/2009 1338

Analysis Batch: 680-141384

Instrument ID: GC Volatiles - W FID1
Lab File ID: W062504.D
Initial Weight/Volume: 5 mL
Final Weight/Volume: 5 mL
Injection Volume:
Column ID: PRIMARY

Analyte	DryWt Corrected: Y	Result (mg/Kg)	Qualifier	MDL	RL
Gasoline Range Organics (GRO)-C6-C10		50		0.82	11

Surrogate	%Rec	Acceptance Limits
a,a,a-Trifluorotoluene	66	53 - 121

Client: STV Incorporated

Job Number: 220-9412-1
Sdg Number: 220-9412

Client Sample ID: **W-TANK**

Lab Sample ID: 220-9412-1
Client Matrix: Water

Date Sampled: 06/19/2009 1030
Date Received: 06/20/2009 0748

8015B Diesel Range Organics (DRO) (GC)

Method: 8015B
Preparation: 3510C
Dilution: 10
Date Analyzed: 06/25/2009 0027
Date Prepared: 06/20/2009 1314

Analysis Batch: 220-28491
Prep Batch: 220-28304

Instrument ID: HP5890 with FID/NPD
Lab File ID: C2563013.d
Initial Weight/Volume: 1000 mL
Final Weight/Volume: 1 mL
Injection Volume: 1 uL
Column ID: PRIMARY

Analyte	Result (ug/L)	Qualifier	RL	RL
Diesel Range Organics [C10-C28]	11000		5000	5000

Surrogate	%Rec	Acceptance Limits
o-Terphenyl	91	24 - 132

Client: STV Incorporated

Job Number: 220-9412-1
Sdg Number: 220-9412

Client Sample ID: **W-TANK**

Lab Sample ID: 220-9412-1
Client Matrix: Water

Date Sampled: 06/19/2009 1030
Date Received: 06/20/2009 0748

8015B Hydrocarbon Product Identification (GC)

Method: 8015B
Preparation: 3510C
Dilution: 1.0
Date Analyzed: 06/22/2009 0517
Date Prepared: 06/20/2009 1314

Analysis Batch: 220-28034
Prep Batch: 220-28304

Instrument ID: HP5890 with FID/NPD
Lab File ID: C2561438.d
Initial Weight/Volume: 1000 mL
Final Weight/Volume: 1 mL
Injection Volume: 1 uL
Column ID: PRIMARY

Surrogate	%Rec	Acceptance Limits
o-Terphenyl	126	24 - 132

Client: STV Incorporated

Job Number: 220-9412-1
Sdg Number: 220-9412

Client Sample ID: **W-EXC**

Lab Sample ID: 220-9412-2
Client Matrix: Water

Date Sampled: 06/19/2009 1000
Date Received: 06/20/2009 0748

8015B Diesel Range Organics (DRO) (GC)

Method: 8015B
Preparation: 3510C
Dilution: 1.0
Date Analyzed: 06/25/2009 0054
Date Prepared: 06/20/2009 1314

Analysis Batch: 220-28491
Prep Batch: 220-28304

Instrument ID: HP5890 with FID/NPD
Lab File ID: C2563014.d
Initial Weight/Volume: 1000 mL
Final Weight/Volume: 1 mL
Injection Volume: 1 uL
Column ID: PRIMARY

Analyte	Result (ug/L)	Qualifier	RL	RL
Diesel Range Organics [C10-C28]	890		500	500

Surrogate	%Rec	Acceptance Limits
o-Terphenyl	57	24 - 132

Client: STV Incorporated

Job Number: 220-9412-1
Sdg Number: 220-9412

Client Sample ID: **W-EXC**

Lab Sample ID: 220-9412-2
Client Matrix: Water

Date Sampled: 06/19/2009 1000
Date Received: 06/20/2009 0748

8015B Hydrocarbon Product Identification (GC)

Method: 8015B
Preparation: 3510C
Dilution: 1.0
Date Analyzed: 06/22/2009 0544
Date Prepared: 06/20/2009 1314

Analysis Batch: 220-28034
Prep Batch: 220-28304

Instrument ID: HP5890 with FID/NPD
Lab File ID: C2561439.d
Initial Weight/Volume: 1000 mL
Final Weight/Volume: 1 mL
Injection Volume: 1 uL
Column ID: PRIMARY

Surrogate	%Rec	Acceptance Limits
o-Terphenyl	62	24 - 132

Client: STV Incorporated

Job Number: 220-9412-1
Sdg Number: 220-9412

Client Sample ID: **S-1**

Lab Sample ID:	220-9412-3			Date Sampled:	06/19/2009 1045
Client Matrix:	Solid	% Moisture:	56.4	Date Received:	06/20/2009 0748

8015B Diesel Range Organics (DRO) (GC)

Method:	8015B	Analysis Batch: 220-28491		Instrument ID:	HP5890 with FID/NPD
Preparation:	3550B	Prep Batch: 220-28294		Lab File ID:	C2563015.d
Dilution:	25			Initial Weight/Volume:	30.47 g
Date Analyzed:	06/25/2009 0121			Final Weight/Volume:	1 mL
Date Prepared:	06/20/2009 1131			Injection Volume:	1 uL
				Column ID:	PRIMARY

Analyte	DryWt Corrected: Y	Result (ug/Kg)	Qualifier	RL	RL
Diesel Range Organics [C10-C28]		5100000		960000	960000

Surrogate	%Rec		Acceptance Limits
o-Terphenyl	0	*	28 - 146

Client: STV Incorporated

Job Number: 220-9412-1
Sdg Number: 220-9412

Client Sample ID: **S-2**

Lab Sample ID:	220-9412-4			Date Sampled:	06/19/2009 1115
Client Matrix:	Solid	% Moisture:	53.7	Date Received:	06/20/2009 0748

8015B Diesel Range Organics (DRO) (GC)

Method:	8015B	Analysis Batch: 220-28491		Instrument ID:	HP5890 with FID/NPD
Preparation:	3550B	Prep Batch: 220-28294		Lab File ID:	C2563016.d
Dilution:	100			Initial Weight/Volume:	30.53 g
Date Analyzed:	06/25/2009 0148			Final Weight/Volume:	1 mL
Date Prepared:	06/20/2009 1131			Injection Volume:	1 uL
				Column ID:	PRIMARY

Analyte	DryWt Corrected: Y	Result (ug/Kg)	Qualifier	RL	RL
Diesel Range Organics [C10-C28]		7000000		3600000	3600000

Surrogate	%Rec		Acceptance Limits
o-Terphenyl	0	*	28 - 146

Client: STV Incorporated

Job Number: 220-9412-1
Sdg Number: 220-9412

Client Sample ID: **S-1**

Lab Sample ID: 220-9412-3
Client Matrix: Solid

Date Sampled: 06/19/2009 1045
Date Received: 06/20/2009 0748

8081A Organochlorine Pesticides (GC)-TCLP

Method: 8081A
Preparation: 3510C
Dilution: 1.0
Date Analyzed: 06/25/2009 0143
Date Prepared: 06/23/2009 1238
Date Leached: 06/22/2009 1600

Analysis Batch: 220-28488
Prep Batch: 220-28387
Leachate Batch: 220-28369

Instrument ID: HP 6890 dual ECD
Lab File ID: C8418025.D
Initial Weight/Volume: 200 mL
Final Weight/Volume: 10 mL
Injection Volume: 1.0 uL
Column ID: PRIMARY

Analyte	DryWt Corrected: N	Result (mg/L)	Qualifier	MDL	RL
Chlordane (technical)		0.0025	U	0.00021	0.0025
Endrin		0.00050	U	0.000068	0.00050
Heptachlor		0.00025	U	0.000030	0.00025
Heptachlor epoxide		0.00025	U	0.000028	0.00025
gamma-BHC (Lindane)		0.00025	U	0.000028	0.00025
Methoxychlor		0.0025	U *	0.00041	0.0025
Toxaphene		0.012	U	0.00020	0.012

Surrogate	%Rec	Acceptance Limits
DCB Decachlorobiphenyl	70	29 - 156
Tetrachloro-m-xylene	90	53 - 144

Method: 8081A
Preparation: 3510C
Dilution: 1.0
Date Analyzed: 06/25/2009 0143
Date Prepared: 06/23/2009 1238
Date Leached: 06/22/2009 1600

Analysis Batch: 220-28488
Prep Batch: 220-28387
Leachate Batch: 220-28369

Instrument ID: HP 6890 dual ECD
Lab File ID: D8418025.D
Initial Weight/Volume: 200 mL
Final Weight/Volume: 10 mL
Injection Volume: 1.0 uL
Column ID: SECONDARY

Surrogate	%Rec	Acceptance Limits
DCB Decachlorobiphenyl	67	29 - 156
Tetrachloro-m-xylene	86	53 - 144

Client: STV Incorporated

Job Number: 220-9412-1
Sdg Number: 220-9412

Client Sample ID: **S-1**

Lab Sample ID: 220-9412-3
Client Matrix: Solid
% Moisture: 56.4
Date Sampled: 06/19/2009 1045
Date Received: 06/20/2009 0748

8081A Organochlorine Pesticides (GC)

Method: 8081A
Preparation: 3550B
Dilution: 5.0
Date Analyzed: 06/23/2009 1625
Date Prepared: 06/20/2009 1207
Analysis Batch: 220-28430
Prep Batch: 220-28296
Instrument ID: HP 5890 with dual ECD
Lab File ID: D7733047.D
Initial Weight/Volume: 30.04 g
Final Weight/Volume: 10 mL
Injection Volume: 1.0 uL
Column ID: PRIMARY

Analyte	DryWt Corrected: Y	Result (ug/Kg)	Qualifier	MDL	RL
4,4'-DDD		310		6.8	38
4,4'-DDE		130		7.7	38
4,4'-DDT		410	*	9.3	38
Aldrin		6.4	J	2.1	19
alpha-BHC		19	U	2.8	19
beta-BHC		18	J	4.3	19
delta-BHC		19	U	4.2	19
Dieldrin		180		6.5	38
Endosulfan I		19	U	3.3	19
Endosulfan II		38	U	7.1	38
Endosulfan sulfate		38	U	6.8	38
Endrin		270		7.1	38
Endrin ketone		76		6.9	38
gamma-BHC (Lindane)		19	U	3.3	19
Heptachlor		41		3.6	19
Heptachlor epoxide		27		3.4	19
Methoxychlor		96	J *	42	190
Toxaphene		950	U	100	950
alpha-Chlordane		61		3.1	19
gamma-Chlordane		94		6.1	19

Surrogate	%Rec		Acceptance Limits
DCB Decachlorobiphenyl	399	*	25 - 159
Tetrachloro-m-xylene	111		24 - 154

Method: 8081A
Preparation: 3550B
Dilution: 5.0
Date Analyzed: 06/23/2009 1625
Date Prepared: 06/20/2009 1207
Analysis Batch: 220-28430
Prep Batch: 220-28296
Instrument ID: HP 5890 with dual ECD
Lab File ID: C7733047.D
Initial Weight/Volume: 30.04 g
Final Weight/Volume: 10 mL
Injection Volume: 1.0 uL
Column ID: SECONDARY

Surrogate	%Rec		Acceptance Limits
DCB Decachlorobiphenyl	379	*	25 - 159
Tetrachloro-m-xylene	108		24 - 154

Client: STV Incorporated

Job Number: 220-9412-1
Sdg Number: 220-9412

Client Sample ID: **S-1**

Lab Sample ID:	220-9412-3			Date Sampled:	06/19/2009 1045
Client Matrix:	Solid	% Moisture:	56.4	Date Received:	06/20/2009 0748

8081A Organochlorine Pesticides (GC)

Method:	8081A	Analysis Batch: 220-28430		Instrument ID:	HP 5890 with dual ECD
Preparation:	3550B	Prep Batch: 220-28296		Lab File ID:	D7733056.D
Dilution:	5.0			Initial Weight/Volume:	30.04 g
Date Analyzed:	06/23/2009 2024			Final Weight/Volume:	10 mL
Date Prepared:	06/20/2009 1207			Injection Volume:	1.0 uL
				Column ID:	PRIMARY

Analyte	DryWt Corrected: Y	Result (ug/Kg)	Qualifier	MDL	RL
Endrin aldehyde		75		4.7	38

Client: STV Incorporated

Job Number: 220-9412-1
Sdg Number: 220-9412

Client Sample ID: **S-1**

Lab Sample ID: 220-9412-3
Client Matrix: Solid
% Moisture: 56.4
Date Sampled: 06/19/2009 1045
Date Received: 06/20/2009 0748

8081A Organochlorine Pesticides (GC)

Method: 8081A
Preparation: 3550B
Dilution: 5.0
Date Analyzed: 06/23/2009 2024
Date Prepared: 06/20/2009 1207

Analysis Batch: 220-28430
Prep Batch: 220-28296

Instrument ID: HP 5890 with dual ECD
Lab File ID: C7733056.D
Initial Weight/Volume: 30.04 g
Final Weight/Volume: 10 mL
Injection Volume: 1.0 uL
Column ID: SECONDARY

Surrogate	%Rec		Acceptance Limits
DCB Decachlorobiphenyl	280	*	25 - 159
DCB Decachlorobiphenyl	473	*	25 - 159
Tetrachloro-m-xylene	135		24 - 154
Tetrachloro-m-xylene	613	*	24 - 154

Client: STV Incorporated

Job Number: 220-9412-1
Sdg Number: 220-9412

Client Sample ID: **S-2**

Lab Sample ID: 220-9412-4
Client Matrix: Solid

Date Sampled: 06/19/2009 1115
Date Received: 06/20/2009 0748

8081A Organochlorine Pesticides (GC)-TCLP

Method: 8081A
Preparation: 3510C
Dilution: 1.0
Date Analyzed: 06/25/2009 0208
Date Prepared: 06/23/2009 1238
Date Leached: 06/22/2009 1600

Analysis Batch: 220-28488
Prep Batch: 220-28387
Leachate Batch: 220-28369

Instrument ID: HP 6890 dual ECD
Lab File ID: C8418026.D
Initial Weight/Volume: 200 mL
Final Weight/Volume: 10 mL
Injection Volume: 1.0 uL
Column ID: PRIMARY

Analyte	DryWt Corrected: N	Result (mg/L)	Qualifier	MDL	RL
Chlordane (technical)		0.0025	U	0.00021	0.0025
Endrin		0.00050	U	0.000068	0.00050
Heptachlor		0.000042	J	0.000030	0.00025
Heptachlor epoxide		0.00025	U	0.000028	0.00025
gamma-BHC (Lindane)		0.00025	U	0.000028	0.00025
Methoxychlor		0.0025	U *	0.00041	0.0025
Toxaphene		0.012	U	0.00020	0.012

Surrogate	%Rec	Acceptance Limits
DCB Decachlorobiphenyl	60	29 - 156
Tetrachloro-m-xylene	88	53 - 144

Method: 8081A
Preparation: 3510C
Dilution: 1.0
Date Analyzed: 06/25/2009 0208
Date Prepared: 06/23/2009 1238
Date Leached: 06/22/2009 1600

Analysis Batch: 220-28488
Prep Batch: 220-28387
Leachate Batch: 220-28369

Instrument ID: HP 6890 dual ECD
Lab File ID: D8418026.D
Initial Weight/Volume: 200 mL
Final Weight/Volume: 10 mL
Injection Volume: 1.0 uL
Column ID: SECONDARY

Surrogate	%Rec	Acceptance Limits
DCB Decachlorobiphenyl	59	29 - 156
Tetrachloro-m-xylene	82	53 - 144

Client: STV Incorporated

Job Number: 220-9412-1
Sdg Number: 220-9412

Client Sample ID: **S-2**

Lab Sample ID: 220-9412-4
Client Matrix: Solid
% Moisture: 53.7
Date Sampled: 06/19/2009 1115
Date Received: 06/20/2009 0748

8081A Organochlorine Pesticides (GC)

Method: 8081A
Preparation: 3550B
Dilution: 2.0
Date Analyzed: 06/23/2009 2004
Date Prepared: 06/20/2009 1207
Analysis Batch: 220-28430
Prep Batch: 220-28296
Instrument ID: HP 5890 with dual ECD
Lab File ID: C7733055.D
Initial Weight/Volume: 30.29 g
Final Weight/Volume: 10 mL
Injection Volume: 1.0 uL
Column ID: PRIMARY

Analyte	DryWt Corrected: Y	Result (ug/Kg)	Qualifier	MDL	RL
4,4'-DDD		120		2.5	14
4,4'-DDE		66		2.9	14
4,4'-DDT		260	*	3.5	14
Aldrin		7.3	U	0.77	7.3
alpha-BHC		3.0	J	1.0	7.3
beta-BHC		8.3		1.6	7.3
delta-BHC		7.3	U	1.6	7.3
Dieldrin		74		2.4	14
Endosulfan I		7.3	U	1.2	7.3
Endosulfan II		14	U	2.7	14
Endosulfan sulfate		14	U	2.5	14
Endrin		200		2.6	14
Endrin ketone		43		2.6	14
gamma-BHC (Lindane)		7.3	U	1.2	7.3
Heptachlor		26		1.4	7.3
Heptachlor epoxide		11		1.3	7.3
Methoxychlor		61	J *	16	73
Toxaphene		360	U	39	360
alpha-Chlordane		31		1.2	7.3
gamma-Chlordane		32		2.3	7.3

Surrogate	%Rec		Acceptance Limits
DCB Decachlorobiphenyl	107		25 - 159
Tetrachloro-m-xylene	26		24 - 154

Method: 8081A
Preparation: 3550B
Dilution: 2.0
Date Analyzed: 06/23/2009 2004
Date Prepared: 06/20/2009 1207
Analysis Batch: 220-28430
Prep Batch: 220-28296
Instrument ID: HP 5890 with dual ECD
Lab File ID: D7733055.D
Initial Weight/Volume: 30.29 g
Final Weight/Volume: 10 mL
Injection Volume: 1.0 uL
Column ID: SECONDARY

Surrogate	%Rec		Acceptance Limits
DCB Decachlorobiphenyl	82		25 - 159
Tetrachloro-m-xylene	23	*	24 - 154

Client: STV Incorporated

Job Number: 220-9412-1
Sdg Number: 220-9412

Client Sample ID: S-2

Lab Sample ID: 220-9412-4
Client Matrix: Solid
% Moisture: 53.7
Date Sampled: 06/19/2009 1115
Date Received: 06/20/2009 0748

8081A Organochlorine Pesticides (GC)

Method: 8081A
Preparation: 3550B
Dilution: 2.0
Date Analyzed: 06/23/2009 2044
Date Prepared: 06/20/2009 1207
Analysis Batch: 220-28430
Prep Batch: 220-28296
Instrument ID: HP 5890 with dual ECD
Lab File ID: D7733057.D
Initial Weight/Volume: 30.29 g
Final Weight/Volume: 10 mL
Injection Volume: 1.0 uL
Column ID: PRIMARY

Analyte	DryWt Corrected: Y	Result (ug/Kg)	Qualifier	MDL	RL
Endrin aldehyde		46		1.7	14

Client: STV Incorporated

Job Number: 220-9412-1
Sdg Number: 220-9412

Client Sample ID: **S-2**

Lab Sample ID:	220-9412-4			Date Sampled:	06/19/2009 1115
Client Matrix:	Solid	% Moisture:	53.7	Date Received:	06/20/2009 0748

8081A Organochlorine Pesticides (GC)

Method:	8081A	Analysis Batch: 220-28430		Instrument ID:	HP 5890 with dual ECD
Preparation:	3550B	Prep Batch: 220-28296		Lab File ID:	C7733057.D
Dilution:	2.0			Initial Weight/Volume:	30.29 g
Date Analyzed:	06/23/2009 2044			Final Weight/Volume:	10 mL
Date Prepared:	06/20/2009 1207			Injection Volume:	1.0 uL
				Column ID:	SECONDARY

Surrogate	%Rec		Acceptance Limits
DCB Decachlorobiphenyl	101		25 - 159
DCB Decachlorobiphenyl	162	*	25 - 159
Tetrachloro-m-xylene	20	*	24 - 154
Tetrachloro-m-xylene	191	*	24 - 154

Client: STV Incorporated

Job Number: 220-9412-1
Sdg Number: 220-9412

Client Sample ID: **W-TANK**

Lab Sample ID: 220-9412-1
Client Matrix: Water

Date Sampled: 06/19/2009 1030
Date Received: 06/20/2009 0748

8082 Polychlorinated Biphenyls (PCBs) by Gas Chromatography

Method: 8082
Preparation: 3510C
Dilution: 1.0
Date Analyzed: 06/22/2009 1027
Date Prepared: 06/20/2009 1308

Analysis Batch: 220-28368
Prep Batch: 220-28303

Instrument ID: HP 6890 dual ECD
Lab File ID: C9043990.D
Initial Weight/Volume: 1000 mL
Final Weight/Volume: 10 mL
Injection Volume: 1.0 uL
Column ID: PRIMARY

Analyte	Result (ug/L)	Qualifier	MDL	RL
PCB-1016	0.50	U	0.050	0.50
PCB-1221	0.50	U	0.050	0.50
PCB-1232	0.50	U	0.050	0.50
PCB-1242	1.6		0.050	0.50
PCB-1248	0.50	U	0.050	0.50
PCB-1254	2.3		0.082	0.50
PCB-1260	2.2		0.082	0.50

Surrogate	%Rec		Acceptance Limits
Tetrachloro-m-xylene	29		22 - 145
DCB Decachlorobiphenyl	26	*	29 - 135

Method: 8082
Preparation: 3510C
Dilution: 1.0
Date Analyzed: 06/22/2009 1027
Date Prepared: 06/20/2009 1308

Analysis Batch: 220-28368
Prep Batch: 220-28303

Instrument ID: HP 6890 dual ECD
Lab File ID: D9043990.D
Initial Weight/Volume: 1000 mL
Final Weight/Volume: 10 mL
Injection Volume: 1.0 uL
Column ID: SECONDARY

Surrogate	%Rec		Acceptance Limits
Tetrachloro-m-xylene	28		22 - 145
DCB Decachlorobiphenyl	24	*	29 - 135

Client: STV Incorporated

Job Number: 220-9412-1
Sdg Number: 220-9412

Client Sample ID: **W-EXC**

Lab Sample ID: 220-9412-2
Client Matrix: Water

Date Sampled: 06/19/2009 1000
Date Received: 06/20/2009 0748

8082 Polychlorinated Biphenyls (PCBs) by Gas Chromatography

Method: 8082
Preparation: 3510C
Dilution: 1.0
Date Analyzed: 06/22/2009 1046
Date Prepared: 06/20/2009 1308

Analysis Batch: 220-28368
Prep Batch: 220-28303

Instrument ID: HP 6890 dual ECD
Lab File ID: D9043991.D
Initial Weight/Volume: 1000 mL
Final Weight/Volume: 10 mL
Injection Volume: 1.0 uL
Column ID: PRIMARY

Analyte	Result (ug/L)	Qualifier	MDL	RL
PCB-1016	0.50	U	0.050	0.50
PCB-1221	0.50	U	0.050	0.50
PCB-1232	0.50	U	0.050	0.50
PCB-1242	0.50	U	0.050	0.50
PCB-1248	0.50	U	0.050	0.50
PCB-1254	0.50	U	0.082	0.50
PCB-1260	0.50	U	0.082	0.50

Surrogate	%Rec		Acceptance Limits
Tetrachloro-m-xylene	65		22 - 145
DCB Decachlorobiphenyl	27	*	29 - 135

Client: STV Incorporated

Job Number: 220-9412-1
Sdg Number: 220-9412

Client Sample ID: **S-1**

Lab Sample ID: 220-9412-3
Client Matrix: Solid
% Moisture: 56.4
Date Sampled: 06/19/2009 1045
Date Received: 06/20/2009 0748

8082 Polychlorinated Biphenyls (PCBs) by Gas Chromatography

Method: 8082
Preparation: 3550B
Dilution: 2.0
Date Analyzed: 06/23/2009 1241
Date Prepared: 06/22/2009 1349
Analysis Batch: 220-28393
Prep Batch: 220-28341
Instrument ID: HP 6890 dual ECD
Lab File ID: C90431051.D
Initial Weight/Volume: 30.40 g
Final Weight/Volume: 10 mL
Injection Volume: 1.0 uL
Column ID: PRIMARY

Analyte	DryWt Corrected: Y	Result (ug/Kg)	Qualifier	MDL	RL
PCB-1016		77	U	6.0	77
PCB-1221		77	U	6.0	77
PCB-1232		77	U	6.0	77
PCB-1242		590		6.0	77
PCB-1248		77	U	6.0	77
PCB-1254		520		6.5	77
PCB-1260		760		6.5	77

Surrogate	%Rec	Acceptance Limits
Tetrachloro-m-xylene	24	24 - 150
DCB Decachlorobiphenyl	84	24 - 150

Method: 8082
Preparation: 3550B
Dilution: 2.0
Date Analyzed: 06/23/2009 1241
Date Prepared: 06/22/2009 1349
Analysis Batch: 220-28393
Prep Batch: 220-28341
Instrument ID: HP 6890 dual ECD
Lab File ID: D90431051.D
Initial Weight/Volume: 30.40 g
Final Weight/Volume: 10 mL
Injection Volume: 1.0 uL
Column ID: SECONDARY

Surrogate	%Rec	Acceptance Limits
Tetrachloro-m-xylene	23	24 - 150
DCB Decachlorobiphenyl	77	24 - 150

Client: STV Incorporated

Job Number: 220-9412-1
Sdg Number: 220-9412

Client Sample ID: **S-2**

Lab Sample ID: 220-9412-4
Client Matrix: Solid
% Moisture: 53.7
Date Sampled: 06/19/2009 1115
Date Received: 06/20/2009 0748

8082 Polychlorinated Biphenyls (PCBs) by Gas Chromatography

Method: 8082
Preparation: 3550B
Dilution: 5.0
Date Analyzed: 06/23/2009 1222
Date Prepared: 06/22/2009 1349
Analysis Batch: 220-28393
Prep Batch: 220-28341
Instrument ID: HP 6890 dual ECD
Lab File ID: C90431050.D
Initial Weight/Volume: 30.20 g
Final Weight/Volume: 10 mL
Injection Volume: 1.0 uL
Column ID: PRIMARY

Analyte	DryWt Corrected: Y Result (ug/Kg)	Qualifier	MDL	RL
PCB-1016	180	U	14	180
PCB-1221	180	U	14	180
PCB-1232	180	U	14	180
PCB-1242	720		14	180
PCB-1248	180	U	14	180
PCB-1254	1100		15	180
PCB-1260	890		15	180

Surrogate	%Rec		Acceptance Limits
Tetrachloro-m-xylene	90		24 - 150
DCB Decachlorobiphenyl	190	*	24 - 150

Method: 8082
Preparation: 3550B
Dilution: 5.0
Date Analyzed: 06/23/2009 1222
Date Prepared: 06/22/2009 1349
Analysis Batch: 220-28393
Prep Batch: 220-28341
Instrument ID: HP 6890 dual ECD
Lab File ID: C90431050.D
Initial Weight/Volume: 30.20 g
Final Weight/Volume: 10 mL
Injection Volume: 1.0 uL
Column ID: SECONDARY

Surrogate	%Rec		Acceptance Limits
Tetrachloro-m-xylene	85		24 - 150
DCB Decachlorobiphenyl	188	*	24 - 150

Client: STV Incorporated

Job Number: 220-9412-1
Sdg Number: 220-9412

Client Sample ID: S-1

Lab Sample ID: 220-9412-3
Client Matrix: Solid

Date Sampled: 06/19/2009 1045
Date Received: 06/20/2009 0748

8151A Herbicides (GC)-TCLP

Method:	8151A	Analysis Batch: 680-141545		Instrument ID:	GC SemiVolatiles - S
Preparation:	8151A	Prep Batch: 680-141206		Lab File ID:	sf26008.d
Dilution:	1.0	Leachate Batch: 680-141157		Initial Weight/Volume:	10 mL
Date Analyzed:	06/26/2009 1622			Final Weight/Volume:	10 mL
Date Prepared:	06/24/2009 1009			Injection Volume:	1 uL
Date Leached:	06/23/2009 1520			Column ID:	PRIMARY

Analyte	DryWt Corrected: N	Result (mg/L)	Qualifier	MDL	RL
2,4-D		0.050	U	0.050	0.050
Silvex (2,4,5-TP)		0.050	U	0.050	0.050

Surrogate	%Rec	Acceptance Limits
DCAA	104	50 - 150

Client: STV Incorporated

Job Number: 220-9412-1
Sdg Number: 220-9412

Client Sample ID: **S-1**

Lab Sample ID: 220-9412-3
Client Matrix: Solid
% Moisture: 56.4
Date Sampled: 06/19/2009 1045
Date Received: 06/20/2009 0748

8151A Herbicides (GC)

Method: 8151A
Preparation: 8151A
Dilution: 20
Date Analyzed: 06/26/2009 2121
Date Prepared: 06/23/2009 1302
Analysis Batch: 680-141545
Prep Batch: 680-141123
Instrument ID: GC SemiVolatiles - S
Lab File ID: sf26024.d
Initial Weight/Volume: 30.2 g
Final Weight/Volume: 10 mL
Injection Volume: 1 uL
Column ID: PRIMARY

Analyte	DryWt Corrected: Y Result (ug/Kg)	Qualifier	MDL	RL
2,4-D	380	U	230	380
2,4-DB	380	U	140	380
2,4,5-T	380	U	100	380
Silvex (2,4,5-TP)	380	U	73	380
Dalapon	15000	U	130	15000
Dicamba	380	U	86	380
Dichlorprop	380	U	50	380
Dinoseb	4600	U	210	4600
MCPA	91000	U *	8600	91000
Mecoprop	91000	U	7700	91000
Pentachlorophenol	380	U	19	380

Surrogate	%Rec		Acceptance Limits
DCAA	0	D	58 - 110

Client: STV Incorporated

Job Number: 220-9412-1
Sdg Number: 220-9412

Client Sample ID: S-2

Lab Sample ID: 220-9412-4
Client Matrix: Solid

Date Sampled: 06/19/2009 1115
Date Received: 06/20/2009 0748

8151A Herbicides (GC)-TCLP

Method: 8151A
Preparation: 8151A
Dilution: 1.0
Date Analyzed: 06/26/2009 1641
Date Prepared: 06/24/2009 1009
Date Leached: 06/23/2009 1520

Analysis Batch: 680-141545
Prep Batch: 680-141206
Leachate Batch: 680-141157

Instrument ID: GC SemiVolatiles - S
Lab File ID: sf26009.d
Initial Weight/Volume: 10 mL
Final Weight/Volume: 10 mL
Injection Volume: 1 uL
Column ID: PRIMARY

Analyte	DryWt Corrected: N	Result (mg/L)	Qualifier	MDL	RL
2,4-D		0.050	U	0.050	0.050
Silvex (2,4,5-TP)		0.050	U	0.050	0.050

Surrogate	%Rec	Acceptance Limits
DCAA	96	50 - 150

Client: STV Incorporated

Job Number: 220-9412-1
Sdg Number: 220-9412

Client Sample ID: **S-2**

Lab Sample ID: 220-9412-4
Client Matrix: Solid
% Moisture: 53.7
Date Sampled: 06/19/2009 1115
Date Received: 06/20/2009 0748

8151A Herbicides (GC)

Method: 8151A
Preparation: 8151A
Dilution: 1.0
Date Analyzed: 06/26/2009 1834
Date Prepared: 06/23/2009 1302
Analysis Batch: 680-141545
Prep Batch: 680-141123
Instrument ID: GC SemiVolatiles - S
Lab File ID: sf26015.d
Initial Weight/Volume: 30.2 g
Final Weight/Volume: 10 mL
Injection Volume: 1 uL
Column ID: PRIMARY

Analyte	DryWt Corrected: Y Result (ug/Kg)	Qualifier	MDL	RL
2,4-D	18	U	11	18
2,4-DB	18	U	6.4	18
2,4,5-T	18	U	4.9	18
Silvex (2,4,5-TP)	18	U	3.4	18
Dalapon	710	U	6.2	710
Dicamba	18	U	4.1	18
Dichlorprop	18	U	2.4	18
Dinoseb	210	U	9.9	210
MCPA	4300	U *	410	4300
Mecoprop	4300	U	360	4300
Pentachlorophenol	18	U	0.90	18

Surrogate	%Rec		Acceptance Limits
DCAA	1240	E *	58 - 110

Client: STV Incorporated

Job Number: 220-9412-1
Sdg Number: 220-9412

Client Sample ID: **W-TANK**

Lab Sample ID: 220-9412-1
Client Matrix: Water

Date Sampled: 06/19/2009 1030
Date Received: 06/20/2009 0748

6020 Metals (ICP/MS)

Method: 6020
Preparation: 3010A
Dilution: 5.0
Date Analyzed: 06/24/2009 1248
Date Prepared: 06/23/2009 1156

Analysis Batch: 220-28480
Prep Batch: 220-28380

Instrument ID: Agilent ICPMS
Lab File ID: N/A
Initial Weight/Volume: 100 mL
Final Weight/Volume: 500 mL

Analyte	Result (ug/L)	Qualifier	MDL	RL
Silver	12.5	U	2.5	12.5
Arsenic	25.8		2.5	12.5
Beryllium	12.5	U	2.5	12.5
Cadmium	13.1		2.5	12.5
Chromium	101		5.0	25.0
Copper	290		2.5	25.0
Nickel	126		2.5	12.5
Lead	280		2.5	12.5
Antimony	16.2	J	5.0	20.0
Selenium	25.0	U	5.0	25.0
Thallium	17.5	U	5.0	17.5
Zinc	506		12.5	125

7470A Mercury (CVAA)

Method: 7470A
Preparation: 7470A
Dilution: 1.0
Date Analyzed: 06/23/2009 1451
Date Prepared: 06/23/2009 1121

Analysis Batch: 220-28406
Prep Batch: 220-28377

Instrument ID: Perkin Elmer FIMS
Lab File ID: N/A
Initial Weight/Volume: 25 mL
Final Weight/Volume: 50 mL

Analyte	Result (ug/L)	Qualifier	MDL	RL
Mercury	0.44		0.060	0.20

Client: STV Incorporated

Job Number: 220-9412-1
Sdg Number: 220-9412

Client Sample ID: **W-EXC**

Lab Sample ID: 220-9412-2
Client Matrix: Water

Date Sampled: 06/19/2009 1000
Date Received: 06/20/2009 0748

6020 Metals (ICP/MS)

Method:	6020	Analysis Batch: 220-28480	Instrument ID: Agilent ICPMS
Preparation:	3010A	Prep Batch: 220-28380	Lab File ID: N/A
Dilution:	5.0		Initial Weight/Volume: 100 mL
Date Analyzed:	06/24/2009 1252		Final Weight/Volume: 500 mL
Date Prepared:	06/23/2009 1156		

Analyte	Result (ug/L)	Qualifier	MDL	RL
Silver	12.5	U	2.5	12.5
Arsenic	7.3	J	2.5	12.5
Beryllium	12.5	U	2.5	12.5
Cadmium	12.5	U	2.5	12.5
Chromium	18.4	J	5.0	25.0
Copper	54.8		2.5	25.0
Nickel	30.0		2.5	12.5
Lead	47.0		2.5	12.5
Antimony	20.0	U	5.0	20.0
Selenium	25.0	U	5.0	25.0
Thallium	17.5	U	5.0	17.5
Zinc	103	J	12.5	125

7470A Mercury (CVAA)

Method:	7470A	Analysis Batch: 220-28406	Instrument ID: Perkin Elmer FIMS
Preparation:	7470A	Prep Batch: 220-28377	Lab File ID: N/A
Dilution:	1.0		Initial Weight/Volume: 25 mL
Date Analyzed:	06/23/2009 1452		Final Weight/Volume: 50 mL
Date Prepared:	06/23/2009 1121		

Analyte	Result (ug/L)	Qualifier	MDL	RL
Mercury	0.20	U	0.060	0.20

Client: STV Incorporated

Job Number: 220-9412-1
Sdg Number: 220-9412

Client Sample ID: **S-1**

Lab Sample ID: 220-9412-3
Client Matrix: Solid

Date Sampled: 06/19/2009 1045
Date Received: 06/20/2009 0748

6010B Metals (ICP)-TCLP

Method:	6010B	Analysis Batch: 220-28513		Instrument ID:	Perkin Elmer ICP
Preparation:	3010A	Prep Batch: 220-28372		Lab File ID:	N/A
Dilution:	1.0	Leachate Batch: 220-28369		Initial Weight/Volume:	20 mL
Date Analyzed:	06/25/2009 1438			Final Weight/Volume:	50 mL
Date Prepared:	06/23/2009 1038				
Date Leached:	06/22/2009 1600				

Analyte	DryWt Corrected: N	Result (mg/L)	Qualifier	MDL	RL
Arsenic		0.064	J	0.020	0.075
Barium		0.33		0.0012	0.025
Cadmium		0.025	U	0.0050	0.025
Chromium		0.023	J	0.0025	0.025
Lead		0.075	U	0.012	0.075
Selenium		0.19	U	0.062	0.19
Silver		0.025	U	0.0012	0.025

6020 Metals (ICP/MS)

Method:	6020	Analysis Batch: 220-28480		Instrument ID:	Agilent ICPMS
Preparation:	3050B	Prep Batch: 220-28339		Lab File ID:	N/A
Dilution:	1.0			Initial Weight/Volume:	1.15 g
Date Analyzed:	06/24/2009 1331			Final Weight/Volume:	1000 mL
Date Prepared:	06/22/2009 1337				

Analyte	DryWt Corrected: Y	Result (mg/Kg)	Qualifier	MDL	RL
Silver		11.2		0.20	1.0
Arsenic		45.6		0.20	1.0
Beryllium		0.70	J	0.30	1.0
Cadmium		51.6		0.20	1.0
Chromium		342		0.40	2.0
Copper		974		0.20	2.0
Nickel		392		0.20	1.0
Lead		607		0.20	1.0
Antimony		8.5		0.40	1.6
Selenium		8.8		0.60	2.0
Thallium		0.56	J	0.40	1.4
Zinc		1350		1.0	10

Client: STV Incorporated

Job Number: 220-9412-1
Sdg Number: 220-9412

Client Sample ID: **S-1**

Lab Sample ID: 220-9412-3
Client Matrix: Solid

Date Sampled: 06/19/2009 1045
Date Received: 06/20/2009 0748

7470A Mercury (CVAA)-TCLP

Method:	7470A	Analysis Batch: 220-28406		Instrument ID:	Perkin Elmer FIMS
Preparation:	7470A	Prep Batch: 220-28377		Lab File ID:	N/A
Dilution:	1.0	Leachate Batch: 220-28369		Initial Weight/Volume:	5 mL
Date Analyzed:	06/23/2009 1515			Final Weight/Volume:	50 mL
Date Prepared:	06/23/2009 1121				
Date Leached:	06/22/2009 1600				

Analyte	DryWt Corrected: N	Result (mg/L)	Qualifier	MDL	RL
Mercury		0.0020	U	0.0010	0.0020

7471A Mercury (CVAA)

Method:	7471A	Analysis Batch: 220-28474		Instrument ID:	Perkin Elmer FIMS
Preparation:	7471A	Prep Batch: 220-28373		Lab File ID:	N/A
Dilution:	5.0			Initial Weight/Volume:	0.62 g
Date Analyzed:	06/24/2009 1546			Final Weight/Volume:	50 mL
Date Prepared:	06/23/2009 1058				

Analyte	DryWt Corrected: Y	Result (mg/Kg)	Qualifier	MDL	RL
Mercury		2.4		0.044	0.55

Client: STV Incorporated

Job Number: 220-9412-1
Sdg Number: 220-9412

Client Sample ID: **S-2**

Lab Sample ID: 220-9412-4
Client Matrix: Solid

Date Sampled: 06/19/2009 1115
Date Received: 06/20/2009 0748

6010B Metals (ICP)-TCLP

Method: 6010B
Preparation: 3010A
Dilution: 1.0
Date Analyzed: 06/25/2009 1441
Date Prepared: 06/23/2009 1038
Date Leached: 06/22/2009 1600

Analysis Batch: 220-28513
Prep Batch: 220-28372
Leachate Batch: 220-28369

Instrument ID: Perkin Elmer ICP
Lab File ID: N/A
Initial Weight/Volume: 20 mL
Final Weight/Volume: 50 mL

Analyte	DryWt Corrected: N	Result (mg/L)	Qualifier	MDL	RL
Arsenic		0.075	U	0.020	0.075
Barium		0.34		0.0012	0.025
Cadmium		0.025	U	0.0050	0.025
Chromium		0.038		0.0025	0.025
Lead		0.075	U	0.012	0.075
Selenium		0.19	U	0.062	0.19
Silver		0.025	U	0.0012	0.025

6020 Metals (ICP/MS)

Method: 6020
Preparation: 3050B
Dilution: 1.0
Date Analyzed: 06/24/2009 1348
Date Prepared: 06/22/2009 1337

Analysis Batch: 220-28480
Prep Batch: 220-28339

Instrument ID: Agilent ICPMS
Lab File ID: N/A
Initial Weight/Volume: 1.45 g
Final Weight/Volume: 1000 mL

Analyte	DryWt Corrected: Y	Result (mg/Kg)	Qualifier	MDL	RL
Silver		19.5		0.15	0.74
Arsenic		34.0		0.15	0.74
Beryllium		0.80		0.22	0.74
Cadmium		104		0.15	0.74
Chromium		530		0.30	1.5
Copper		1450		0.15	1.5
Nickel		337		0.15	0.74
Lead		1370		0.15	0.74
Antimony		7.3		0.30	1.2
Selenium		5.0		0.45	1.5
Thallium		0.31	J	0.30	1.0
Zinc		2240		0.74	7.4

Client: STV Incorporated

Job Number: 220-9412-1
Sdg Number: 220-9412

Client Sample ID: **S-2**

Lab Sample ID: 220-9412-4
Client Matrix: Solid

Date Sampled: 06/19/2009 1115
Date Received: 06/20/2009 0748

7470A Mercury (CVAA)-TCLP

Method:	7470A	Analysis Batch: 220-28406		Instrument ID:	Perkin Elmer FIMS
Preparation:	7470A	Prep Batch: 220-28377		Lab File ID:	N/A
Dilution:	1.0	Leachate Batch: 220-28369		Initial Weight/Volume:	5 mL
Date Analyzed:	06/23/2009 1516			Final Weight/Volume:	50 mL
Date Prepared:	06/23/2009 1121				
Date Leached:	06/22/2009 1600				

Analyte	DryWt Corrected: N	Result (mg/L)	Qualifier	MDL	RL
Mercury		0.0020	U	0.0010	0.0020

7471A Mercury (CVAA)

Method:	7471A	Analysis Batch: 220-28474		Instrument ID:	Perkin Elmer FIMS
Preparation:	7471A	Prep Batch: 220-28373		Lab File ID:	N/A
Dilution:	5.0			Initial Weight/Volume:	0.60 g
Date Analyzed:	06/24/2009 1547			Final Weight/Volume:	50 mL
Date Prepared:	06/23/2009 1058				

Analyte	DryWt Corrected: Y	Result (mg/Kg)	Qualifier	MDL	RL
Mercury		2.6		0.043	0.54

General Chemistry

Client Sample ID: **S-1**

Lab Sample ID: 220-9412-3
Client Matrix: Solid
% Moisture: 56.4
Date Sampled: 06/19/2009 1045
Date Received: 06/20/2009 0748

Analyte	Result	Qual	Units	MDL	RL	Dil	Method
Chromium, hexavalent	2.2	U	mg/Kg	0.24	2.2	1.0	7196A
	Anly Batch: 680-141487	Date Analyzed		06/26/2009 1319		DryWt Corrected: Y	
	Prep Batch: 680-141389	Date Prepared:		06/25/2009 1528			

Analyte	Result	Qual	Units	RL	RL	Dil	Method
Ignitability	neg		mm/sec	2.2	2.2	1.0	1030
	Anly Batch: 220-28346	Date Analyzed		06/22/2009 1446		DryWt Corrected: N	
Temperature	1890		Fahrenheit	1.00	1.00	1.0	1030
	Anly Batch: 220-28346	Date Analyzed		06/22/2009 1446		DryWt Corrected: N	
Cyanide, Reactive	0.50	U	mg/Kg	0.50	0.50	1.0	9012
	Anly Batch: 220-28401	Date Analyzed		06/23/2009 1344		DryWt Corrected: N	
	Prep Batch: 220-28376	Date Prepared:		06/22/2009 1425			
Sulfide, Reactive	372		mg/Kg	20.0	20.0	1.0	9034
	Anly Batch: 220-28438	Date Analyzed		06/24/2009 1042		DryWt Corrected: N	
	Prep Batch: 220-28436	Date Prepared:		06/22/2009 1505			
pH	8.52	HF	SU	0.100	0.100	1.0	9045C
	Anly Batch: 220-28443	Date Analyzed		06/24/2009 1213		DryWt Corrected: N	
Percent Moisture	56.4		%	0.10	0.10	1.0	Moisture
	Anly Batch: 220-28326	Date Analyzed		06/22/2009 1138			
Percent Solids	43.6		%	0.10	0.10	1.0	Moisture
	Anly Batch: 220-28326	Date Analyzed		06/22/2009 1138			

General Chemistry

Client Sample ID: S-2

Lab Sample ID: 220-9412-4
Client Matrix: Solid

% Moisture: 53.7

Date Sampled: 06/19/2009 1115
Date Received: 06/20/2009 0748

Analyte	Result	Qual	Units	MDL	RL	Dil	Method
Chromium, hexavalent	2.1	U	mg/Kg	0.23	2.1	1.0	7196A
	Anly Batch: 680-141487	Date Analyzed		06/26/2009 1319		DryWt Corrected: Y	
	Prep Batch: 680-141389	Date Prepared:		06/25/2009 1528			

Analyte	Result	Qual	Units	RL	RL	Dil	Method
Ignitability	neg		mm/sec	2.2	2.2	1.0	1030
	Anly Batch: 220-28346	Date Analyzed		06/22/2009 1448		DryWt Corrected: N	
Temperature	1890		Fahrenheit	1.00	1.00	1.0	1030
	Anly Batch: 220-28346	Date Analyzed		06/22/2009 1448		DryWt Corrected: N	
Cyanide, Reactive	0.50	U	mg/Kg	0.50	0.50	1.0	9012
	Anly Batch: 220-28401	Date Analyzed		06/23/2009 1345		DryWt Corrected: N	
	Prep Batch: 220-28376	Date Prepared:		06/22/2009 1425			
Sulfide, Reactive	644		mg/Kg	19.9	19.9	1.0	9034
	Anly Batch: 220-28438	Date Analyzed		06/24/2009 1051		DryWt Corrected: N	
	Prep Batch: 220-28436	Date Prepared:		06/22/2009 1505			
pH	8.34	HF	SU	0.100	0.100	1.0	9045C
	Anly Batch: 220-28443	Date Analyzed		06/24/2009 1219		DryWt Corrected: N	
Percent Moisture	53.7		%	0.10	0.10	1.0	Moisture
	Anly Batch: 220-28326	Date Analyzed		06/22/2009 1138			
Percent Solids	46.3		%	0.10	0.10	1.0	Moisture
	Anly Batch: 220-28326	Date Analyzed		06/22/2009 1138			

DATA REPORTING QUALIFIERS

Client: STV Incorporated

Job Number: 220-9412-1
Sdg Number: 220-9412

Lab Section	Qualifier	Description
GC/MS VOA		
	U	Analyzed for but not detected.
	J	Indicates an estimated value.
	*	LCS or LCSD exceeds the control limits
	*	Surrogate exceeds the control limit
	B	The analyte was found in an associated blank, as well as in the sample.
GC/MS Semi VOA		
	U	Analyzed for but not detected.
	J	Indicates an estimated value.
	*	LCS or LCSD exceeds the control limits
GC VOA		
	U	Analyzed for but not detected.
	J	Indicates an estimated value.
GC Semi VOA		
	U	Analyzed for but not detected.
	E	Compound concentration exceeds the upper level of the calibration range of the instrument for that specific analysis.
	*	Duplicate RPD exceeds control limits
	J	Indicates an estimated value.
	*	LCS or LCSD exceeds the control limits
	*	MS or MSD exceeds the control limits
	*	Surrogate exceeds the control limit
	D	The reported value is from a dilution.

DATA REPORTING QUALIFIERS

Client: STV Incorporated

Job Number: 220-9412-1
Sdg Number: 220-9412

Lab Section	Qualifier	Description
Metals		
	U	Indicates analyzed for but not detected.
	4	MS, MSD: The analyte present in the original sample is 4 times greater than the matrix spike concentration; therefore, control limits are not applicable.
	J	Sample result is greater than the MDL but below the CRDL
	N	Spiked sample recovery is not within control limits.
General Chemistry		
	HF	Field parameter with a holding time of 15 minutes
	U	Indicates analyzed for but not detected.

Chain of Custody Record

SEVERN TRENT **STL**
Severn Trent Laboratories, Inc.

9412

STL 4124 (0901)

Client: STV Inc	Project Manager: Mike Tumalty	Date: 6/19/09	Chain of Custody Number: 351398
Address: 225 Park Ave South	Telephone Number (Area Code)/Fax Number: (212) 614-3369	Lab Number: per BC 6/22 JMD	Page 1 of 1
City: New York; State: NY; Zip Code: 10003	Site Contact: Brian Connolly	Lab Contact: Jill	
Project Name and Location (State): Bordon Ave Bridge, New York	Carrier/Waybill Number:		
Contract/Purchase Order/Quote No:			

Analysis (Attach list if more space is needed)

Sample I.D. No. and Description (Containers for each sample may be combined on one line)	Date	Time	Matrix: Air	Aqueous	Sed.	Soil	Containers & Preservatives: Unpres.	H2SO4	HNO3	HCl	NaOH	ZnAc/NaOH	TCL VOCs	TCL SVOCs	PCBs	Pest/Herb.	PPL METALS	CR (VI)	TCLP	TPHC - DRO/GRO Fingerprint	Fingerprint TPHC	DRO/GRO	RCRA char	per B.C. 6/22/09 - JMD	Special Instructions/ Conditions of Receipt
	6/19/09																								
1) W-Tank		1030											X	X	X		X			X					All Containers in 7.8°C Cooler
2) W-Exc		1000											X	X	X		X			X					All Containers in 7.8°C Cooler
3) S-1		1045											X	X	X	X	X	X	X	X	X	X	X		KB 6/20/09
4) S-2		1115											X	X	X	X	X	X	X	X	X	X	X		

Possible Hazard Identification: ☑ Non-Hazard ☐ Flammable ☐ Skin Irritant ☐ Poison B ☐ Unknown

Sample Disposal: ☐ Return To Client ☐ Disposal By Lab ☐ Archive For _____ Months (A fee may be assessed if samples are retained longer than 1 month)

Turn Around Time Required: ☑ 24 Hours ☐ 48 Hours ☐ 7 Days ☐ 14 Days ☐ 21 Days ☐ Other _____

QC Requirements (Specify): Samples collected by Richard Hart (516) 328-1194 if questio

	Date	Time		Date	Time
1. Relinquished By: [signature]	6/19/09	3:05	1. Received By: [signature]	6/19/09	3:05
2. Relinquished By:			2. Received By: K Blocker	6/20/09	748
3. Relinquished By:			3. Received By:		

Comments: 0.6°C, 7.8°C gun #1 bags of melted ice.

PASSED RAD SCREEN

DISTRIBUTION: WHITE - Returned to Client with Report; CANARY - Stays with the Sample; PINK - Field Copy

ESTAMERICA CONNECTICUT
RESERVATIVE RECORD

Job Number:
Client:
Client Project:

Lab Number	Preservative	pH	Adjustment (mLs)	pH after Adjustment	Preservative Lot Number	Initials	Date
9412- 01	HNO3	<2	N/A	N/A	N/A	KB	6/20/09
02	↓	<2	↓	↓	↓	↓	↓
01	HCL	<2	↓	↓	↓	↓	↓
02	↓	<2	↓	↓	↓	↓	↓

TestAmerica - Connecticut
Internal Chain-of-Custody

220-9412
STV- Borden Ave Bridge

24 hr TAT

Lab Blank:

QC: Air:

FB:

Soil: 3-4 Water: 1-2

Date Received: 6/20/09

Sample #s: 1-4

Locations: 99D, R-11, A5, R-22

Laboratory Sample #	Signature-Sample Removal	Date	Time	Reason	Signature-Sample Return	Date	Time
1-4		6/20/09	1105	Ext.			
3-4		6/20/09	1105	Ext.		6/20/09	1710
3-4		6/20/09	1030	VOA TRIP		6/20/09	1700
3-4	MC	6/22	12:20	MTL		6/22/09	1430
1,2		6/22	13:30	VOA			
3&4		6-22	13:20	EXT		6/22	1510
B-4		6/22	1515	ALK		6/22	1600
3-4		6/23	1025	MOD		6-23	1300
1-2	MC	6/23	10:55	MTL	MC	6/23	13:05
1,2		6/22/09	10:40	pH		6/24/09	12:30

Page 69 of 71

06/29/2009

TestAmerica Form# SMF03300.CT

Login Sample Receipt Check List

Client: STV Incorporated

Job Number: 220-9412-1
SDG Number: 220-9412

Login Number: 9412
Creator: Blocker, Kristina
List Number: 1

List Source: TestAmerica Connecticut

Question	T / F/ NA	Comment
Radioactivity either was not measured or, if measured, is at or below background	True	
The cooler's custody seal, if present, is intact.	True	
The cooler or samples do not appear to have been compromised or tampered with.	True	
Samples were received on ice.	True	7.8C cooler bags of melted ice/water.
Cooler Temperature is acceptable.	False	
Cooler Temperature is recorded.	True	0.6C, 7.8C
COC is present.	True	
COC is filled out in ink and legible.	True	
COC is filled out with all pertinent information.	True	
There are no discrepancies between the sample IDs on the containers and the COC.	True	
Samples are received within Holding Time.	True	
Sample containers have legible labels.	True	
Containers are not broken or leaking.	True	
Sample collection date/times are provided.	True	
Appropriate sample containers are used.	True	
Sample bottles are completely filled.	True	
There is sufficient vol. for all requested analyses, incl. any requested MS/MSDs	True	
VOA sample vials do not have headspace or bubble is <6mm (1/4") in diameter.	True	
If necessary, staff have been informed of any short hold time or quick TAT needs	True	
Multiphasic samples are not present.	True	
Samples do not require splitting or compositing.	True	
Is the Field Sampler's name present on COC?	True	

Login Sample Receipt Check List

Client: STV Incorporated

Job Number: 220-9412-1
SDG Number: 220-9412

Login Number: 9412
Creator: Daughtry, Beth
List Number: 1

List Source: TestAmerica Savannah
List Creation: 06/23/09 10:36 AM

Question	T / F/ NA	Comment
Radioactivity either was not measured or, if measured, is at or below background	N/A	
The cooler's custody seal, if present, is intact.	True	
The cooler or samples do not appear to have been compromised or tampered with.	True	
Samples were received on ice.	True	
Cooler Temperature is acceptable.	True	
Cooler Temperature is recorded.	True	
COC is present.	True	
COC is filled out in ink and legible.	True	
COC is filled out with all pertinent information.	True	
There are no discrepancies between the sample IDs on the containers and the COC.	True	
Samples are received within Holding Time.	True	
Sample containers have legible labels.	True	
Containers are not broken or leaking.	True	
Sample collection date/times are provided.	True	
Appropriate sample containers are used.	True	
Sample bottles are completely filled.	True	
There is sufficient vol. for all requested analyses, incl. any requested MS/MSDs	True	
VOA sample vials do not have headspace or bubble is <6mm (1/4") in diameter.	True	
If necessary, staff have been informed of any short hold time or quick TAT needs	True	
Multiphasic samples are not present.	N/A	
Samples do not require splitting or compositing.	N/A	
Is the Field Sampler's name present on COC?	N/A	

TestAmerica

THE LEADER IN ENVIRONMENTAL TESTING

ANALYTICAL REPORT

Job Number: 220-9412-1

SDG Number: 220-9412

Job Description: Borden Ave Bridge

For:
STV Incorporated
225 Park Avenue South
New York, NY 10003

Attention: Mr. Brian Connolly

Approved for release.
Patty A Meraure
6/29/2009 1:01 PM

Designee for
Jill M Duhancik
Project Manager I
jill.duhancik@testamericainc.com
06/29/2009

The test results in this report meet all NELAP requirements unless specified within the case narrative. Pursuant to NELAP, this report may not be reproduced, except in full, without the written approval of the laboratory. All questions regarding this report should be directed to the TestAmerica Project Manager.

TestAmerica Connecticut Certifications and Approvals: CTDOH PH-047, MADEP CT023, RIDOH A43, NYDOH 10602, NY NELAP 10602, NHDES 2528, NJDEP CT410, ME DOH CT023, UT DOH 2032614458

TestAmerica Laboratories, Inc.
TestAmerica Connecticut 128 Long Hill Cross Road, Shelton, CT 06484
Tel (203) 929-8140 Fax (203) 929-8142 www.testamericainc.com

ACCREDITED IN ACCORDANCE WITH nelac

Case Narrative for Job: 220-9412-1

Client: STV Incorporated
Date: June 29, 2009

I certify that this data package is in compliance with the terms and conditions of this contract, both technically and for completeness, for other than the conditions detailed above. Release of the data contained in this hardcopy data package and in the computer-readable data submitted on diskette has been authorized by the Laboratory Manager or his designee, as verified by the following signature.

Lawrence Decker
Laboratory Director

June 29, 2009
Date

Job Narrative
220-J9412-1

Comments
No additional comments.

Receipt
Method(s) 8015B: The container label for the following samples did not match the information listed on the Chain-of-Custody (COC): S-1 (220-9412-3), S-2 (220-9412-4). The container labels list S-2 is on the container label time list 11:15 and S-1 is listed on the container cap while the COC lists ?. There are two samples a- 3 and a - 4, both times list 11:15 June 19 2009 and both labels list S-2 as the sample IDS. One cap list S-1 and the other cap list S-2.

All other samples were received in good condition within temperature requirements.

GC/MS VOA
Method(s) 8260B: Surrogate recovery for the following sample was outside control limits: S-1 (220-9412-3). Evidence of matrix interference is present; re-analysis was performed and confirmed. The first set of data was reported.

No other analytical or quality issues were noted.

GC/MS Semi VOA
Method(s) 8270C: Internal standard (ISTD) response for the following sample was outside control limits: W-TANK (220-9412-1). The sample was re-analyzed with concurring results. The original set of data has been reported.

No other analytical or quality issues were noted.

GC VOA
No analytical or quality issues were noted.

GC Semi VOA
Method(s) 8015B: The laboratory analyzes the following compounds for fingerprint analysis: #2 Fuel Oil, #4 Fuel Oil, #6 Fuel Oil, Kerosene, Gasoline, Motor Oil, and Coal Tar. The elution pattern present in the client's samples are compared to these standards to determine the best match. The carbon range for the following samples is between a #6 Fuel Oil and motor oil, however, because of differences of such magnitude, it is impossible to determine whether the unknown is a combination of the two or a completely different oil:S-1 (220-9412-3), S-2 (220-9412-4), W-EXC (220-9412-2), W-TANK (220-9412-1)

Method(s) 8081A: The capping continuing calibration verification (CCV) analyzed on 6/23/09 on GC-hp-6890-8 failed on both columns. These samples were analyzed in another bracket with concurring results.

Method(s) 8081A: The continuing calibration verification (CCV) for 6/24/09 recovered above the upper control limit. The samples associated with this CCV were non-detects for the affected analytes; therefore, the data have been reported.

No other analytical or quality issues were noted.

Metals
No analytical or quality issues were noted.

General Chemistry
Method(s) 9045C: This analysis is normally performed in the field and has a method-defined holding time of 15 minutes. All associated samples have been qualified with the "HF" flag to indicate they were performed in the laboratory outside the 15 minute timeframe.

No other analytical or quality issues were noted.

Organic Prep
No analytical or quality issues were noted.

VOA Prep
No analytical or quality issues were noted.

EXECUTIVE SUMMARY - Detections

Client: STV Incorporated

Job Number: 220-9412-1
Sdg Number: 220-9412

Lab Sample ID / Analyte	Client Sample ID	Result / Qualifier		Reporting Limit	Units	Method
220-9412-1	W-TANK					
Acetone		16	*	10	ug/L	8260B
Acenaphthene		3.6	J	17	ug/L	8270C
Acenaphthylene		2.2	J	17	ug/L	8270C
Anthracene		5.4	J	17	ug/L	8270C
Benzo[a]anthracene		8.6	J	17	ug/L	8270C
Benzo[a]pyrene		5.3	J	17	ug/L	8270C
Benzo[b]fluoranthene		4.4	J	17	ug/L	8270C
Benzo[g,h,i]perylene		6.5	J	17	ug/L	8270C
Benzo[k]fluoranthene		1.7	J	17	ug/L	8270C
Bis(2-ethylhexyl) phthalate		290		17	ug/L	8270C
Chrysene		8.3	J	17	ug/L	8270C
Dibenz(a,h)anthracene		3.1	J	17	ug/L	8270C
Dibenzofuran		2.1	J	17	ug/L	8270C
Fluoranthene		17		17	ug/L	8270C
Fluorene		3.5	J	17	ug/L	8270C
Indeno[1,2,3-cd]pyrene		4.0	J	17	ug/L	8270C
2-Methylnaphthalene		2.5	J	17	ug/L	8270C
Naphthalene		1.9	J	17	ug/L	8270C
Phenanthrene		13	J	17	ug/L	8270C
Pyrene		19		17	ug/L	8270C
Gasoline Range Organics (GRO)-C6-C10		0.018	J	0.050	mg/L	8015B
Diesel Range Organics [C10-C28]		11000		5000	ug/L	8015B
PCB-1242		1.6		0.50	ug/L	8082
PCB-1254		2.3		0.50	ug/L	8082
PCB-1260		2.2		0.50	ug/L	8082
Arsenic		25.8		12.5	ug/L	6020
Cadmium		13.1		12.5	ug/L	6020
Chromium		101		25.0	ug/L	6020
Copper		290		25.0	ug/L	6020
Nickel		126		12.5	ug/L	6020
Lead		280		12.5	ug/L	6020
Antimony		16.2	J	20.0	ug/L	6020
Zinc		506		125	ug/L	6020
Mercury		0.44		0.20	ug/L	7470A

EXECUTIVE SUMMARY - Detections

Client: STV Incorporated

Job Number: 220-9412-1
Sdg Number: 220-9412

Lab Sample ID / Analyte	Client Sample ID	Result / Qualifier		Reporting Limit	Units	Method
220-9412-2	W-EXC					
Acetone		6.2	J *	10	ug/L	8260B
Acenaphthene		0.66	J	4.1	ug/L	8270C
Anthracene		0.56	J	4.1	ug/L	8270C
Benzo[a]anthracene		0.74	J	4.1	ug/L	8270C
Benzo[a]pyrene		0.60	J	4.1	ug/L	8270C
Benzo[b]fluoranthene		0.52	J	4.1	ug/L	8270C
Benzo[g,h,i]perylene		1.6	J	4.1	ug/L	8270C
Bis(2-ethylhexyl) phthalate		17		4.1	ug/L	8270C
Chrysene		0.66	J	4.1	ug/L	8270C
Di-n-butyl phthalate		0.40	J	4.1	ug/L	8270C
Fluoranthene		1.7	J	4.1	ug/L	8270C
Fluorene		0.57	J	4.1	ug/L	8270C
Indeno[1,2,3-cd]pyrene		0.92	J	4.1	ug/L	8270C
Naphthalene		0.38	J	4.1	ug/L	8270C
Phenanthrene		1.4	J	4.1	ug/L	8270C
Pyrene		2.2	J	4.1	ug/L	8270C
Diesel Range Organics [C10-C28]		890		500	ug/L	8015B
Arsenic		7.3	J	12.5	ug/L	6020
Chromium		18.4	J	25.0	ug/L	6020
Copper		54.8		25.0	ug/L	6020
Nickel		30.0		12.5	ug/L	6020
Lead		47.0		12.5	ug/L	6020
Zinc		103	J	125	ug/L	6020

EXECUTIVE SUMMARY - Detections

Client: STV Incorporated

Job Number: 220-9412-1
Sdg Number: 220-9412

Lab Sample ID / Analyte	Client Sample ID	Result / Qualifier		Reporting Limit	Units	Method
220-9412-3	S-1					
Acetone		210	J *	230	ug/Kg	8260B
Benzene		27	J	57	ug/Kg	8260B
Carbon disulfide		11	J	57	ug/Kg	8260B
Ethylbenzene		50	J	57	ug/Kg	8260B
Methylene Chloride		100	J B	230	ug/Kg	8260B
1,1,2,2-Tetrachloroethane		390		57	ug/Kg	8260B
Xylenes, Total		300		57	ug/Kg	8260B
Acenaphthene		2000	J	12000	ug/Kg	8270C
Anthracene		5000	J	12000	ug/Kg	8270C
Benzo[a]anthracene		6200	J	12000	ug/Kg	8270C
Benzo[a]pyrene		6400	J	12000	ug/Kg	8270C
Benzo[b]fluoranthene		5000	J	12000	ug/Kg	8270C
Benzo[g,h,i]perylene		11000	J	12000	ug/Kg	8270C
Benzo[k]fluoranthene		1900	J	12000	ug/Kg	8270C
Bis(2-ethylhexyl) phthalate		130000		12000	ug/Kg	8270C
Chrysene		6900	J	12000	ug/Kg	8270C
Dibenz(a,h)anthracene		11000	J	12000	ug/Kg	8270C
Dibenzofuran		1500	J	12000	ug/Kg	8270C
Fluoranthene		12000	J	12000	ug/Kg	8270C
Fluorene		2800	J	12000	ug/Kg	8270C
Indeno[1,2,3-cd]pyrene		14000		12000	ug/Kg	8270C
2-Methylnaphthalene		6000	J	12000	ug/Kg	8270C
Naphthalene		3300	J	12000	ug/Kg	8270C
Phenanthrene		14000		12000	ug/Kg	8270C
Pyrene		19000		12000	ug/Kg	8270C
Gasoline Range Organics (GRO)-C6-C10		28		11	mg/Kg	8015B
Diesel Range Organics [C10-C28]		5100000		960000	ug/Kg	8015B
4,4'-DDD		310		38	ug/Kg	8081A
4,4'-DDE		130		38	ug/Kg	8081A
4,4'-DDT		410	*	38	ug/Kg	8081A
Aldrin		6.4	J	19	ug/Kg	8081A
beta-BHC		18	J	19	ug/Kg	8081A
Dieldrin		180		38	ug/Kg	8081A
Endrin		270		38	ug/Kg	8081A
Endrin aldehyde		75		38	ug/Kg	8081A
Endrin ketone		76		38	ug/Kg	8081A
Heptachlor		41		19	ug/Kg	8081A
Heptachlor epoxide		27		19	ug/Kg	8081A
Methoxychlor		96	J *	190	ug/Kg	8081A
alpha-Chlordane		61		19	ug/Kg	8081A
gamma-Chlordane		94		19	ug/Kg	8081A
PCB-1242		590		77	ug/Kg	8082
PCB-1254		520		77	ug/Kg	8082
PCB-1260		760		77	ug/Kg	8082
Silver		11.2		1.0	mg/Kg	6020
Arsenic		45.6		1.0	mg/Kg	6020
Beryllium		0.70	J	1.0	mg/Kg	6020
Cadmium		51.6		1.0	mg/Kg	6020

EXECUTIVE SUMMARY - Detections

Client: STV Incorporated

Job Number: 220-9412-1
Sdg Number: 220-9412

Lab Sample ID / Client Sample ID / Analyte	Result / Qualifier		Reporting Limit	Units	Method
Chromium	342		2.0	mg/Kg	6020
Copper	974		2.0	mg/Kg	6020
Nickel	392		1.0	mg/Kg	6020
Lead	607		1.0	mg/Kg	6020
Antimony	8.5		1.6	mg/Kg	6020
Selenium	8.8		2.0	mg/Kg	6020
Thallium	0.56	J	1.4	mg/Kg	6020
Zinc	1350		10	mg/Kg	6020
Mercury	2.4		0.55	mg/Kg	7471A
Ignitability	neg		2.2	mm/sec	1030
Temperature	1890		1.00	Fahrenheit	1030
Sulfide, Reactive	372		20.0	mg/Kg	9034
pH	8.52	HF	0.100	SU	9045C
Percent Moisture	56.4		0.10	%	Moisture
Percent Solids	43.6		0.10	%	Moisture
TCLP					
Methyl Ethyl Ketone	0.0084	J B	0.010	mg/L	8260B
Benzene	0.00082	J	0.0050	mg/L	8260B
Arsenic	0.064	J	0.075	mg/L	6010B
Barium	0.33		0.025	mg/L	6010B
Chromium	0.023	J	0.025	mg/L	6010B

EXECUTIVE SUMMARY - Detections

Client: STV Incorporated

Job Number: 220-9412-1
Sdg Number: 220-9412

Lab Sample ID / Analyte	Client Sample ID	Result / Qualifier		Reporting Limit	Units	Method
220-9412-4	S-2					
Acetone		340	*	220	ug/Kg	8260B
Benzene		10	J	54	ug/Kg	8260B
Carbon disulfide		20	J	54	ug/Kg	8260B
Ethylbenzene		19	J	54	ug/Kg	8260B
Methylene Chloride		98	J B	220	ug/Kg	8260B
Toluene		2.4	J B	54	ug/Kg	8260B
Xylenes, Total		90		54	ug/Kg	8260B
Acenaphthene		2400	J	12000	ug/Kg	8270C
Acenaphthylene		2100	J	12000	ug/Kg	8270C
Anthracene		7500	J	12000	ug/Kg	8270C
Benzo[a]anthracene		8900	J	12000	ug/Kg	8270C
Benzo[a]pyrene		7200	J	12000	ug/Kg	8270C
Benzo[b]fluoranthene		5300	J	12000	ug/Kg	8270C
Benzo[g,h,i]perylene		11000	J	12000	ug/Kg	8270C
Benzo[k]fluoranthene		1800	J	12000	ug/Kg	8270C
Bis(2-ethylhexyl) phthalate		110000		12000	ug/Kg	8270C
Chrysene		9200	J	12000	ug/Kg	8270C
Dibenz(a,h)anthracene		11000	J	12000	ug/Kg	8270C
Dibenzofuran		1400	J	12000	ug/Kg	8270C
Fluoranthene		15000		12000	ug/Kg	8270C
Fluorene		1700	J	12000	ug/Kg	8270C
Indeno[1,2,3-cd]pyrene		14000		12000	ug/Kg	8270C
2-Methylnaphthalene		2200	J	12000	ug/Kg	8270C
Naphthalene		2900	J	12000	ug/Kg	8270C
Phenanthrene		8700	J	12000	ug/Kg	8270C
Pyrene		21000		12000	ug/Kg	8270C
Gasoline Range Organics (GRO)-C6-C10		50		11	mg/Kg	8015B
Diesel Range Organics [C10-C28]		7000000		3600000	ug/Kg	8015B
4,4'-DDD		120		14	ug/Kg	8081A
4,4'-DDE		66		14	ug/Kg	8081A
4,4'-DDT		260	*	14	ug/Kg	8081A
alpha-BHC		3.0	J	7.3	ug/Kg	8081A
beta-BHC		8.3		7.3	ug/Kg	8081A
Dieldrin		74		14	ug/Kg	8081A
Endrin		200		14	ug/Kg	8081A
Endrin aldehyde		46		14	ug/Kg	8081A
Endrin ketone		43		14	ug/Kg	8081A
Heptachlor		26		7.3	ug/Kg	8081A
Heptachlor epoxide		11		7.3	ug/Kg	8081A
Methoxychlor		61	J *	73	ug/Kg	8081A
alpha-Chlordane		31		7.3	ug/Kg	8081A
gamma-Chlordane		32		7.3	ug/Kg	8081A
PCB-1242		720		180	ug/Kg	8082
PCB-1254		1100		180	ug/Kg	8082
PCB-1260		890		180	ug/Kg	8082
Silver		19.5		0.74	mg/Kg	6020
Arsenic		34.0		0.74	mg/Kg	6020
Beryllium		0.80		0.74	mg/Kg	6020

EXECUTIVE SUMMARY - Detections

Client: STV Incorporated

Job Number: 220-9412-1
Sdg Number: 220-9412

Lab Sample ID / Client Sample ID / Analyte	Result / Qualifier		Reporting Limit	Units	Method
Cadmium	104		0.74	mg/Kg	6020
Chromium	530		1.5	mg/Kg	6020
Copper	1450		1.5	mg/Kg	6020
Nickel	337		0.74	mg/Kg	6020
Lead	1370		0.74	mg/Kg	6020
Antimony	7.3		1.2	mg/Kg	6020
Selenium	5.0		1.5	mg/Kg	6020
Thallium	0.31	J	1.0	mg/Kg	6020
Zinc	2240		7.4	mg/Kg	6020
Mercury	2.6		0.54	mg/Kg	7471A
Ignitability	neg		2.2	mm/sec	1030
Temperature	1890		1.00	Fahrenheit	1030
Sulfide, Reactive	644		19.9	mg/Kg	9034
pH	8.34	HF	0.100	SU	9045C
Percent Moisture	53.7		0.10	%	Moisture
Percent Solids	46.3		0.10	%	Moisture
TCLP					
Methyl Ethyl Ketone	0.0085	J B	0.010	mg/L	8260B
Benzene	0.0018	J	0.0050	mg/L	8260B
Heptachlor	0.000042	J	0.00025	mg/L	8081A
Barium	0.34		0.025	mg/L	6010B
Chromium	0.038		0.025	mg/L	6010B

METHOD SUMMARY

Client: STV Incorporated

Job Number: 220-9412-1
Sdg Number: 220-9412

Description	Lab Location	Method	Preparation Method
Matrix Solid			
Volatile Organic Compounds (GC/MS)	TAL CT	SW846 8260B	
TCLP Extraction	TAL CT		SW846 1311
Purge and Trap	TAL CT		SW846 5030B
Semivolatile Compounds by Gas Chromatography/Mass Spectrometry (GC/MS)	TAL CT	SW846 8270C	
TCLP Extraction	TAL CT		SW846 1311
Liquid-Liquid Extraction (Separatory Funnel)	TAL CT		SW846 3510C
Automated Soxhlet Extraction	TAL CT		SW846 3541
Gasoline Range Organics - (GC)	TAL SAV	SW846 8015B	
Purge and Trap	TAL SAV		SW846 5030A
Diesel Range Organics (DRO) (GC)	TAL CT	SW846 8015B	
Hydrocarbon Product Identification (GC)	TAL CT	SW846 8015B	
Ultrasonic Extraction	TAL CT		SW846 3550B
Ultrasonic Extraction	TAL CT		SW846 3550B
Organochlorine Pesticides (GC)	TAL CT	SW846 8081A	
TCLP Extraction	TAL CT		SW846 1311
Liquid-Liquid Extraction (Separatory Funnel)	TAL CT		SW846 3510C
Ultrasonic Extraction	TAL CT		SW846 3550B
Polychlorinated Biphenyls (PCBs) by Gas Chromatography	TAL CT	SW846 8082	
Ultrasonic Extraction	TAL CT		SW846 3550B
Herbicides (GC)	TAL SAV	SW846 8151A	
TCLP Extraction	TAL SAV		SW846 1311
Extraction (Herbicides)	TAL SAV		SW846 8151A
Metals (ICP)	TAL CT	SW846 6010B	
TCLP Extraction	TAL CT		SW846 1311
Preparation, Total Metals	TAL CT		SW846 3010A
Metals (ICP/MS)	TAL CT	SW846 6020	
Preparation, Metals	TAL CT		SW846 3050B
Mercury (CVAA)	TAL CT	SW846 7470A	
TCLP Extraction	TAL CT		SW846 1311
Preparation, Mercury	TAL CT		SW846 7470A
Mercury (CVAA)	TAL CT	SW846 7471A	
Preparation, Mercury	TAL CT		SW846 7471A
Ignitability, Solids	TAL CT	SW846 1030	
Chromium, Hexavalent	TAL SAV	SW846 7196A	
Alkaline Digestion (Chromium, Hexavalent)	TAL SAV		SW846 3060A
Cyanide, Reactive	TAL CT	SW846 9012	
Cyanide, Reactive	TAL CT		SW846 7.3.3
Sulfide, Reactive	TAL CT	SW846 9034	
Sulfide, Reactive	TAL CT		SW846 7.3.4

METHOD SUMMARY

Client: STV Incorporated

Job Number: 220-9412-1
Sdg Number: 220-9412

Description	Lab Location	Method	Preparation Method
Matrix Solid			
pH	TAL CT	SW846 9045C	
Percent Moisture	TAL CT	EPA Moisture	
Matrix Water			
Volatile Organic Compounds (GC/MS)	TAL CT	SW846 8260B	
Purge and Trap	TAL CT		SW846 5030B
Semivolatile Compounds by Gas Chromatography/Mass Spectrometry (GC/MS)	TAL CT	SW846 8270C	
Liquid-Liquid Extraction (Separatory Funnel)	TAL CT		SW846 3510C
Gasoline Range Organics - (GC)	TAL SAV	SW846 8015B	
Purge and Trap	TAL SAV		SW846 5030B
Diesel Range Organics (DRO) (GC)	TAL CT	SW846 8015B	
Hydrocarbon Product Identification (GC)	TAL CT	SW846 8015B	
Liquid-Liquid Extraction (Separatory Funnel)	TAL CT		SW846 3510C
Liquid-Liquid Extraction (Separatory Funnel)	TAL CT		SW846 3510C
Polychlorinated Biphenyls (PCBs) by Gas Chromatography	TAL CT	SW846 8082	
Liquid-Liquid Extraction (Separatory Funnel)	TAL CT		SW846 3510C
Metals (ICP/MS)	TAL CT	SW846 6020	
Preparation, Total Metals	TAL CT		SW846 3010A
Mercury (CVAA)	TAL CT	SW846 7470A	
Preparation, Mercury	TAL CT		SW846 7470A

Lab References:

TAL CT = TestAmerica Connecticut

TAL SAV = TestAmerica Savannah

Method References:

EPA = US Environmental Protection Agency

SW846 = "Test Methods For Evaluating Solid Waste, Physical/Chemical Methods", Third Edition, November 1986 And Its Updates.

METHOD / ANALYST SUMMARY

Client: STV Incorporated

Job Number: 220-9412-1
Sdg Number: 220-9412

Method	Analyst	Analyst ID
SW846 8260B	Kostrzewska, Barbara	BK
SW846 8260B	Paveglio, Peter R	PRP
SW846 8270C	Jonas, Stephan	SJ
SW846 8015B	Moncrief, Amy	AM
SW846 8015B	Widomski, Sarah	SW
SW846 8081A	Cooper, Susan	SC
SW846 8082	Smith, Karli	KS
SW846 8151A	Kellar, Joshua	JK
SW846 6010B	Petronchak, Nestor	NP
SW846 6020	Petronchak, Nestor	NP
SW846 7470A	Voytek, Joseph F	JFV
SW846 7471A	Voytek, Joseph F	JFV
SW846 1030	Tillotson, Ray	RT
SW846 7196A	Ross, Jon	JR
SW846 9012	Natoli, Richard A	RN
SW846 9034	Natoli, Richard A	RN
SW846 9045C	Mendoza, Julia	JM
EPA Moisture	Capece, Bill	BC

SAMPLE SUMMARY

Client: STV Incorporated

Job Number: 220-9412-1
Sdg Number: 220-9412

Lab Sample ID	Client Sample ID	Client Matrix	Date/Time Sampled	Date/Time Received
220-9412-1	W-TANK	Water	06/19/2009 1030	06/20/2009 0748
220-9412-2	W-EXC	Water	06/19/2009 1000	06/20/2009 0748
220-9412-3	S-1	Solid	06/19/2009 1045	06/20/2009 0748
220-9412-4	S-2	Solid	06/19/2009 1115	06/20/2009 0748

SAMPLE RESULTS

Client: STV Incorporated

Job Number: 220-9412-1
Sdg Number: 220-9412

Client Sample ID: **W-TANK**

Lab Sample ID: 220-9412-1
Client Matrix: Water

Date Sampled: 06/19/2009 1030
Date Received: 06/20/2009 0748

8260B Volatile Organic Compounds (GC/MS)

Method: 8260B
Preparation: 5030B
Dilution: 1.0
Date Analyzed: 06/22/2009 1416
Date Prepared: 06/22/2009 1416

Analysis Batch: 220-28342

Instrument ID: HP 5890/5971 GC/MS
Lab File ID: L5665.D
Initial Weight/Volume: 5 mL
Final Weight/Volume: 5 mL

Analyte	Result (ug/L)	Qualifier	MDL	RL
Acetone	16	*	1.0	10
Benzene	5.0	U	0.74	5.0
Bromodichloromethane	5.0	U	0.48	5.0
Bromoform	5.0	U	0.46	5.0
Bromomethane	5.0	U	2.1	5.0
Methyl Ethyl Ketone	10	U *	1.1	10
Carbon disulfide	5.0	U	0.90	5.0
Carbon tetrachloride	5.0	U	1.1	5.0
Chlorobenzene	5.0	U	0.72	5.0
Chloroethane	5.0	U	1.1	5.0
Chloroform	5.0	U	0.67	5.0
Chloromethane	5.0	U	1.1	5.0
Dibromochloromethane	5.0	U	0.55	5.0
1,1-Dichloroethane	5.0	U	1.0	5.0
1,2-Dichloroethane	5.0	U	0.72	5.0
1,1-Dichloroethene	5.0	U	0.83	5.0
1,2-Dichloropropane	5.0	U	0.71	5.0
cis-1,3-Dichloropropene	5.0	U	0.28	5.0
trans-1,3-Dichloropropene	5.0	U	0.57	5.0
Ethylbenzene	5.0	U	0.87	5.0
2-Hexanone	10	U	1.1	10
Methylene Chloride	5.0	U	0.78	5.0
methyl isobutyl ketone	10	U	0.38	10
Styrene	5.0	U	0.64	5.0
1,1,2,2-Tetrachloroethane	5.0	U	0.81	5.0
Tetrachloroethene	5.0	U	0.81	5.0
Toluene	5.0	U	0.72	5.0
1,1,1-Trichloroethane	5.0	U	0.69	5.0
1,1,2-Trichloroethane	5.0	U	0.65	5.0
Trichloroethene	5.0	U	0.62	5.0
Vinyl chloride	5.0	U	0.99	5.0
Xylenes, Total	5.0	U	2.3	5.0
cis-1,2-Dichloroethene	5.0	U	0.99	5.0
trans-1,2-Dichloroethene	5.0	U	0.76	5.0

Surrogate	%Rec	Acceptance Limits
1,2-Dichloroethane-d4 (Surr)	113	65 - 136
4-Bromofluorobenzene	115	51 - 142
Dibromofluoromethane	112	68 - 132
Toluene-d8 (Surr)	117	63 - 127

Client: STV Incorporated

Job Number: 220-9412-1
Sdg Number: 220-9412

Client Sample ID: **W-EXC**

Lab Sample ID: 220-9412-2
Client Matrix: Water

Date Sampled: 06/19/2009 1000
Date Received: 06/20/2009 0748

8260B Volatile Organic Compounds (GC/MS)

Method: 8260B
Preparation: 5030B
Dilution: 1.0
Date Analyzed: 06/22/2009 1352
Date Prepared: 06/22/2009 1352

Analysis Batch: 220-28342

Instrument ID: HP 5890/5971 GC/MS
Lab File ID: L5664.D
Initial Weight/Volume: 5 mL
Final Weight/Volume: 5 mL

Analyte	Result (ug/L)	Qualifier	MDL	RL
Acetone	6.2	J *	1.0	10
Benzene	5.0	U	0.74	5.0
Bromodichloromethane	5.0	U	0.48	5.0
Bromoform	5.0	U	0.46	5.0
Bromomethane	5.0	U	2.1	5.0
Methyl Ethyl Ketone	10	U *	1.1	10
Carbon disulfide	5.0	U	0.90	5.0
Carbon tetrachloride	5.0	U	1.1	5.0
Chlorobenzene	5.0	U	0.72	5.0
Chloroethane	5.0	U	1.1	5.0
Chloroform	5.0	U	0.67	5.0
Chloromethane	5.0	U	1.1	5.0
Dibromochloromethane	5.0	U	0.55	5.0
1,1-Dichloroethane	5.0	U	1.0	5.0
1,2-Dichloroethane	5.0	U	0.72	5.0
1,1-Dichloroethene	5.0	U	0.83	5.0
1,2-Dichloropropane	5.0	U	0.71	5.0
cis-1,3-Dichloropropene	5.0	U	0.28	5.0
trans-1,3-Dichloropropene	5.0	U	0.57	5.0
Ethylbenzene	5.0	U	0.87	5.0
2-Hexanone	10	U	1.1	10
Methylene Chloride	5.0	U	0.78	5.0
methyl isobutyl ketone	10	U	0.38	10
Styrene	5.0	U	0.64	5.0
1,1,2,2-Tetrachloroethane	5.0	U	0.81	5.0
Tetrachloroethene	5.0	U	0.81	5.0
Toluene	5.0	U	0.72	5.0
1,1,1-Trichloroethane	5.0	U	0.69	5.0
1,1,2-Trichloroethane	5.0	U	0.65	5.0
Trichloroethene	5.0	U	0.62	5.0
Vinyl chloride	5.0	U	0.99	5.0
Xylenes, Total	5.0	U	2.3	5.0
cis-1,2-Dichloroethene	5.0	U	0.99	5.0
trans-1,2-Dichloroethene	5.0	U	0.76	5.0

Surrogate	%Rec	Acceptance Limits
1,2-Dichloroethane-d4 (Surr)	113	65 - 136
4-Bromofluorobenzene	119	51 - 142
Dibromofluoromethane	114	68 - 132
Toluene-d8 (Surr)	115	63 - 127

Client: STV Incorporated

Job Number: 220-9412-1
Sdg Number: 220-9412

Client Sample ID: **S-1**

Lab Sample ID: 220-9412-3
Client Matrix: Solid

Date Sampled: 06/19/2009 1045
Date Received: 06/20/2009 0748

8260B Volatile Organic Compounds (GC/MS)-TCLP

Method: 8260B
Preparation: 5030B
Dilution: 1.0
Date Analyzed: 06/23/2009 1311
Date Prepared: 06/23/2009 1311
Date Leached: 06/22/2009 1032

Analysis Batch: 220-28395

Leachate Batch: 220-28315

Instrument ID: HP 6890/5973 GC/MS
Lab File ID: W6282.D
Initial Weight/Volume: 5 mL
Final Weight/Volume: 5 mL

Analyte	DryWt Corrected: N	Result (mg/L)	Qualifier	MDL	RL
Vinyl chloride		0.0050	U	0.00098	0.0050
1,1-Dichloroethene		0.0050	U	0.00083	0.0050
Methyl Ethyl Ketone		0.0084	J B	0.0011	0.010
Chloroform		0.0050	U	0.00067	0.0050
Carbon tetrachloride		0.0050	U	0.0011	0.0050
Benzene		0.00082	J	0.00074	0.0050
1,2-Dichloroethane		0.0050	U	0.00072	0.0050
Trichloroethene		0.0050	U	0.00062	0.0050
Tetrachloroethene		0.0050	U	0.00081	0.0050
Chlorobenzene		0.0050	U	0.00072	0.0050

Surrogate	%Rec	Acceptance Limits
1,2-Dichloroethane-d4 (Surr)	102	65 - 136
4-Bromofluorobenzene	108	51 - 142
Dibromofluoromethane	98	68 - 132
Toluene-d8 (Surr)	104	63 - 127

Client: STV Incorporated

Job Number: 220-9412-1
Sdg Number: 220-9412

Client Sample ID: S-1

Lab Sample ID: 220-9412-3
Client Matrix: Solid

% Moisture: 56.4

Date Sampled: 06/19/2009 1045
Date Received: 06/20/2009 0748

8260B Volatile Organic Compounds (GC/MS)

Method: 8260B
Preparation: 5030B
Dilution: 5.0
Date Analyzed: 06/22/2009 1640
Date Prepared: 06/22/2009 1640

Analysis Batch: 220-28348

Instrument ID: HP 5890/5971A GC/MS
Lab File ID: O1277.D
Initial Weight/Volume: 5 g
Final Weight/Volume: 5 mL

Analyte	DryWt Corrected: Y	Result (ug/Kg)	Qualifier	MDL	RL
Acetone		210	J *	26	230
Benzene		27	J	6.5	57
Bromodichloromethane		57	U	3.4	57
Bromoform		57	U	7.0	57
Bromomethane		57	U	24	57
Methyl Ethyl Ketone		110	U	18	110
Carbon disulfide		11	J	4.7	57
Carbon tetrachloride		57	U	11	57
Chlorobenzene		57	U	6.8	57
Chloroethane		57	U	11	57
Chloroform		57	U	3.9	57
Chloromethane		57	U	8.9	57
Dibromochloromethane		57	U	4.0	57
1,1-Dichloroethane		57	U	3.4	57
1,2-Dichloroethane		57	U	6.6	57
1,1-Dichloroethene		57	U	6.6	57
1,2-Dichloropropane		57	U	7.7	57
cis-1,3-Dichloropropene		57	U	6.4	57
trans-1,3-Dichloropropene		57	U	3.1	57
Ethylbenzene		50	J	8.0	57
2-Hexanone		110	U	14	110
Methylene Chloride		100	J B	12	230
methyl isobutyl ketone		57	U	6.3	57
Styrene		57	U	1.7	57
1,1,2,2-Tetrachloroethane		390		6.0	57
Tetrachloroethene		57	U	9.3	57
Toluene		57	U	0.85	57
1,1,1-Trichloroethane		57	U	6.1	57
1,1,2-Trichloroethane		57	U	4.2	57
Trichloroethene		57	U	9.3	57
Vinyl chloride		57	U	2.6	57
Xylenes, Total		300		5.6	57
cis-1,2-Dichloroethene		57	U	4.2	57
trans-1,2-Dichloroethene		57	U	4.5	57

Surrogate	%Rec		Acceptance Limits
1,2-Dichloroethane-d4 (Surr)	73		59 - 132
4-Bromofluorobenzene	102		34 - 124
Dibromofluoromethane	64		59 - 123
Toluene-d8 (Surr)	43	*	50 - 118

Client: STV Incorporated

Job Number: 220-9412-1
Sdg Number: 220-9412

Client Sample ID: **S-2**

Lab Sample ID: 220-9412-4
Client Matrix: Solid

Date Sampled: 06/19/2009 1115
Date Received: 06/20/2009 0748

8260B Volatile Organic Compounds (GC/MS)-TCLP

Method: 8260B
Preparation: 5030B
Dilution: 1.0
Date Analyzed: 06/23/2009 1335
Date Prepared: 06/23/2009 1335
Date Leached: 06/22/2009 1032

Analysis Batch: 220-28395
Leachate Batch: 220-28315

Instrument ID: HP 6890/5973 GC/MS
Lab File ID: W6283.D
Initial Weight/Volume: 5 mL
Final Weight/Volume: 5 mL

Analyte	DryWt Corrected: N	Result (mg/L)	Qualifier	MDL	RL
Vinyl chloride		0.0050	U	0.00098	0.0050
1,1-Dichloroethene		0.0050	U	0.00083	0.0050
Methyl Ethyl Ketone		0.0085	J B	0.0011	0.010
Chloroform		0.0050	U	0.00067	0.0050
Carbon tetrachloride		0.0050	U	0.0011	0.0050
Benzene		0.0018	J	0.00074	0.0050
1,2-Dichloroethane		0.0050	U	0.00072	0.0050
Trichloroethene		0.0050	U	0.00062	0.0050
Tetrachloroethene		0.0050	U	0.00081	0.0050
Chlorobenzene		0.0050	U	0.00072	0.0050

Surrogate	%Rec	Acceptance Limits
1,2-Dichloroethane-d4 (Surr)	102	65 - 136
4-Bromofluorobenzene	108	51 - 142
Dibromofluoromethane	96	68 - 132
Toluene-d8 (Surr)	104	63 - 127

Client: STV Incorporated

Job Number: 220-9412-1
Sdg Number: 220-9412

Client Sample ID: **S-2**

Lab Sample ID: 220-9412-4
Client Matrix: Solid
% Moisture: 53.7
Date Sampled: 06/19/2009 1115
Date Received: 06/20/2009 0748

8260B Volatile Organic Compounds (GC/MS)

Method: 8260B
Preparation: 5030B
Dilution: 5.0
Date Analyzed: 06/22/2009 1705
Date Prepared: 06/22/2009 1705
Analysis Batch: 220-28348
Instrument ID: HP 5890/5971A GC/MS
Lab File ID: O1278.D
Initial Weight/Volume: 5 g
Final Weight/Volume: 5 mL

Analyte	DryWt Corrected: Y	Result (ug/Kg)	Qualifier	MDL	RL
Acetone		340	*	24	220
Benzene		10	J	6.2	54
Bromodichloromethane		54	U	3.2	54
Bromoform		54	U	6.6	54
Bromomethane		54	U	22	54
Methyl Ethyl Ketone		110	U	17	110
Carbon disulfide		20	J	4.4	54
Carbon tetrachloride		54	U	10	54
Chlorobenzene		54	U	6.4	54
Chloroethane		54	U	11	54
Chloroform		54	U	3.7	54
Chloromethane		54	U	8.4	54
Dibromochloromethane		54	U	3.8	54
1,1-Dichloroethane		54	U	3.2	54
1,2-Dichloroethane		54	U	6.3	54
1,1-Dichloroethene		54	U	6.3	54
1,2-Dichloropropane		54	U	7.2	54
cis-1,3-Dichloropropene		54	U	6.0	54
trans-1,3-Dichloropropene		54	U	2.9	54
Ethylbenzene		19	J	7.6	54
2-Hexanone		110	U	13	110
Methylene Chloride		98	J B	12	220
methyl isobutyl ketone		54	U	5.9	54
Styrene		54	U	1.6	54
1,1,2,2-Tetrachloroethane		54	U	5.6	54
Tetrachloroethene		54	U	8.7	54
Toluene		2.4	J B	0.80	54
1,1,1-Trichloroethane		54	U	5.7	54
1,1,2-Trichloroethane		54	U	4.0	54
Trichloroethene		54	U	8.7	54
Vinyl chloride		54	U	2.5	54
Xylenes, Total		90		5.2	54
cis-1,2-Dichloroethene		54	U	4.0	54
trans-1,2-Dichloroethene		54	U	4.2	54

Surrogate	%Rec	Acceptance Limits
1,2-Dichloroethane-d4 (Surr)	76	59 - 132
4-Bromofluorobenzene	91	34 - 124
Dibromofluoromethane	73	59 - 123
Toluene-d8 (Surr)	65	50 - 118

Client: STV Incorporated

Job Number: 220-9412-1
Sdg Number: 220-9412

Client Sample ID: **W-TANK**

Lab Sample ID: 220-9412-1
Client Matrix: Water

Date Sampled: 06/19/2009 1030
Date Received: 06/20/2009 0748

8270C Semivolatile Compounds by Gas Chromatography/Mass Spectrometry (GC/MS)

Method: 8270C
Preparation: 3510C
Dilution: 4.0
Date Analyzed: 06/22/2009 1226
Date Prepared: 06/20/2009 1317

Analysis Batch: 220-28334
Prep Batch: 220-28305

Instrument ID: HP 6890/5975
Lab File ID: A5735.D
Initial Weight/Volume: 960 mL
Final Weight/Volume: 1 mL
Injection Volume: 1.0 uL

Analyte	Result (ug/L)	Qualifier	MDL	RL
Acenaphthene	3.6	J	1.3	17
Acenaphthylene	2.2	J	1.4	17
Anthracene	5.4	J	1.2	17
Benzo[a]anthracene	8.6	J	1.2	17
Benzo[a]pyrene	5.3	J	1.5	17
Benzo[b]fluoranthene	4.4	J	1.5	17
Benzo[g,h,i]perylene	6.5	J	1.5	17
Benzo[k]fluoranthene	1.7	J	1.7	17
Bis(2-chloroethoxy)methane	17	U	1.3	17
Bis(2-chloroethyl)ether	17	U	1.2	17
Bis(2-ethylhexyl) phthalate	290		2.3	17
Butyl benzyl phthalate	17	U	1.5	17
Carbazole	17	U	1.4	17
Chrysene	8.3	J	1.0	17
Di-n-butyl phthalate	17	U	1.5	17
Di-n-octyl phthalate	17	U	1.6	17
4-Bromophenyl phenyl ether	17	U	1.8	17
4-Chloroaniline	17	U	1.2	17
2-Chloronaphthalene	17	U	1.6	17
4-Chlorophenyl phenyl ether	17	U	1.5	17
Dibenz(a,h)anthracene	3.1	J	1.6	17
Dibenzofuran	2.1	J	1.8	17
Diethyl phthalate	17	U	1.8	17
Dimethyl phthalate	17	U	1.6	17
1,2-Dichlorobenzene	17	U	1.3	17
1,3-Dichlorobenzene	17	U	1.0	17
1,4-Dichlorobenzene	17	U	1.3	17
3,3'-Dichlorobenzidine	17	U	1.5	17
2,4-Dinitrotoluene	17	U	1.7	17
2,6-Dinitrotoluene	17	U	1.1	17
Fluoranthene	17		1.3	17
Fluorene	3.5	J	1.1	17
Hexachlorobenzene	17	U	1.4	17
Hexachlorobutadiene	17	U	0.83	17
Hexachlorocyclopentadiene	17	U	1.5	17
Hexachloroethane	17	U	1.5	17
Indeno[1,2,3-cd]pyrene	4.0	J	1.2	17
Isophorone	17	U	1.3	17
2-Methylnaphthalene	2.5	J	1.1	17
Naphthalene	1.9	J	1.2	17
2-Nitroaniline	17	U	1.4	17
3-Nitroaniline	17	U	0.96	17
Nitrobenzene	17	U	1.2	17
N-Nitrosodi-n-propylamine	17	U	1.4	17

Client: STV Incorporated

Job Number: 220-9412-1
Sdg Number: 220-9412

Client Sample ID: **W-TANK**

Lab Sample ID: 220-9412-1
Client Matrix: Water

Date Sampled: 06/19/2009 1030
Date Received: 06/20/2009 0748

8270C Semivolatile Compounds by Gas Chromatography/Mass Spectrometry (GC/MS)

Method: 8270C
Preparation: 3510C
Dilution: 4.0
Date Analyzed: 06/22/2009 1226
Date Prepared: 06/20/2009 1317

Analysis Batch: 220-28334
Prep Batch: 220-28305

Instrument ID: HP 6890/5975
Lab File ID: A5735.D
Initial Weight/Volume: 960 mL
Final Weight/Volume: 1 mL
Injection Volume: 1.0 uL

Analyte	Result (ug/L)	Qualifier	MDL	RL
N-Nitrosodiphenylamine	17	U	1.4	17
Phenanthrene	13	J	1.2	17
Pyrene	19		1.4	17
1,2,4-Trichlorobenzene	17	U	1.5	17
4-Chloro-3-methylphenol	21	U	1.4	21
2-Chlorophenol	17	U	0.96	17
2-Methylphenol	17	U	1.0	17
4-Methylphenol	17	U	1.2	17
2,4-Dichlorophenol	17	U	1.4	17
2,4-Dimethylphenol	17	U	1.4	17
2,4-Dinitrophenol	100	U	1.8	100
4,6-Dinitro-2-methylphenol	100	U	7.8	100
2-Nitrophenol	17	U	1.1	17
4-Nitrophenol	42	U	6.0	42
Pentachlorophenol	100	U	1.3	100
Phenol	17	U	0.79	17
2,4,5-Trichlorophenol	42	U	1.2	42
2,4,6-Trichlorophenol	17	U	1.5	17
Benzyl alcohol	17	U	1.7	17
4-Nitroaniline	17	U	0.83	17
2,2'-oxybis[1-chloropropane]	17	U	1.0	17

Surrogate	%Rec	Acceptance Limits
2-Fluorobiphenyl	87	39 - 120
2-Fluorophenol	43	13 - 120
2,4,6-Tribromophenol	76	36 - 120
Nitrobenzene-d5	79	40 - 120
Phenol-d5	35	10 - 120
Terphenyl-d14	68	10 - 120

Client: STV Incorporated

Job Number: 220-9412-1
Sdg Number: 220-9412

Client Sample ID: **W-EXC**

Lab Sample ID: 220-9412-2
Client Matrix: Water

Date Sampled: 06/19/2009 1000
Date Received: 06/20/2009 0748

8270C Semivolatile Compounds by Gas Chromatography/Mass Spectrometry (GC/MS)

Method: 8270C
Preparation: 3510C
Dilution: 1.0
Date Analyzed: 06/22/2009 1107
Date Prepared: 06/20/2009 1317

Analysis Batch: 220-28334
Prep Batch: 220-28305

Instrument ID: HP 6890/5975
Lab File ID: A5732.D
Initial Weight/Volume: 970 mL
Final Weight/Volume: 1 mL
Injection Volume: 1.0 uL

Analyte	Result (ug/L)	Qualifier	MDL	RL
Acenaphthene	0.66	J	0.32	4.1
Acenaphthylene	4.1	U	0.35	4.1
Anthracene	0.56	J	0.30	4.1
Benzo[a]anthracene	0.74	J	0.31	4.1
Benzo[a]pyrene	0.60	J	0.36	4.1
Benzo[b]fluoranthene	0.52	J	0.37	4.1
Benzo[g,h,i]perylene	1.6	J	0.37	4.1
Benzo[k]fluoranthene	4.1	U	0.41	4.1
Bis(2-chloroethoxy)methane	4.1	U	0.32	4.1
Bis(2-chloroethyl)ether	4.1	U	0.30	4.1
Bis(2-ethylhexyl) phthalate	17		0.56	4.1
Butyl benzyl phthalate	4.1	U	0.36	4.1
Carbazole	4.1	U	0.34	4.1
Chrysene	0.66	J	0.26	4.1
Di-n-butyl phthalate	0.40	J	0.36	4.1
Di-n-octyl phthalate	4.1	U	0.39	4.1
4-Bromophenyl phenyl ether	4.1	U	0.45	4.1
4-Chloroaniline	4.1	U	0.30	4.1
2-Chloronaphthalene	4.1	U	0.40	4.1
4-Chlorophenyl phenyl ether	4.1	U	0.36	4.1
Dibenz(a,h)anthracene	4.1	U	0.39	4.1
Dibenzofuran	4.1	U	0.44	4.1
Diethyl phthalate	4.1	U	0.44	4.1
Dimethyl phthalate	4.1	U	0.39	4.1
1,2-Dichlorobenzene	4.1	U	0.32	4.1
1,3-Dichlorobenzene	4.1	U	0.26	4.1
1,4-Dichlorobenzene	4.1	U	0.32	4.1
3,3'-Dichlorobenzidine	4.1	U	0.37	4.1
2,4-Dinitrotoluene	4.1	U	0.41	4.1
2,6-Dinitrotoluene	4.1	U	0.27	4.1
Fluoranthene	1.7	J	0.32	4.1
Fluorene	0.57	J	0.27	4.1
Hexachlorobenzene	4.1	U	0.34	4.1
Hexachlorobutadiene	4.1	U	0.21	4.1
Hexachlorocyclopentadiene	4.1	U	0.36	4.1
Hexachloroethane	4.1	U	0.38	4.1
Indeno[1,2,3-cd]pyrene	0.92	J	0.29	4.1
Isophorone	4.1	U	0.32	4.1
2-Methylnaphthalene	4.1	U	0.28	4.1
Naphthalene	0.38	J	0.31	4.1
2-Nitroaniline	4.1	U	0.35	4.1
3-Nitroaniline	4.1	U	0.24	4.1
Nitrobenzene	4.1	U	0.29	4.1
N-Nitrosodi-n-propylamine	4.1	U	0.34	4.1

Client: STV Incorporated

Job Number: 220-9412-1
Sdg Number: 220-9412

Client Sample ID: **W-EXC**

Lab Sample ID: 220-9412-2
Client Matrix: Water

Date Sampled: 06/19/2009 1000
Date Received: 06/20/2009 0748

8270C Semivolatile Compounds by Gas Chromatography/Mass Spectrometry (GC/MS)

Method: 8270C
Preparation: 3510C
Dilution: 1.0
Date Analyzed: 06/22/2009 1107
Date Prepared: 06/20/2009 1317

Analysis Batch: 220-28334
Prep Batch: 220-28305

Instrument ID: HP 6890/5975
Lab File ID: A5732.D
Initial Weight/Volume: 970 mL
Final Weight/Volume: 1 mL
Injection Volume: 1.0 uL

Analyte	Result (ug/L)	Qualifier	MDL	RL
N-Nitrosodiphenylamine	4.1	U	0.34	4.1
Phenanthrene	1.4	J	0.29	4.1
Pyrene	2.2	J	0.34	4.1
1,2,4-Trichlorobenzene	4.1	U	0.37	4.1
4-Chloro-3-methylphenol	5.2	U	0.35	5.2
2-Chlorophenol	4.1	U	0.24	4.1
2-Methylphenol	4.1	U	0.25	4.1
4-Methylphenol	4.1	U	0.30	4.1
2,4-Dichlorophenol	4.1	U	0.34	4.1
2,4-Dimethylphenol	4.1	U	0.34	4.1
2,4-Dinitrophenol	26	U	0.44	26
4,6-Dinitro-2-methylphenol	26	U	1.9	26
2-Nitrophenol	4.1	U	0.28	4.1
4-Nitrophenol	10	U	1.5	10
Pentachlorophenol	26	U	0.32	26
Phenol	4.1	U	0.20	4.1
2,4,5-Trichlorophenol	10	U	0.29	10
2,4,6-Trichlorophenol	4.1	U	0.38	4.1
Benzyl alcohol	4.1	U	0.42	4.1
4-Nitroaniline	4.1	U	0.21	4.1
2,2'-oxybis[1-chloropropane]	4.1	U	0.26	4.1

Surrogate	%Rec	Acceptance Limits
2-Fluorobiphenyl	73	39 - 120
2-Fluorophenol	37	13 - 120
2,4,6-Tribromophenol	66	36 - 120
Nitrobenzene-d5	71	40 - 120
Phenol-d5	29	10 - 120
Terphenyl-d14	72	10 - 120

Client: STV Incorporated

Job Number: 220-9412-1
Sdg Number: 220-9412

Client Sample ID: **S-1**

Lab Sample ID: 220-9412-3
Client Matrix: Solid

Date Sampled: 06/19/2009 1045
Date Received: 06/20/2009 0748

8270C Semivolatile Compounds by Gas Chromatography/Mass Spectrometry (GC/MS)-TCLP

Method: 8270C
Preparation: 3510C
Dilution: 1.0
Date Analyzed: 06/24/2009 1523
Date Prepared: 06/24/2009 0907
Date Leached: 06/22/2009 1600

Analysis Batch: 220-28470
Prep Batch: 220-28419
Leachate Batch: 220-28369

Instrument ID: HP 6890/5975
Lab File ID: A5794.D
Initial Weight/Volume: 250 mL
Final Weight/Volume: 0.5 mL
Injection Volume: 1.0 uL

Analyte	DryWt Corrected: N	Result (mg/L)	Qualifier	MDL	RL
1,4-Dichlorobenzene		0.020	U	0.00062	0.020
2,4-Dinitrotoluene		0.020	U	0.00080	0.020
2,4,5-Trichlorophenol		0.10	U	0.00056	0.10
2,4,6-Trichlorophenol		0.020	U	0.00074	0.020
2-Methylphenol		0.020	U	0.00048	0.020
Hexachlorobenzene		0.020	U	0.00066	0.020
Hexachlorobutadiene		0.020	U	0.00040	0.020
Hexachloroethane		0.020	U	0.00074	0.020
Nitrobenzene		0.020	U	0.00056	0.020
Pentachlorophenol		0.10	U	0.00062	0.10
Pyridine		0.040	U	0.0077	0.040
4-Methylphenol		0.020	U	0.00058	0.020

Surrogate	%Rec	Acceptance Limits
2,4,6-Tribromophenol	86	29 - 126
2-Fluorobiphenyl	64	43 - 116
2-Fluorophenol	60	21 - 97
Nitrobenzene-d5	68	38 - 113
Terphenyl-d14	92	10 - 119
Phenol-d5	57	18 - 97

Client: STV Incorporated

Job Number: 220-9412-1
Sdg Number: 220-9412

Client Sample ID: S-1

Lab Sample ID: 220-9412-3
Client Matrix: Solid
% Moisture: 56.4

Date Sampled: 06/19/2009 1045
Date Received: 06/20/2009 0748

8270C Semivolatile Compounds by Gas Chromatography/Mass Spectrometry (GC/MS)

Method: 8270C
Preparation: 3541
Dilution: 20
Date Analyzed: 06/23/2009 1228
Date Prepared: 06/20/2009 1110

Analysis Batch: 220-28390
Prep Batch: 220-28293

Instrument ID: HP 6890/5973 GC/MS
Lab File ID: Z11432.D
Initial Weight/Volume: 15.19 g
Final Weight/Volume: 1 mL
Injection Volume: 1.0 uL

Analyte	DryWt Corrected: Y	Result (ug/Kg)	Qualifier	MDL	RL
Acenaphthene		2000	J	720	12000
Acenaphthylene		12000	U	600	12000
Anthracene		5000	J	480	12000
Benzo[a]anthracene		6200	J	430	12000
Benzo[a]pyrene		6400	J	330	12000
Benzo[b]fluoranthene		5000	J	330	12000
Benzo[g,h,i]perylene		11000	J	800	12000
Benzo[k]fluoranthene		1900	J	1100	12000
Bis(2-chloroethoxy)methane		12000	U	570	12000
Bis(2-chloroethyl)ether		12000	U	630	12000
Bis(2-ethylhexyl) phthalate		130000		1200	12000
Butyl benzyl phthalate		12000	U	680	12000
Carbazole		12000	U	680	12000
Chrysene		6900	J	900	12000
Di-n-butyl phthalate		12000	U	1800	12000
Di-n-octyl phthalate		12000	U	690	12000
4-Bromophenyl phenyl ether		12000	U	790	12000
4-Chloroaniline		12000	U	2000	12000
2-Chloronaphthalene		12000	U	520	12000
4-Chlorophenyl phenyl ether		12000	U	900	12000
Dibenz(a,h)anthracene		11000	J	960	12000
Dibenzofuran		1500	J	860	12000
Diethyl phthalate		12000	U	1200	12000
Dimethyl phthalate		12000	U	700	12000
1,2-Dichlorobenzene		12000	U	720	12000
1,3-Dichlorobenzene		12000	U	610	12000
1,4-Dichlorobenzene		12000	U	720	12000
3,3'-Dichlorobenzidine		30000	U	2500	30000
2,4-Dinitrotoluene		12000	U	970	12000
2,6-Dinitrotoluene		12000	U	360	12000
Fluoranthene		12000	J	610	12000
Fluorene		2800	J	730	12000
Hexachlorobenzene		12000	U	850	12000
Hexachlorobutadiene		12000	U	940	12000
Hexachlorocyclopentadiene		30000	U	5700	30000
Hexachloroethane		12000	U	700	12000
Indeno[1,2,3-cd]pyrene		14000		790	12000
Isophorone		12000	U	670	12000
2-Methylnaphthalene		6000	J	350	12000
Naphthalene		3300	J	630	12000
2-Nitroaniline		77000	U	740	77000
3-Nitroaniline		77000	U	390	77000
Nitrobenzene		12000	U	780	12000
N-Nitrosodi-n-propylamine		12000	U	820	12000

Client: STV Incorporated

Job Number: 220-9412-1
Sdg Number: 220-9412

Client Sample ID: **S-1**

Lab Sample ID: 220-9412-3
Client Matrix: Solid
% Moisture: 56.4
Date Sampled: 06/19/2009 1045
Date Received: 06/20/2009 0748

8270C Semivolatile Compounds by Gas Chromatography/Mass Spectrometry (GC/MS)

Method: 8270C
Preparation: 3541
Dilution: 20
Date Analyzed: 06/23/2009 1228
Date Prepared: 06/20/2009 1110
Analysis Batch: 220-28390
Prep Batch: 220-28293
Instrument ID: HP 6890/5973 GC/MS
Lab File ID: Z11432.D
Initial Weight/Volume: 15.19 g
Final Weight/Volume: 1 mL
Injection Volume: 1.0 uL

Analyte	DryWt Corrected: Y	Result (ug/Kg)	Qualifier	MDL	RL
N-Nitrosodiphenylamine		12000	U	690	12000
Phenanthrene		14000		600	12000
Pyrene		19000		570	12000
1,2,4-Trichlorobenzene		12000	U	800	12000
4-Chloro-3-methylphenol		12000	U	500	12000
2-Chlorophenol		12000	U	710	12000
2-Methylphenol		12000	U	730	12000
4-Methylphenol		12000	U	800	12000
2,4-Dichlorophenol		12000	U	650	12000
2,4-Dimethylphenol		12000	U	590	12000
2,4-Dinitrophenol		77000	U *	3700	77000
4,6-Dinitro-2-methylphenol		77000	U *	5200	77000
2-Nitrophenol		12000	U	770	12000
4-Nitrophenol		77000	U	920	77000
Pentachlorophenol		77000	U	7400	77000
Phenol		12000	U	810	12000
2,4,5-Trichlorophenol		77000	U	620	77000
2,4,6-Trichlorophenol		12000	U	330	12000
Benzyl alcohol		12000	U	1200	12000
4-Nitroaniline		12000	U	940	12000
2,2'-oxybis[1-chloropropane]		12000	U	630	12000

Surrogate	%Rec	Acceptance Limits
2-Fluorobiphenyl	92	41 - 120
2-Fluorophenol	80	34 - 120
2,4,6-Tribromophenol	94	37 - 120
Nitrobenzene-d5	93	38 - 120
Phenol-d5	95	36 - 120
Terphenyl-d14	87	32 - 125

Client: STV Incorporated

Job Number: 220-9412-1
Sdg Number: 220-9412

Client Sample ID: S-2

Lab Sample ID: 220-9412-4
Client Matrix: Solid

Date Sampled: 06/19/2009 1115
Date Received: 06/20/2009 0748

8270C Semivolatile Compounds by Gas Chromatography/Mass Spectrometry (GC/MS)-TCLP

Method: 8270C
Preparation: 3510C
Dilution: 1.0
Date Analyzed: 06/24/2009 1549
Date Prepared: 06/24/2009 0907
Date Leached: 06/22/2009 1600

Analysis Batch: 220-28470
Prep Batch: 220-28419
Leachate Batch: 220-28369

Instrument ID: HP 6890/5975
Lab File ID: A5795.D
Initial Weight/Volume: 250 mL
Final Weight/Volume: 0.5 mL
Injection Volume: 1.0 uL

Analyte	DryWt Corrected: N Result (mg/L)	Qualifier	MDL	RL
1,4-Dichlorobenzene	0.020	U	0.00062	0.020
2,4-Dinitrotoluene	0.020	U	0.00080	0.020
2,4,5-Trichlorophenol	0.10	U	0.00056	0.10
2,4,6-Trichlorophenol	0.020	U	0.00074	0.020
2-Methylphenol	0.020	U	0.00048	0.020
Hexachlorobenzene	0.020	U	0.00066	0.020
Hexachlorobutadiene	0.020	U	0.00040	0.020
Hexachloroethane	0.020	U	0.00074	0.020
Nitrobenzene	0.020	U	0.00056	0.020
Pentachlorophenol	0.10	U	0.00062	0.10
Pyridine	0.040	U	0.0077	0.040
4-Methylphenol	0.020	U	0.00058	0.020

Surrogate	%Rec	Acceptance Limits
2,4,6-Tribromophenol	85	29 - 126
2-Fluorobiphenyl	60	43 - 116
2-Fluorophenol	54	21 - 97
Nitrobenzene-d5	64	38 - 113
Terphenyl-d14	88	10 - 119
Phenol-d5	52	18 - 97

Client: STV Incorporated

Job Number: 220-9412-1
Sdg Number: 220-9412

Client Sample ID: S-2

Lab Sample ID: 220-9412-4
Client Matrix: Solid

% Moisture: 53.7

Date Sampled: 06/19/2009 1115
Date Received: 06/20/2009 0748

8270C Semivolatile Compounds by Gas Chromatography/Mass Spectrometry (GC/MS)

Method: 8270C
Preparation: 3541
Dilution: 20
Date Analyzed: 06/23/2009 1255
Date Prepared: 06/22/2009 1437

Analysis Batch: 220-28390
Prep Batch: 220-28343

Instrument ID: HP 6890/5973 GC/MS
Lab File ID: Z11433.D
Initial Weight/Volume: 15.18 g
Final Weight/Volume: 1 mL
Injection Volume: 1.0 uL

Analyte	DryWt Corrected: Y	Result (ug/Kg)	Qualifier	MDL	RL
Acenaphthene		2400	J	680	12000
Acenaphthylene		2100	J	560	12000
Anthracene		7500	J	450	12000
Benzo[a]anthracene		8900	J	410	12000
Benzo[a]pyrene		7200	J	310	12000
Benzo[b]fluoranthene		5300	J	310	12000
Benzo[g,h,i]perylene		11000	J	750	12000
Benzo[k]fluoranthene		1800	J	1000	12000
Bis(2-chloroethoxy)methane		12000	U	530	12000
Bis(2-chloroethyl)ether		12000	U	600	12000
Bis(2-ethylhexyl) phthalate		110000		1100	12000
Butyl benzyl phthalate		12000	U	640	12000
Carbazole		12000	U	640	12000
Chrysene		9200	J	850	12000
Di-n-butyl phthalate		12000	U	1700	12000
Di-n-octyl phthalate		12000	U	650	12000
4-Bromophenyl phenyl ether		12000	U	740	12000
4-Chloroaniline		12000	U	1900	12000
2-Chloronaphthalene		12000	U	490	12000
4-Chlorophenyl phenyl ether		12000	U	850	12000
Dibenz(a,h)anthracene		11000	J	910	12000
Dibenzofuran		1400	J	810	12000
Diethyl phthalate		12000	U	1200	12000
Dimethyl phthalate		12000	U	660	12000
1,2-Dichlorobenzene		12000	U	680	12000
1,3-Dichlorobenzene		12000	U	580	12000
1,4-Dichlorobenzene		12000	U	680	12000
3,3'-Dichlorobenzidine		29000	U	2400	29000
2,4-Dinitrotoluene		12000	U	920	12000
2,6-Dinitrotoluene		12000	U	340	12000
Fluoranthene		15000		570	12000
Fluorene		1700	J	690	12000
Hexachlorobenzene		12000	U	800	12000
Hexachlorobutadiene		12000	U	890	12000
Hexachlorocyclopentadiene		29000	U	5400	29000
Hexachloroethane		12000	U	660	12000
Indeno[1,2,3-cd]pyrene		14000		750	12000
Isophorone		12000	U	640	12000
2-Methylnaphthalene		2200	J	330	12000
Naphthalene		2900	J	600	12000
2-Nitroaniline		73000	U	700	73000
3-Nitroaniline		73000	U	370	73000
Nitrobenzene		12000	U	730	12000
N-Nitrosodi-n-propylamine		12000	U	780	12000

Client: STV Incorporated

Job Number: 220-9412-1
Sdg Number: 220-9412

Client Sample ID: S-2

Lab Sample ID: 220-9412-4
Client Matrix: Solid
% Moisture: 53.7
Date Sampled: 06/19/2009 1115
Date Received: 06/20/2009 0748

8270C Semivolatile Compounds by Gas Chromatography/Mass Spectrometry (GC/MS)

Method: 8270C
Preparation: 3541
Dilution: 20
Date Analyzed: 06/23/2009 1255
Date Prepared: 06/22/2009 1437
Analysis Batch: 220-28390
Prep Batch: 220-28343
Instrument ID: HP 6890/5973 GC/MS
Lab File ID: Z11433.D
Initial Weight/Volume: 15.18 g
Final Weight/Volume: 1 mL
Injection Volume: 1.0 uL

Analyte	DryWt Corrected: Y	Result (ug/Kg)	Qualifier	MDL	RL
N-Nitrosodiphenylamine		12000	U	650	12000
Phenanthrene		8700	J	570	12000
Pyrene		21000		540	12000
1,2,4-Trichlorobenzene		12000	U	760	12000
4-Chloro-3-methylphenol		12000	U	470	12000
2-Chlorophenol		12000	U	670	12000
2-Methylphenol		12000	U	690	12000
4-Methylphenol		12000	U	760	12000
2,4-Dichlorophenol		12000	U	610	12000
2,4-Dimethylphenol		12000	U	560	12000
2,4-Dinitrophenol		73000	U	3500	73000
4,6-Dinitro-2-methylphenol		73000	U	5000	73000
2-Nitrophenol		12000	U	730	12000
4-Nitrophenol		73000	U	870	73000
Pentachlorophenol		73000	U	7000	73000
Phenol		12000	U	760	12000
2,4,5-Trichlorophenol		73000	U	580	73000
2,4,6-Trichlorophenol		12000	U	320	12000
Benzyl alcohol		12000	U	1100	12000
4-Nitroaniline		12000	U	880	12000
2,2'-oxybis[1-chloropropane]		12000	U	600	12000

Surrogate	%Rec	Acceptance Limits
2-Fluorobiphenyl	75	41 - 120
2-Fluorophenol	73	34 - 120
2,4,6-Tribromophenol	83	37 - 120
Nitrobenzene-d5	67	38 - 120
Phenol-d5	74	36 - 120
Terphenyl-d14	68	32 - 125

Client: STV Incorporated

Job Number: 220-9412-1
Sdg Number: 220-9412

Client Sample ID: **W-TANK**

Lab Sample ID: 220-9412-1
Client Matrix: Water

Date Sampled: 06/19/2009 1030
Date Received: 06/20/2009 0748

8015B Gasoline Range Organics - (GC)

Method: 8015B
Preparation: 5030B
Dilution: 1.0
Date Analyzed: 06/25/2009 1843
Date Prepared: 06/25/2009 1843

Analysis Batch: 680-141418

Instrument ID: GC Volatiles - W FID1
Lab File ID: W062507.D
Initial Weight/Volume: 20 mL
Final Weight/Volume: 20 mL
Injection Volume:
Column ID: PRIMARY

Analyte	Result (mg/L)	Qualifier	MDL	RL
Gasoline Range Organics (GRO)-C6-C10	0.018	J	0.011	0.050

Surrogate	%Rec	Acceptance Limits
a,a,a-Trifluorotoluene	98	66 - 125

Client: STV Incorporated

Job Number: 220-9412-1
Sdg Number: 220-9412

Client Sample ID: **W-EXC**

Lab Sample ID: 220-9412-2
Client Matrix: Water

Date Sampled: 06/19/2009 1000
Date Received: 06/20/2009 0748

8015B Gasoline Range Organics - (GC)

Method: 8015B
Preparation: 5030B
Dilution: 1.0
Date Analyzed: 06/25/2009 1910
Date Prepared: 06/25/2009 1910

Analysis Batch: 680-141418

Instrument ID: GC Volatiles - W FID1
Lab File ID: W062508.D
Initial Weight/Volume: 20 mL
Final Weight/Volume: 20 mL
Injection Volume:
Column ID: PRIMARY

Analyte	Result (mg/L)	Qualifier	MDL	RL
Gasoline Range Organics (GRO)-C6-C10	0.050	U	0.011	0.050

Surrogate	%Rec	Acceptance Limits
a,a,a-Trifluorotoluene	100	66 - 125

Client: STV Incorporated

Job Number: 220-9412-1
Sdg Number: 220-9412

Client Sample ID: S-1

Lab Sample ID: 220-9412-3
Client Matrix: Solid

% Moisture: 56.4

Date Sampled: 06/19/2009 1045
Date Received: 06/20/2009 0748

8015B Gasoline Range Organics - (GC)

Method: 8015B
Preparation: 5030A
Dilution: 20
Date Analyzed: 06/25/2009 1314
Date Prepared: 06/25/2009 1314

Analysis Batch: 680-141384

Instrument ID: GC Volatiles - W FID1
Lab File ID: W062503.D
Initial Weight/Volume: 5 mL
Final Weight/Volume: 5 mL
Injection Volume:
Column ID: PRIMARY

Analyte	DryWt Corrected: Y	Result (mg/Kg)	Qualifier	MDL	RL
Gasoline Range Organics (GRO)-C6-C10		28		0.87	11

Surrogate	%Rec	Acceptance Limits
a,a,a-Trifluorotoluene	60	53 - 121

Client: STV Incorporated

Job Number: 220-9412-1
Sdg Number: 220-9412

Client Sample ID: **S-2**

Lab Sample ID: 220-9412-4
Client Matrix: Solid
% Moisture: 53.7
Date Sampled: 06/19/2009 1115
Date Received: 06/20/2009 0748

8015B Gasoline Range Organics - (GC)

Method: 8015B
Preparation: 5030A
Dilution: 20
Date Analyzed: 06/25/2009 1338
Date Prepared: 06/25/2009 1338
Analysis Batch: 680-141384
Instrument ID: GC Volatiles - W FID1
Lab File ID: W062504.D
Initial Weight/Volume: 5 mL
Final Weight/Volume: 5 mL
Injection Volume:
Column ID: PRIMARY

Analyte	DryWt Corrected: Y	Result (mg/Kg)	Qualifier	MDL	RL
Gasoline Range Organics (GRO)-C6-C10		50		0.82	11

Surrogate	%Rec	Acceptance Limits
a,a,a-Trifluorotoluene	66	53 - 121

Client: STV Incorporated

Job Number: 220-9412-1
Sdg Number: 220-9412

Client Sample ID: **W-TANK**

Lab Sample ID: 220-9412-1
Client Matrix: Water

Date Sampled: 06/19/2009 1030
Date Received: 06/20/2009 0748

8015B Diesel Range Organics (DRO) (GC)

Method: 8015B
Preparation: 3510C
Dilution: 10
Date Analyzed: 06/25/2009 0027
Date Prepared: 06/20/2009 1314

Analysis Batch: 220-28491
Prep Batch: 220-28304

Instrument ID: HP5890 with FID/NPD
Lab File ID: C2563013.d
Initial Weight/Volume: 1000 mL
Final Weight/Volume: 1 mL
Injection Volume: 1 uL
Column ID: PRIMARY

Analyte	Result (ug/L)	Qualifier	RL	RL
Diesel Range Organics [C10-C28]	11000		5000	5000

Surrogate	%Rec	Acceptance Limits
o-Terphenyl	91	24 - 132

Client: STV Incorporated

Job Number: 220-9412-1
Sdg Number: 220-9412

Client Sample ID: **W-TANK**

Lab Sample ID: 220-9412-1
Client Matrix: Water

Date Sampled: 06/19/2009 1030
Date Received: 06/20/2009 0748

8015B Hydrocarbon Product Identification (GC)

Method: 8015B
Preparation: 3510C
Dilution: 1.0
Date Analyzed: 06/22/2009 0517
Date Prepared: 06/20/2009 1314

Analysis Batch: 220-28034
Prep Batch: 220-28304

Instrument ID: HP5890 with FID/NPD
Lab File ID: C2561438.d
Initial Weight/Volume: 1000 mL
Final Weight/Volume: 1 mL
Injection Volume: 1 uL
Column ID: PRIMARY

Surrogate	%Rec	Acceptance Limits
o-Terphenyl	126	24 - 132

Client: STV Incorporated

Job Number: 220-9412-1
Sdg Number: 220-9412

Client Sample ID: **W-EXC**

Lab Sample ID: 220-9412-2
Client Matrix: Water

Date Sampled: 06/19/2009 1000
Date Received: 06/20/2009 0748

8015B Diesel Range Organics (DRO) (GC)

Method: 8015B
Preparation: 3510C
Dilution: 1.0
Date Analyzed: 06/25/2009 0054
Date Prepared: 06/20/2009 1314

Analysis Batch: 220-28491
Prep Batch: 220-28304

Instrument ID: HP5890 with FID/NPD
Lab File ID: C2563014.d
Initial Weight/Volume: 1000 mL
Final Weight/Volume: 1 mL
Injection Volume: 1 uL
Column ID: PRIMARY

Analyte	Result (ug/L)	Qualifier	RL	RL
Diesel Range Organics [C10-C28]	890		500	500

Surrogate	%Rec	Acceptance Limits
o-Terphenyl	57	24 - 132

Client: STV Incorporated

Job Number: 220-9412-1
Sdg Number: 220-9412

Client Sample ID: **W-EXC**

Lab Sample ID: 220-9412-2
Client Matrix: Water

Date Sampled: 06/19/2009 1000
Date Received: 06/20/2009 0748

8015B Hydrocarbon Product Identification (GC)

Method: 8015B
Preparation: 3510C
Dilution: 1.0
Date Analyzed: 06/22/2009 0544
Date Prepared: 06/20/2009 1314

Analysis Batch: 220-28034
Prep Batch: 220-28304

Instrument ID: HP5890 with FID/NPD
Lab File ID: C2561439.d
Initial Weight/Volume: 1000 mL
Final Weight/Volume: 1 mL
Injection Volume: 1 uL
Column ID: PRIMARY

Surrogate	%Rec	Acceptance Limits
o-Terphenyl	62	24 - 132

Client: STV Incorporated

Job Number: 220-9412-1
Sdg Number: 220-9412

Client Sample ID: **S-1**

Lab Sample ID: 220-9412-3
Client Matrix: Solid

% Moisture: 56.4

Date Sampled: 06/19/2009 1045
Date Received: 06/20/2009 0748

8015B Diesel Range Organics (DRO) (GC)

Method: 8015B
Preparation: 3550B
Dilution: 25
Date Analyzed: 06/25/2009 0121
Date Prepared: 06/20/2009 1131

Analysis Batch: 220-28491
Prep Batch: 220-28294

Instrument ID: HP5890 with FID/NPD
Lab File ID: C2563015.d
Initial Weight/Volume: 30.47 g
Final Weight/Volume: 1 mL
Injection Volume: 1 uL
Column ID: PRIMARY

Analyte	DryWt Corrected: Y	Result (ug/Kg)	Qualifier	RL	RL
Diesel Range Organics [C10-C28]		5100000		960000	960000

Surrogate	%Rec		Acceptance Limits
o-Terphenyl	0	*	28 - 146

Client: STV Incorporated

Job Number: 220-9412-1
Sdg Number: 220-9412

Client Sample ID: **S-2**

Lab Sample ID: 220-9412-4
Client Matrix: Solid
% Moisture: 53.7
Date Sampled: 06/19/2009 1115
Date Received: 06/20/2009 0748

8015B Diesel Range Organics (DRO) (GC)

Method: 8015B
Preparation: 3550B
Dilution: 100
Date Analyzed: 06/25/2009 0148
Date Prepared: 06/20/2009 1131
Analysis Batch: 220-28491
Prep Batch: 220-28294
Instrument ID: HP5890 with FID/NPD
Lab File ID: C2563016.d
Initial Weight/Volume: 30.53 g
Final Weight/Volume: 1 mL
Injection Volume: 1 uL
Column ID: PRIMARY

Analyte	DryWt Corrected: Y	Result (ug/Kg)	Qualifier	RL	RL
Diesel Range Organics [C10-C28]		7000000		3600000	3600000

Surrogate	%Rec		Acceptance Limits
o-Terphenyl	0	*	28 - 146

Client: STV Incorporated

Job Number: 220-9412-1
Sdg Number: 220-9412

Client Sample ID: **S-1**

Lab Sample ID: 220-9412-3
Client Matrix: Solid

Date Sampled: 06/19/2009 1045
Date Received: 06/20/2009 0748

8081A Organochlorine Pesticides (GC)-TCLP

Method: 8081A
Preparation: 3510C
Dilution: 1.0
Date Analyzed: 06/25/2009 0143
Date Prepared: 06/23/2009 1238
Date Leached: 06/22/2009 1600

Analysis Batch: 220-28488
Prep Batch: 220-28387
Leachate Batch: 220-28369

Instrument ID: HP 6890 dual ECD
Lab File ID: C8418025.D
Initial Weight/Volume: 200 mL
Final Weight/Volume: 10 mL
Injection Volume: 1.0 uL
Column ID: PRIMARY

Analyte	DryWt Corrected: N	Result (mg/L)	Qualifier	MDL	RL
Chlordane (technical)		0.0025	U	0.00021	0.0025
Endrin		0.00050	U	0.000068	0.00050
Heptachlor		0.00025	U	0.000030	0.00025
Heptachlor epoxide		0.00025	U	0.000028	0.00025
gamma-BHC (Lindane)		0.00025	U	0.000028	0.00025
Methoxychlor		0.0025	U *	0.00041	0.0025
Toxaphene		0.012	U	0.00020	0.012

Surrogate	%Rec	Acceptance Limits
DCB Decachlorobiphenyl	70	29 - 156
Tetrachloro-m-xylene	90	53 - 144

Method: 8081A
Preparation: 3510C
Dilution: 1.0
Date Analyzed: 06/25/2009 0143
Date Prepared: 06/23/2009 1238
Date Leached: 06/22/2009 1600

Analysis Batch: 220-28488
Prep Batch: 220-28387
Leachate Batch: 220-28369

Instrument ID: HP 6890 dual ECD
Lab File ID: D8418025.D
Initial Weight/Volume: 200 mL
Final Weight/Volume: 10 mL
Injection Volume: 1.0 uL
Column ID: SECONDARY

Surrogate	%Rec	Acceptance Limits
DCB Decachlorobiphenyl	67	29 - 156
Tetrachloro-m-xylene	86	53 - 144

Client: STV Incorporated

Job Number: 220-9412-1
Sdg Number: 220-9412

Client Sample ID: **S-1**

Lab Sample ID: 220-9412-3
Client Matrix: Solid
% Moisture: 56.4

Date Sampled: 06/19/2009 1045
Date Received: 06/20/2009 0748

8081A Organochlorine Pesticides (GC)

Method: 8081A
Preparation: 3550B
Dilution: 5.0
Date Analyzed: 06/23/2009 1625
Date Prepared: 06/20/2009 1207

Analysis Batch: 220-28430
Prep Batch: 220-28296

Instrument ID: HP 5890 with dual ECD
Lab File ID: D7733047.D
Initial Weight/Volume: 30.04 g
Final Weight/Volume: 10 mL
Injection Volume: 1.0 uL
Column ID: PRIMARY

Analyte	DryWt Corrected: Y Result (ug/Kg)	Qualifier	MDL	RL
4,4'-DDD	310		6.8	38
4,4'-DDE	130		7.7	38
4,4'-DDT	410	*	9.3	38
Aldrin	6.4	J	2.1	19
alpha-BHC	19	U	2.8	19
beta-BHC	18	J	4.3	19
delta-BHC	19	U	4.2	19
Dieldrin	180		6.5	38
Endosulfan I	19	U	3.3	19
Endosulfan II	38	U	7.1	38
Endosulfan sulfate	38	U	6.8	38
Endrin	270		7.1	38
Endrin ketone	76		6.9	38
gamma-BHC (Lindane)	19	U	3.3	19
Heptachlor	41		3.6	19
Heptachlor epoxide	27		3.4	19
Methoxychlor	96	J *	42	190
Toxaphene	950	U	100	950
alpha-Chlordane	61		3.1	19
gamma-Chlordane	94		6.1	19

Surrogate	%Rec		Acceptance Limits
DCB Decachlorobiphenyl	399	*	25 - 159
Tetrachloro-m-xylene	111		24 - 154

Method: 8081A
Preparation: 3550B
Dilution: 5.0
Date Analyzed: 06/23/2009 1625
Date Prepared: 06/20/2009 1207

Analysis Batch: 220-28430
Prep Batch: 220-28296

Instrument ID: HP 5890 with dual ECD
Lab File ID: C7733047.D
Initial Weight/Volume: 30.04 g
Final Weight/Volume: 10 mL
Injection Volume: 1.0 uL
Column ID: SECONDARY

Surrogate	%Rec		Acceptance Limits
DCB Decachlorobiphenyl	379	*	25 - 159
Tetrachloro-m-xylene	108		24 - 154

Client: STV Incorporated

Job Number: 220-9412-1
Sdg Number: 220-9412

Client Sample ID: **S-1**

Lab Sample ID: 220-9412-3
Client Matrix: Solid

% Moisture: 56.4

Date Sampled: 06/19/2009 1045
Date Received: 06/20/2009 0748

8081A Organochlorine Pesticides (GC)

Method: 8081A
Preparation: 3550B
Dilution: 5.0
Date Analyzed: 06/23/2009 2024
Date Prepared: 06/20/2009 1207

Analysis Batch: 220-28430
Prep Batch: 220-28296

Instrument ID: HP 5890 with dual ECD
Lab File ID: D7733056.D
Initial Weight/Volume: 30.04 g
Final Weight/Volume: 10 mL
Injection Volume: 1.0 uL
Column ID: PRIMARY

Analyte	DryWt Corrected: Y	Result (ug/Kg)	Qualifier	MDL	RL
Endrin aldehyde		75		4.7	38

Client: STV Incorporated

Job Number: 220-9412-1
Sdg Number: 220-9412

Client Sample ID: **S-1**

Lab Sample ID: 220-9412-3
Client Matrix: Solid

% Moisture: 56.4

Date Sampled: 06/19/2009 1045
Date Received: 06/20/2009 0748

8081A Organochlorine Pesticides (GC)

Method: 8081A
Preparation: 3550B
Dilution: 5.0
Date Analyzed: 06/23/2009 2024
Date Prepared: 06/20/2009 1207

Analysis Batch: 220-28430
Prep Batch: 220-28296

Instrument ID: HP 5890 with dual ECD
Lab File ID: C7733056.D
Initial Weight/Volume: 30.04 g
Final Weight/Volume: 10 mL
Injection Volume: 1.0 uL
Column ID: SECONDARY

Surrogate	%Rec		Acceptance Limits
DCB Decachlorobiphenyl	280	*	25 - 159
DCB Decachlorobiphenyl	473	*	25 - 159
Tetrachloro-m-xylene	135		24 - 154
Tetrachloro-m-xylene	613	*	24 - 154

Client: STV Incorporated

Job Number: 220-9412-1
Sdg Number: 220-9412

Client Sample ID: **S-2**

Lab Sample ID: 220-9412-4
Client Matrix: Solid

Date Sampled: 06/19/2009 1115
Date Received: 06/20/2009 0748

8081A Organochlorine Pesticides (GC)-TCLP

Method: 8081A
Preparation: 3510C
Dilution: 1.0
Date Analyzed: 06/25/2009 0208
Date Prepared: 06/23/2009 1238
Date Leached: 06/22/2009 1600

Analysis Batch: 220-28488
Prep Batch: 220-28387
Leachate Batch: 220-28369

Instrument ID: HP 6890 dual ECD
Lab File ID: C8418026.D
Initial Weight/Volume: 200 mL
Final Weight/Volume: 10 mL
Injection Volume: 1.0 uL
Column ID: PRIMARY

Analyte	DryWt Corrected: N	Result (mg/L)	Qualifier	MDL	RL
Chlordane (technical)		0.0025	U	0.00021	0.0025
Endrin		0.00050	U	0.000068	0.00050
Heptachlor		0.000042	J	0.000030	0.00025
Heptachlor epoxide		0.00025	U	0.000028	0.00025
gamma-BHC (Lindane)		0.00025	U	0.000028	0.00025
Methoxychlor		0.0025	U *	0.00041	0.0025
Toxaphene		0.012	U	0.00020	0.012

Surrogate	%Rec	Acceptance Limits
DCB Decachlorobiphenyl	60	29 - 156
Tetrachloro-m-xylene	88	53 - 144

Method: 8081A
Preparation: 3510C
Dilution: 1.0
Date Analyzed: 06/25/2009 0208
Date Prepared: 06/23/2009 1238
Date Leached: 06/22/2009 1600

Analysis Batch: 220-28488
Prep Batch: 220-28387
Leachate Batch: 220-28369

Instrument ID: HP 6890 dual ECD
Lab File ID: D8418026.D
Initial Weight/Volume: 200 mL
Final Weight/Volume: 10 mL
Injection Volume: 1.0 uL
Column ID: SECONDARY

Surrogate	%Rec	Acceptance Limits
DCB Decachlorobiphenyl	59	29 - 156
Tetrachloro-m-xylene	82	53 - 144

Client: STV Incorporated

Job Number: 220-9412-1
Sdg Number: 220-9412

Client Sample ID: **S-2**

Lab Sample ID: 220-9412-4
Client Matrix: Solid

% Moisture: 53.7

Date Sampled: 06/19/2009 1115
Date Received: 06/20/2009 0748

8081A Organochlorine Pesticides (GC)

Method: 8081A
Preparation: 3550B
Dilution: 2.0
Date Analyzed: 06/23/2009 2004
Date Prepared: 06/20/2009 1207

Analysis Batch: 220-28430
Prep Batch: 220-28296

Instrument ID: HP 5890 with dual ECD
Lab File ID: C7733055.D
Initial Weight/Volume: 30.29 g
Final Weight/Volume: 10 mL
Injection Volume: 1.0 uL
Column ID: PRIMARY

Analyte	DryWt Corrected: Y Result (ug/Kg)	Qualifier	MDL	RL
4,4'-DDD	120		2.5	14
4,4'-DDE	66		2.9	14
4,4'-DDT	260	*	3.5	14
Aldrin	7.3	U	0.77	7.3
alpha-BHC	3.0	J	1.0	7.3
beta-BHC	8.3		1.6	7.3
delta-BHC	7.3	U	1.6	7.3
Dieldrin	74		2.4	14
Endosulfan I	7.3	U	1.2	7.3
Endosulfan II	14	U	2.7	14
Endosulfan sulfate	14	U	2.5	14
Endrin	200		2.6	14
Endrin ketone	43		2.6	14
gamma-BHC (Lindane)	7.3	U	1.2	7.3
Heptachlor	26		1.4	7.3
Heptachlor epoxide	11		1.3	7.3
Methoxychlor	61	J *	16	73
Toxaphene	360	U	39	360
alpha-Chlordane	31		1.2	7.3
gamma-Chlordane	32		2.3	7.3

Surrogate	%Rec	Acceptance Limits
DCB Decachlorobiphenyl	107	25 - 159
Tetrachloro-m-xylene	26	24 - 154

Method: 8081A
Preparation: 3550B
Dilution: 2.0
Date Analyzed: 06/23/2009 2004
Date Prepared: 06/20/2009 1207

Analysis Batch: 220-28430
Prep Batch: 220-28296

Instrument ID: HP 5890 with dual ECD
Lab File ID: D7733055.D
Initial Weight/Volume: 30.29 g
Final Weight/Volume: 10 mL
Injection Volume: 1.0 uL
Column ID: SECONDARY

Surrogate	%Rec		Acceptance Limits
DCB Decachlorobiphenyl	82		25 - 159
Tetrachloro-m-xylene	23	*	24 - 154

Client: STV Incorporated

Job Number: 220-9412-1
Sdg Number: 220-9412

Client Sample ID: **S-2**

Lab Sample ID: 220-9412-4
Client Matrix: Solid

% Moisture: 53.7

Date Sampled: 06/19/2009 1115
Date Received: 06/20/2009 0748

8081A Organochlorine Pesticides (GC)

Method: 8081A
Preparation: 3550B
Dilution: 2.0
Date Analyzed: 06/23/2009 2044
Date Prepared: 06/20/2009 1207

Analysis Batch: 220-28430
Prep Batch: 220-28296

Instrument ID: HP 5890 with dual ECD
Lab File ID: D7733057.D
Initial Weight/Volume: 30.29 g
Final Weight/Volume: 10 mL
Injection Volume: 1.0 uL
Column ID: PRIMARY

Analyte	DryWt Corrected: Y	Result (ug/Kg)	Qualifier	MDL	RL
Endrin aldehyde		46		1.7	14

Client: STV Incorporated

Job Number: 220-9412-1
Sdg Number: 220-9412

Client Sample ID: **S-2**

Lab Sample ID: 220-9412-4
Client Matrix: Solid

% Moisture: 53.7

Date Sampled: 06/19/2009 1115
Date Received: 06/20/2009 0748

8081A Organochlorine Pesticides (GC)

Method: 8081A
Preparation: 3550B
Dilution: 2.0
Date Analyzed: 06/23/2009 2044
Date Prepared: 06/20/2009 1207

Analysis Batch: 220-28430
Prep Batch: 220-28296

Instrument ID: HP 5890 with dual ECD
Lab File ID: C7733057.D
Initial Weight/Volume: 30.29 g
Final Weight/Volume: 10 mL
Injection Volume: 1.0 uL
Column ID: SECONDARY

Surrogate	%Rec		Acceptance Limits
DCB Decachlorobiphenyl	101		25 - 159
DCB Decachlorobiphenyl	162	*	25 - 159
Tetrachloro-m-xylene	20	*	24 - 154
Tetrachloro-m-xylene	191	*	24 - 154

Client: STV Incorporated

Job Number: 220-9412-1
Sdg Number: 220-9412

Client Sample ID: **W-TANK**

Lab Sample ID: 220-9412-1
Client Matrix: Water

Date Sampled: 06/19/2009 1030
Date Received: 06/20/2009 0748

8082 Polychlorinated Biphenyls (PCBs) by Gas Chromatography

Method: 8082
Preparation: 3510C
Dilution: 1.0
Date Analyzed: 06/22/2009 1027
Date Prepared: 06/20/2009 1308

Analysis Batch: 220-28368
Prep Batch: 220-28303

Instrument ID: HP 6890 dual ECD
Lab File ID: C9043990.D
Initial Weight/Volume: 1000 mL
Final Weight/Volume: 10 mL
Injection Volume: 1.0 uL
Column ID: PRIMARY

Analyte	Result (ug/L)	Qualifier	MDL	RL
PCB-1016	0.50	U	0.050	0.50
PCB-1221	0.50	U	0.050	0.50
PCB-1232	0.50	U	0.050	0.50
PCB-1242	1.6		0.050	0.50
PCB-1248	0.50	U	0.050	0.50
PCB-1254	2.3		0.082	0.50
PCB-1260	2.2		0.082	0.50

Surrogate	%Rec		Acceptance Limits
Tetrachloro-m-xylene	29		22 - 145
DCB Decachlorobiphenyl	26	*	29 - 135

Method: 8082
Preparation: 3510C
Dilution: 1.0
Date Analyzed: 06/22/2009 1027
Date Prepared: 06/20/2009 1308

Analysis Batch: 220-28368
Prep Batch: 220-28303

Instrument ID: HP 6890 dual ECD
Lab File ID: D9043990.D
Initial Weight/Volume: 1000 mL
Final Weight/Volume: 10 mL
Injection Volume: 1.0 uL
Column ID: SECONDARY

Surrogate	%Rec		Acceptance Limits
Tetrachloro-m-xylene	28		22 - 145
DCB Decachlorobiphenyl	24	*	29 - 135

Client: STV Incorporated

Job Number: 220-9412-1
Sdg Number: 220-9412

Client Sample ID: **W-EXC**

Lab Sample ID: 220-9412-2
Client Matrix: Water

Date Sampled: 06/19/2009 1000
Date Received: 06/20/2009 0748

8082 Polychlorinated Biphenyls (PCBs) by Gas Chromatography

Method: 8082
Preparation: 3510C
Dilution: 1.0
Date Analyzed: 06/22/2009 1046
Date Prepared: 06/20/2009 1308

Analysis Batch: 220-28368
Prep Batch: 220-28303

Instrument ID: HP 6890 dual ECD
Lab File ID: D9043991.D
Initial Weight/Volume: 1000 mL
Final Weight/Volume: 10 mL
Injection Volume: 1.0 uL
Column ID: PRIMARY

Analyte	Result (ug/L)	Qualifier	MDL	RL
PCB-1016	0.50	U	0.050	0.50
PCB-1221	0.50	U	0.050	0.50
PCB-1232	0.50	U	0.050	0.50
PCB-1242	0.50	U	0.050	0.50
PCB-1248	0.50	U	0.050	0.50
PCB-1254	0.50	U	0.082	0.50
PCB-1260	0.50	U	0.082	0.50

Surrogate	%Rec		Acceptance Limits
Tetrachloro-m-xylene	65		22 - 145
DCB Decachlorobiphenyl	27	*	29 - 135

Client: STV Incorporated

Job Number: 220-9412-1
Sdg Number: 220-9412

Client Sample ID: **S-1**

Lab Sample ID: 220-9412-3
Client Matrix: Solid

% Moisture: 56.4

Date Sampled: 06/19/2009 1045
Date Received: 06/20/2009 0748

8082 Polychlorinated Biphenyls (PCBs) by Gas Chromatography

Method: 8082
Preparation: 3550B
Dilution: 2.0
Date Analyzed: 06/23/2009 1241
Date Prepared: 06/22/2009 1349

Analysis Batch: 220-28393
Prep Batch: 220-28341

Instrument ID: HP 6890 dual ECD
Lab File ID: C90431051.D
Initial Weight/Volume: 30.40 g
Final Weight/Volume: 10 mL
Injection Volume: 1.0 uL
Column ID: PRIMARY

Analyte	DryWt Corrected: Y Result (ug/Kg)	Qualifier	MDL	RL
PCB-1016	77	U	6.0	77
PCB-1221	77	U	6.0	77
PCB-1232	77	U	6.0	77
PCB-1242	590		6.0	77
PCB-1248	77	U	6.0	77
PCB-1254	520		6.5	77
PCB-1260	760		6.5	77

Surrogate	%Rec	Acceptance Limits
Tetrachloro-m-xylene	24	24 - 150
DCB Decachlorobiphenyl	84	24 - 150

Method: 8082
Preparation: 3550B
Dilution: 2.0
Date Analyzed: 06/23/2009 1241
Date Prepared: 06/22/2009 1349

Analysis Batch: 220-28393
Prep Batch: 220-28341

Instrument ID: HP 6890 dual ECD
Lab File ID: D90431051.D
Initial Weight/Volume: 30.40 g
Final Weight/Volume: 10 mL
Injection Volume: 1.0 uL
Column ID: SECONDARY

Surrogate	%Rec	Acceptance Limits
Tetrachloro-m-xylene	23	24 - 150
DCB Decachlorobiphenyl	77	24 - 150

Client: STV Incorporated

Job Number: 220-9412-1
Sdg Number: 220-9412

Client Sample ID: S-2

Lab Sample ID: 220-9412-4
Client Matrix: Solid

% Moisture: 53.7

Date Sampled: 06/19/2009 1115
Date Received: 06/20/2009 0748

8082 Polychlorinated Biphenyls (PCBs) by Gas Chromatography

Method: 8082
Preparation: 3550B
Dilution: 5.0
Date Analyzed: 06/23/2009 1222
Date Prepared: 06/22/2009 1349

Analysis Batch: 220-28393
Prep Batch: 220-28341

Instrument ID: HP 6890 dual ECD
Lab File ID: C90431050.D
Initial Weight/Volume: 30.20 g
Final Weight/Volume: 10 mL
Injection Volume: 1.0 uL
Column ID: PRIMARY

Analyte	DryWt Corrected: Y Result (ug/Kg)	Qualifier	MDL	RL
PCB-1016	180	U	14	180
PCB-1221	180	U	14	180
PCB-1232	180	U	14	180
PCB-1242	720		14	180
PCB-1248	180	U	14	180
PCB-1254	1100		15	180
PCB-1260	890		15	180

Surrogate	%Rec		Acceptance Limits
Tetrachloro-m-xylene	90		24 - 150
DCB Decachlorobiphenyl	190	*	24 - 150

Method: 8082
Preparation: 3550B
Dilution: 5.0
Date Analyzed: 06/23/2009 1222
Date Prepared: 06/22/2009 1349

Analysis Batch: 220-28393
Prep Batch: 220-28341

Instrument ID: HP 6890 dual ECD
Lab File ID: C90431050.D
Initial Weight/Volume: 30.20 g
Final Weight/Volume: 10 mL
Injection Volume: 1.0 uL
Column ID: SECONDARY

Surrogate	%Rec		Acceptance Limits
Tetrachloro-m-xylene	85		24 - 150
DCB Decachlorobiphenyl	188	*	24 - 150

Client: STV Incorporated

Job Number: 220-9412-1
Sdg Number: 220-9412

Client Sample ID: S-1

Lab Sample ID: 220-9412-3
Client Matrix: Solid

Date Sampled: 06/19/2009 1045
Date Received: 06/20/2009 0748

8151A Herbicides (GC)-TCLP

Method: 8151A
Preparation: 8151A
Dilution: 1.0
Date Analyzed: 06/26/2009 1622
Date Prepared: 06/24/2009 1009
Date Leached: 06/23/2009 1520

Analysis Batch: 680-141545
Prep Batch: 680-141206
Leachate Batch: 680-141157

Instrument ID: GC SemiVolatiles - S
Lab File ID: sf26008.d
Initial Weight/Volume: 10 mL
Final Weight/Volume: 10 mL
Injection Volume: 1 uL
Column ID: PRIMARY

Analyte	DryWt Corrected: N	Result (mg/L)	Qualifier	MDL	RL
2,4-D		0.050	U	0.050	0.050
Silvex (2,4,5-TP)		0.050	U	0.050	0.050

Surrogate	%Rec	Acceptance Limits
DCAA	104	50 - 150

Client: STV Incorporated

Job Number: 220-9412-1
Sdg Number: 220-9412

Client Sample ID: **S-1**

Lab Sample ID: 220-9412-3
Client Matrix: Solid
% Moisture: 56.4
Date Sampled: 06/19/2009 1045
Date Received: 06/20/2009 0748

8151A Herbicides (GC)

Method: 8151A
Preparation: 8151A
Dilution: 20
Date Analyzed: 06/26/2009 2121
Date Prepared: 06/23/2009 1302
Analysis Batch: 680-141545
Prep Batch: 680-141123
Instrument ID: GC SemiVolatiles - S
Lab File ID: sf26024.d
Initial Weight/Volume: 30.2 g
Final Weight/Volume: 10 mL
Injection Volume: 1 uL
Column ID: PRIMARY

Analyte	DryWt Corrected: Y	Result (ug/Kg)	Qualifier	MDL	RL
2,4-D		380	U	230	380
2,4-DB		380	U	140	380
2,4,5-T		380	U	100	380
Silvex (2,4,5-TP)		380	U	73	380
Dalapon		15000	U	130	15000
Dicamba		380	U	86	380
Dichlorprop		380	U	50	380
Dinoseb		4600	U	210	4600
MCPA		91000	U *	8600	91000
Mecoprop		91000	U	7700	91000
Pentachlorophenol		380	U	19	380

Surrogate	%Rec		Acceptance Limits
DCAA	0	D	58 - 110

Client: STV Incorporated

Job Number: 220-9412-1
Sdg Number: 220-9412

Client Sample ID: **S-2**

Lab Sample ID: 220-9412-4
Client Matrix: Solid

Date Sampled: 06/19/2009 1115
Date Received: 06/20/2009 0748

8151A Herbicides (GC)-TCLP

Method: 8151A
Preparation: 8151A
Dilution: 1.0
Date Analyzed: 06/26/2009 1641
Date Prepared: 06/24/2009 1009
Date Leached: 06/23/2009 1520

Analysis Batch: 680-141545
Prep Batch: 680-141206
Leachate Batch: 680-141157

Instrument ID: GC SemiVolatiles - S
Lab File ID: sf26009.d
Initial Weight/Volume: 10 mL
Final Weight/Volume: 10 mL
Injection Volume: 1 uL
Column ID: PRIMARY

Analyte	DryWt Corrected: N	Result (mg/L)	Qualifier	MDL	RL
2,4-D		0.050	U	0.050	0.050
Silvex (2,4,5-TP)		0.050	U	0.050	0.050

Surrogate	%Rec	Acceptance Limits
DCAA	96	50 - 150

Client: STV Incorporated

Job Number: 220-9412-1
Sdg Number: 220-9412

Client Sample ID: **S-2**

Lab Sample ID: 220-9412-4
Client Matrix: Solid
% Moisture: 53.7
Date Sampled: 06/19/2009 1115
Date Received: 06/20/2009 0748

8151A Herbicides (GC)

Method: 8151A
Preparation: 8151A
Dilution: 1.0
Date Analyzed: 06/26/2009 1834
Date Prepared: 06/23/2009 1302
Analysis Batch: 680-141545
Prep Batch: 680-141123
Instrument ID: GC SemiVolatiles - S
Lab File ID: sf26015.d
Initial Weight/Volume: 30.2 g
Final Weight/Volume: 10 mL
Injection Volume: 1 uL
Column ID: PRIMARY

Analyte	DryWt Corrected: Y	Result (ug/Kg)	Qualifier	MDL	RL
2,4-D		18	U	11	18
2,4-DB		18	U	6.4	18
2,4,5-T		18	U	4.9	18
Silvex (2,4,5-TP)		18	U	3.4	18
Dalapon		710	U	6.2	710
Dicamba		18	U	4.1	18
Dichlorprop		18	U	2.4	18
Dinoseb		210	U	9.9	210
MCPA		4300	U *	410	4300
Mecoprop		4300	U	360	4300
Pentachlorophenol		18	U	0.90	18

Surrogate	%Rec		Acceptance Limits
DCAA	1240	E *	58 - 110

Client: STV Incorporated

Job Number: 220-9412-1
Sdg Number: 220-9412

Client Sample ID: **W-TANK**

Lab Sample ID: 220-9412-1
Client Matrix: Water

Date Sampled: 06/19/2009 1030
Date Received: 06/20/2009 0748

6020 Metals (ICP/MS)

Method: 6020
Preparation: 3010A
Dilution: 5.0
Date Analyzed: 06/24/2009 1248
Date Prepared: 06/23/2009 1156

Analysis Batch: 220-28480
Prep Batch: 220-28380

Instrument ID: Agilent ICPMS
Lab File ID: N/A
Initial Weight/Volume: 100 mL
Final Weight/Volume: 500 mL

Analyte	Result (ug/L)	Qualifier	MDL	RL
Silver	12.5	U	2.5	12.5
Arsenic	25.8		2.5	12.5
Beryllium	12.5	U	2.5	12.5
Cadmium	13.1		2.5	12.5
Chromium	101		5.0	25.0
Copper	290		2.5	25.0
Nickel	126		2.5	12.5
Lead	280		2.5	12.5
Antimony	16.2	J	5.0	20.0
Selenium	25.0	U	5.0	25.0
Thallium	17.5	U	5.0	17.5
Zinc	506		12.5	125

7470A Mercury (CVAA)

Method: 7470A
Preparation: 7470A
Dilution: 1.0
Date Analyzed: 06/23/2009 1451
Date Prepared: 06/23/2009 1121

Analysis Batch: 220-28406
Prep Batch: 220-28377

Instrument ID: Perkin Elmer FIMS
Lab File ID: N/A
Initial Weight/Volume: 25 mL
Final Weight/Volume: 50 mL

Analyte	Result (ug/L)	Qualifier	MDL	RL
Mercury	0.44		0.060	0.20

Client: STV Incorporated

Job Number: 220-9412-1
Sdg Number: 220-9412

Client Sample ID: **W-EXC**

Lab Sample ID: 220-9412-2
Client Matrix: Water

Date Sampled: 06/19/2009 1000
Date Received: 06/20/2009 0748

6020 Metals (ICP/MS)

Method: 6020
Preparation: 3010A
Dilution: 5.0
Date Analyzed: 06/24/2009 1252
Date Prepared: 06/23/2009 1156

Analysis Batch: 220-28480
Prep Batch: 220-28380

Instrument ID: Agilent ICPMS
Lab File ID: N/A
Initial Weight/Volume: 100 mL
Final Weight/Volume: 500 mL

Analyte	Result (ug/L)	Qualifier	MDL	RL
Silver	12.5	U	2.5	12.5
Arsenic	7.3	J	2.5	12.5
Beryllium	12.5	U	2.5	12.5
Cadmium	12.5	U	2.5	12.5
Chromium	18.4	J	5.0	25.0
Copper	54.8		2.5	25.0
Nickel	30.0		2.5	12.5
Lead	47.0		2.5	12.5
Antimony	20.0	U	5.0	20.0
Selenium	25.0	U	5.0	25.0
Thallium	17.5	U	5.0	17.5
Zinc	103	J	12.5	125

7470A Mercury (CVAA)

Method: 7470A
Preparation: 7470A
Dilution: 1.0
Date Analyzed: 06/23/2009 1452
Date Prepared: 06/23/2009 1121

Analysis Batch: 220-28406
Prep Batch: 220-28377

Instrument ID: Perkin Elmer FIMS
Lab File ID: N/A
Initial Weight/Volume: 25 mL
Final Weight/Volume: 50 mL

Analyte	Result (ug/L)	Qualifier	MDL	RL
Mercury	0.20	U	0.060	0.20

Client: STV Incorporated

Job Number: 220-9412-1
Sdg Number: 220-9412

Client Sample ID: **S-1**

Lab Sample ID: 220-9412-3
Client Matrix: Solid

Date Sampled: 06/19/2009 1045
Date Received: 06/20/2009 0748

6010B Metals (ICP)-TCLP

Method:	6010B	Analysis Batch: 220-28513		Instrument ID:	Perkin Elmer ICP
Preparation:	3010A	Prep Batch: 220-28372		Lab File ID:	N/A
Dilution:	1.0	Leachate Batch: 220-28369		Initial Weight/Volume:	20 mL
Date Analyzed:	06/25/2009 1438			Final Weight/Volume:	50 mL
Date Prepared:	06/23/2009 1038				
Date Leached:	06/22/2009 1600				

Analyte	DryWt Corrected: N	Result (mg/L)	Qualifier	MDL	RL
Arsenic		0.064	J	0.020	0.075
Barium		0.33		0.0012	0.025
Cadmium		0.025	U	0.0050	0.025
Chromium		0.023	J	0.0025	0.025
Lead		0.075	U	0.012	0.075
Selenium		0.19	U	0.062	0.19
Silver		0.025	U	0.0012	0.025

6020 Metals (ICP/MS)

Method:	6020	Analysis Batch: 220-28480		Instrument ID:	Agilent ICPMS
Preparation:	3050B	Prep Batch: 220-28339		Lab File ID:	N/A
Dilution:	1.0			Initial Weight/Volume:	1.15 g
Date Analyzed:	06/24/2009 1331			Final Weight/Volume:	1000 mL
Date Prepared:	06/22/2009 1337				

Analyte	DryWt Corrected: Y	Result (mg/Kg)	Qualifier	MDL	RL
Silver		11.2		0.20	1.0
Arsenic		45.6		0.20	1.0
Beryllium		0.70	J	0.30	1.0
Cadmium		51.6		0.20	1.0
Chromium		342		0.40	2.0
Copper		974		0.20	2.0
Nickel		392		0.20	1.0
Lead		607		0.20	1.0
Antimony		8.5		0.40	1.6
Selenium		8.8		0.60	2.0
Thallium		0.56	J	0.40	1.4
Zinc		1350		1.0	10

Client: STV Incorporated

Job Number: 220-9412-1
Sdg Number: 220-9412

Client Sample ID: **S-1**

Lab Sample ID: 220-9412-3
Client Matrix: Solid

Date Sampled: 06/19/2009 1045
Date Received: 06/20/2009 0748

7470A Mercury (CVAA)-TCLP

Method:	7470A	Analysis Batch: 220-28406		Instrument ID:	Perkin Elmer FIMS
Preparation:	7470A	Prep Batch: 220-28377		Lab File ID:	N/A
Dilution:	1.0	Leachate Batch: 220-28369		Initial Weight/Volume:	5 mL
Date Analyzed:	06/23/2009 1515			Final Weight/Volume:	50 mL
Date Prepared:	06/23/2009 1121				
Date Leached:	06/22/2009 1600				

Analyte	DryWt Corrected: N	Result (mg/L)	Qualifier	MDL	RL
Mercury		0.0020	U	0.0010	0.0020

7471A Mercury (CVAA)

Method:	7471A	Analysis Batch: 220-28474		Instrument ID:	Perkin Elmer FIMS
Preparation:	7471A	Prep Batch: 220-28373		Lab File ID:	N/A
Dilution:	5.0			Initial Weight/Volume:	0.62 g
Date Analyzed:	06/24/2009 1546			Final Weight/Volume:	50 mL
Date Prepared:	06/23/2009 1058				

Analyte	DryWt Corrected: Y	Result (mg/Kg)	Qualifier	MDL	RL
Mercury		2.4		0.044	0.55

Client: STV Incorporated

Job Number: 220-9412-1
Sdg Number: 220-9412

Client Sample ID: **S-2**

Lab Sample ID: 220-9412-4
Client Matrix: Solid

Date Sampled: 06/19/2009 1115
Date Received: 06/20/2009 0748

6010B Metals (ICP)-TCLP

Method: 6010B
Preparation: 3010A
Dilution: 1.0
Date Analyzed: 06/25/2009 1441
Date Prepared: 06/23/2009 1038
Date Leached: 06/22/2009 1600

Analysis Batch: 220-28513
Prep Batch: 220-28372
Leachate Batch: 220-28369

Instrument ID: Perkin Elmer ICP
Lab File ID: N/A
Initial Weight/Volume: 20 mL
Final Weight/Volume: 50 mL

Analyte	DryWt Corrected: N	Result (mg/L)	Qualifier	MDL	RL
Arsenic		0.075	U	0.020	0.075
Barium		0.34		0.0012	0.025
Cadmium		0.025	U	0.0050	0.025
Chromium		0.038		0.0025	0.025
Lead		0.075	U	0.012	0.075
Selenium		0.19	U	0.062	0.19
Silver		0.025	U	0.0012	0.025

6020 Metals (ICP/MS)

Method: 6020
Preparation: 3050B
Dilution: 1.0
Date Analyzed: 06/24/2009 1348
Date Prepared: 06/22/2009 1337

Analysis Batch: 220-28480
Prep Batch: 220-28339

Instrument ID: Agilent ICPMS
Lab File ID: N/A
Initial Weight/Volume: 1.45 g
Final Weight/Volume: 1000 mL

Analyte	DryWt Corrected: Y	Result (mg/Kg)	Qualifier	MDL	RL
Silver		19.5		0.15	0.74
Arsenic		34.0		0.15	0.74
Beryllium		0.80		0.22	0.74
Cadmium		104		0.15	0.74
Chromium		530		0.30	1.5
Copper		1450		0.15	1.5
Nickel		337		0.15	0.74
Lead		1370		0.15	0.74
Antimony		7.3		0.30	1.2
Selenium		5.0		0.45	1.5
Thallium		0.31	J	0.30	1.0
Zinc		2240		0.74	7.4

Client: STV Incorporated

Job Number: 220-9412-1
Sdg Number: 220-9412

Client Sample ID: **S-2**

Lab Sample ID: 220-9412-4
Client Matrix: Solid

Date Sampled: 06/19/2009 1115
Date Received: 06/20/2009 0748

7470A Mercury (CVAA)-TCLP

Method: 7470A
Preparation: 7470A
Dilution: 1.0
Date Analyzed: 06/23/2009 1516
Date Prepared: 06/23/2009 1121
Date Leached: 06/22/2009 1600

Analysis Batch: 220-28406
Prep Batch: 220-28377
Leachate Batch: 220-28369

Instrument ID: Perkin Elmer FIMS
Lab File ID: N/A
Initial Weight/Volume: 5 mL
Final Weight/Volume: 50 mL

Analyte	DryWt Corrected: N	Result (mg/L)	Qualifier	MDL	RL
Mercury		0.0020	U	0.0010	0.0020

7471A Mercury (CVAA)

Method: 7471A
Preparation: 7471A
Dilution: 5.0
Date Analyzed: 06/24/2009 1547
Date Prepared: 06/23/2009 1058

Analysis Batch: 220-28474
Prep Batch: 220-28373

Instrument ID: Perkin Elmer FIMS
Lab File ID: N/A
Initial Weight/Volume: 0.60 g
Final Weight/Volume: 50 mL

Analyte	DryWt Corrected: Y	Result (mg/Kg)	Qualifier	MDL	RL
Mercury		2.6		0.043	0.54

General Chemistry

Client Sample ID: S-1

Lab Sample ID: 220-9412-3
Client Matrix: Solid

% Moisture: 56.4

Date Sampled: 06/19/2009 1045
Date Received: 06/20/2009 0748

Analyte	Result	Qual	Units	MDL	RL	Dil	Method
Chromium, hexavalent	2.2	U	mg/Kg	0.24	2.2	1.0	7196A
	Anly Batch: 680-141487	Date Analyzed		06/26/2009 1319		DryWt Corrected: Y	
	Prep Batch: 680-141389	Date Prepared:		06/25/2009 1528			

Analyte	Result	Qual	Units	RL	RL	Dil	Method
Ignitability	neg		mm/sec	2.2	2.2	1.0	1030
	Anly Batch: 220-28346	Date Analyzed		06/22/2009 1446		DryWt Corrected: N	
Temperature	1890		Fahrenheit	1.00	1.00	1.0	1030
	Anly Batch: 220-28346	Date Analyzed		06/22/2009 1446		DryWt Corrected: N	
Cyanide, Reactive	0.50	U	mg/Kg	0.50	0.50	1.0	9012
	Anly Batch: 220-28401	Date Analyzed		06/23/2009 1344		DryWt Corrected: N	
	Prep Batch: 220-28376	Date Prepared:		06/22/2009 1425			
Sulfide, Reactive	372		mg/Kg	20.0	20.0	1.0	9034
	Anly Batch: 220-28438	Date Analyzed		06/24/2009 1042		DryWt Corrected: N	
	Prep Batch: 220-28436	Date Prepared:		06/22/2009 1505			
pH	8.52	HF	SU	0.100	0.100	1.0	9045C
	Anly Batch: 220-28443	Date Analyzed		06/24/2009 1213		DryWt Corrected: N	
Percent Moisture	56.4		%	0.10	0.10	1.0	Moisture
	Anly Batch: 220-28326	Date Analyzed		06/22/2009 1138			
Percent Solids	43.6		%	0.10	0.10	1.0	Moisture
	Anly Batch: 220-28326	Date Analyzed		06/22/2009 1138			

General Chemistry

Client Sample ID: S-2

Lab Sample ID: 220-9412-4
Client Matrix: Solid

% Moisture: 53.7

Date Sampled: 06/19/2009 1115
Date Received: 06/20/2009 0748

Analyte	Result	Qual	Units	MDL	RL	Dil	Method
Chromium, hexavalent	2.1	U	mg/Kg	0.23	2.1	1.0	7196A
	Anly Batch: 680-141487	Date Analyzed		06/26/2009 1319		DryWt Corrected: Y	
	Prep Batch: 680-141389	Date Prepared:		06/25/2009 1528			

Analyte	Result	Qual	Units	RL	RL	Dil	Method
Ignitability	neg		mm/sec	2.2	2.2	1.0	1030
	Anly Batch: 220-28346	Date Analyzed		06/22/2009 1448		DryWt Corrected: N	
Temperature	1890		Fahrenheit	1.00	1.00	1.0	1030
	Anly Batch: 220-28346	Date Analyzed		06/22/2009 1448		DryWt Corrected: N	
Cyanide, Reactive	0.50	U	mg/Kg	0.50	0.50	1.0	9012
	Anly Batch: 220-28401	Date Analyzed		06/23/2009 1345		DryWt Corrected: N	
	Prep Batch: 220-28376	Date Prepared:		06/22/2009 1425			
Sulfide, Reactive	644		mg/Kg	19.9	19.9	1.0	9034
	Anly Batch: 220-28438	Date Analyzed		06/24/2009 1051		DryWt Corrected: N	
	Prep Batch: 220-28436	Date Prepared:		06/22/2009 1505			
pH	8.34	HF	SU	0.100	0.100	1.0	9045C
	Anly Batch: 220-28443	Date Analyzed		06/24/2009 1219		DryWt Corrected: N	
Percent Moisture	53.7		%	0.10	0.10	1.0	Moisture
	Anly Batch: 220-28326	Date Analyzed		06/22/2009 1138			
Percent Solids	46.3		%	0.10	0.10	1.0	Moisture
	Anly Batch: 220-28326	Date Analyzed		06/22/2009 1138			

DATA REPORTING QUALIFIERS

Client: STV Incorporated

Job Number: 220-9412-1
Sdg Number: 220-9412

Lab Section	Qualifier	Description
GC/MS VOA		
	U	Analyzed for but not detected.
	J	Indicates an estimated value.
	*	LCS or LCSD exceeds the control limits
	*	Surrogate exceeds the control limit
	B	The analyte was found in an associated blank, as well as in the sample.
GC/MS Semi VOA		
	U	Analyzed for but not detected.
	J	Indicates an estimated value.
	*	LCS or LCSD exceeds the control limits
GC VOA		
	U	Analyzed for but not detected.
	J	Indicates an estimated value.
GC Semi VOA		
	U	Analyzed for but not detected.
	E	Compound concentration exceeds the upper level of the calibration range of the instrument for that specific analysis.
	*	Duplicate RPD exceeds control limits
	J	Indicates an estimated value.
	*	LCS or LCSD exceeds the control limits
	*	MS or MSD exceeds the control limits
	*	Surrogate exceeds the control limit
	D	The reported value is from a dilution.

DATA REPORTING QUALIFIERS

Client: STV Incorporated

Job Number: 220-9412-1
Sdg Number: 220-9412

Lab Section	Qualifier	Description
Metals		
	U	Indicates analyzed for but not detected.
	4	MS, MSD: The analyte present in the original sample is 4 times greater than the matrix spike concentration; therefore, control limits are not applicable.
	J	Sample result is greater than the MDL but below the CRDL
	N	Spiked sample recovery is not within control limits.
General Chemistry		
	HF	Field parameter with a holding time of 15 minutes
	U	Indicates analyzed for but not detected.

Chain of Custody Record

SEVERN TRENT **STL**
Severn Trent Laboratories, Inc.

9412

STL-4124 (0901)

Client: STV Inc	Project Manager: Mike Tumalty	Date: 6/19/09	Chain of Custody Number: 351398
Address: 225 Park Ave South	Telephone Number (Area Code)/Fax Number: (212) 614-3369	Lab Number: per B.C. 6/22 JMD	Page 1 of 1
City: New York; State: NY; Zip Code: 10003	Site Contact: Brian Connolly; Lab Contact: Jill		
Project Name and Location (State): Borden Ave Bridge, New York	Carrier/Waybill Number:		
Contract/Purchase Order/Quote No.			

Analysis (Attach list if more space is needed)

Sample I.D. No. and Description (Containers for each sample may be combined on one line)	Date	Time	Matrix: Air	Aqueous	Sed.	Soil	Containers & Preservatives: Unpres.	H2SO4	HNO3	HCl	NaOH	ZnAc/NaOH	TCL VOCs	TCL SVOCs	PCBs	Pest/Herb.	PPL METALS	CR (VI)	TCLP	TPHC = DRO/GRO Fingerprint TPHC	Fingerprint TPHC	DRO/GRO	RCRA char	per B.C.	Special Instructions/ Conditions of Receipt
	6/19/09																								
1 W-TANK		1030											X	X	X		X			X					All Containers in 7.8°C cooler
2 W-EXC		1000											X	X	X		X			X					All Containers in 7.8°C cooler
3 S-1		1045											X	X	X	X	X	X	X	X	X	X	X		KB 6/20/09
4 S-2		1115											X	X	X	X	X	X	X	X	X	X	X		

Possible Hazard Identification: ☑ Non-Hazard ☐ Flammable ☐ Skin Irritant ☐ Poison B ☐ Unknown

Sample Disposal: ☐ Return To Client ☐ Disposal By Lab ☐ Archive For _____ Months (A fee may be assessed if samples are retained longer than 1 month)

Turn Around Time Required: ☑ 24 Hours ☐ 48 Hours ☐ 7 Days ☐ 14 Days ☐ 21 Days ☐ Other _____

QC Requirements (Specify): Samples collected by Richard Hart (516) 328-1194 if question

	Date	Time		Date	Time
1. Relinquished By: [signature]	6/19/09	3:05	1. Received By: [signature]	6/19/09	3:05
2. Relinquished By:			2. Received By: [signature]	6/20/09	748
3. Relinquished By:			3. Received By:		

Comments: 0.6°C, 7.8°C gun #1 bags of melted ice.

PASSED RAD SCREEN

DISTRIBUTION: WHITE - Returned to Client with Report; CANARY - Stays with the Sample; PINK - Field Copy

06/29/2009

ESTAMERICA CONNECTICUT
RESERVATIVE RECORD

Job Number:

Client:

Client Project:

Lab Number	Preservative	pH	Adjustment (mLs)	pH after Adjustment	Preservative Lot Number	Initials	Date
9412- 01	HNO3	<2	N/A	N/A	N/A	KB	6/20/09
02	↓	<2	↓	↓	↓	↓	↓
01	HCL	<2					
02	↓	<2					

TestAmerica - Connecticut
Internal Chain-of-Custody

220-9412
STV- Borden Ave Bridge

24 hr TAT

Trip Blank:

QC: Air:

FB:

Soil: 3-4 Water: 1-2

Date Received: 6/20/09

Sample #s: 1-4

Locations: 99D, R-1U, A5, R-22

Laboratory Sample #	Signature-Sample Removal	Date	Time	Reason	Signature-Sample Return	Date	Time
1-4		6/20/09	1105	Ext.	Used		
3-4		6/20/09	1105	Ext.	1710	6/20/09	1710
3-4		6/20/09	1030	VOA TRIP		6/20/09	1700
3-4	MC	6/22	12:20	MTL		6/22/09	1430
1,2		6/22	13:30	VOA			
3,4		6-22	13:50	EXT		6/22	15:10
3-4		6-22	1515	MTL		6-22	1610
3-4		6-23	1025	MTL		6-23	1300
1-2	MC	6/23	10:55	MTL	MC	6/23	13:45
1,2		6/24/09	10:40	pH		6/24/09	12:30

Login Sample Receipt Check List

Client: STV Incorporated

Job Number: 220-9412-1
SDG Number: 220-9412

Login Number: 9412
Creator: Blocker, Kristina
List Number: 1

List Source: TestAmerica Connecticut

Question	T / F/ NA	Comment
Radioactivity either was not measured or, if measured, is at or below background	True	
The cooler's custody seal, if present, is intact.	True	
The cooler or samples do not appear to have been compromised or tampered with.	True	
Samples were received on ice.	True	7.8C cooler bags of melted ice/water.
Cooler Temperature is acceptable.	False	
Cooler Temperature is recorded.	True	0.6C, 7.8C
COC is present.	True	
COC is filled out in ink and legible.	True	
COC is filled out with all pertinent information.	True	
There are no discrepancies between the sample IDs on the containers and the COC.	True	
Samples are received within Holding Time.	True	
Sample containers have legible labels.	True	
Containers are not broken or leaking.	True	
Sample collection date/times are provided.	True	
Appropriate sample containers are used.	True	
Sample bottles are completely filled.	True	
There is sufficient vol. for all requested analyses, incl. any requested MS/MSDs	True	
VOA sample vials do not have headspace or bubble is <6mm (1/4") in diameter.	True	
If necessary, staff have been informed of any short hold time or quick TAT needs	True	
Multiphasic samples are not present.	True	
Samples do not require splitting or compositing.	True	
Is the Field Sampler's name present on COC?	True	

Login Sample Receipt Check List

Client: STV Incorporated

Job Number: 220-9412-1
SDG Number: 220-9412

Login Number: 9412
Creator: Daughtry, Beth
List Number: 1

List Source: TestAmerica Savannah
List Creation: 06/23/09 10:36 AM

Question	T / F/ NA	Comment
Radioactivity either was not measured or, if measured, is at or below background	N/A	
The cooler's custody seal, if present, is intact.	True	
The cooler or samples do not appear to have been compromised or tampered with.	True	
Samples were received on ice.	True	
Cooler Temperature is acceptable.	True	
Cooler Temperature is recorded.	True	
COC is present.	True	
COC is filled out in ink and legible.	True	
COC is filled out with all pertinent information.	True	
There are no discrepancies between the sample IDs on the containers and the COC.	True	
Samples are received within Holding Time.	True	
Sample containers have legible labels.	True	
Containers are not broken or leaking.	True	
Sample collection date/times are provided.	True	
Appropriate sample containers are used.	True	
Sample bottles are completely filled.	True	
There is sufficient vol. for all requested analyses, incl. any requested MS/MSDs	True	
VOA sample vials do not have headspace or bubble is <6mm (1/4") in diameter.	True	
If necessary, staff have been informed of any short hold time or quick TAT needs	True	
Multiphasic samples are not present.	N/A	
Samples do not require splitting or compositing.	N/A	
Is the Field Sampler's name present on COC?	N/A	

APPENDIX C - YORK ANALYTICAL DATA REPORT

YORK
ANALYTICAL LABORATORIES, INC.

Technical Report

prepared for:

Moretrench American Corporation
51 Smart Ave
Yonkers, NY 10704
Attention: Joe Mahon

Report Date: 6/25/2009
Re: Client Project ID: Borden Avenue Bridge, Queens, NY
York Project No.: 09060867

CT License No. PH-0723 New York License No. 10854 New Jersey License No. CT-005 PA Reg. 68-04440

120 RESEARCH DRIVE STRATFORD, CT 06615 (203) 325-1371 FAX (203) 357-0166

Report Date: 6/25/2009
Client Project ID: Borden Avenue Bridge, Queens, NY
York Project No.: 09060867

Moretrench American Corporation
51 Smart Ave
Yonkers, NY 10704
Attention: Joe Mahon

Purpose and Results

This report contains the analytical data for the sample(s) identified on the attached chain-of-custody received in our laboratory on 06/22/09. The project was identified as your project "Borden Avenue Bridge, Queens, NY".

The analysis was conducted utilizing appropriate EPA, Standard Methods, and ASTM methods as detailed in the data summary tables.

All samples were received in proper condition meeting the NELAC acceptance requirements for environmental samples except those indicated under the Notes section of this report.

All the analyses met the method and laboratory standard operating procedure requirements except as indicated under the Notes section of this report, or as indicated by any data flags, the meaning of which is explained in the attachment to this report, if applicable.

The results of the analyses, which are all reported on an as-received basis unless otherwise noted, are summarized in the following table(s).

Analysis Results

Client Sample ID			Excavation within project site				
Collection Date			06/19/09				
York Sample ID			09060867-01				
Matrix			WATER				
Parameter	Method	Units	Results	MDL	Analysis Date	Analysis Time	Analyst
Volatiles, 601/602+MTBE+ Xylenes	EPA 601/602	ug/L	---	---	06/23/09	14:31	SS
1,1,1-Trichloroethane			Not detected	5.0	06/23/09	14:31	SS
1,1,2,2-Tetrachloroethane			Not detected	5.0	06/23/09	14:31	SS
1,1,2-Trichloroethane			Not detected	5.0	06/23/09	14:31	SS
1,1-Dichloroethane			Not detected	5.0	06/23/09	14:31	SS
1,1-Dichloroethylene			Not detected	5.0	06/23/09	14:31	SS

YORK

Client Sample ID			Excavation within project site				
Collection Date			06/19/09				
York Sample ID			09060867-01				
Matrix			WATER				
Parameter	Method	Units	Results	MDL	Analysis Date	Analysis Time	Analyst
Volatiles; 601/602+MTBE+ Xylenes	EPA 601/602	ug/L	---	---	06/23/09	14:31	SS
1,2-Dichlorobenzene			Not detected	5.0	06/23/09	14:31	SS
1,2-Dichloroethane			Not detected	5.0	06/23/09	14:31	SS
1,2-Dichloroethylene			Not detected	5.0	06/23/09	14:31	SS
1,2-Dichloropropane			Not detected	5.0	06/23/09	14:31	SS
1,3-Dichlorobenzene			Not detected	5.0	06/23/09	14:31	SS
1,4-Dichlorobenzene			Not detected	5.0	06/23/09	14:31	SS
2-Chloroethylvinyl ether			Not detected	5.0	06/23/09	14:31	SS
Benzene			Not detected	5.0	06/23/09	14:31	SS
Bromodichloromethane			Not detected	5.0	06/23/09	14:31	SS
Bromoform			Not detected	5.0	06/23/09	14:31	SS
Bromomethane			Not detected	5.0	06/23/09	14:31	SS
Carbon tetrachloride			Not detected	5.0	06/23/09	14:31	SS
Chlorobenzene			Not detected	5.0	06/23/09	14:31	SS
Chloroethane			Not detected	5.0	06/23/09	14:31	SS
Chloroform			Not detected	5.0	06/23/09	14:31	SS
Chloromethane			Not detected	5.0	06/23/09	14:31	SS
cis-1,3-Dichloropropylene			Not detected	5.0	06/23/09	14:31	SS
Dibromodichloromethane			Not detected	5.0	06/23/09	14:31	SS
Dichlorodifluoromethane			Not detected	5.0	06/23/09	14:31	SS
Ethylbenzene			Not detected	5.0	06/23/09	14:31	SS
m- & p-Xylenes			Not detected	5.0	06/23/09	14:31	SS
Methyl tert butyl ether (MTBE)			Not detected	5.0	06/23/09	14:31	SS
Methylene chloride			Not detected	5.0	06/23/09	14:31	SS
o-Xylene			Not detected	5.0	06/23/09	14:31	SS
Tetrachloroethylene			Not detected	5.0	06/23/09	14:31	SS
Toluene			Not detected	5.0	06/23/09	14:31	SS
trans-1,3-Dichloropropylene			Not detected	5.0	06/23/09	14:31	SS
Trichloroethylene			Not detected	5.0	06/23/09	14:31	SS
Trichlorofluoromethane			Not detected	5.0	06/23/09	14:31	SS
Vinyl chloride			Not detected	5.0	06/23/09	14:31	SS
Metals, Priority Pollutant List	EPA 200.7	mg/L	---	---	06/25/09	14:43	MW
Antimony			0.020	0.006	06/25/09	14:43	MW
Arsenic			0.025	0.004	06/25/09	14:43	MW
Beryllium			Not detected	0.0001	06/25/09	14:43	MW
Cadmium			0.008	0.003	06/25/09	14:43	MW
Chromium			0.049	0.005	06/25/09	14:43	MW
Copper			0.224	0.005	06/25/09	14:43	MW

YORK

Client Sample ID			Excavation within project site				
Collection Date			06/19/09				
York Sample ID			09060867-01				
Matrix			WATER				
Parameter	**Method**	**Units**	**Results**	**MDL**	**Analysis Date**	**Analysis Time**	**Analyst**
Metals, Priority Pollutant List	EPA 200.7	mg/L	---	---	06/25/09	14:43	MW
Lead			0.150	0.003	06/25/09	14:43	MW
Nickel			0.135	0.005	06/25/09	14:43	MW
Selenium			Not detected	0.005	06/25/09	14:43	MW
Silver			Not detected	0.005	06/25/09	14:43	MW
Thallium			Not detected	0.005	06/25/09	14:43	MW
Zinc			0.410	0.005	06/25/09	14:43	MW
Nitrite + Nitrate Nitrogen	SW846-9065/E300m	mg/L	0.08	0.01	06/25/09	14:22	TD
pH	SM 4500-H+ B	units	7.65	---	06/25/09	14:22	TD
Total Settleable Solids	EPA 160.5	ml/l	0.40	0.1	06/25/09	14:22	TD

Units Key: For Waters/Liquids: mg/L = ppm ; ug/L = ppb For Soils/Solids: mg/kg = ppm ; ug/kg = ppb

Notes for York Project No. 09060867

1. The MDL (Minimum Detectable Limit) reported is adjusted for any dilution necessary due to the levels of target and/or non-target analytes and matrix interference. This MDL is the REPORTING LIMIT and is based upon the lowest standard utilized for calibration where applicable.
2. Samples are retained for a period of thirty days after submittal of report, unless other arrangements are made.
3. York's liability for the above data is limited to the dollar value paid to York for the referenced project.
4. This report shall not be reproduced without the written approval of York Analytical Laboratories, Inc.
5. All samples were received in proper condition for analysis with proper documentation.
6. All analyses conducted met method or Laboratory SOP requirements.
7. It is noted that no analyses reported herein were subcontracted to another laboratory.

Approved By: Robert Q. Bradley
Managing Director

Date: 6/25/2009

YORK

YORK
ANALYTICAL LABORATORIES, INC.
120 RESEARCH DRIVE STRATFORD, CT 06615
(203) 325-1371 FAX (203) 357-0166

Field Chain-of-Custody Record

Page ___ of ___

09060867
09060772

Company Name	Report To:	Invoice To:	Project ID/No.	
Moretrench American Corp.	Joe Mahon		Borden Avenue Bridge Queens, NY	Joseph Mahon Samples Collected By (Signature) Joseph Mahon Name (Printed)

Sample No.	Location/ID	Date Sampled	Sample Matrix: Water	Soil	Air	OTHER	ANALYSES REQUESTED	Container Description(s)
	Excavation within project site.	6/19/09	✓				DEC List	(2) 40ml HCL (1) H_2SO_4 Liter (1) HNO_3 Plastic (1) Unp. Liter Amber

Chain-of-Custody Record

Bottles Relinquished from Lab by	Date/Time	Sample Relinquished by	Date/Time	Sample Received by	Date/Time
		Joseph Mahon		H.B. Horton	6-22-09 9:53AM
Bottles Received in Field by	**Date/Time**	**Sample Relinquished by**	**Date/Time**	**Sample Received in LAB by**	**Date/Time**
				[signature]	6-22-09 16303.9°C

Comments/Special Instructions

Turn-Around Time

___ Standard X RUSH(define) 2 days

APPENDIX D – WATER TREATMENT PLAN

MORETRENCH
....since 1931

SUBMITTAL

MORETRENCH
...since 1931

Borden Avenue Bridge

26 Borden Avenue
Queens, NY

WATER TREATMENT PLAN

July 23, 2009

Presented to:

Maracap Construction Industries Inc.
11018 15th Avenue
College Point, NY 11356

MORETRENCH
....since 1931

Borden Avenue Bridge

26 Borden Avenue
Queens, NY

WATER TREATMENT PLAN

Submitted to: Maracap Construction Industries Inc.

Prepared by

Moretrench American Corporation
51 Smart Avenue, Yonkers NY 10704

The submitted plan is based upon sound engineering principles and accepted industry practices and is reasonable for the described application. Responsibility for the design and installation of all structural elements contained herein, including but not limited to sheeting, underpinning, wood lagging, soldier beams and pilings is by others. Proper operation and supervision of the attached plan and construction of same are the responsibility of others as specified here-in.

MORETRENCH
....since 1931

Table of Contents

System Overview	4
Water Treatment System	5
Operating and Monitoring	8

Appendices

Appendix A	Treatment System Layout
Appendix B	Material & Equipment Specifications
Appendix C	System overview

July 23, 2009

MORETRENCH AMERICAN CORPORATION
51 Smart Avenue – Yonkers, NY 10704
(914) 423-1331

System Overview

As a result of the petroleum-impacted sediment encountered during emergency bridge repair work at Borden Avenue Bridge in Queens, NY, Moretrench, under subcontract to Maracap, amended its Dewatering Plan dated July 20, 2009 to include a Water Treatment System described herein. The amended plan addresses the treatment of impacted water from within the cofferdam and run off from the wet sediment stockpiles. The groundwater table will be lowered and withdrawn from the cofferdam through a series of permitted wells from within the confines of the cofferdam and treated on site through a designed water treatment system prior to discharge to the Dutch Kills. A SPDES Permit Equivalent Application is attached to the Corrective Action Plan (CAP) submitted by STV Incorporated on behalf of the New York City Department of Transportation. Please see the Corrective Action Plan for additional details on the project.

The existing sidewalk is approximately at El+19'. The water table is tidal and varies from El+0' to El-4'. All elevations are referenced to the Borough President of Manhattan Datum, which is 2.75' above Mean Sea Level at Sandy Hook, NJ.

Areas that will require dewatering are as follows:

- The bottom of existing abutment to be removed along west side of the embankment which extends to approximately El-18' with a length of approximately 70'.
- The bottom of existing wing walls to be removed on both ends extending to El-4'.
- Installation of new wing walls and abutment to El-18'.

The general subsurface profile consisted of layers of silty sand fill, organic clays silts, varved clay and silty, sandy till, decomposed rock and bedrock. Although the existing stratigraphy varies across the site, it can be summarized as follows:

- The top layer generally consisting of dense clayey silty fine to coarse sand with trace to some gravel, bricks, wood and coal which extends to approximately El-21'.
- The top layer is underlain by soft to very soft organic clayey silt with some sand which extends to approximately El-30'.
- Beneath the organic clayey silt there are alternating varves of grey and light brown stiff silty glacial clay. These varves extend to approximately El-38'.
- Bedrock is at approximately El-70' with approximately 25' of decomposed rock above it.

Water Treatment System

The proposed temporary water treatment system can treat a maximum of 600 gpm of water generated from dewatering activities. The water treatment system has been designed to remove elevated levels of Total Suspended Solids (TSS), Volatile Organic Compounds (VOCs) and Oil & Grease. We have assumed that any metals present in the raw water are associated with the Total Suspended Solids (TSS) and can be removed by coagulation/flocculation/clarification/bag filtration. The temporary treatment system will consist of the following major components:

- One (1) influent settling tank
- One (1) chemical mix tank
- One (1) chemical injection and storage unit
- One (1) bulk settling clarifier
- One (1) sludge pump
- One (1) cone bottom tank
- One (1) duplex centrifugal transfer pump skid
- Three (3) 6-bag filter housings, parallel operation
- Two (2) liquid phase granular activated carbon adsorbers, series operation
- One (1) effluent flow meter

Water from the dewatering system will be directed to the influent settling tank. The settling tank will be elevated (on a man made berm or on cribbing provided by others) to allow the water to flow by gravity to the chemical mix tank. The influent settling tank is constructed of steel and has a total of four (4) over/under weirs to facilitate the settling of solids. The influent settling tank has a nominal volume of 10,000 gallons. At the design water flow rate of 600 gpm, the influent settling tank will provide approximately 17 minutes of detention time. The influent settling tank is constructed with an open top for ease of cleaning.

Water will flow by gravity from the influent settling tank to the chemical mix tank. The chemical mix tank is constructed of steel and has a nominal volume of 10,000 gallons. At the design water flow rate of 600 gpm, the chemical mix tank will provide approximately 17 minutes of detention time. The mix tank is constructed with an open top for ease of cleaning.

A coagulant and flocculent will be injected to facilitate the settling of solids in the raw water stream. A coagulant (such as ADEGA WC-500) is used to change the electrical charge of the fine particles and to cause a destabilization of the particles. The coagulant will be injected directly into a coagulation chamber in the chemical mix tank via a chemical metering pump. Flocculent (such as ADEGA AP-220) is used to bring the charged particles together and to make them heavier which will allow for better settling in the bulk settling clarifier. The flocculent will be provided as a dry powder and will need to be mixed with clean water on-site in order to make the proper liquid solution. The

flocculent solution will then be injected into the flocculation chamber in the chemical mix tank via a chemical metering pump. Two (2) slow electric mixers equipped with VFD controllers in the chemical mix tank ensure that the flocculent is distributed throughout the water and help to agglomerate the particles further. The amount of coagulant/flocculent injected will be determined by an influent flow meter installed in the influent line.

The chemical mix tank will be elevated (on a man made berm or on cribbing provided by others) to allow the water to flow by gravity from the chemical mix tank to the bulk settling clarifier, thus preventing shearing of the agglomerated particles resulting from the addition of the coagulant and flocculent. The bulk settling clarifier is equipped with a number of features that will facilitate both the settling of solids and routine maintenance of the unit. Water to the bulk settling clarifier is directed to an influent chamber. A weir plate extending from the top of the unit forces the water underneath a removable steel basket containing settling tube media. Treated water flows upward through the settling tubes while solids collect and fall to the bottom of the bulk settling clarifier. Tube settlers capture the settleable fine floc that escapes the clarification zone beneath the tube settlers and allows the larger floc to travel to the tank bottom in a more settleable form. The tube settler's channel collects solids into a compact mass which promotes the solids to slide down the tube channel.

Solids and/or sludge that have settled to the bottom of the clarifier will need to be periodically removed to prevent accumulated material from clogging the tube settlers thus reducing the efficiency of the unit. The base of the bulk settling clarifier contains a series of valved clean out ports. Solids/sludge can be pumped from these ports to a sludge holding tank through the use of an electric diaphragm sludge pump. Water decanted from the sludge holding tank can be introduced back to the head of the plant while the remaining solids will need to be periodically disposed of in accordance with all local, state and federal regulations. The waste products from cleaning the clarifier cannot be pumped back to the head of the treatment system. The waste products from cleaning the clarifier will be disposed of in accordance with all local, State and federal regulations.

Clarified water rises above the settling tube media and flows over a final weir plate into the duplex centrifugal pump skid which pumps water through the bag filter skid, and carbon adsorbers. The duplex pump skid will contain an integral control system and two (2) full capacity centrifugal pumps each capable of producing 600 gpm @ approximately 70' TDH (30 psi). The pumps will each be equipped with 25 Hp, 460V, 3 phase, 60 Hz electric motors. The control system will consist of two (2) pump motor starters and four (4) float controls – Pump 1 on, Pump 2 on, Pump 1 & 2 off, and a high level alarm which will activate an alarm light.

The bag filter skid will consist of three (3) multi-bag filter housings, each rated for a maximum flow of 600 gpm, plumbed in parallel. The inlet and outlet of the bag filter skid will be equipped with manifolds complete with isolation valves. Each of the filter

housings will contain six (6) bag filters designed to remove any remaining sediment prior to the resin units. It is anticipated that 5-micron filter bags will be utilized for this project. The inlet and outlet of each of the bag filter housings will be equipped with pressure gauges to monitor the differential pressure across each filter housing. The bag filters should be changed once the differential pressure across the housing reaches 15 to 20 psi. The bag filter housings will be plumbed in parallel such that the bags in one (1) filter housing can be changed while the remaining two (2) filter housings continue to process water at the design water flow rate of up to 600 gpm. Used filters will be disposed of in accordance with all local, state and federal regulations.

If the bag filters are not properly operated and maintained, the differential pressure across the filter housings can rise to the point that the transfer pumps cannot pump water from the bulk settling clarifier faster than water is introduced into the bulk settling clarifier. The water level in the bulk settling clarifier will rise and eventually activate the high level alarm light. If the bag filters are not changed, the water level in the bulk settling clarifier will continue to rise and will eventually overflow.

The carbon adsorbers will each contain 10,000 lbs. of reactivated, granular liquid phase carbon media designed to remove low levels of SVOCs and VOCs such as BTEX (Benzene, Toluene, Ethyl Benzene, and Xylene) prior to discharge. Flexible hose will be provided to configure the carbon adsorbers in series operation. If breakthrough of SVOCs or VOCs occurs on the lead carbon adsorber, the water will temporarily be directed to the lag adsorber. The spent carbon will be removed from the lead adsorber and will be replaced with 10,000 lbs of reactivated carbon media. The spent carbon will be sampled to determine RCRA waste characteristics and will be disposed/reactivated accordingly.
The inlet and outlet of each carbon adsorber will be equipped with a pressure gauge to monitor the differential pressure across the carbon media. The differential pressure across each carbon adsorber should be recorded in a log book on a daily basis. If the differential pressure across a particular carbon adsorber rises to the point that water flow is restricted (as measured by the effluent flow meter), that carbon adsorber should be taken off line temporarily to backwash the media. The inlet and outlet of each carbon adsorber is equipped with fittings and valves to facilitate backwashing. Backwash water should be obtained from a clean water source such as a hydrant or a water truck. The waste water from the backwash process can be directed to the influent settling tank and will be processed through the treatment system.

A 6" diameter mechanical flow meter with a totalizer will be provided at the end of the treatment system to indicate the flow rate and to record the total gallons of water treated. The flow meter has an acceptable flow range of 90 to 1,200 gpm. Flow readings should be recorded daily in a log book.

The individual components of the system will be skid mounted to the greatest extent possible and will be interconnected using PVC piping and flexible suction hose. Pressure gauges and sample taps will be located throughout the system to monitor system

performance. Butterfly valves will be provided on the inlet and outlet of each of the major units to isolate them for maintenance.

The generators are manufactured by Multiquip or equivalent. Two generators were supplied, one operating and one as a backup system. The generators are 3 phase and supplies 480v. The generators may supply an output between 100kw-200kw, depending upon the power requirements.

Discharge from the treatment plant will be directed to a NYSDEC approved 60' 12" diameter flume as shown in the dewatering layout drawing located in the appendix. The discharge will be directed to the same existing outfall as utilized prior to the discovery of contamination.

Operating and Monitoring

The system will be operated and maintained by Maracap with technical assistance provided by Moretrench. Standby power and standby vacuum pump will be onsite and maintained in proper working order. The total discharge volume, average pump rate, and times of pump operation will be documented daily. The flow meters will be equipped with totalizers which measure the cumulative flow through a meter. Discharge monitoring requirements will be determined by NYSDEC as part of the STIP. Upon issuance of the STIP the Water Treatment Plan will be revised to include specific discharge monitoring requirements as per the NYSDEC.

Appendix A

Water Treatment System

- **Treatment System Layout**

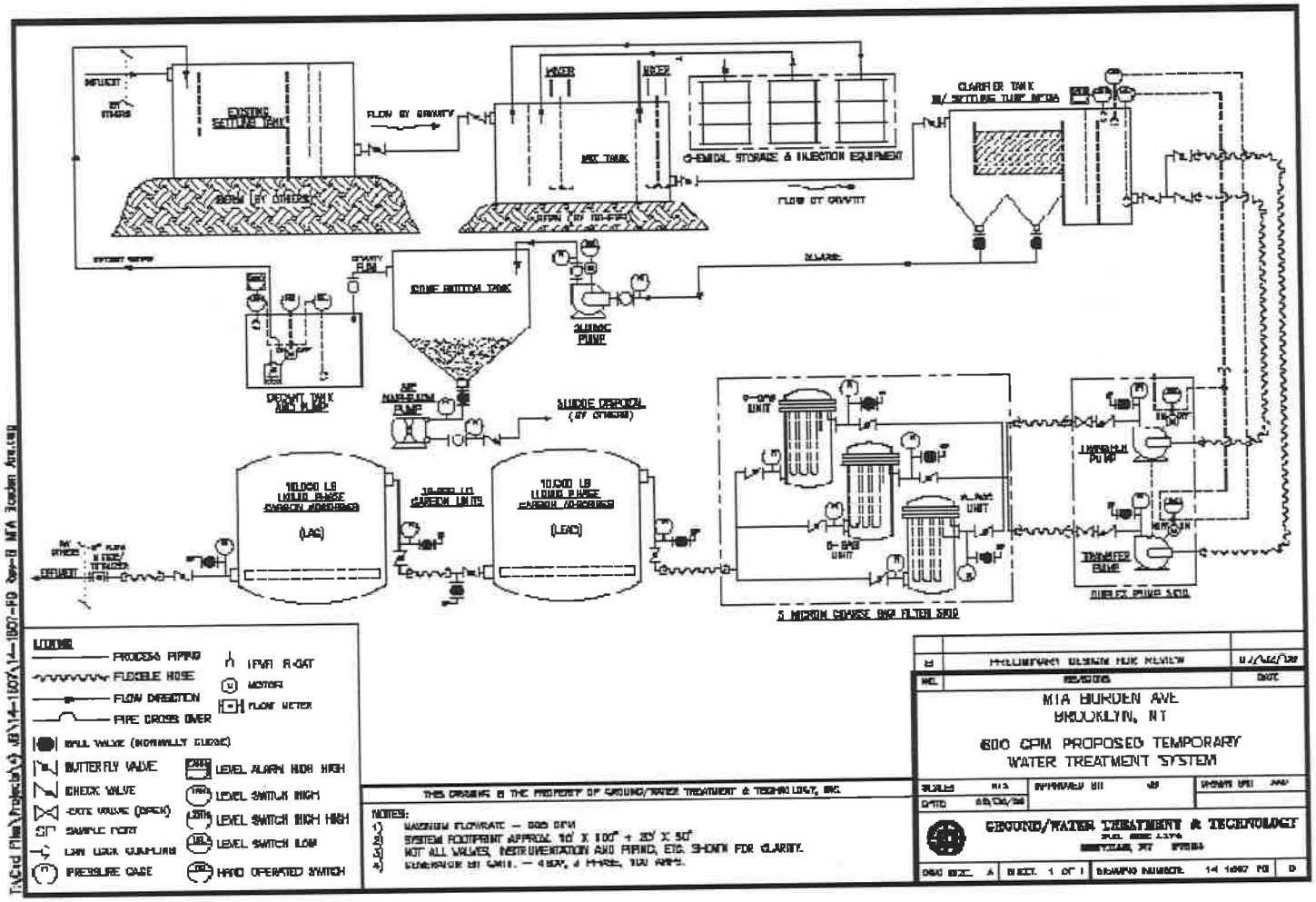

Borden Avenue Bridge
Queens, NY
7/23/09

Appendix B

Material & Equipment Specifications

T:\Cad Files\Rentals - STANDARD DRAWINGS\EQUIPMENT SPECIFICATIONS\TANKS\ST-0034-SPC Rev-C 50 Yard Roll-off Settling Tank.dwg, Layout

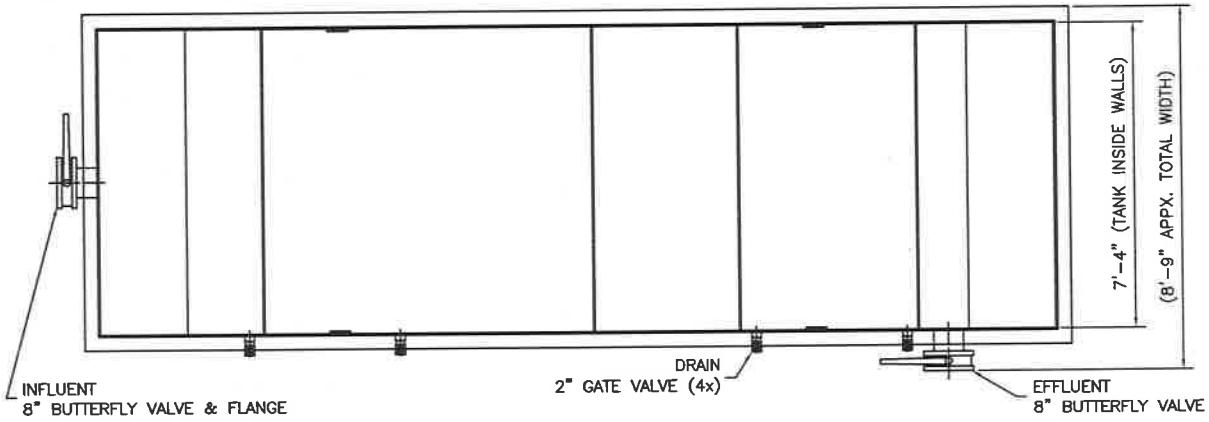

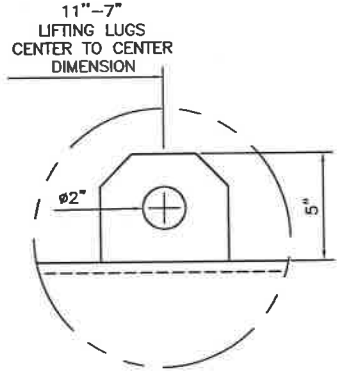

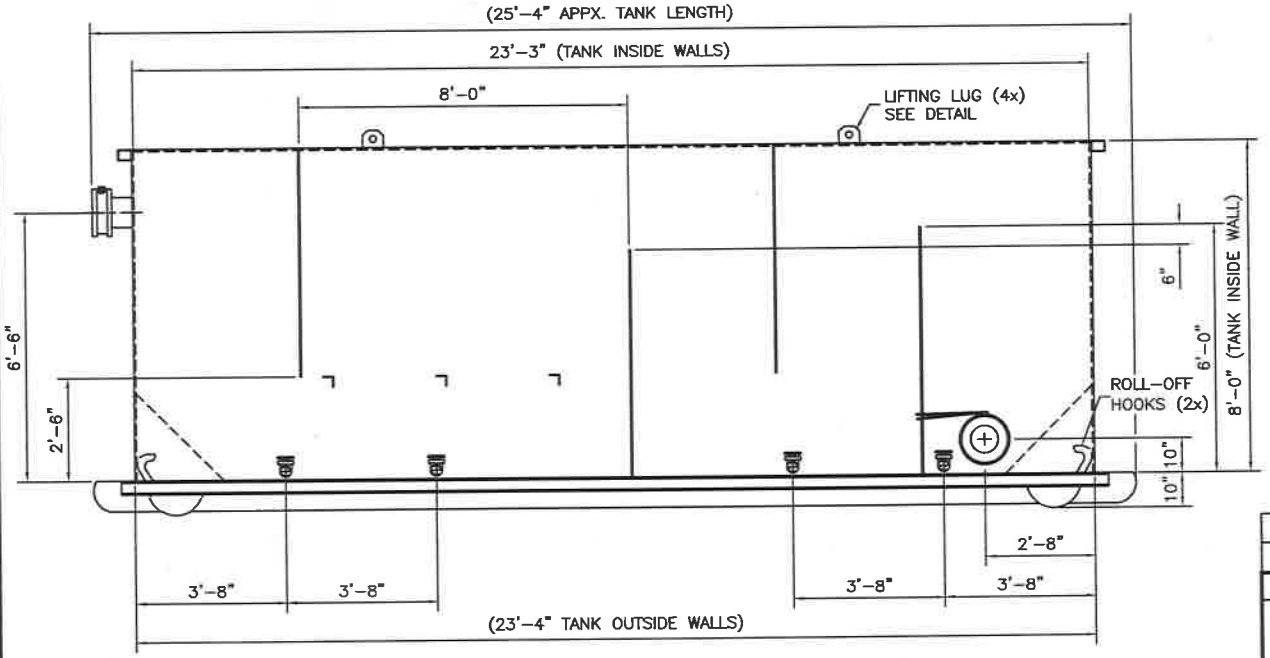

50 YARD ROLL-OFF SETTLING TANK

– TANK CONSTRUCTION:	A-36 CARBON STEEL
– INLET CONNECTION:	8" FLANGE
– OUTLET CONNECTION:	8" FLANGE
– DRAINS (4x):	2" NPT FEMALE COUPLING
– APPX. TANK WEIGHT (EMPTY):	10,000 Lbs.
– APPX. TANK WEIGHT (OPERATING):	75,000 Lbs.

	CAPACITY	
	VOLUME (GAL.)	DESIGN FLOW (GPM) @ 15 MIN. RETENTION
NOMINAL	10,000	666.7
OPERATING	7,500	500

NO.	REVISIONS	DATE
C	CHANGED VOLUMES AND ADDED RETENTION TIME	04/20/09

50 YARD ROLL-OFF SETTLING TANK STANDARD EQUIPMENT SPECIFICATION

SCALE: NTS	APPROVED BY: JB		DRAWN BY: AAV
DATE: 10/06/08			

GROUND/WATER TREATMENT & TECHNOLOGY
P.O. BOX 1174
DENVILLE, NJ 07834

THIS DRAWING IS THE PROPERTY OF
GROUND/WATER TREATMENT & TECHNOLOGY, INC

DWG SIZE: A	SHEET: 1 OF 1	DRAWING NUMBER: ST-0034-SPC	C

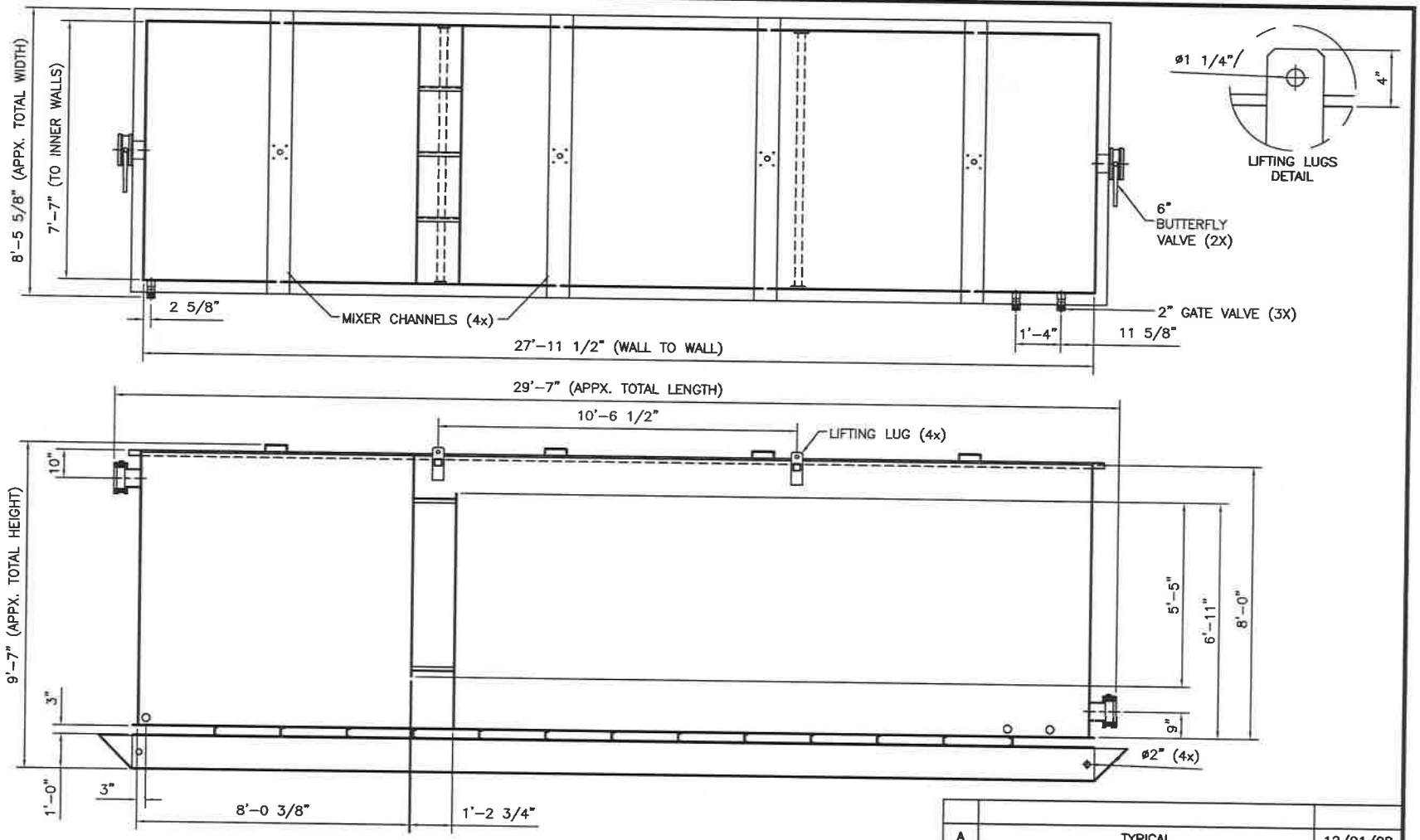

11,000 Gal. MIXING TANK SPECIFICATIONS

– GWTT EQUIPMENT NUMBER:	0342
– RIW NUMBER:	60231
– NOMINAL VOLUME:	11,000 GALLONS
– TANK CONSTRUCTION:	A-36 CARBON STEEL
– WATER INLET CONNECTION:	6" FLANGE
– WATER OUTLET CONNECTION:	6" FLANGE
– DRAINS (3x):	2" GATE VALVES
– APPX. TANK WEIGHT (EMPTY):	17,000 Lbs.
– APPX. TANK WEIGHT (OPERATING):	110,000 Lbs.

NO.	REVISIONS	DATE
A	TYPICAL	12/01/08

11,000 Gal. MIXING SETTLING TANK
GWTT# 0342
EQUIPMENT SPECIFICATION

SCALE: NTS	APPROVED BY: JB	DRAWN BY: AAV	
DATE: 12/01/08			

GROUND/WATER TREATMENT & TECHNOLOGY
P.O. BOX 1174
DENVILLE, NJ 07834

THIS DRAWING IS THE PROPERTY OF
GROUND/WATER TREATMENT & TECHNOLOGY, INC

DWG SIZE: B	SHEET: 1 OF 1	DRAWING NUMBER: EQ-0342-SPC	A

T:\Cad Files\Rentals - EQUIPMENT DRAWINGS\SPECIFICATION\TANKS\EQ-0342-SPC Rev-A 11k Gal Mixing Settling Tank.dwg

EQUIPMENT SPECIFICATIONS

DRAWING NO.: #05AFG0319-4
TAG NUMBERS: RAPID MIXER

DRIVE:

MODEL & SIZE:	POG-2-PTO
RATIO:	5.0:1
SERVICE FACTOR:	1.5 @ 100,000 HOURS
OUTPUT SPEED:	350 RPM
MOUNTING:	BASEMOUNT
GEAR REDUCTION:	SINGLE

SHAFT:

MATERIAL:	316 S.S.
SIZE (DIA.):	1.25"
RIGID COUPLING:	N/A

IMPELLERS:

MATERIAL:	316 S.S.
IMPELLER:	ONE: PROPELLER (CAST/SETSCREW)
DIAMETER:	14.0"

MOTOR:

MANUFACTURER:	RELIANCE
HP:	2
FRAME SIZE:	56C
ENCLOSURE:	TEFC
MOUNTING:	C-FLANGE
SERVICE FACTOR:	1.35
SYNCHRONOUS SPEED:	1800
SERVICE (PH/HZ/V):	3/60/230/460

STANDARD EFFICIENCY, STANDARD DUTY

R2-20090903-575

NEW YORK STATE
DEPARTMENT OF ENVIRONMENTAL CONSERVATION

STIPULATION PURSUANT TO SECTION 17-0303 OF THE ENVIRONMENTAL CONSERVATION LAW AND SECTION 176 OF THE NAVIGATION LAW BY:

NYSDEC Spill No. 0903437

New York City Department of Transportation,

Respondent.

1. The New York State Department of Environmental Conservation is responsible for the cleanup and removal of discharges of petroleum pursuant to Article 12 of the Navigation Law and Article 17 of the Environmental Conservation Law.

2. The Respondent has agreed to clean up and remove a discharge of petroleum which was discovered on or about June 23, 2009 within the excavation limits of the cofferdam at the Borden Avenue Bridge, Long Island City, New York (the "Site") by taking the steps and according to the conditions set forth in the Corrective Action Plan below.

3. This Stipulation does not affect the Department's right to pursue any claims that the Department may have against the Respondent, including but not limited to claims for violation of the Navigation Law and/or the Environmental Conservation Law. This Stipulation does not affect any defenses that the Respondent may have to any such claims.

4. The Respondent, without admitting liability, consents to the issuance of this Stipulation, waives the right to notice and hearing with respect to the issuance and entry of this Stipulation as provided by law, and agrees to be bound by the terms of this Stipulation, including any attachments hereto.

5. This Stipulation is equivalent to an order pursuant to ECL § 17-0303 and a directive pursuant to NL § 176 and is enforceable as such.

6. The Corrective Action Plan may be modified in writing as may be agreed between the parties. The Corrective Action Plan may be modified by the Department in the same manner as a Department permit. In the event of a conflict between the terms of this Stipulation and any Corrective Action Plan submitted pursuant to this Stipulation, the terms of this Stipulation shall control over the terms of the Corrective Action Plan.

7. The effective date of this Stipulation is the date it is signed by the Department.

This Stipulation shall terminate when the Department issues a written determination that no further remedial activities are required with respect to the petroleum discharge at the Site (the "Termination Date").

8. The Respondent and its employees, servants, agents, lessees, sublessees, successors, and assigns hereby waive any right to pursue reimbursement of monies expended by the Respondent prior to the Termination Date as against the State of New York or the New York Environmental Protection and Spill Compensation Fund (the "Spill Fund"), and agree to indemnify and hold harmless the Spill Fund from any and all legal or equitable claims, suits, causes of action, or demands whatsoever with respect to the Site that any of same has or may have as a result of the Respondent's entering into or fulfilling the terms of this Stipulation with respect to the Site.

NEW YORK CITY DEPARTMENT
OF TRANSPORTATION

9/3/09
Date

BY: _____

Henry Perahia, Deputy Comm.
Print name and title

September 15, 2009
Date

_____
Regional Director, NYSDEC Region 2

CORRECTIVE ACTION PLAN
SPILL NUMBER: 0903437

1. The Respondent shall implement the Remedial Action Work Plan as amended August 19, 2009 (the "RAWP"), approved by Department staff on August 31, 2009, within the implementation schedule set forth in the RAWP.

2. All approved submittals shall be an enforceable part of this Stipulation. If a submittal is disapproved, the Department shall specify any deficiencies and required modifications in writing. Within 15 days of receipt of the Department's disapproval notice, the Respondent shall submit a revised submittal which addresses the Department's comments, correcting all deficiencies identified in the disapproval notice.

3. All applicable permits for construction activities that will take place within the limits of waters and wetlands under the jurisdiction of the New York State Department of Environmental Conservation must be in place prior to the start of said work.

4. All water which has been collected as part of the construction activities, and which will be discharged to the Dutch Kills, must not exceed the allowable contaminant limits as set forth in Table 2 – Wastewater Limits for Surface Water Discharges (see attached).

5. Any modifications to this Corrective Action Plan must be approved in advance in writing by the Department. The Department reserves the right to require additional investigation and/or remedial action due to environmental conditions related to the subject spill which were unknown to the Department.

TABLE 2
Wastewater Limits For Surface Water Discharges

COMPOUND	GASOLINE	FUEL OIL
pH range	6.5 - 8.5	6.5 - 8.5
Benzene[1]	7 ug/l	7 ug/l
Ethylbenzene	5 ug/l	5 ug/l
Toluene	5 ug/l	5 ug/l
o-Xylene	5 ug/l	5 ug/l
m-Xylene	5 ug/l	5 ug/l
p-Xylene	5 ug/l	5 ug/l
Mixed xylenes	5 ug/l	5 ug/l
Naphthalene	10 ug/l	10 ug/l
MTBE	10 ug/l	10 ug/l

N A = not applicable

[1] The benzene limits for discharge to Class A surface waters are applicable for water bodies capable of 7:1 dilution ratio of base flow to discharge flow. The Division of Water may be consulted for assistance as needed.

MORETRENCH
....since 1931

SUBMITTAL

MORETRENCH
...since 1931

Borden Avenue Bridge

26 Borden Avenue
Queens, NY

WATER TREATMENT PLAN

July 23, 2009

Presented to:

Maracap Construction Industries Inc.
11018 15th Avenue
College Point, NY 11356

MORETRENCH
....since 1931

Borden Avenue Bridge

26 Borden Avenue
Queens, NY

WATER TREATMENT PLAN

Submitted to: Maracap Construction Industries Inc.

Prepared by

Moretrench American Corporation
51 Smart Avenue, Yonkers NY 10704

The submitted plan is based upon sound engineering principles and accepted industry practices and is reasonable for the described application. Responsibility for the design and installation of all structural elements contained herein, including but not limited to sheeting, underpinning, wood lagging, soldier beams and pilings is by others. Proper operation and supervision of the attached plan and construction of same are the responsibility of others as specified here-in.

MORETRENCH
....since 1931

Table of Contents

System Overview	4
Water Treatment System	5
Operating and Monitoring	8

Appendices

Appendix A	Treatment System Layout
Appendix B	Material & Equipment Specifications
Appendix C	System overview

July 23, 2009

MORETRENCH AMERICAN CORPORATION
51 Smart Avenue – Yonkers, NY 10704
(914) 423-1331

System Overview

As a result of the petroleum-impacted sediment encountered during emergency bridge repair work at Borden Avenue Bridge in Queens, NY, Moretrench, under subcontract to Maracap, amended its Dewatering Plan dated July 20, 2009 to include a Water Treatment System described herein. The amended plan addresses the treatment of impacted water from within the cofferdam and run off from the wet sediment stockpiles. The groundwater table will be lowered and withdrawn from the cofferdam through a series of permitted wells from within the confines of the cofferdam and treated on site through a designed water treatment system prior to discharge to the Dutch Kills. A SPDES Permit Equivalent Application is attached to the Corrective Action Plan (CAP) submitted by STV Incorporated on behalf of the New York City Department of Transportation. Please see the Corrective Action Plan for additional details on the project.

The existing sidewalk is approximately at El+19'. The water table is tidal and varies from El+0' to El-4'. All elevations are referenced to the Borough President of Manhattan Datum, which is 2.75' above Mean Sea Level at Sandy Hook, NJ.

Areas that will require dewatering are as follows:

- The bottom of existing abutment to be removed along west side of the embankment which extends to approximately El-18' with a length of approximately 70'.
- The bottom of existing wing walls to be removed on both ends extending to El-4'.
- Installation of new wing walls and abutment to El-18'.

The general subsurface profile consisted of layers of silty sand fill, organic clays silts, varved clay and silty, sandy till, decomposed rock and bedrock. Although the existing stratigraphy varies across the site, it can be summarized as follows:

- The top layer generally consisting of dense clayey silty fine to coarse sand with trace to some gravel, bricks, wood and coal which extends to approximately El-21'.
- The top layer is underlain by soft to very soft organic clayey silt with some sand which extends to approximately El-30'.
- Beneath the organic clayey silt there are alternating varves of grey and light brown stiff silty glacial clay. These varves extend to approximately El-38'.
- Bedrock is at approximately El-70' with approximately 25' of decomposed rock above it.

Water Treatment System

The proposed temporary water treatment system can treat a maximum of 600 gpm of water generated from dewatering activities. The water treatment system has been designed to remove elevated levels of Total Suspended Solids (TSS), Volatile Organic Compounds (VOCs) and Oil & Grease. We have assumed that any metals present in the raw water are associated with the Total Suspended Solids (TSS) and can be removed by coagulation/flocculation/clarification/bag filtration. The temporary treatment system will consist of the following major components:

- One (1) influent settling tank
- One (1) chemical mix tank
- One (1) chemical injection and storage unit
- One (1) bulk settling clarifier
- One (1) sludge pump
- One (1) cone bottom tank
- One (1) duplex centrifugal transfer pump skid
- Three (3) 6-bag filter housings, parallel operation
- Two (2) liquid phase granular activated carbon adsorbers, series operation
- One (1) effluent flow meter

Water from the dewatering system will be directed to the influent settling tank. The settling tank will be elevated (on a man made berm or on cribbing provided by others) to allow the water to flow by gravity to the chemical mix tank. The influent settling tank is constructed of steel and has a total of four (4) over/under weirs to facilitate the settling of solids. The influent settling tank has a nominal volume of 10,000 gallons. At the design water flow rate of 600 gpm, the influent settling tank will provide approximately 17 minutes of detention time. The influent settling tank is constructed with an open top for ease of cleaning.

Water will flow by gravity from the influent settling tank to the chemical mix tank. The chemical mix tank is constructed of steel and has a nominal volume of 10,000 gallons. At the design water flow rate of 600 gpm, the chemical mix tank will provide approximately 17 minutes of detention time. The mix tank is constructed with an open top for ease of cleaning.

A coagulant and flocculent will be injected to facilitate the settling of solids in the raw water stream. A coagulant (such as ADEGA WC-500) is used to change the electrical charge of the fine particles and to cause a destabilization of the particles. The coagulant will be injected directly into a coagulation chamber in the chemical mix tank via a chemical metering pump. Flocculent (such as ADEGA AP-220) is used to bring the charged particles together and to make them heavier which will allow for better settling in the bulk settling clarifier. The flocculent will be provided as a dry powder and will need to be mixed with clean water on-site in order to make the proper liquid solution. The

flocculent solution will then be injected into the flocculation chamber in the chemical mix tank via a chemical metering pump. Two (2) slow electric mixers equipped with VFD controllers in the chemical mix tank ensure that the flocculent is distributed throughout the water and help to agglomerate the particles further. The amount of coagulant/flocculent injected will be determined by an influent flow meter installed in the influent line.

The chemical mix tank will be elevated (on a man made berm or on cribbing provided by others) to allow the water to flow by gravity from the chemical mix tank to the bulk settling clarifier, thus preventing shearing of the agglomerated particles resulting from the addition of the coagulant and flocculent. The bulk settling clarifier is equipped with a number of features that will facilitate both the settling of solids and routine maintenance of the unit. Water to the bulk settling clarifier is directed to an influent chamber. A weir plate extending from the top of the unit forces the water underneath a removable steel basket containing settling tube media. Treated water flows upward through the settling tubes while solids collect and fall to the bottom of the bulk settling clarifier. Tube settlers capture the settleable fine floc that escapes the clarification zone beneath the tube settlers and allows the larger floc to travel to the tank bottom in a more settleable form. The tube settler's channel collects solids into a compact mass which promotes the solids to slide down the tube channel.

Solids and/or sludge that have settled to the bottom of the clarifier will need to be periodically removed to prevent accumulated material from clogging the tube settlers thus reducing the efficiency of the unit. The base of the bulk settling clarifier contains a series of valved clean out ports. Solids/sludge can be pumped from these ports to a sludge holding tank through the use of an electric diaphragm sludge pump. Water decanted from the sludge holding tank can be introduced back to the head of the plant while the remaining solids will need to be periodically disposed of in accordance with all local, state and federal regulations. The waste products from cleaning the clarifier cannot be pumped back to the head of the treatment system. The waste products from cleaning the clarifier will be disposed of in accordance with all local, State and federal regulations.

Clarified water rises above the settling tube media and flows over a final weir plate into the duplex centrifugal pump skid which pumps water through the bag filter skid, and carbon adsorbers. The duplex pump skid will contain an integral control system and two (2) full capacity centrifugal pumps each capable of producing 600 gpm @ approximately 70' TDH (30 psi). The pumps will each be equipped with 25 Hp, 460V, 3 phase, 60 Hz electric motors. The control system will consist of two (2) pump motor starters and four (4) float controls – Pump 1 on, Pump 2 on, Pump 1 & 2 off, and a high level alarm which will activate an alarm light.

The bag filter skid will consist of three (3) multi-bag filter housings, each rated for a maximum flow of 600 gpm, plumbed in parallel. The inlet and outlet of the bag filter skid will be equipped with manifolds complete with isolation valves. Each of the filter

housings will contain six (6) bag filters designed to remove any remaining sediment prior to the resin units. It is anticipated that 5-micron filter bags will be utilized for this project. The inlet and outlet of each of the bag filter housings will be equipped with pressure gauges to monitor the differential pressure across each filter housing. The bag filters should be changed once the differential pressure across the housing reaches 15 to 20 psi. The bag filter housings will be plumbed in parallel such that the bags in one (1) filter housing can be changed while the remaining two (2) filter housings continue to process water at the design water flow rate of up to 600 gpm. Used filters will be disposed of in accordance with all local, state and federal regulations.

If the bag filters are not properly operated and maintained, the differential pressure across the filter housings can rise to the point that the transfer pumps cannot pump water from the bulk settling clarifier faster than water is introduced into the bulk settling clarifier. The water level in the bulk settling clarifier will rise and eventually activate the high level alarm light. If the bag filters are not changed, the water level in the bulk settling clarifier will continue to rise and will eventually overflow.

The carbon adsorbers will each contain 10,000 lbs. of reactivated, granular liquid phase carbon media designed to remove low levels of SVOCs and VOCs such as BTEX (Benzene, Toluene, Ethyl Benzene, and Xylene) prior to discharge. Flexible hose will be provided to configure the carbon adsorbers in series operation. If breakthrough of SVOCs or VOCs occurs on the lead carbon adsorber, the water will temporarily be directed to the lag adsorber. The spent carbon will be removed from the lead adsorber and will be replaced with 10,000 lbs of reactivated carbon media. The spent carbon will be sampled to determine RCRA waste characteristics and will be disposed/reactivated accordingly.
The inlet and outlet of each carbon adsorber will be equipped with a pressure gauge to monitor the differential pressure across the carbon media. The differential pressure across each carbon adsorber should be recorded in a log book on a daily basis. If the differential pressure across a particular carbon adsorber rises to the point that water flow is restricted (as measured by the effluent flow meter), that carbon adsorber should be taken off line temporarily to backwash the media. The inlet and outlet of each carbon adsorber is equipped with fittings and valves to facilitate backwashing. Backwash water should be obtained from a clean water source such as a hydrant or a water truck. The waste water from the backwash process can be directed to the influent settling tank and will be processed through the treatment system.

A 6" diameter mechanical flow meter with a totalizer will be provided at the end of the treatment system to indicate the flow rate and to record the total gallons of water treated. The flow meter has an acceptable flow range of 90 to 1,200 gpm. Flow readings should be recorded daily in a log book.

The individual components of the system will be skid mounted to the greatest extent possible and will be interconnected using PVC piping and flexible suction hose. Pressure gauges and sample taps will be located throughout the system to monitor system

performance. Butterfly valves will be provided on the inlet and outlet of each of the major units to isolate them for maintenance.

The generators are manufactured by Multiquip or equivalent. Two generators were supplied, one operating and one as a backup system. The generators are 3 phase and supplies 480v. The generators may supply an output between 100kw-200kw, depending upon the power requirements.

Discharge from the treatment plant will be directed to a NYSDEC approved 60' 12" diameter flume as shown in the dewatering layout drawing located in the appendix. The discharge will be directed to the same existing outfall as utilized prior to the discovery of contamination.

Operating and Monitoring

The system will be operated and maintained by Maracap with technical assistance provided by Moretrench. Standby power and standby vacuum pump will be onsite and maintained in proper working order. The total discharge volume, average pump rate, and times of pump operation will be documented daily. The flow meters will be equipped with totalizers which measure the cumulative flow through a meter. Discharge monitoring requirements will be determined by NYSDEC as part of the STIP. Upon issuance of the STIP the Water Treatment Plan will be revised to include specific discharge monitoring requirements as per the NYSDEC.

Appendix A

Water Treatment System

- **Treatment System Layout**

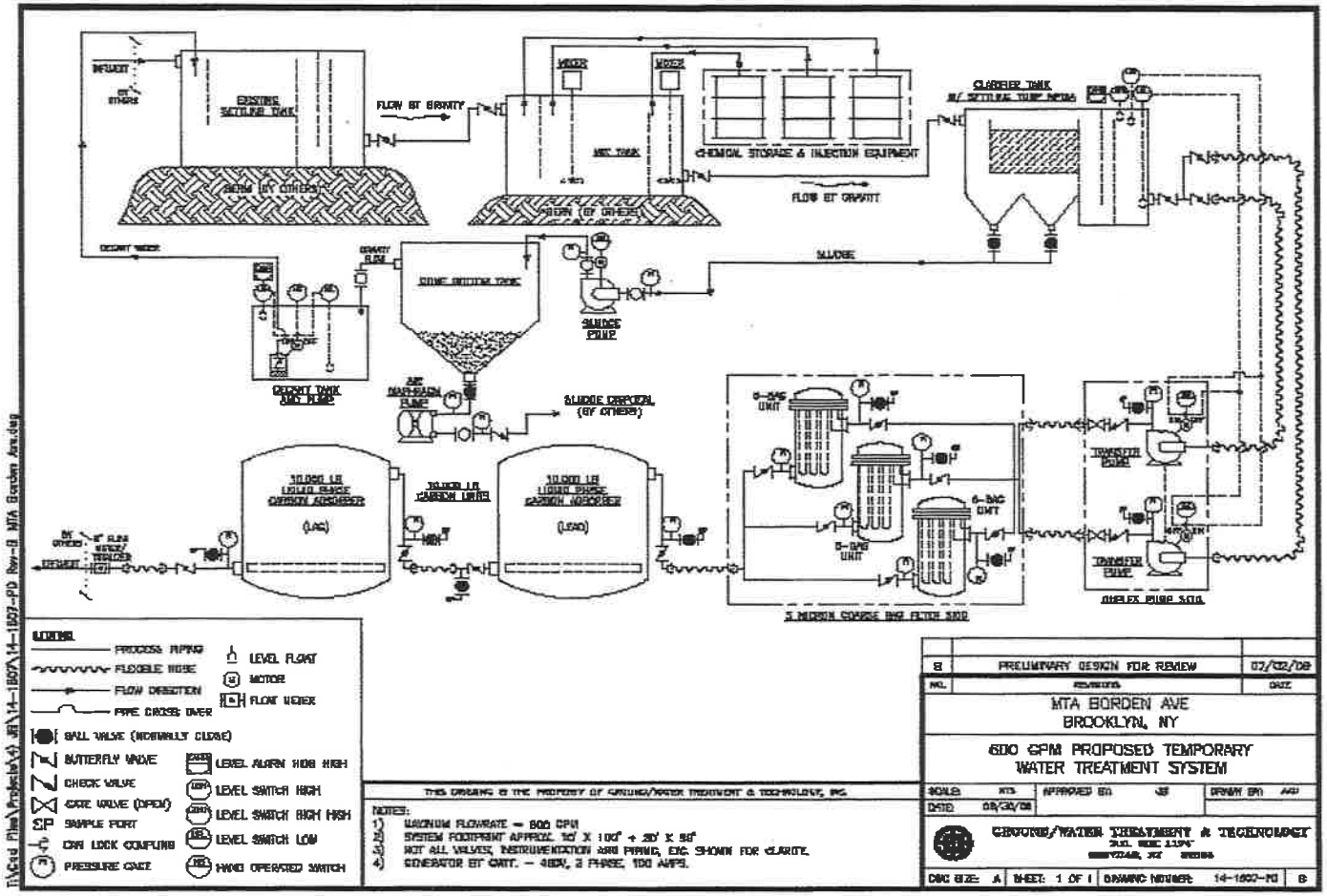

Borden Avenue Bridge
Queens, NY
7/23/09

Appendix B

Material & Equipment Specifications

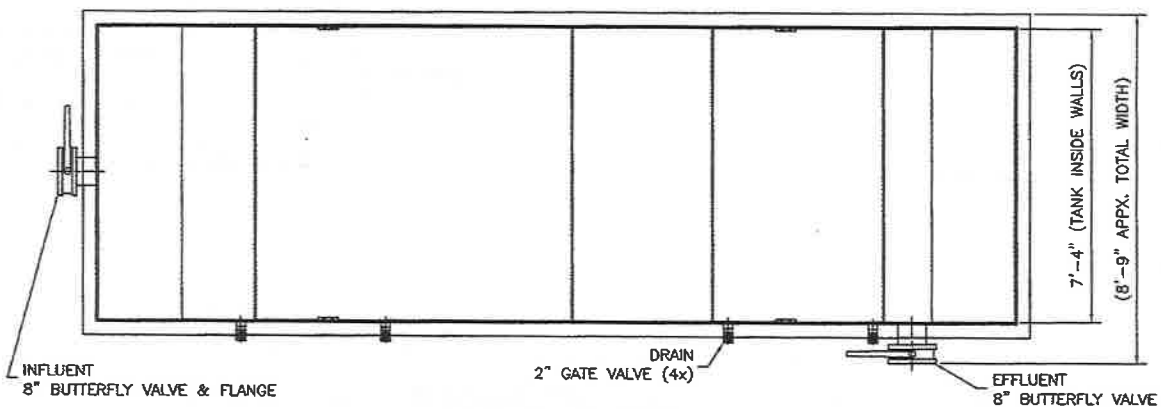

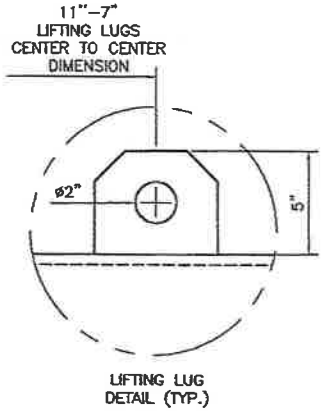

LIFTING LUG
DETAIL (TYP.)

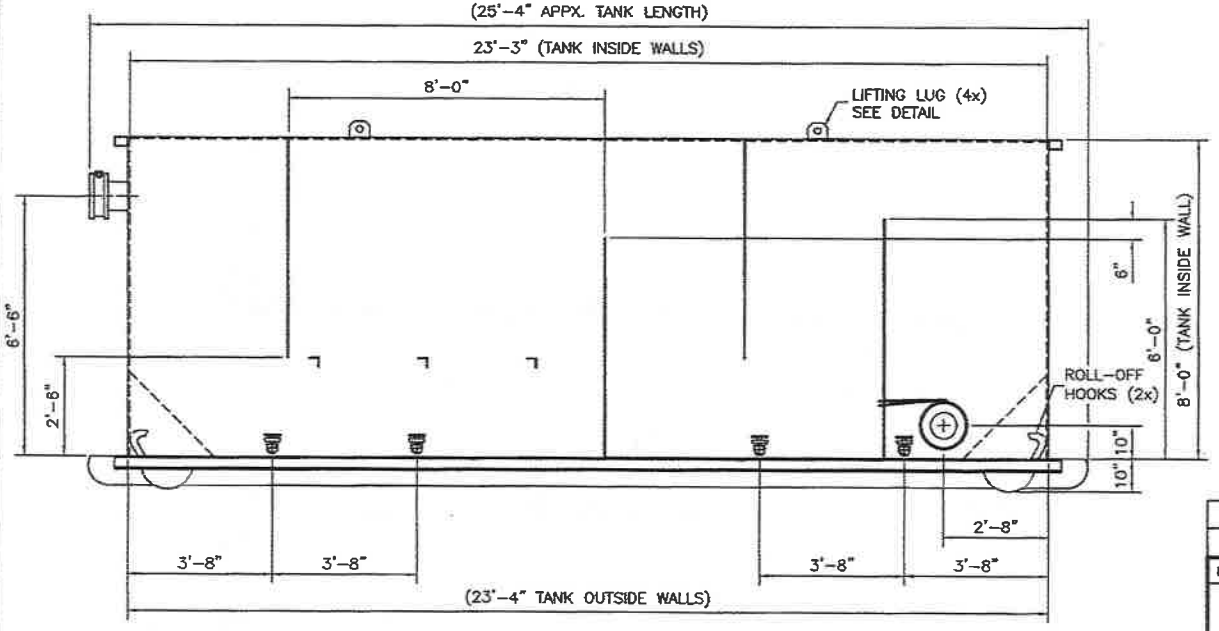

50 YARD ROLL-OFF SETTLING TANK

- TANK CONSTRUCTION:	A-36 CARBON STEEL
- INLET CONNECTION:	8" FLANGE
- OUTLET CONNECTION:	8" FLANGE
- DRAINS (4x):	2" NPT FEMALE COUPLING
- APPX. TANK WEIGHT (EMPTY):	10,000 Lbs.
- APPX. TANK WEIGHT (OPERATING):	75,000 Lbs.

	CAPACITY	
	VOLUME (GAL.)	DESIGN FLOW (GPM) @ 15 MIN. RETENTION
NOMINAL	10,000	666.7
OPERATING	7,500	500

NO.	REVISIONS	DATE
C	CHANGED VOLUMES AND ADDED RETENTION TIME	04/20/09

50 YARD ROLL-OFF SETTLING TANK STANDARD EQUIPMENT SPECIFICATION

SCALE: NTS	APPROVED BY: JB	DRAWN BY: AAV	
DATE: 10/06/08			

GROUND/WATER TREATMENT & TECHNOLOGY
P.O. BOX 1174
DENVILLE, NJ 07834

THIS DRAWING IS THE PROPERTY OF
GROUND/WATER TREATMENT & TECHNOLOGY, INC

DWG SIZE: A	SHEET: 1 OF 1	DRAWING NUMBER: ST-0034-SPC	C

T:\Cad Files\Rentals - STANDARD DRAWINGS\EQUIPMENT SPECIFICATION\TANKS\ST-0034-SPC Rev-C 50 Yard Roll-off Settling Tank.dwg, Letter

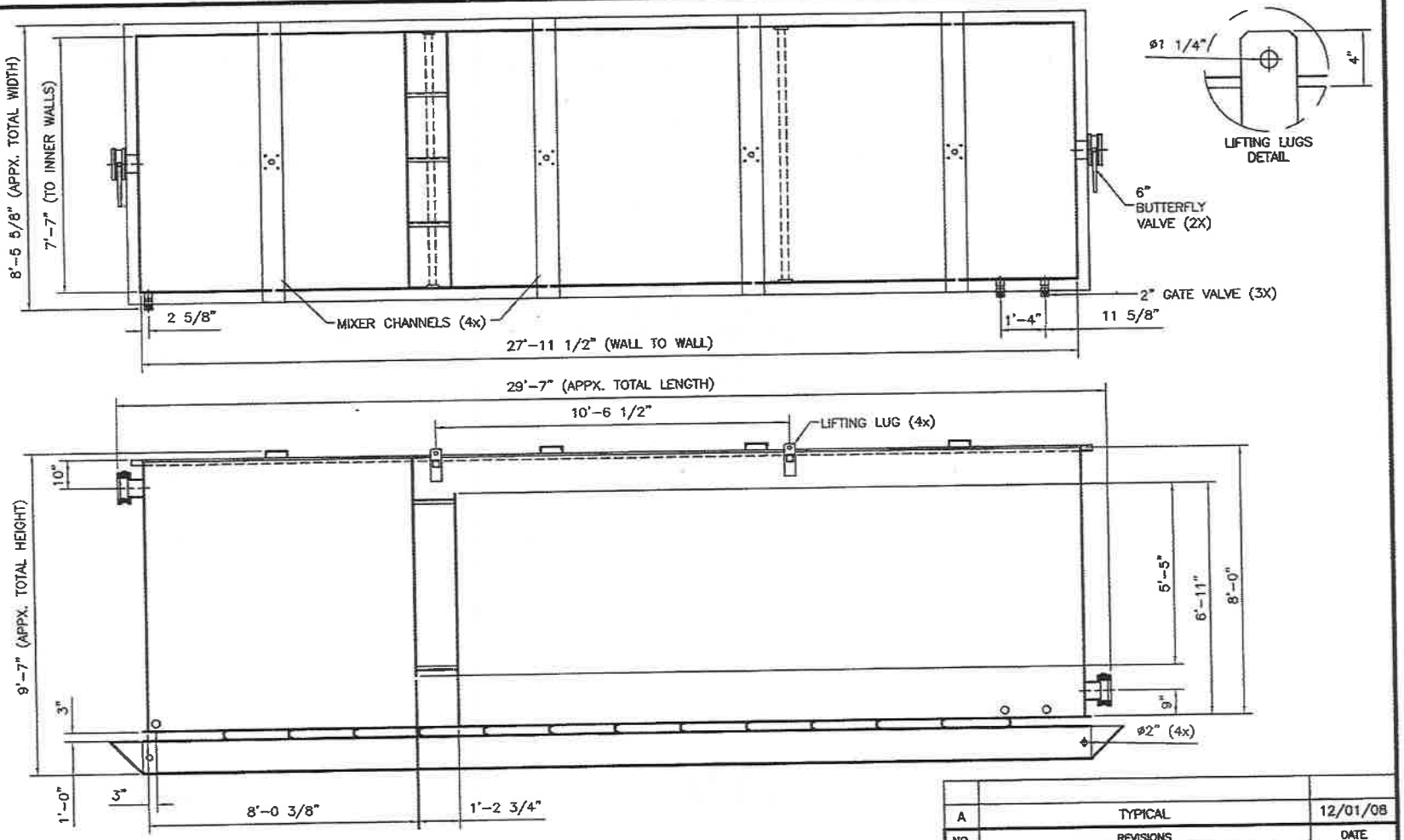

11,000 Gal. MIXING TANK SPECIFICATIONS

– GWTT EQUIPMENT NUMBER:	0342
– RIW NUMBER:	60231
– NOMINAL VOLUME:	11,000 GALLONS
– TANK CONSTRUCTION:	A-36 CARBON STEEL
– WATER INLET CONNECTION:	6" FLANGE
– WATER OUTLET CONNECTION:	6" FLANGE
– DRAINS (3x):	2" GATE VALVES
– APPX. TANK WEIGHT (EMPTY):	17,000 Lbs.
– APPX. TANK WEIGHT (OPERATING):	110,000 Lbs.

NO.	REVISIONS	DATE
A	TYPICAL	12/01/08

11,000 Gal. MIXING SETTLING TANK
GWTT# 0342
EQUIPMENT SPECIFICATION

SCALE: NTS	APPROVED BY: JB		DRAWN BY: AAV
DATE: 12/01/08			

GROUND/WATER TREATMENT & TECHNOLOGY
P.O. BOX 1174
DENVILLE, NJ 07834

THIS DRAWING IS THE PROPERTY OF
GROUND/WATER TREATMENT & TECHNOLOGY, INC

DWG SIZE: B	SHEET: 1 OF 1	DRAWING NUMBER: EQ-0342-SPC	A

T:\Cad Files\Rentals - EQUIPMENT DRAWINGS\SPECIFICATION\TANKS\EQ-0342-SPC Rev-A 11k Gal.Mixing Settling Tank.dwg

EQUIPMENT SPECIFICATIONS

DRAWING NO.: #05AFG0319-4
TAG NUMBERS: RAPID MIXER

DRIVE:

MODEL & SIZE:	POG-2-PTO
RATIO:	5.0:1
SERVICE FACTOR:	1.5 @ 100,000 HOURS
OUTPUT SPEED:	350 RPM
MOUNTING:	BASEMOUNT
GEAR REDUCTION:	SINGLE

SHAFT:

MATERIAL:	316 S.S.
SIZE (DIA.):	1.25"
RIGID COUPLING:	N/A

IMPELLERS:

MATERIAL:	316 S.S.
IMPELLER:	ONE: PROPELLER (CAST/SETSCREW)
DIAMETER:	14.0"

MOTOR:

MANUFACTURER:	RELIANCE
HP:	2
FRAME SIZE:	56C
ENCLOSURE:	TEFC
MOUNTING:	C-FLANGE
SERVICE FACTOR:	1.35
SYNCHRONOUS SPEED:	1800
SERVICE (PH/HZ/V):	3/60/230/460

STANDARD EFFICIENCY, STANDARD DUTY

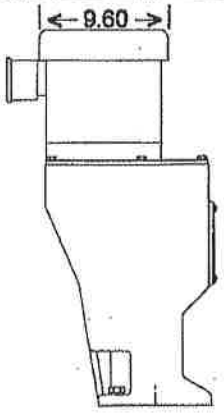

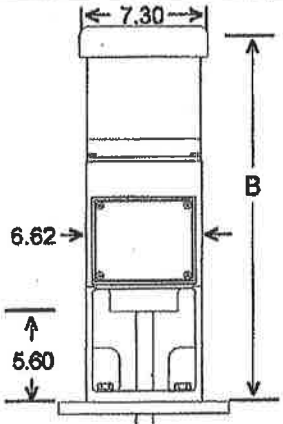

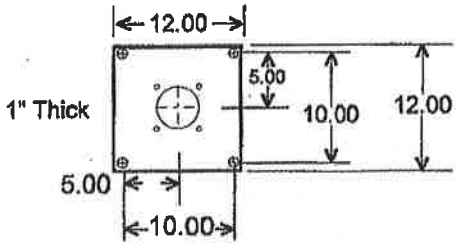

Baseplate Option

MODEL POG OPEN TANK

Model	HP	Motor RPM	Prop RPM	B	Approx. Wt. (in lbs.)
POG-14	1/4	1750	350	22.9	125
POG-13	1/3	1750	350	22.9	128
POG-12	1/2	1750	350	22.9	130
POG-34	3/4	1750	350	25.1	132
POG-11	1	1750	350	25.1	132
POG-15	1 1/2	1750	350	25.1	142
POG-2	2	1750	350	27.8	154

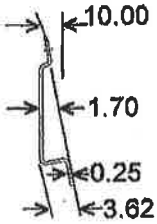

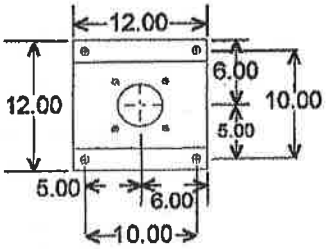

Angle Riser Option

MODEL DESIGNATIONS:

POG – Fixed Mount, Gear Drive, Open Tank
PSG – Seal, Fixed Mount, Gear Drive, Closed Tank
PMG – Mechanical Seal, Fixed mount, Gear Drive, Closed Tank

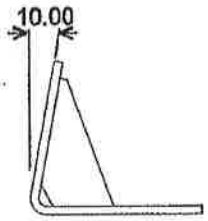

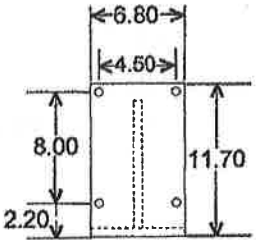

Wall Mount Option

Copyright ©2005 Philadelphia Mixing Solutions

Series JG

Gear Drive Mixer, Clamp or Cup Plate Mount
Heavy Helical Gear, 350 rpm, Grease Lube

Neptune's most powerful mixers for the most difficult mixing applications. Grease filled gearbox eliminates oil seal and the possibility of oil contamination of process.

Features

- No clutches to slip, wear or replace.
- 316SS propellers and shafts are standard. Optional coatings such as rubber, PVC or Teflon® also available.
- Square pitch 1.0 ratio marine propellers are used exclusively. Flow coefficients and power consumption characteristics equal those of the best hydrofoil impeller designs.
- Vibration-absorbing pad standard.
- Motors are available in TEFC or explosion-proof enclosures (1750 rpm, 56C frame). Air motors also available.
- Gears run in grease lubrication. Cannot leak oil.
- All JG mixer shaft bearings are permanently lubricated.
- Variable speed drives also available.
- Cast aluminum housing.
- Mounting clamp has adjustable angle of entry by indexed ball-and-socket design to achieve various process results.
- Fixed cup plate mount optional on 1/3 HP through 1½ HP. Standard on 2 HP and larger models.

Model Number	Standard Motor Description	A Shaft Length	B	C		D Shaft Diameter
				Single	Dual	
Totally-enclosed fan-cooled (TEFC)						
JG-2.0	1/3 HP-1-115/230	48"	17½"	10"	8"	¾"
JG-2.1	1/3 HP-3-230/460	48"	17⅜"	10"	8"	¾"
JG-3.0	1/2 HP-1-115/230	48"	18½"	12"	10"	¾"
JG-3.1	1/2 HP-3-230/460	48"	17⅜"	12"	10"	¾"
JG-4.0	3/4 HP-1-115/230	60"	18½"	13"	11"	¾"
JG-4.1	3/4 HP-3-230/460	60"	18½"	13"	11"	¾"
JG-5.1	1 HP-3-230/460	60"	18⅜"	14"	12"	1"
JG-6.1	1½ HP-3-230/460	60"	18¾"	15"	13"	1"
JG-7.1	2 HP-3-230/460	60"	20⅝"	16"	14"	1¼"
JG-8.1	3 HP-3-230/460	72"	21⅝"	16"	15"	1¼"
Explosion-proof class 1 group D (EP)						
JG-2.2	1/3 HP-1-115/230	48"	20½"	10"	8"	¾"
JG-2.3	1/3 HP-3-230/460	48"	17⅜"	10"	8"	¾"
JG-3.2	1/2 HP-1-115/230	48"	21"	12"	10"	¾"
JG-3.3	1/2 HP-3-230/460	48"	19⅝"	12"	10"	¾"
JG-4.2	3/4 HP-1-115/230	60"	21½"	13"	11"	¾"
JG-4.3	3/4 HP-3-230/460	60"	19⅝"	13"	11"	¾"
JG-5.3	1 HP-3-230/460	60"	20½"	14"	12"	1"
JG-6.3	1½ HP-3-230/460	60"	20½"	15"	13"	1"
JG-7.3	2 HP-3-230/460	60"	22½"	16"	14"	1¼"
Air motor						
JG-3.4	1/3 HP to 1/2 HP AIR Air Requirements: 12-20CFM at 40-80PSI	48"	17¼"	12"	10"	¾"
JG-4.4	3/4 HP AIR Air Requirements: 30CFM at 60PSI	60"	18"	13"	11"	¾"
JG-5.4	1 HP AIR Air Requirements: 40CFM at 40PSI	60"	19¼"	14"	12"	1"
JG-6.4	1½ HP AIR Air Requirements: 55CFM at 60PSI	60"	19¼"	15"	13"	1"
JG-7.4	2 HP AIR Air Requirements: 65CFM at 70PSI	60"	15¾"	16"	14"	1¼"
JG-8.4	4 HP AIR Air Requirements: 125CFM at 90PSI	72"	16¾"	16"	15"	1¼"

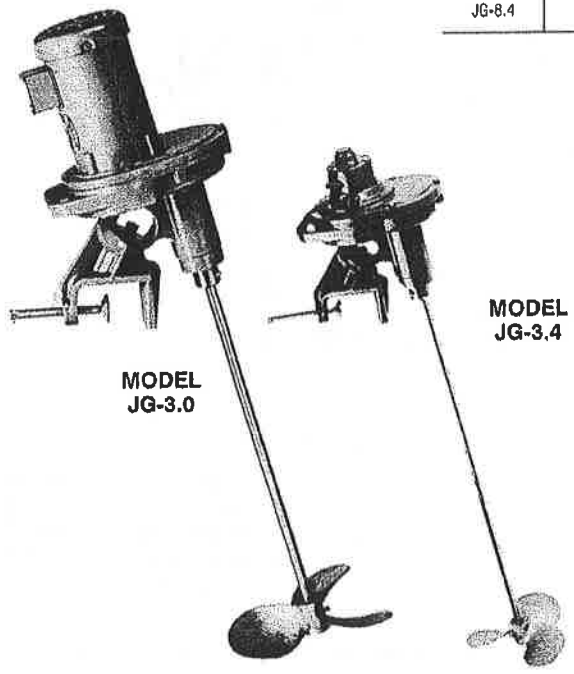

MODEL JG-3.0

MODEL JG-3.4

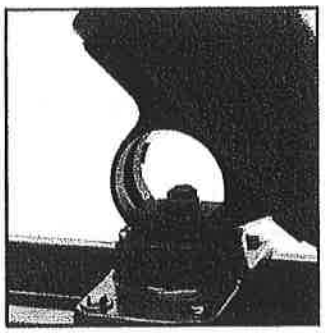

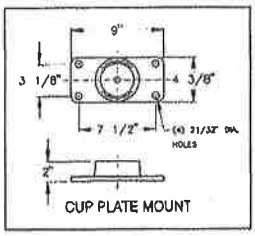

CUP PLATE MOUNT

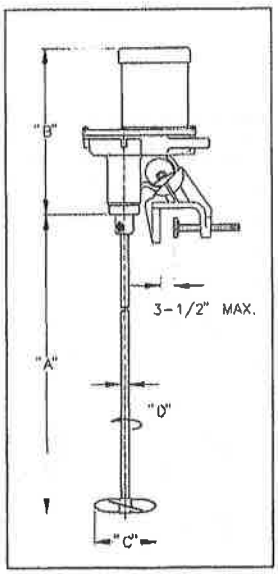

B731-468SI

Data Sheet

Series B

Electronic Metering Pumps

Configuration

Model B92 | 1 | - 392SI

Control & Output Code

Manual Control
Speed (stroking frequency) and stroke length manually adjustable

B11 --- 1.6 GPH	(6.1 l/h)	--- 150 psi	(10.30 Bar)
B12 --- 2.5 GPH	(9.5 l/h)	--- 100 psi	(6.90 Bar)
B13 --- 4.5 GPH	(17.0 l/h)	--- 50 psi	(3.50 Bar)
B14 --- 7.0 GPH	(26.5 l/h)	--- 30 psi	(2.07 Bar)

Instrument Responsive / Manual Control
Manual adjustment features of Series B1 plus switch conversion to external control for automatic systems.

B71 --- 1.6 GPH	(6.1 l/h)	--- 150 psi	(10.30 Bar)
B72 --- 2.5 GPH	(9.5 l/h)	--- 100 psi	(6.90 Bar)
B73 --- 4.5 GPH	(17.0 l/h)	--- 50 psi	(3.50 Bar)
B74 --- 7.0 GPH	(26.5 l/h)	--- 30 psi	(2.07 Bar)
B91 --- 1.6 GPH	(6.1 l/h)	--- 150 psi	(10.30 Bar)
B92 --- 2.5 GPH	(9.5 l/h)	--- 100 psi	(6.90 Bar)
B93 --- 4.5 GPH	(17.0 l/h)	--- 50 psi	(3.50 Bar)
B94 --- 7.0 GPH	(26.5 l/h)	--- 30 psi	(2.07 Bar)

Voltage Code

1	120 VAC, US Plug
2	240 VAC, US Plug
3	220-240 VAC, DIN Plug
5	240-250 VAC, UK Plug
6	240-250 VAC, AUST/NZ Plug
7	220-240 VAC, SWISS Plug

Liquid End

See next page for complete Liquid End specifications and selection.

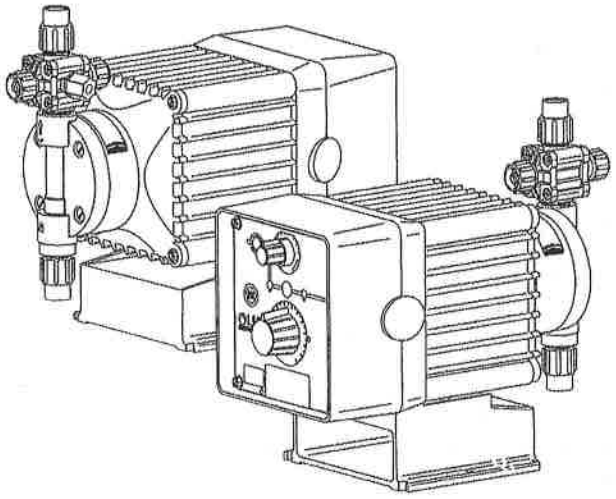

Specifications

Series	Strokes Per Minute (Adjustable) Min	Max	Stroke Length (Adjustable) Recommended Minimum	Average Input Power @ Max Speed	Shipping Weight
B11, B71, B91† B12, B72, B92† B13, B73, B93† B14, B74, B94†	1	100	10%	29 watts	15 lbs (6.9 kg)

† Series B9 pumps may be programmed for strokes per hour for lower outputs.

Dimensions

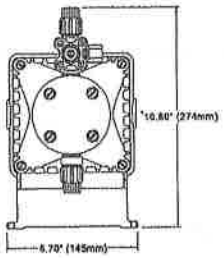

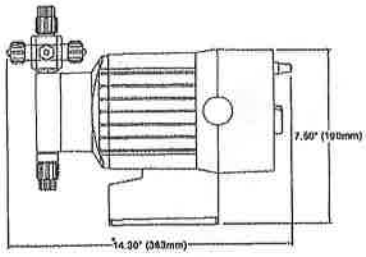

*DIMENSIONS SHOWN ARE MAXIMUM FOR LARGEST LIQUID END AVAILABLE. THESE DIMENSIONS VARY DEPENDING ON THE LIQUID END SELECTED.

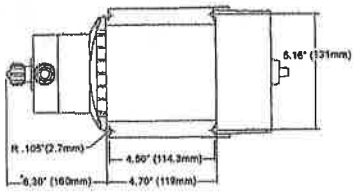

LMI MILTON ROY

8 Post Office Square
Acton, MA 01720 USA
TOLL FREE: (800) 564-1097
TEL: (978) 263-9800
FAX: (978) 264-9172
http://www.lmipumps.com

Replaces same of Rev. G 2/98
1417. H 4/02

Configuration Data & Materials of Construction

Drive Assembly	Liquid End No.	Size Code	Materials of Construction: Head & Fittings	Balls	Liquiflram™	Check Valve	Accessory	Tubing & Connections: Discharge	Suction
B92 ▩ -	498SI†	0.9	PVC / PVC	Ceramic	Fluorofilm™	PVDF / Polyprel®	4FV	PE .375" O.D.	
B91 ▩ -	490SI†	0.9	Acrylic / PVC	Ceramic	Fluorofilm™	PVDF / Polyprel®	4FV	PE .375" O.D.	
B72 ▩ -	490FI	0.9	Acrylic / PVDF	Ceramic	Fluorofilm™	PVDF / Polyprel®	4FV	PE .375" O.D.	
B71 ▩ -	398SI†	0.9	PVC / PVC	Ceramic	Fluorofilm™	PVDF / Polyprel®	4FV	PE .375" O.D.	
B12 ▩ -	393SI†	0.9	PVDF / PVDF	Ceramic	Fluorofilm™	PVDF / PTFE	4FV	PE .375" O.D.	
B11 ▩ -	392SI†	0.9	PVDF / PVDF	Ceramic	Fluorofilm™	PVDF / Polyprel®	4FV	PE .375" O.D.	
	85HV	0.9	Polypropylene	316 S.S.	Fluorofilm™	PTFE		PE .5" O.D.	Vinyl .938" O.D.
	86HV	0.9	Acrylic / PP	316 S.S.	Fluorofilm™	Hypalon®		PE .5" O.D.	Vinyl .938" O.D.
	89	0.9	UHMW PE	Ceramic	Hypalon®	Hypalon®		PE .5" O.D.	Vinyl .500" O.D.
	95S**	0.9	Polypropylene	Ceramic	Fluorofilm™	PTFE	4FV	PE .375" O.D.	
	297	0.9	316 S.S.	316 S.S.	Fluorofilm™	316 S.S.		Pipe 1/4" NPT M	
B93 ▩ -	468SI†	1.8	PVC / PVC	Ceramic	Fluorofilm™	PVDF / Polyprel®	4FV	PE .375" O.D.	
B73 ▩ -	460SI†	1.8	Acrylic / PVC	Ceramic	Fluorofilm™	PVC / Polyprel®	4FV	PE .375" O.D.	
B13 ▩ -	460FI	1.8	Acrylic / PVDF	Ceramic	Fluorofilm™	PVDF / Polyprel®	4FV	PE .375" O.D.	
	368SI†	1.8	PVC / PVC	Ceramic	Fluorofilm™	PVC / Polyprel®	4FV	PE .375" O.D.	
	363SI†	1.8	PVDF / PVDF	Ceramic	Fluorofilm™	PVDF / PTFE	4FV	PE .375" O.D.	
	362SI†	1.8	PVDF / PVDF	Ceramic	Fluorofilm™	PVDF / Polyprel®	4FV	PE .375" O.D.	
	75HV	1.8	Polypropylene	316 S.S.	Fluorofilm™	PTFE		PE .5" O.D.	Vinyl .938" O.D.
	75S**	1.8	Polypropylene	Ceramic	Fluorofilm™	PTFE	4FV	PE .5" O.D.	
	76HV	1.8	Acrylic / PP	316 S.S.	Fluorofilm™	Hypalon®		PE .5" O.D.	Vinyl .938" O.D.
	79	1.8	UHMW PE	Ceramic	Hypalon®	Hypalon®		PE .5" O.D.	Vinyl .500" O.D.
	277	1.8	316 S.S.	316 S.S.	Fluorofilm™	316 S.S.		Pipe 1/4" NPT M	
B94 ▩ -	418SI†	3.0	PVC / PVC	Ceramic	Fluorofilm™	PVC / Polyprel®	4FV	PE .5" O.D.	
B74 ▩ -	410SI†	3.0	Acrylic / PVC	Ceramic	Fluorofilm™	PVC / Polyprel®	4FV	PE .5" O.D.	
B14 ▩ -	410FI	3.0	Acrylic / PVDF	.375 PTFE	Fluorofilm™	PVDF / Polyprel®	4FV	PE .5" O.D.	
	318SI†	3.0	PVC / PVC	Ceramic	Fluorofilm™	PVC / Polyprel®	4FV	PE .5" O.D.	
	312SI†	3.0	PVDF / PVDF	Ceramic	Fluorofilm™	PVDF / Polyprel®	4FV	PE .5" O.D.	
	313SI†	3.0	PVDF / PVDF	Ceramic	Fluorofilm™	PVDF / PTFE	4FV	PE .5" O.D.	
	15S**	3.0	Polypropylene	Ceramic	Fluorofilm™	PTFE	4FV	PE .5" O.D.	
	217	3.0	316 S.S.	316 S.S.	Fluorofilm™	316 S.S.		Pipe 1/4" NPT M	

▩ See front page for voltage code specifications.

** These Liquid Ends are available without a 4FV.

† To specify ¼" NPT male, change 'I' to 'P'. To specify black, UV resistant tubing, change 'I' to 'U'. To specify Bleed 4FV, change 'S' to 'B'. To specify 3FV, change 'S' to'T'.

3FV Indicates that the pump is equipped with an LMI Three Function Valve (pressure relief, priming aid, line drain).

4FV Indicates that the pump is equipped with an LMI Four Function Valve. This diaphragm type anti-syphon/pressure relief valve is installed on the pump head. It provides anti-syphon protection and aids in priming, even under pressure.

Fluorofilm™ is a copolymer of PTFE and PFA.
Polyprel® is an elastomeric PTFE copolymer.

Polyprel is a registered trademark of Liquid Metronics Incorporated. Fluorofilm is a trademark of Liquid Metronics Incorporated. Hypalon is a registered trademark of E. I. du Pont de Nemours & Co., Inc.

Output Information

Series	Gallons per Hour* Min	Max	Liters per Hour* Min	Max	mL/cc per Minute* Min	Max	mL/cc per Stroke Min	Max	Maximum Injection Pressure
B11, B71, B91†	0.002	1.6	0.006	6.1	0.10	101	0.10	1.01	150 psi (10.30 Bar)
B12, B72, B92†	0.003	2.5	0.009	9.5	0.16	158	0.16	1.58	100 psi (6.90 Bar)
B13, B73, B93†	0.005	4.5	0.017	17.0	0.28	284	0.28	2.84	50 psi (3.50 Bar)
B14, B74, B94†	0.007	7.0	0.027	26.5	0.44	442	0.44	4.42	30 psi (2.07 Bar)

*Minimum output is based on one (1) stroke per minute and 10% stroke setting, minimum output can be reduced further in external mode.

†Series B9 pumps may be programmed for strokes per hour for lower outputs.

© 2002 LMI Milton Roy - All Rights Reserved
Printed in USA
Specifications subject to change without notice.

Specification Sheet
Series B

GENERAL
Chemical metering pumps shall be positive displacement, Liquifram™ type pumps that are UL and CUL approved. Output volume shall be adjustable while pumps are in operation from zero to maximum capacity of:

B11, B71, B91 - 1.6 GPH (6.1 liters per hour)
B12, B72, B92 - 2.5 GPH (9.5 liters per hour)
B13, B73, B93 - 4.5 GPH (17.0 liters per hour)
B14, B74, B94 - 7.0 GPH (26.5 liters per hour)

Chemical metering pumps shall be capable, without a hydraulically backed diaphragm, of injecting solutions against pressures up to:

B11, B71, B91 - 150 psig(10:3 bar)
B12, B72, B92 - 100 psig(6.9 bar)
B13, B73, B93 - 50 psig(3.4 bar)
B14, B74, B94 - 30 psig(2.1 bar)

SERIES B1
Adjustment shall be by means of readily accessible dial knobs, one for changing stroke length and the other for changing stroke frequency. Both knobs are to be located opposite the liquid handling end.

SERIES B7
Control of Series B7 metering pumps shall be selectable between internal and external pulsing by means of a 3-position center-off switch. Stroke length shall be adjustable by means of readily accessible dial knob. When in external pulsed mode, Series B7 units shall accept signals without the use of electrical timer or internal timer. Pressure capacity shall be adjustable to reduce noise, vibration and wear.

SERIES B9
Series B9 metering pumps shall have a clear liquid crystal display. Control shall be selectable between internal and external pulsing by means of a tactile keypad. Internal stroke frequency shall be adjustable from 1 stroke per hour to 100 strokes per minute. Pressure capacity shall be keypad adjustable to reduce noise, vibration and wear. Metering pump shall be capable of dividing or multiplying pulse inputs from 1 to 999 or responding directly or inversely to a 4-20mA input signal.

DRIVE
The pump drive shall be totally enclosed with no exposed moving parts. Solid state electronic pulser shall be fully encapsulated and supplied with quick connect terminals at least 3/16" (4.75 mm) wide. Electronics shall be housed in chemical resistant enclosure at the rear of the pump for maximum protection against chemical spillage. Electrical power consumption shall not exceed 29 watts per hour under full speed and maximum pressure conditions. Pump weight shall not exceed 15 lbs (6.9 kg).

AUTOMATIC PRESSURE RELIEF
To eliminate need for pressure relief valve, Liquifram™ shall automatically stop pulsating when discharge pressure exceeds pump pressure rating by not more than 35%.

MATERIAL
Chemical metering pump housing shall be of chemically resistant glass fiber reinforced thermoplastic. All exposed fasteners shall be stainless steel. Chemical metering pump valves shall be ball type, with ceramic balls[1]. Valve seat and seal ring shall be renewable by replacing the combination seat-seal ring[2] or cartridge valve assembly. Pump head shall be of transparent acrylic[3] material capable of resisting the pumped chemical. Fittings and connections at pump head shall be PVC[4].

CHECK VALVES AND TUBING
A total of 16 ft (4.8 m) of polyethylene tubing[5] shall be provided per pump complete with compression connections. A foot valve with integral one piece strainer shall be provided for the suction line, and an injection/back pressure check valve with ½" NPT male connection for the injection point. The injection check valve shall incorporate a dilating orifice which prohibits scale formation and accumulation of crystalline deposits.

Notes:
1. Type 316 stainless steel or PTFE may be specified.
2. Hypalon®, PTFE or Polyprel® may be specified.
3. PVDF, PVC, Polypropylene, or Type 316 stainless steel may be specified.
4. PVDF, Polypropylene, or Type 316 stainless steel may be specified.
5. 6 ft (1.8 m) of vinyl suction tubing may be specified in place of polyethylene for the suction side only. 1/4" or 1/2" pipe thread may be specified.

LMI MILTON ROY
8 Post Office Square
Acton, MA 01720 USA
TEL: (978) 263-9800
FAX: (978) 264-9172
http://www.lmipumps.com

Replaces same of Rev. F 7/96
1034. G 12/99

B Series

LE Codes	W	X	Y	Z
71T, 72T, 75T, 81T, 82T, 85T	3.25 (82.5mm)	8.5 (216.0mm)	.65 (16.5mm)	10.70 (271.8mm)
71S, 72S, 75S 81S, 82S, 85S	4.55(115.6mm)	9.7 (246.5mm)	.65 (16.5mm)	12.00 (304.8mm)
74, 94	3.25 (82.5mm)	8.5 (216.0mm)	.65 (16.5mm)	10.70 (271.8mm)
76, 86	3.55 (90.2mm)	9.5 (241.3mm)	.65 (16.5mm)	11.00 (279.4mm)
77, 97	3.25 (82.5mm)	8.5 (216.0mm)	.65 (16.5mm)	10.70 (271.8mm)
91T, 92T, 95T	3.25 (82.5mm)	8.5 (216.0mm)	.65 (16.5mm)	10.70 (271.8mm)
91S, 91FS 92S, 95S	4.55(115.6mm)	9.7 (246.5mm)	.65 (16.5mm)	12.00 (304.8mm)

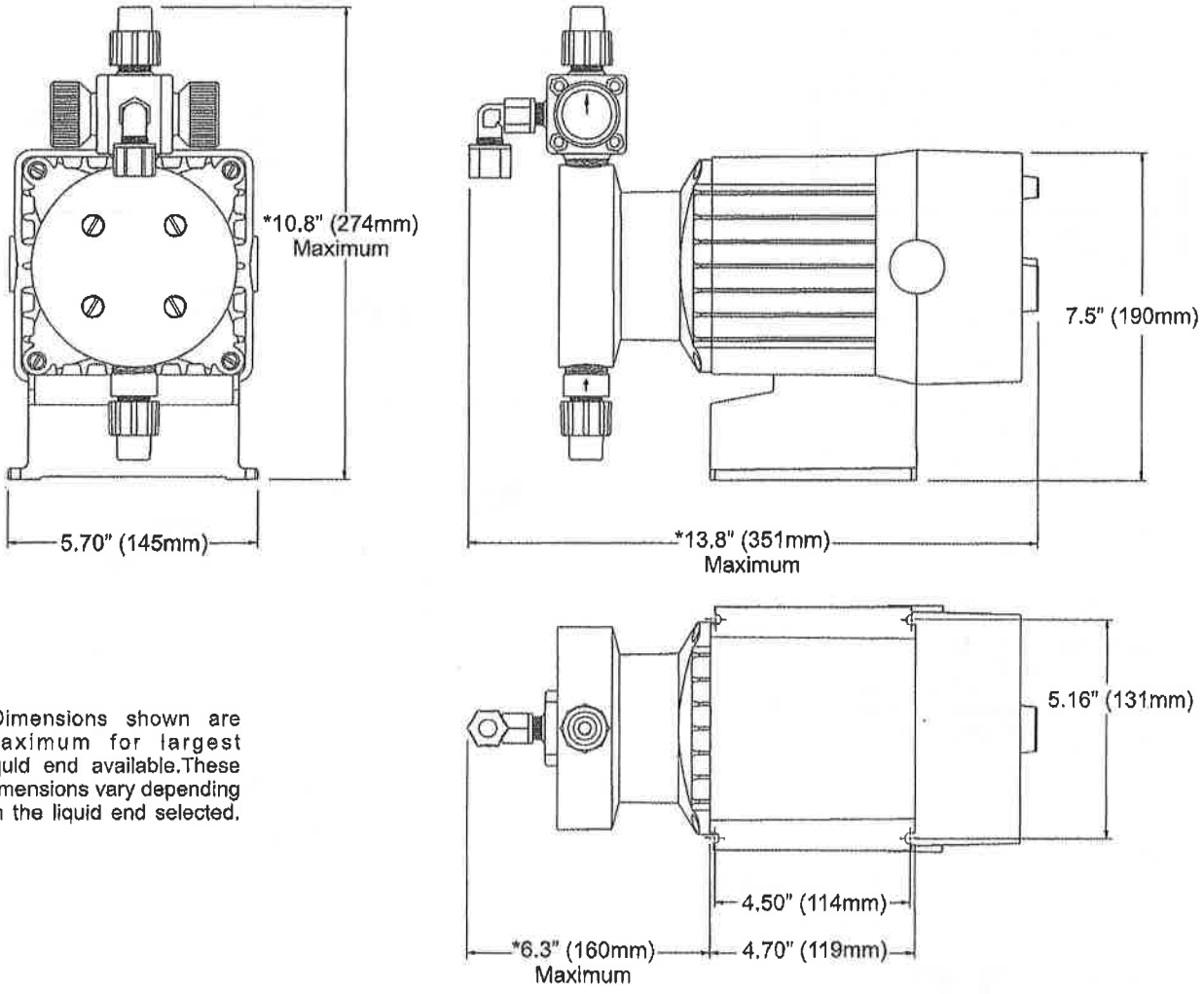

*Dimensions shown are maximum for largest liquid end available.These dimensions vary depending on the liquid end selected.

© 1999 LMI Milton Roy - All Rights Reserved
Printed in USA
Specifications subject to change without notice.

Polypre! is a registered trademark of Liquid Metronics Incorporated.
Liquifram, Liquitron, Micropace are trademarks of Liquid Metronics Incorporated.
Hypalon and Viton are registered trademarks of E. I. du Pont de Nemours & Co., Inc.

C771-26S & C781-35HV PUMPS

Data Sheet

Series C

Electronic Metering Pumps

Configuration Data

Model C92 1 - 363SI

Control & Output Code

Manual Control

Speed (stroking frequency) and stroke length manually adjustable.

C10 --- 1.3 GPH (4.9 l/h) ... 300 psi (20.7 Bar)
C11 --- 2.5 GPH (9.5 l/h) ... 150 psi (10.3 Bar)
C12 --- 4.0 GPH (15.1 l/h) ... 100 psi (6.9 Bar)
C13 --- 8.0 GPH (30 l/h) ..... 60 psi (4.1 Bar)
C14 --- 20 GPH (76 l/h) ..... 25 psi (1.7 Bar)

Instrument Responsive/Manual Control

Manual adjustment features of C1 Series plus switch conversion to external control for automatic systems.

C70 --- 1.3 GPH (4.9 l/h) ... 300 psi (20.7 Bar)
C71 --- 2.5 GPH (9.5 l/h) ... 150 psi (10.3 Bar)
C72 --- 4.0 GPH (15.1 l/h) ... 100 psi (6.9 Bar)
C73 --- 8.0 GPH (30 l/h) ..... 60 psi (4.1 Bar)
C74 --- 20 GPH (76 l/h) ..... 25 psi (1.7 Bar)
C76 --- 4.0 GPH (15.1 l/h) .... 175 psi (12.1 Bar)
C77 --- 10 GPH (38 l/h) ..... 80 psi (5.5 Bar)
C78 --- 25 GPH (95 l/h) ..... 30 psi (2.07 Bar)
C90 --- 1.3 GPH (4.9 l/h) .... 300 psi (20.7 Bar)
C91 --- 2.5 GPH (9.5 l/h) .... 150 psi (10.3 Bar)
C92 --- 4.0 GPH (15.1 l/h) .... 100 psi (6.9 Bar)
C93 --- 8.0 GPH (30 l/h) ..... 60 psi (4.1 Bar)
C94 --- 20 GPH (76 l/h) ..... 25 psi (1.7 Bar)

Voltage Code

1 ------- 120 VAC US Plug
2 ------- 240 VAC US Plug
3 ------- 220-240 VAC DIN Plug
5 ------- 240-250 VAC, UK Plug
6 ------- 240-250 VAC, AUST/NZ Plug
7 ------- 220-240 VAC, SWISS Plug

Liquid End

See next page for complete liquid end specifications and selection.

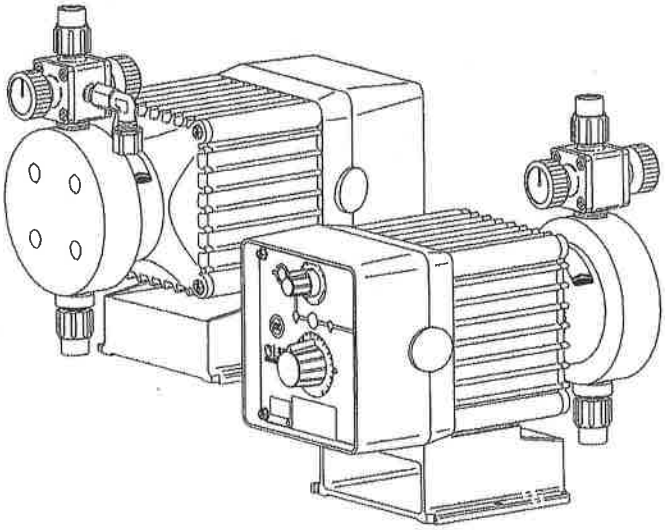

Specifications

Series	Strokes Per Minute (Adjustable) Min	Max	Stroke Length (Adjustable) Recommended Minimum	Average Input Power @Max Speed	Shipping Weight
C10, C70, C90 C11, C71, C91 C12, C72, C92 C13, C73, C93 C14, C74, C94	1	100	10%	44 watts	20 lbs (9.1 kg)
C76 C77 C78	1	100	10%	87 watts	28 lbs (12.7 kg)

Dimensions

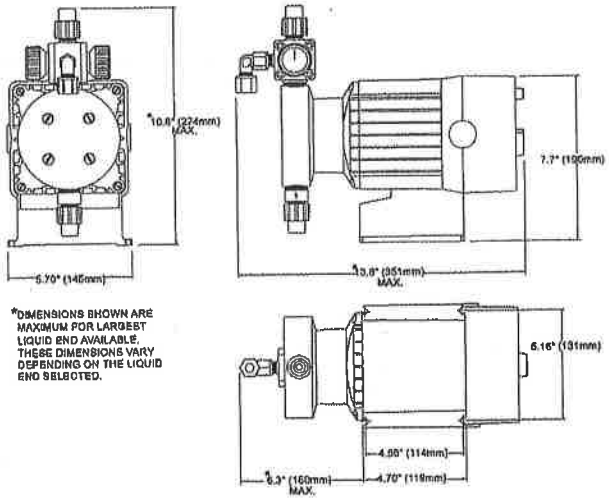

*DIMENSIONS SHOWN ARE MAXIMUM FOR LARGEST LIQUID END AVAILABLE. THESE DIMENSIONS VARY DEPENDING ON THE LIQUID END SELECTED.

LMI MILTON ROY

Florida Water Processing
http://www.watertreatmentsupply.com
800-783-4397

Polypro® is a registered trademark of Liquid Metronics Incorporated. Flourofilm and Liquiflram are trademarks of Liquid Metronics Incorporated. Hypalon and Viton are registered trademarks of E. I. du Pont de Nemours & Co., Inc.

© 2001 LMI Milton Roy - All Rights Reserved
Printed in USA

Replaces same of Rev.D 10/99
1712.E 11/01

Configuration Data & Materials of Construction

Drive Assembly	Liquid End No.	Size Code	Materials of Construction: Head & Fittings	Balls	Liquifram™	Check Valve	Accessory	Tubing & Connections: Discharge	Suction
C90 ▦ -	498SP	0.9	PVC	Ceramic	Fluorofilm™	PTFE	4FV	Pipe 1/4" NPT M	
C70 ▦ -	297	0.9	316 S.S.	316 S.S.	Fluorofilm™	316 S.S.		Pipe 1/4" NPT M	
C10 ▦ -									
	468SI	1.8	PVC / PVC	Ceramic	Fluorofilm™	PVDF / Polyprel®	4FV	PE .375" O.D.	
	460SI†	1.8	Acrylic / PVC	Ceramic	Fluorofilm™	PVDF / Polyprel®	4FV	PE .375 O.D.	
	460FI	1.8	Acrylic / PVC	PTFE	Fluorofilm™	PVDF / Polyprel®	4FV	PE .375 O.D.	
	368SI†	1.8	PVC / PVC	Ceramic	Fluorofilm™	PVDF / Polyprel®	4FV	PE .375" O.D.	
C92 ▦ -	362SI†	1.8	PVDF / PVDF	Ceramic	Fluorofilm™	PVDF / Polyprel®	4FV	PE .375" O.D.	
C91 ▦ -	363SI†	1.8	PVDF / PVDF	Ceramic	Fluorofilm™	PVDF / PTFE	4FV	PE .375" O.D.	
C72 ▦ -	75HV	1.8	Polypropylene	316 S.S.	Fluorofilm™	PTFE		PE .5" O.D.	Vinyl .938" O.D.
C71 ▦ -	75S*	1.8	Polypropylene	Ceramic	Fluorofilm™	PTFE	4FV	PE .5" O.D.	
C12 ▦ -	76HV	1.8	Acrylic/PP	316 S.S.	Fluorofilm™	Hypalon®		PE .5" O.D.	Vinyl .938" O.D.
C11 ▦ -	79	1.8	UHMW PE	Ceramic	Hypalon®	Hypalon®		PE .5" O.D.	Vinyl .5" O.D.
	277	1.8	316 S.S.	316 S.S.	Fluorofilm™	316 S.S.		Pipe 1/4" NPT M	
	418SI#	3.0	PVC / PVC	Ceramic	Fluorofilm™	PVDF / Polyprel®	4FV	PE .5" O.D.	
	410SI†#	3.0	Acrylic / PVC	Ceramic	Fluorofilm™	PVDF / Polyprel®	4FV	PE .5" O.D.	
	410FI†#	3.0	Acrylic / PVC	PTFE	Fluorofilm™	PVDF / Polyprel®	3FV	PE .5" O.D.	
C93 ▦ -	318SI†#	3.0	PVC / PVC	Ceramic	Fluorofilm™	PVDF / Polyprel®	4FV	PE .5" O.D.	
C73 ▦ -	313SI†#	3.0	PVDF / PVDF	Ceramic	Fluorofilm™	PVDF / PTFE	4FV	PE .5" O.D.	
C13 ▦ -	312SI†#	3.0	PVDF / PVDF	Ceramic	Fluorofilm™	PVDF / Polyprel®	4FV	PE .5" O.D.	
	20HV	3.0	Acrylic / PP	316 S.S.	Fluorofilm™	Hypalon®		PE .5" O.D.	Vinyl .938" O.D.
	22	3.0	PVDF	Ceramic	Fluorofilm™	PTFE		PE .5" O.D.	
	22P	3.0	PVDF	Ceramic	Fluorofilm™	PTFE		Pipe 1/2" NPT M	
	24	3.0	PVC	Ceramic	Fluorofilm™	PTFE		Pipe 1/2" NPT M	
	25HV	3.0	Polypropylene	316 S.S.	Fluorofilm™	PTFE		PE .5" O.D.	Vinyl .938" O.D.
	25P	3.0	Polypropylene	Ceramic	Fluorofilm™	PTFE		Pipe 1/2" NPT M	
	25T	3.0	Polypropylene	Ceramic	Fluorofilm™	PTFE		PE .5" O.D.	
	27	3.0	316 S.S.	316 S.S.	Fluorofilm™	PTFE		Pipe 1/2" NPT M	
	29	3.0	UHMW PE	Ceramic	Fluorofilm™	Hypalon®		PE .5" O.D.	
	30	6.0	Acrylic/PVC	Ceramic	Fluorofilm™	PTFE		PE .5" O.D	Vinyl .5" O.D.
	32	6.0	PVDF	Ceramic	Fluorofilm™	PTFE		PE .5" O.D.	
C94 ▦ -	32P	6.0	PVDF	Ceramic	Fluorofilm™	PTFE		Pipe 1/2" NPT M	
C78 ▦ -	34	6.0	PVC	Ceramic	Fluorofilm™	PTFE		Pipe 1/2" NPT M	
C74 ▦ -	35P	6.0	Polypropylene	Ceramic	Fluorofilm™	PTFE		Pipe 1/2" NPT M	
C14 ▦ -	35T	6.0	Polypropylene	Ceramic	Fluorofilm™	PTFE		PE .5" O.D.	
	36	6.0	PVC	Ceramic	Fluorofilm™	PTFE		PE .5" O.D.	
	37	6.0	316 S.S.	316 S.S.	Fluorofilm™	PTFE		Pipe 1/2" NPT M	
	468SP	1.8	PVC/PVC	Ceramic	Fluorofilm™	PVDF / Polyprel®	4FV	PE .375" O.D.	
C76 ▦ -	74S	1.8	Polypropylene	Ceramic	Fluorofilm™	PTFE	4FV	Pipe 1/4" NPT M	
	277	1.8	316 S.S.	316 S.S.	Fluorofilm™	316 S.S.		Pipe 1/4" NPT M	
	20HV	3.0	Acrylic/PP	316 S.S.	Fluorofilm™	Hypalon®		PE .5" O.D.	Vinyl .938" O.D.
	20S**	3.0	Acrylic/PVC	Ceramic	Fluorofilm™	Hypalon®	4FV	PE .5" O.D.	Vinyl .5" O.D.
	22	3.0	PVDF	Ceramic	Fluorofilm™	PTFE		Pipe 1/2" NPT M	
	22P	3.0	PVDF	Ceramic	Fluorofilm™	PTFE	4FV	Pipe 1/2" NPT M	
C77 ▦ -	24	3.0	PVC	Ceramic	Fluorofilm™	PTFE		Pipe 1/2" NPT M	
	25HV	3.0	Polypropylene	316 S.S.	Fluorofilm™	PTFE		PE .5" O.D.	Vinyl .938" O.D.
	25P	3.0	Polypropylene	Ceramic	Fluorofilm™	PTFE		Pipe 1/2" NPT M	
	25T	3.0	Polypropylene	Ceramic	Fluorofilm™	PTFE		PE .5" O.D.	
	26S**	3.0	PVC	Ceramic	Fluorofilm™	Viton®	4FV	PE .5" O.D.	
	27	3.0	316 S.S.	316 S.S.	Fluorofilm™	PTFE		Pipe 1/2" NPT M	
	29	3.0	UHMW PE	Ceramic	Fluorofilm™	Hypalon®		PE .5" O.D.	

▦ See front page for voltage code specifications.
**These Liquid Ends are available without a 4FV, simply drop the 'S' at the end of the Liquid End number to order the model without a 4FV.
#These liquid ends use 3/8" diameter balls. Pump output may be reduced in some applications.

†To specify ¼" NPT male, change 'I' to 'P'. To specify black, UV resistant tubing, change 'I' to 'U'. To specify Bleed 4FV, change 'S' to 'B'. To specify 3FV, change 'S' to 'T'.
Fluorofilm™ is a copolymer of PTFE and PFA.
Polyprel® is an elastomeric PTFE copolymer.

4FV indicates that the pump is equipped with an LMI Four Function Valve. This diaphragm type anti-syphon/pressure relief valve is installed on the pump head. It provides anti-syphon protection and aids in priming, even under pressure.

Output Information

Series	Gallons per Hour Min	Gallons per Hour Max	Liters per Hour Min	Liters per Hour Max	mL/cc per Minute Min	mL/cc per Minute Max	mL/cc per Stroke Min	mL/cc per Stroke Max	Maximum Injection Pressure
C10, C70*, C90*	0.001	1.3	0.005	4.9	0.08	82	0.08	0.82	300 psi (20.7 Bar)
C11, C71*, C91*	0.003	2.5	0.010	9.5	0.16	158	0.16	1.58	150 psi (10.3 Bar)
C12, C72*, C92*	0.004	4.0	0.015	15.1	0.25	252	0.25	2.52	100 psi (6.9 Bar)
C13, C73*, C93*	0.008	8.0	0.030	30.0	0.51	505	0.51	5.05	60 psi (4.1 Bar)
C14, C74*, C94*	0.020	20.0	0.076	76.0	1.26	1262	1.26	12.62	25 psi (1.7 Bar)
C76*	0.004	4.0	0.015	15.1	0.25	252	0.25	2.52	175 psi (12.1 Bar)
C77*	0.010	10.0	0.038	38.0	0.63	631	0.63	6.31	80 psi (5.5 Bar)
C78*	0.025	25.0	0.095	95.0	1.58	1577	1.58	15.77	30 psi (2.07 Bar)

*Minimum output is based on 1 stroke per minute and 10% stroke setting, minimum output can be reduced further in external mode. Series C9 pumps may be programmed for strokes per hour for lower outputs.

Specification Sheet

Series C

GENERAL

Chemical metering pumps shall be positive displacement, Liquifram™ type pumps that are UL and CUL approved. Output volume shall be adjustable while pumps are in operation from zero to maximum capacity of:

C10, C70, C90	- 1.3 GPH	(4.9 liters per hour)
C11, C71, C91	- 2.5 GPH	(9.5 liters per hour)
C12, C72, C92	- 4.0 GPH	(15.1 liters per hour)
C13, C73, C93	- 8.0 GPH	(30.0 liters per hour)
C14, C74, C94	- 20.0 GPH	(75.7 liters per hour)
C76*	- 4.0 GPH	(15.1 liters per hour)
C77*	- 10.0 GPH	(38.0 liters per hour)
C78*	- 25.0 GPH	(95.0 liters per hour)

Chemical metering pumps shall be capable, without a hydraulically backed diaphragm, of injecting solutions against pressures up to:

C10, C70, C90	- 300 psig	(20.7 bar)
C11, C71, C91	- 150 psig	(10.3 bar)
C12, C72, C92	- 100 psig	(6.9 bar)
C13, C73, C93	- 60 psig	(4.1 bar)
C14, C74, C94	- 25 psig	(1.7 bar)
C76*	- 175 psig	(12.1 bar)
C77*	- 80 psig	(5.5 bar)
C78*	- 30 psig	(2.1 bar)

TYPE C1

Adjustment shall be by means of readily accessible dial knobs, one for changing stroke length and the other for changing stroke frequency (speed). Both knobs are to be located opposite the liquid handling end.

TYPE C7

Control of Series C7 metering pumps shall be selectable between internal and external pulsing by means of a 3-position center-off switch. Stroke length shall be adjustable by means of readily accessible dial knob. When in external pulsed mode, Series C7 units shall accept signals without the use of electrical timer or internal timer. Pressure capacity shall be adjustable to reduce noise, vibration and wear.

TYPE C9

Series C9 metering pumps shall have a clear liquid crystal display. Control shall be selectable between internal and external pulsing by means of a tactile keypad. Internal stroke frequency shall be adjustable from 1 stroke per hour to 100 strokes per minute. Pressure capacity shall be keypad adjustable to reduce noise, vibration and wear. Metering pump shall be capable of dividing or multiplying pulse inputs from 1 to 999 or responding directly or inversely to a 4-20mA input signal.

DRIVE

The pump drive shall be totally enclosed with no exposed moving parts. Solid state electronic pulser shall be encapsulated and supplied with quick connect terminals at least 3/16" (4.75 mm) wide. Electronics shall be housed in chemical resistant enclosure at the rear of the pump for maximum protection against chemical spillage. Electrical power consumption shall not exceed 87 watts under full speed and maximum pressure conditions. Pump weight shall not exceed 28 lbs (12.7 kg).

AUTOMATIC PRESSURE RELIEF

To eliminate need for pressure relief valve, Liquifram™ shall automatically stop pulsating when discharge pressure exceeds pump pressure rating by not more than 35%.

MATERIAL

Chemical metering pump housing shall be of chemically resistant glass fiber reinforced thermoplastic with a glass fiber reinforced polypropylene EPU carrier[1]. All exposed fasteners shall be stainless steel. Chemical metering pump valves shall be ball type, with ceramic balls[2]. Valve seat and seal ring shall be renewable by replacing the combination seat-seal ring[3] or cartridge valve assembly. Pump head shall be of transparent acrylic[4] material capable of resisting the pumped chemical. Fittings and connections at pump head shall be PVC[5].

CHECK VALVES AND TUBING

A total of 16 ft (4.8 m) of polyethylene tubing[6] shall be provided per pump complete with compression connections. A foot valve with integral one piece strainer shall be provided for the suction line, and an injection check/back pressure valve with ½" NPT male connection for the injection point. The injection check valve shall incorporate a dilating orifice which prohibits scale formation and accumulation of crystalline deposits.

(* - Not UL or CUL Approved)

Notes:

1. With plastic coated cast iron EPU carrier for Series C 76, C77 and C78.
2. Type 316 stainless steel or PTFE may be specified.
3. Hypalon®, PTFE, Viton® or Polyprel® may be specified.
4. PVC, Polypropylene, PDVF or Type 316 stainless steel may be specified.
5. PVDF, Polypropylene, or Type 316 stainless steel may be specified.
6. 6 ft. (1.8 m) of vinyl suction tubing may be specified in place of polyethylene for the suction side only. 1/4" or 1/2" male pipe thread may be specified.

LMI MILTON ROY

201 Ivyland Road
Ivyland, PA 18974 USA
TOLL FREE: (800) 564-1097
TEL: (215) 293-0401
FAX: (215) 293-0445
http://www.lmipumps.com

Replaces same of Rev.E 8/05
1619. F 11/06

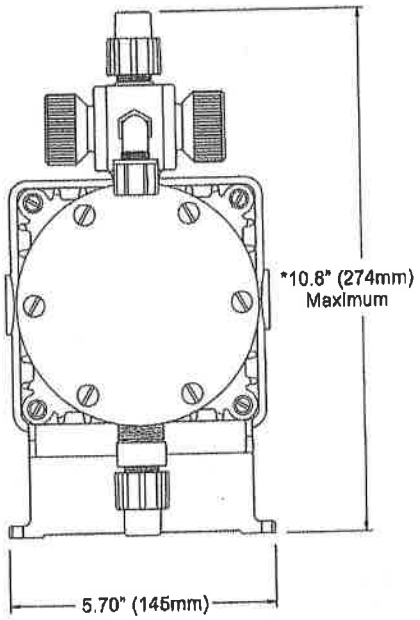

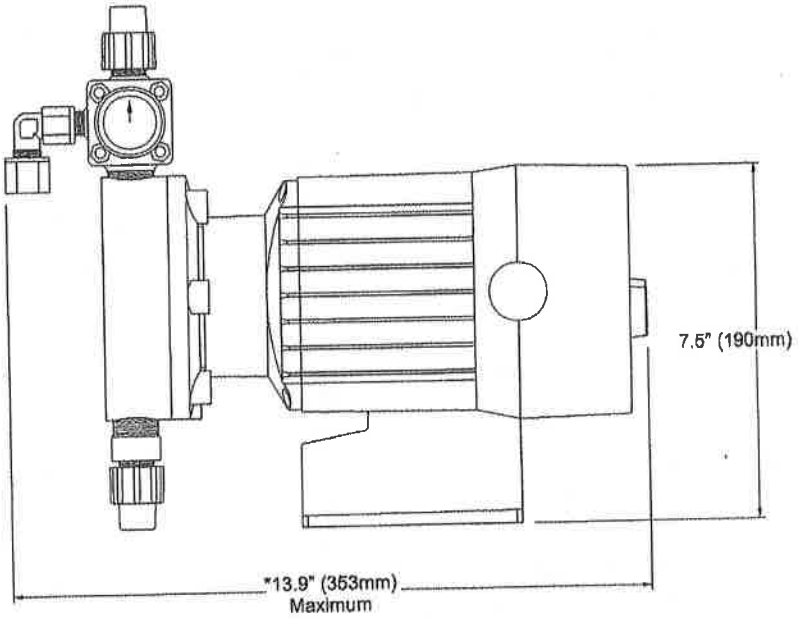

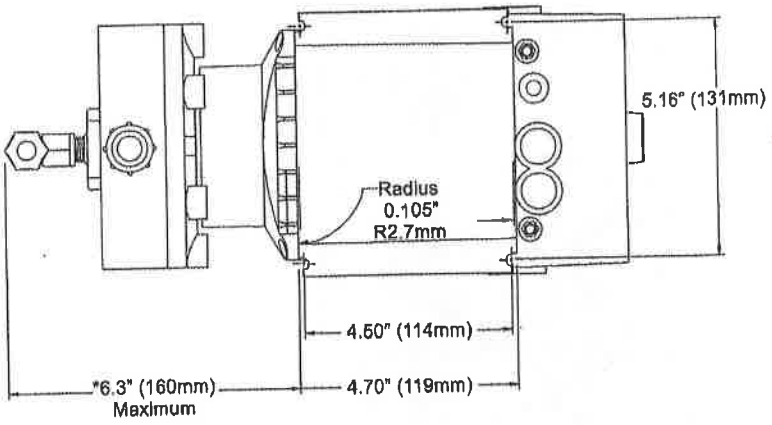

*Dimensions shown are maximum for largest liquid end available. These dimensions vary depending on the liquid end selected.

© 2005 LMI Milton Roy - All Rights Reserved
Printed in USA
Specifications subject to change without notice.

Polypro is a registered trademark of Liquid Metronics Incorporated
Liquifram is a trademark of Liquid Metronics Incorporated
Hypalon and Viton are registered trademarks of E. I. du Pont de Nemours & Co., Inc.

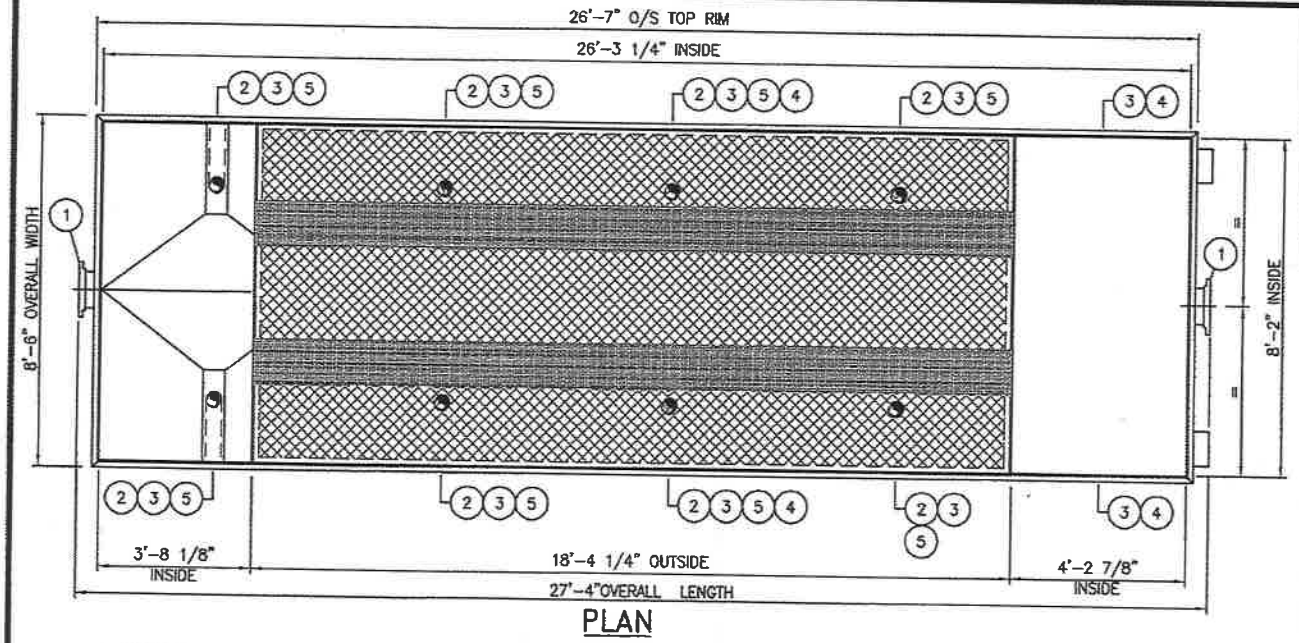

PLAN

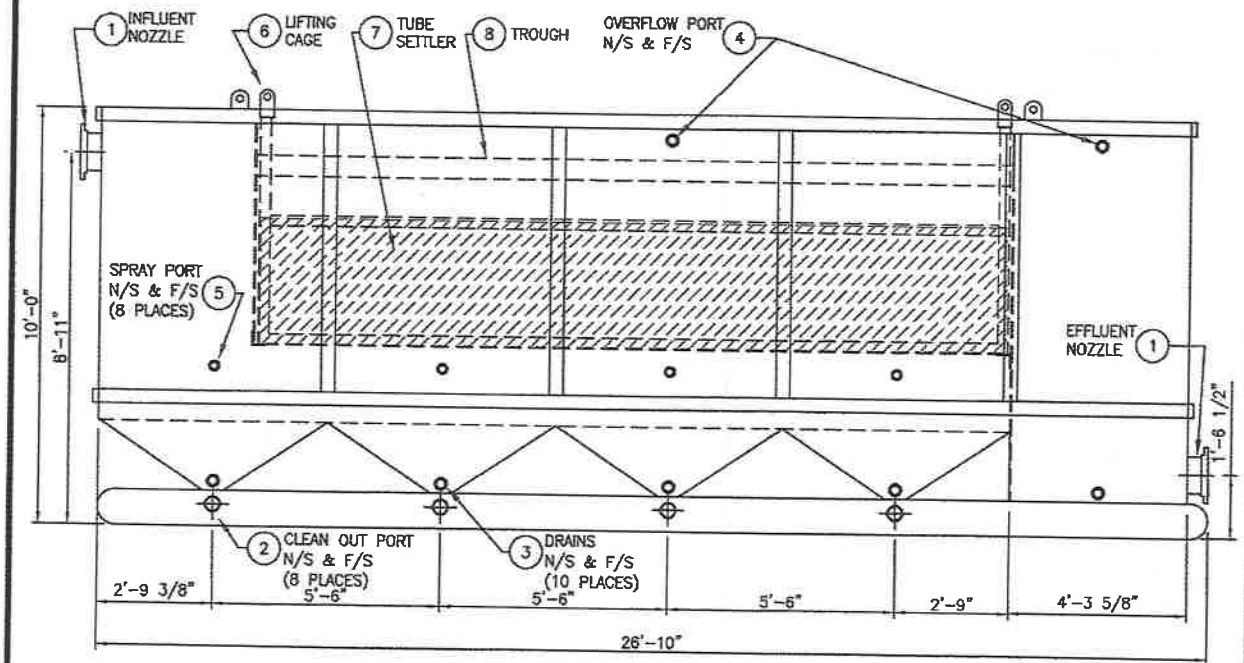

ELEVATION

#	QTY.	DESCRIPTION
1	2	INFLUENT/EFFLUENT NOZZLE W/ 10" 150LB FLG.
2	8	CLEAN OUT PORT W/ 4" NPT PIPE
3	8	DRAIN PORT, W/ 2" CUPL'G FNPT
4	4	OVERFLOW PORT, W/ 2" CUPL'G FNPT
5	8	SPRAY PORT, W/ 1" CUPL'G FNPT
6	1	PACKING REMOVAL CAGE
7	1	41 INCH DEEP TUBE SETTLER
8	2	OVERFLOWN TROUGH

GENERAL NOTES:

DESIGN DATA

- ATMATSPHERIC PRESSURE VESSEL
- TEMP. RATED @ 150 DEG. F.

- DESIGN FLOW RATE: 400 GPM
- MAXIMUM FLOW RATE: 400 GPM

MATERIAL OF CONSTRUCTION

- CARBON STEEL GRADE A36 UNLESS NOTED OTHERWISE.

SURFACE FINISH

- INTERIOR SANDBLASTED TO SSPC-SP-5 WHITE METAL FINISH AND COTED WITH POLYAMIDE EPOXY COATING BY "BENJAMIN MOORE & CO (INDUSTRIAL GRAY).

- EXTERIOR ARE PREPARED PRIOR TO PAINTING PER SSPC-SP1 (WIRE BRUSH WITH SOLVENT WIPE) AS A MINIMUM. IF RUST OR MILL SCALE IS PREVALENT, STRUCTURE WILL BE FINISHED WITH SSPC-SPC3 POWER TOOL CLEANING AND SOLVENT WIPE) PREPARATION AND COATED WITH PRIMER AND HIGH GRAD INDUSTRIAL COATING BY BENJAMIN MOORE & CO. (INDUSTRIAL BLUE) OR EQUAL.

LOADING

- VESSEL EMPTY: (to come) LBS.
- VESSEL FLOODED DURING OPERATION: (to come) LBS

NO.	REVISIONS	DATE
A	FOR INFORMATION ONLY	04/25/06

400 GPM CLARIFIER GENERAL SPECIFICATION

SCALE:	NONE	APPROVED:	DRAWN BY: TLo
DATE:	04/25/06		

GROUND/WATER TREATMENT & TECHNOLOGY
P.O. BOX 1174
DENVILLE, NJ 07834

FILE: 14-1000/C400-01 DRAWING NUMBER: SP-01

ACCU-PAC® TUBE SETTLERS

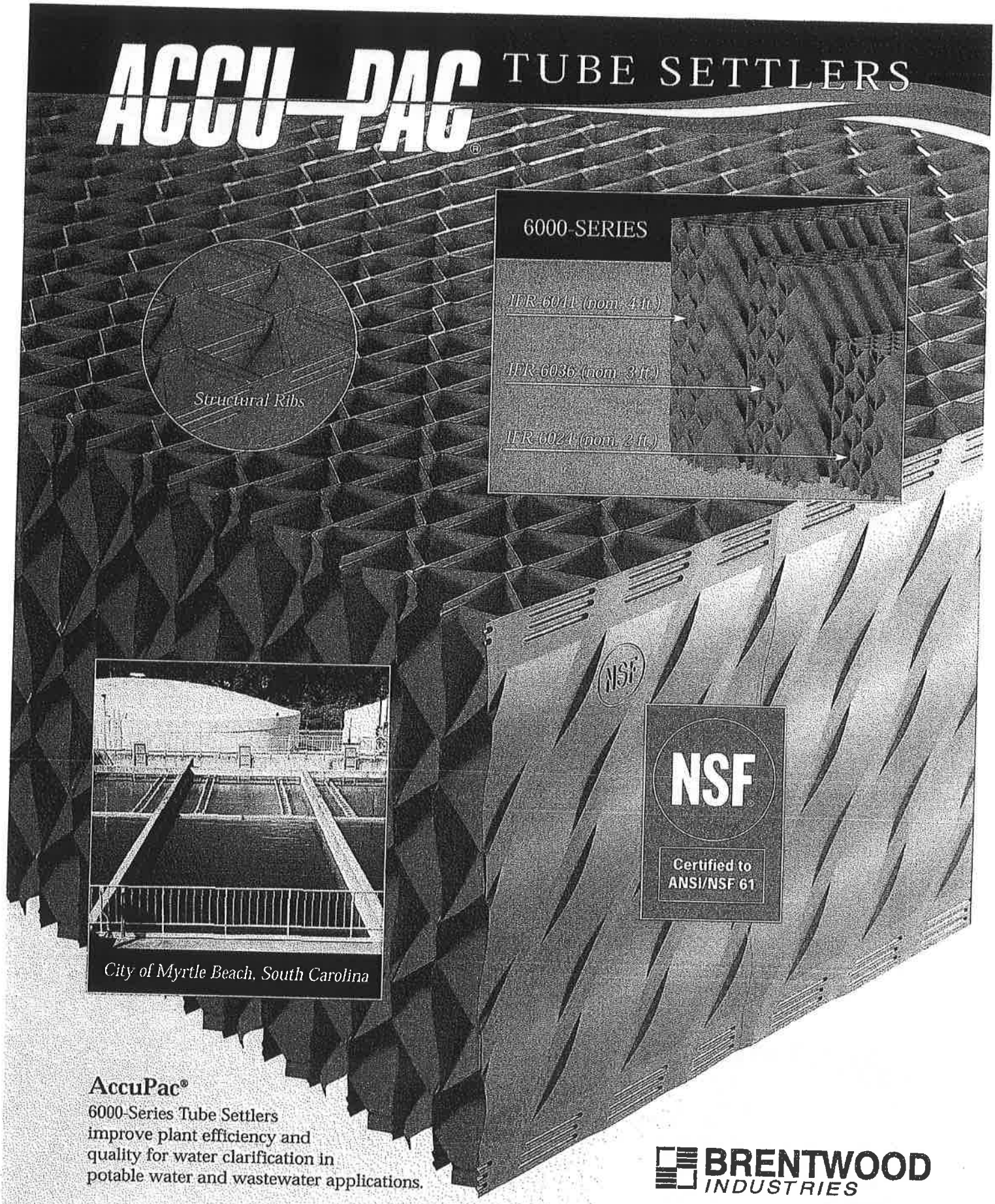

AccuPac®
6000-Series Tube Settlers
improve plant efficiency and
quality for water clarification in
potable water and wastewater applications.

BRENTWOOD INDUSTRIES

ACCU-PAC® TUBE SETTLERS

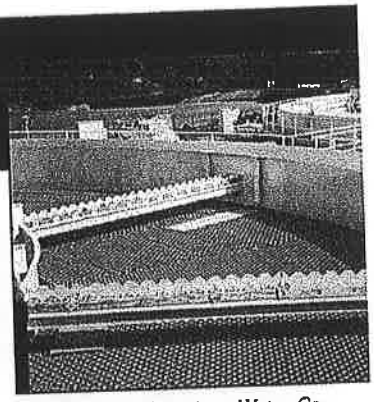

New Jersey-American Water Co.
Tinton Falls, New Jersey

AccuPac® 6000-Series Tube Settlers utilize individual, isolated tubular channels, each sloped at 60°, to expand the settling capacity of water and wastewater clarifiers. Engineered with the individual tubes rising in the same direction to eliminate mixing currents and unstable flow patterns. Constructed of flame-resistant, self-extinguishing PVC that is also inert to naturally occurring constituents in water and wastewater. Potable (blue) 6000-series modules are Tested and Certified by NSF to ANSI/NSF Standard 61.

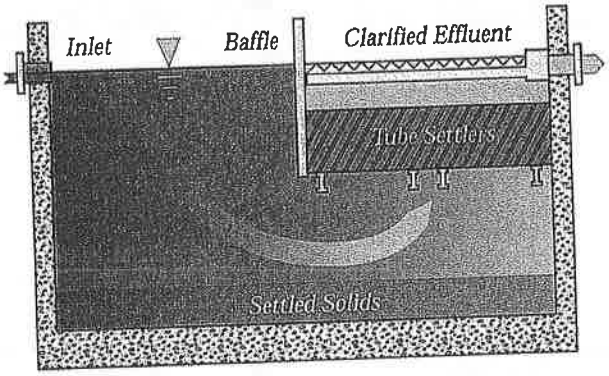

IMPROVE EFFICIENCY

The shape and configuration of 6000-series modules are engineered to minimize the Reynolds Number and to create laminar flow for rapid settling of solids. This enhanced settling reduces chemical coagulant use and downstream filter backwash requirements. For plant design and upgrading, less settling area is needed.

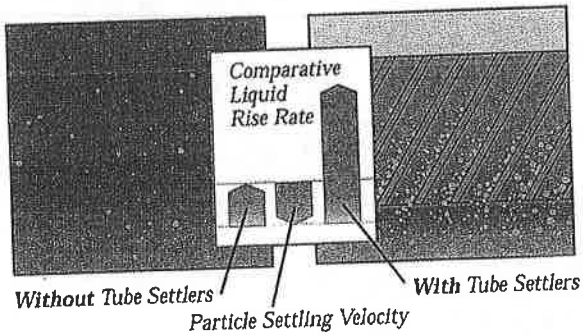

CONFIGURATIONS

For use in either circular or rectangular tanks, standard module sizes are 6, 8, 10, or 12 ft. lengths and 1 or 2 ft. widths. Other sizes available upon request. Available in both potable (blue) and non-potable (black).

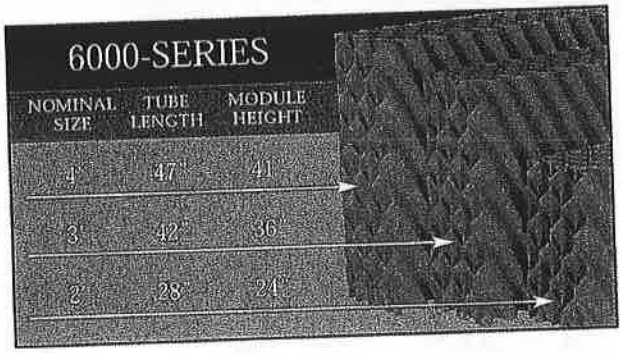

Brentwood also offers complete systems including supports, baffles, surface grating, troughs, and weirs as required for both municipal and industrial projects.

Non-metallic chain and flight sludge collection systems for rectangular clarifiers are available from our Polychem division.

NSF Certified to ANSI/NSF 61

STRUCTURAL INTEGRITY

The 6000-SeriesTube Settler modules are self-supporting and constructed of prime, rigid, UV-protected PVC. Integrated structural ribs provide substantial loading strength (maximum 250 lbs/ft²). The unique design assures a solid interface during installation. Brentwood's sheet forming and bonding processes ensure tremendous strength and long-term durability.

HIGH-TUBIDITY, HIGH RATE APPLICATIONS

3' and 4' IFR-6000 modules are particularly effective in high-turbidity, and higher rate applications

TUBE SETTLER MAXIMUM APPLICATION RATES

Flow (GPM): Required flow through the basin.

Area (FT²): Tube settler area within the basin.

Application Rate (AR): $\frac{GPM}{FT^2}$

IFR-6024 (2 ft.)	IFR-6036 (3 ft.)	IFR-6041 (4 ft.)
AR = ≤ 2.5	AR = ≤ 4.0	AR = ≤ 4.5

BRENTWOOD INDUSTRIES

Brentwood Industries, Inc.
Mailing Address P.O. Box 605, Reading, PA 19603, USA
Shipping Address 610 Morgantown Road, Reading, PA 19611
Phone 610.236.1100 *Fax* 610.736.1280
Email wwsales@brentw.com
Website www.BrentwoodProcess.com

© Brentwood Industries 2003

Printed 06/03

Tube Settler System Design

Tube Settler System design is based on these three criteria:

Flow (gpm): Required hydraulic flow capacity through the basin

Area (ft²): Plan area of tank for tube settlers.

Design Application Rate: Flow/Area (1.5 to 3.5 gpm/ft²)

Tube settlers handle maximum application rates from 2.5 to 4.5 gpm/ft². The recommended application rate for design purposes is 1.5 to 3.5 gpm/ft². This design application rate should be verified in accordance with local design standards for allowable flows, application rates, etc. Consideration of the influent water chemistry, settleability, and basin hydraulics should also play a role in selecting the proper application rate.

TUBE SETTLER	VERTICAL HEIGHT	TUBE LENGTH**	TYPICAL DESIGN APPLICATION RATE	EQUIVALENT SETTLING AREA
20"	20.00"	23.09"	1.50 gpm/ft²	10.3 ft²/ft
IFR-6024*	24.00"	27.71"	2.00 gpm/ft²***	12.3 ft²/ft
30"	30.00"	34.64"	2.50 gpm/ft²	15.4 ft²/ft
IFR-6036*	36.00"	41.57"	3.00 gpm/ft²	18.5 ft²/ft
40"	40.00"	46.19"	3.50 gpm/ft²	20.5 ft²/ft
IFR-6041*	41.00"	47.34"	3.50 gpm/ft²	21.0 ft²/ft

* Brentwood Tube Settlers
** Tube length is based on an angle of 60°
*** Some states are limited by the 10 States Standards application rate of 2.0 gpm/ft²

The top of the tube settler modules should be submerged approximately 18" to 30" below the water surface. To prevent high velocities and short circuiting of tubes, the velocities through the sedimentation basin should be verified. This can be calculated by dividing the flow through the tank (ft³/s) by the cross sectional area (height x width) perpendicular to flow under the tube settler area, where the height is the distance between the bottom of the tube settlers and the basin floor.

Basin Velocity = Flow (ft³/s) /Area (ft²) ≤ 0.05 fps

The velocities under the tube settler area generally should not be greater than 0.05 fps. To avoid problems with longitudinal velocity, either the tank width or height should be modified. If this is not feasible, consideration of decreasing the flow is an option. Note that this figure is a general guideline and, if the velocity is a concern, a more detailed hydraulic analysis should be performed. When designing the layout of tube settlers within a basin, care should be given to avoid installation near entrance areas where turbulence could impact the performance of the tubes. In a horizontal basin it is recommended that approximately one-third of the basin length should remain tube-free to act as a quiescent zone. Generally, this is easy to implement because the required area of tube settler coverage will occupy a smaller portion of the basin.

Support System Design

Tube settler module support systems should have a bearing surface of approximately 2". Bearing surfaces of more than 2" will cause blockage of the tubes that are in contact with the structural members. Supports less than 2" wide can create loading forces that could crush the modules and reduce their effectiveness. Tubular supporting structures are not recommended because they create point loads, which can severely damage the tube settlers.

The support system can be made of stainless steel, painted carbon steel, or aluminum.

Supports for the modules must be located a minimum of 1'-0" from the end of each module for modules less than 8'-0" in length and 1'-6" for modules greater than 8'-0" in length.

The support system must be designed with consideration of both live loads (human traffic) and dead loads (Dead loads include the weight of the PVC tube settlers, floc build-up, troughs, baffles, protective surface grating, etc.). The dry weight of PVC tube settlers is approximately 1.75 to 2.00 lbs/ft³. The support system should be designed in accordance with a maximum 8'-0" unsupported span of the tube settler. This design will support both dead and live loads with an adequate safety factor. Some manufacturers will design based on a 10'-0" unsupported span that limits operator access and can be potentially dangerous.

In rectangular tanks, the supports should span the full width of the tank. If this is not possible, intermediate support columns may be used. However, the support system should not impact any sludge-collecting device operations or other basin operations. Often concrete center columns are available for use in attachment of the tube settler support system.

Circular clarifiers can use supports that span from the outside diameter to the center well, creating pie shape tube settler areas. If complete coverage is not required for circular clarifiers, cantilevered support frames can be attached to the outer wall to provide the required coverage area.

Trough Design

Troughs and weirs for the tube settler system must be designed to handle peak flows and meet local regulatory requirements. Generally, a flow of 20,000 gpd per linear foot of weir (10 States Standards) is sufficient. Material of construction for troughs and weirs is commonly UV-inhibited, NSF-certified fiberglass or stainless steel. The layout of the troughs should be equally-spaced so flow distribution is realized throughout the tube settler area. A general rule of thumb is that trough spacing should not be more than four times the tube submergence.

Baffle Design

Baffles located at the tube settler/quiescent zone interface are required to direct water through the tube settlers area. They should be constructed of UV-inhibited fiberglass, PVC, or stainless steel. The design of the baffle system should be integrated with the support system.

Tube Settler Access

During basin design, consideration must be given to operator access for cleaning and for servicing of the effluent troughs/weirs, as required, within the tube settler area. Like any type of equipment, tube settlers will require periodic cleaning and maintenance and it is unreasonable to deny access for plant operators. A basin walkway design and/or a protective covering on the tube settlers should be provided to allow for a safe walking surface. A plastic or fiberglass grating is ideal because it not only allows access to the tubes, troughs, and weirs, but also adds a protective layer to the tube settlers. Any type of grating must be specifically designed not to hinder the tube settler performance and to be structurally sufficient without causing damage to the tube settlers.

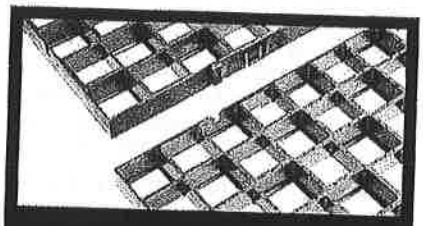

Brentwood AccuGrid® Protective Surface Grating

Brentwood has developed a unique, cost-effective means of providing additional protection to a tube settler system. Our potable-grade NSF-certified AccuGrid provides a protective layer from foot traffic and from the repeated hydraulic impact which occurs during routine wash-downs. The one-piece, interlocking panels are strong, lightweight, economical, and easy to install. AccuGrid protective surface grating will extend the useful life of the tube settlers by 2-3 times.

TUBE SETTLER DESIGN & APPLICATION

System Design Criteria

According to the technical review entitled *Tubular Settlers*[2], written by Mr. Roderick M. Willis in 1978, there are three basic requirements essential for successful performance of tube settlers.

1. There must be laminar (or viscous) flow conditions within the tubes at the maximum flow rate required. Laminar flow is essential so that each slowly-settling floc particle within a tube maintains a steady descent to the collecting surface of the tube and is not intermittently swept upward by turbulent currents within the tube.

2. The residence time within each tube must be ample so that a floc particle entering at the extreme upper edge of the tube will have sufficient time to settle to the collecting surface a vertical distance below. (Once the particle reaches the collecting surface, the coalescing tendency between particles creates a steady sludge formation).

3. The velocity of flow through the tubes must not exceed a critical maximum that would cause the settled sludge to lose stability and be swept out of the tube in the direction of normal flow. As a corollary, the volume of the tube must be ample to allow either accumulation or a continual discharge backward of all sludge, without critically changing the normal flow rate through the tube

Size, Shape, and Configuration

In addition to system design criteria, size, shape, and configuration need to be evaluated when choosing a tube settler module design. The vertical settling height within a tube should be kept as short as possible, within the restraints of cost and plugging potential, to minimize the settling distance for the particles. A V-groove base should be provided to allow for the rapid accumulation of solids into a compact mass, which slides continuously down the tube.

When selecting a tube settler, careful consideration should also be given to the vertical height of the modules. There are several different size tube settlers, each having a specific application rate. *(See chart under System Design for more info.)* Tube settlers with a vertical height of 24" and a tube length of 28" are the most commonly used size. 3' and 4' tube heights, because of longer residence time, are advantageous in many applications as well, such as high flow/high turbidity applications and where existing basins need improved settling capabilities to increase the plants total capacity.

Tube settlers manufactured with the tubes aligned in the same direction avoid the formation of crossing points that crossflow tubes promote. Many manufacturers compromise tube settler flow-through with "criss-crossing" tubes in order to achieve module rigidity. Crossing points can re-suspend the floc particles, affecting process performance. Tube modules that have flow in only one direction are easier to clean and have less chance for plugging, particularly where ends of modules meet.

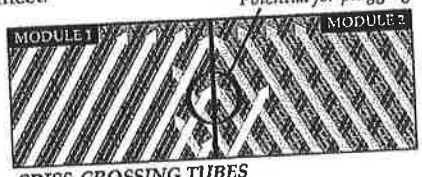

CRISS-CROSSING TUBES

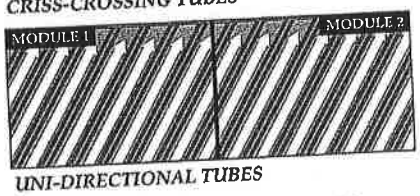

UNI-DIRECTIONAL TUBES

Also, the tube module design should incorporate features that would prevent gaps along the installed modules. These gaps allow short-circuiting of unclarified water to pass around the tube settlers. A module design which allows nesting with adjacent modules is ideal because it maximizes available area and increases the total module strength.

Tube Settlers vs. Plate Settlers

Plate settlers (Lamella Plates) are often compared to tube settlers when evaluating options for upgrading plants. They are more expensive than tube settlers because of the material of construction, and the wide plates in operation tend to be hydraulically unstable. Tube settlers eliminate crossflows and eddy currents and allow for the use of corrosion-resistant, lighter-weight PVC, resulting in a 50% cost savings. Tube settlers are a common, economically-viable alternative/solution to parallel plates (plate settlers).

Material of Construction

Tube settler modules should be constructed of evenly-spaced sheets of PVC which are solvent-welded to form a durable bond between sheets and channels. The PVC material is inert and resistant to deterioration from naturally-occurring constituents in water or wastewater.

Material and finished modules to be used for potable water treatment plant should be Certified to ANSI/NSF-61 Standard for drinking water.

NSF Certified to ANSI/NSF 61

Any material used for either water or wastewater should include an ultraviolet radiation inhibitor.

Some tube settler modules are constructed of ABS, which is a highly flammable material. A spark from welding, drilling, or a cigarette, etc. could ignite the ABS tube settlers, causing injury to personnel and damage to the tube settlers and surrounding structures.

PVC modules (unlike ABS and other materials) have a specific gravity considerably greater than water and will not float. ABS modules have a specific gravity only slightly higher than water and require a tie-down system. This results in greater costs for material and installation. A tube settler module constructed of PVC will not require any hold-down system or clips.

The mechanical properties of PVC exceed those of ABS, resulting in a more structurally sound installation. The most important mechanical property of PVC, flexural modulus, is 30% greater then that of ABS. PVC is denser, has greater tensile strength, higher impact strength, and is much less flammable then ABS.

"The Paducah WTP increased their total plant capacity by 4.0 MGD (12.0 MGD to 16.0 MGD) by replacing their existing 20" high tube settlers with new, extended tube settlers having a vertical height of 36". This allowed the plant to meet the increased demand without building a new settling basin, saving the City of Paducah hundreds of thousands of dollars."

Comparison of Physical and Mechanical Properties of PVC and ABS

PROPERTY	TEST METHOD	PVC	ABS
Specific Gravity	D792	1.45 gram/cm³ max.	1.06 gram/cm³ max.
Tensile Strength	D638/D882	6,000 psi min.	5,100 psi min.
Flexural Modulus	D790	425,000 psi min.	300,000 psi min.
Flexural Strength	D790	11,000 psi min.	8,500 psi min.
Impact Strength	D256	10.0 ft-lbs/in min.	6.3 ft-lbs/in min.
Heat Deflection	D648	158°F @ 264 psi min.	180°F @ 264 psi min.
Flammability	UL94	Grade Count = 22 (self-extinguishing)	Grade Count = 135 (extremely flammable)

[2] Willis, R.M. *Tubular Settlers-A Technical Review, Journal AWWA*, 331:335 (June 1978)

Tube Settlers

Tube settlers and parallel plates increase the settling capacity of circular clarifiers and/or rectangular sedimentation basins by reducing the vertical distance a floc particle must settle before agglomerating to form larger particles.

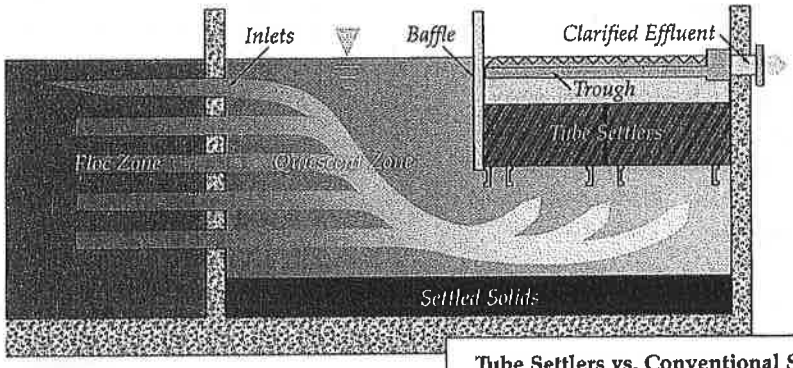

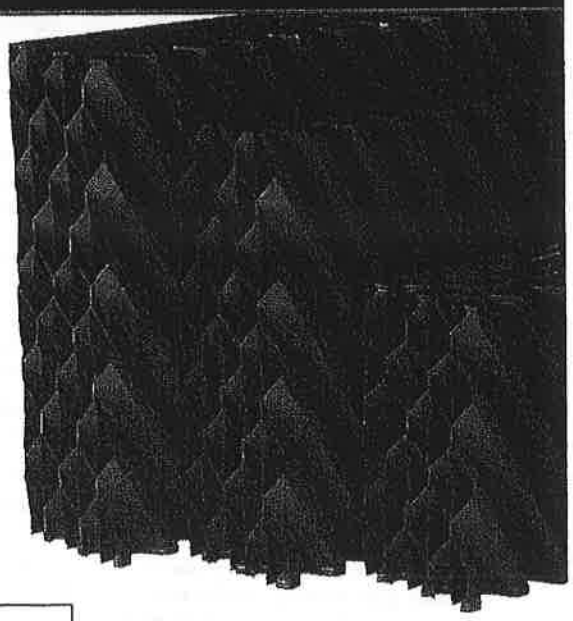

Tube settlers use multiple tubular channels sloped at an angle of 60° and adjacent to each other, which combine to form an increased effective settling area. This provides for a particle settling depth that is significantly less than the settling depth of a conventional clarifier, reducing settling times.

Tube settlers capture the settleable fine floc that escapes the clarification zone beneath the tube settlers and allows the larger floc to travel to the tank bottom in a more settleable form. The tube settler's channel collects solids into a compact mass which promotes the solids to slide down the tube channel.

Why Tube Settlers?

Tube settlers offer an inexpensive method of upgrading existing water treatment plant clarifiers and sedimentation basins to improve performance. They can also reduce the tankage/footprint required in new installations or improve the performance of existing settling basins by reducing the solids loading on downstream filters.

Made of lightweight PVC, tube settlers can be easily supported with minimal structures that often incorporate the effluent trough supports. They are available in a variety of module sizes and tube lengths to fit any tank geometry, with custom design and engineering offered by the manufacturer.

Tube Settlers vs. Conventional Settling

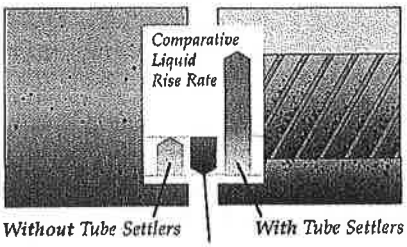

Advantages of Tube Settlers

The advantages of tube settlers can be applied to new or existing clarifiers/basins of any size:

- Clarifiers/basins equipped with tube settlers can operate at 2 to 4 times the normal rate of clarifiers/basins without tube settlers.
- It is possible to cut coagulant dosage by up to half while maintaining a lower influent turbidity to the treatment plant filters.
- Less filter backwashing equates to significant operating cost savings for both water and electricity.
- New installations using tube settlers can be designed smaller because of increased flow capability.

"Clarifiers equipped with tube settlers can operate at 2 to 4 times the normal rate of clarifiers without tube settlers."

- Flow of existing water treatment plants can be increased through the addition of tube settlers.
- Tube settlers increase allowable flow capacity by expanding settling capacity and increasing the solids removal rate in settling tanks.

"The City of Westminster, CO used alum as their water treatment plant flocculant. After the installation of tube settlers, they cut the alum dosage from 30 ppm to 16 ppm, and the filter influent turbidity was still decreased by 25%. Since the filter influent turbidity had decreased, this enabled a savings of over 27% water used for filter backwashing[1]."

[1] *Innovative Plant Operations Yield Bonuses, Opflow,* Vol. 6 No. 10 (Oct. 1980)

BRENTWOOD INDUSTRIES

Document 1.2 © October 2005

Water Technology Group

WHY BRENTWOOD TUBE SETTLERS?

Brentwood provides complete engineered systems, including tube settlers, supports, baffles, troughs & weirs, and protective surface grating. The advantages of a Brentwood installation are:

- **Single source responsibility.** Avoid problems with coordination of engineering, installation, and pricing of different components.
- **Save money** by purchasing an economical packaged system.
- **Exclusive products and features** like AccuGrid Protective Surface Grating and integrated structural ribs provide unique benefits to the tube settler system.
- **Extensive engineering experience** in both plastics design and water treatment technologies are utilized in every system design.

Project Customization

Brentwood tube settler modules can be "custom fit" for either rectangular or circular tanks. Standard lengths available are 6', 8', 10', or 12', with standard widths of 1' or 2'. Other sizes are available upon request.

Every tube settler system is different due to project requirements, tank configuration, etc. Please contact us to provide detailed budget pricing, schematic system layouts, and specifications for your particular system design.

Project Pricing

The following case studies are representative of Brentwood's economic performance within the water industry. The figures shown, adjusted for inflation, are from actual projects. System budget prices will vary considerably based on structural requirements and the scope of the project.

CASE STUDY #1:

IFR-6024 System vs. Plate Settler System

8 basins, 20'x52' tube settler area, Project allowed cost add for plate settler system.

Plate Settler System	Bid Cost = $1,000,000
IFR-6024 System	**Bid Cost = $400,000**

CASE STUDY #2:

Retrofit w/Tubes vs. Build New Basin

2 basins, 17'x32' tube setter area.

New Tank Cost*	Budget Cost = $300,000
IFR-6036 System	**Budget Cost = $95,100**

CASE STUDY #3:

New Tank w/o Tubes vs. w/Tubes

1 basin 20'x50' without Tubes,
1 basin 15'x30' with Tubes

Without Tubes*	Budget Cost = $375,000
IFR-6041 System	**Budget Cost = $250,000**

Does not include new inlet piping, flocculation chamber, troughs, weirs, outlet piping. Includes only site grading, excavation, concrete tank

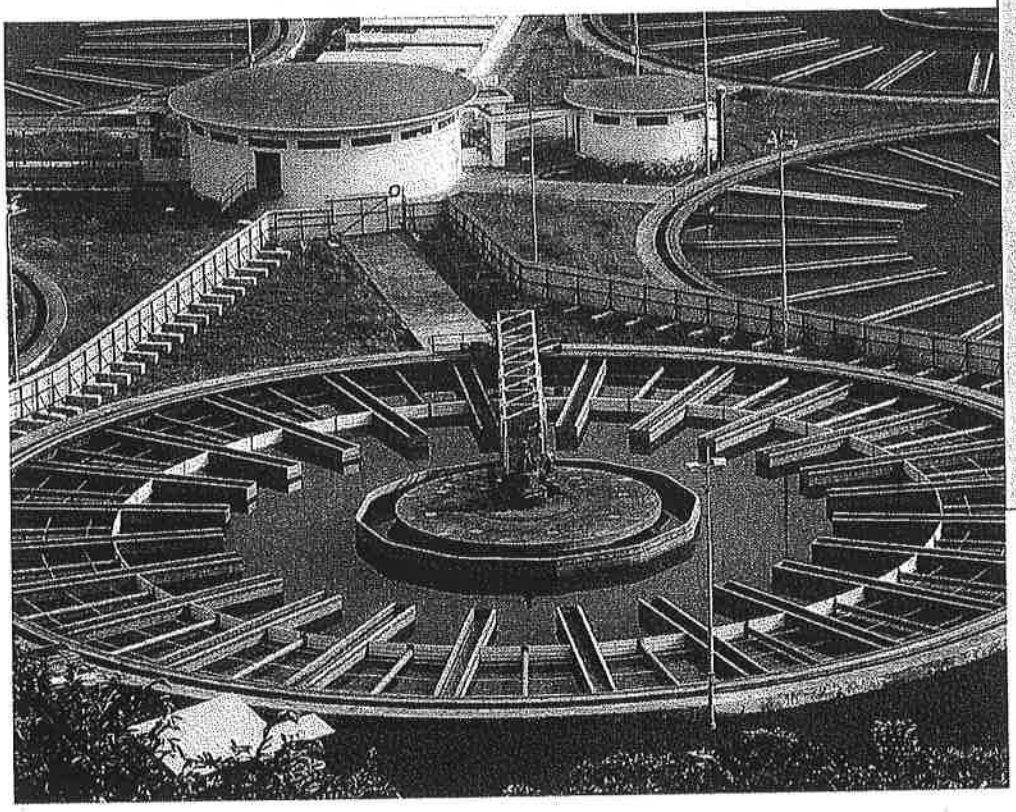

The City of Myrtle Beach Surface Water Treatment Facility has 5 settling tanks, each with an original design flow capacity of 5 MGD. Each tank is 60' wide x 120' long x 15.5' deep, divided into three 20' passes.

The sedimentation process was a major component that needed to be upgraded or expanded to increase the plant's rated capacity to meet current and future flow predictions. Enhanced settling was required because the 4-hour detention time was not being met at 30 MGD. After reviewing all available options, the City of Myrtle Beach SWTF decided to purchase and install Brentwood IFR-6024 Tube Settlers in each of the 5 settling basins.

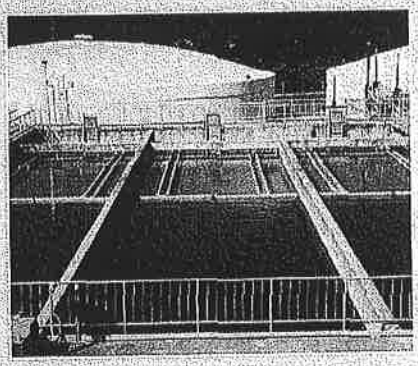

"After less than a year in operation, our Brentwood Tube Settler System:

- *Increased our flow capability (approved plant capacity) from 30 to 40 MGD*
- *Contributed significantly to historically-low settled water turbidity*
- *Reduced chemical coagulant usage*
- *Improved overall filter performance*
- *Allowed us to reduce the state Dept. of Health and Environmental Control (DHEC) mandated basin retention times from 4 hours to approximately 2.5 hours*
- *Allowed greater operating flexibility for the plant staff"*

Sam Scialdone
Plant Superintendent

BRENTWOOD INDUSTRIES

610 Morgantown Road, Reading, PA 19611
Phone 610.236.1100
Fax 610.736.1280
Email wwsales@brentw.com
Website BrentwoodProcess.com

AMT
A Subsidiary of The Gorman-Rupp Company ™

NEW FOR 2007
90° ROTATABLE BASE ON ALL MODELS

Self-Priming Diaphragm Pumps

- ***Sand Cast Aluminum Construction for Portability and Durability***
- ***Thermoplastic Rubber Diaphragm***
- ***2" to 3" NPT Suction and Discharge Sizes***
- ***1-5/8" Diameter Solids Handling Capability***
- ***Modular Component Design Permits Easy Maintenance and Cleanout***
- ***Engine Driven Models: Choice of Honda and Briggs & Stratton Gas or Yanmar Diesel Engines***
- ***Delivers up to 90 GPM***
- ***Maximum Temperature 180°F***

The AMT line of 2" and 3" Diaphragm pumps features 2-stage, 44 to 1 gear reduction with a large diameter output gear and heavy duty ball bearing construction. Often referred to as Mud Pumps or Sludge Pumps, diaphragm pumps are designed to pump mud, slurry, sewage, and thick liquids that have the ability to flow. AMT Diaphragm pumps are available with a choice of drivers to meet your application requirements: Briggs & Stratton or Honda gasoline engines, Yanmar Diesel, and 115 VAC electric motor with weatherproof cord and switch. Built-in molded polyurethane flapper/check valve assures self-priming to 20 ft. after initial prime. Heavy duty gear box is designed to operate pumps at 40 strokes per minute for Electric Motor Models and 60 strokes per minute for Engine-Driven Models. Each unit includes a 2" or 3" NPT steel suction strainer, two NPT nipples, and a wheel kit with 10" semi-pneumatic transport wheels for portability. Models 336E-K6, 336G-K6, 335G-K6, and 335E-K6, are kits provided less motor or engine. Pumps are designed for use with non-flammable liquids which are compatible with pump component materials. ***Suction and discharge port size cannot be reduced.***

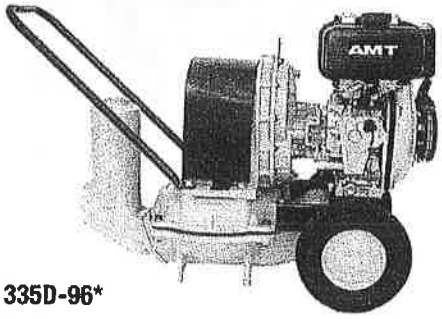

Model 335D-96*

*shown with 90° rotatable base

INDUSTRIAL DUTY

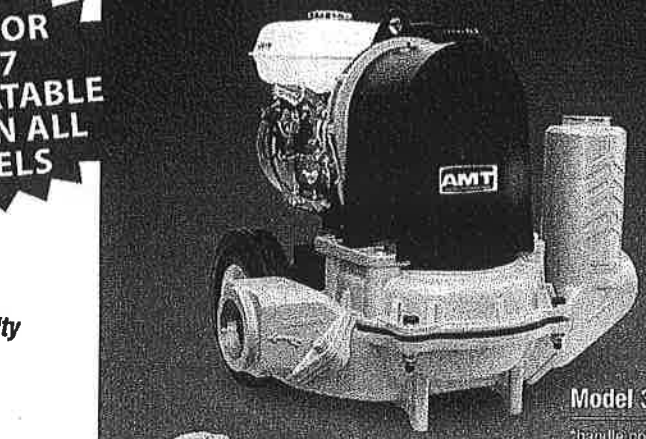

Model 335H-96*
*handle not shown

Model 335E-96

Performance of 2" Diaphragm Pumps

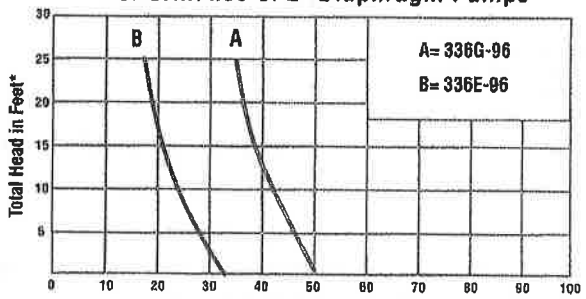

* Convert to PSI, divide by 2.31 Liquid-Water specific gravity 1.0

Performance of 3" Diaphragm Pumps

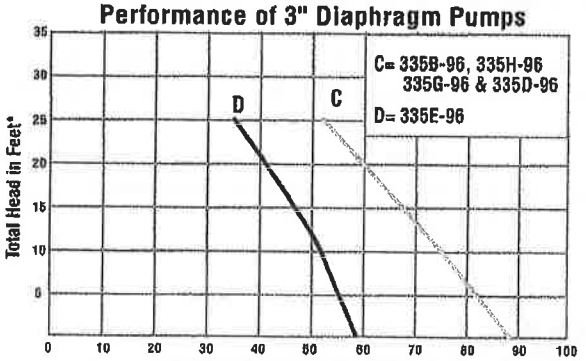

* Convert to PSI, divide by 2.31 Liquid-Water specific gravity 1.0

Diaphragm Pumps

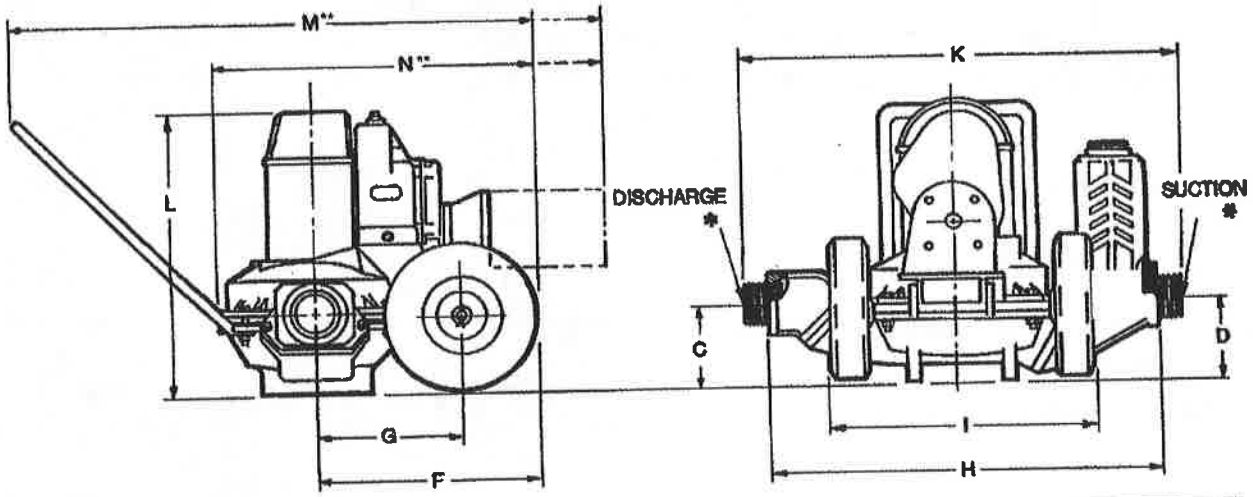

Model #	Curve	Driver	SUC*	DIS*	C	D	F	G	H	I	K	L	M**	N**	Shpg. Wt.
336G-96	A	HONDA GX120	2"	2"	7.3	5.6	17.8	12.8	22.2	18.1	25.7	23.2	39.2	25.0	125 lbs.
336E-96	B	1.5 HP Elec. Motor	2"	2"	7.3	5.6	17.8	12.8	22.2	18.1	25.7	23.2	41.1	26.8	131 lbs.
335G-96	C	HONDA GX120	3"	3"	6.2	6.3	14.5	9.5	26.5	17.9	30.0	22.0	42.0	46.0	175 lbs.
335E-96	D	1.5 HP Elec. Motor	3"	3"	6.2	6.3	14.5	9.5	26.5	17.9	30.0	22.0	43.5	27.5	186 lbs.
335B-96	C	B&S CP550	3"	3"	6.2	6.3	14.5	9.5	26.5	17.9	30.0	22.0	41.5	25.5	181 lbs.
335H-96	C	HONDA GX160	3"	3"	6.2	6.3	14.5	9.5	26.5	17.9	30.0	22.0	41.5	25.5	182 lbs.
335D-96	C	YANMAR DIESEL L48	3"	3"	6.2	6.3	14.5	9.5	26.5	17.9	30.0	22.0	43.0	27.0	203 lbs.
336G-K6	A	Kit, Less Engine	2"	2"	7.3	5.6	17.8	12.8	22.2	18.1	25.7	23.2	N/A	N/A	95 lbs.
336E-K6	B	Kit, Less Motor	2"	2"	7.3	5.6	17.8	12.8	22.2	18.1	25.7	23.2	N/A	N/A	95 lbs.
335G-K6	C	Kit, Less Engine	3"	3"	6.2	6.3	14.5	9.5	26.5	17.9	30.0	22.0	N/A	N/A	146 lbs.
335E-K6	D	Kit, Less Motor	3"	3"	6.2	6.3	14.5	9.5	26.5	17.9	30.0	22.0	N/A	N/A	146 lbs.

(*) Standard NPT (female) pipe thread.
(**) This dimension may vary due to motor or engine manufacturer's specifications.
NOTE: Dimensions have a tolerance of ±1/8".

Standard Features for AMT Diaphram Pumps

- Engine Driven Models - Choice of Honda, Briggs & Stratton Gas or Yanmar Diesel Engines
- 2" to 3" NPT Port Sizes
- Models 336E-96/335E-96 – 1.5 HP single phase, 115/230 Volt motor with manual reset overload includes 20 foot 115 VAC power cord and weather-proof on/off switch
- Models 336G-K6/335G-K6 – Kit, furnished less engine. For use with gasoline or diesel engines with .75" keyed shaft (SAE J609a Mounting Flange)
- Model 336E-K6/335E-K6 – Kit, furnished less motor. For use with electric motor (1725 RPM) or air motor with a minimum of 1.5 HP. 56C Mounting Flange required.

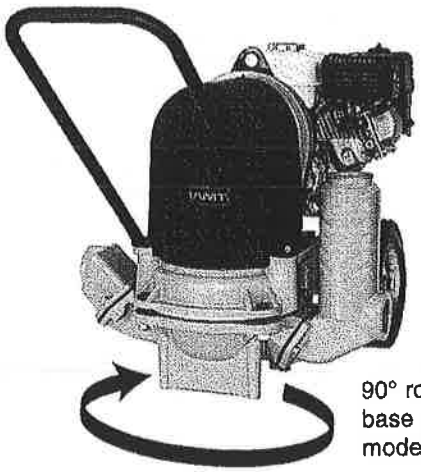

90° rotatable base on all models

OFF THE SHELF PUMPS

WARNING: Do not use in explosive atmosphere or for pumping volatile flammable liquids.

See price book page 13

The Gorman-Rupp Company reserves the right to discontinue any model or change specifications at any time without incurring any obligation.

PROPRIETARY DATA

PROPERTY OF DEN HARTOG INDUSTRIES, INC. INFORMATION FURNISHED HEREIN IS THE PROPERTY OF DEN HARTOG INDUSTRIES, INC. AND SHALL NOT BE USED, DISCLOSED TO OTHERS, OR COPIED WITHOUT THE EXPRESSED WRITTEN CONSENT OF DEN HARTOG INDUSTRIES, INC. ALL RIGHTS RESERVED.

CB2600-86 C

1. SPECIFIC GRAVITY IS 1.75
2. 1 PIECE ROTATIONALLY MOLDED
3. TRANSLUCENT
4. FDA APPROVED RESIN
5. CALIBRATED IN GALLONS
6. THREE YEAR WARRANTY
7. UV STABILIZED
8. MIXER OR PUMP MOUNT ON REQUEST

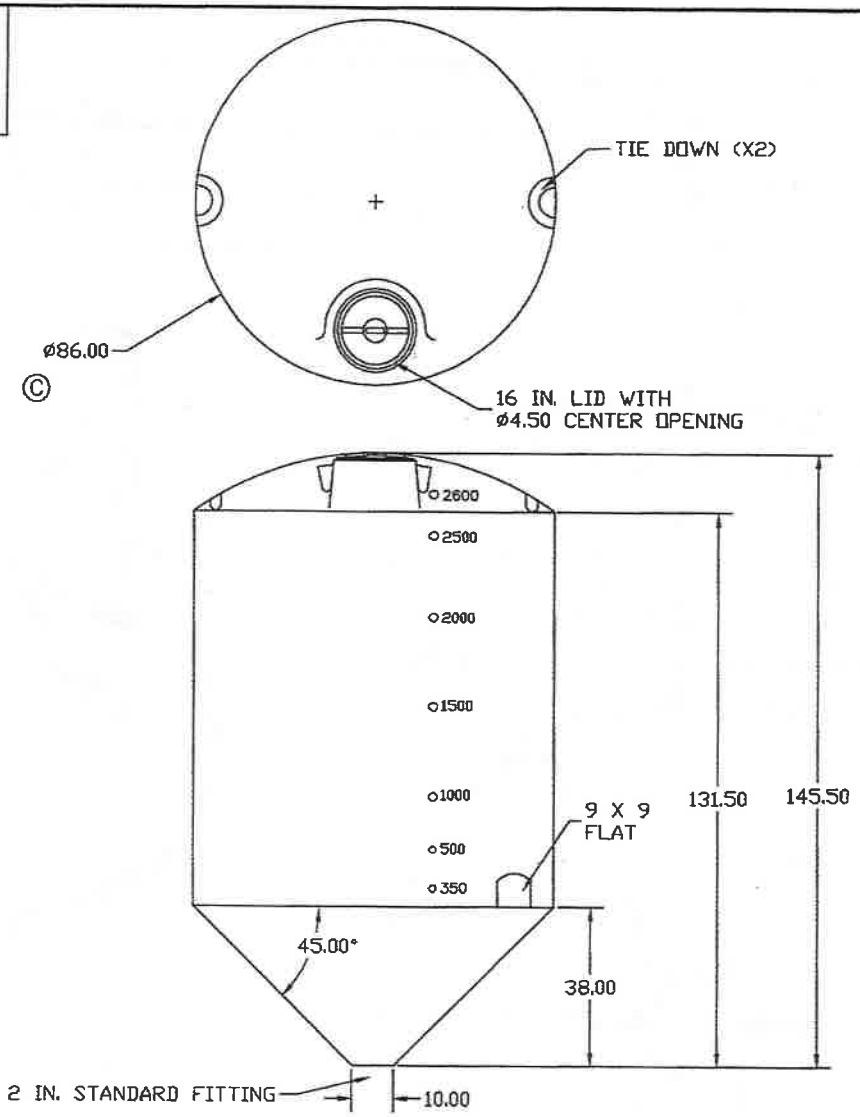

REV	DESCRIPTION	DATE	APPRD
C	DIAMETER WAS 85	7/31/06	NVE
B	UPDATED DIMENSIONS	7/13/06	NVE
A	ISOLATED TANK AND STAND	6/13/06	NVE

DRAWN / DATE
DHJ 12/9/93

APPRD. / DATE

ALL DIMENSIONS ARE IN DECIMAL INCHES
TOLERANCES UNLESS OTHERWISE SPECIFIED
± 1% @ 68° F

THIRD ANGLE PROJECTION
ANSI 14.5M

MATERIAL

HDPE OR EQUIVALENT
REFERENCE MATERIAL DATA SHEET FOR SPECIFIC PROPERTIES.

NOTES:
1. NOM. WALL @ 0.369
2. SHOT WEIGHT 500 LBS.

ACE ROTO-MOLD
A DIVISION OF DEN HARTOG INDUSTRIES, INC.
4018 HWY. 60 BLVD, BOX 421, HOSPERS, IOWA 51238

CLIENT / DESCRIPTION
2600 Gallon ø86 CONE BOTTOM TANK

SCALE
N.S.

PART NO.
CB2600-86

PROPRIETARY DATA

PROPERTY OF DEN HARTOG INDUSTRIES, INC. INFORMATION FURNISHED HEREIN IS THE PROPERTY OF DEN HARTOG INDUSTRIES, INC. AND SHALL NOT BE USED, DISCLOSED TO OTHERS, OR COPIED WITHOUT THE EXPRESSED WRITTEN CONSENT OF DEN HARTOG INDUSTRIES, INC. ALL RIGHTS RESERVED.

CB086-45ST

C

KEY	PART NUMBER	DESCRIPTION	QTY.
1	A01250X15000	1/8 X 1 1/2 ANGLE	200 IN
2	B02500X30000	1/4 X 3 FLAT	306 IN (6 @ 51)
3	B03750X20000	3/8 X 2 FLAT	288 IN (6 @ 48)
4	C03X4.1	3" CHANNEL	576 IN
5	P10000	1" PIPE	217.5 IN (6 @ 36.25)
6	S-14GA	14 GA SHEET	9999 SI, (3 @ 48 X 88)
7	SJCB86/90ST-1	12" CB RING STAND	1
8	SJCB86/90ST-7	1/4 X 4 X 4 LEG PAD	6
9	T1000X01090	1 OD X .109 TUBING	241.5 IN (6 @ 40.25)

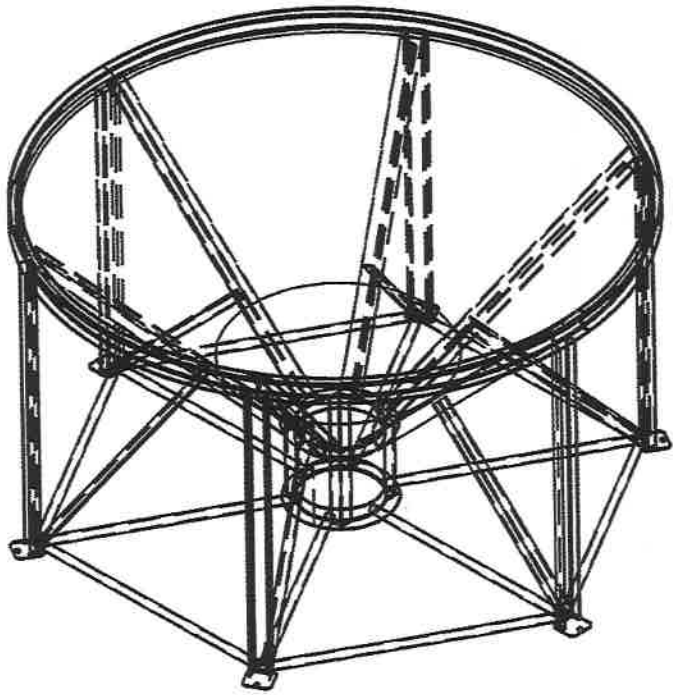

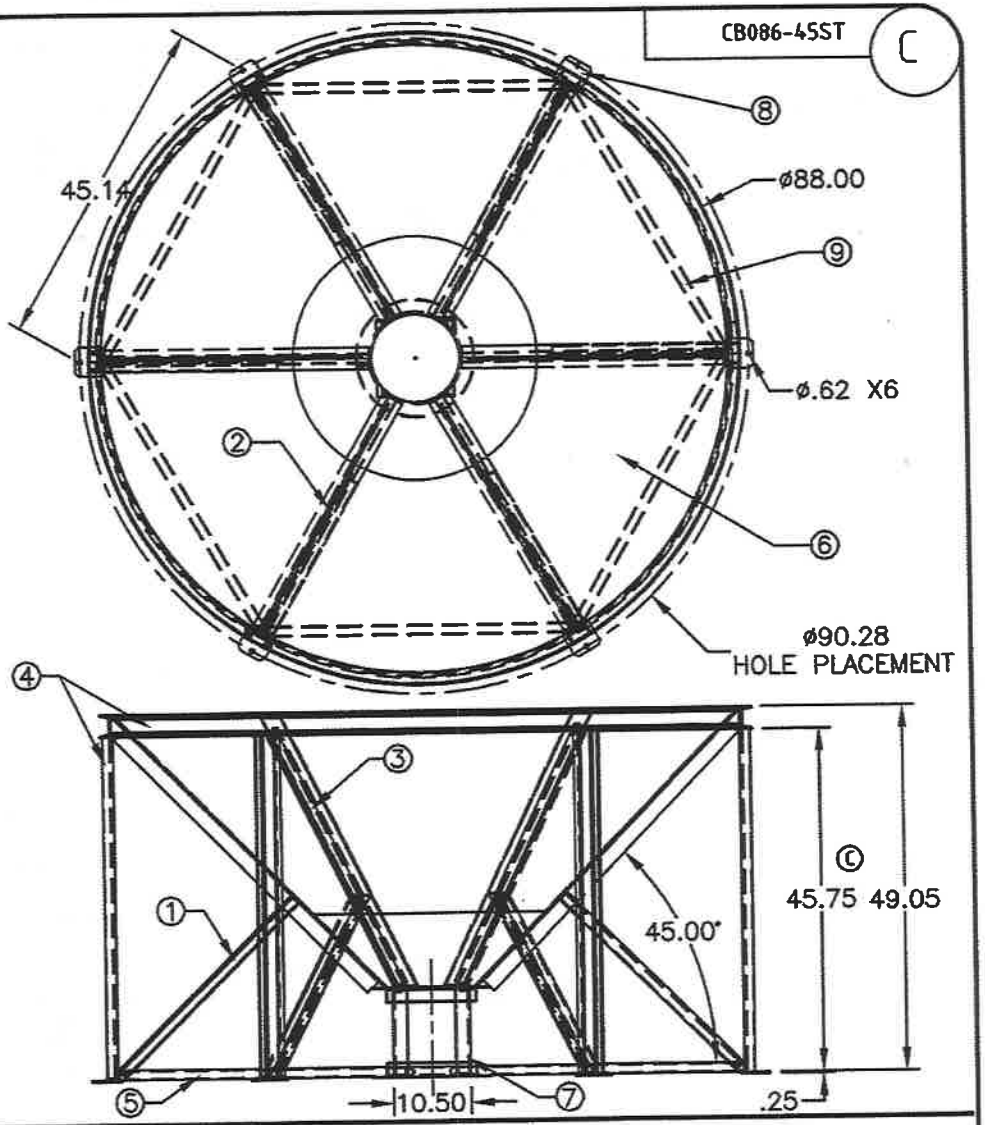

REV	DESCRIPTION	DATE	APPRD
C	WAS 46.00	12/27/06	
B	PN WAS CB085-45ST	7/31/06	NVE
A	ADDED B.O.M.	6/9/06	NVE

ALL DIMENSIONS ARE IN DECIMAL INCHES
TOLERANCES UNLESS OTHERWISE SPECIFIED
± 0.25

DRAWN / DATE: NVE 7/1/05

APPRD. / DATE: DHJ 10/14/05

THIRD ANGLE PROJECTION ANSI 14.5M

MATERIAL: MILD STEEL

NOTES:
1. POWDER COATED - BLACK COLOR
2. WEIGHT 580 LBS.

ACE ROTO-MOLD
A DIVISION OF DEN HARTOG INDUSTRIES, INC.
4010 HWY. 60 BLVD., BOX 425, HOSPERS, IOWA 51238

CLIENT / DESCRIPTION: STAND FOR ø86.00 45° CONE BOTTOM TANKS

SCALE: N.S.

PART NO.: CB086-45ST

T:\Cad Files\Revisions - STANDARD DRAWINGS\EQUIPMENT SPECIFICATION\PUMPS\ST-0048-SPC Rev-A Duplex 25 Hp Pump Skid.dwg

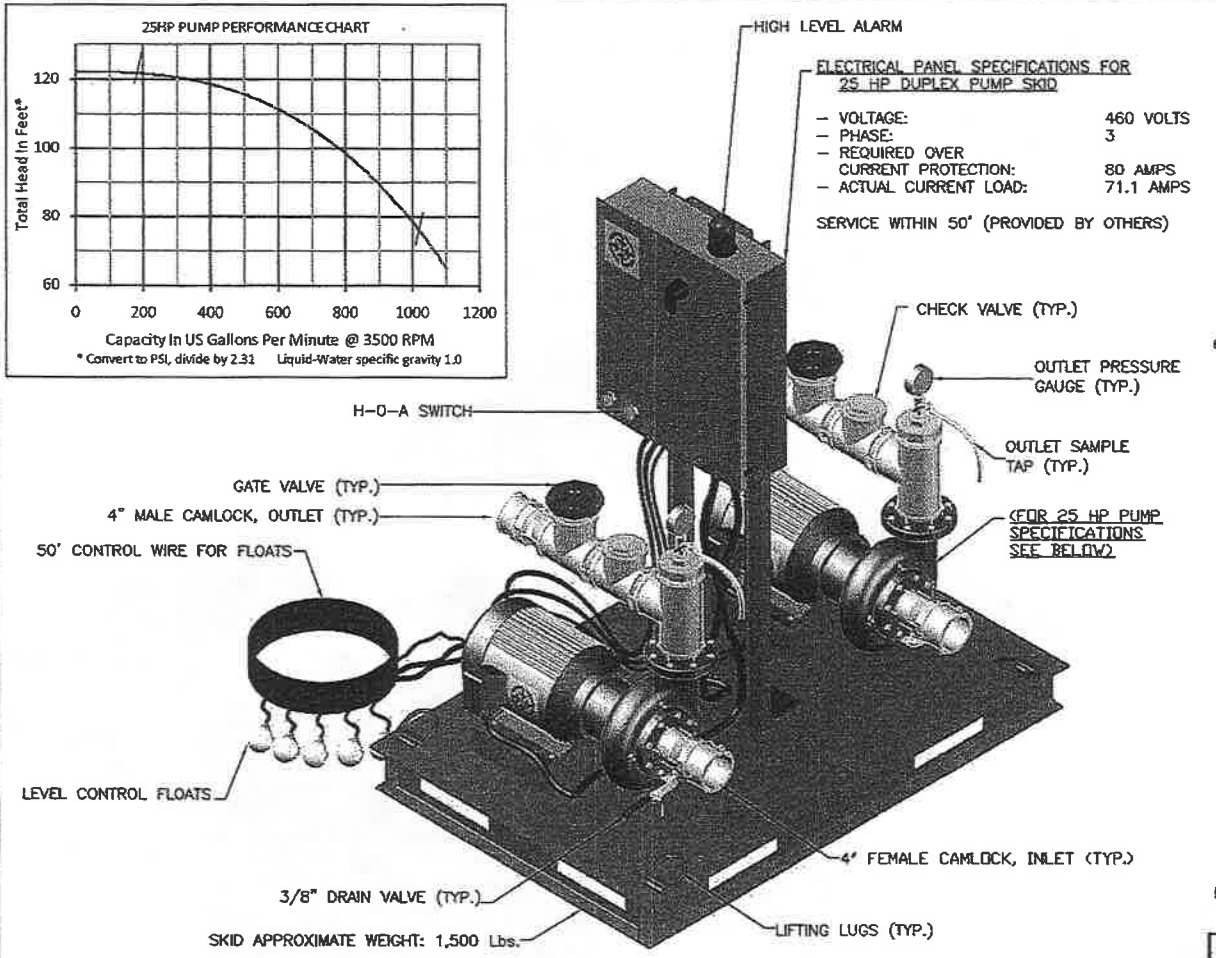

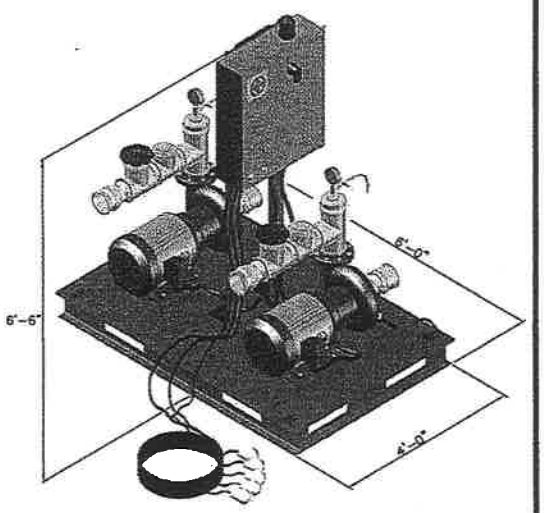

NOTE: THIS DRAWING DEPICTS A "TYPICAL" SKID.
ACTUAL DETAILS AND DIMENSIONS MAY VARY.

25 HP PUMP MECHANICAL/ELECTRICAL SPECIFICATIONS

– TYPICAL CAPACITY AND HEAD:	750 GPM @ 100' TDH
– CONSTRUCTION:	STAINLESS STEEL
– MAXIMUM HEAD:	120 ft.
– MAXIMUM FLOW:	1000 GPM
– FRAME:	256TCZ
– ENCLOSURE:	TEFC
– SUCTION:	4" FLANGE
– DISCHARGE:	4" FLANGE
– PUMP WEIGHT:	400 Lbs.
– IMPELLER DIAMETER:	6"
– DRIVER:	60 Hz 2 POLE 3500 RPM

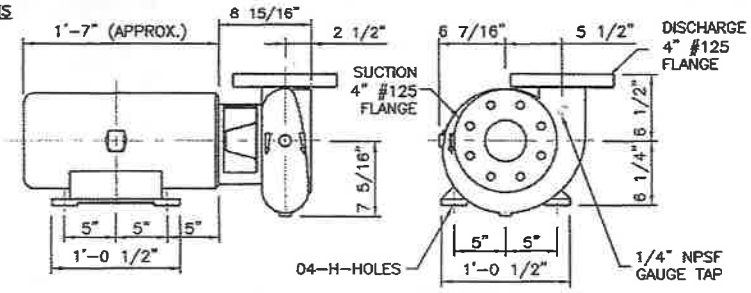

NO.	REVISIONS	DATE
A	TYPICAL	01/14/09

DUPLEX 25 Hp PUMP SKID STANDARD EQUIPMENT SPECIFICATION

SCALE: NTS	APPROVED BY: JB	DRAWN BY: AAV	
DATE: 01/14/09			

GROUND/WATER TREATMENT & TECHNOLOGY
P.O. BOX 1174
DENVILLE, NJ 07834

THIS DRAWING IS THE PROPERTY OF GROUND/WATER TREATMENT & TECHNOLOGY, INC

DWG SIZE: A	SHEET: 1 OF 1	DRAWING NUMBER: ST-0048-SPC	A

T:\Cad Files\Rentals - STANDARD DRAWINGS\EQUIPMENT SPECIFICATION\BAG FILTERS\ST-0020-SPC Rev-C Triplex Six Bag Filter Skid.dwg

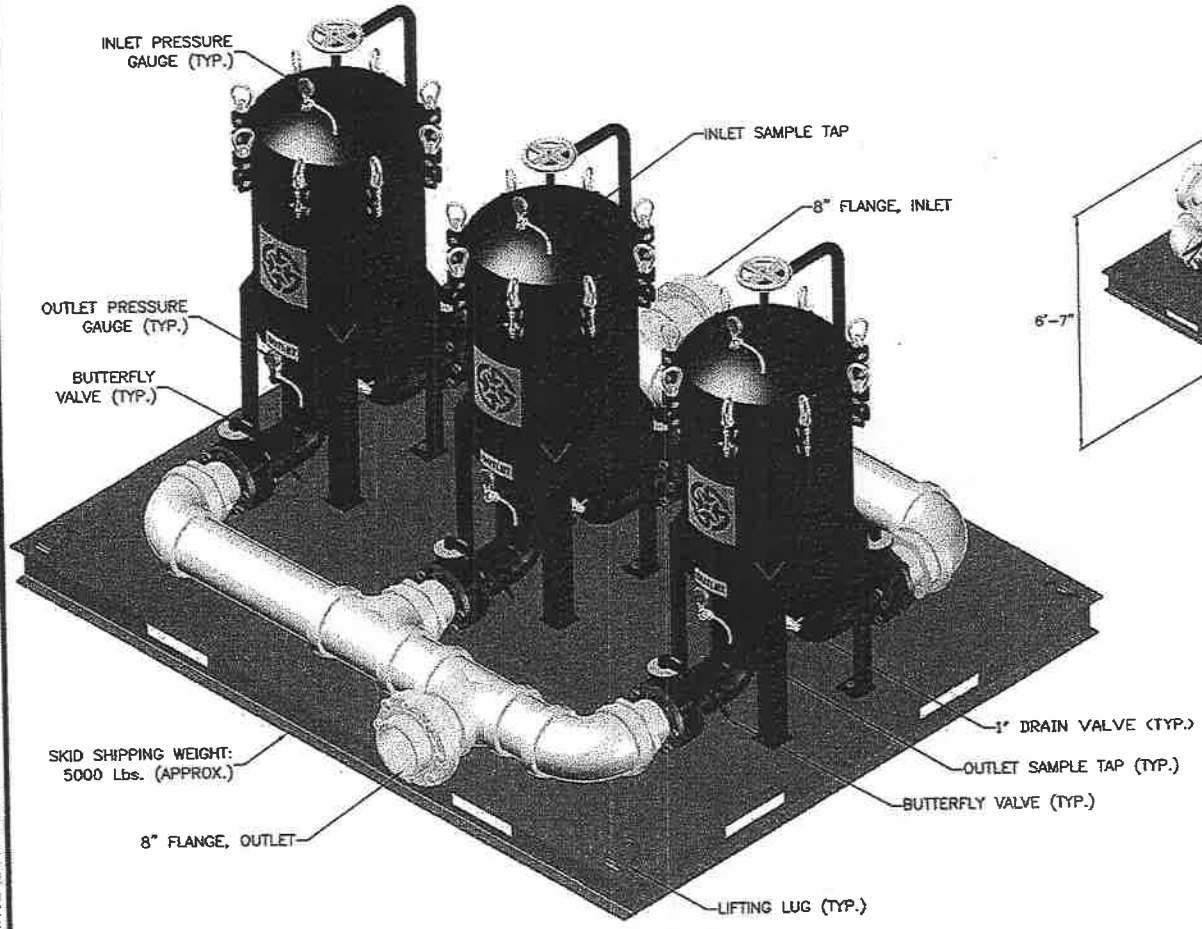

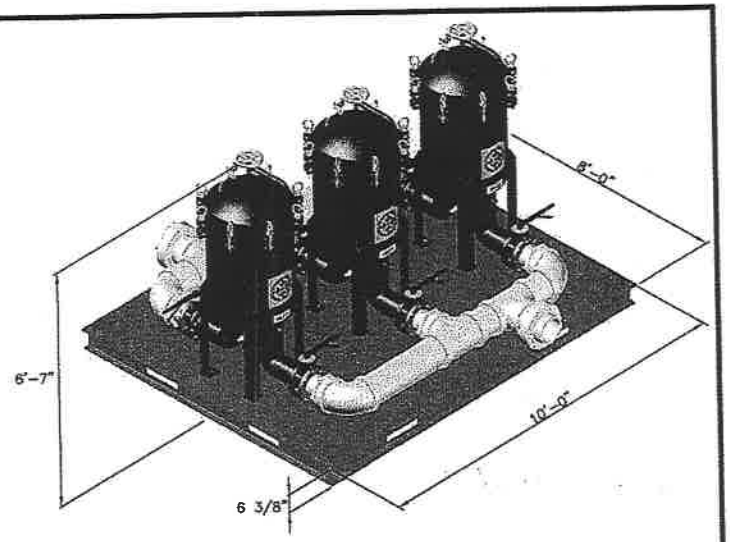

NOTE: THIS DRAWING DEPICTS A "TYPICAL" SKID. ACTUAL DETAILS AND DIMENSIONS MAY VARY.

PRESSURE DROP

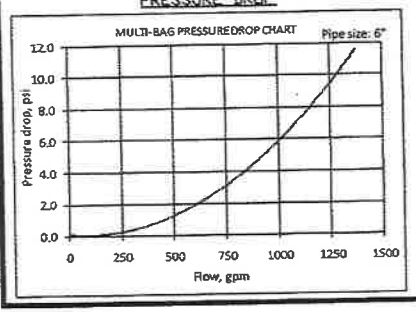

MULTI-BAG FILTER SPECIFICATIONS

- CONSTRUCTION:	CARBON STEEL
- HOUSING STYLE:	STANDARD
- NUMBER OF BASKETS:	6
- STRAINING FILTERING AREA:	26.4 SQR. FT.
- INLET/OUTLET SIZE:	6"
- NOMINAL FLOW RATE:	600
- STANDARD PRESSURE:	150 PSI
- WEIGHT (PER DRY UNIT):	750 Lbs.

BASIC DIMENSIONS

MODEL NUMBER & A: 24"
LEG BOLT CIRCLE: ø22.0"

B: 6"	C:15.0"
D: 50.7"	E: 69.7"
F: 7.00"	G: 20.1"

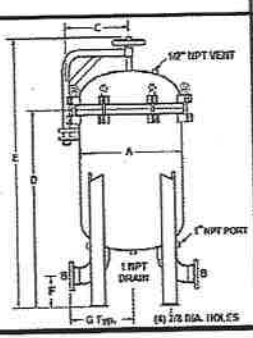

NO.	REVISIONS	DATE
C	ADDED SKID WEIGHT	02/18/09

TRIPLEX SIX BAG FILTER SKID STANDARD EQUIPMENT SPECIFICATION

SCALE: NTS	APPROVED BY: JB	DRAWN BY: AAW	
DATE: 07/17/08			

GROUND/WATER TREATMENT & TECHNOLOGY
P.O. BOX 1174
DENVILLE, NJ 07834

THIS DRAWING IS THE PROPERTY OF GROUND/WATER TREATMENT & TECHNOLOGY, INC

DWG SIZE: A	SHEET: 1 OF 1	DRAWING NUMBER: ST-0020-SPC	C

Rosedale Filter Media

Rosedale has a wide selection of filter media available to help solve your filtration problems. Our product offerings include filter bags, filter cartridges, and perforated strainer baskets. This selection features a variety of options from low-cost, disposable filter media; through high-performance filter cartridge; to cleanable stainless steel elements.

The filtration efficiency values specified in our data (see Element Performance Chart on page 123), are the indication of the filter's performance. Unlike many manufacturers, Rosedale publishes the filtration efficiency and dirt capacity of our media, providing all the information needed for an accurate sizing of a filter.

Our media is offered in standard grades and high efficiency. Standard grade refers to products which are nominally rated. This means there is no specified efficiency at the micron size but the product is interchangeable with industry standards. Rosedale high efficiency filter media is rated 95%, 99%, or 99.98% efficient at the specified micron level.

Nominal Rating	Absolute Rating (95% Efficiency)
1	35
3	35
5	48
10	55
15	65
25	70
50	90
75	110
100	110

Bag or cartridge filters are usually selected so that the clean pressure drop does not exceed 2 psi. Change-out is recommended at 15 psid (for bags), and 30 psid (for cartridges). Higher pressure drops may be tolerated when contaminant loading is low.

A more comprehensive chart on page 123 details each product group with corresponding efficiency and micron rating.

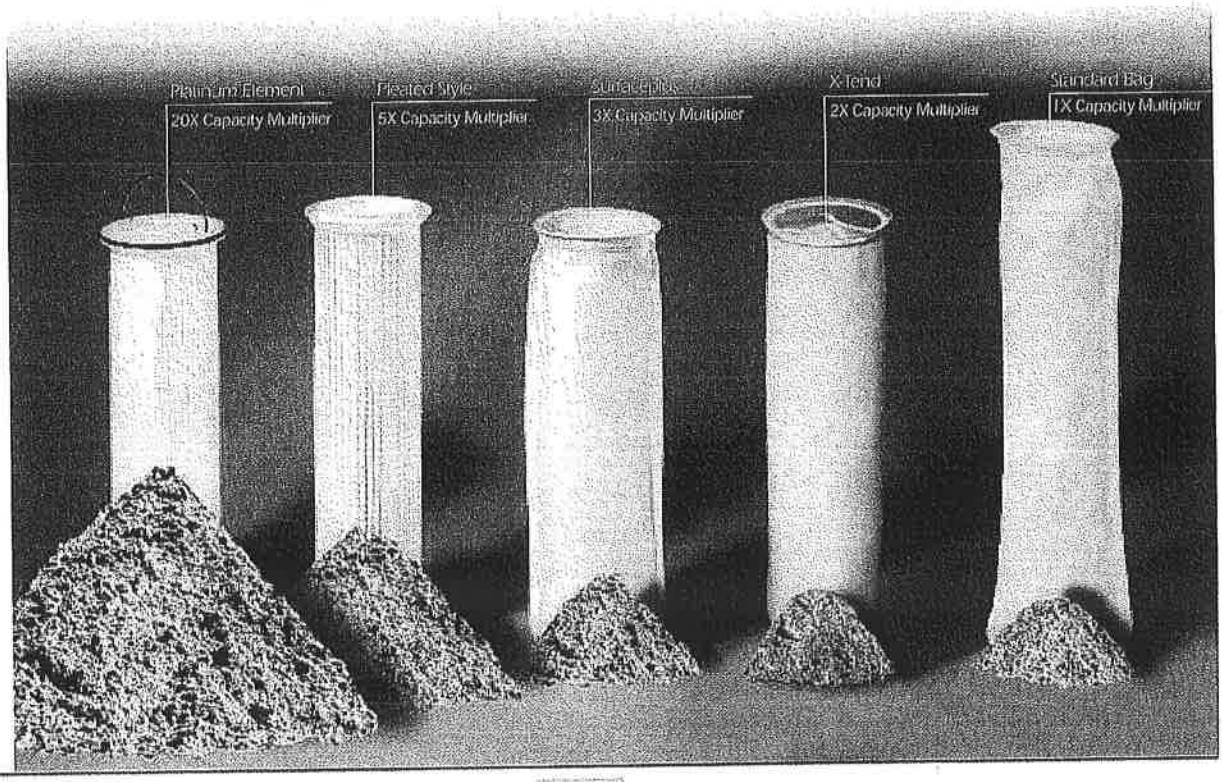

High Capacity Filter Bags for Rosedale Bag Filters

Fits All Rosedale Filter Housings

Construction

Felt Bags-Standard Grade

Felt construction is generally chosen where smaller particle retention is required, in the nominal 1 to 100 micron range. It offers higher solids loading capacity than mesh. General-purpose felt bags are offered in polyester and polypropylene materials. Special-purpose felt bags are offered in polyester and polypropylene materials. Special-purpose felt bags include high temperature service (to 500°F) bags of Nomex® nylon or Teflon®.

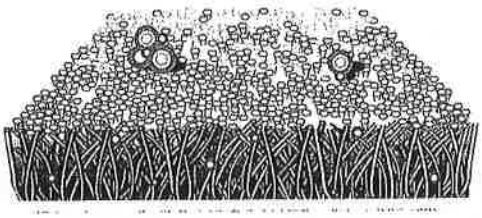

Mesh Bags

Mesh is a woven construction, generally used where micron ratings of 50 to 800 are required.

Two types are offered. The **multifilament** mesh is a low cost, disposable material offered in polyester. **Monofilament** mesh has higher strength, and is available in nylon. (It should be considered cleanable.)

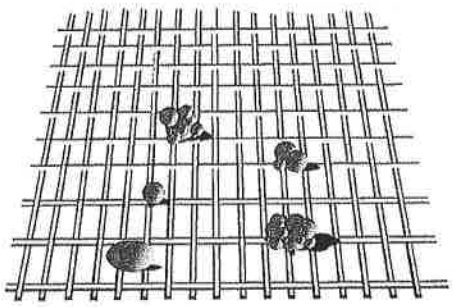

Oil Adsorption Bags

For removal of free oil, bags made of polypropylene microfibers, known as oil-adsorb, are available. A size 2 oil-adsorb bag will remove approximately a half-pound of oil from a water-oil liquid. It is only available with a 25 micron rating. If finer filtration is needed in an oil removal task, or high volume oil removal is required, Rosedale's Sorbent Containment Systems are available and information is located on page 101.

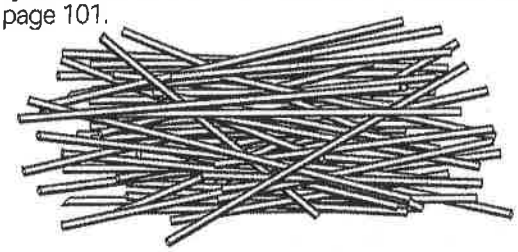

Melt Blown Media (Microfiber)

Polypropylene melt blown media offers unparalleled adsorption capacity for the removal of hydrocarbon contaminates from liquid streams. The melt blown media is also the heart of the high efficiency filter bag. The small diameter fibers create the bag's ability to remove fine particulate at high efficiencies. Fiber diameter is important because the pore size is a function of fiber diameter, density of fibers, and thickness of materials.

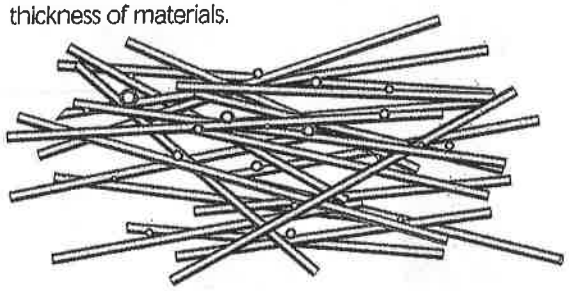

Felt Bag Finishes and Covers

Standard finish. Plain, as manufactured, without treatment or covers.

Glazed finish. The outer most surface fibers are melted by a momentary application of high heat. This bonds the fibers together and reduces the possibility of fiber migration.

Mesh covers completely encase the felt bag. This cover acts to contain any fibers that may separate from the filter bag. Materials available in mono and multifilament mesh, spun bonded nylon and polyester.

T:\Cad Files\Rentals - STANDARD DRAWINGS\EQUIPMENT SPECIFICATION\CARBON ADSORBERS\ST-0032-SPC Rev-B 10K Carbon Adsorber Unit.dwg

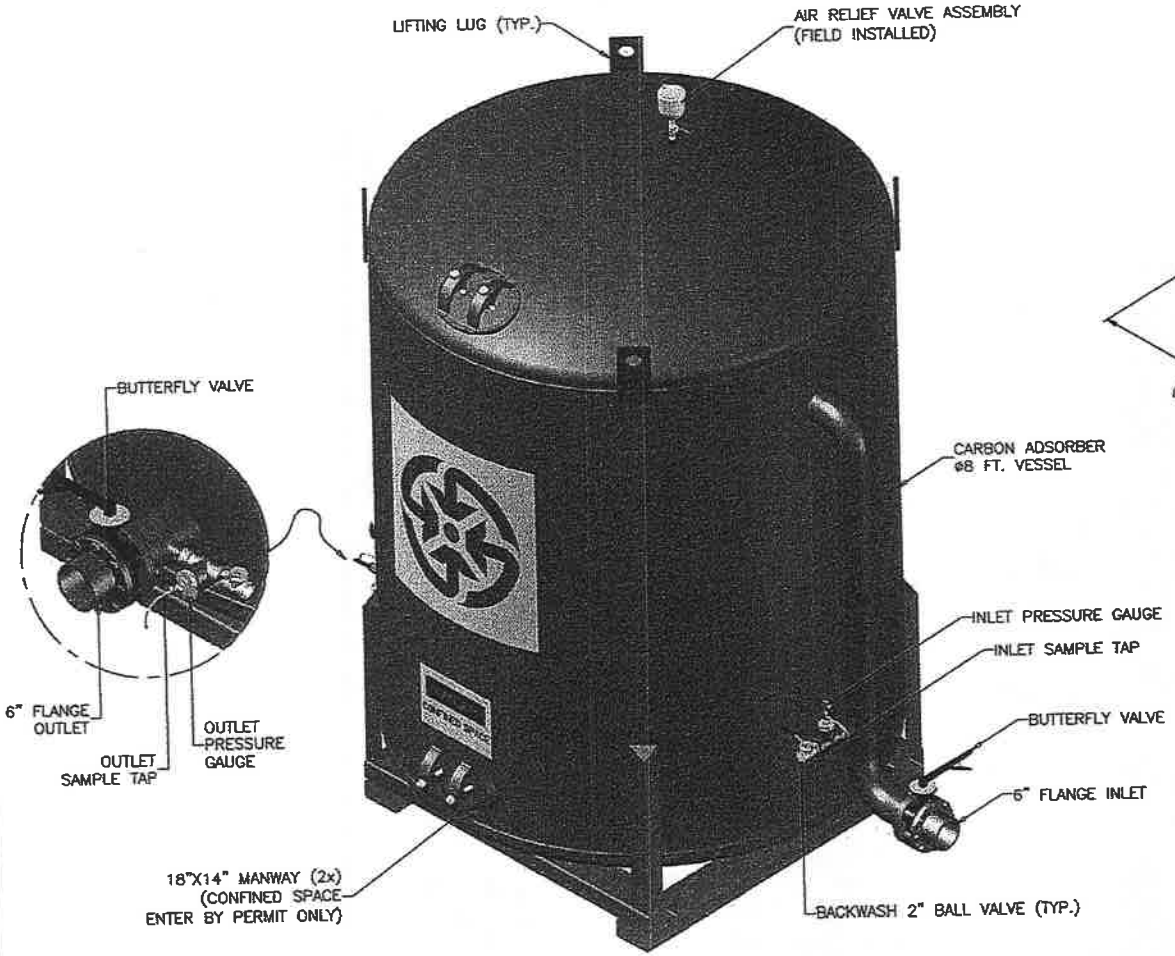

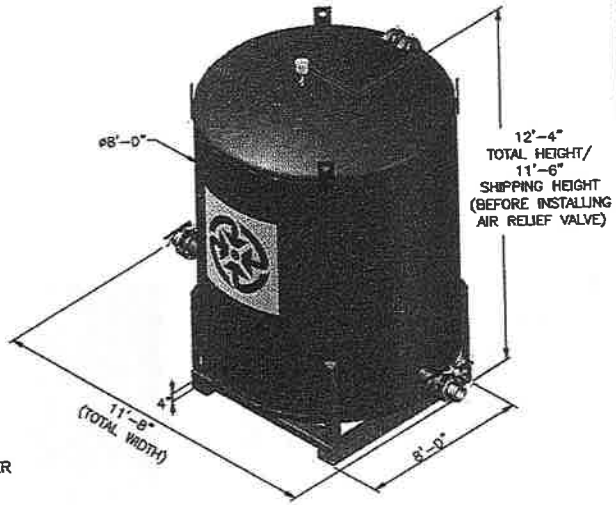

NOTE: THIS DRAWING DEPICTS A "TYPICAL" SKID. ACTUAL DETAILS AND DIMENSIONS MAY VARY.

10,000 POUNDS CARBON ADSORBER SPECIFICATIONS

– CARBON FILL:	10,000 Lbs.
– DESIGN STANDARD PRESSURE:	75 PSI
– MAX. FLOW RATE:	500/1,000 GPM
– HOUSING CONSTRUCTION:	A-36 CARBON STEEL
– INLET CONNECTION:	6" FLANGE
– OUTLET CONNECTION:	6" FLANGE
– DRAIN:	N/A
– CARBON FILL VOLUME:	350 Cu.ft.
– CARBON ADSORBER WEIGHT	
EMPTY:	5,000 Lbs.
SHIPPING (W/CARBON):	15,000 Lbs.
OPERATING:	30,000 Lbs.
– EBCT @ 500 GPM:	5.25 min.

NO.	REVISIONS	DATE
B	TYPICAL	05/26/09

10,000 Lb. CARBON ADSORBER STANDARD EQUIPMENT SPECIFICATION

SCALE: NTS	APPROVED BY: JB		DRAWN BY: AAV
DATE: 09/30/08			

GROUND/WATER TREATMENT & TECHNOLOGY
P.O. BOX 1174
DENVILLE, NJ 07834

THIS DRAWING IS THE PROPERTY OF
GROUND/WATER TREATMENT & TECHNOLOGY, INC

DWG SIZE: A	SHEET: 1 OF 1	DRAWING NUMBER: ST-0032-SPC	B

Design of Pump and Treat GAC Systems

A pump and treat scheme like the one shown in the Figure below made up of two adsorbers in series allows for the best utilization of the carbon. The adsorbers should be sized to give an empty bed contact time (EBCT) of between 5 and 15 minutes at a hydraulic surface loading of 1 to 8 gpm/ft^2. These operating parameters are important in that they can strongly influence the length of the mass transfer zone (MTZ). The length of the MTZ should be significantly shorter than the depth of carbon bed. If this is not the case rapid breakthrough of the components being controlled may occur.

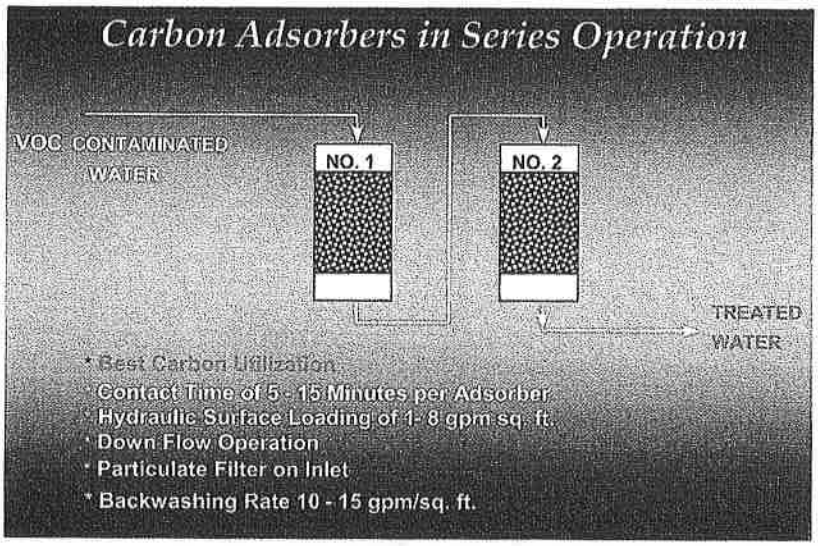

The lead adsorber in series operation is normally operated beyond the breakthrough discharge limit for the first compound needing to be controlled. This allows for more complete loading of the carbon contained in the first adsorber (reducing carbon consumption) before it is changed out with fresh carbon and the second adsorber is moved to the lead position. Under some circumstances such as low contaminant concentrations, long contact times and long expected operating cycles, adsorbers can be operated in parallel without a backup adsorber, provided the effluent from the adsorber is frequently monitored. Often the appearance of the contaminant of interest at the vessels 75% sample port is used to schedule changeout servicing. Monitoring in this manner assures breakthrough beyond acceptable limits does not occur.

The above is an excerpt from USFilter Westates Technical Dept. Los Angeles, CA, Tech Note No. 24, October 2001 "Carbon Applications for Groundwater Clean-Up" by James R. Graham, PhD., Technical Director, USFilter Westates.

DATA SHEET

USFILTER WESTATES CARBON AQUACARB® 830 AND 1240

Coal based granular activated carbon

(Formerly KG-401 and KG-502)

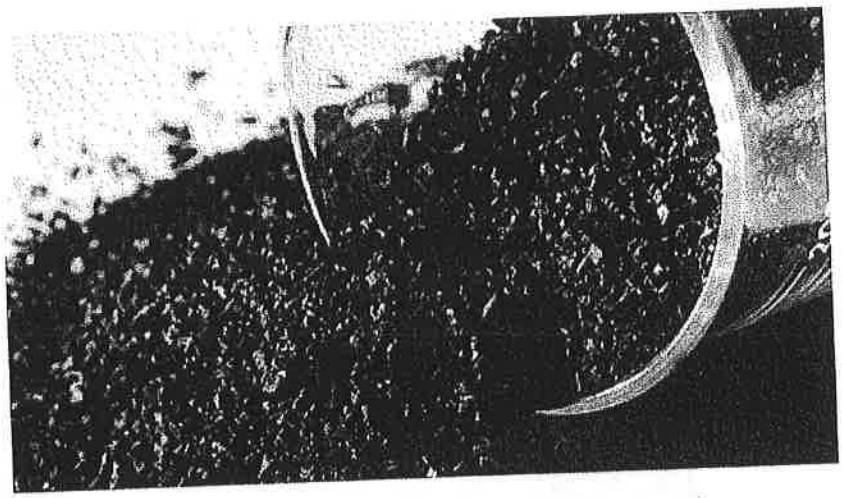

FOR MUNICIPAL, INDUSTRIAL AND REMEDIAL WATER TREATMENT

Description & Applications

AquaCarb® 830 and AquaCarb® 1240 are high activity granular activated carbons. manufactured from selected grades of bituminous coal. Manufactured by direct activation, they exhibit exceptional hardness and attrition resistance and have become a cost effective choice for use in municipal, industrial and remedial water treatment applications. These high surface area microporous carbons have been specifically developed for the removal of a broad range of organic contaminants from potable, waste and process waters.

- ANSI/NSF Standard 61 classified for use in potable water applications
- Fully conforms to physical, performance and leachability requirements established by the current ANSI/AWWA B604 (which includes the Food Chemical Codex requirements)
- A detailed quality assurance program guarantees consistent quality from lot to lot and shipment to shipment

Quality Control

All AquaCarb® activated carbons are extensively quality checked at our State of California certified environmental and carbon testing laboratory located in Los Angeles, CA. USFilter's laboratory is fully equipped to provide complete quality control analyses using ASTM standard test methods in order to assure the consistent quality of all AquaCarb® carbons.

Our technical staff offers hands-on guidance in selecting the most appropriate system, operating conditions and carbon to meet your needs. For more information, contact your nearest USFilter representative.

USFilter

DATA SHEET

AQUACARB® 830
AQUACARB® 1240

Coal based granular activated carbon

(Formerly KG-401 and KG-502)

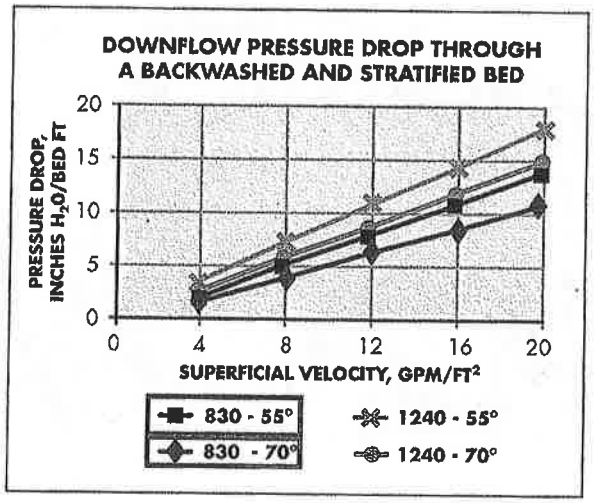

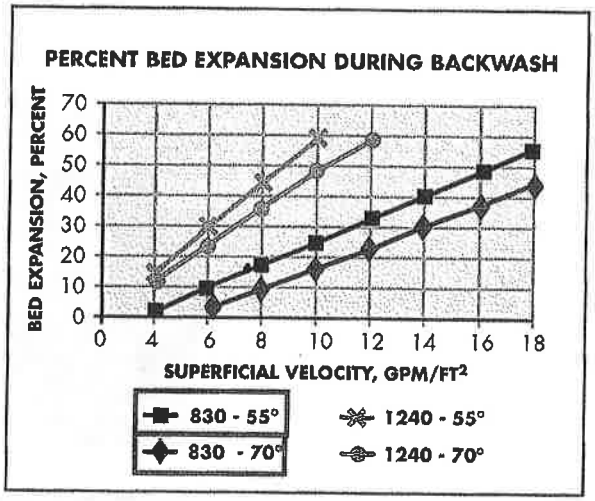

Safety Note: Wet activated carbon depletes oxygen from the air and therefore dangerously low levels of oxygen may be encountered. Whenever workers enter a vessel containing activated carbon, the vessel's oxygen content should be determined and work procedures for potentially low oxygen areas should be followed. Read Material Safety Data Sheet (MSDS) before using this product.

All information presented herein is believed reliable and in accordance with accepted engineering practices. USFilter makes no warranties as to the completeness of this information. Users are responsible for evaluating individual product suitability for specific applications. USFilter assumes no liability whatsoever for any special, indirect or consequential damages arising from the sale, resale or misuse of its products.

SPECIFICATIONS/TYPICAL PROPERTIES

Specification	AquaCarb® 830	AquaCarb® 1240
Carbon Type	Bituminous Coal	Bituminous Coal
Mesh Size, U.S. Sieve	8 x 30	12 x 40
Effective Size, mm	0.8 - 1.1	0.55 - 0.75
Uniformity Coefficient (max)	2.1	1.9
Iodine No., mgI_2/g (min.)	900	1000
Abrasion No., Wt. % (min.)	80	80
Apparent Density, g/cc	0.46 - 0.54	0.46 - 0.54

USFilter

Westates
Customer and
Technical Service Network:

Gulf Coast Region 800.659.1723
(Louisiana) 225.744.3153
Western Region 800.659.1771
Mid-Atlantic Region 800.659.1717
Midwest Region 708.345.7290
Northwest Region 800.659.1718
Southeast Region 225.744.3153
New England Region 800.659.1717

www.usfilter.com

USFilter reserves the right to change the specifications referred to in this literature at any time, without prior notice. AquaCarb is a trademark of United States Filter Corporation or its affiliates.

WS-AQ83-DS-0704

©2004 United States Filter Corporation

USFilter

WESTATES CARBON
15319 Carmenita Avenue
Santa Fe Springs, CA 90670

TOLL FREE 800.659.1771
TELEPHONE 562.229.9606
FACSIMILE 562.229.9322

CARBON SPECIFICATION

AQUACARB™ NS
(Reactivated)

ANALYSIS	SPECIFICATIONS
Type	Reactivated Bituminous Coal
PSD, U.S. Standard Mesh Size	8x30 mesh, 5% max. over, 5% max. under
Iodine Number, mgI_2/g	850 min. 950 typical
Abrasion Number, wt. %	75 min.
Moisture as Packed, wt. %	2% max.
Apparent Density, g/cc	0.46 - 0.58

T:\Cad Files\Rentals - STANDARD DRAWINGS\EQUIPMENT SPECIFICATION FLOW METERS\ST-0052-SPC Rev-A Flow Meter Assembly.dwg

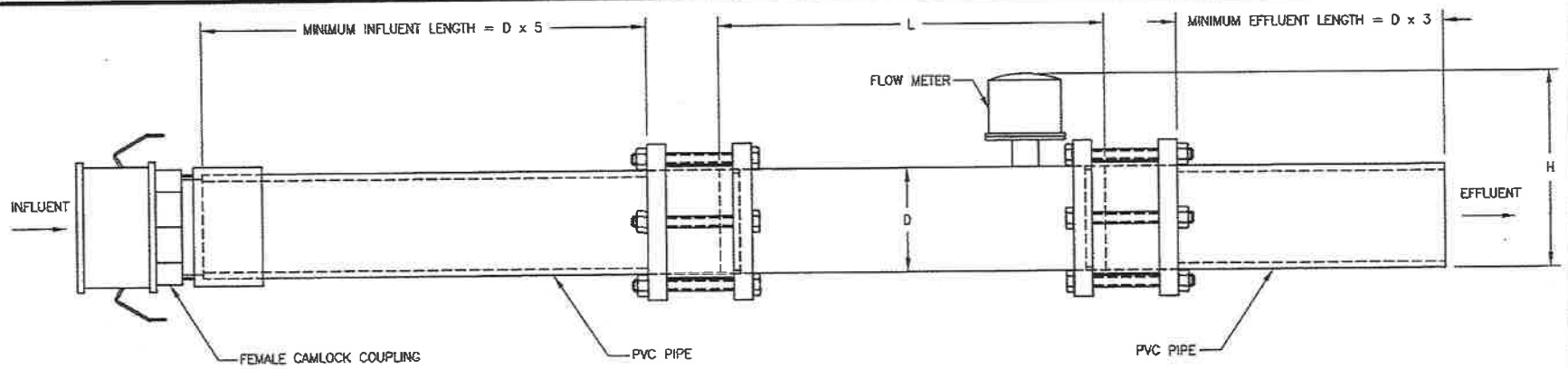

FLOW METER ASSEMBLY

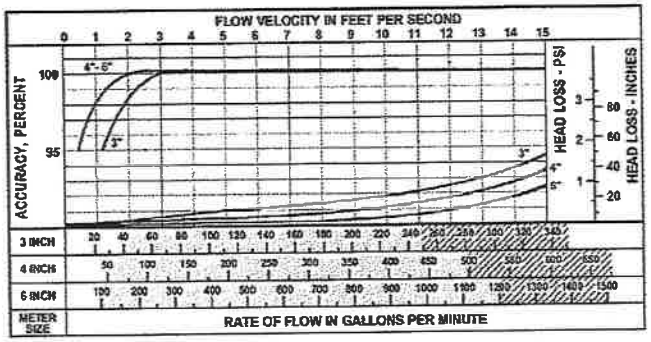

ACCURACY AND HEAD LOSS CURVES
(3"/4"/6" FLOW METERS)

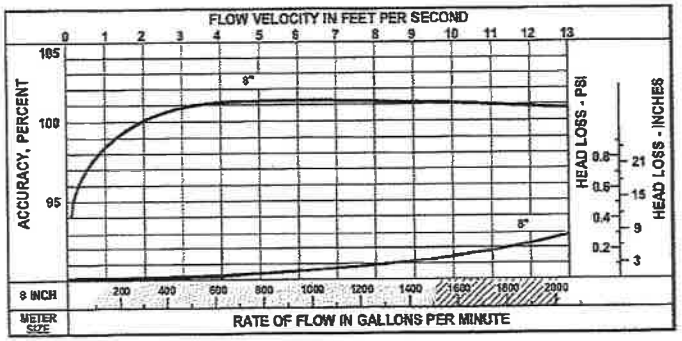

ACCURACY AND HEAD LOSS CURVES
(8" FLOW METER)

MG100 FLOW METER SPECIFICATIONS

	3	4	6	8
– METER SIZE, D (INCHES):				
– MAXIMUM FLOW U.S. GPM:	250	600	1200	1500
– MINIMUM FLOW U.S. GPM:	40	50	90	100
– HEAD LOSS IN INCHES AT MAX. FLOW:	29.50	23.00	17.00	6.75
– H (INCHES):	10.9	12.78	13.84	14.84
– L (INCHES):	13	20	20	20
– O.D. OF METER TUBE:	3.50	4.50	6.625	8.625
– MIN. INFLUENT LENGTH (INCHES):	15	20	30	40
– MIN. EFFLUENT LENGTH (INCHES):	9	12	18	24

– MAXIMUM TEMPERATURE: 160°F CONSTANT

– PRESSURE RATING: 150 PSI

NO.	REVISIONS	DATE
A	TYPICAL	01/28/09

FLOW METER ASSEMBLY STANDARD EQUIPMENT SPECIFICATION

SCALE: NTS	APPROVED BY: JB	DRAWN BY: AAV	
DATE: 01/28/09			

GROUND/WATER TREATMENT & TECHNOLOGY
P.O. BOX 1174
DENVILLE, NJ 07834

THIS DRAWING IS THE PROPERTY OF
GROUND/WATER TREATMENT & TECHNOLOGY, INC

DWG SIZE: A	SHEET: 1 OF 1	DRAWING NUMBER: ST-0052-SPC	A

MORETRENCH

....since 1931

DCA-220SSVU

From stationary standby power sources to mobile construction applications, MQ Power's WhisperWatt portable generators will meet your most demanding requiremens.

WhisperWatt generators have been engineered to provide the highest reliability and maximum motor starting capability.

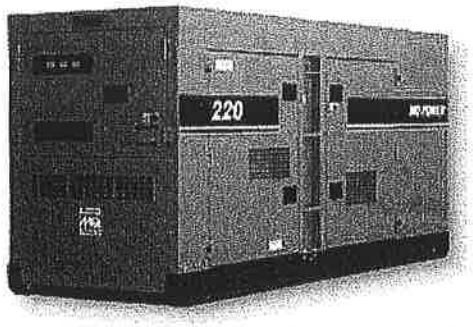

Performance Data	
Standby Output	194 kW , 242 kVA
Prime Output	176 kW , 220 kVA
Generator RPM	1800 RPMs
Generator Design	Revolving Field Self-Ventilated Dip-Proof Single Bearing
Voltage Regulation - (No Load to Full Load)	1 %
Power Factor	0.8
Armature Connection	Star with Neutral
Excitation	Brushless with AVR
No. Poles	4 Pole
Frequency	60 Hz
Available Voltages - 3 Phase	208, 220, 240, 416,440, 480 Reconnectable Volts
Available Voltages - Single Phase	120, 127, 139, 240, 254, 277 Adjustable Volts
Amps - Single Phase 120V	488.9 (4 Wire) Amps
Amps - Single Phase 240V	244.4 (4 Wire) Amps
Amps - Three Phase 240V	529 Amps
Amps - Three Phase 480V	265 Amps
Insulation	Class F
Sound Level dB(A) - Full Load at 23 feet	72 dB(A)
Power Source	
Engine Make / Model	Volvo TAD741GE
Dimensions	
Overall Length	144 in. , 365 cm
Overall Width	52 in. , 130 cm
Overall Height	69 in. , 175 cm
Approx. Net Wt. Dry	7696 lbs., 3490 kg.

Appendix C

- **System Overview**

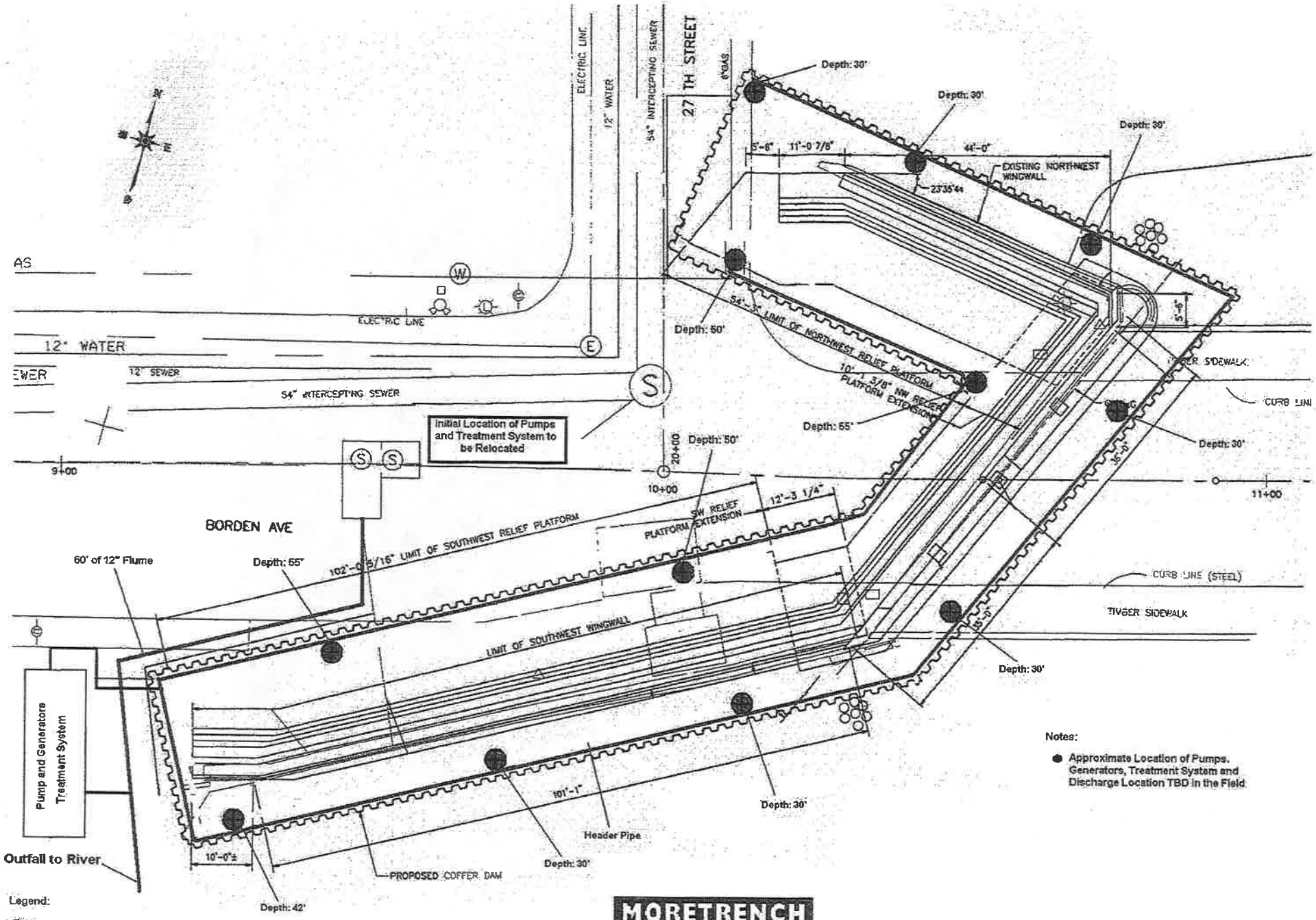

MORETRENCH

Borden Avenue
Dewatering Layout
7-9-09

MORETRENCH

....since 1931

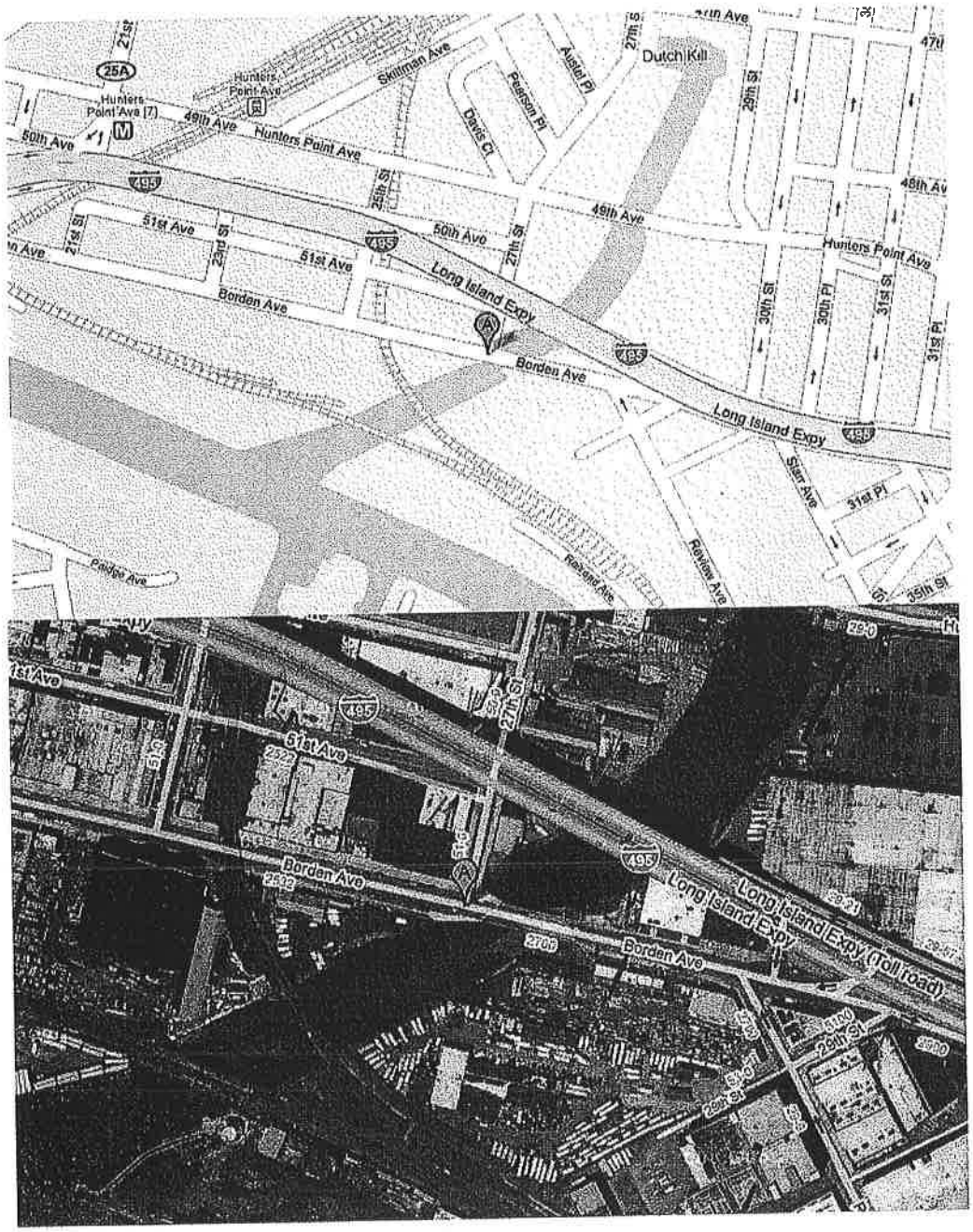

Borden Avenue Bridge
Queens, NY
7/23/09

MORETRENCH
....since 1931

- **BORED PILES & SHAFTS**
- **CUTOFF/CONTAINMENT WALLS**
- **DEWATERING**
- **GROUND FREEZING**
- **GROUNDWATER REMEDIATION**
- **INDUSTRIAL INFRASTRUCTURE**
- **LANDFILL GAS/LEACHATE SYSTEMS**
- **SOIL MODIFICATION/SOIL STABILIZATION**

Borden Avenue Bridge
Queens, NY
7/23/09

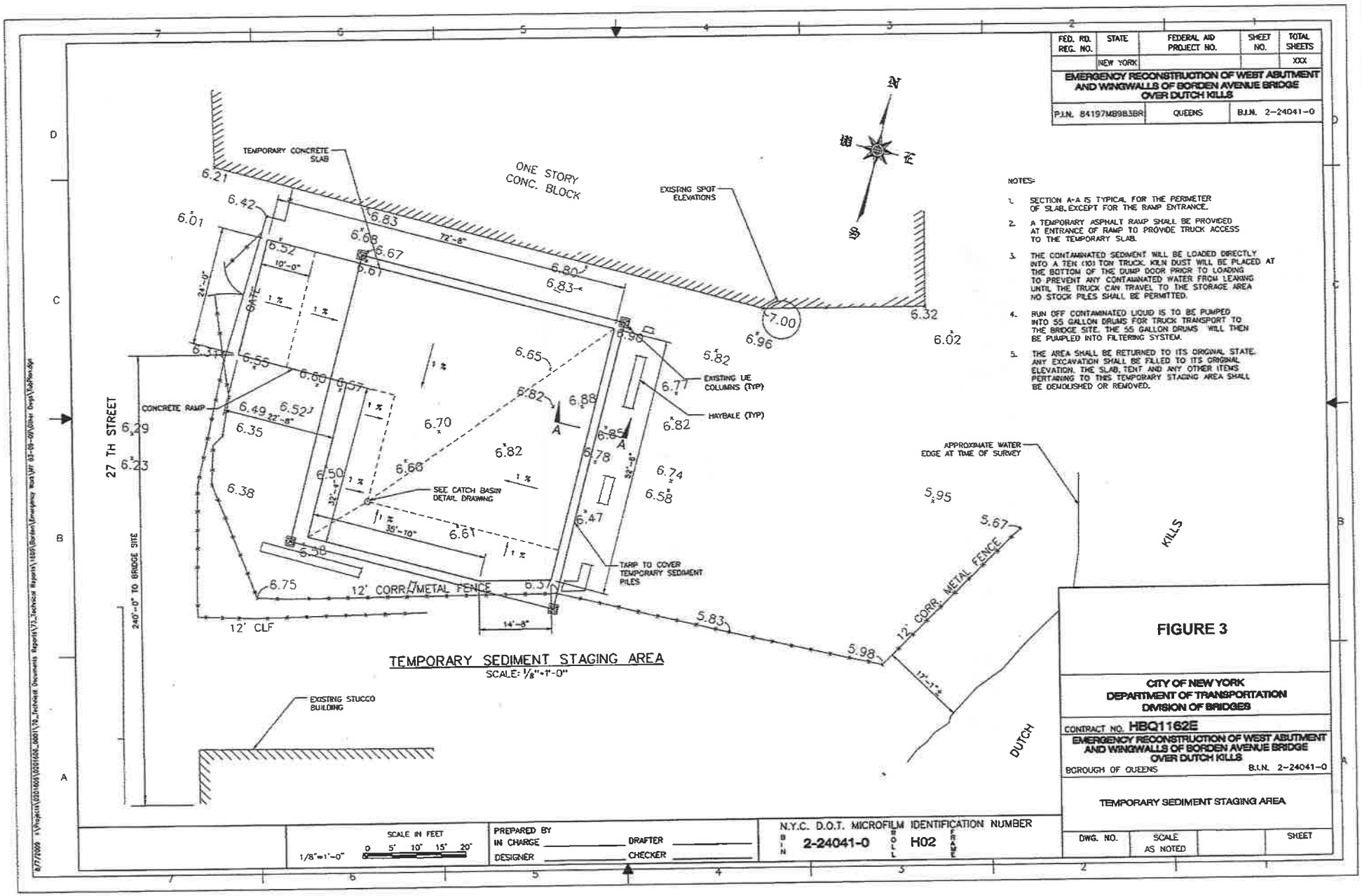

TEMPORARY SEDIMENT STAGING AREA
SCALE: 1/8"=1'-0"

NOTES:

1. SECTION A-A IS TYPICAL FOR THE PERIMETER OF SLAB, EXCEPT FOR THE RAMP ENTRANCE.
2. A TEMPORARY ASPHALT RAMP SHALL BE PROVIDED AT ENTRANCE OF RAMP TO PROVIDE TRUCK ACCESS TO THE TEMPORARY SLAB.
3. THE CONTAMINATED SEDIMENT WILL BE LOADED DIRECTLY INTO A TEN (10) TON TRUCK. KILN DUST WILL BE PLACED AT THE BOTTOM OF THE DUMP DOOR PRIOR TO LOADING TO PREVENT ANY CONTAMINATED WATER FROM LEAKING UNTIL THE TRUCK CAN TRAVEL TO THE STORAGE AREA NO STOCK PILES SHALL BE PERMITTED.
4. RUN OFF CONTAMINATED LIQUID IS TO BE PUMPED INTO 55 GALLON DRUMS FOR TRUCK TRANSPORT TO THE BRIDGE SITE. THE 55 GALLON DRUMS WILL THEN BE PUMPED INTO FILTERING SYSTEM.
5. THE AREA SHALL BE RETURNED TO ITS ORIGINAL STATE. ANY EXCAVATION SHALL BE FILLED TO ITS ORIGINAL ELEVATION. THE SLAB, TENT AND ANY OTHER ITEMS PERTAINING TO THIS TEMPORARY STAGING AREA SHALL BE DEMOLISHED OR REMOVED.

FED. RD. REG. NO.	STATE	FEDERAL AID PROJECT NO.	SHEET NO.	TOTAL SHEETS
	NEW YORK			XXX

EMERGENCY RECONSTRUCTION OF WEST ABUTMENT AND WINGWALLS OF BORDEN AVENUE BRIDGE OVER DUTCH KILLS

P.I.N. 84197MB98BR	QUEENS	B.I.N. 2-24041-0

SCALE IN FEET
1/8"=1'-0" 0 5' 10' 15' 20'

PREPARED BY
IN CHARGE _____ DRAFTER _____
DESIGNER _____ CHECKER _____

N.Y.C. D.O.T. MICROFILM IDENTIFICATION NUMBER
BIN 2-24041-0 ROLL H02 FRAME

FIGURE 3

CITY OF NEW YORK
DEPARTMENT OF TRANSPORTATION
DIVISION OF BRIDGES

CONTRACT NO. HBQ1162E

EMERGENCY RECONSTRUCTION OF WEST ABUTMENT AND WINGWALLS OF BORDEN AVENUE BRIDGE OVER DUTCH KILLS

BOROUGH OF QUEENS B.I.N. 2-24041-0

TEMPORARY SEDIMENT STAGING AREA

DWG. NO.	SCALE AS NOTED		SHEET

FED. RD. REG. NO.	STATE	FEDERAL AID PROJECT NO.	SHEET NO.	TOTAL SHEETS
	NEW YORK			XXX

EMERGENCY RECONSTRUCTION OF WEST ABUTMENT AND WINGWALLS OF BORDEN AVENUE BRIDGE OVER DUTCH KILLS

P.I.N. 84197MB983BR	QUEENS	B.I.N. 2-24041-0

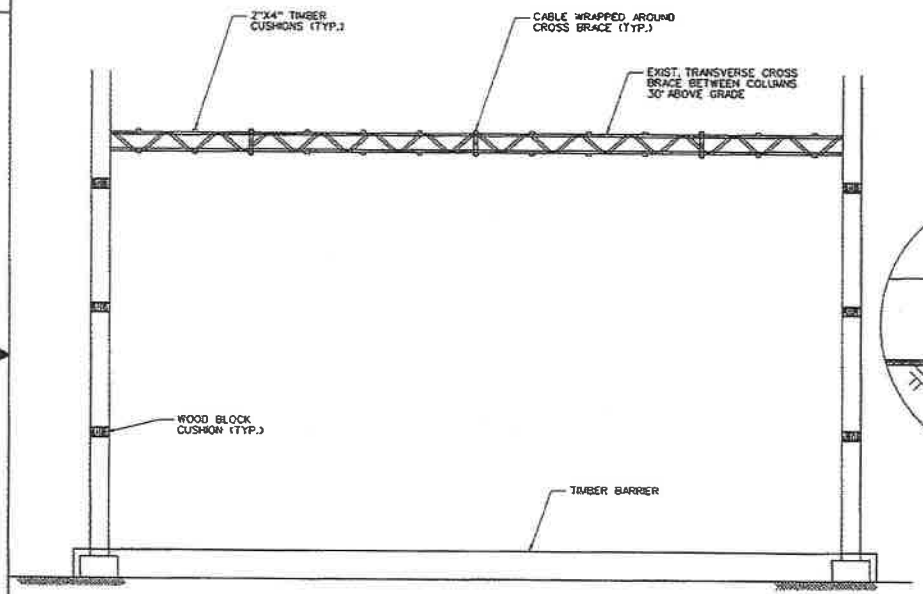

TYPICAL BENT ELEVATION
SCALE: 1/4"=1'-0"

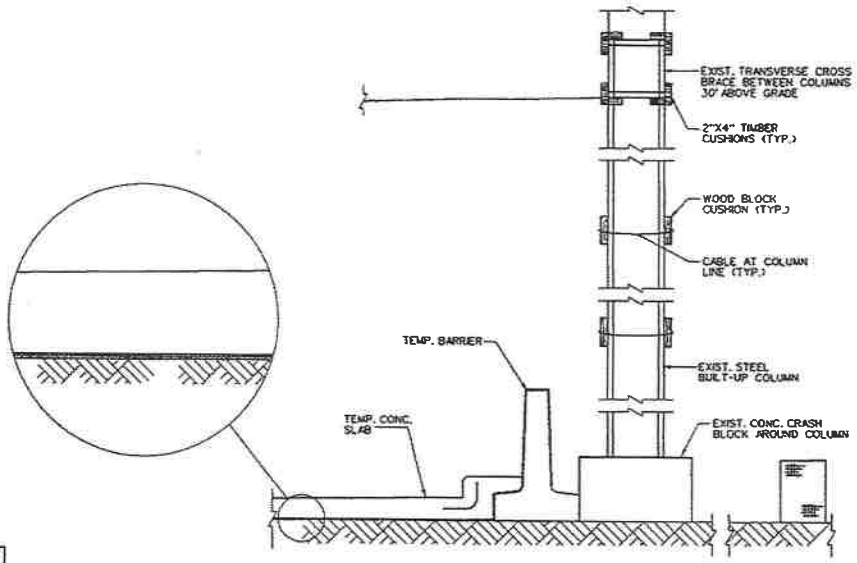

TYPICAL BENT CROSS SECTION
SCALE: 3/4"=1'-0"

FIGURE 3A

CITY OF NEW YORK
DEPARTMENT OF TRANSPORTATION
DIVISION OF BRIDGES

CONTRACT NO. HBQ1162E

EMERGENCY RECONSTRUCTION OF WEST ABUTMENT AND WINGWALLS OF BORDEN AVENUE BRIDGE OVER DUTCH KILLS

BOROUGH OF QUEENS B.I.N. 2-24041-0

TEMPORARY SEDIMENT STAGING AREA
SHEET 2

DWG. NO.	SCALE		SHEET
	AS NOTED		

PREPARED BY
IN CHARGE _____ DRAFTER _____
DESIGNER _____ CHECKER _____

N.Y.C. D.O.T. MICROFILM IDENTIFICATION NUMBER
BIN 2-24041-0 ROLL H02 FRAME

FED. RD. REG. NO.	STATE	FEDERAL AID PROJECT NO.	SHEET NO.	TOTAL SHEETS
	NEW YORK			XXX

EMERGENCY RECONSTRUCTION OF WEST ABUTMENT AND WINGWALLS OF BORDEN AVENUE BRIDGE OVER DUTCH KILLS

P.I.N. 84197MB983BR	QUEENS	B.I.N. 2-24041-0

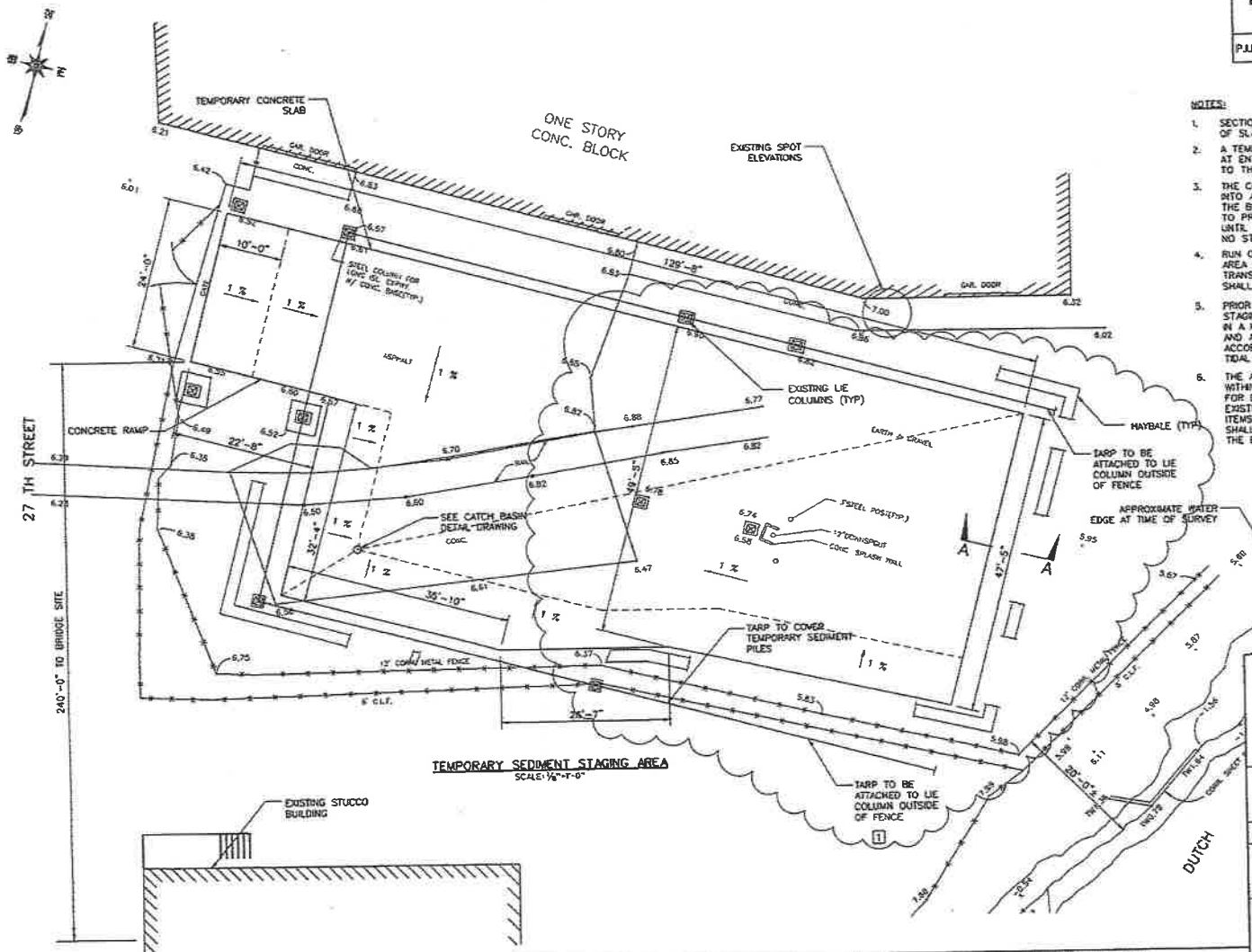

NOTES:

1. SECTION A-A IS TYPICAL FOR THE PERIMETER OF SLAB, EXCEPT FOR THE RAMP ENTRANCE.
2. A TEMPORARY ASPHALT RAMP SHALL BE PROVIDED AT ENTRANCE OF RAMP TO PROVIDE TRUCK ACCESS TO THE TEMPORARY SLAB.
3. THE CONTAMINATED SEDIMENT SHALL BE LOADED DIRECTLY INTO A TEN (10) TON DUMP TRUCK. KILN DUST WILL BE PLACED AT THE BOTTOM OF THE DUMP TRUCK DOOR PRIOR TO LOADING TO PREVENT ANY CONTAMINATED WATER FROM LEAKING UNTIL THE TRUCK CAN TRAVEL TO THE STORAGE AREA NO STOCK PILES SHALL BE PERMITTED.
4. RUN OFF CONTAMINATED LIQUID RETRIEVED IN STAGING AREA IS TO BE PUMPED INTO 55 GALLON DRUMS FOR TRUCK TRANSPORT TO THE BRIDGE SITE. THE 55 GALLON DRUMS SHALL THEN BE PUMPED INTO FILTERING SYSTEM.
5. PRIOR TO THE DEMOLITION OF THE TEMPORARY STAGING AREA, THE CONCRETE TUB SHALL BE CLEANED IN A MANNER WHICH ALLOWS ALL CONTAMINATED SOIL AND ASSOCIATED WATER TO BE SHIPPED OR TREATED ACCORDING TO THE CONDITIONS STATED UNDER THE TIDAL WETLANDS PERMIT.
6. THE AREA SHALL BE RESTORED TO ITS EXISTING CONDITION WITHIN TWO WEEKS AFTER TUB HAS BEEN PREPARED FOR DEMOLITION. ANY EXCAVATION SHALL BE FILLED TO ITS EXISTING ELEVATIONS. THE SLAB, TENT AND ANY OTHER ITEMS PERTAINING TO THIS TEMPORARY STAGING AREA SHALL BE DEMOLISHED OR REMOVED, AS DIRECTED BY THE ENGINEER.

FIELD CHANGE NO. 1
THIS DWG SUPERSEDES DWG NO. S-558 (12/29/09)

CITY OF NEW YORK
DEPARTMENT OF TRANSPORTATION
DIVISION OF BRIDGES

CONTRACT NO. **HBQ1162E**

EMERGENCY RECONSTRUCTION OF WEST ABUTMENT AND WINGWALLS OF BORDEN AVENUE BRIDGE OVER DUTCH KILLS

BOROUGH OF QUEENS B.I.N. 2-24041-0

TEMPORARY SEDIMENT STAGING AREA
SHEET 1 OF 2

DWG. NO.	SCALE	DATE	SHEET
S-558R	AS NOTED	12/29/09	98

STV Incorporated
architects/engineers/planners/interior designers
225 Park Avenue South, New York, NY 10003

SCALE IN FEET 1/8"=1'-0" 0 5' 10' 15' 20'

PREPARED BY
IN CHARGE A.P.M. DRAFTER M.R.
DESIGNER M.R. CHECKER A.P.M.

N.Y.C. D.O.T. MICROFILM IDENTIFICATION NUMBER
BIN 2-24041-0 ROLL H02 FRAME

CORRECTIVE ACTION PLAN

BORDEN AVENUE BRIDGE WEST ABUTMENT AND WINGWALL RECONSTRUCTION
BORDEN AVENUE BETWEEN 27TH STREET AND REVIEW AVENUE
LONG ISLAND CITY, NEW YORK 11101

NYCDOT CONTRACT NO.: #HBQ1162E
NYSDEC SPILL NO. 0903437

CONSULTANT PROJECT NO.: #0201606-0134

July 23, 2009

Prepared by:

STV Inc.
225 Park Avenue South
New York, New York 10003
Phone: (212) 777-4400
Fax: (646) 654-1861
Attn: Alan P. Marchan, P.E.

Prepared for:

NYCDOT
55 Water Street, 5th Floor
New York, New York 10041
Phone: (212) 839-4846
Fax: (212) 839-4925
Attn: George Klein, P.E

TABLE OF CONTENTS

1.0 INTRODUCTION 2
1.1 Site Location and Description 2
1.2 Project Background 2
1.3 Contamination Discovery 3
1.3.1 Summary of Sediment and Water Analytical Results 3
1.4 Spills Reporting 4
1.5 NYSDEC Consultation 4
1.6 Objectives 4
2.0 WATER TREATMENT AND DISCHARGE 6
2.1 Proposed Temporary Water Treatment System 6
2.2 Discharge Monitoring 6
3.0 SEDIMENT HANDLING AND DISPOSAL 8
3.1 Sediment Handling 8
3.2 Off-Site Disposal 9

FIGURE 1 – SITE LOCATION MAP 10
FIGURE 2- TEMPORARY OUTFALL PLAN AND DETAIL 11
FIGURE 3 – WEST WINGWALL AND ABUTMENT CROSS SECTIONS 12
FIGURE 4 – TEMPORARY SEDIMENT STAGING AREA 13
FIGURE 5 – TEMPORARY SEDIMENT STAGING AREA CROSS SECTION 14
FIGURE 6 – SEDIMENT STAGING AREA CATCH BASIN DETAILS 15

TABLE 1 – NYSDEC SOIL EXCEEDENCES 16
TABLE 2- NYSDEC GROUNDWATER EXCEEDENCES 17

APPENDIX A – ENVIRONMENTAL PERMITS 18
APPENDIX B - TEST AMERICA ANALYTICAL DATA REPORT 19
APPENDIX C - YORK ANALYTICAL DATA REPORT 20
APPENDIX D – WATER TREATMENT PLAN 21
APPENDIX E – SPDES PERMIT EQUIVALENT APPLICATION 22
APPENDIX F – TREATMENT SYSTEM SCHEMATIC 23
APPENDIX G – CEMENT KILN DUST MSDS 24
APPENDIX H – CLEAN EARTH FACILITY PERMIT AND SUPPORTING DOCUMENTATION 25
APPENDIX I – WASTE TRANSPORTER PERMIT 26

1.0 INTRODUCTION

On behalf of the New York City Department of Transportation (NYCDOT) STV Incorporated (STV) prepared this Corrective Action Plan (CAP) to be implemented at the Borden Avenue Bridge Site located on Borden Avenue in Queens, NY. The CAP was prepared to address remediation issues associated with petroleum-impacted sediment and water encountered during dewatering and excavation operations at the Site as part of the emergency bridge repair project.

STV understands that this CAP will likely be implemented pursuant to a Stipulation Agreement between NYCDOT and the New York State Department of Environmental Conservation (NYSDEC).

1.1 Site Location and Description

Borden Avenue is a two-lane east west oriented local city street in Queens extending from the East River to Greenpoint Avenue in the Borough of Queens, NY. The Borden Avenue Bridge is located just south of the Long Island Expressway between 27th Street and Review Avenue in Long Island City, NY 11101. Figure 1 provides a Site Location Map.

The Bridge, identified by the NYCDOT as B.I.N 2-24041-0, is a retractile type moveable bridge. The bridge structure carries a two-lane two-way vehicular roadway with sidewalks on either side over the Dutch Kills.

1.2 Project Background

In March 2008, the NYCDOT discovered that an existing crack in the bridge's west abutment wingwall had expanded, leading to a continued movement of the west abutment wall. NYCDOT began a weekly monitoring program which has shown the wall movement to be accelerating. On October 16, 2008, NYCDOT submitted a formal Declaration of Emergency to the City which stressed that it was critical to expeditiously perform the required repair work to avert serious danger to life, public safety, and property. Contracting services were procured to begin repairs and the bridge was closed as an emergency action due to safety concerns.

In order to perform preliminary bridge inspection work, a cofferdam was installed around the west abutment and its wingwalls. The cofferdam allows for the dewatering within its confines to lower the water level and facilitate sediments excavation. In addition, during the excavation work, the existing storm sewer outfall to the Dutch Kills had to be removed and rerouted. A 12-inch corrugated pipe was connected to an existing storm sewer structure and trenched in a southwest direction to a new outfall location adjacent to the southwestern end of the cofferdam. The discharge location is at N 40° 44' 19.98", W 73° 56' 36.97". Figure 2 provides the plan and detail of the temporary sewer outfall piping and discharge.

The following environmental permits have been obtained from the NYSDEC for this project to date:

- NYSDEC Determination of No Jurisdiction — Permit No. 2-6304-01440/00008
- NYSDEC Long Island Well Permit — Permit No. 2-6304-01440/00007
- NYSDEC Excavation & Fill in Navigable Waters — Permit No. 2-6304-01440/00006
- NYSDEC Water Quality Certification — Permit No. 2-6304-01440/00005
- NYSDEC Tidal Wetlands — Permit No. 2-6304-01440/00004

Copies of these permits are attached in Appendix A.

1.3 Contamination Discovery

During the excavation within the cofferdam, contractor personnel noted odors. On the morning of June 19, 2009, NYCDOT discovered an oil sheen and noticed an odor in the settling tank. NYCDOT shut down the dewatering operation and the contractor placed oil spill booms around the outfall area to prevent migration into the Dutch Kills.

At an estimated depth from the top of the channel to 10 feet below grade, excavated sediments began exhibiting the appearance and odor of petroleum. Two samples of the impacted sediment and two water samples: one within the settling tank and one at the outfall discharge, were collected on June 19, 2009 by Environmental Planning & Management (EPM), the environmental consultant for HAKS, the project resident engineering firm for the project. The samples were sent to Test America Laboratories in Shelton, CT (Test America) for analysis on an expedited turnaround request. Receipt of partial and preliminary analytical results began on June 22, 2009 with the preliminary footprint identification of a mix between a No. 6 fuel oil and motor fuel.

In addition, Moretrench collected a water sample from within the cofferdam excavation on June 19, 2009 and shipped the sample to York Analytical Laboratories of Stratford, CT. Results of both sets of samples are summarized below.

1.3.1 Summary of Sediment and Water Analytical Results

The samples collected by EPM were analyzed for volatile organic compounds (VOCs), semi-volatile organic compounds (SVOCs), pesticides, herbicides, and metals. STV compared the results of the samples to NYSDEC soil and groundwater standards. Specifically, soil concentrations were compared to the NYSDEC Recommended Soil Cleanup Objectives (TAGM 4046) and the State's Brownfield Cleanup, Track 1 - Unrestricted Use: Generic Soil Cleanup Table (Track 1) pursuant to 6 NYCRR Part 375-6.8. Water samples were compared to NYSDEC Technical & Operational Guidance Series (TOGS) Ambient Water Quality Standards and Guidance Values.

Acetone, eight individual polyaromatic hydrocarbons (PAHs), the pesticides dieldrin and endrin, and nine metals exceeded both TAGM 4046 and Track 1 objectives in both soil samples. Heptachlor epoxide also exceeded the TAGM objective in one of the two samples. Diesel range organic (DRO) compounds were detected in the soil samples at 5,100 and 7,000 mg/kg, respectively. The gasoline range organic (GRO) petroleum fraction of the two soil samples was considerably lower at 28 and 50 mg/kg, respectively.

Water sample W-Tank, collected within the settling tank revealed concentrations of six PAHs, three PCB aroclors and seven metals (antimony, arsenic, cadmium, chromium, copper, lead, and nickel) exceeding NYSDEC TOGS standards or guidance values as applicable. Lower concentrations of PAHs and metals were detected in Sample W-Exc which was collected from within the cofferdam excavation. Five PAHs and one metal (lead) exceeded the applicable TOGS standard or guidance value. PCBs were non-detected in this sample. The DRO concentration of the W-Tank sample was 11,000 ug/L while the W-Exc sample contained 890 ug/L DRO. The GRO concentration of the W-Tank sample was an estimated concentration of 0.018 ug/L and non detected in the W-Exc sample. Metals analysis indicated NYSDEC TOGS exceedences of copper (224µg/L), lead (150 µg/L) and nickel (135µg/L).

Summaries of the analytical results can be found in the attached Tables 1 and 2. The laboratory data package can be found in Appendices B and C.

In summary, sediment removed from the cofferdam on June 19, 2009 contained concentrations of metals, PAHs, and pesticides which exceeded NYSDEC guidelines. The fingerprint analysis, supported by the petroleum organic analyses (DRO and GRO), indicates that the petroleum present in the sediment is a heavier fuel oil between a motor fuel and a No. 6 fuel oil. None of the soil samples exceeded Toxic Characteristic Leaching Procedure (TCLP) parameters for characterizing the sediment for waste disposal purposes.

Water samples collected contained concentrations of PAHs, PCBs, antimony, arsenic, cadmium, chromium, copper, lead, and nickel which exceeded NYSDEC standards and guidance values.

1.4 Spills Reporting

The presence of petroleum contaminated soil was reported to the NYSDEC Spills Line on June 23, 2009. Spill number 0903437 was created and Ms. Veronica Zhune was assigned as NYSDEC Spills Case Manager.

In addition, the National Response Center (NRC) was contacted on June 26, 2009 to report the sheen that was discovered at the outfall area. The NRC assigned Spill Number 909828. NRC was informed that NYSDEC had been contacted and that a case number had been assigned.

It should be noted that Sanborn Fire Insurance Maps dated 1915, 1936, and 1950 from the site vicinity indicated the presence of a fuel storage facility adjacent to the northwest of the bridge from at least 1915 to at least 1950. STV has provided copies of these maps to Ms. Zhune of NYSDEC.

1.5 NYSDEC Consultation

A meeting was held with the NYSDEC in their Long Island City offices on June 29, 2009 to discuss the remedial measures that must be implemented in order to continue emergency bridge repair work at the site. NYSDEC indicated that a CAP must be prepared that addresses contaminated sediments and dewatering fluids in order to close out the NYSDEC spill case and continue with construction activities. It was agreed that the scope of the remediation would be limited to the work needed to address the emergency repair, i.e. management of sediments and dewatering fluid within the cofferdam.

STV and NYCDOT understand that in lieu of a complete SPDES permit application process, the NYSDEC will allow the submittal of a SPDES Permit Equivalent Application. The requirements for the application were provided to NYCDOT subsequent to the June 29, 2009 meeting. It is also understood that no public comment period or public hearings are required and that discharge standards will be dependent on the contamination present in the sediments and water. NYSDEC will forward a draft Stipulation Agreement to NYCDOT to memorialize the CAP.

1.6 Objectives

The objectives of this CAP are to:

- Implement procedures for handling and disposing of petroleum-impacted sediment from the cofferdam in order to proceed with the emergency bridge repair,

- Treat and discharge water generated from the dewatering operation within the confines of the cofferdam and from sediment stockpiles in a manner that complies with NYSDEC requirements and discharge to surface water standards,

- Conduct the work in an efficient and expeditious manner so as to minimize further delays to the emergency bridge repair project, and.

- Successfully close out the existing Spill Case No. 0903437.

2.0 WATER TREATMENT AND DISCHARGE

As a result of the petroleum-impacted sediment, Moretrench, under subcontract to Maracap, amended its Dewatering Plan, now referred to as a Water Treatment Plan (dated July 23, 2009). The Water Treatment Plan addresses the treatment of impacted groundwater from within the cofferdam and run off from the wet sediment stockpiles. The groundwater table will be lowered and withdrawn from the cofferdam through a series of permitted wells from within the confines of the cofferdam and treated on site through a designed water treatment system prior to discharge to the Dutch Kills. The information provided in the CAP meets the SPDES Permit Equivalent Application Requirements for Remediation Discharges to Surface or Groundwaters. A copy of the plan is provided in Appendix D and a copy of the completed SPDES Permit Equivalent Application is attached as Appendix E.

2.1 Proposed Temporary Water Treatment System

The water treatment system has been designed by Moretrench to provide for sufficient constituent removal from the water to meet NYSDEC discharge requirements. A summary of the general treatment components is as follows.

- One settling tank
- One Chemical Mixing Tank
- One Chemical Injection and Storage Unit
- Two Clarifiers rated for 300 gallons per minute (gpm)
- One Sludge Pump
- One Cone Bottom Tank
- Two Electric Transfer Pumps
- Three 6-bag Filter Housings in parallel operation with a 600 gpm nominal capacity each
- Two con-code Carbon Adsorbers, each with 10,000 lbs activated carbon, 600 gpm nominal capacity in series
- One 6-inch diameter flow meter with totalizer in the 90 to 1,200 gpm range
- Piping and/or flexible hosing from the existing settling tank to the flow meter.

A schematic drawing of the treatment components is provided as Appendix F. The treatment system has been designed for a discharge rate of 600 gpm.

Solids and/or sludge that have settled to the bottom of the clarifier will need to be periodically removed to prevent accumulated material from clogging the tube settlers thus reducing the efficiency of the unit. The base of the bulk settling clarifier contains a series of valved clean out ports. Solids/sludge can be pumped from these ports to a sludge holding tank through the use of an electric diaphragm sludge pump. Water decanted from the sludge holding tank can be introduced back to the head of the plant while the remaining solids will be periodically transported to the Clean Earth facility in Carteret, NJ.

2.2 Discharge Monitoring

A discharge monitoring plan to include analytical parameters and sampling frequency will be developed upon review and approval of this CAP by NYSDEC Division of Water, Bureau of Water Permits.

The estimated duration for the effluent discharge is three months. The first day of discharge will be dependent on NYSDEC approval of the CAP, and treatment system installation.

The water treatment system will be operated and maintained by Maracap with technical assistance provided by Moretrench. The total discharge volume, average pump rate, and times of pump operation will be documented daily. The flow meters will be equipped with totalizers which measure the cumulative flow through a meter. Standby power and standby vacuum pump will be onsite and maintained in proper working order.

3.0 SEDIMENT HANDLING AND DISPOSAL

Section 3 presents the procedures to be employed to handle and dispose of the Dutch Kills sediments that will be removed in conjunction with the dewatering operation.

NYCDOT intends to only manage the contaminated soils and water within the cofferdam and only to the limits of the contract construction excavation. Post-excavation soil sampling will not be technically feasible within the cofferdam since a 2- foot deep tremie cap will be placed for the entire bottom of the cofferdam to prevent any contaminated liquid to resurface prior to pulling the metal sheets from the cofferdam. There is potential for petroleum contamination to remain outside the cofferdam and construction project limits which will remain in place at the completion of the project. Figure 3 shows a cross section of the proposed west wingwall and abutment emergency reconstruction.

3.1 Sediment Handling

Sediment will continue to be excavated from within the confines of the cofferdam by either a *CAT* 320 or *CAT* 345 Excavator or through the use of a Clamshell attached to the HB248 Link belt crane. Excavated sediment will be stored in a nearby lot beneath the Long Island Expressway (LIE)/495 viaduct at 27th Street and 51st Avenue (approximately 500 feet north of the project site). The lot is leased by the NYCDOT from the City of New York. The use of this additional work area is necessary to allow the temporary staging of excavated material generated during around the clock dewatering and excavation operations. Figure 4 provides a drawing which shows the layout of the staging area.

The sediment staging area will be cleared of vegetation prior to placement of filter fabric and 6- mil poly sheeting. A minimum of a 6- inch thick slab will be placed on top of the poly and filter fabric. The concrete slab sill be surrounded with 6-inch curbing. Concrete jersey barriers, interlocked with additional poly placed over them to the ground will be placed adjacent to curbing. Hay bales will be placed as an additional layer of containment along the perimeter of the area (fence line). Figure 5 depicts a typical cross section of the containment features.

The 6- inch minimum concrete slab will be sloped to collect water from the excavated sediment into a NYC Type II Precast Catch Basin with a precast top and a C.I drain inlet The precast top will be set 6" below the top of the new slab. The casting will then be set on top, backfilled all around, and the new concrete slab will be poured over the top of the precast cover and flush to the casting. Figure 6 provides construction details of the catch basin. If drained water accumulates in the basin, it will be pumped dry as necessary using either 55-gallon drums or a vacuum truck and transported to the on-site treatment system for treatment prior to discharge into the Dutch Kills.

Newly excavated sediment will transported via a 20-cubic yard water-tight dump truck to the lot and placed in a conical pile within the containment to facilitate excess water runoff into the collection sump. Once this material has been determined to be sufficiently drained, it will be spread out for drying and mixing with kiln dust to await loading and off-site transport. Appendix G provides a Material Safety Data Sheet (MSDS) of the kiln dust.

Water-tight trucks will be loaded via a pay loader with the dried material. Additional kiln dust will be placed in the rear of the truck as an extra precaution against leakage.

The staging area will be returned to its original state when the project is completed. Excavations will be backfilled with clean fill and the original grade restored. The slab, tenting, and any other times pertaining to the staging area will be removed from the site.

3.2 Off-Site Disposal

The dried sediment will be shipped off site to Clean Earth of Carteret, New Jersey (Clean Earth) (NJ Facility Registration # 132310) for treatment. Clean Earth is registered by the New Jersey Department of Environmental Protection (NJDEP) as an approved Recycling Center for Petroleum Contaminated Soil. Appendix H provides the NJDEP State permit approval and other supporting documentation for the Clean Earth facility.

The material will be shipped as non-hazardous waste by Rainbow Transport Corporation of Hackettstown, NJ. Rainbow Transport holds a valid NYSDEC Part 364 Waste Transporter Permit No. NJ-586 (Effective 6/26/09 and Expires 5/27/10). Appendix I provides a copy of the waste transporter permit.

Proper documentation will be collected to ensure that material is disposed accordingly. Each waste load will be tracked using a Clean Earth non-hazardous material manifest.

Figure 1 – Site Location Map

SCALE: 1" = 2,000'

0 1,000 2,000

REFERENCE: United States Department of Interior Geological Survey Brooklyn, NY (1967, Photorevised 1979)

PROJECT LOCATION MAP
BORDEN AVENUE BRIDGE OVER THE DUTCH KILLS CREEK
NEW YORK CITY DEPARTMENT OF TRANSPORTATION

Figure 2- Temporary Outfall Plan and Detail

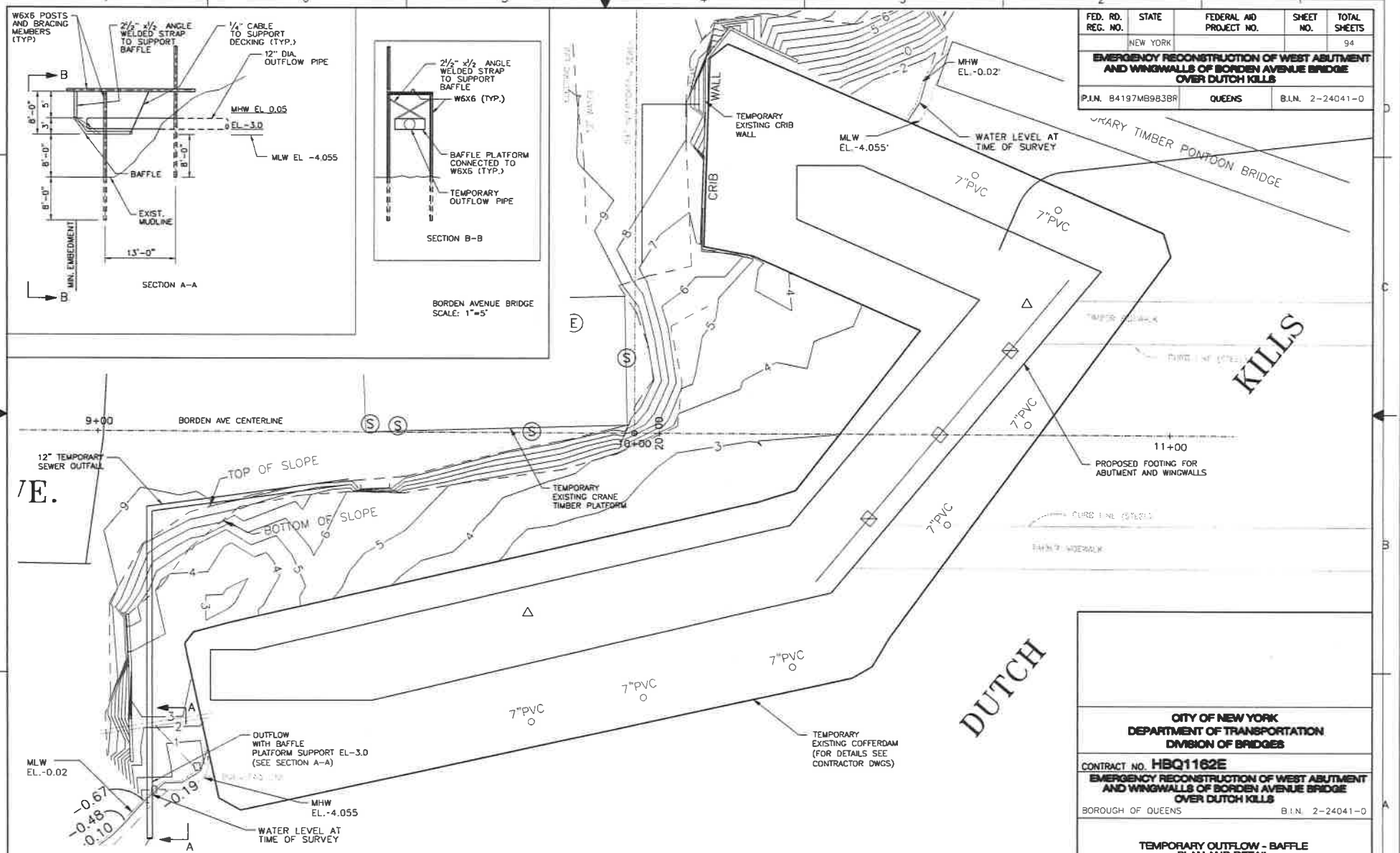

FED. RD. REG. NO.	STATE	FEDERAL AID PROJECT NO.	SHEET NO.	TOTAL SHEETS
	NEW YORK			94

EMERGENCY RECONSTRUCTION OF WEST ABUTMENT AND WINGWALLS OF BORDEN AVENUE BRIDGE OVER DUTCH KILLS

P.I.N. 84197MB983BR | QUEENS | B.I.N. 2-24041-0

STV Incorporated
architects/engineers/planners/interior designers
225 Park Avenue South, New York, NY 10003

PREPARED BY
IN CHARGE A.P.M. DRAFTER D.H.
DESIGNER E.N.B. CHECKER B.T.

N.Y.C. D.O.T. MICROFILM IDENTIFICATION NUMBER
BIN 2-24041-0 ROLL H02 FRAME

CITY OF NEW YORK
DEPARTMENT OF TRANSPORTATION
DIVISION OF BRIDGES

CONTRACT NO. HBQ1162E

EMERGENCY RECONSTRUCTION OF WEST ABUTMENT AND WINGWALLS OF BORDEN AVENUE BRIDGE OVER DUTCH KILLS

BOROUGH OF QUEENS B.I.N. 2-24041-0

TEMPORARY OUTFLOW - BAFFLE PLAN AND DETAIL

DWG. NO.	SCALE	DATE	SHEET
XXXX	AS NOTED	06/16/09	XX

Figure 3 – West Wingwall and Abutment Cross Sections

FED. RD. REG. NO.	STATE	FEDERAL AID PROJECT NO.	SHEET NO.	TOTAL SHEETS
	NEW YORK			XXX

EMERGENCY RECONSTRUCTION OF WEST ABUTMENT AND WINGWALLS OF BORDEN AVENUE BRIDGE OVER DUTCH KILLS

P.I.N. 84197MB983BR	QUEENS	B.I.N. 2-24041-0

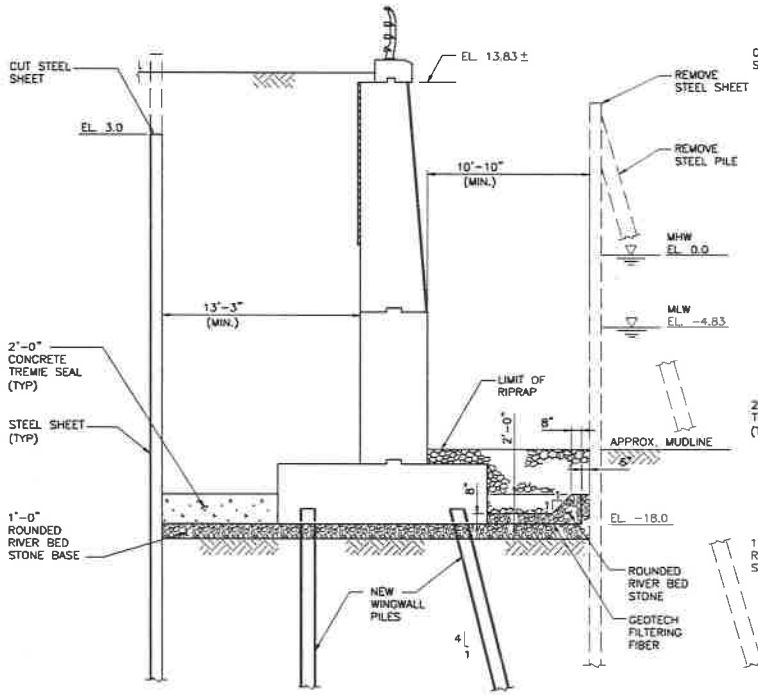

WINGWALL SECTION
SCALE 1/4"=1'-0"

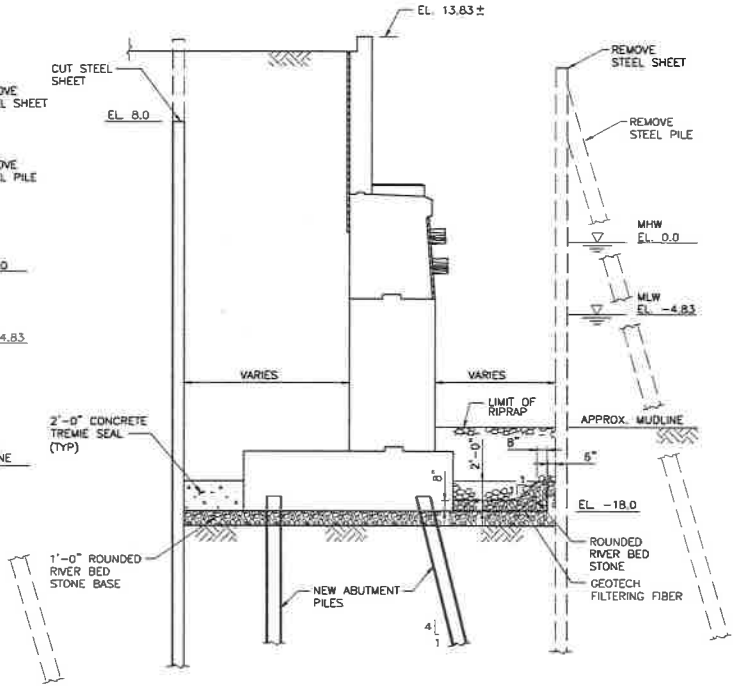

ABUTMENT SECTION
SCALE: 1/4"=1'-0"

SUGGESTED SEQUENCE OF CONSTRUCTION FOR ABUTMENT AND WINGWALL

1. CONSTRUCT REMAINDER OF ABUTMENT AND WINGWALL.
2. BACKFILL TO BOTTOM OF ROADWAY.
3. MAKE A 1'-0" DEEP ROUNDED RIVER STONE BASE. CONSTRUCT THE 2'-0" TREMIE SEAL ON BACK OF WALLS. INSTALL KATCHALL GEOTECH FIBER (OR APPROVED EQUAL) IN FRONT OF WALL AND INSTALL AS INDICATED IN THE PLANS.
3. REMOVE COFFERDAM. CUT SHEETING IN BACKSIDE OF WALL AND ABUTMENT TO ELEV. 8'±. REMOVE SHEETING AND STEEL PILES IN FRONT OF WALLS AND ABUTMENT.
4. AFTER STEEL SHEETS ARE PULLED CONTRACTOR SHALL MAKE RIPRAP ELEVATION MATCH THE EXISTING MUDLINE ELEVATION.

CITY OF NEW YORK
DEPARTMENT OF TRANSPORTATION
DIVISION OF BRIDGES

CONTRACT NO. **HBQ1162E**

EMERGENCY RECONSTRUCTION OF WEST ABUTMENT AND WINGWALLS OF BORDEN AVENUE BRIDGE OVER DUTCH KILLS

BOROUGH OF QUEENS B.I.N. 2-24041-0

CONSTRUCTION STAGING SECTION 5 [1]

DWG. NO.	SCALE	DATE	SHEET
S-359	AS NOTED	05/15/09	88

STV Incorporated
architects/engineers/planners/interior designers
225 Park Avenue South, New York, NY 10003

1/4"=1'-0" SCALE IN FEET 0 1' 2' 3' 4' 5' 6' 7' 8' 9'10'

PREPARED BY
IN CHARGE A.P.M. DRAFTER D.H.
DESIGNER CHECKER E.E.

N.Y.C. D.O.T. MICROFILM IDENTIFICATION NUMBER
BIN 2-24041-0 ROLL H02 FRAME

7/21/2009 I:\Projects\0201608\0201608_0001\70_Technical Documents Reports\72_Technical Reports\1606\Borden\Emergency Work\MF 03-09-09\Other Dwgs\S-359.dgn

Figure 4 – Temporary Sediment Staging Area

FED. RD. REG. NO.	STATE	FEDERAL AID PROJECT NO.	SHEET NO.	TOTAL SHEETS
	NEW YORK			XXX

EMERGENCY RECONSTRUCTION OF WEST ABUTMENT AND WINGWALLS OF BORDEN AVENUE BRIDGE OVER DUTCH KILLS

P.I.N. 84197MB983BR | QUEENS | B.I.N. 2-24041-0

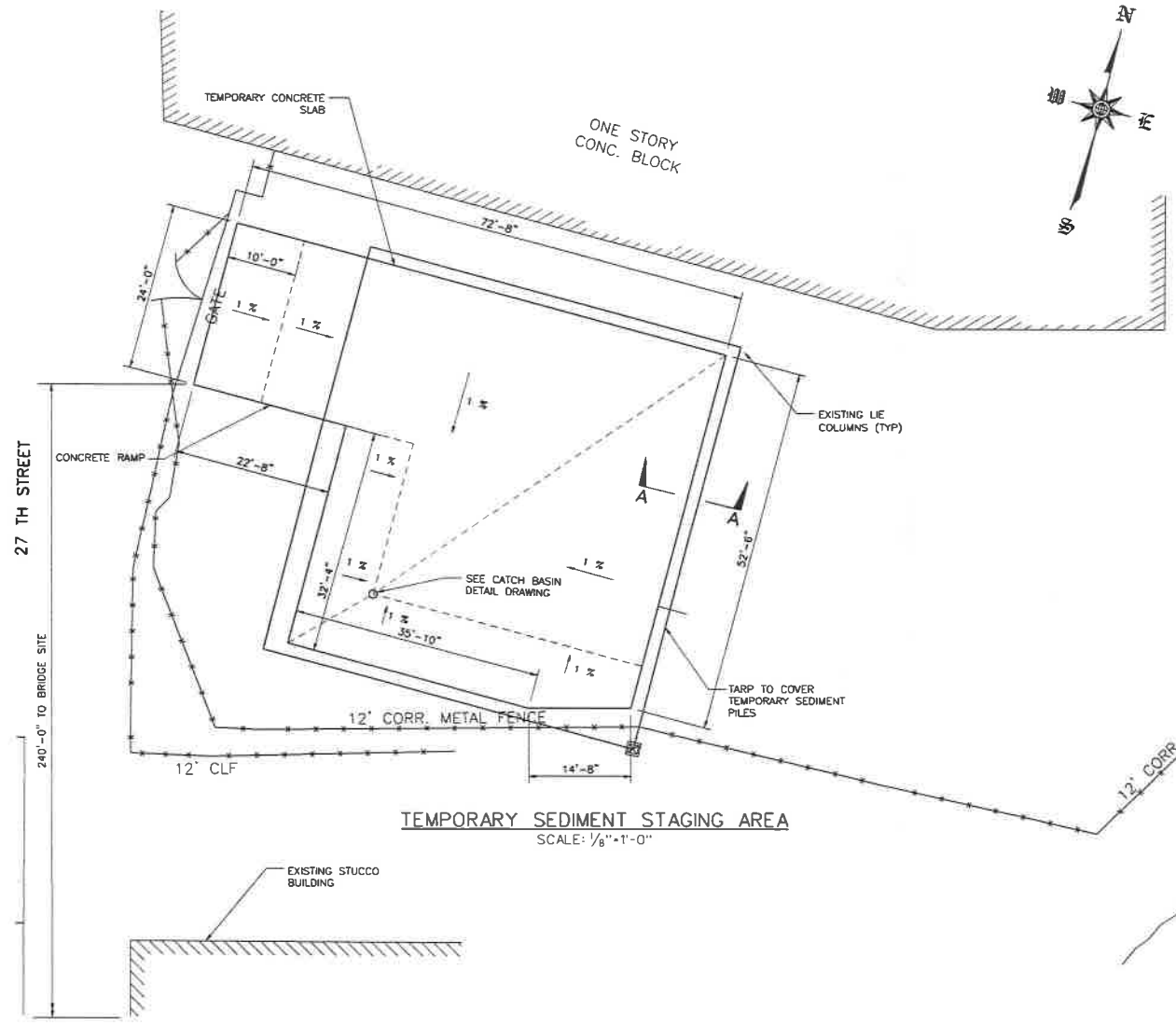

TEMPORARY SEDIMENT STAGING AREA

SCALE: 1/8"=1'-0"

NOTES:

1. SECTION A-A IS TYPICAL FOR THE PERIMETER OF SLAB, EXCEPT FOR THE RAMP ENTRANCE.
2. A TEMPORARY ASPHALT RAMP SHALL BE PROVIDED AT ENTRANCE OF RAMP TO PROVIDE TRUCK ACCESS TO THE TEMPORARY SLAB.
3. RUN OFF CONTAMINATED LIQUID IS TO BE PUMPED INTO 55 GALON DRUMS FOR TRANSPORT TO THE FILTERING SYSTEM.
4. THE AREA SHALL BE RETURNED TO ITS ORIGINAL STATE. ANY EXCAVATION SHALL BE FILLED TO ITS ORIGINAL ELEVATION. THE SLAB, TENT AND ANY OTHER ITEMS PERTAINING TO THIS TEMPORARY STAGING AREA SHALL BE DEMOLISHED OR REMOVED.

CITY OF NEW YORK
DEPARTMENT OF TRANSPORTATION
DIVISION OF BRIDGES

CONTRACT NO. HBQ1162E

EMERGENCY RECONSTRUCTION OF WEST ABUTMENT AND WINGWALLS OF BORDEN AVENUE BRIDGE OVER DUTCH KILLS

BORDOUGH OF QUEENS B.I.N. 2-24041-0

TEMPORARY STAGING SEDIMENT AREA

DWG. NO.	SCALE		SHEET
	AS NOTED		

SCALE IN FEET
1/8"=1'-0" 0 5' 10' 15' 20'

PREPARED BY
IN CHARGE _____ DRAFTER _____
DESIGNER _____ CHECKER _____

N.Y.C. D.O.T. MICROFILM IDENTIFICATION NUMBER
BIN 2-24041-0 ROLL H02 FRAME

7/22/2009 I:\Projects\0201600\0201600_0001\70_Technical Documents Reports\73_Technical Reports\1606\Borden\Emergency Work\WT 03-09-09\Other Dwgs\SedPlan.dgn

Figure 5 – Temporary Sediment Staging Area Cross Section

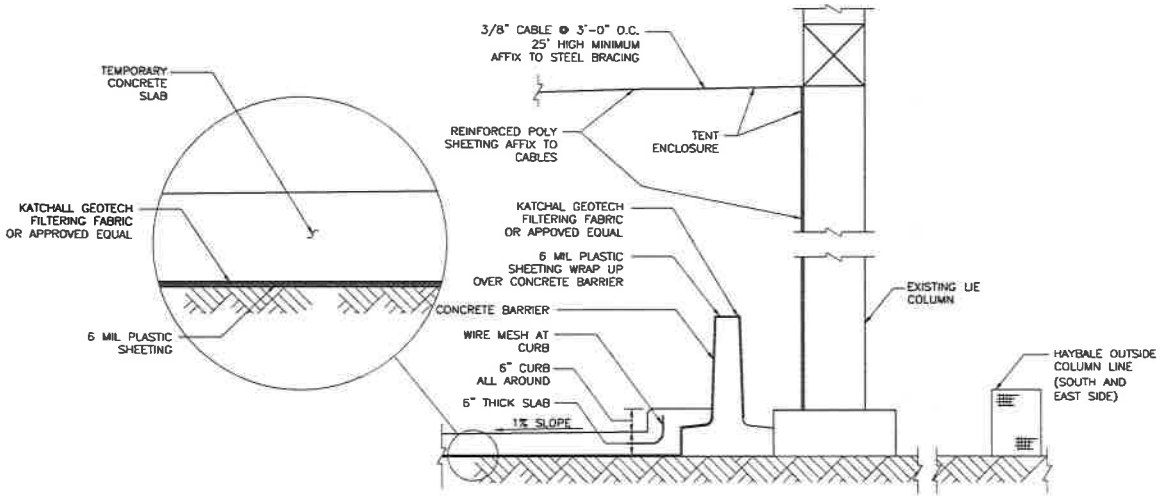

SECTION A-A

N.T.S.

Figure 6 – Sediment Staging Area Catch Basin Details

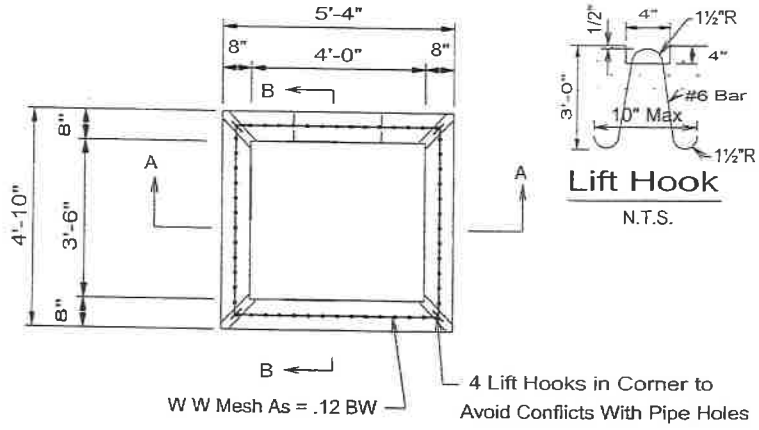

Plan

Lift Hook

N.T.S.

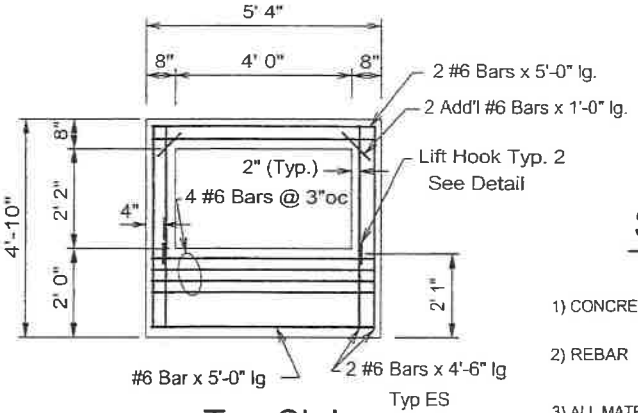

Top Slab

Precast Removable

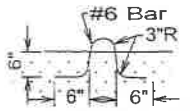

Lift Hook

Top Slab

N.T.S.

Specifications

1) CONCRETE 4000 PSI @28 DAYS W/ 5% AIR ENTRAINMENT

2) REBAR ASTM A-615 GRADE 60

3) ALL MATERIALS SHALL MEET THE REQUIREMENTS OF N.Y.C. D.D.C. October 1997

4) ALL OTHER DETAILS SUCH AS C.I. HOOD, CASTINGS,ETC. SHALL MEET NYC DDC SPECIFICATIONS AND ARE TO BE FURNISHED AND INSTALLED BY GENERAL CONTRACTOR.

5) LOCATION OF ANGLE BASIN CONNECTIONS MAY BE VARIED TO SUIT FIELD CONDITIONS

6) KEYED CONSTRUCTION JOINTS REQ;D BETWEEN SUCCESSIVE POURS.

7) PLACEMENT OF REINFORCEMENT TO BE CERTIFIED BY COMPANY OFFICER OR PROFESSIONAL ENGINEER.

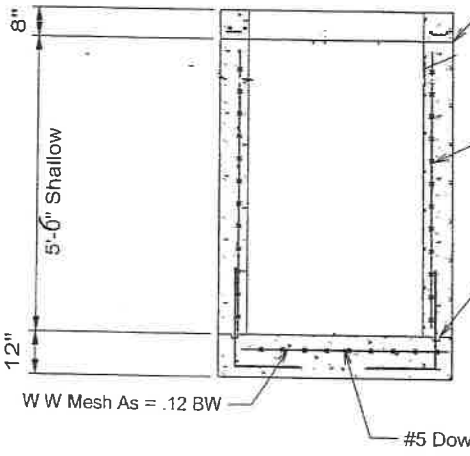

Section A-A

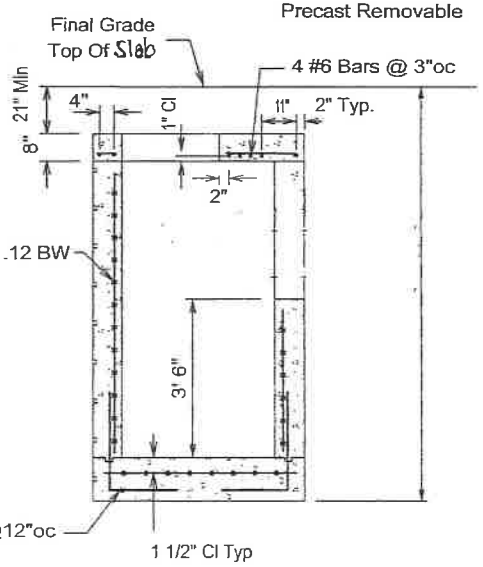

Section B-B

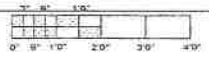

SCALE

Product: NYC DDC Type II Precast Catch Basin -			
scale	date	dwn. by	dwg. no.
As Noted			

TABLE 1 – NYSDEC SOIL EXCEEDENCES

Table 1

Soil Exceedences -
Borden Avenue Bridge
Over Dutch Kills
Long Island City, New York 11101

Sample ID			S-1		S-2	
Sampling Date			6/19/2009		6/19/2009	
Matrix			Soil		Soil	
Depth (feet)						
Units			(µg/Kg)		(µg/Kg)	
	NYSDEC Recommended Soil Cleanup Objective (µg/Kg)	NYSDEC (Part 375-6.8) Soil Cleanup Objective** (Track 1) (µg/Kg)				
VOCs						
Acetone	200	50	**210**	**J***	**340**	*
Methylene Chloride	100	50	**100**	**JB**	**98**	**JB**
Xylenes, Total	1,200	260	**300**		**90**	
SEMIVOLATILE COMPOUNDS						
Benzo[a]anthracene	224 or MDL	1,000	**6,200**	**J**	**8,900**	**J**
Chrysene	400	1,000	**6,900**	**J**	**9,200**	**J**
Bis(2-ethylhexyl) phthalate	50,000	NC	130,000		110,000	
Di-n-octyl phthalate	50,000	NC	ND		ND	
Benzo[b]fluoranthene	1,100 or MDL	1,000	**5,000**	**J**	**5,300**	**J**
Benzo[k]fluoranthene	1,100 or MDL	800	**1,900**	**J**	**1,800**	**J**
Benzo[a]pyrene	61 or MDL	1,000	**6,400**	**J**	**7,200**	**J**
Indeno[1,2,3-cd]pyrene	3,200	500	**14,000**		**14,000**	
Dibenz(a,h)anthracene	14 or MDL	330	**11,000**	**J**	**11,000**	**J**
PEST/ HERBICIDES						
4,4'-DDD	2,900	3.3	**310**		**120**	
4,4'-DDE	2,100	3.3	**130**		**66**	
4,4'-DDT	2,100	3.3	**410**	*	**260**	*
Aldrin	41	5	**6.4**	**J**	ND	
Dieldrin	44	5	**180**		**74**	
Endrin	100	14	**270**		**200**	
Heptachlor epoxide	20	NC	27		11	
PCBs						
Aroclor-1242	10,000	100	**590**		**720**	
Aroclor-1254	10,000	100	**520**		**1,100**	
Aroclor-1260	10,000	100	**760**		**890**	

Footnotes:

NYSDEC - New York State Department of Environmental Conservation.

USEPA - United States Environmental Protection Agency.

VOCs - Volatile Organic Compounds.

Table 1

Soil Exceedences -
Borden Avenue Bridge
Over Dutch Kills
Long Island City, New York 11101

SVOCs - Semi- Volatile Organic Compounds.

U - The compound was not detected at the indicated concentration.

J - Data indicates the presence of a compound that meets the identification criteria. The result is less than the quantitation limit but greater than zero. The concentration given is an approximate value.

B - The Analyte was found in an associate blank, as well as the sample.

SB - Site Background.

NC - No Criteria.

MDL - Method Detection Limit.

mg/Kg - milligrams per kilogram.

- Indicates an exceedance of NYSDEC

Table 1

Soil Exceedences -
Borden Avenue Bridge
Over Dutch Kills
Long Island City, New York 11101

Sample ID			S-1		S-2	
Sampling Date			6/19/2009		6/19/2009	
Matrix			Soil		Soil	
Depth (feet)						
Units			(µg/Kg)		(µg/Kg)	
	NYSDEC Recommended Soil Cleanup Objective (µg/Kg)	NYSDEC (Part 375-6.8) Soil Cleanup Objective** (Track 1) (µg/Kg)				
VOCs						
Acetone	200	50	**210**	**J***	**340**	*
Methylene Chloride	100	50	**100**	**JB**	**98**	**JB**
Xylenes, Total	1,200	260	**300**		**90**	
SEMIVOLATILE COMPOUNDS						
Benzo[a]anthracene	224 or MDL	1,000	**6,200**	**J**	**8,900**	**J**
Chrysene	400	1,000	**6,900**	**J**	**9,200**	**J**
Bis(2-ethylhexyl) phthalate	50,000	NC	130,000		110,000	
Di-n-octyl phthalate	50,000	NC	ND		ND	
Benzo[b]fluoranthene	1,100 or MDL	1,000	**5,000**	**J**	**5,300**	**J**
Benzo[k]fluoranthene	1,100 or MDL	800	**1,900**	**J**	**1,800**	**J**
Benzo[a]pyrene	61 or MDL	1,000	**6,400**	**J**	**7,200**	**J**
Indeno[1,2,3-cd]pyrene	3,200	500	**14,000**		**14,000**	
Dibenz(a,h)anthracene	14 or MDL	330	**11,000**	**J**	**11,000**	**J**
PEST/ HERBICIDES						
4,4'-DDD	2,900	3.3	**310**		**120**	
4,4'-DDE	2,100	3.3	**130**		**66**	
4,4'-DDT	2,100	3.3	**410**	*	**260**	*
Aldrin	41	5	**6.4**	**J**	ND	
Dieldrin	44	5	**180**		**74**	
Endrin	100	14	**270**		**200**	
Heptachlor epoxide	20	NC	27		11	
PCBs						
Aroclor-1242	10,000	100	**590**		**720**	
Aroclor-1254	10,000	100	**520**		**1,100**	
Aroclor-1260	10,000	100	**760**		**890**	

Footnotes:

NYSDEC - New York State Department of Environmental Conservation.

USEPA - United States Environmental Protection Agency.

VOCs - Volatile Organic Compounds.

Table 1

Soil Exceedences -
Borden Avenue Bridge
Over Dutch Kills
Long Island City, New York 11101

SVOCs - Semi- Volatile Organic Compounds.

U - The compound was not detected at the indicated concentration.

J - Data indicates the presence of a compound that meets the identification criteria. The result is less than the quantitation limit but greater than zero. The concentration given is an approximate value.

B - The Analyte was found in an associate blank, as well as the sample.

SB - Site Background.

NC - No Criteria.

MDL - Method Detection Limit.

mg/Kg - milligrams per kilogram.

- Indicates an exceedance of NYSDEC

TABLE 2- NYSDEC GROUNDWATER EXCEEDENCES

Table 2

Groundwater Exceedences -
Borden Avenue Bridge
Over Dutch Kills
Long Island City, New York 11101

Sample ID Sampling Date Matrix Units		W-Tank 6/19/2009 Aqueous (µg/L)		W-Exc 6/19/2009 Aqueous (µg/L)	
	NYSDEC TOGS Standards and Guidance Values (µg/L)				
SEMIVOLATILE COMPOUNDS (GC/MS)					
Benzo[a]anthracene	0.002	8.6	J	0.74	J
Chrysene	0.002	8.3	J	0.66	J
Bis(2-ethylhexyl) phthalate	5	290		17	
Benzo[b]fluoranthene	0.002	4.4	J	0.52	J
Benzo[k]fluoranthene	0.002	1.7	J	ND	
Indeno[1,2,3-cd]pyrene	0.002	4	J	0.92	J
PCBs					
Aroclor-1242	0.09*	1.6		ND	
Aroclor-1254	0.09*	2.3		ND	
Aroclor-1260	0.09*	2.2		ND	
METALS					
Antimony	3	16.2	J	ND	
Arsenic	25	25.8		7.3	J
Cadmium	5	13.1		ND	
Chromium	50	101		18.4	J
Copper	200	290		54.8	
Lead	25	280		47.0	
Nickel	100	126		30.0	

Footnotes (Groundwater):

NYSDEC - New York State Department of Environmental Conservation.
TOGS - Technical and Operational Guidance Series.
VOCs - Volatile Organic Compounds.
SVOCs - Semi- Volatile Organic Compounds.
U - The compound was not detected at the indicated concentration.
J - Data indicates the presence of a compound that meets the identification criteria. The result is less than the quantitation limit but greater than zero. The concentration given is an approximate value.
NC - No Criteria.
ug/L - micrograms per liter.
mg/L - milligrams per liter.
- Indicates an exceedance of TOGs.

APPENDIX A – ENVIRONMENTAL PERMITS

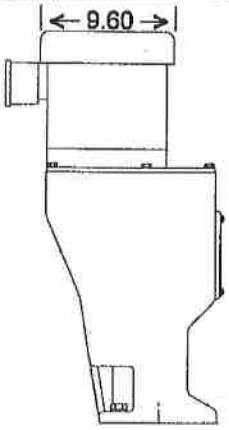

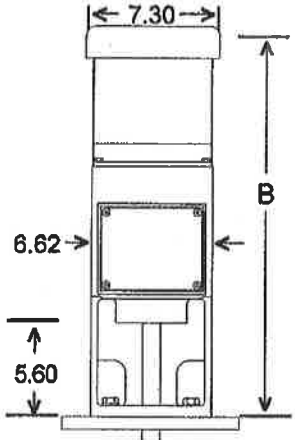

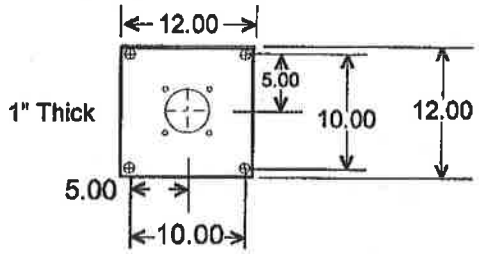

Baseplate Option

MODEL POG OPEN TANK

Model	HP	Motor RPM	Prop RPM	B	Approx. Wt. (In lbs.)
POG-14	1/4	1750	350	22.9	125
POG-13	1/3	1750	350	22.9	128
POG-12	1/2	1750	350	22.9	130
POG-34	3/4	1750	350	25.1	132
POG-11	1	1750	350	25.1	132
POG-15	1 1/2	1750	350	25.1	142
POG-2	2	1750	350	27.8	154

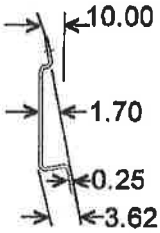

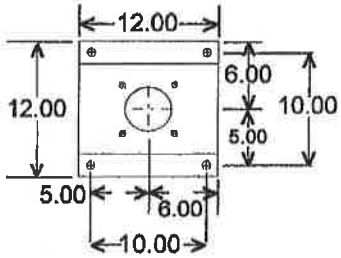

Angle Riser Option

MODEL DESIGNATIONS:

POG – Fixed Mount, Gear Drive, Open Tank
PSG – Seal, Fixed Mount, Gear Drive, Closed Tank
PMG – Mechanical Seal, Fixed mount, Gear Drive, Closed Tank

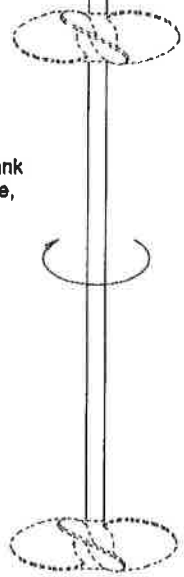

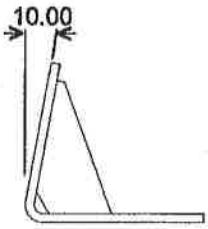

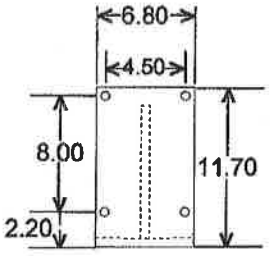

Wall Mount Option

Copyright ©2005 Philadelphia Mixing Solutions

Series JG
Gear Drive Mixer, Clamp or Cup Plate Mount
Heavy Helical Gear, 350 rpm, Grease Lube

Neptune's most powerful mixers for the most difficult mixing applications. Grease filled gearbox eliminates oil seal and the possibility of oil contamination of process.

Features

- No clutches to slip, wear or replace.
- 316SS propellers and shafts are standard. Optional coatings such as rubber, PVC or Teflon® also available.
- Square pitch 1.0 ratio marine propellers are used exclusively. Flow coefficients and power consumption characteristics equal those of the best hydrofoil impeller designs.
- Vibration-absorbing pad standard.
- Motors are available in TEFC or explosion-proof enclosures (1750 rpm, 56C frame). Air motors also available.
- Gears run in grease lubrication. Cannot leak oil.
- All JG mixer shaft bearings are permanently lubricated.
- Variable speed drives also available.
- Cast aluminum housing.
- Mounting clamp has adjustable angle of entry by indexed ball-and-socket design to achieve various process results.
- Fixed cup plate mount optional on 1/3 HP through 1½ HP. Standard on 2 HP and larger models.

Model Number	Standard Motor Description	A Shaft Length	B	C		D Shaft Diameter
				Single	Dual	
Totally-enclosed fan-cooled (TEFC)						
JG-2.0	1/3 HP-1-115/230	48"	17⅝"	10"	8"	¾"
JG-2.1	1/3 HP-3-230/460	48"	17⅜"	10"	8"	¾"
JG-3.0	1/2 HP-1-115/230	48"	18½"	12"	10"	¾"
JG-3.1	1/2 HP-3-230/460	48"	17⅝"	12"	10"	¾"
JG-4.0	3/4 HP-1-115/230	60"	18⅜"	13"	11"	¾"
JG-4.1	3/4 HP-3-230/460	60"	18⅛"	13"	11"	¾"
JG-5.1	1 HP-3-230/460	60"	18⅜"	14"	12"	1"
JG-6.1	1½ HP-3-230/460	60"	18¾"	15"	13"	1"
JG-7.1	2 HP-3-230/460	60"	20⅝"	16"	14"	1¼"
JG-8.1	3 HP-3-230/460	72"	21⅝"	16"	15"	1¼"
Explosion-proof class 1 group D (EP)						
JG-2.2	1/3 HP-1-115/230	48"	20½"	10"	8"	¾"
JG-2.3	1/3 HP-3-230/460	48"	17⅜"	10"	8"	¾"
JG-3.2	1/2 HP-1-115/230	48"	21"	12"	10"	¾"
JG-3.3	1/2 HP-3-230/460	48"	19⅝"	12"	10"	¾"
JG-4.2	3/4 HP-1-115/230	60"	21½"	13"	11"	¾"
JG-4.3	3/4 HP-3-230/460	60"	19⅝"	13"	11"	¾"
JG-5.3	1 HP-3-230/460	60"	20½"	14"	12"	1"
JG-6.3	1½ HP-3-230/460	60"	20½"	15"	13"	1"
JG-7.3	2 HP-3-230/460	60"	22⅛"	16"	14"	1¼"
Air motor						
JG-3.4	1/3 HP to 1/2 HP AIR Air Requirements: 12-20CFM at 40-80PSI	48"	17⅛"	12"	10"	¾"
JG-4.4	3/4 HP AIR Air Requirements: 30CFM at 60PSI	60"	18"	13"	11"	¾"
JG-5.4	1 HP AIR Air Requirements: 40CFM at 40PSI	60"	19⅛"	14"	12"	1"
JG-6.4	1½ HP AIR Air Requirements: 55CFM at 60PSI	60"	19⅛"	15"	13"	1"
JG-7.4	2 HP AIR Air Requirements: 65CFM at 70PSI	60"	15¾"	16"	14"	1¼"
JG-8.4	4 HP AIR Air Requirements: 125CFM at 90PSI	72"	16¾"	16"	15"	1¼"

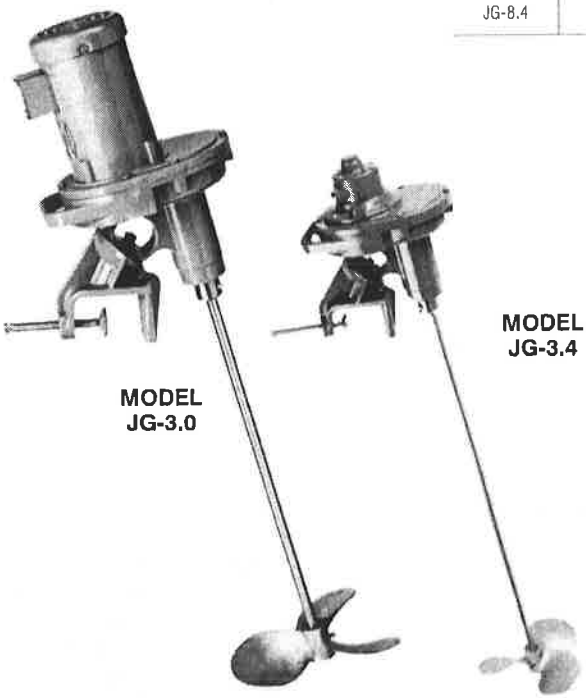

MODEL JG-3.0

MODEL JG-3.4

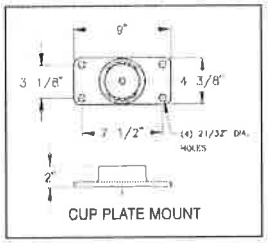

CUP PLATE MOUNT

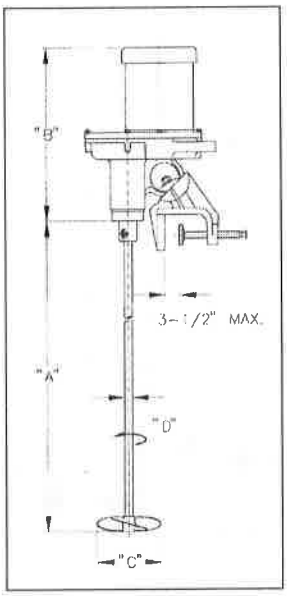

B731-468SI

Data Sheet

Series B
Electronic Metering Pumps

Configuration

Model B92 | 1 | - | 392SI

Control & Output Code

Manual Control
Speed (stroking frequency) and stroke length manually adjustable

B11 ---	1.6 GPH	(6.1 l/h) ---	150 psi (10.30 Bar)
B12 ---	2.5 GPH	(9.5 l/h) ---	100 psi (6.90 Bar)
B13 ---	4.5 GPH	(17.0 l/h) ---	50 psi (3.50 Bar)
B14 ---	7.0 GPH	(26.5 l/h) ---	30 psi (2.07 Bar)

Instrument Responsive / Manual Control
Manual adjustment features of Series B1 plus switch conversion to external control for automatic systems.

B71 ---	1.6 GPH	(6.1 l/h) ---	150 psi (10.30 Bar)
B72 ---	2.5 GPH	(9.5 l/h) ---	100 psi (6.90 Bar)
B73 ---	4.5 GPH	(17.0 l/h) ---	50 psi (3.50 Bar)
B74 ---	7.0 GPH	(26.5 l/h) ---	30 psi (2.07 Bar)
B91 ---	1.6 GPH	(6.1 l/h) ---	150 psi (10.30 Bar)
B92 ---	2.5 GPH	(9.5 l/h) ---	100 psi (6.90 Bar)
B93 ---	4.5 GPH	(17.0 l/h) ---	50 psi (3.50 Bar)
B94 ---	7.0 GPH	(26.5 l/h) ---	30 psi (2.07 Bar)

Voltage Code

1 ---------	120 VAC, US Plug
2 ---------	240 VAC, US Plug
3 ---------	220-240 VAC, DIN Plug
5 ---------	240-250 VAC, UK Plug
6 ---------	240-250 VAC, AUST/NZ Plug
7 ---------	220-240 VAC, SWISS Plug

Liquid End

See next page for complete Liquid End specifications and selection.

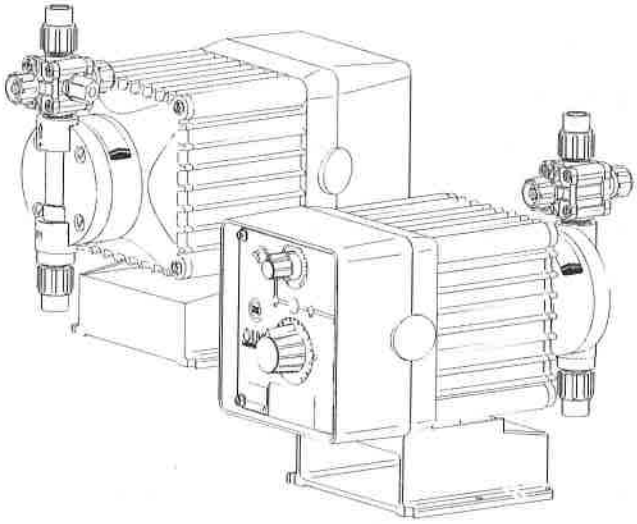

Dimensions

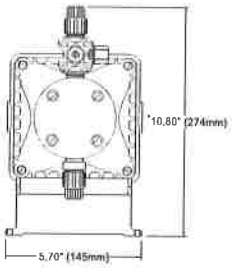

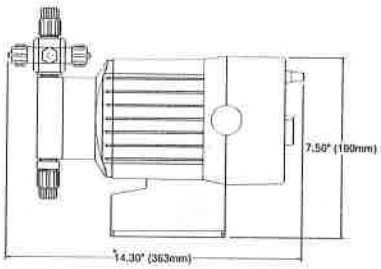

*DIMENSIONS SHOWN ARE MAXIMUM FOR LARGEST LIQUID END AVAILABLE. THESE DIMENSIONS VARY DEPENDING ON THE LIQUID END SELECTED.

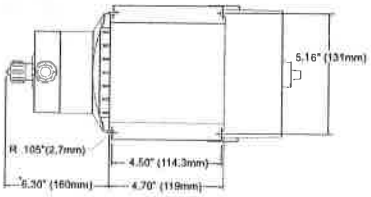

Specifications

Series	Strokes Per Minute (Adjustable) Min	Max	Stroke Length (Adjustable) Recommended Minimum	Average Input Power @ Max Speed	Shipping Weight
B11, B71, B91† B12, B72, B92† B13, B73, B93† B14, B74, B94†	1	100	10%	29 watts	15 lbs (6.9 kg)

† Series B9 pumps may be programmed for strokes per hour for lower outputs.

LMI MILTON ROY

8 Post Office Square
Acton, MA 01720 USA
TOLL FREE: (800) 564-1097
TEL: (978) 263-9800
FAX: (978) 264-9172
http://www.lmipumps.com

Replaces same of Rev. G 2/98
1417. H 4/02

Configuration Data & Materials of Construction

Drive Assembly	Liquid End No.	Size Code	Materials of Construction				Accessory	Tubing & Connections	
			Head & Fittings	Balls	Liquifram™	Check Valve		Discharge	Suction
	498SI†	0.9	PVC / PVC	Ceramic	Fluorofilm™	PVDF / Polyprel®	4FV	PE .375" O.D.	
B92 ■ -	490SI†	0.9	Acrylic / PVC	Ceramic	Fluorofilm™	PVDF / Polyprel®	4FV	PE .375" O.D.	
B91 ■ -	490FI	0.9	Acrylic / PVDF	Ceramic	Fluorofilm™	PVDF / Polyprel®	4FV	PE .375" O.D.	
B72 ■ -	398SI†	0.9	PVC / PVC	Ceramic	Fluorofilm™	PVDF / Polyprel®	4FV	PE .375" O.D.	
B71 ■ -	393SI†	0.9	PVDF / PVDF	Ceramic	Fluorofilm™	PVDF / PTFE	4FV	PE .375" O.D.	
B12 ■ -	392SI†	0.9	PVDF / PVDF	Ceramic	Fluorofilm™	PVDF / Polyprel®	4FV	PE .375" O.D.	
B11 ■ -	85HV	0.9	Polypropylene	316 S.S.	Fluorofilm™	PTFE		PE .5" O.D.	Vinyl .938" O.D.
	86HV	0.9	Acrylic / PP	316 S.S.	Fluorofilm™	Hypalon®		PE .5" O.D.	Vinyl .938" O.D.
	89	0.9	UHMW PE	Ceramic	Hypalon®	Hypalon®		PE .5" O.D.	Vinyl .500" O.D.
	95S**	0.9	Polypropylene	Ceramic	Fluorofilm™	PTFE	4FV	PE .375" O.D.	
	297	0.9	316 S.S.	316 S.S.	Fluorofilm™	316 S.S.		Pipe 1/4" NPT M	
	468SI†	1.8	PVC / PVC	Ceramic	Fluorofilm™	PVDF / Polyprel®	4FV	PE .375" O.D.	
	460SI†	1.8	Acrylic / PVC	Ceramic	Fluorofilm™	PVC / Polyprel®	4FV	PE .375" O.D.	
	460FI	1.8	Acrylic / PVDF	Ceramic	Fluorofilm™	PVDF / Polyprel®	4FV	PE .375" O.D.	
	368SI†	1.8	PVC / PVC	Ceramic	Fluorofilm™	PVC / Polyprel®	4FV	PE .375" O.D.	
	363SI†	1.8	PVDF / PVDF	Ceramic	Fluorofilm™	PVDF / PTFE	4FV	PE .375" O.D.	
B93 ■ -	362SI†	1.8	PVDF / PVDF	Ceramic	Fluorofilm™	PVDF / Polyprel®	4FV	PE .375" O.D.	
B73 ■ -	75HV	1.8	Polypropylene	316 S.S.	Fluorofilm™	PTFE		PE .5" O.D.	Vinyl .938" O.D.
B13 ■ -	75S**	1.8	Polypropylene	Ceramic	Fluorofilm™	PTFE	4FV	PE .5" O.D.	
	76HV	1.8	Acrylic / PP	316 S.S.	Fluorofilm™	Hypalon®		PE .5" O.D.	Vinyl .938" O.D.
	79	1.8	UHMW PE	Ceramic	Hypalon®	Hypalon®		PE .5" O.D.	Vinyl .500" O.D.
	277	1.8	316 S.S.	316 S.S.	Fluorofilm™	316 S.S.		Pipe 1/4" NPT M	
	418SI†	3.0	PVC / PVC	Ceramic	Fluorofilm™	PVC / Polyprel®	4FV	PE .5" O.D.	
	410SI†	3.0	Acrylic / PVC	Ceramic	Fluorofilm™	PVC / Polyprel®	4FV	PE .5" O.D.	
	410FI	3.0	Acrylic / PVDF	.375 PTFE	Fluorofilm™	PVDF / Polyprel®	4FV	PE .5" O.D.	
	318SI†	3.0	PVC / PVC	Ceramic	Fluorofilm™	PVC / Polyprel®	4FV	PE .5" O.D.	
B94 ■ -	312SI†	3.0	PVDF / PVDF	Ceramic	Fluorofilm™	PVDF / Polyprel®	4FV	PE .5" O.D.	
B74 ■ -	313SI†	3.0	PVDF / PVDF	Ceramic	Fluorofilm™	PVDF / PTFE	4FV	PE .5" O.D.	
B14 ■ -	15S**	3.0	Polypropylene	Ceramic	Fluorofilm™	PTFE	4FV	PE .5" O.D.	
	217	3.0	316 S.S.	316 S.S.	Fluorofilm™	316 S.S.		Pipe 1/4" NPT M	

■ See front page for voltage code specifications.

** These Liquid Ends are available without a 4FV.

† To specify ¼" NPT male, change 'I' to 'P'. To specify black, UV resistant tubing, change 'I' to 'U'. To specify Bleed 4FV, change 'S' to 'B'. To specify 3FV, change 'S' to'T'.

3FV Indicates that the pump is equipped with an LMI Three Function Valve (pressure relief, priming aid, line drain).

4FV Indicates that the pump is equipped with an LMI Four Function Valve. This diaphragm type anti-syphon/pressure relief valve is installed on the pump head. It provides anti-syphon protection and aids in priming, even under pressure.

Fluorofilm™ is a copolymer of PTFE and PFA.
Polyprel® is an elastomeric PTFE copolymer.

Polyprel is a registered trademark of Liquid Metronics Incorporated. Fluorofilm is a trademark of Liquid Metronics Incorporated. Hypalon is a registered trademark of E. I. du Pont de Nemours & Co., Inc.

Output Information

Series	Gallons per Hour* Min	Max	Liters per Hour* Min	Max	mL/cc per Minute* Min	Max	mL/cc per Stroke Min	Max	Maximum Injection Pressure
B11, B71, B91†	0.002	1.6	0.006	6.1	0.10	101	0.10	1.01	150 psi (10.30 Bar)
B12, B72, B92†	0.003	2.5	0.009	9.5	0.16	158	0.16	1.58	100 psi (6.90 Bar)
B13, B73, B93†	0.005	4.5	0.017	17.0	0.28	284	0.28	2.84	50 psi (3.50 Bar)
B14, B74, B94†	0.007	7.0	0.027	26.5	0.44	442	0.44	4.42	30 psi (2.07 Bar)

*Minimum output is based on one (1) stroke per minute and 10% stroke setting, minimum output can be reduced further in external mode.

†Series B9 pumps may be programmed for strokes per hour for lower outputs.

© 2002 LMI Milton Roy - All Rights Reserved
Printed in USA
Specifications subject to change without notice.

Specification **Sheet**

Series B

GENERAL

Chemical metering pumps shall be positive displacement, Liquifram™ type pumps that are UL and CUL approved. Output volume shall be adjustable while pumps are in operation from zero to maximum capacity of:

B11, B71, B91 - 1.6 GPH (6.1 liters per hour)
B12, B72, B92 - 2.5 GPH (9.5 liters per hour)
B13, B73, B93 - 4.5 GPH (17.0 liters per hour)
B14, B74, B94 - 7.0 GPH (26.5 liters per hour)

Chemical metering pumps shall be capable, without a hydraulically backed diaphragm, of injecting solutions against pressures up to:

B11, B71, B91 - 150 psig(10.3 bar)
B12, B72, B92 - 100 psig(6.9 bar)
B13, B73, B93 - 50 psig(3.4 bar)
B14, B74, B94 - 30 psig(2.1 bar)

SERIES B1

Adjustment shall be by means of readily accessible dial knobs, one for changing stroke length and the other for changing stroke frequency. Both knobs are to be located opposite the liquid handling end.

SERIES B7

Control of Series B7 metering pumps shall be selectable between internal and external pulsing by means of a 3-position center-off switch. Stroke length shall be adjustable by means of readily accessible dial knob. When in external pulsed mode, Series B7 units shall accept signals without the use of electrical timer or internal timer. Pressure capacity shall be adjustable to reduce noise, vibration and wear.

SERIES B9

Series B9 metering pumps shall have a clear liquid crystal display. Control shall be selectable between internal and external pulsing by means of a tactile keypad. Internal stroke frequency shall be adjustable from 1 stroke per hour to 100 strokes per minute. Pressure capacity shall be keypad adjustable to reduce noise, vibration and wear. Metering pump shall be capable of dividing or multiplying pulse inputs from 1 to 999 or responding directly or inversely to a 4-20mA input signal.

DRIVE

The pump drive shall be totally enclosed with no exposed moving parts. Solid state electronic pulser shall be fully encapsulated and supplied with quick connect terminals at least 3/16" (4.75 mm) wide. Electronics shall be housed in chemical resistant enclosure at the rear of the pump for maximum protection against chemical spillage. Electrical power consumption shall not exceed 29 watts per hour under full speed and maximum pressure conditions. Pump weight shall not exceed 15 lbs (6.9 kg).

AUTOMATIC PRESSURE RELIEF

To eliminate need for pressure relief valve, Liquifram™ shall automatically stop pulsating when discharge pressure exceeds pump pressure rating by not more than 35%.

MATERIAL

Chemical metering pump housing shall be of chemically resistant glass fiber reinforced thermoplastic. All exposed fasteners shall be stainless steel. Chemical metering pump valves shall be ball type, with ceramic balls[1]. Valve seat and seal ring shall be renewable by replacing the combination seat-seal ring[2] or cartridge valve assembly. Pump head shall be of transparent acrylic[3] material capable of resisting the pumped chemical. Fittings and connections at pump head shall be PVC[4].

CHECK VALVES AND TUBING

A total of 16 ft (4.8 m) of polyethylene tubing[5] shall be provided per pump complete with compression connections. A foot valve with integral one piece strainer shall be provided for the suction line, and an injection/back pressure check valve with ½" NPT male connection for the injection point. The injection check valve shall incorporate a dilating orifice which prohibits scale formation and accumulation of crystalline deposits.

Notes:

1. Type 316 stainless steel or PTFE may be specified.
2. Hypalon®, PTFE or Polyprel® may be specified.
3. PVDF, PVC, Polypropylene, or Type 316 stainless steel may be specified.
4. PVDF, Polypropylene, or Type 316 stainless steel may be specified.
5. 6 ft (1.8 m) of vinyl suction tubing may be specified in place of polyethylene for the suction side only. 1/4" or 1/2" pipe thread may be specified.

LMI MILTON ROY

8 Post Office Square
Acton, MA 01720 USA
TEL: (978) 263-9800
FAX: (978) 264-9172
http://www.lmipumps.com

ISO9001

Replaces same of Rev. F 7/96
1034. G 12/99

B Series

LE Codes	W	X	Y	Z
71T, 72T, 75T, 81T, 82T, 85T	3.25 (82.5mm)	8.5 (216.0mm)	.65 (16.5mm)	10.70 (271.8mm)
71S, 72S, 75S 81S, 82S, 85S	4.55(115.6mm)	9.7 (246.5mm)	.65 (16.5mm)	12.00 (304.8mm)
74, 94	3.25 (82.5mm)	8.5 (216.0mm)	.65 (16.5mm)	10.70 (271.8mm)
76, 86	3.55 (90.2mm)	9.5 (241.3mm)	.65 (16.5mm)	11.00 (279.4mm)
77, 97	3.25 (82.5mm)	8.5 (216.0mm)	.65 (16.5mm)	10.70 (271.8mm)
91T, 92T, 95T	3.25 (82.5mm)	8.5 (216.0mm)	.65 (16.5mm)	10.70 (271.8mm)
91S, 91FS 92S, 95S	4.55(115.6mm)	9.7 (246.5mm)	.65 (16.5mm)	12.00 (304.8mm)

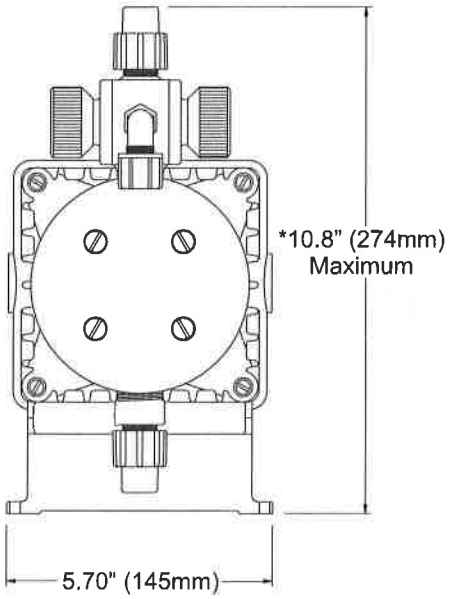

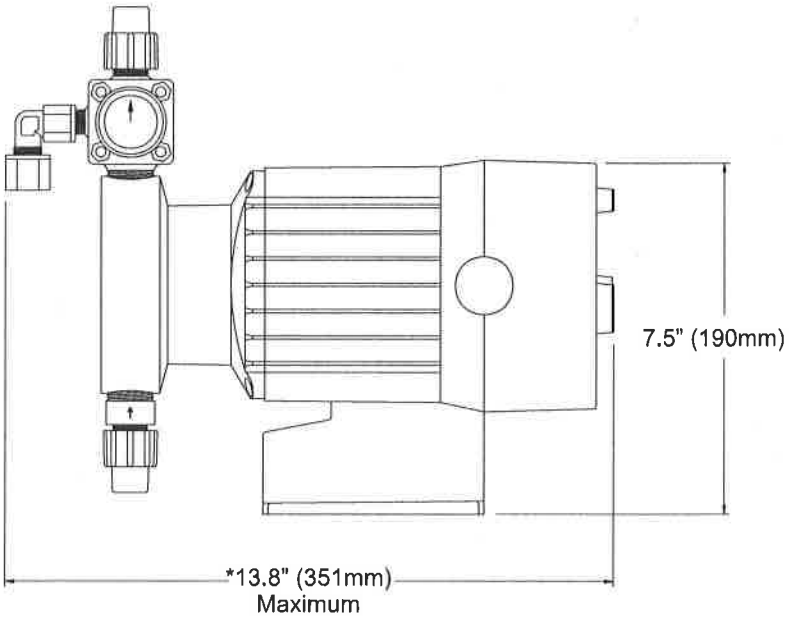

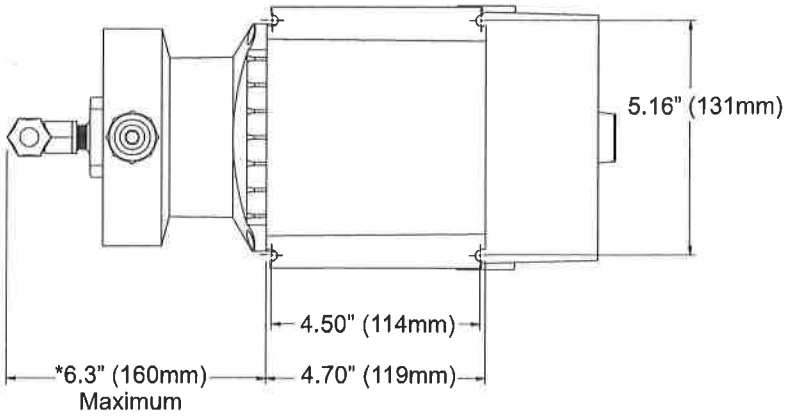

*Dimensions shown are maximum for largest liquid end available.These dimensions vary depending on the liquid end selected.

© 1999 LMI Milton Roy - All Rights Reserved
Printed in USA
Specifications subject to change without notice.

Polyprel is a registered trademark of Liquid Metronics Incorporated.
Liquifram, Liquitron, Micropace are trademarks of Liquid Metronics Incorporated.
Hypalon and Viton are registered trademarks of E. I. du Pont de Nemours & Co., Inc.

Data Sheet

Series C
Electronic Metering Pumps

Configuration Data

Model C92 1 - 363SI

Control & Output Code

Manual Control

Speed (stroking frequency) and stroke length manually adjustable.

C10 — 1.3 GPH (4.9 l/h) ... 300 psi (20.7 Bar)
C11 — 2.5 GPH (9.5 l/h) ... 150 psi (10.3 Bar)
C12 — 4.0 GPH (15.1 l/h) ... 100 psi (6.9 Bar)
C13 — 8.0 GPH (30 l/h) ..... 60 psi (4.1 Bar)
C14 — 20 GPH (76 l/h) ..... 25 psi (1.7 Bar)

Instrument Responsive/Manual Control

Manual adjustment features of C1 Series plus switch conversion to external control for automatic systems.

C70 — 1.3 GPH (4.9 l/h) ... 300 psi (20.7 Bar)
C71 — 2.5 GPH (9.5 l/h) ... 150 psi (10.3 Bar)
C72 — 4.0 GPH (15.1 l/h) ... 100 psi (6.9 Bar)
C73 — 8.0 GPH (30 l/h) ..... 60 psi (4.1 Bar)
C74 — 20 GPH (76 l/h) ..... 25 psi (1.7 Bar)
C76 — 4.0 GPH (15.1 l/h) .... 175 psi (12.1 Bar)
C77 — 10 GPH (38 l/h) ..... 80 psi (5.5 Bar)
C78 — 25 GPH (95 l/h) ..... 30 psi (2.07 Bar)
C90 — 1.3 GPH (4.9 l/h) .... 300 psi (20.7 Bar)
C91 — 2.5 GPH (9.5 l/h) .... 150 psi (10.3 Bar)
C92 — 4.0 GPH (15.1 l/h) .... 100 psi (6.9 Bar)
C93 — 8.0 GPH (30 l/h) ..... 60 psi (4.1 Bar)
C94 — 20 GPH (76 l/h) ..... 25 psi (1.7 Bar)

Voltage Code

1 — 120 VAC US Plug
2 — 240 VAC US Plug
3 — 220-240 VAC DIN Plug
5 — 240-250 VAC, UK Plug
6 — 240-250 VAC, AUST/NZ Plug
7 — 220-240 VAC, SWISS Plug

Liquid End

See next page for complete liquid end specifications and selection.

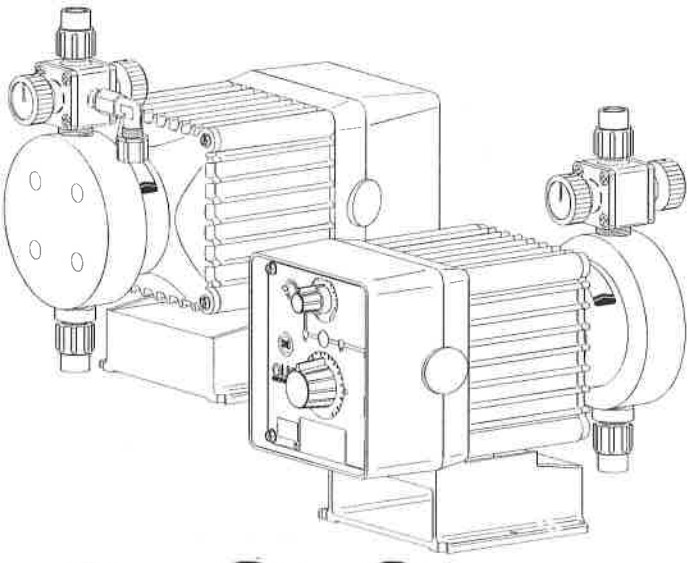

Specifications

Series	Strokes Per Minute (Adjustable) Min	Max	Stroke Length (Adjustable) Recommended Minimum	Average Input Power @Max Speed	Shipping Weight
C10, C70, C90 C11, C71, C91 C12, C72, C92 C13, C73, C93 C14, C74, C94	1	100	10%	44 watts	20 lbs (9.1 kg)
C76 C77 C78	1	100	10%	87 watts	28 lbs (12.7 kg)

Dimensions

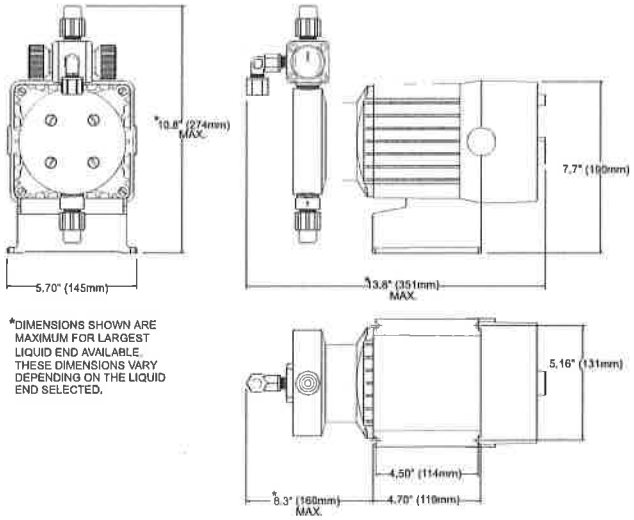

*DIMENSIONS SHOWN ARE MAXIMUM FOR LARGEST LIQUID END AVAILABLE. THESE DIMENSIONS VARY DEPENDING ON THE LIQUID END SELECTED.

LMI MILTON ROY

Florida Water Processing
http://www.watertreatmentsupply.com
800-783-4397

Polypre® is a registered trademark of Liquid Metronics Incorporated. Flourofilm and Liquifram are trademarks of Liquid Metronics Incorporated.
Hypalon and Viton are registered trademarks of E. I. du Pont de Nemours & Co., Inc.
© 2001 LMI Milton Roy - All Rights Reserved
Printed in USA

Replaces same of Rev.D 10/99
1712.E 11/01

Configuration Data & Materials of Construction

Drive Assembly	Liquid End No.	Size Code	Materials of Construction: Head & Fittings	Balls	Liquifram™	Check Valve	Accessory	Tubing & Connections: Discharge	Suction
C90 ▩ -	498SP	0.9	PVC	Ceramic	Fluorofilm™	PTFE	4FV	Pipe 1/4" NPT M	
C70 ▩ -	297	0.9	316 S.S.	316 S.S.	Fluorofilm™	316 S.S.		Pipe 1/4" NPT M	
C10 ▩ -									
	468SI	1.8	PVC / PVC	Ceramic	Fluorofilm™	PVDF / Polyprel®	4FV	PE .375" O.D.	
	460SI†	1.8	Acrylic / PVC	Ceramic	Fluorofilm™	PVDF / Polyprel®	4FV	PE .375" O.D.	
	460FI	1.8	Acrylic / PVC	PTFE	Fluorofilm™	PVDF / Polyprel®	4FV	PE .375 O.D.	
	368SI†	1.8	PVC / PVC	Ceramic	Fluorofilm™	PVDF / Polyprel®	4FV	PE .375" O.D.	
C92 ▩ -	362SI†	1.8	PVDF / PVDF	Ceramic	Fluorofilm™	PVDF / Polyprel®	4FV	PE .375" O.D.	
C91 ▩ -	363SI†	1.8	PVDF / PVDF	Ceramic	Fluorofilm™	PVDF / PTFE	4FV	PE .375" O.D.	
C72 ▩ -	75HV	1.8	Polypropylene	316 S.S.	Fluorofilm™	PTFE		PE .5" O.D.	Vinyl .938" O.D.
C71 ▩ -	75S*	1.8	Polypropylene	Ceramic	Fluorofilm™	PTFE	4FV	PE .5" O.D.	
C12 ▩ -	76HV	1.8	Acrylic/PP	316 S.S.	Fluorofilm™	Hypalon®		PE .5" O.D.	Vinyl .938" O.D.
C11 ▩ -	79	1.8	UHMW PE	Ceramic	Hypalon®	Hypalon®		PE .5" O.D.	Vinyl .5" O.D.
	277	1.8	316 S.S.	316 S.S.	Fluorofilm™	316 S.S.		Pipe 1/4" NPT M	
	418SI#	3.0	PVC / PVC	Ceramic	Fluorofilm™	PVDF / Polyprel®	4FV	PE .5" O.D.	
	410SI†#	3.0	Acrylic / PVC	Ceramic	Fluorofilm™	PVDF / Polyprel®	4FV	PE .5" O.D.	
	410FI†#	3.0	Acrylic / PVC	PTFE	Fluorofilm™	PVDF / Polyprel®	3FV	PE .5" O.D.	
C93 ▩ -	318SI†#	3.0	PVC / PVC	Ceramic	Fluorofilm™	PVDF / Polyprel®	4FV	PE .5" O.D.	
C73 ▩ -	313SI†#	3.0	PVDF / PVDF	Ceramic	Fluorofilm™	PVDF / PTFE	4FV	PE .5" O.D.	
C13 ▩ -	312SI†#	3.0	PVDF / PVDF	Ceramic	Fluorofilm™	PVDF / Polyprel®	4FV	PE .5" O.D.	
	20HV	3.0	Acrylic / PP	316 S.S.	Fluorofilm™	Hypalon®		PE .5" O.D.	Vinyl .938" O.D.
	22	3.0	PVDF	Ceramic	Fluorofilm™	PTFE		PE .5" O.D.	
	22P	3.0	PVDF	Ceramic	Fluorofilm™	PTFE		Pipe 1/2" NPT M	
	24	3.0	PVC	Ceramic	Fluorofilm™	PTFE		Pipe 1/2" NPT M	
	25HV	3.0	Polypropylene	316 S.S.	Fluorofilm™	PTFE		PE .5" O.D.	Vinyl .938" O.D.
	25P	3.0	Polypropylene	Ceramic	Fluorofilm™	PTFE		Pipe 1/2" NPT M	
	25T	3.0	Polypropylene	Ceramic	Fluorofilm™	PTFE		PE .5" O.D.	
	27	3.0	316 S.S.	316 S.S.	Fluorofilm™	PTFE		Pipe 1/2" NPT M	
	29	3.0	UHMW PE	Ceramic	Fluorofilm™	Hypalon®		PE .5" O.D.	
	30	6.0	Acrylic/PVC	Ceramic	Fluorofilm™	PTFE		PE .5" O.D	Vinyl .5" O.D.
	32	6.0	PVDF	Ceramic	Fluorofilm™	PTFE		PE .5" O.D.	
C94 ▩ -	32P	6.0	PVDF	Ceramic	Fluorofilm™	PTFE		Pipe 1/2" NPT M	
C78 ▩ -	34	6.0	PVC	Ceramic	Fluorofilm™	PTFE		Pipe 1/2" NPT M	
C74 ▩ -	35P	6.0	Polypropylene	Ceramic	Fluorofilm™	PTFE		Pipe 1/2" NPT M	
C14 ▩ -	35T	6.0	Polypropylene	Ceramic	Fluorofilm™	PTFE		PE .5" O.D.	
	36	6.0	PVC	Ceramic	Fluorofilm™	PTFE		PE .5" O.D.	
	37	6.0	316 S.S.	316 S.S.	Fluorofilm™	PTFE		Pipe 1/2" NPT M	
	468SP	1.8	PVC/PVC	Ceramic	Fluorofilm™	PVDF / Polyprel®	4FV	PE .375" O.D.	
C76 ▩ -	74S	1.8	Polypropylene	Ceramic	Fluorofilm™	PTFE	4FV	Pipe 1/4" NPT M	
	277	1.8	316 S.S.	316 S.S.	Fluorofilm™	316 S.S.		Pipe 1/4" NPT M	
	20HV	3.0	Acrylic/PP	316 S.S.	Fluorofilm™	Hypalon®		PE .5" O.D.	Vinyl .938" O.D.
	20S**	3.0	Acrylic/PVC	Ceramic	Fluorofilm™	Hypalon®	4FV	PE .5" O.D.	Vinyl .5" O.D.
	22	3.0	PVDF	Ceramic	Fluorofilm™	PTFE		Pipe 1/2" NPT M	
	22P	3.0	PVDF	Ceramic	Fluorofilm™	PTFE	4FV	Pipe 1/2" NPT M	
C77 ▩ -	24	3.0	PVC	Ceramic	Fluorofilm™	PTFE		Pipe 1/2" NPT M	
	25HV	3.0	Polypropylene	316 S.S.	Fluorofilm™	PTFE		PE .5" O.D.	Vinyl .938" O.D.
	25P	3.0	Polypropylene	Ceramic	Fluorofilm™	PTFE		Pipe 1/2" NPT M	
	25T	3.0	Polypropylene	Ceramic	Fluorofilm™	PTFE		PE .5" O.D.	
	26S**	3.0	PVC	Ceramic	Fluorofilm™	Viton®	4FV	PE .5" O.D.	
	27	3.0	316 S.S.	316 S.S.	Fluorofilm™	PTFE		Pipe 1/2" NPT M	
	29	3.0	UHMW PE	Ceramic	Fluorofilm™	Hypalon®		PE .5" O.D.	

▩ See front page for voltage code specifications.
**These Liquid Ends are available without a 4FV, simply drop the 'S' at the end of the Liquid End number to order the model without a 4FV.
#These liquid ends use 3/8" diameter balls. Pump output may be reduced in some applications.

†To specify ¼" NPT male, change 'I' to 'P'. To specify black, UV resistant tubing, change 'I' to 'U'. To specify Bleed 4FV, change 'S' to 'B'. To specify 3FV, change 'S' to'T'.
Fluorofilm™ is a copolymer of PTFE and PFA.
Polyprel® is an elastomeric PTFE copolymer.

4FV Indicates that the pump is equipped with an LMI Four Function Valve. This diaphragm type anti-syphon/pressure relief valve is installed on the pump head. It provides anti-syphon protection and aids in priming, even under pressure.

Output Information

Series	Gallons per Hour Min	Gallons per Hour Max	Liters per Hour Min	Liters per Hour Max	mL/cc per Minute Min	mL/cc per Minute Max	mL/cc per Stroke Min	mL/cc per Stroke Max	Maximum Injection Pressure
C10, C70*, C90*	0.001	1.3	0.005	4.9	0.08	82	0.08	0.82	300 psi (20.7 Bar)
C11, C71*, C91*	0.003	2.5	0.010	9.5	0.16	158	0.16	1.58	150 psi (10.3 Bar)
C12, C72*, C92*	0.004	4.0	0.015	15.1	0.25	252	0.25	2.52	100 psi (6.9 Bar)
C13, C73*, C93*	0.008	8.0	0.030	30.0	0.51	505	0.51	5.05	60 psi (4.1 Bar)
C14, C74*, C94*	0.020	20.0	0.076	76.0	1.26	1262	1.26	12.62	25 psi (1.7 Bar)
C76*	0.004	4.0	0.015	15.1	0.25	252	0.25	2.52	175 psi (12.1 Bar)
C77*	0.010	10.0	0.038	38.0	0.63	631	0.63	6.31	80 psi (5.5 Bar)
C78*	0.025	25.0	0.095	95.0	1.58	1577	1.58	15.77	30 psi (2.07 Bar)

* Minimum output is based on 1 stroke per minute and 10% stroke setting, minimum output can be reduced further in external mode. Series C9 pumps may be programmed for strokes per hour for lower outputs.

Specification Sheet

Series C

GENERAL

Chemical metering pumps shall be positive displacement, Liquifram™ type pumps that are UL and CUL approved. Output volume shall be adjustable while pumps are in operation from zero to maximum capacity of:

C10, C70; C90	- 1.3 GPH	(4.9 liters per hour)
C11, C71, C91	- 2.5 GPH	(9.5 liters per hour)
C12, C72, C92	- 4.0 GPH	(15.1 liters per hour)
C13, C73, C93	- 8.0 GPH	(30.0 liters per hour)
C14, C74, C94	- 20.0 GPH	(75.7 liters per hour)
C76*	- 4.0 GPH	(15.1 liters per hour)
C77*	- 10.0 GPH	(38.0 liters per hour)
C78*	- 25.0 GPH	(95.0 liters per hour)

Chemical metering pumps shall be capable, without a hydraulically backed diaphragm, of injecting solutions against pressures up to:

C10, C70, C90	- 300 psig	(20.7 bar)
C11, C71, C91	- 150 psig	(10.3 bar)
C12, C72, C92	- 100 psig	(6.9 bar)
C13, C73, C93	- 60 psig	(4.1 bar)
C14, C74, C94	- 25 psig	(1.7 bar)
C76*	- 175 psig	(12.1 bar)
C77*	- 80 psig	(5.5 bar)
C78*	- 30 psig	(2.1 bar)

TYPE C1

Adjustment shall be by means of readily accessible dial knobs, one for changing stroke length and the other for changing stroke frequency (speed). Both knobs are to be located opposite the liquid handling end.

TYPE C7

Control of Series C7 metering pumps shall be selectable between internal and external pulsing by means of a 3-position center-off switch. Stroke length shall be adjustable by means of readily accessible dial knob. When in external pulsed mode, Series C7 units shall accept signals without the use of electrical timer or internal timer. Pressure capacity shall be adjustable to reduce noise, vibration and wear.

TYPE C9

Series C9 metering pumps shall have a clear liquid crystal display. Control shall be selectable between internal and external pulsing by means of a tactile keypad. Internal stroke frequency shall be adjustable from 1 stroke per hour to 100 strokes per minute. Pressure capacity shall be keypad adjustable to reduce noise, vibration and wear. Metering pump shall be capable of dividing or multiplying pulse inputs from 1 to 999 or responding directly or inversely to a 4-20mA input signal.

DRIVE

The pump drive shall be totally enclosed with no exposed moving parts. Solid state electronic pulser shall be encapsulated and supplied with quick connect terminals at least 3/16" (4.75 mm) wide. Electronics shall be housed in chemical resistant enclosure at the rear of the pump for maximum protection against chemical spillage. Electrical power consumption shall not exceed 87 watts under full speed and maximum pressure conditions. Pump weight shall not exceed 28 lbs (12.7 kg).

AUTOMATIC PRESSURE RELIEF

To eliminate need for pressure relief valve, Liquifram™ shall automatically stop pulsating when discharge pressure exceeds pump pressure rating by not more than 35%.

MATERIAL

Chemical metering pump housing shall be of chemically resistant glass fiber reinforced thermoplastic with a glass fiber reinforced polypropylene EPU carrier[1]. All exposed fasteners shall be stainless steel. Chemical metering pump valves shall be ball type, with ceramic balls[2]. Valve seat and seal ring shall be renewable by replacing the combination seat-seal ring[3] or cartridge valve assembly. Pump head shall be of transparent acrylic[4] material capable of resisting the pumped chemical. Fittings and connections at pump head shall be PVC[5].

CHECK VALVES AND TUBING

A total of 16 ft (4.8 m) of polyethylene tubing[6] shall be provided per pump complete with compression connections. A foot valve with integral one piece strainer shall be provided for the suction line, and an injection check/back pressure valve with ½" NPT male connection for the injection point. The injection check valve shall incorporate a dilating orifice which prohibits scale formation and accumulation of crystalline deposits.

(* - Not UL or CUL Approved)

Notes:

1. With plastic coated cast iron EPU carrier for Series C 76, C77 and C78.
2. Type 316 stainless steel or PTFE may be specified.
3. Hypalon®, PTFE, Viton® or Polyprel® may be specified.
4. PVC, Polypropylene, PDVF or Type 316 stainless steel may be specified.
5. PVDF, Polypropylene, or Type 316 stainless steel may be specified.
6. 6 ft. (1.8 m) of vinyl suction tubing may be specified in place of polyethylene for the suction side only. 1/4" or 1/2" male pipe thread may be specified.

LMI MILTON ROY

201 Ivyland Road
Ivyland, PA 18974 USA
TOLL FREE: (800) 564-1097
TEL: (215) 293-0401
FAX: (215) 293-0445
http://www.lmipumps.com

Replaces same of Rev.E 8/05
1619. F 11/06

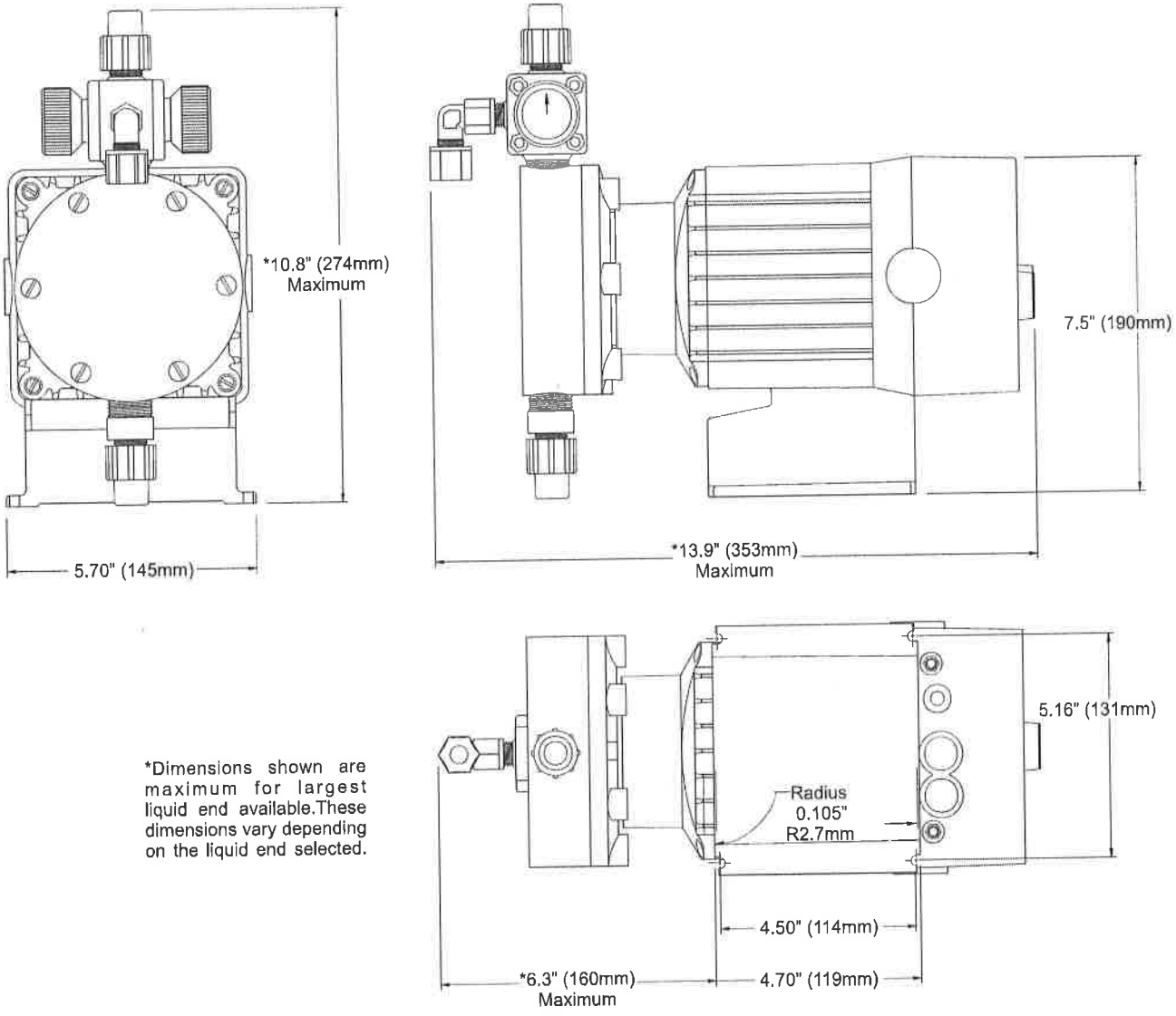

*Dimensions shown are maximum for largest liquid end available.These dimensions vary depending on the liquid end selected.

© 2005 LMI Milton Roy - All Rights Reserved
Printed in USA
Specifications subject to change without notice.

Polyprel is a registered trademark of Liquid Metronics Incorporated
Liquifram is a trademark of Liquid Metronics Incorporated
Hypalon and Viton are registered trademarks of E. I. du Pont de Nemours & Co., Inc.

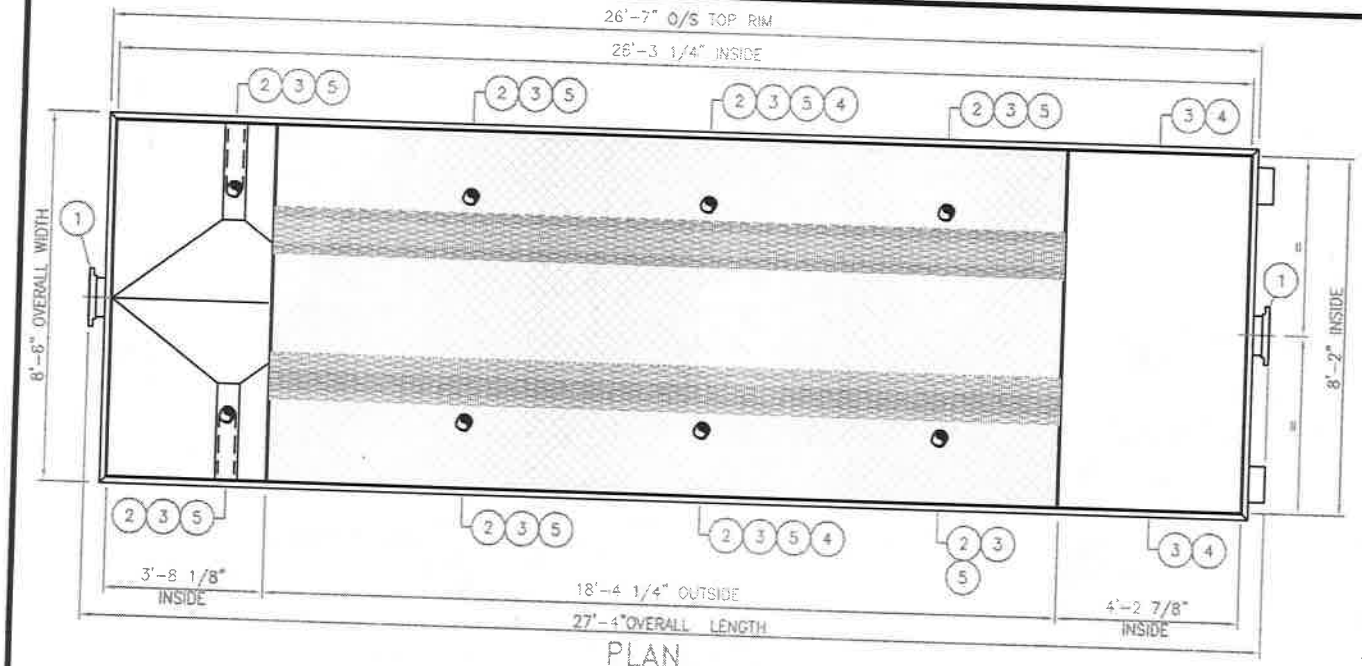

PLAN

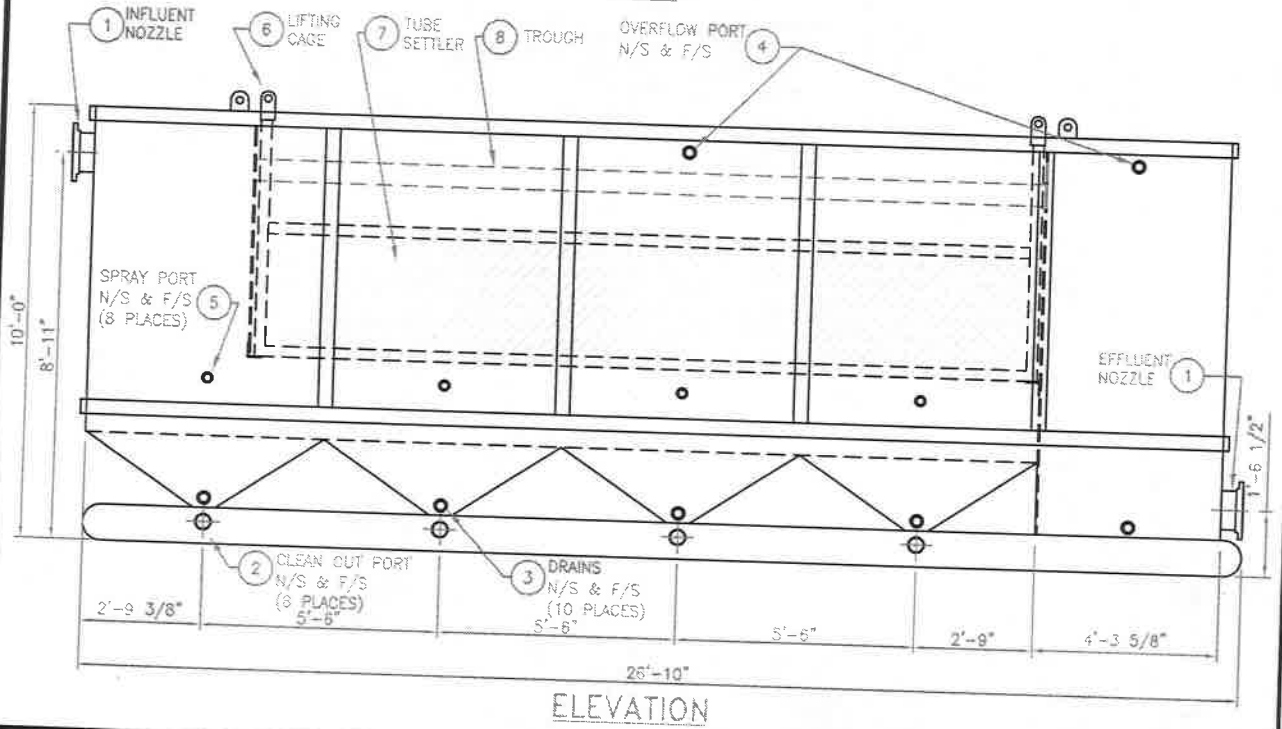

ELEVATION

#	QTY.	DESCRIPTION
1	2	INFLUENT/EFFLUENT NOZZLE W/ 10" 150LB FLG.
2	8	CLEAN OUT PORT W/ 4" NPT PIPE
3	8	DRAIN PORT, W/ 2" CUPL'G FNPT
4	4	OVERFLOW PORT, W/ 2" CUPL'G FNPT
5	8	SPRAY PORT, W/ 1" CUPL'G FNPT
6	1	PACKING REMOVAL CAGE
7	1	41 INCH DEEP TUBE SETTLER
8	2	OVERFLOWN TROUGH

GENERAL NOTES:

DESIGN DATA

- ATMATSPHERIC PRESSURE VESSEL
- TEMP. RATED @ 150 DEG. F.

- DESIGN FLOW RATE: 400 GPM
- MAXIMUM FLOW RATE: 400 GPM

MATERIAL OF CONSTRUCTION

- CARBON STEEL GRADE A36 UNLESS NOTED OTHERWISE.

SURFACE FINISH

- INTERIOR SANDBLASTED TO SSPC-SP-5 WHITE METAL FINISH AND COTED WITH POLYAMIDE EPOXY COATING BY "BENJAMIN MOORE & CO (INDUSTRIAL GRAY).

- EXTERIOR ARE PREPARED PRIOR TO PAINTING PER SSPC-SP1 (WIRE BRUSH WITH SOLVENT WIPE) AS A MINIMIUM. IF RUST OR MILL SCALE IS PREVALENT, STRUCTURE WILL BE FINISHED WITH SSPC-SPC3 POWER TOOL CLEANING AND SOLVENT WIPE) PREPARATION AND COATED WITH PRIMER AND HIGH GRAD INDUSTRIAL COATING BY BENJAMIN MOORE & CO. (INDUSTRIAL BLUE) OR EQUAL.

LOADING

- VESSEL EMPTY: (to come) LBS.
- VESSEL FLOODED DURING OPERATION: (to come) LBS

NO.	REVISIONS	DATE
A	FOR INFORMATION ONLY	04/25/06

400 GPM CLARIFIER GENERAL SPECIFICATION

SCALE:	NONE	APPROVED:	DRAWN BY: TLo
DATE:	04/25/06		

GROUND/WATER TREATMENT & TECHNOLOGY
P.O. BOX 1174
DENVILLE, NJ 07834

FILE: 14-1000/C400-01 DRAWING NUMBER: SP-01

ACCU-PAC® TUBE SETTLERS

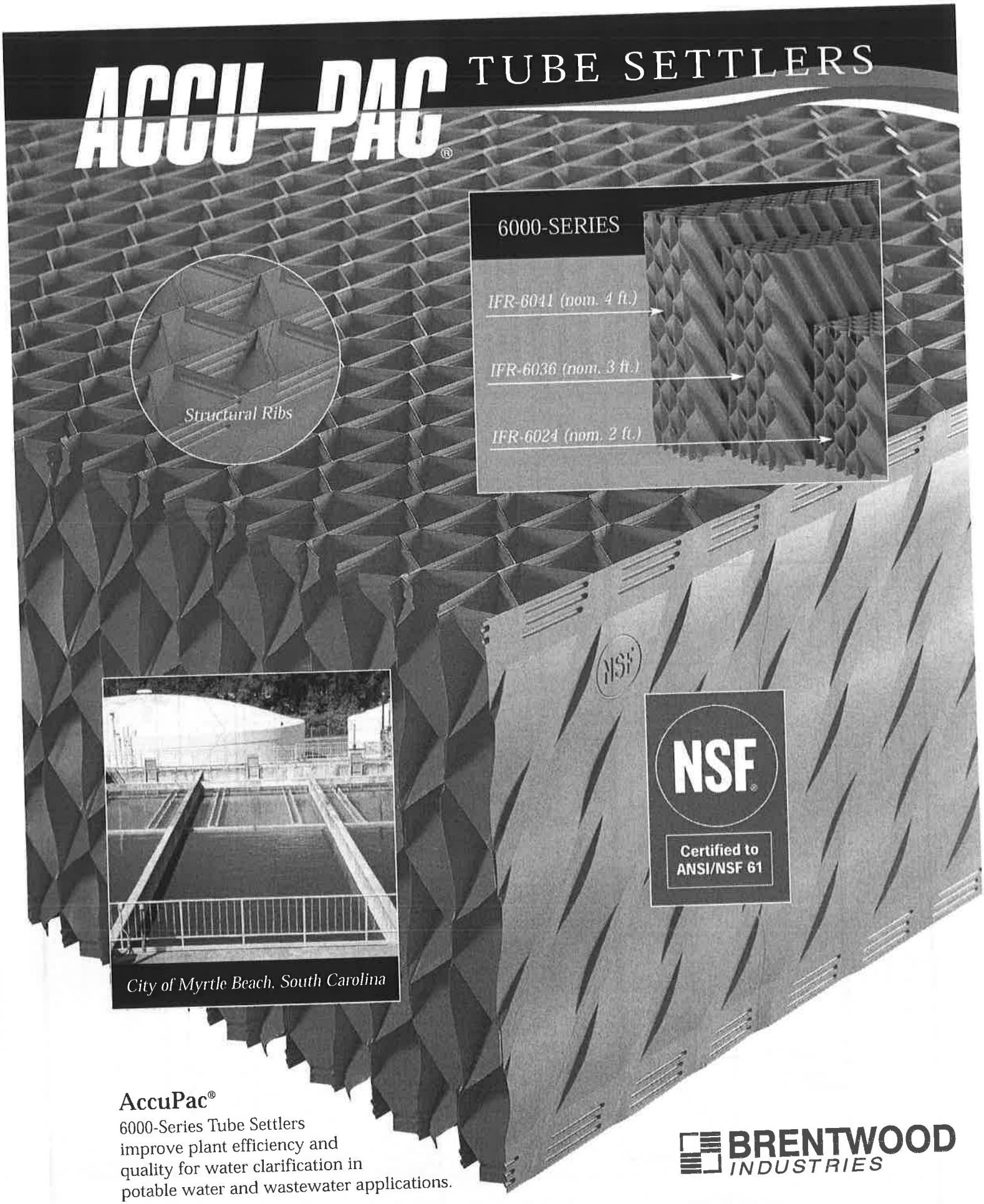

City of Myrtle Beach, South Carolina

AccuPac®
6000-Series Tube Settlers improve plant efficiency and quality for water clarification in potable water and wastewater applications.

BRENTWOOD INDUSTRIES

ACCU-PAC® TUBE SETTLERS

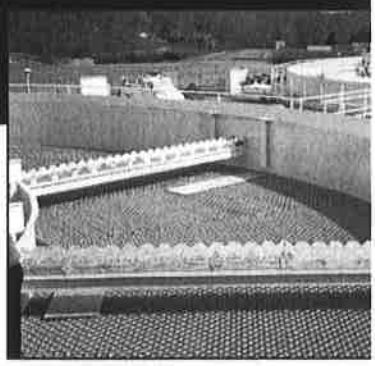

New Jersey-American Water Co.
Tinton Falls, New Jersey

AccuPac® 6000-Series Tube Settlers utilize individual, isolated tubular channels, each sloped at 60°, to expand the settling capacity of water and wastewater clariflers. Engineered with the individual tubes rising in the same direction to eliminate mixing currents and unstable flow patterns. Constructed of flame-resistant, self-extinguishing PVC that is also inert to naturally occurring constituents in water and wastewater. Potable (blue) 6000-series modules are Tested and Certified by NSF to ANSI/NSF Standard 61.

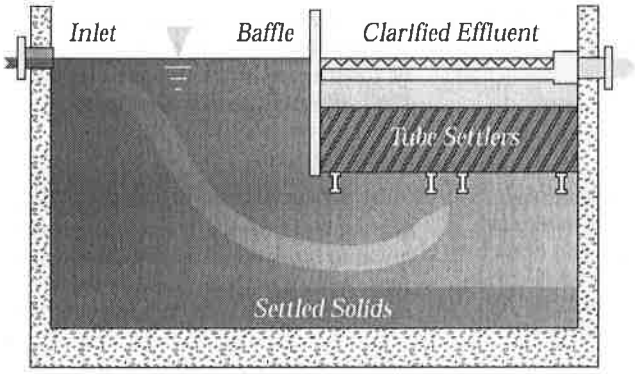

IMPROVE EFFICIENCY

The shape and configuration of 6000-series modules are engineered to minimize the Reynolds Number and to create laminar flow for rapid settling of solids. This enhanced settling reduces chemical coagulant use and downstream filter backwash requirements. For plant design and upgrading, less settling area is needed.

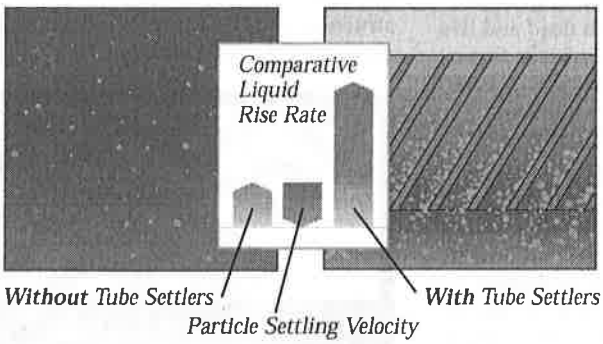

CONFIGURATIONS

For use in either circular or rectangular tanks, standard module sizes are 6, 8, 10, or 12 ft. lengths and 1 or 2 ft. widths. Other sizes available upon request. Available in both potable (blue) and non-potable (black).

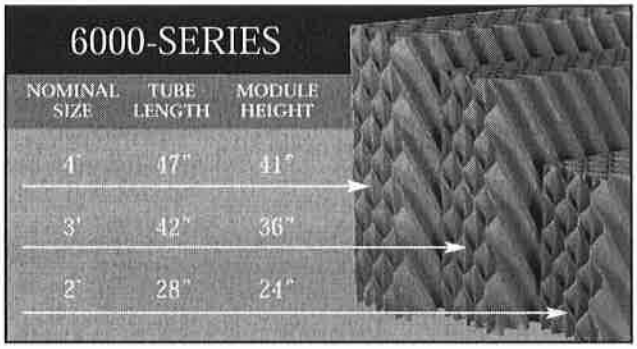

Brentwood also offers complete systems including supports, baffles, surface grating, troughs, and weirs as required for both municipal and industrial projects.

Non-metallic chain and flight sludge collection systems for rectangular clarifiers are available from our Polychem division.

NSF Certified to ANSI/NSF 61

STRUCTURAL INTEGRITY

The 6000-SeriesTube Settler modules are self-supporting and constructed of prime, rigid, UV-protected PVC. Integrated structural ribs provide substantial loading strength (maximum 250 lbs/ft²). The unique design assures a solid interface during installation. Brentwood's sheet forming and bonding processes ensure tremendous strength and long-term durability.

HIGH-TUBIDITY, HIGH RATE APPLICATIONS

3' and 4' IFR-6000 modules are particularly effective in high-turbidity, and higher rate applications

TUBE SETTLER MAXIMUM APPLICATION RATES

Flow (GPM): Required flow through the basin.

Area (FT²): Tube settler area within the basin.

Application Rate (AR): $\frac{GPM}{FT^2}$

IFR-6024 (2 ft.)	IFR-6036 (3 ft.)	IFR-6041 (4 ft.)
AR = ≤ 2.5	AR = ≤ 4.0	AR = ≤ 4.5

BRENTWOOD INDUSTRIES

Brentwood Industries, Inc.
Mailing Address P.O. Box 605, Reading, PA 19603, USA
Shipping Address 610 Morgantown Road, Reading, PA 19611
Phone 610.236.1100 *Fax* 610.736.1280
Email wwsales@brentw.com
Website www.BrentwoodProcess.com

© Brentwood Industries 2003
Printed 06/03

Tube Settler System Design

Tube Settler System design is based on these three criteria:

Flow (gpm): Required hydraulic flow capacity through the basin

Area (ft²): Plan area of tank for tube settlers.

Design Application Rate: Flow/Area (1.5 to 3.5 gpm/ft²)

Tube settlers handle maximum application rates from 2.5 to 4.5 gpm/ft². The recommended application rate for design purposes is 1.5 to 3.5 gpm/ft². This design application rate should be verified in accordance with local design standards for allowable flows, application rates, etc. Consideration of the influent water chemistry, settleability, and basin hydraulics should also play a role in selecting the proper application rate.

TUBE SETTLER	VERTICAL HEIGHT	TUBE LENGTH**	TYPICAL DESIGN APPLICATION RATE	EQUIVALENT SETTLING AREA
20"	20.00"	23.09"	1.50 gpm/ft²	10.3 ft²/ft
IFR-6024*	24.00"	27.71"	2.00 gpm/ft²***	12.3 ft²/ft
30"	30.00"	34.64"	2.50 gpm/ft²	15.4 ft²/ft
IFR-6036*	36.00"	41.57"	3.00 gpm/ft²	18.5 ft²/ft
40"	40.00"	46.19"	3.50 gpm/ft²	20.5 ft²/ft
IFR-6041*	41.00"	47.34"	3.50 gpm/ft²	21.0 ft²/ft

* Brentwood Tube Settlers
** Tube length is based on an angle of 60°
*** Some states are limited by the 10 States Standards application rate of 2.0 gpm/ft²

The top of the tube settler modules should be submerged approximately 18" to 30" below the water surface. To prevent high velocities and short circuiting of tubes, the velocities through the sedimentation basin should be verified. This can be calculated by dividing the flow through the tank (ft³/s) by the cross sectional area (height x width) perpendicular to flow under the tube settler area, where the height is the distance between the bottom of the tube settlers and the basin floor.

Basin Velocity = Flow (ft³/s) /Area (ft²) ≤ 0.05 fps

The velocities under the tube settler area generally should not be greater than 0.05 fps. To avoid problems with longitudinal velocity, either the tank width or height should be modified. If this is not feasible, consideration of decreasing the flow is an option. Note that this figure is a general guideline and, if the velocity is a concern, a more detailed hydraulic analysis should be performed. When designing the layout of tube settlers within a basin, care should be given to avoid installation near entrance areas where turbulence could impact the performance of the tubes. In a horizontal basin it is recommended that approximately one-third of the basin length should remain tube-free to act as a quiescent zone. Generally, this is easy to implement because the required area of tube settler coverage will occupy a smaller portion of the basin.

Support System Design

Tube settler module support systems should have a bearing surface of approximately 2". Bearing surfaces of more than 2" will cause blockage of the tubes that are in contact with the structural members. Supports less than 2" wide can create loading forces that could crush the modules and reduce their effectiveness. Tubular supporting structures are not recommended because they create point loads, which can severely damage the tube settlers.

The support system can be made of stainless steel, painted carbon steel, or aluminum.

Supports for the modules must be located a minimum of 1'-0" from the end of each module for modules less than 8'-0" in length and 1'-6" for modules greater than 8'-0" in length.

The support system must be designed with consideration of both live loads (human traffic) and dead loads (Dead loads include the weight of the PVC tube settlers, floc build-up, troughs, baffles, protective surface grating, etc.). The dry weight of PVC tube settlers is approximately 1.75 to 2.00 lbs/ft³. The support system should be designed in accordance with a maximum 8'-0" unsupported span of the tube settler. This design will support both dead and live loads with an adequate safety factor. Some manufacturers will design based on a 10'-0" unsupported span that limits operator access and can be potentially dangerous.

In rectangular tanks, the supports should span the full width of the tank. If this is not possible, intermediate support columns may be used. However, the support system should not impact any sludge-collecting device operations or other basin operations. Often concrete center columns are available for use in attachment of the tube settler support system.

Circular clarifiers can use supports that span from the outside diameter to the center well, creating pie shape tube settler areas. If complete coverage is not required for circular clarifiers, cantilevered support frames can be attached to the outer wall to provide the required coverage area.

Trough Design

Troughs and weirs for the tube settler system must be designed to handle peak flows and meet local regulatory requirements. Generally, a flow of 20,000 gpd per linear foot of weir (10 States Standards) is sufficient. Material of construction for troughs and weirs is commonly UV-inhibited, NSF-certified fiberglass or stainless steel. The layout of the troughs should be equally-spaced so flow distribution is realized throughout the tube settler area. A general rule of thumb is that trough spacing should not be more than four times the tube submergence.

Baffle Design

Baffles located at the tube settler/quiescent zone interface are required to direct water through the tube settlers area. They should be constructed of UV-inhibited fiberglass, PVC, or stainless steel. The design of the baffle system should be integrated with the support system.

Tube Settler Access

During basin design, consideration must be given to operator access for cleaning and for servicing of the effluent troughs/weirs, as required, within the tube settler area. Like any type of equipment, tube settlers will require periodic cleaning and maintenance and it is unreasonable to deny access for plant operators. A basin walkway design and/or a protective covering on the tube settlers should be provided to allow for a safe walking surface. A plastic or fiberglass grating is ideal because it not only allows access to the tubes, troughs, and weirs, but also adds a protective layer to the tube settlers. Any type of grating must be specifically designed not to hinder the tube settler performance and to be structurally sufficient without causing damage to the tube settlers.

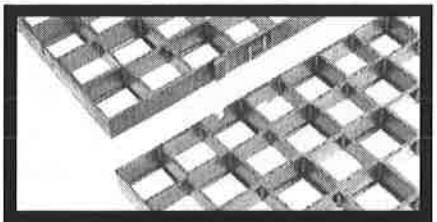

Brentwood AccuGrid® Protective Surface Grating

Brentwood has developed a unique, cost-effective means of providing additional protection to a tube settler system. Our potable-grade NSF-certified AccuGrid provides a protective layer from foot traffic and from the repeated hydraulic impact which occurs during routine wash-downs. The one-piece, interlocking panels are strong, lightweight, economical, and easy to install. AccuGrid protective surface grating will extend the useful life of the tube settlers by 2-3 times.

TUBE SETTLER DESIGN & APPLICATION

System Design Criteria

According to the technical review entitled *Tubular Settlers*[2], written by Mr. Roderick M. Willis in 1978, there are three basic requirements essential for successful performance of tube settlers.

1. There must be laminar (or viscous) flow conditions within the tubes at the maximum flow rate required. Laminar flow is essential so that each slowly-settling floc particle within a tube maintains a steady descent to the collecting surface of the tube and is not intermittently swept upward by turbulent currents within the tube.

2. The residence time within each tube must be ample so that a floc particle entering at the extreme upper edge of the tube will have sufficient time to settle to the collecting surface a vertical distance below. (Once the particle reaches the collecting surface, the coalescing tendency between particles creates a steady sludge formation).

3. The velocity of flow through the tubes must not exceed a critical maximum that would cause the settled sludge to lose stability and be swept out of the tube in the direction of normal flow. As a corollary, the volume of the tube must be ample to allow either accumulation or a continual discharge backward of all sludge, without critically changing the normal flow rate through the tube

Size, Shape, and Configuration

In addition to system design criteria, size, shape, and configuration need to be evaluated when choosing a tube settler module design. The vertical settling height within a tube should be kept as short as possible, within the restraints of cost and plugging potential, to minimize the settling distance for the particles. A V-groove base should be provided to allow for the rapid accumulation of solids into a compact mass, which slides continuously down the tube.

When selecting a tube settler, careful consideration should also be given to the vertical height of the modules. There are several different size tube settlers, each having a specific application rate. *(See chart under System Design for more info.)* Tube settlers with a vertical height of 24" and a tube length of 28" are the most commonly used size. 3' and 4' tube heights, because of longer residence time, are advantageous in many applications as well, such as high flow/high turbidity applications and where existing basins need improved settling capabilities to increase the plants total capacity.

Tube settlers manufactured with the tubes aligned in the same direction avoid the formation of crossing points that crossflow tubes promote. Many manufacturers compromise tube settler flow-through with "criss-crossing" tubes in order to achieve module rigidity. Crossing points can re-suspend the floc particles, affecting process performance. Tube modules that have flow in only one direction are easier to clean and have less chance for plugging, particularly where ends of modules meet.

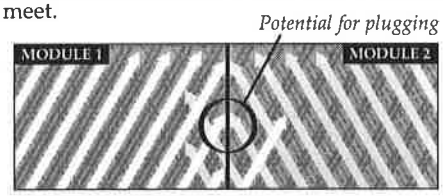

CRISS-CROSSING TUBES

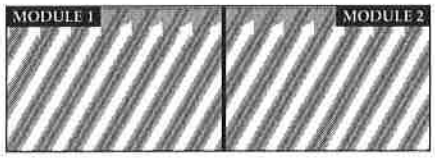

UNI-DIRECTIONAL TUBES

Also, the tube module design should incorporate features that would prevent gaps along the installed modules. These gaps allow short-circuiting of unclarified water to pass around the tube settlers. A module design which allows nesting with adjacent modules is ideal because it maximizes available area and increases the total module strength.

Tube Settlers vs. Plate Settlers

Plate settlers (Lamella Plates) are often compared to tube settlers when evaluating options for upgrading plants. They are more expensive than tube settlers because of the material of construction, and the wide plates in operation tend to be hydraulically unstable. Tube settlers eliminate crossflows and eddy currents and allow for the use of corrosion-resistant, lighter-weight PVC, resulting in a 50% cost savings. Tube settlers are a common, economically-viable alternative/solution to parallel plates (plate settlers).

Material of Construction

Tube settler modules should be constructed of evenly-spaced sheets of PVC which are solvent-welded to form a durable bond between sheets and channels. The PVC material is inert and resistant to deterioration from naturally-occurring constituents in water or wastewater.

Material and finished modules to be used for potable water treatment plant should be Certified to ANSI/NSF-61 Standard for drinking water.

Any material used for either water or wastewater should include an ultraviolet radiation inhibitor.

Some tube settler modules are constructed of ABS, which is a highly flammable material. A spark from welding, drilling, or a cigarette, etc. could ignite the ABS tube settlers, causing injury to personnel and damage to the tube settlers and surrounding structures.

PVC modules (unlike ABS and other materials) have a specific gravity considerably greater than water and will not float. ABS modules have a specific gravity only slightly higher than water and require a tie-down system. This results in greater costs for material and installation. A tube settler module constructed of PVC will not require any hold-down system or clips.

The mechanical properties of PVC exceed those of ABS, resulting in a more structurally sound installation. The most important mechanical property of PVC, flexural modulus, is 30% greater then that of ABS. PVC is denser, has greater tensile strength, higher impact strength, and is much less flammable then ABS.

"The Paducah WTP increased their total plant capacity by 4.0 MGD (12.0 MGD to 16.0 MGD) by replacing their existing 20" high tube settlers with new, extended tube settlers having a vertical height of 36". This allowed the plant to meet the increased demand without building a new settling basin, saving the City of Paducah hundreds of thousands of dollars."

Comparison of Physical and Mechanical Properties of PVC and ABS

PROPERTY	TEST METHOD	PVC	ABS
Specific Gravity	D792	1.45 gram/cm³ max.	1.06 gram/cm³ max.
Tensile Strength	D638/D882	6,000 psi min.	5,100 psi min.
Flexural Modulus	D790	425,000 psi min.	300,000 psi min.
Flexural Strength	D790	11,000 psi min.	8,500 psi min.
Impact Strength	D256	10.0 ft-lbs/in min.	6.3 ft-lbs/in min.
Heat Deflection	D648	158°F @ 264 psi min.	180°F @ 264 psi min.
Flammability	UL94	Grade Count = 22 (self-extinguishing)	Grade Count = 135 (extremely flammable)

[2] Willis, R.M. *Tubular Settlers-A Technical Review, Journal AWWA*, 331:335 (June 1978)

Tube Settlers

Tube settlers and parallel plates increase the settling capacity of circular clarifiers and/or rectangular sedimentation basins by reducing the vertical distance a floc particle must settle before agglomerating to form larger particles.

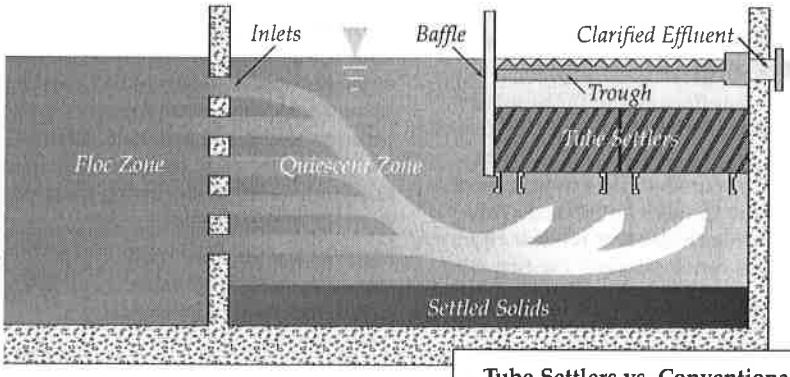

Tube Settlers vs. Conventional Settling

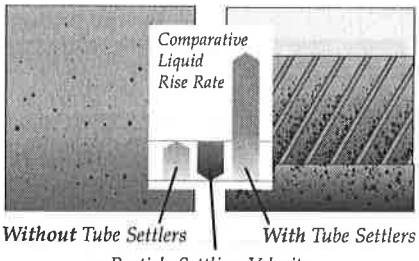

Tube settlers use multiple tubular channels sloped at an angle of 60° and adjacent to each other, which combine to form an increased effective settling area. This provides for a particle settling depth that is significantly less than the settling depth of a conventional clarifier, reducing settling times.

Tube settlers capture the settleable fine floc that escapes the clarification zone beneath the tube settlers and allows the larger floc to travel to the tank bottom in a more settleable form. The tube settler's channel collects solids into a compact mass which promotes the solids to slide down the tube channel.

Why Tube Settlers?

Tube settlers offer an inexpensive method of upgrading existing water treatment plant clarifiers and sedimentation basins to improve performance. They can also reduce the tankage/footprint required in new installations or improve the performance of existing settling basins by reducing the solids loading on downstream filters.

Made of lightweight PVC, tube settlers can be easily supported with minimal structures that often incorporate the effluent trough supports. They are available in a variety of module sizes and tube lengths to fit any tank geometry, with custom design and engineering offered by the manufacturer.

Advantages of Tube Settlers

The advantages of tube settlers can be applied to new or existing clarifiers/basins of any size:

- Clarifiers/basins equipped with tube settlers can operate at 2 to 4 times the normal rate of clarifiers/basins without tube settlers.
- It is possible to cut coagulant dosage by up to half while maintaining a lower influent turbidity to the treatment plant filters.
- Less filter backwashing equates to significant operating cost savings for both water and electricity.
- New installations using tube settlers can be designed smaller because of increased flow capability.

"Clarifiers equipped with tube settlers can operate at 2 to 4 times the normal rate of clarifiers without tube settlers."

- Flow of existing water treatment plants can be increased through the addition of tube settlers.
- Tube settlers increase allowable flow capacity by expanding settling capacity and increasing the solids removal rate in settling tanks.

"The City of Westminster, CO used alum as their water treatment plant flocculant. After the installation of tube settlers, they cut the alum dosage from 30 ppm to 16 ppm, and the filter influent turbidity was still decreased by 25%. Since the filter influent turbidity had decreased, this enabled a savings of over 27% water used for filter backwashing[1]."

[1] *Innovative Plant Operations Yield Bonuses, Opflow,* Vol. 6 No. 10 (Oct. 1980)

BRENTWOOD INDUSTRIES

Document 1.2 © October 2005

Water Technology Group

WHY BRENTWOOD TUBE SETTLERS?

Brentwood provides complete engineered systems, including tube settlers, supports, baffles, troughs & weirs, and protective surface grating. The advantages of a Brentwood installation are:

- **Single source responsibility.** Avoid problems with coordination of engineering, installation, and pricing of different components.
- **Save money** by purchasing an economical packaged system.
- **Exclusive products and features** like AccuGrid Protective Surface Grating and integrated structural ribs provide unique benefits to the tube settler system.
- **Extensive engineering experience** in both plastics design and water treatment technologies are utilized in every system design.

Project Customization

Brentwood tube settler modules can be "custom fit" for either rectangular or circular tanks. Standard lengths available are 6', 8', 10', or 12', with standard widths of 1' or 2'. Other sizes are available upon request.

Every tube settler system is different due to project requirements, tank configuration, etc. Please contact us to provide detailed budget pricing, schematic system layouts, and specifications for your particular system design.

Project Pricing

The following case studies are representative of Brentwood's economic performance within the water industry. The figures shown, adjusted for inflation, are from actual projects. System budget prices will vary considerably based on structural requirements and the scope of the project.

CASE STUDY #1:

IFR-6024 System vs. Plate Settler System	
8 basins, 20'x52' tube settler area, Project allowed cost add for plate settler system.	
Plate Settler System	Bid Cost = $1,000,000
IFR-6024 System	**Bid Cost = $400,000**

CASE STUDY #2:

Retrofit w/Tubes vs. Build New Basin	
2 basins, 17'x32' tube setter area.	
New Tank Cost*	Budget Cost = $300,000
IFR-6036 System	**Budget Cost = $95,100**

CASE STUDY #3:

New Tank w/o Tubes vs. w/Tubes	
1 basin 20'x50' without Tubes, 1 basin 15'x30' with Tubes	
Without Tubes*	Budget Cost = $375,000
IFR-6041 System	**Budget Cost = $250,000**

Does not include new inlet piping, flocculation chamber, troughs, weirs, outlet piping. Includes only site grading, excavation, concrete tank

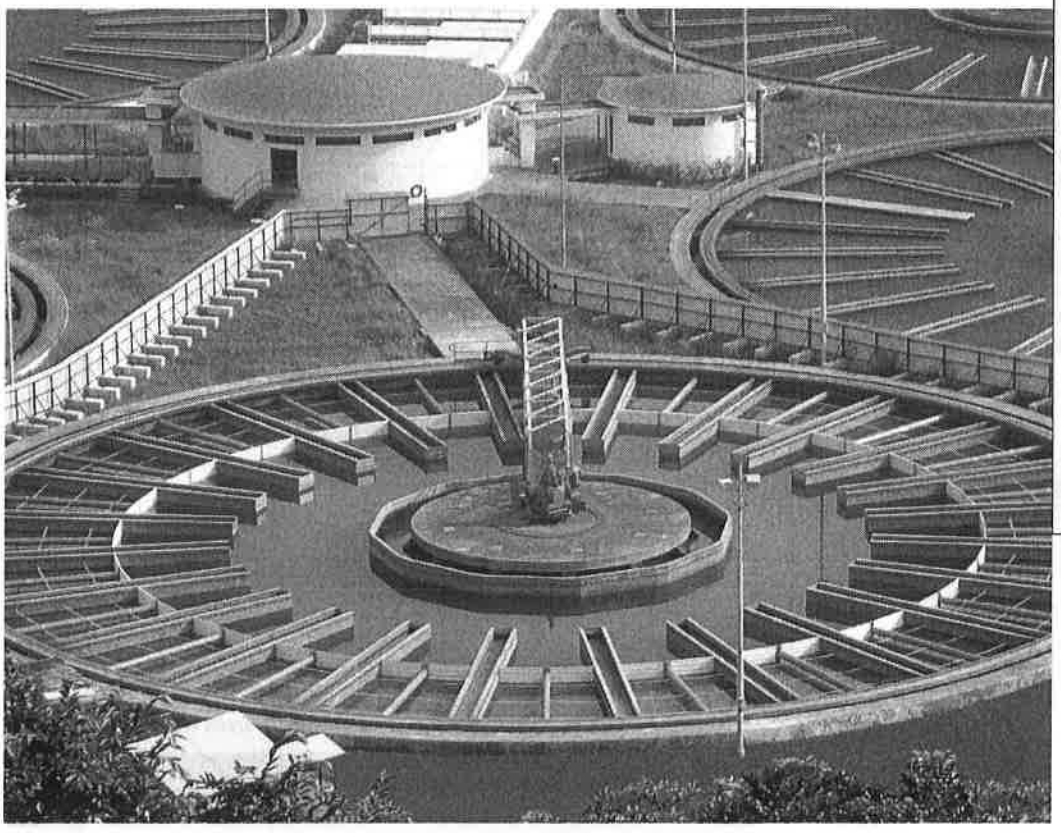

The City of Myrtle Beach Surface Water Treatment Facility has 5 settling tanks, each with an original design flow capacity of 5 MGD. Each tank is 60' wide x 120' long x 15.5' deep, divided into three 20' passes.

The sedimentation process was a major component that needed to be upgraded or expanded to increase the plant's rated capacity to meet current and future flow predictions. Enhanced settling was required because the 4-hour detention time was not being met at 30 MGD. After reviewing all available options, the City of Myrtle Beach SWTF decided to purchase and install Brentwood IFR-6024 Tube Settlers in each of the 5 settling basins.

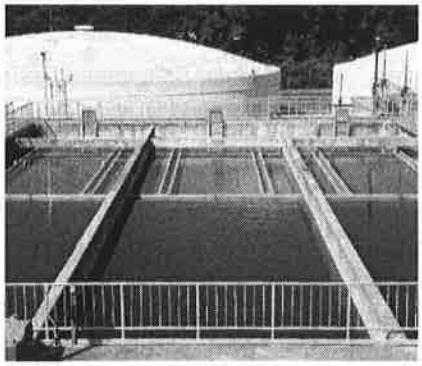

"After less than a year in operation, our Brentwood Tube Settler System:

- *Increased our flow capability (approved plant capacity) from 30 to 40 MGD*
- *Contributed significantly to historically-low settled water turbidity*
- *Reduced chemical coagulant usage*
- *Improved overall filter performance*
- *Allowed us to reduce the state Dept. of Health and Environmental Control (DHEC) mandated basin retention times from 4 hours to approximately 2.5 hours*
- *Allowed greater operating flexibility for the plant staff"*

Sam Scialdone
Plant Superintendent

BRENTWOOD INDUSTRIES
610 Morgantown Road, Reading, PA 19611
Phone 610.236.1100
Fax 610.736.1280
Email wwsales@brentw.com
Website BrentwoodProcess.com

AMT
A Subsidiary of The Gorman-Rupp Company
TM

NEW FOR 2007
90° ROTATABLE BASE ON ALL MODELS

Self-Priming Diaphragm Pumps

- ***Sand Cast Aluminum** Construction for Portability and Durability*
- ***Thermoplastic Rubber Diaphragm***
- ***2" to 3" NPT Suction and Discharge Sizes***
- ***1-5/8" Diameter Solids Handling Capability***
- ***Modular Component Design Permits Easy Maintenance and Cleanout***
- ***Engine Driven Models: Choice of Honda and Briggs & Stratton Gas or Yanmar Diesel Engines***
- ***Delivers up to 90 GPM***
- ***Maximum Temperature 180°F***

The AMT line of 2" and 3" Diaphragm pumps features 2-stage, 44 to 1 gear reduction with a large diameter output gear and heavy duty ball bearing construction. Often referred to as Mud Pumps or Sludge Pumps, diaphragm pumps are designed to pump mud, slurry, sewage, and thick liquids that have the ability to flow. AMT Diaphragm pumps are available with a choice of drivers to meet your application requirements: Briggs & Stratton or Honda gasoline engines, Yanmar Diesel, and 115 VAC electric motor with weatherproof cord and switch. Built-in molded polyurethane flapper/check valve assures self-priming to 20 ft. after initial prime. Heavy duty gear box is designed to operate pumps at 40 strokes per minute for Electric Motor Models and 60 strokes per minute for Engine-Driven Models. Each unit includes a 2" or 3" NPT steel suction strainer, two NPT nipples, and a wheel kit with 10" semi-pneumatic transport wheels for portability. Models 336E-K6, 336G-K6, 335G-K6, and 335E-K6, are kits provided less motor or engine. Pumps are designed for use with non-flammable liquids which are compatible with pump component materials. ***Suction and discharge port size cannot be reduced.***

Model 335D-96*

*shown with 90° rotatable base

INDUSTRIAL DUTY

Model 335H-96*
*handle not shown

Model 335E-96

Performance of 2" Diaphragm Pumps

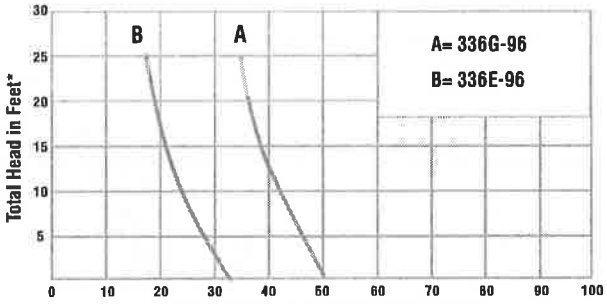

* Convert to PSI, divide by 2.31 Liquid-Water specific gravity 1.0

Performance of 3" Diaphragm Pumps

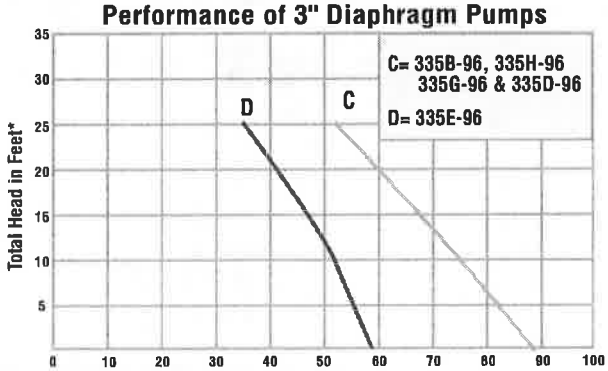

* Convert to PSI, divide by 2.31 Liquid-Water specific gravity 1.0

Diaphragm Pumps

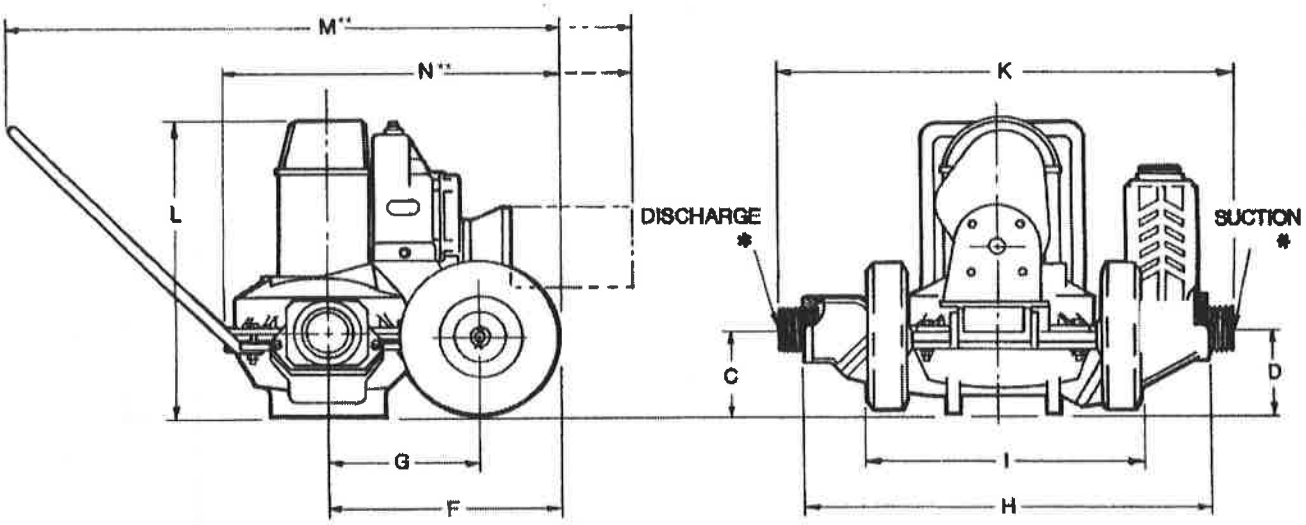

Model #	Curve	Driver	SUC*	DIS*	C	D	F	G	H	I	K	L	M**	N**	Shpg. Wt.
336G-96	A	HONDA GX120	2"	2"	7.3	5.6	17.8	12.8	22.2	18.1	25.7	23.2	39.2	25.0	125 lbs.
336E-96	B	1.5 HP Elec. Motor	2"	2"	7.3	5.6	17.8	12.8	22.2	18.1	25.7	23.2	41.1	26.8	131 lbs.
335G-96	C	HONDA GX120	3"	3"	6.2	6.3	14.5	9.5	26.5	17.9	30.0	22.0	42.0	46.0	175 lbs.
335E-96	D	1.5 HP Elec. Motor	3"	3"	6.2	6.3	14.5	9.5	26.5	17.9	30.0	22.0	43.5	27.5	186 lbs.
335B-96	C	B&S CP550	3"	3"	6.2	6.3	14.5	9.5	26.5	17.9	30.0	22.0	41.5	25.5	181 lbs.
335H-96	C	HONDA GX160	3"	3"	6.2	6.3	14.5	9.5	26.5	17.9	30.0	22.0	41.5	25.5	182 lbs.
335D-96	C	YANMAR DIESEL L48	3"	3"	6.2	6.3	14.5	9.5	26.5	17.9	30.0	22.0	43.0	27.0	203 lbs.
336G-K6	A	Kit, Less Engine	2"	2"	7.3	5.6	17.8	12.8	22.2	18.1	25.7	23.2	N/A	N/A	95 lbs.
336E-K6	B	Kit, Less Motor	2"	2"	7.3	5.6	17.8	12.8	22.2	18.1	25.7	23.2	N/A	N/A	95 lbs.
335G-K6	C	Kit, Less Engine	3"	3"	6.2	6.3	14.5	9.5	26.5	17.9	30.0	22.0	N/A	N/A	146 lbs.
335E-K6	D	Kit, Less Motor	3"	3"	6.2	6.3	14.5	9.5	26.5	17.9	30.0	22.0	N/A	N/A	146 lbs.

(*) Standard NPT (female) pipe thread.
(**) This dimension may vary due to motor or engine manufacturer's specifications.
NOTE: Dimensions have a tolerance of ±1/8".

Standard Features for AMT Diaphram Pumps

- Engine Driven Models - Choice of Honda, Briggs & Stratton Gas or Yanmar Diesel Engines
- 2" to 3" NPT Port Sizes
- Models 336E-96/335E-96 – 1.5 HP single phase, 115/230 Volt motor with manual reset overload includes 20 foot 115 VAC power cord and weather-proof on/off switch
- Models 336G-K6/335G-K6 – Kit, furnished less engine. For use with gasoline or diesel engines with .75" keyed shaft (SAE J609a Mounting Flange)
- Model 336E-K6/335E-K6 – Kit, furnished less motor. For use with electric motor (1725 RPM) or air motor with a minimum of 1.5 HP. 56C Mounting Flange required.

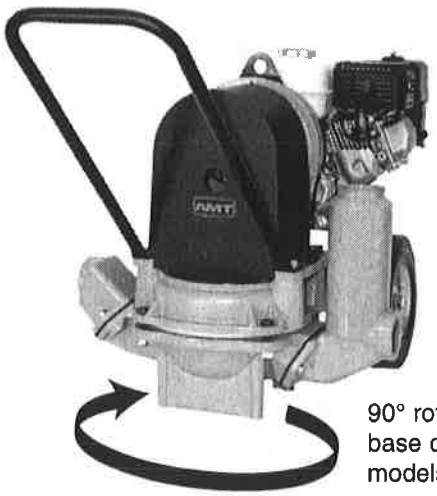

90° rotatable base on all models

OFF THE SHELF PUMPS

WARNING: Do not use in explosive atmosphere or for pumping volatile flammable liquids.

See price book page 13

The Gorman-Rupp Company reserves the right to discontinue any model or change specifications at any time without incurring any obligation.

PROPRIETARY DATA

PROPERTY OF DEN HARTOG INDUSTRIES, INC. INFORMATION FURNISHED HEREIN IS THE PROPERTY OF DEN HARTOG INDUSTRIES, INC. AND SHALL NOT BE USED, DISCLOSED TO OTHERS, OR COPIED WITHOUT THE EXPRESSED WRITTEN CONSENT OF DEN HARTOG INDUSTRIES, INC. ALL RIGHTS RESERVED.

CB2600-86 C

1. SPECIFIC GRAVITY IS 1.75
2. 1 PIECE ROTATIONALLY MOLDED
3. TRANSLUCENT
4. FDA APPROVED RESIN
5. CALIBRATED IN GALLONS
6. THREE YEAR WARRANTY
7. UV STABILIZED
8. MIXER OR PUMP MOUNT ON REQUEST

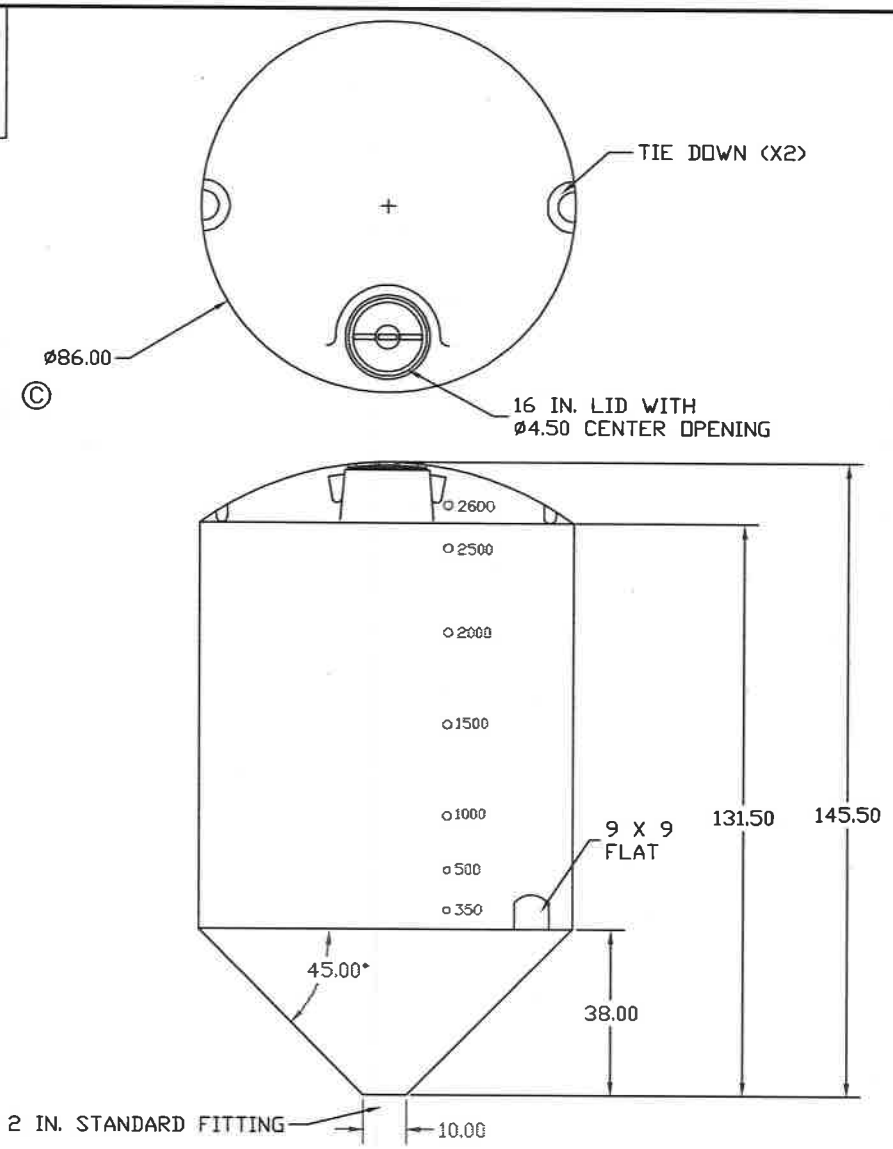

REV	DESCRIPTION	DATE	APPRD
C	DIAMETER WAS 85	7/31/06	NVE
B	UPDATED DIMENSIONS	7/13/06	NVE
A	ISOLATED TANK AND STAND	6/13/06	NVE

DRAWN / DATE
DHJ 12/9/93

APPRD. / DATE

ALL DIMENSIONS ARE IN DECIMAL INCHES
TOLERANCES UNLESS OTHERWISE SPECIFIED
± 1% @ 68° F

THIRD ANGLE PROJECTION
ANSI 14.5M

MATERIAL

HDPE OR EQUIVALENT
REFERENCE MATERIAL DATA SHEET FOR SPECIFIC PROPERTIES.

NOTES:

1. NOM. WALL @ 0.369
2. SHOT WEIGHT 500 LBS.

ACE ROTO-MOLD
A DIVISION OF DEN HARTOG INDUSTRIES, INC.
4018 HWY. 60 BLVD, BOX 421, HOSPERS, IOWA 51238

CLIENT / DESCRIPTION
2600 Gallon ø86 CONE BOTTOM TANK

SCALE
N.S.

PART NO.
CB2600-86

PROPRIETARY DATA

PROPERTY OF DEN HARTOG INDUSTRIES, INC. INFORMATION FURNISHED HEREIN IS THE PROPERTY OF DEN HARTOG INDUSTRIES, INC. AND SHALL NOT BE USED, DISCLOSED TO OTHERS, OR COPIED WITHOUT THE EXPRESSED WRITTEN CONSENT OF DEN HARTOG INDUSTRIES, INC. ALL RIGHTS RESERVED.

CB086-45ST

C

KEY	PART NUMBER	DESCRIPTION	QTY.
1	A01250X15000	1/8 X 1 1/2 ANGLE	200 IN
2	B02500X30000	1/4 X 3 FLAT	306 IN (6 @ 51)
3	B03750X20000	3/8 X 2 FLAT	288 IN (6 @ 48)
4	C03X4.1	3" CHANNEL	576 IN
5	P10000	1" PIPE	217.5 IN (6 @ 36.25)
6	S-14GA	14 GA SHEET	9999 SI, (3 @ 48 X 88)
7	SJCB86/90ST-1	12" CB RING STAND	1
8	SJCB86/90ST-7	1/4 X 4 X 4 LEG PAD	6
9	T1000X01090	1 OD X .109 TUBING	241.5 IN (6 @ 40.25)

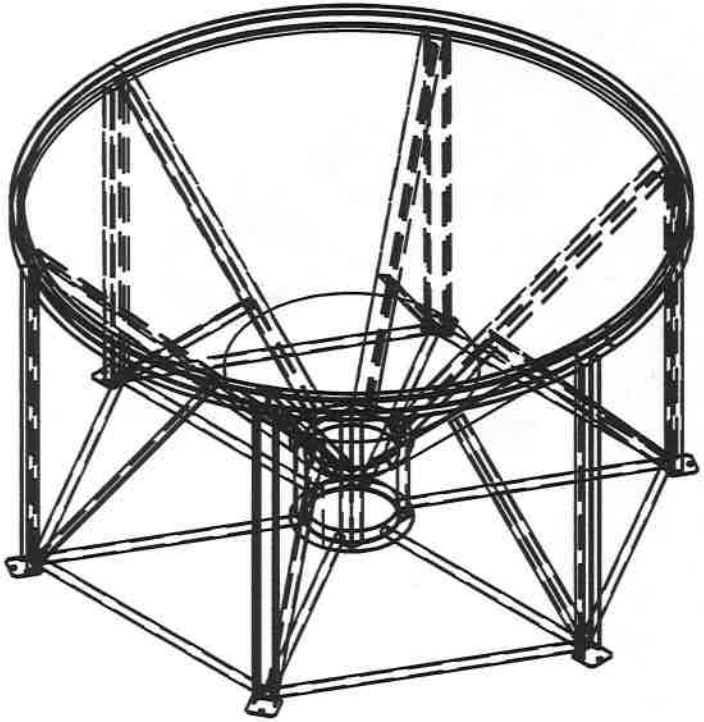

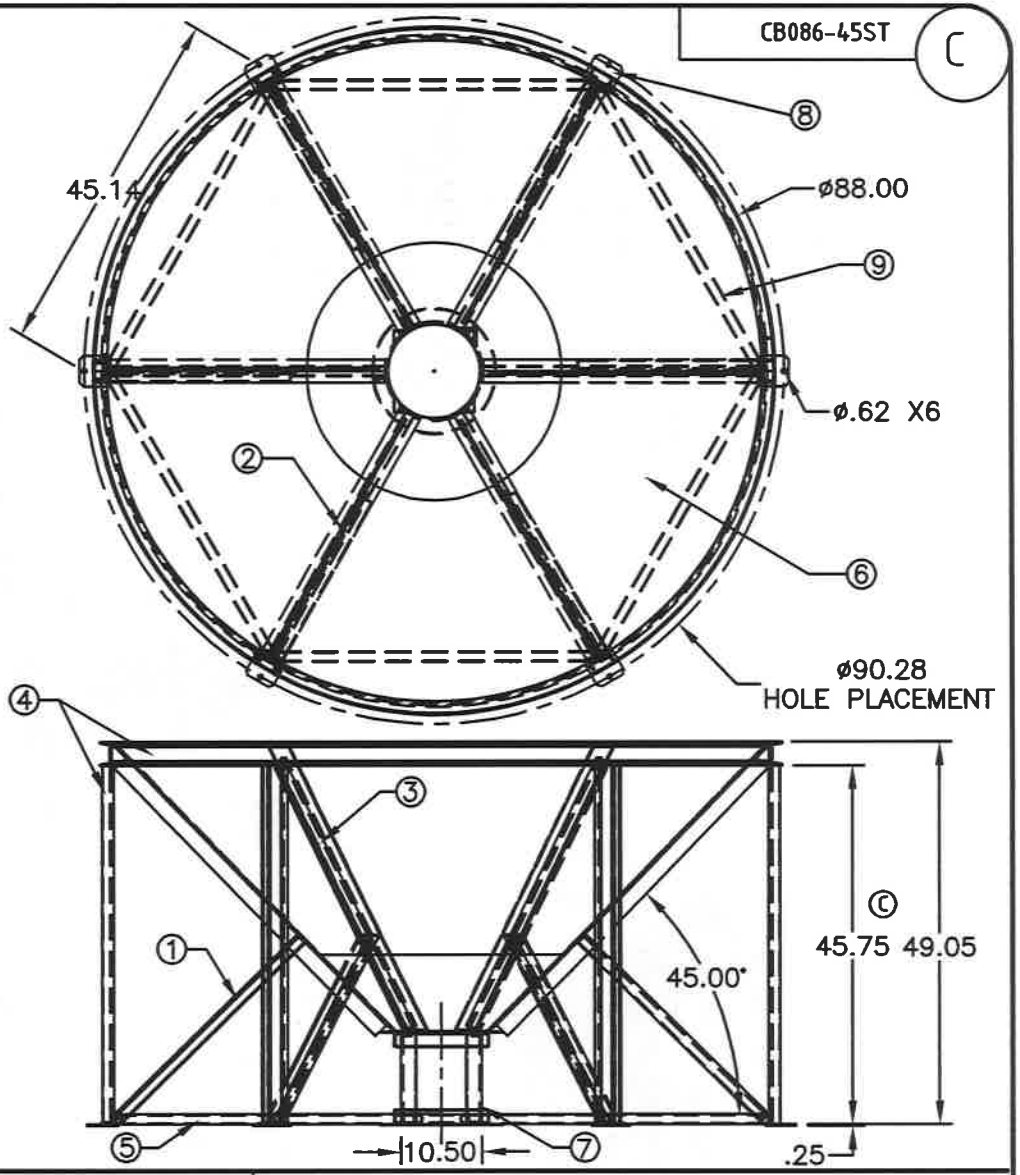

REV	DESCRIPTION	DATE	APPRD
C	WAS 46.00	12/27/06	
B	PN WAS CB08S-45ST	7/31/06	NVE
A	ADDED B.O.M.	6/9/06	NVE

DRAWN / DATE: NVE 7/1/05

APPRD. / DATE: DHJ 10/14/05

MATERIAL: MILD STEEL

ACE ROTO-MOLD
A DIVISION OF DEN HARTOG INDUSTRIES, INC.
4010 HWY. 60 BLVD., BOX 425, HOSPERS, IOWA 51238

CLIENT / DESCRIPTION: STAND FOR ø86.00 45° CONE BOTTOM TANKS

ALL DIMENSIONS ARE IN DECIMAL INCHES
TOLERANCES UNLESS OTHERWISE SPECIFIED
± 0.25

THIRD ANGLE PROJECTION
ANSI 14.5M

NOTES:
1. POWDER COATED - BLACK COLOR
2. WEIGHT 580 LBS.

SCALE: N.S.

PART NO.: CB086-45ST

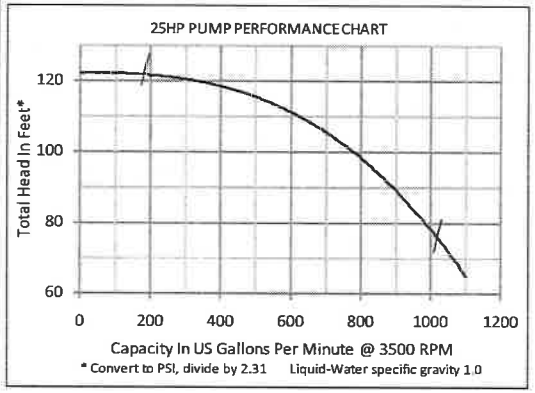

HIGH LEVEL ALARM

ELECTRICAL PANEL SPECIFICATIONS FOR 25 HP DUPLEX PUMP SKID

- VOLTAGE: 460 VOLTS
- PHASE: 3
- REQUIRED OVER CURRENT PROTECTION: 80 AMPS
- ACTUAL CURRENT LOAD: 71.1 AMPS

SERVICE WITHIN 50' (PROVIDED BY OTHERS)

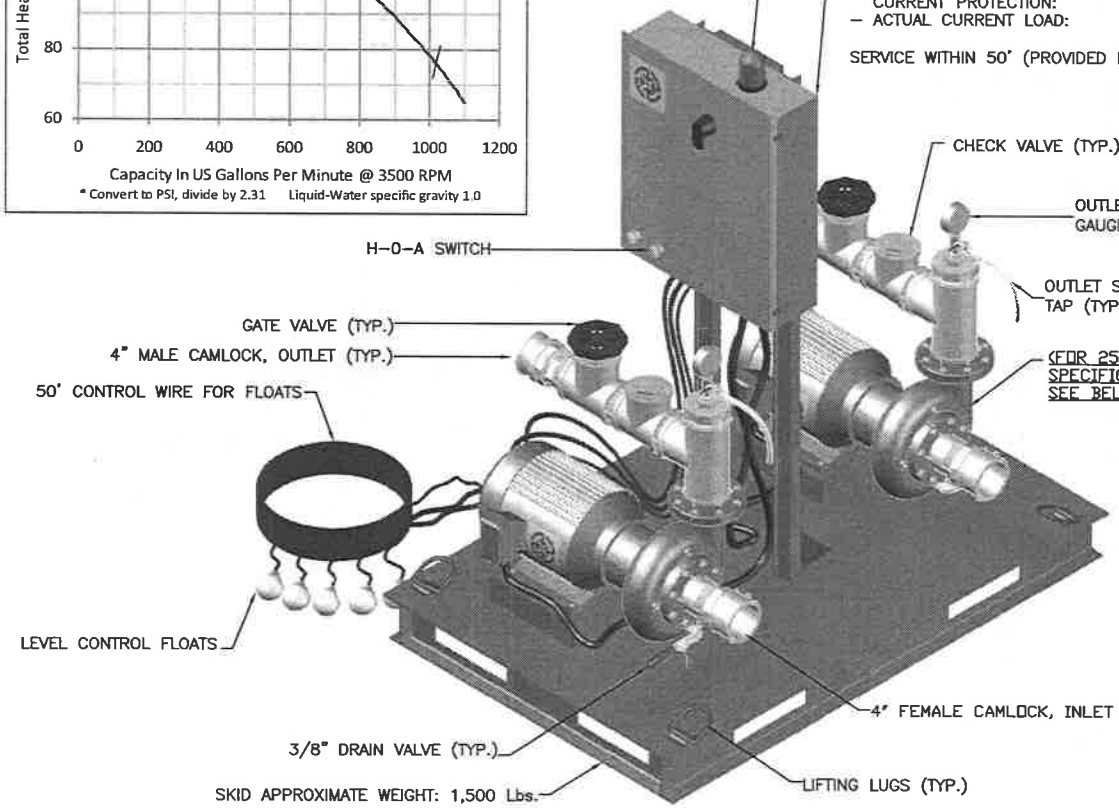

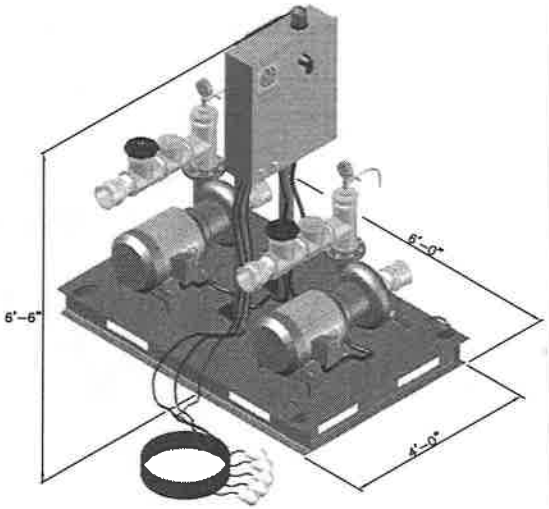

NOTE: THIS DRAWING DEPICTS A "TYPICAL" SKID.
ACTUAL DETAILS AND DIMENSIONS MAY VARY.

25 HP PUMP MECHANICAL/ELECTRICAL SPECIFICATIONS

- TYPICAL CAPACITY AND HEAD: 750 GPM @ 100' TDH
- CONSTRUCTION: STAINLESS STEEL
- MAXIMUM HEAD: 120 ft.
- MAXIMUM FLOW: 1000 GPM
- FRAME: 256TCZ
- ENCLOSURE: TEFC
- SUCTION: 4" FLANGE
- DISCHARGE: 4" FLANGE
- PUMP WEIGHT: 400 Lbs.
- IMPELLER DIAMETER: 6"
- DRIVER: 60 Hz, 2 POLE, 3500 RPM

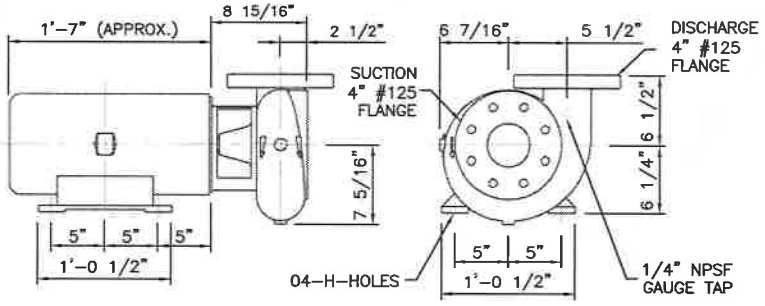

NO.	REVISIONS	DATE
A	TYPICAL	01/14/09

DUPLEX 25 Hp PUMP SKID STANDARD EQUIPMENT SPECIFICATION

SCALE:	NTS	APPROVED BY:	JB	DRAWN BY:	AAV
DATE:	01/14/09				

GROUND/WATER TREATMENT & TECHNOLOGY
P.O. BOX 1174
DENVILLE, NJ 07834

THIS DRAWING IS THE PROPERTY OF GROUND/WATER TREATMENT & TECHNOLOGY, INC

DWG SIZE:	A	SHEET:	1 OF 1	DRAWING NUMBER:	ST-0048-SPC	A

I:\Cad Files Rentals - STANDARD DRAWINGS\EQUIPMENT SPECIFICATION PUMPS\ST-0048-SPC Rev-A Duplex 25 Hp Pump Skid.dwg

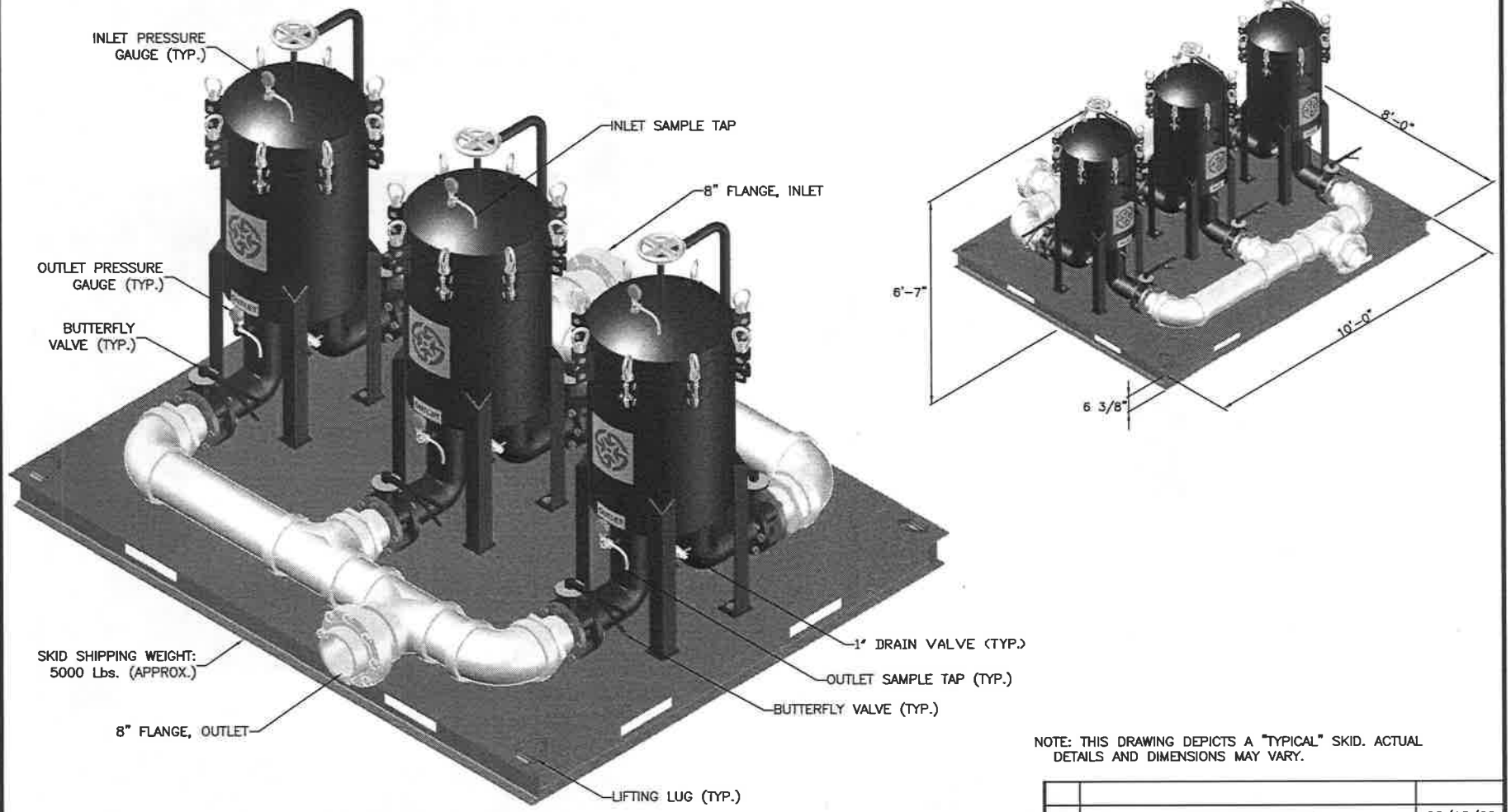

NOTE: THIS DRAWING DEPICTS A "TYPICAL" SKID. ACTUAL DETAILS AND DIMENSIONS MAY VARY.

PRESSURE DROP

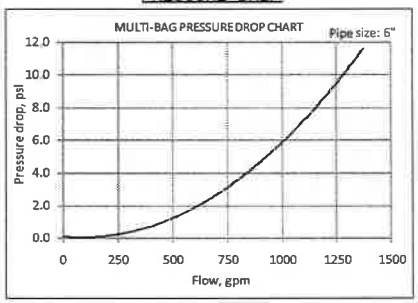

MULTI-BAG FILTER SPECIFICATIONS

- CONSTRUCTION:	CARBON STEEL
- HOUSING STYLE:	STANDARD
- NUMBER OF BASKETS:	6
- STRAINING FILTERING AREA:	26.4 SQR. FT.
- INLET/OUTLET SIZE:	6"
- NOMINAL FLOW RATE:	600
- STANDARD PRESSURE:	150 PSI
- WEIGHT (PER DRY UNIT):	750 Lbs.

BASIC DIMENSIONS

MODEL NUMBER & A: 24"
LEG BOLT CIRCLE: ø22.0"

B: 6"	C:15.0"
D: 50.7"	E: 69.7"
F: 7.00"	G: 20.1"

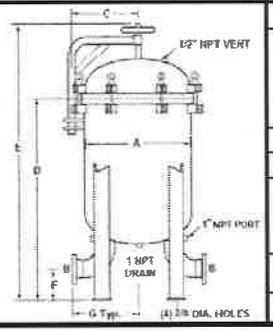

NO.	REVISIONS	DATE
C	ADDED SKID WEIGHT	02/18/09

TRIPLEX SIX BAG FILTER SKID STANDARD EQUIPMENT SPECIFICATION

SCALE: NTS	APPROVED BY: JB		DRAWN BY: AAV
DATE: 07/17/08			

GROUND/WATER TREATMENT & TECHNOLOGY
P.O. BOX 1174
DENVILLE, NJ 07834

THIS DRAWING IS THE PROPERTY OF GROUND/WATER TREATMENT & TECHNOLOGY, INC

DWG SIZE: A	SHEET: 1 OF 1	DRAWING NUMBER: ST-0020-SPC	C

I:\Good Files\Rentals - STANDARD DRAWINGS\EQUIPMENT SPECIFICATION\BAG FILTERS\ST-0020-SPC Rev-C Triplex Six Bag Filter Skid.dwg

Rosedale Filter Media

Rosedale has a wide selection of filter media available to help solve your filtration problems. Our product offerings include filter bags, filter cartridges, and perforated strainer baskets. This selection features a variety of options from low-cost, disposable filter media; through high-performance filter cartridge; to cleanable stainless steel elements.

The filtration efficiency values specified in our data (see Element Performance Chart on page 123), are the indication of the filter's performance. Unlike many manufacturers, Rosedale publishes the filtration efficiency and dirt capacity of our media, providing all the information needed for an accurate sizing of a filter.

Our media is offered in standard grades and high efficiency. Standard grade refers to products which are nominally rated. This means there is no specified efficiency at the micron size but the product is interchangeable with industry standards. Rosedale high efficiency filter media is rated 95%, 99%, or 99.98% efficient at the specified micron level.

Nominal Rating	Absolute Rating (95% Efficiency)
1	35
3	35
5	48
10	55
15	65
25	70
50	90
75	110
100	110

Bag or cartridge filters are usually selected so that the clean pressure drop does not exceed 2 psi. Change-out is recommended at 15 psid (for bags), and 30 psid (for cartridges). Higher pressure drops may be tolerated when contaminant loading is low.

A more comprehensive chart on page 123 details each product group with corresponding efficiency and micron rating.

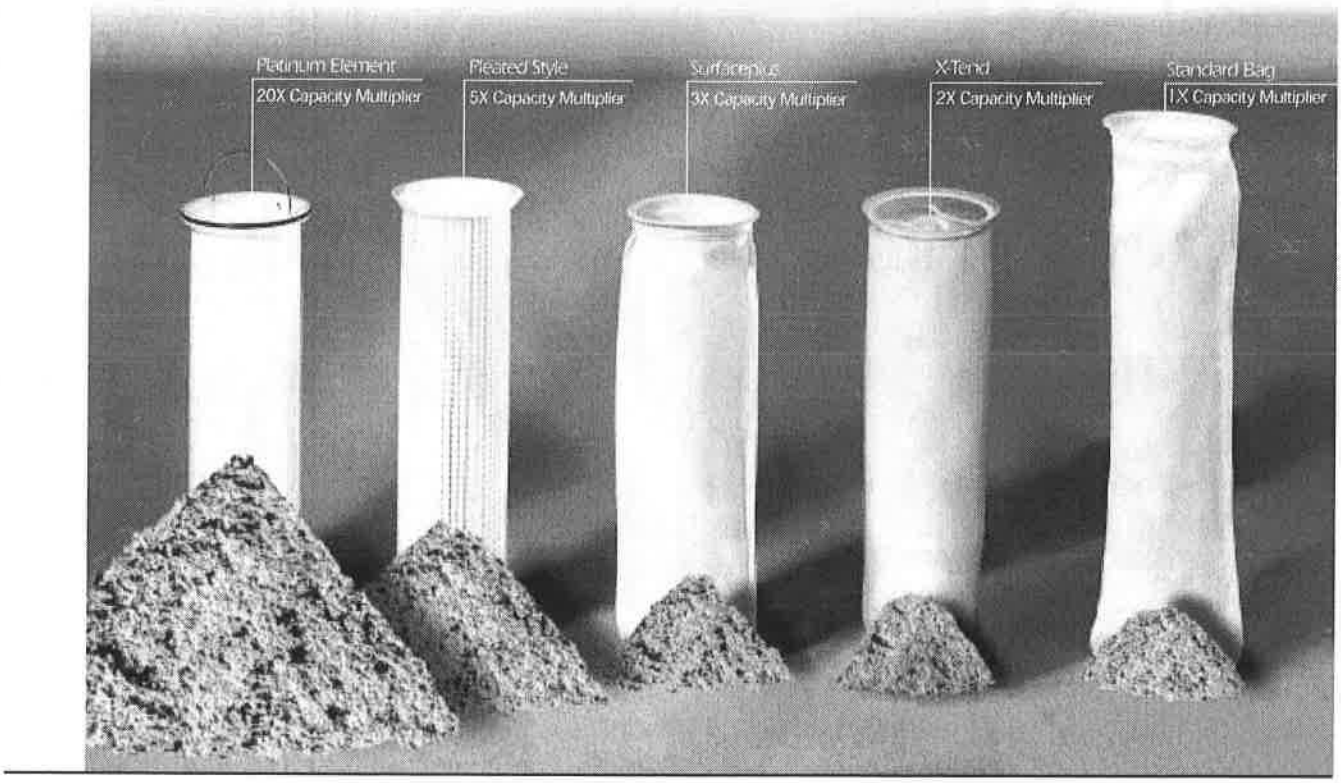

High-Capacity Filter Bags for Rosedale Bag Filters

Fits All Rosedale Filter Housings

Construction

Felt Bags-Standard Grade

Felt construction is generally chosen where smaller particle retention is required, in the nominal 1 to 100 micron range. It offers higher solids loading capacity than mesh. General-purpose felt bags are offered in polyester and polypropylene materials. Special-purpose felt bags are offered in polyester and polypropylene materials. Special-purpose felt bags include high temperature service (to 500°F) bags of Nomex® nylon or Teflon®.

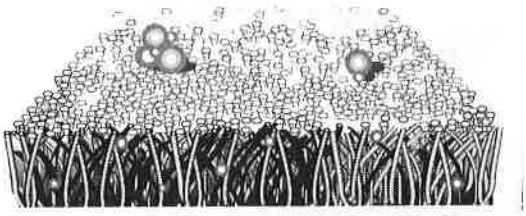

Mesh Bags

Mesh is a woven construction, generally used where micron ratings of 50 to 800 are required.

Two types are offered. The **multifilament** mesh is a low cost, disposable material offered in polyester. **Monofilament** mesh has higher strength, and is available in nylon. (It should be considered cleanable.)

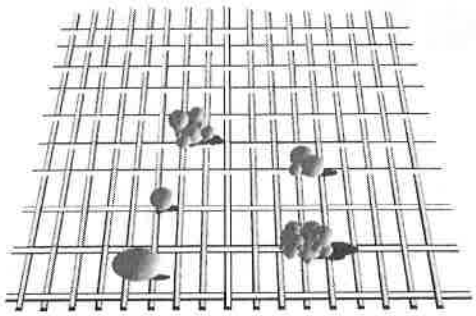

Oil Adsorption Bags

For removal of free oil, bags made of polypropylene microfibers, known as oil-adsorb, are available. A size 2 oil-adsorb bag will remove approximately a half-pound of oil from a water-oil liquid. It is only available with a 25 micron rating. If finer filtration is needed in an oil removal task, or high volume oil removal is required, Rosedale's Sorbent Containment Systems are available and information is located on page 101.

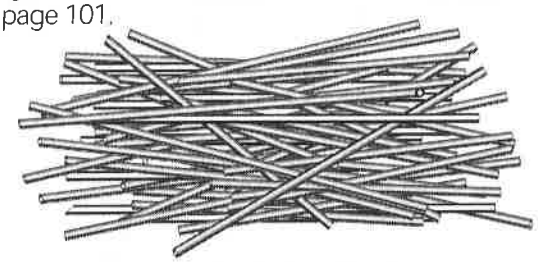

Melt Blown Media (Microfiber)

Polypropylene melt blown media offers unparalleled adsorption capacity for the removal of hydrocarbon contaminates from liquid streams. The melt blown media is also the heart of the high efficiency filter bag. The small diameter fibers create the bag's ability to remove fine particulate at high efficiencies. Fiber diameter is important because the pore size is a function of fiber diameter, density of fibers, and thickness of materials.

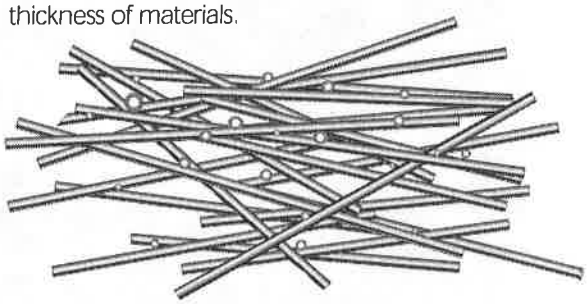

Felt Bag Finishes and Covers

Standard finish. Plain, as manufactured, without treatment or covers.

Glazed finish. The outer most surface fibers are melted by a momentary application of high heat. This bonds the fibers together and reduces the possibility of fiber migration.

Mesh covers completely encase the felt bag. This cover acts to contain any fibers that may separate from the filter bag. Materials available in mono and multifilament mesh, spun bonded nylon and polyester.

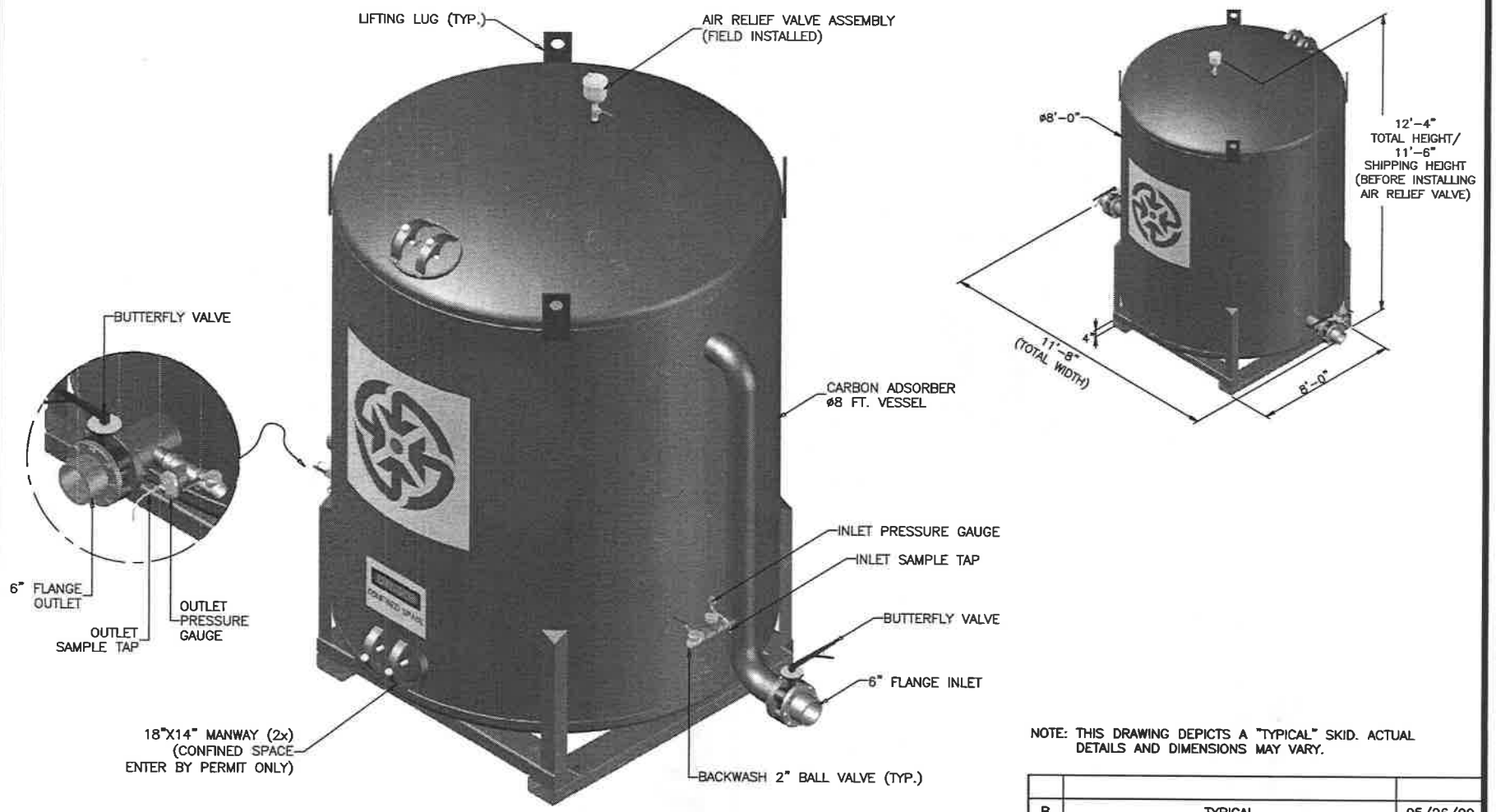

NOTE: THIS DRAWING DEPICTS A "TYPICAL" SKID. ACTUAL DETAILS AND DIMENSIONS MAY VARY.

10,000 POUNDS CARBON ADSORBER SPECIFICATIONS

– CARBON FILL:	10,000 Lbs.
– DESIGN STANDARD PRESSURE:	75 PSI
– MAX. FLOW RATE:	500/1,000 GPM
– HOUSING CONSTRUCTION:	A-36 CARBON STEEL
– INLET CONNECTION:	6" FLANGE
– OUTLET CONNECTION:	6" FLANGE
– DRAIN:	N/A
– CARBON FILL VOLUME:	350 Cu.ft.
– CARBON ADSORBER WEIGHT	
EMPTY:	5,000 Lbs.
SHIPPING (W/CARBON):	15,000 Lbs.
OPERATING:	30,000 Lbs.
– EBCT @ 500 GPM:	5.25 min.

NO.	REVISIONS	DATE
B	TYPICAL	05/26/09

10,000 Lb. CARBON ADSORBER STANDARD EQUIPMENT SPECIFICATION

SCALE: NTS	APPROVED BY: JB	DRAWN BY: AAV	
DATE: 09/30/08			

GROUND/WATER TREATMENT & TECHNOLOGY
P.O. BOX 1174
DENVILLE, NJ 07834

THIS DRAWING IS THE PROPERTY OF
GROUND/WATER TREATMENT & TECHNOLOGY, INC

DWG SIZE: A	SHEET: 1 OF 1	DRAWING NUMBER: ST-0032-SPC	B

I:\cad files\Rendok - STANDARD DRAWINGS\EQUIPMENT SPECIFICATIONS\CARBON ADSORBERS\ST-0032-SPC Rev-B 10k Carbon Adsorber Unit.dwg

Design of Pump and Treat GAC Systems

A pump and treat scheme like the one shown in the Figure below made up of two adsorbers in series allows for the best utilization of the carbon. The adsorbers should be sized to give an empty bed contact time (EBCT) of between 5 and 15 minutes at a hydraulic surface loading of 1 to 8 gpm/ft^2. These operating parameters are important in that they can strongly influence the length of the mass transfer zone (MTZ). The length of the MTZ should be significantly shorter than the depth of carbon bed. If this is not the case rapid breakthrough of the components being controlled may occur.

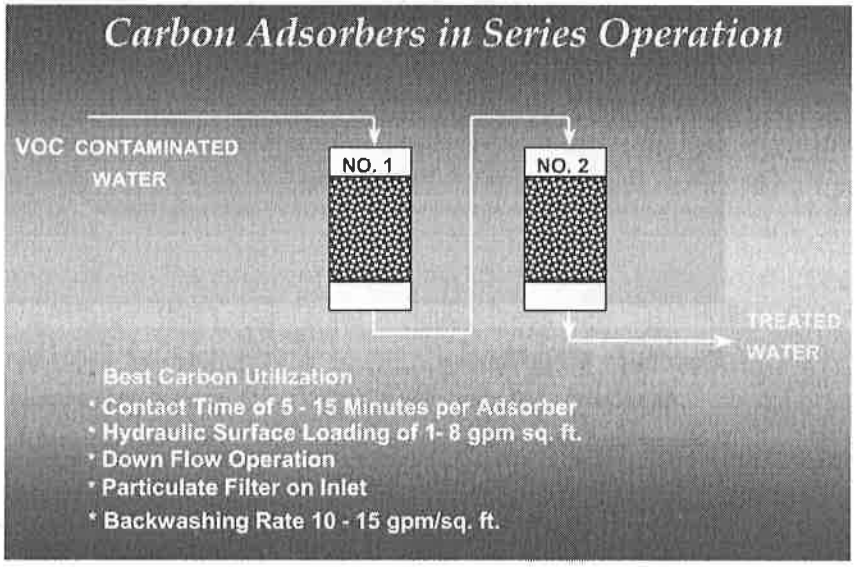

The lead adsorber in series operation is normally operated beyond the breakthrough discharge limit for the first compound needing to be controlled. This allows for more complete loading of the carbon contained in the first adsorber (reducing carbon consumption) before it is changed out with fresh carbon and the second adsorber is moved to the lead position. Under some circumstances such as low contaminant concentrations, long contact times and long expected operating cycles, adsorbers can be operated in parallel without a backup adsorber, provided the effluent from the adsorber is frequently monitored. Often the appearance of the contaminant of interest at the vessels 75% sample port is used to schedule changeout servicing. Monitoring in this manner assures breakthrough beyond acceptable limits does not occur.

The above is an excerpt from USFilter Westates Technical Dept. Los Angeles, CA, Tech Note No. 24, October 2001 "Carbon Applications for Groundwater Clean-Up" by James R. Graham, PhD., Technical Director, USFilter Westates.

DATA SHEET

USFILTER WESTATES CARBON AQUACARB® 830 AND 1240

Coal based granular activated carbon

(Formerly KG-401 and KG-502)

FOR MUNICIPAL, INDUSTRIAL AND REMEDIAL WATER TREATMENT

Description & Applications

AquaCarb® 830 and AquaCarb® 1240 are high activity granular activated carbons manufactured from selected grades of bituminous coal. Manufactured by direct activation, they exhibit exceptional hardness and attrition resistance and have become a cost effective choice for use in municipal, industrial and remedial water treatment applications. These high surface area microporous carbons have been specifically developed for the removal of a broad range of organic contaminants from potable, waste and process waters.

- ANSI/NSF Standard 61 classified for use in potable water applications
- Fully conforms to physical, performance and leachability requirements established by the current ANSI/AWWA B604 (which includes the Food Chemical Codex requirements)
- A detailed quality assurance program guarantees consistent quality from lot to lot and shipment to shipment

Quality Control

All AquaCarb® activated carbons are extensively quality checked at our State of California certified environmental and carbon testing laboratory located in Los Angeles, CA. USFilter's laboratory is fully equipped to provide complete quality control analyses using ASTM standard test methods in order to assure the consistent quality of all AquaCarb® carbons.

Our technical staff offers hands-on guidance in selecting the most appropriate system, operating conditions and carbon to meet your needs. For more information, contact your nearest USFilter representative.

USFilter

DATA SHEET

AQUACARB® 830
AQUACARB® 1240

Coal based granular activated carbon

(Formerly KG-401 and KG-502)

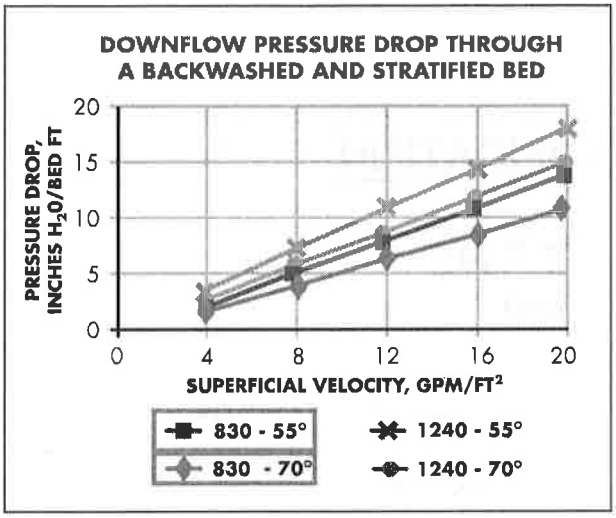

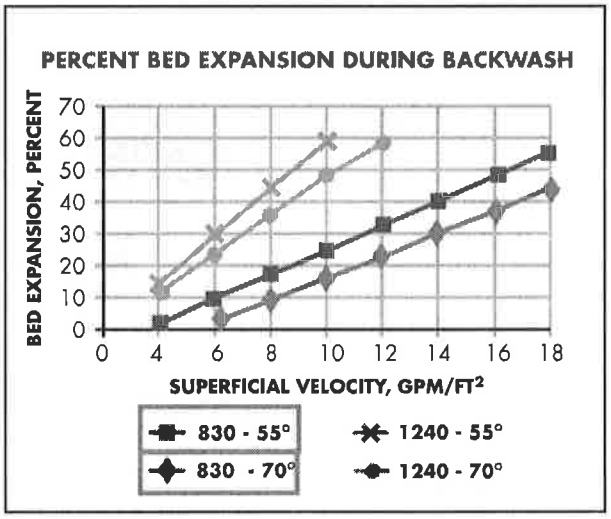

Safety Note: Wet activated carbon depletes oxygen from the air and therefore dangerously low levels of oxygen may be encountered. Whenever workers enter a vessel containing activated carbon, the vessel's oxygen content should be determined and work procedures for potentially low oxygen areas should be followed. Read Material Safety Data Sheet (MSDS) before using this product.

All information presented herein is believed reliable and in accordance with accepted engineering practices. USFilter makes no warranties as to the completeness of this information. Users are responsible for evaluating individual product suitability for specific applications. USFilter assumes no liability whatsoever for any special, indirect or consequential damages arising from the sale, resale or misuse of its products.

SPECIFICATIONS/TYPICAL PROPERTIES		
Specification	**AquaCarb® 830**	**AquaCarb® 1240**
Carbon Type	Bituminous Coal	Bituminous Coal
Mesh Size, U.S. Sieve	8 x 30	12 x 40
Effective Size, mm	0.8 - 1.1	0.55 - 0.75
Uniformity Coefficient (max)	2.1	1.9
Iodine No., mgI_2/g (min.)	900	1000
Abrasion No., Wt. % (min.)	80	80
Apparent Density, g/cc	0.46 - 0.54	0.46 - 0.54

USFilter reserves the right to change the specifications referred to in this literature at any time, without prior notice. AquaCarb is a trademark of United States Filter Corporation or its affiliates.

USFilter

Westates
Customer and
Technical Service Network:

Gulf Coast Region 800.659.1723
(Louisiana) 225.744.3153
Western Region 800.659.1771
Mid-Atlantic Region 800.659.1717
Midwest Region 708.345.7290
Northwest Region 800.659.1718
Southeast Region 225.744.3153
New England Region 800.659.1717

www.usfilter.com

WS-AQ83-DS-0704

©2004 United States Filter Corporation

USFilter

WESTATES CARBON
15319 Carmenita Avenue
Santa Fe Springs, CA 90670

TOLL FREE 800.659.1771
TELEPHONE 562.229.9606
FACSIMILE 562.229.9322

CARBON SPECIFICATION

AQUACARB™ NS
(Reactivated)

ANALYSIS	SPECIFICATIONS
Type	Reactivated Bituminous Coal
PSD, U.S. Standard Mesh Size	8x30 mesh, 5% max. over, 5% max. under
Iodine Number, mgI_2/g	850 min. 950 typical
Abrasion Number, wt. %	75 min.
Moisture as Packed, wt. %	2% max.
Apparent Density, g/cc	0.46 - 0.58

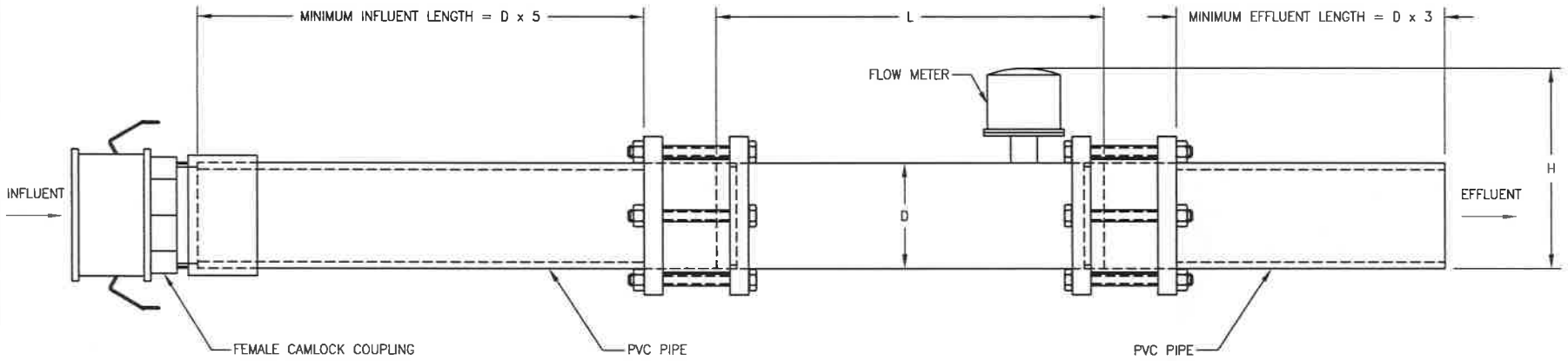

FLOW METER ASSEMBLY

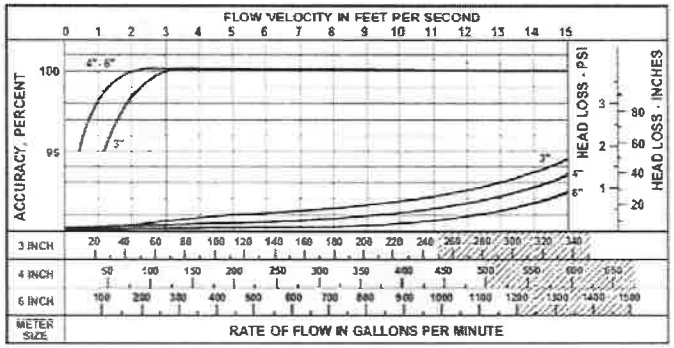

ACCURACY AND HEAD LOSS CURVES
(3"/4"/6" FLOW METERS)

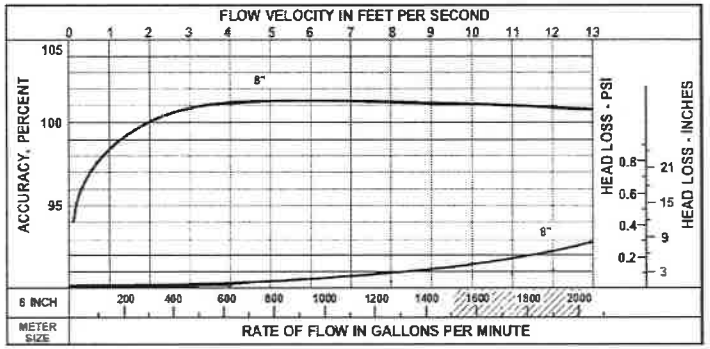

ACCURACY AND HEAD LOSS CURVES
(8" FLOW METER)

MG100 FLOW METER SPECIFICATIONS

	3	4	6	8
– METER SIZE, D (INCHES):				
– MAXIMUM FLOW U.S. GPM:	250	600	1200	1500
– MINIMUM FLOW U.S. GPM:	40	50	90	100
– HEAD LOSS IN INCHES AT MAX. FLOW:	29.50	23.00	17.00	6.75
– H (INCHES):	10.9	12.78	13.84	14.84
– L (INCHES):	13	20	20	20
– O.D. OF METER TUBE:	3.50	4.50	6.625	8.625
– MIN. INFLUENT LENGTH (INCHES):	15	20	30	40
– MIN. EFFLUENT LENGTH (INCHES):	9	12	18	24

– MAXIMUM TEMPERATURE: 160°F CONSTANT

– PRESSURE RATING: 150 PSI

NO.	REVISIONS	DATE
A	TYPICAL	01/28/09

FLOW METER ASSEMBLY STANDARD EQUIPMENT SPECIFICATION

SCALE: NTS	APPROVED BY: JB	DRAWN BY: AAV	
DATE: 01/28/09			

GROUND/WATER TREATMENT & TECHNOLOGY
P.O. BOX 1174
DENVILLE, NJ 07834

THIS DRAWING IS THE PROPERTY OF
GROUND/WATER TREATMENT & TECHNOLOGY, INC

DWG SIZE: A	SHEET: 1 OF 1	DRAWING NUMBER: ST-0052-SPC	A

T:\Cad Files\Rentals - STANDARD DRAWINGS\EQUIPMENT SPECIFICATIONS\FLOW METERS\ST-0052-SPC Rev-A Flow Meter Assembly.dwg

MORETRENCH

....since 1931

DCA-220SSVU

From stationary standby power sources to mobile construction applications, MQ Power's WhisperWatt portable generators will meet your most demanding requiremens.

WhisperWatt generators have been engineered to provide the highest reliability and maximum motor starting capability.

Performance Data

Standby Output	194 kW , 242 kVA
Prime Output	176 kW , 220 kVA
Generator RPM	1800 RPMs
Generator Design	Revolving Field Self-Ventilated Dip-Proof Single Bearing
Voltage Regulation - (No Load to Full Load)	1 %
Power Factor	0.8
Armature Connection	Star with Neutral
Excitation	Brushless with AVR
No. Poles	4 Pole
Frequency	60 Hz
Available Voltages - 3 Phase	208, 220, 240, 416,440, 480 Reconnectable Volts
Available Voltages - Single Phase	120, 127, 139, 240, 254, 277 Adjustable Volts
Amps - Single Phase 120V	488.9 (4 Wire) Amps
Amps - Single Phase 240V	244.4 (4 Wire) Amps
Amps - Three Phase 240V	529 Amps
Amps - Three Phase 480V	265 Amps
Insulation	Class F
Sound Level dB(A) - Full Load at 23 feet	72 dB(A)

Power Source

Engine Make / Model	Volvo TAD741GE

Dimensions

Overall Length	144 in. , 365 cm
Overall Width	52 in. , 130 cm
Overall Height	69 in. , 175 cm
Approx. Net Wt. Dry	7696 lbs., 3490 kg.

Appendix C

- **System Overview**

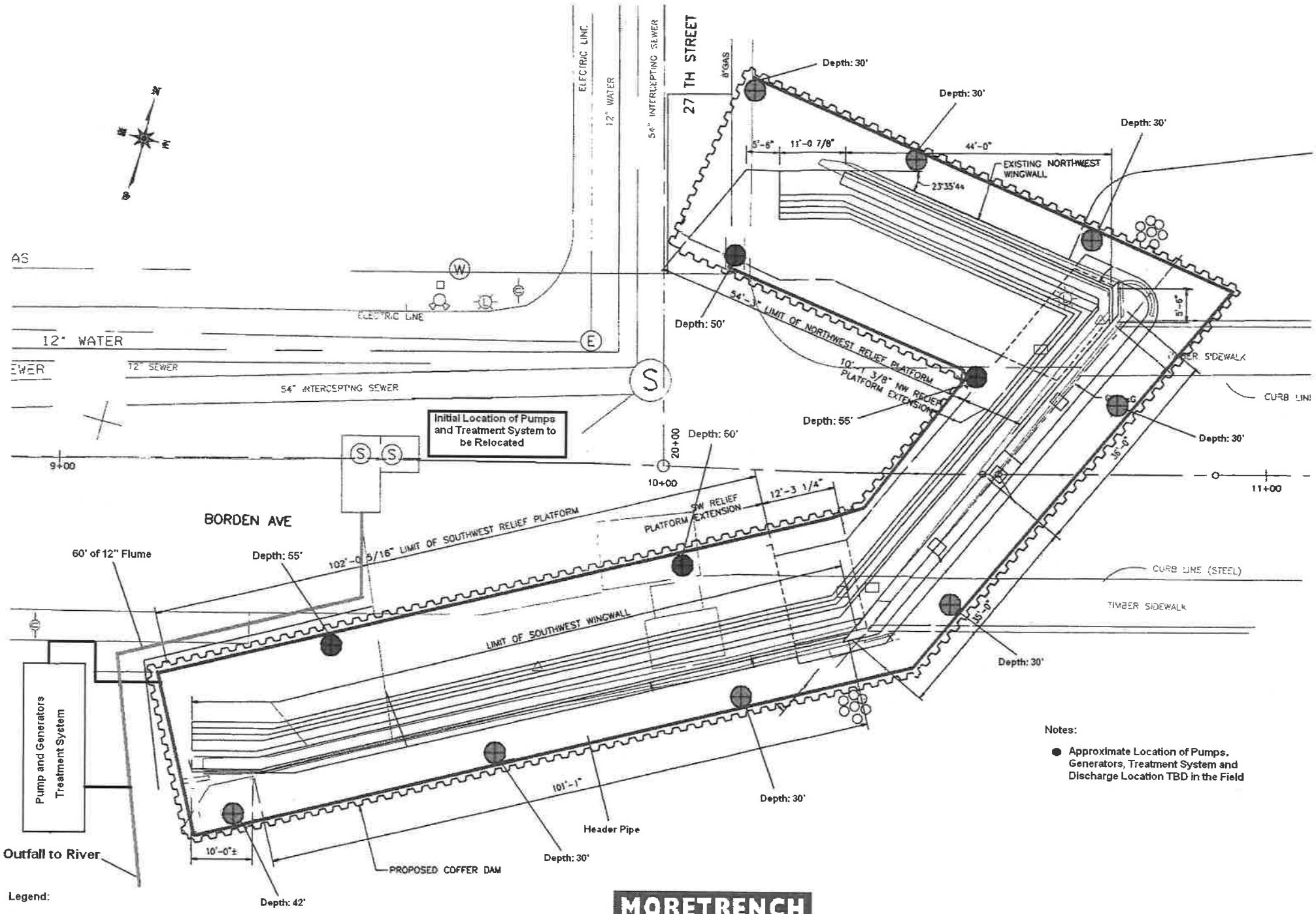

MORETRENCH

Borden Avenue
Dewatering Layout
7-9-09

MORETRENCH

....since 1931

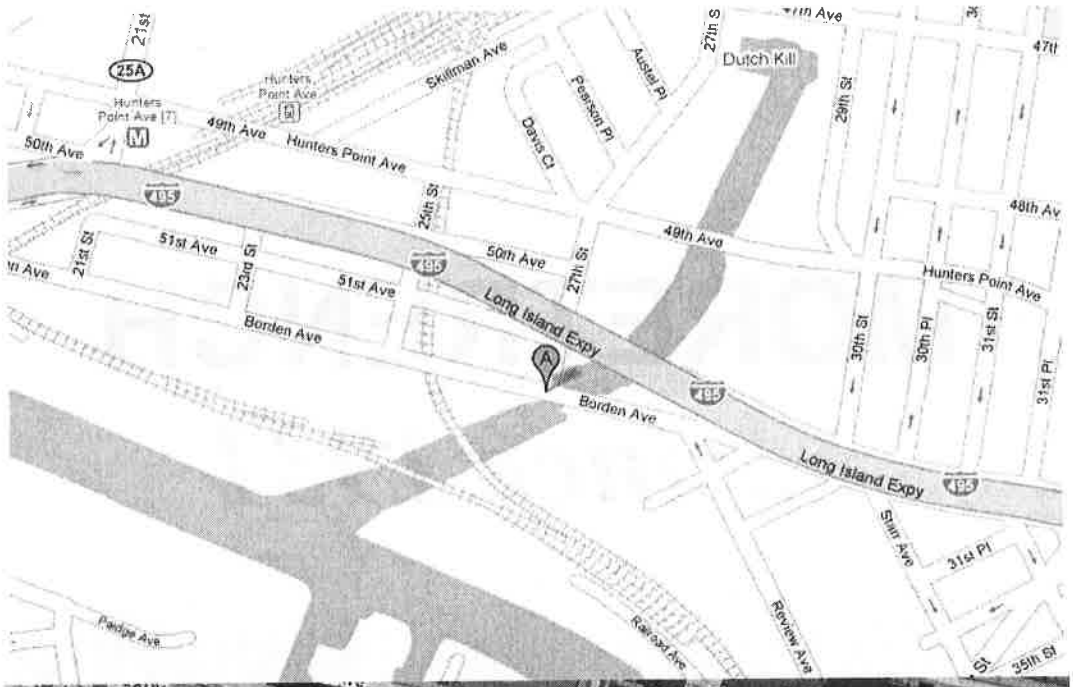

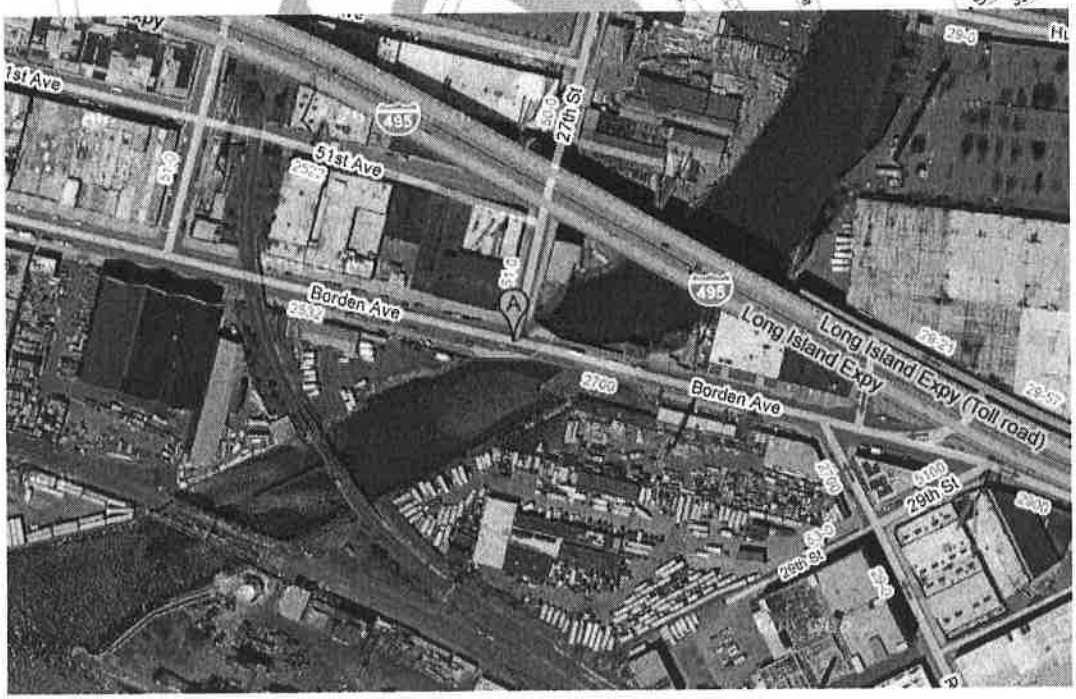

Borden Avenue Bridge
Queens, NY
7/23/09

MORETRENCH
....since 1931

- **BORED PILES & SHAFTS**
- **CUTOFF/CONTAINMENT WALLS**
- **DEWATERING**
- **GROUND FREEZING**
- **GROUNDWATER REMEDIATION**
- **INDUSTRIAL INFRASTRUCTURE**
- **LANDFILL GAS/LEACHATE SYSTEMS**
- **SOIL MODIFICATION/SOIL STABILIZATION**

APPENDIX E – SPDES PERMIT EQUIVALENT APPLICATION

New York State Department of Environmental Conservation
Division of Water
Bureau of Water Permits, 4th Floor
625 Broadway, Albany, New York 12233-3505
Phone: (518) 402-8111 • **FAX:** (518) 402-9029

Website: www.dec.state.ny.us

Denise M. Sheehan
Commissioner

SPDES PERMIT EQUIVALENT *APPLICATION* REQUIREMENTS
REMEDIATION DISCHARGES TO SURFACE OR GROUNDWATERS

To request effluent criteria for direct discharges of remediation wastewaters, please provide the following:

1. **Discharge rate (i.e. treatment system design capacity);**

- *The treatment system has been designed for the following discharge rates*
  - *864,000 gpd (Maximum)*
  - *432,000 gpd (Minimum)*
  - *720,000 gpd (Daily average)*

2. **A brief description/flow diagram for the proposed treatment system;**

- *A schematic flow diagram of the proposed system is presented in Appendix F of the project Corrective Action Plan*

3. **A description of the receiving stream, including an accurate USGS map showing the stream and discharge location. When available, provide latitude and longitude of discharge point;**

- *The receiving stream is the Dutch Kills, a tributary of the Newtown Creek. The discharge location is shown on Figure 1 – Site Location Map of the Corrective Action Plan. The discharge location is at N 40° 44' 19.98", W 73° 56' 36.97".*

4. **Available wastewater monitoring data in the attached tabular format, prepared using the attached tables 6- 10;**

- *Available wastewater sampling data is presented in attached tables as applicable.*

5. **The proposed first day of discharge (for pump test discharges please do not encourage pump tests during summer low flow periods);**

- *Due to Emergency Bridge Repair status of the Borden Avenue Bridge, the applicant requests approval to discharge as soon as possible.*

6. **Proposed duration of discharge;**

- *The discharge duration is estimated to be three months.*

7. **State whether it is a potentially responsible party, federal superfund or state superfund site, or if the site is a Brownfields site;**

- *The site is a NYSDEC Spills site.*

8. **The name and telephone number of the responsible DER project manager to contact if we have questions or want to borrow a copy of the RI report;**

- *Ms. Veronica Zhune (718) 482-7305*
  NYSDEC Division of Environmental Remediation
  Hunters Point Plaza
  47-20 21st Street
  Long Island City, NY 11101

9. **The DER Site number (i.e., 1-01-001);**

- *Spills Case Number 0903437*

10. **The DER contact/address where compliance monitoring data is to be sent;**

- *Ms. Veronica Zhune (718) 482-7305*
  NYSDEC Division of Environmental Remediation
  Hunters Point Plaza
  47-20 21st Street
  Long Island City, NY 11101

11. **For discharges that will have iron in excess of 0.3 mg/l:**
    a. provide monitoring data for iron from both filtered and unfiltered samples.
    b. If the discharge is to groundwater please provide monitoring data for iron from both filtered and unfiltered samples from monitoring wells not influenced by site contamination.
    c. If the discharge is to a relatively small stream compared to the discharge, please provide monitoring data for iron from both filtered and unfiltered samples from and upstream point of the receiving water.

- *There is no available sampling data for iron from the discharge.*

Please note that it is not unusual for a DOW review to take 8 weeks. Please inform responsible parties to plan on submitting requests for effluent criteria at least 8 weeks in advance of the proposed first day of discharge. If you have any questions or comments, please do not hesitate to call one of the following BWP section chiefs:

Al Fuchs 402-8238 (regions 1-3), Shayne Mitchell 402-8125 (regions 4-6), or Brian Baker 402-8124(regions 7-9).

TABLE 6

PRIORITY POLLUTANTS (From: 40CFR Part 122, Appendix D)

Include monitoring results for any of the pollutants listed below that are believed present in the discharge from any outfall at your facility.

GC/MS Volatile fraction compounds:

CAS #	Pollutant Name
00107-02-8	Acrolein[1]
00107-13-1	Acrylonitrile[1]
00071-43-2	Benzene
00075-25-2	Bromoform
00056-23-5	Carbon Tetrachloride
00108-90-7	Chlorobenzene
00124-48-1	Chlorodibromomethane
00075-00-3	Chloroethane
00110-75-8	2-Chloroethylvinyl ether
00067-66-3	Chloroform
00075-27-4	Dichlorobromomethane
00075-34-3	1,1-Dichloroethane
00107-06-2	1,2-Dichloroethane
00075-35-4	1,1-Dichloroethylene
00078-87-5	1,2-Dichloropropane
00542-75-6	1,3-Dichloropropylene
00100-41-4	Ethylbenzene
00074-83-9	Methyl Bromide[1]
00074-87-3	Methyl Chloride
00075-09-2	Methylene Chloride
00079-34-5	1,1,2,2-Tetrachloroethane
00127-18-4	Tetrachloroethylene
00108-88-3	Toluene
00156-60-5	1,2-trans-Dichloroethylene
00071-55-6	1,1,1-Trichloroethane
00079-00-5	1,1,2-Trichloroethane
00079-01-6	Trichloroethene
00075-01-4	Vinyl Chloride

GC/MS Acid Fraction Compounds:

CAS #	Pollutant Name
00095-57-8	2-Chlorophenol
00120-83-2	2,4-Dichlorophenol
00105-69-7	2,4-Dimethylphenol
00534-52-1	4,6-Dinitro-o-cresol[1]
00051-28-5	2,4-Dinitrophenol
00088-75-5	2-Nitrophenol
00100-02-7	4-Nitrophenol
00059-50-7	p-Chloro-m-cresol
00087-86-5	Pentachlorophenol[1]
00108-95-2	Phenol
00088-06-2	2,4,6-Trichlorophenol

GC/MS Base/Neutral fraction compounds

CAS #	Pollutant Name	
00083-32-9	**Acenaphthene**	**3.6J**
00208-96-8	**Acenaphthylene**	**2.2J**
00120-12-7	**Anthracene[1]**	**5.4J**
00092-87-5	Benzidine	
00056-55-3	**Benz(a)anthracene[1]**	**8.6J**
00050-32-8	**Benzo(a)pyrene[1]**	**5.3J**
00205-99-4	3,4-Benzofluoranthene[1]	
00191-24-2	Benzo(ghi)perylene[1]	
00207-08-9	**Benzo(k)fluoranthene**	**1.7J**
00111-91-1	Bis(2-chloroethoxy)methane	
00111-44-4	Bis(2-chloroethyl)ether	
00102-60-1	Bis(2-chloroisopropyl)ether	
00117-81-7	**Bis(2-ethylhexyl)phthalate**	**290**
00101-55-3	4-Bromophenyl phenyl ether[1]	
00085-68-7	Butylbenzyl phthalate	
00091-58-7	2-Chloronaphthalene	
07005-72-3	4-Chlorophenyl phenyl ether[1]	
00218-01-9	**Chrysene[1]**	**8.3J**
00053-70-3	**Dibenz(a,h)anthracene[1]**	**3.1J**
00095-50-1	1,2-Dichlorobenzene	
00541-73-1	1,3-Dichlorobenzene	
00106-46-7	1,4-Dichlorobenzene	
00091-94-1	3,3'-Dichlorobenzidine	
00084-66-2	Diethyl phthalate	
00131-11-3	Dimethyl phthalate	
00084-74-2	Di-n-butyl phthalate	
00606-20-2	2,6-Dinitrotoluene	
00117-84-0	Di-n-octyl phthalate	
00122-66-7	1,2-Diphenylhydrazine	
00206-44-0	**Fluroranthene[1]**	**17J**
00086-73-7	**Fluorene**	**3.5J**
00118-74-1	Hexachlorobenzene[1]	
00087-68-3	Hexachlorobutadiene[1]	
00077-47-4	Hexachlorocyclopentadiene	
00067-72-1	Hexachloroethane[1]	
00193-39-5	**Indeno(1,2,3-cd)pyrene[1]**	**4J**
00078-59-1	Isophorone	
00091-20-3	Naphthalene	1.9J
00098-95-3	Nitrobenzene	
00062-75-9	N-nitrosodimethylamine	
00621-64-7	N-nitrosodi-n-propylamine	
00086-30-6	N-nitrosodiphenylamine	
00085-01-8	**Phenanthrene[1]**	**13J**
00129-00-0	**Pyrene[1]**	**19J**
00120-82-1	1,2,4-Trichlorobenzene[1]	

GC/MS Pesticides fraction compounds:

CAS #	Pollutant Name
00309-00-2	Aldrin[1]
00319-84-6	alpha-BHC[1]
00319-85-7	beta-BHC[1]
00058-89-9	gamma-BHC (Lindane)[1]
00319-86-8	delta-BHC[1]
00057-74-9	Chlordane[1]
00050-29-3	4,4'-DDT[1]
00072-55-9	4,4'-DDE[1]
00072-54-8	4,4'-DDD[1]
00060-57-1	Dieldrin[1]
00959-98-8	alpha-Endosulfan[1]
33213-65-9	beta-Endosulfan
01031-07-8	Endosulfan sulfate
00072-20-8	Endrin[1]
07421-93-4	Endrin aldehyde
00076-44-8	Heptachlor[1]
01024-57-3	Heptachlor epoxide[1]
53469-21-9	**PCB-1242[1]** **1.6**
11097-69-1	**PCB-1254[1]** **2.3**
11104-28-2	PCB-1221[1]
11141-16-5	PCB-1232[1]
12672-29-6	PCB-1248[1]
11096-82-5	**PCB-1260[1]** **2.2**
12674-11-2	PCB-1016[1]
08001-35-2	Toxaphene[1]

Dioxin:

01764-01-6	2,3,7,8-Tetrachlorodibenzo-p-dioxin[1,2]

Metals and Other Toxic Pollutants:

CAS #	Pollutant Name	
07440-36-0	**Antimony, Total**	**16.2J**
07440-38-2	**Arsenic, Total**	**25.8**
07440-41-7	Beryllium, Total	
07440-43-9	**Cadmium Total**	**13.1**
07440-47-3	**Chromium, Total**	**101**
07440-50-8	**Copper, Total**	**290**
07439-92-1	**Lead, Total**	**280**
07439-97-6	**Mercury, Total[1]**	**0.44**
07440-02-0	**Nickel, Total**	**126**
07782-49-2	Selenium, Total	
07440-22-4	Silver, Total	
07440-28-0	Thallium, Total[1]	
07440-66-6	**Zinc, Total**	**506**
00057-12-5	Cyanide, Total	
	Phenols, Total[3]	
01332-21-4	Asbestos	

Notes: 1. These pollutants either have FDA fish flesh concentration limits, are identified as Bioaccumulative Chemicals of Concern (BCCs), or are restricted pesticides. .

2. Dioxin is not listed in Part 122, Appendix D, but is a priority pollutant.

3. Phenols, Total is not a Priority Pollutant but is considered a Toxic Substance for permit classification purposes.

TABLE 7

Other Significant Pollutants with NYSDEC Standards/Guidance Values and USEPA/NYSDEC Promulgated Analytical Methods

Include monitoring results for any of the pollutants listed below that are believed present in the discharge from any outfall at your facility.

A. Base/Neutral/Acid Compounds:

CAS Number	Parameter Name
00092-67-1	4-Aminobiphenyl
00062-53-3	Aniline
00140-57-8	Aramite
00106-47-8	4-Chloroaniline
00119-93-7	3,3'-Dimethylbenzidine
00122-09-8	α,α-Dimethylphenethylamine
00099-65-0	1,3-Dinitrobenzene
00122-39-4	Diphenylamine
00070-30-4	Hexachlorophene
01888-71-7	Hexachloropropene
00099-55-8	5-Nitro-o-toluidine
00088-74-4	2-Nitroaniline
00099-09-2	3-Nitroaniline
00100-01-6	4-Nitroaniline
00608-93-5	Pentachlorobenzene[1]
00106-50-3	1,4-Phenylenediamine
00298-02-2	Phorate
00095-94-3	1,2,4,5-Tetrachlorobenzene[1]
00095-53-4	o-Toluidine
00099-35-4	1,3,5-Trinitrobenzene, sym-

B. Conventional Compounds and Metals:

CAS Number	Parameter Name
07664-41-7	Ammonia/ammonium
24959-67-9	Bromide
	Chloride
	Color
	Coliform, Fecal
	Coliform, Total
16984-48-8	Fluoride
	Nitrogen, Nitrate
	Nitrogen, Nitrite
	Methylene Blue Active Substances
07723-14-0	Phosphorus (as P), Total
	Radioactivity
	Alpha, Total
	Beta, Total
	Radium, Total
	Radium 226, Total
	Solids, Settleable
14808-79-8	Sulfate (as SO4)
	Sulfide (as S)
14265-45-3	Sulfite (as SO3)
	Cyanide, Amenable to Chlorination
07440-47-3	Chromium, Hexavalent
07439-90-5	Aluminum, Total
07440-39-3	Barium, Total
07440-42-8	Boron, Total
07440-48-4	Cobalt, Total
07439-89-6	Iron, Total
07439-95-4	Magnesium, Total
07439-98-7	Molybdenum, Total
07439-96-5	Manganese, Total
07440-23-5	Sodium, Total
07440-31-5	Tin, Total
07440-32-6	Titanium, Total
07440-62-2	Vanadium, Total

C. Volatile Organic Compounds:

CAS Number	Parameter Name	
00067-64-1	Acetone	16 ug/L
00107-05-1	Allyl chloride	
00126-99-8	Chloroprene	
00074-95-3	Dibromomethane	
00110-57-6	trans-1,4-Dichloro-2-butene	
00075-71-8	Dichlorodifluoromethane	
00156-59-2	cis-1,2-Dichloroethylene	
10061-01-5	cis-1,3-Dichloropropene	
10061-02-6	trans-1,3-Dichloropropene	
00106-93-4	Ethylene dibromide (EDB)	
00107-21-1	Ethylene glycol	
00591-78-6	2-Hexanone	
00126-98-7	Methacrylonitrile	
00078-93-3	Methyl ethyl ketone	
00074-88-4	Methyl iodide (Iodomethane)	
00080-62-6	Methyl methacrylate	
00076-01-7	Pentachloroethane	
00110-86-1	Pyridine	
00100-42-5	Styrene	
00630-20-6	1,1,1,2-Tetrachloroethane	
00075-69-4	Trichlorofluoromethane	
00096-18-4	1,2,3-Trichloropropane	
00095-47-6	Xylene, Ortho- (1,2-)	
00108-38-3	Xylene, Meta- (1,3-)	
00106-42-3	Xylene, Para- (1,4-)	

D. Pesticides:

CAS Number	Parameter Name
15972-60-8	Alachlor
00116-06-3	Aldicarb
00834-12-8	Ametryn
02032-59-9	Aminocarb (Metacil)
01610-17-9	Atraton
01912-24-9	Atrazine
00086-50-0	Azinphosmethyl
00101-27-9	Barban
01861-40-1	Benefin
00314-40-9	Bromacil
23184-66-9	Butachlor
00133-06-2	Captan
00063-25-2	Carbaryl[1]
01563-66-2	Carbofuran[1]
00075-99-0	Dalapon
00298-03-3	Demeton (-o)[1]
00126-75-0	Demeton (-S)[1]
00333-41-5	Diazinon
00096-12-8	1,2-Dibromo-3-chloropropane
01918-00-9	Dicamba
00094-75-7	2,4-Dichlorophenoxyacetic acid (2,4-D)[1]
00088-85-7	Dinoseb[1]
00298-04-4	Disulfoton
14484-64-1	Ferbam
02164-17-2	Fluometuron
01071-83-6	Glyphosate (Roundup)[1]
00608-73-1	Hexachlorocyclohexanes
51235-04-2	Hexazinone
00465-73-6	Isodrin
33820-53-0	Isopropalin[1]
00143-50-0	Kepone
00121-75-5	Malathion
08018-01-7	Mancozeb
12427-38-2	Maneb
16752-77-5	Methomyl[1]
00072-43-5	Methoxychlor[1]
00298-00-0	Methyl parathion[1]
00094-74-6	2-Methyl-4-chloro-phenoxyacetic acid; MCPA
21087-64-9	Metribuzin
02385-85-5	Mirex[1] (Hexachloropentadiene)
00142-59-6	Nabam
23135-22-0	Oxamyl[1]
00056-38-2	Parathion[1]
00082-68-8	Pentachloronitrobenzene
01610-18-0	Prometon
01918-16-7	Propachlor
00139-40-2	Propazine
00122-42-9	Propham[1]
00122-34-9	Simazine
05902-51-2	Terbacil[1]
13071-79-9	Terbufos[1]
00093-76-5	2,4,5-Trichlorophenoxyacetic
01582-09-8	Trifluralin
12122-67-7	Zineb
00137-30-4	Ziram

Notes: 1. These pollutants either have FDA fish flesh concentration limits, are identified as Bioaccumulative Chemicals of Concern (BCCs), or are restricted pesticides.

TABLE 8

Other Significant Pollutants with USEPA/NYSDEC Promulgated Analytical Methods

Include monitoring results for any of the pollutants listed below that are believed present in the discharge from any outfall at your facility.

CAS Number	Pollutant Name
	AOP (Ambam oxidation product)
00075-05-8	Acetonitrile
00098-86-2	Acetophenone
17804-35-2	Benomyl
25057-89-0	Bentazon
00100-51-6	Benzyl alcohol
00100-44-7	Benzyl chloride
35400-43-2	Bolstar (Sulprofos)
51026-28-9	Busan 40
00128-03-0	Busan 85
07440-70-2	Calcium, Total
00128-04-1	Carbam S
10605-21-7	Carbendazim
00075-15-0	Carbon disulfide [1]
00786-19-6	Carbophenothion (Trithion) [1]
03734-48-3	Chlordene
00093-65-2	2-(4-Chloro-2-methylphenoxy)propionic acid;
00510-15-6	Chlorobenzilate
00101-21-3	Chloropropham
05836-10-2	Chloropropylate
02921-88-2	Chlorpyrifos
05598-13-0	Chlorpyrifos methyl
00056-72-4	Coumaphos
21725-46-2	Cyanazine
00094-82-6	2,4-DB
00134-62-3	DEET
02303-16-4	Diallate
00132-64-9	**Dibenzofuran 2.1J**
00097-17-6	Dichlofenthion
00099-30-9	Dichloran
00087-65-0	2,6-Dichlorophenol
00062-73-7	Dichlorvos
00115-32-2	Dicofol
00297-97-2	o,o-Diethyl-o-2-pyrazinyl phosphorothioate
00060-51-5	Dimethoate
00057-97-6	7,12-Dimethylbenz(a)anthracene
00123-91-1	1,4-Dioxane; diethylene dioxide
00078-34-2	Dioxathion
00330-54-1	Diuron
55283-68-6	Ethalfluralin
00563-12-2	Ethion
00097-63-2	Ethyl methacrylate
00062-50-0	Ethyl methane sulfonate
02593-15-9	Etridiazole
00052-85-7	Famphur
68876-78-8	Fecal Streptococci
00115-90-2	Fensulfothion
00055-38-9	Fenthion (Baytex) [1]
00101-42-8	Fenuron
04482-55-7	Fenuron-TCA
00050-00-0	Formaldehyde
07440-57-5	Gold, Total
03389-71-7	Hexachlorobicycloheptadiene
07439-88-5	Iridium, Total
00078-83-1	Isobutyl alcohol
00120-58-1	Isosafrole
00128-03-0	KN Methyl
00330-55-2	Linuron
26544-20-7	MCPA isooctyl ester
00950-10-7	Mephosfolan

CAS Number	Pollutant Name
00137-42-8	Metham
02032-65-7	Methyl carbamate; methiocarb [1]
00066-27-3	3-Methyl methanesulfonate
00953-17-3	Methyl trithion
00108-10-1	4-Methyl-2-pentanone; Methyl isobutyl ketone
00056-49-5	3-Methylcholanthrene
00091-57-6	2-Methylnaphthalene 2.5J
00095-48-7	2-Methylphenol; o-Cresol
00108-39-4	3-Methylphenol; m-Cresol
00106-44-5	4-Methylphenol; p-Cresol
07786-34-7	Mevinphos [1]
00315-18-4	Mexacarbate [1]
00150-68-5	Monuron
00140-41-0	Monuron-TCA
10595-95-6	N-Nitrosomethylethylamine
00059-89-2	N-Nitrosomorpholine
00100-75-4	N-Nitrosopiperidine
00930-55-2	N-Nitrosopyrrolidine
00300-76-5	Naled
00134-32-7	1-Naphthylamine
00091-59-8	2-Naphthylamine
00130-15-4	1,4-Napthoquinone
00555-37-3	Neburon
15339-36-3	Niacaide
00056-57-5	4-Nitroquinoline-1-oxide
07440-04-2	Osmium, Total
07440-05-3	Palladium, Total
00072-56-0	Perthane
00062-44-2	Phenacetin
	Phosphorus, Orthophosphate
00109-06-8	Picoline, alpha-
07440-06-4	Platinum, Total
07440-09-7	Potassium, Total
26399-36-0	Profluralin
07287-19-6	Prometryn
23950-58-5	Pronamide
00107-12-0	Propionitrile
00114-26-1	Propoxur
07440-15-5	Rhenium
07440-16-6	Rhodium, Total
00299-84-3	Ronnel
07440-18-8	Ruthenium, Total
00094-59-7	Safrole
26259-45-0	Secbumeton
01982-49-6	Siduron
07631-86-9	Silica, Dissolved
01014-70-6	Simetrin
00961-11-5	Stirofos [1]
08001-50-1	Strobane [1]
01918-18-9	Swep
05915-41-3	Terbuthylazine
00886-50-0	Terbutryn
00058-90-2	2,3,4,6-Tetrachlorophenol
03689-24-5	Tetraethyl dithiopyrophosphate
43121-43-3	Triadimefon
00327-98-0	Trichloronate
00095-95-4	2,4,5-Trichlorophenol
32534-95-5	2,4,5-Trichlorophenoxyacetic acid, isooctyl ester
41814-78-2	Tricyclazole
00126-68-1	o,o,o-Triethylphosphorothioate
00108-05-4	Vinyl acetate
38714-47-5	ZAC (Zinc ammonium carbonates, etc)

Notes: 1. These pollutants either have FDA fish flesh concentration limits, are identified as Bioaccumulative Chemicals of Concern (BCCs), or are restricted pesticides.

TABLE 9
Other Significant Pollutants with NYSDEC Standards/Guidance Values

Identify any of the pollutants listed below that are believed present in the discharge from any outfall at your facility on the Industrial Chemical Survey form. No USEPA/NYSDEC analytical methods have been promulgated for the pollutants in Table 9. Provide analytical results, if available, as directed in Section III Items 2.A.i. and ii. of the instructions or as an attachment to this application.

CAS Number	Pollutant Name
00079-06-1	Acrylamide
00079-10-7	Acrylic acid
01646-88-4	Aldicarb sulfone
01646-87-3	Aldicarb sulfoxide
68391-01-5	Alkyl dimethyl benzyl ammonium chloride
	Alkyl diphenyl oxide sulfonates
00095-84-1	2-Amino-para-cresol
02835-99-6	4-Amino-meta-cresol
02835-95-2	5-Amino-ortho-cresol
	Aminomethylene phosphonic acid salts
26445-05-6	Aminopyridine
00504-29-0	2-Aminopyridines
00462-08-8	3-Aminopyridines
00504-24-5	4-Aminopyridines
00108-44-1	3-Aminotoluene
00106-49-0	4-Aminotoluene
00100-66-3	Anisole
	Aryltriazoles
00103-33-3	Azobenzene
00098-87-3	Benzal chloride
00271-61-4	Benzisothiazole
00098-07-7	Benzoic trichloride
25973-55-1	2-(2-hydroxy-3,5-di-tert-pentylphenyl)Benzotriazole
00092-52-4	1,1'-Biphenyl
00542-88-1	Bis(chloromethyl)ether
	Boric acid, Borates and Metaborates
00108-86-1	Bromobenzene
00074-97-5	Bromochloromethane
31600-69-8	4-(1-methylethoxy)-1-Butanol
15798-64-8	cis-2-Butenal
00123-73-9	trans-2-Butenal
01190-76-7	cis-2-Butenenitrile
00627-26-9	trans-2-Butenenitrile
00112-34-5	Butoxyethoxyethanol
05131-66-8	Butoxypropanol
	Butyl isopropyl phthalate
02008-41-5	Butylate
00104-51-8	n-Butylbenzene
00135-98-8	sec-Butylbenzene
00098-06-6	tert-Butylbenzene
05234-68-4	Carboxin
00133-90-4	Chloramben
00118-75-2	Chloranil
	Chlorinated dibenzofurans
00460-35-5	3-Chloro-1,1,1-trifluoropropane
00095-69-2	4-Chloro-o-toluidine
00095-79-4	5-Chloro-o-toluidine
00095-51-2	2-Chloroaniline
00108-42-9	3-Chloroaniline
00098-56-6	4-Chlorobenzotrifluoride
00109-69-3	1-Chlorobutane
00107-30-2	Chloromethyl methyl ether
00088-73-3	2-Chloronitrobenzene
00121-73-3	3-Chloronitrobenzene
00100-00-5	4-Chloronitrobenzene
01897-45-6	Chlorothalonil
00095-49-8	2-Chlorotoluene
00108-41-8	3-Chlorotoluene
00106-43-4	4-Chlorotoluene
00506-68-3	Cyanogen bromide
00506-77-4	Cyanogen chloride
13560-89-9	Dechlorane Plus [1]
08065-48-3	Demeton (Systox)
00103-23-1	Di(2-ethylhexyl)adipate
10222-01-2	2,2-Dibromo-3-nitrilopropionamide
03252-43-5	Dibromoacetonitrile
00583-53-9	1,2-Dibromobenzene
00108-36-1	1,3-Dibromobenzene
00106-37-6	1,4-Dibromobenzene
00594-18-3	Dibromodichloromethane
01476-11-5	cis-1,4-Dichloro-2-butene
00328-84-7	3,4-Dichlorobenzotrifluoride
00075-71-8	Dichlorodifluoromethane
00075-43-4	Dichlorofluoromethane
00078-99-9	1,1-Dichloropropanes
00142-28-9	1,3-Dichloropropanes
00594-20-7	2,2-Dichloropropanes
00563-58-6	1,1-Dichloropropene
00098-87-3	α,α-Dichlorotoluene
32768-54-0	2,3-Dichlorotoluenes
00095-73-8	2,4-Dichlorotoluenes
19398-61-9	2,5-Dichlorotoluenes
00118-69-4	2,6-Dichlorotoluenes
00095-75-0	3,4-Dichlorotoluenes
25186-47-4	3,5-Dichlorotoluenes
00076-12-0	1,2-Difluoro-1,1,2,2-tetrachloroethane
00100-18-5	1,4-Diisopropyl benzene
00577-55-9	1,2-Diisopropylbenzene
00099-62-7	1,3-Diisopropylbenzene
00121-69-7	N,N-Dimethyl aniline
01861-32-1	Dimethyl tetrachloroterephthalate
00087-59-2	2,3-Dimethylaniline
00095-68-1	2,4-Dimethylaniline
00095-78-3	2,5-Dimethylaniline
00087-62-7	2,6-Dimethylaniline
00095-64-7	3,4-Dimethylaniline
00108-69-0	3,5-Dimethylaniline
01875-92-9	Dimethylbenzylammonium chloride
00538-39-6	4,4'-Dimethylbibenzyl
04957-14-6	4,4'-Dimethyldiphenylmethane
05197-80-8	Dimethylethylbenzylammonium chloride
00068-12-2	Dimethylformamide
25321-14-6	Dinitrotoluene (mixed isomers)
00602-01-7	2,3-Dinitrotoluene
00619-15-8	2,5-Dinitrotoluene
00610-39-9	3,4-Dinitrotoluene
00618-85-9	3,5-Dinitrotoluene
00957-51-7	Diphenamid
00530-50-7	1,1-Diphenylhydrazines
00085-00-7	Diquat dibromide
02439-10-3	Dodecylguanidine acetate
13590-97-1	Dodecylguanidine hydrochloride
00479-18-5	Dyphilline
00145-73-3	Endothall
53494-70-5	Endrin ketone
00107-07-3	Ethylene chlorohydrin
00075-21-8	Ethylene oxide
00096-45-7	Ethylenethiourea
00133-07-3	Folpet
00093-14-1	Guaifenesin
06108-10-7	Hexachlorocyclohexanes (epsilon)
00302-01-2	Hydrazine
07783-06-4	Hydrogen sulfide
00123-31-9	Hydroquinone
02809-21-4	1-Hydroxyethylidene-1,1-diphosphonic acid
29761-21-5	Isodecyl diphenyl phosphate

TABLE 9
Other Significant Pollutants with NYSDEC Standards/Guidance Values (continued)

00098-82-8	Isopropylbenzene
00527-84-4	2-Isopropyltoluene
00535-77-3	3-Isopropyltoluene
00099-87-6	4-Isopropyltoluene
	Isothiazolones, total
	Linear alkylbenzene sulfonates
00149-30-4	Mercaptobenzothiazole
00079-41-4	Methacrylic acid
04013-34-7	[1-Methoxyethyl]benzene
03558-60-9	[2-Methoxyethyl]benzene
	Methylbenz(a)anthracenes
06217-18-6	Methylene bisthiocyanate
00101-14-4	4,4'-Methylene-bis-(2-chloroaniline)
00101-61-1	4,4'-Methylene-bis-(N,N'-dimethyl)aniline
01807-55-2	4,4'-Methylene-bis-(N-methyl)aniline
00126-39-6	2-Methylethyl-1,3-dioxolane
00611-15-4	2-Methylstyrene
00100-80-1	3-Methylstyrene
00622-97-9	4-Methylstyrene
00098-83-9	α-Methylstyrene
00100-61-8	N-Methylaniline
00098-92-0	Niacinamide
04726-14-1	Nitralin
00139-13-9	Nitrilotriacetic acid
00088-72-2	2-Nitrotoluene
00099-08-1	3-Nitrotoluene
00099-99-0	4-Nitrotoluene
04685-14-7	Paraquat
40487-42-1	Pendimethalin
00101-84-8	Phenyl ether
00637-50-3	3-Phenyl-1-propene
00766-90-5	cis-1-Phenyl-1-propene
00873-66-5	trans-1-Phenyl-1-propene
00095-54-5	1,2-Phenylenediamine
00108-45-2	1,3-Phenylenediamine
00100-63-0	Phenylhydrazine
14838-15-4	Phenylpropanolamine
01918-02-1	Picloram
59536-65-1	Polybrominated biphenyls (PBBs)
00709-98-8	Propanil
00103-65-1	n-Propylbenzene
	Quaternary ammonium compounds
07440-24-6	Strontium 90
34014-18-1	Tebuthiuron
00634-66-2	1,2,3,4-Tetrachlorobenzenes [1]
00634-90-2	1,2,3,5-Tetrachlorobenzenes
02136-79-0	Tetrachloroterephthalic acid
05216-25-1	α,α,α,4-Tetrachlorotoluene
00109-99-9	Tetrahydrofuran
00058-55-9	Theophylline
00137-26-8	Thiram
00095-80-7	Toluene-2,4-diamine
00095-70-5	Toluene-2,5-diamine
00823-40-5	Toluene-2,6-diamine
29385-43-1	Tolyltriazole
00615-54-3	1,2,4-Tribromobenzene
00056-35-9	Tributyltin oxide
00634-93-5	2,4,6-Trichloroaniline
00087-61-6	1,2,3-Trichlorobenzenes
00108-70-3	1,3,5-Trichlorobenzenes
00075-69-4	Trichlorofluoromethane
00093-72-1	2,4,5-Trichlorophenoxypropionic acid (Silvex) [1]
00598-77-6	1,1,2-Trichloropropane
13116-57-9	cis-1,2,3-Trichloropropene
13116-58-0	trans-1,2,3-Trichloropropene
07359-72-0	2,3,4-Trichlorotoluene
56961-86-5	2,3,5-Trichlorotoluene
02077-46-5	2,3,6-Trichlorotoluene
06639-30-1	2,4,5-Trichlorotoluene
23749-65-7	2,4,6-Trichlorotoluene
00098-07-7	α,α,α-Trichlorotoluene
00088-66-4	α,α,2-Trichlorotoluene
00094-99-5	α,2,4-Trichlorotoluene
13940-94-8	α,α,4-Trichlorotoluene
02014-83-7	α-2,6-Trichlorotoluene
00102-47-6	α-3,4-Trichlorotoluene
26523-64-8	Trichlorotrifluoroethanes
00354-58-5	1,1,1-Trichloro-2,2,2-trifluoroethane
00076-13-1	1,1,2-Trichloro-1,2,2-trifluoroethane
00108-67-8	Trimethylbenzenes
00526-73-8	1,2,3-Trimethylbenzenes
00095-63-6	1,2,4-Trimethylbenzenes
00108-67-8	1,3,5-Trimethylbenzenes
25551-13-7	Trimethylbenzenes (mixed isomers)
01463-84-6	2,3,6-Trimethylpyridines
00108-75-8	2,4,6-Trimethylpyridines
00602-29-9	2,3,4-Trinitrotoluene
18292-97-2	2,3,6-Trinitrotoluene
00610-25-3	2,4,5-Trinitrotoluene
00118-96-7	2,4,6-Trinitrotoluene
00603-15-6	3,4,5-Trinitrotoluene
00115-86-6	Triphenyl phosphate
10028-17-8	Tritium
	Uranyl Ion

For discharges to groundwater, also include any substances to which the Principal Organic Contaminant (POC) groundwater standard applies. The POC groundwater standard includes the following classes of compounds: (1) Halogenated alkanes (includes those compounds identified by *Freon, Genatron, Halon, CFC-* and *HCFC-* prefixes in their product names); (2) Halogenated ethers; (3) Halobenzenes and substituted halobenzenes; (4) Benzene and alkyl- or nitrogen-substituted benzenes; (5) Substituted unsaturated hydrocarbons (i.e. straight or branched chain unsaturated hydrocarbon containing one of the following: halogen, aldehyde, nitrile, amide); (6) Halogenated non-aromatic cyclic hydrocarbons. See 6NYCRR Section 700.1 for additional information.

Notes: 1. These pollutants either have FDA fish flesh concentration limits, are identified as Bioaccumulative Chemicals of Concern (BCCs), or are restricted pesticides.

TABLE 10

Other Pollutants and Hazardous Substances Required to be Identified in ICS by Applicants if Present at Facility in Significant Levels

Abamectin [Avermectin B1]
Acephate
Acetic Acid
Acetic anhydride
Acetone cyanohydrin
Acetyl bromide
Acetyl chloride
Acid Compounds
Acifluorfen, sodium salt
Adipic acid
Alkalinity, Carbonate, as CaCO3
d-trans-Allethrin
Allyl alcohol
Allylamine
Aluminum oxide (fibrous form)
Aluminum phosphide
Aluminum sulfate
1-Amino-2-methylanthraquinone
2-Aminoanthraquinone
4-Aminoazobenzene
Amitraz
Amitrole
Ammonium acetate
Ammonium benzoate
Ammonium bicarbonate
Ammonium bichromate
Ammonium bifluoride
Ammonium bisulfite
Ammonium carbamate
Ammonium carbonate
Ammonium chloride
Ammonium chromate
Ammonium citrate
Ammonium fluoride
Ammonium fluoroborate
Ammonium hydroxide
Ammonium nitrate (solution)
Ammonium oxalate
Ammonium silicofluoride
Ammonium sulfamate
Ammonium sulfate (solution)
Ammonium sulfide
Ammonium sulfite
Ammonium tartrate
Ammonium thiocyanate
Ammonium thiosulfate
Amyl acetate
Anilazine
ortho-Anisidine hydrochloride
ortho-Anisidine
para-Anisidine
Antimony pentachloride
Antimony potassium tartrate
Antimony tribromide
Antimony trichloride
Antimony trifluoride
Antimony trioxide
Arsenic disulfide
Arsenic pentoxide
Arsenic trichloride
Arsenic trioxide
Arsenic trisulfide
Avitrol [1]
Azodrin
1-(3-Chloroallyl)-3,5,7-triaza-1-Azoniaadamantane chloride
Bandane
Barium cyanide
Bendiocarb
Bentazon
Benzaldehyde
Benzamide
Benzeneacetic acid
1,2-Benzenedicarboxaldehyde
Benzenepropanoic acid
Benzo(e)pyrene
Benzo(j)fluoranthene
Benzo(rst)pentaphene
Benzoic acid
Benzoic acid
Benzoic acid, ammonium salt
Benzonitrile
2-(Thiocyanomethyltrio)Benzothiazole
Benzoyl chloride
Benzoyl peroxide
Beryllium chloride
Beryllium fluoride
Beryllium nitrate
Bidrin
Bifenthrin
Bis(2-chloro-1-methylethyl)ether
1,3-Bis(methylisocyanate)cyclohexane
1,4-Bis(methylisocyanate)cyclohexane
Bis(pentabromophenyl)ether
Bismuth, Total
Bomyl
Boron trichloride
Boron trifluoride
Brodifacoum (Talon) [1]
Bromacil, lithium salt
Bromadialone (Maki) [1]
Bromethalin
Bromine
1-Bromo-1-(bromomethyl)-1,3-propane dicarbonitrile
Bromophos
Bromoxynil
Bromoxynil octanoate
Bronopol
Brucine
1,3-Butadiene
1-Butanol
Butyl acrylate
sec-Butyl alcohol
Butylacetate
Butylamine
N-Butylbenzene sulfonamide
4,4-Butyldenebis-(6-T-butyl-M-cresol)
1,2-Butylene oxide
N-Butylphthalate
Butyraldehyde
Butyric acid
4-(4-Chloro-2-methylphenoxy) Butyric
C.I. Acid Green 3
C.I. Acid Red 114
C.I. Basic Green 4
C.I. Basic Red 1
C.I. Direct Black 38
C.I. Direct Blue 218
C.I. Direct Blue 6
C.I. Direct Brown 95
C.I. Disperse Yellow 3
C.I. Food Red 15
C.I. Food Red 5
C.I. Solvent Orange 7
C.I. Solvent Yellow 14
C.I. Solvent Yellow 3
C.I. Solvent Yellow 34 (Auramine)
C.I. Vat Yellow 4
Cacodylic acid
Cadmium acetate
Cadmium bromide
Cadmium chloride
Calcium arsenate
Calcium arsenite
Calcium carbide
Calcium chromate
Calcium cyanamide
Calcium cyanide
Calcium dodecylbenzenesulfonate
Calcium hypochlorite
Caprolactam
Captafol
Carbamates
Carbazole
Carbonyl sulfide
Catechol
Chinomethionat
Chloral
Chlorendic Acid [1]
Chlorfenvinphos (Birlane)
Chlorimuron ethyl
Chlorine
Chlorine dioxide
3-Chloro-2-methyl-1-propene
4-Chloro-3,5-dimethylphenol
Chloroacetic acid
2-Chloroacetophenone
4-Chlorobenzoic acid [1]
Chlorophacinone (Rozol)
para-Chlorophenyl isocyanate
Chloropicrin
3-Chloropropionitrile
Chlorosulfonic acid
Chlorotetrafluoroethane
Chlorothymol
Chlorsulfuron
Cholecalciferol (Quintox) [1]
Chromic acetate
Chromic acid
Chromic sulfate
Chromous chloride
Cimectacarb
Clopyralid
Cobaltous bromide
Cobaltous formate
Cobaltous sulfamate
Creosote
para-Cresidine
Crotonaldehyde
Cupferron
Cupric acetate
Cupric acetoarsenite
Cupric chloride
Cupric nitrate
Cupric oxalate
Cupric sulfate
Cupric sulfate ammoniated
Cupric tartrate
Cyanogen chloride
Cycloate
Cyclohexamide (Actidone) [1]
Cyclohexane
1,4-Cyclohexane diisocyanate
Cyclohexanol
Cyclohexanone
Cyclohexanone oxime
Cyclohexene
Cyclohexylamine
Cyclopentanone
Cyclotrimethylenetrinitramine
Cyfluthrin
Cyhalothrin
2,4-DP
Daminozide (Alar) [1]
Dasanit
Dazomet
Dazomet, sodium salt
Decanal
2,4-Diaminoanisole sulfate
2,4-Diaminoanisole
4,4'-Diaminodiphenyl ether
Diaminotoluene (mixed isomers)
Dibenz(a,h)acridine
Dibenz(a,j)acridine
Dibenzo(a,e)fluoranthene
Dibenzo(a,e)pyrene
Dibenzo(a,h)pyrene
Dibenzo(a,l)pyrene
Dibenzo(c,g)carbazole, 7H-
Dibutyltin chloride
Dibutyltin dilaurate
Dichlobenil
Dichlone
2,3-Dichloro-1,4-napthoquinone (Dichlone)
1,4-Dichloro-2-butene
3,3'-Dichlorobenzidine dihydrochloride
3,3'-Dichlorobenzidine sulfate
1,4-Dichlorobutane
Dichlorophene
2,3-Dichlorophenol
2,4-Dichlorophenoxyacetic acid (2,4-D),
2,4-Dichlorophenoxyacetic acid (2,4-D), propy
2,4-Dichlorophenoxyacetic acid (2,4-D), 2-eth
2,4-Dichlorophenoxyacetic acid (2,4-D), butox
2,4-Dichlorophenoxyacetic acid (2,4-D), butyl
2,4-Dichlorophenoxyacetic acid (2,4-D), chlor
2,4-Dichlorophenoxyacetic acid (2,4-D), isopr
2,4-Dichlorophenoxyacetic acid (2,4-D), sodiu
2,4-Dichlorophenoxyacetic acid (2,4-D), isobu
2,3-Dichloropropene
2,2-Dichloropropionic acid
Dichlorotetrafluoroethane (CFC-114)
α,α-Dichlorotoluene
Diclofop methyl
Dicyclohexylamine
Dicyclopentadiene
Diepoxybutane
Diethanolamine
Diethatyl ethyl
Diethyl formamide
Diethyl maleate
Diethyl mercury
Diethyl sulfate
Diethylamine
Diethylaminoethanol
Diethyldiisocyanatobenzene
Diethylene glycol
Diethylene glycol monoethyl ether
Diethylhexylphthalate isomer
Diethyltin dycaprylate
Diflubenzuron
Diglycidyl resorcinol ether
2,3-Dihydro-1,6-dimethyl-1H-indene
2,3-Dihydro-1-methyl-1H-indene
Dihydrosafrole
4,4'-Diisocyanatodiphenyl ether
2,4'-Diisocyanatodiphenyl sulfide
Diisopropyl ether
Diisopropylamine
Dimethipin
3,3'-Dimethoxybenzidine dihydrochloride,
3,3'-Dimethoxybenzidine hydrochloride,
3,3'-Dimethoxybenzidine,
3,3'-Dimethoxybenzidine-4,4'-diisocyanate
Dimethyl chlorothiophosphate
trans-1,4-Dimethyl cyclohexane
Dimethyl sulfate
2,2-Dimethyl-2,3-Dihydro-7-Benzofuranol
3,3'- Dimethyl-4,4'-diphenylene diisocyanate
Dimethylamine
Dimethylamine dicamba
3,3'- Dimethylbenzidine dihydrochloride (o-To
3,3'-Dimethylbenzidine dihydrofluoride
Dimethylcarbamyl chloride
Dimethyldichlorosilane
Dimethyldioxane
3,3'-Dimethyldiphenylmethane-4,4'-diisocyanate
Dimethyldithiocarbamate
2,5-Dimethylfuran
1,1-Dimethylhydrazine
1,2-Dimethylhydrazine
2,6-Dimethylphenol
Dimethylphenylcarbinol
Dimethylterephthalate
ortho-Dinitrobenzene
para-Dinitrobenzene
Dinitrophenol
Dinocap [1]
Diphacinone
Dipotassium endothall
Dipropyl isocinchomeronate
Diquat
Disodium cyanodithioimidocarbonate
Di-Syston
2,4-Dithiobiuret
Dithiocarbamate
Dodecanoic acid

2,4-Dichlorophenoxyacetic acid (2,4-D), 2-ethylhexyl ester

TABLE 10 (Ctd.)

Other Pollutants and Hazardous Substances Required to be Identified in ICS by Applicants If Present at Facility in Significant Levels

Dodecene-4
Dodecylbenzesulfonic acid
Dyphonate
EDTA
EDTA, Ammoniated
EPN
Epichlorohydrin
Ethoprop
2-Ethoxyethanol
2-Ethoxyethanol acetate
Ethyl acetate
Ethyl acrylate
Ethyl chloroformate
Ethyl di-n-propylthiocarbamate (EPTC)
Ethyl ether
Ethyl mercuric chloride
Ethylene
Ethylene cyanohydrin
Ethylene dichloride
Ethylene glycol dinitrate
Ethylenediamine
Ethyleneimine (Aziridine)
Fenamiphos
Fenarimol
Fenbutatin oxide
Fenoxaprop ethyl
Fenoxycarb
Fenpropathrin
Fenvalerate
Ferric ammonium citrate
Ferric ammonium oxalate
Ferric chloride
Ferric fluoride
Ferric nitrate
Ferric sulfate
Ferricyanide
Ferrocyanide
Ferrous ammonium sulfate
Ferrous sulfate
Ferrous chloride
Fluazifop butyl
Fluoride, Complex
Fluoride, Free
Fluorine
Fluoroborates
Fluorouracil
Fluvalinate
Fomesafen
Formetanate hydrochloride (Carazol SP)[1]
Formic acid
Fumaric acid
Fumarin
Furan
Furazolidone
Furfural
Furium
Glycidaldehyde
Guthion
n-Heptane
1-Heptanol
2-Heptanol
3-Heptanol
4-Heptanol
Hexachloronaphthalene
Hexamethyl benzene
Hexamethylene diamine
Hexamethylene-1,6-diisocyanate
Hexamethylphosphoramide
Hexanate
n-Hexane
3-Hexanone
Hydramethylnon
Hydrazine sulfate
Hydrochloric acid
Hydrofluoric acid
Hydrogen cyanide
Hydrogen fluoride
Hydrogen peroxide
α-Hydroxy-α-methylbenzeneacetic acid
3-Hydroxycarbofuran
1-Hydroxyethylidene
Hydroxyquinoline, total
Imazalil
Iodide (as I)
3-Iodo-2-propynyl butylcarbamate
Iron pentacarbonyl
1,3-Isobenzofurandione
1,(3H)-Isobenzofuranone
Isobutyraldehyde
Isofenphos
Isophorone diisocyanate
Isoprene
Isopropanolamine dodecylbenzenesulfonate
Isopropyl alcohol
Isopropylamine
Isopropylbenzene hydroperoxide
4,4'-Isopropylidenediphenol
Karbutilate
Kelthane
Lactofen
Lanthanum, Total
Lead acetate
Lead arsenate
Lead chloride
Lead flourite
Lead fluoborate
Lead iodide
Lead nitrate
Lead stearate
Lead sulfate
Lead sulfide
Lead thiocyanate
Lethane 384
Lithium carbonate
Lithium chromate
Lithium, Total
2,5-Lutidine
Magnesium phosphide
Maleic anhydride
Maleic hydrazide
Malononitrile
Mercaptodimethur
Mercuric cyanide
Mercuric nitrate
Mercuric sulfate
Mercuric thiocyanate
Mercurous nitrate
Merphos
Methacrylamide
Methacrylate
Methanol
Methazole
Methoprene
Methoxone sodium salt
2-Methoxy-5-nitroaniline
2-Methoxyethanol acetate
2-Methoxyethanol
Methoxypropylamine
Methyl acetate
2-Methyl benzene sulfonamide
Methyl chlorocarbonate
Methyl isobutyl ketone
Methyl isocyanate
Methyl isothiocyanate
Methyl mercaptan
Methyl mercury
Methyl tert-butyl ether
2-Methyl-2-propanol
1-Methyl-4-(1-methyethenyl)cyclohexene
Methylamine
2-Methylanthracene
9-Methylanthracene
2-Methylbenzaldehyde
3-Methylbenzaldehyde
4-Methylbenzaldehyde
4-Methylbenzene sulfonamide
4-Methylbenzenemethanol
2-Methylbenzoic acid
3-Methylbenzoic acid
5-Methylchrysene
Methylcyclopentane
4-Methyldiphenylmethane-3,4-diisocyanate
1,1-Methylene bis(4-isocyanatocyclohexane)
Methylenebis(phenylisocyanate) (MDI)
4,4'-Methylenedianiline
1-Methylnaphthalene
Methylolmethacrylamide
Methylphthalate
Methyltrichlorosilane
Metiram
Metolachlor
Michler's ketone
Molinate
Molybdenum trioxide
Monitor
Monochlorobenzyl trifluoride
Monoethylamine
Monomethylamine
Mustard gas (1,1'-thiobis[2-chloro-]Ethane)
Myclobutanil
N-Methyl-2-pyrrolidone
N-Methylolacrylamide
N-Nitroso-N-methyl urea
N-Nitrosodi-N-butylamine
N-Nitrosodiethylamine
N-Nitrosomethylvinylamine
N-Nitrosonornicotine
1,5-Naphthalene diisocyanate
Naphthenic acid
α-Naphthyl thiourea
Nickel ammonium sulfate
Nickel chloride
Nickel hydroxide
Nickel nitrate
Nickel sulfate
Nicotine alkaloid
Nitrapyrin
Nitric acid
4-Nitrobiphenyl
Nitrocyclohexane
Nitrofen
Nitrofurans
Nitrofurantoin
Nitrofurazone
Nitrogen dioxide
Nitrogen mustard
Nitroglycerin
2-Nitropropane
1-Nitropyrene
para-Nitrosodiphenylamine
Nonanal
1-Nonanol
Norflurazon
Octachlorocyclopentene
Octachloronaphthalene
Octachlorostyrene
Octamethylpyrophosphoramine
Oryzalin
Osmium tetroxide
Oxalic acid, benzyl ester
Oxydemeton methyl
Oxydiazon
Oxyfluorfen
Ozone
Paraformeldehyde
Paraldehyde
Paraquat dichloride
Pebulate
Pentac
Pentanate
Pentobarbital sodium
Peracetic acid
Perchloromethyl mercaptan
Permethrin
Phenothrin
1,3-Phenylene diisocyanate
1,4-Phenylene diisocyanate
1,2-Phenylenediamine dihydrochloride
1,4-Phenylenediamine dihydrochloride
Phenylmercuric acetate
2-Phenylphenol
4-Phenylphenol
Phenytoin
Phosdrin
Phosgene
Phosphamidon
Phosphate, Ortho
Phosphate, as PO4
Phosphine
Phosphoric acid
Phosphorus oxychloride
Phosphorus pentasulfide
Phosphorus trichloride
Photomirex
Phthalate Esters
Picric acid
Piperonyl butoxide
Pirimiphos methyl
Pival
Polybutene(1-propene, 2-methyl homopolymer)
Polymeric diphenylmethane diisocyanate
Polymethacrylic Acid
Potassium N-methyldithiocarbamate
Potassium arsenate
Potassium arsenite
Potassium bichromate
Potassium bromate
Potassium chromate
Potassium cyanide
Potassium hydroxide
Potassium permanganate
Prodiamine
Profenofos
Propane sultone
1-Propanol
Propargite
Propargyl alcohol
1-Propene
Propetamphos
Propiconazole
β-Propiolactone
Propionaldehyde
Propionic acid
Propionic anhydride
Propylene glycol
Propylene glycol monoethyl ether
Propylene glycol monomethyl ether
Propylene oxide
Propyleneimine
Pyrethrins
Quinoline
Quinone
1,4-Quinone dioxide
Quizalofop ethyl
Randox
Reserpine
Resmethrin
Resorcinol
Rhodamine WT
Rotenone
Saccharin (manufacturing)
Schradan
Selenium oxide
Sethoxydim
Sevin
Silver nitrate
Sodium
Sodium Molybdate
Sodium Nitrite
Sodium Sulfate
Sodium adipate, disodium salt
Sodium arsenate
Sodium arsenite
Sodium azide
Sodium bichromate
Sodium bifluoride
Sodium bisulfite
Sodium chromate
Sodium cyanide
Sodium dicamba
Sodium diethyldithiocarbamate
Sodium dodecylbenzenesulfonate
Sodium fluoride
Sodium fluoroacetate
Sodium hydrosulfide
Sodium hydroxide
Sodium hypochlorite

TABLE 10 (Ctd.)

Other Pollutants and Hazardous Substances Required to be Identified in ICS by Applicants if Present at Facility in Significant Levels

Sodium methylate
Sodium nitrite
Sodium o-phenylphenoxide
Sodium pentachlorophenate
Sodium phosphate (tribasic)
Sodium selenite
Sodum phosphate (dibasic)
Strontium qhromate
Strychnine
Styrene oxide
Sulfotepp
Sulfur moriochloride
Sulfuric acid
Sulfuryl flupride (Vikane) [1]
Supracide [1]
Tellurium, Total
Temephos
Tetrachlorodiphenyl ethane (TDE)
Tetracycline hydrochloride [1]
Tetraethyl leadTetraethyl pyrophosphate [1]
Tetraethyl tin
Tetramethrin
1,2,4,5-Tetramethylbenzene
Thallium sulfate
2-(4-Thiazolyl)-1H-benzimidazole
Thioacetamide
Thiobencarb
Thiocyanate
4,4'-Thiodianiline
Thiodicarb
Thiofanox
Thiophanate ethyl
Thiophanate methyl
Thiosemicarbazide
Thiourea
Thorium dioxide
Titanium tetrachloride
Toluene diisocyanate
Toluene-2,6-diisocyanate
ortho-Toluidine hydrochloride
Tri-N-butyl phosphate
Triallate
Tribenuron methyl [1]
Tributyltin
Tributyltin fluoride
Tributyltin methacrylate
S,S,S-Tributyltrithiophosphate (DEF)
Trichlorfon
Trichloroacetyl chloride
Trichlorofon
2,4,5-Trichlorophenoxy acetic acid, (2,4,5-TP), esters
2,4,5-Trichlorophenoxy acetic acid salts
Trichlorophenoxy propanoic acid
α,α,α-Trichlorotoluene
Triclopyr triethylammonium salt
Triethanolamine dodecylbenzenesulfonate
Triethylamine
Triforine
Trimethyl phosphate
Trimethylamine
1,3,5-Trimethylbenzene
Trimethylchlorosilane
3,3,5-Trimethylcyclohexanone
2,2,4-Trimethylhexamethylene diisocyanate
2,4,4-Trimethylhexamethylene diisocyanate
2,3,5-Trimethylphenyl methylcarbamate
Triphenyltin chloride
Tris(2,3-dibromopropyl) phosphate
Trypan blue
Uranyl acetate
Uranyl nitiate
Urethane (Ethyl carbamate)
Valone (PMP) [1]
Vanadium pentoxide
Vernolate
Vinclozolin
Vinylidene chloride
Vinyl bromide
Vinyl fluoride
Vanadyl sulfate [1]
Warfarin
Zinc acetate
Zinc ammonium chloride
Zinc borate
Zinc bromide
Zinc carbonate
Zinc chloride
Zinc fluoride
Zinc formate
Zinc hydrosulfite
Zinc nitrate
Zinc phenolsulfonate [1]
Zinc phosphide
Zinc silicofluoride
Zinc sulfate
Zirconium nitrate
Zirconium potassium flouride
Zirconium sulfate
Zirconium tetrachloride
Zinc cyanide [1]
Zinophos

Notes: 1. These pollutants either have FDA fish flesh concentration limits, are identified as Bioaccumulative Chemicals of Concern (BCCs), or are restricted pesticides.

APPLICATION FOR SPDES PERMIT EQUIVALENT REQUIREMENTS

1. Conventional Monitoring Information - Table 1

The following monitoring information must be included.

Parameter	Raw Wastewater or Monitoring Well				Projected or Actual Treated Wastewater (if available)		
	Units	Min	Max	Avg	Min	Max	Avg
Flow							
pH							
BOD5							
TSS							
TDS							
TKN							
Ammonia							

2. Sampling Information - Priority Pollutants, Toxic Pollutants, and Hazardous Substances

i. Do you know or have reason to believe that any of the pollutants listed in Tables 6, 7, or 8 of the instructions are present in the discharge from this outfall?

- ☐ **Yes** - If yes, monitoring data must be included in table 2 (next pg)
- ☐ **No** - Go to Item **ii.** below.

ii. Do you know or have reason to believe that any of the pollutants listed in Table 9 or Table 10 of the instructions, or any other toxic, harmful, or injurious chemical substances not listed in Tables 6-10, are present in the discharge from this outfall?

- ☐ **Yes** - Source or reason for presence in discharge attached
- ☐ **Yes** - Quantitative or qualitative data attached
- ☐ **No**

2. Monitoring Information for Priority Pollutants, Toxic Pollutants, and Hazardous Substances - Table 2

CAS #	Parameter	Raw Wastewater or Monitoring Well				Projected or Actual Treated Wastewater (if available)		
		Units	Min	Max	Avg	Min	Max	Avg

APPENDIX F – TREATMENT SYSTEM SCHEMATIC

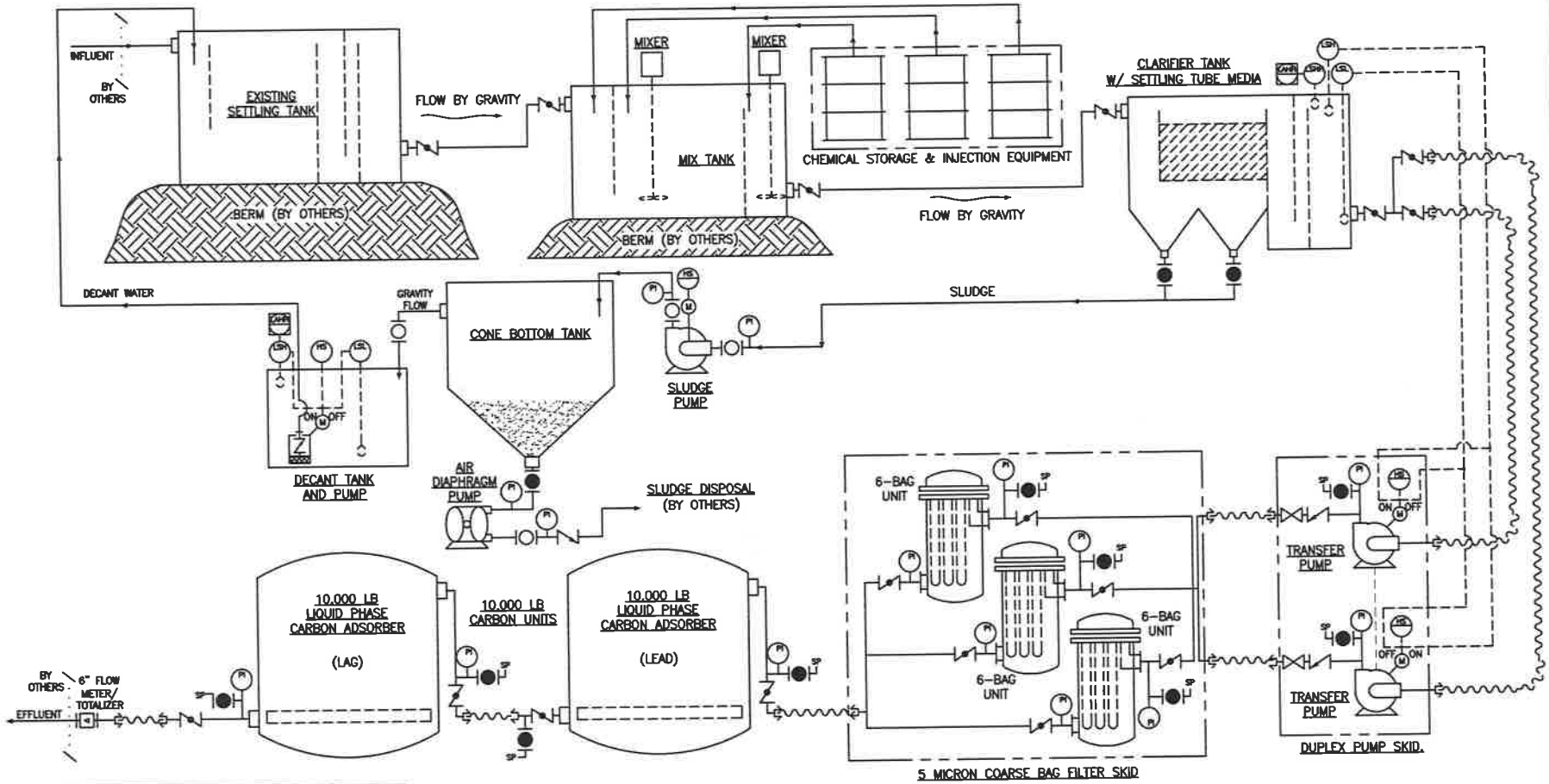

LEGEND

- PROCESS PIPING
- FLEXIBLE HOSE
- FLOW DIRECTION
- PIPE CROSS OVER
- LEVEL FLOAT
- MOTOR
- FLOW METER
- BALL VALVE (NORMALLY CLOSE)
- BUTTERFLY VALVE
- CHECK VALVE
- GATE VALVE (OPEN)
- SP SAMPLE PORT
- CAM LOCK COUPLING
- PRESSURE GAGE
- LEVEL ALARM HIGH HIGH
- LEVEL SWITCH HIGH
- LEVEL SWITCH HIGH HIGH
- LEVEL SWITCH LOW
- HAND OPERATED SWITCH

THIS DRAWING IS THE PROPERTY OF GROUND/WATER TREATMENT & TECHNOLOGY, INC.

NOTES:
1) MAXIMUM FLOWRATE = 600 GPM
2) SYSTEM FOOTPRINT APPROX. 10' X 100' + 20' X 50'
3) NOT ALL VALVES, INSTRUMENTATION AND PIPING, ETC. SHOWN FOR CLARITY.
4) GENERATOR BY GWTT. – 460V, 3 PHASE, 100 AMPS.

NO.	REVISIONS	DATE
B	PRELIMINARY DESIGN FOR REVIEW	07/02/09

MTA BORDEN AVE
BROOKLYN, NY

600 GPM PROPOSED TEMPORARY WATER TREATMENT SYSTEM

SCALE: NTS	APPROVED BY: JB	DRAWN BY: AAV	
DATE: 06/30/09			

GROUND/WATER TREATMENT & TECHNOLOGY
P.O. BOX 1174
DENVILLE, NJ 07834

DWG SIZE: A	SHEET: 1 OF 1	DRAWING NUMBER: 14-1607-PD	B

T:\Cad Files\Projects\14-JB\14-1607\14-1607-PD Rev-B MTA Borden Ave.dwg

APPENDIX G – CEMENT KILN DUST MSDS

Material Safety Data Sheet

Section 1: PRODUCT AND COMPANY INFORMATION

Product Name(s): Cement Kiln Dust

Product Identifiers: Cement Kiln Dust (CKD), Kiln Dust, Cement Lime, New Lime™.

Manufacturer:
Lafarge North America Inc.
12950 Worldgate Drive, Suite 500
Herndon, VA 20170

Information Telephone Number:
703-480-3600 (9am to 5pm EST)

Emergency Telephone Number:
1-800-451-8346 (3E Hotline)

Product Use: Kiln dust used in the manufacture of bricks, mortar, cement, concrete, plasters, paving materials, and other construction applications.

Note: This MSDS covers many types of kiln dust. Individual composition of hazardous constituents will vary between types of kiln dust.

Section 2: COMPOSITION/INFORMATION ON INGREDIENTS

Component	Percent (By Weight)	CAS Number	OSHA PEL -TWA (mg/m^3)	ACGIH TLV-TWA (mg/m^3)	LD_{50} (mouse, intraperitoneal)	LC_{50}
Portland Cement Kiln Dust	100	68475-76-3	NA	NA	NA	NA
Calcium Carbonate*	10-80	1317-65-3	15 (T); 5 (R)	10 (T)	NA	NA
Calcium Oxide	5-50	1305-78-8	5 (T)	2 (T)	3059 mg/kg	NA
Crystalline Silica	0-10	14808-60-7	[(10) / (%SiO_2+2)] (R); [(30) / (%SiO_2+2)] (T)	0.05 (R)	NA	NA
Magnesium Oxide	0-2	1309-48-4	15 (T)	10 (T)	NA	NA

Note: Exposure limits for components noted with an * contain no asbestos and <1% crystalline silica

Cement is made from materials mined from the earth and is processed using energy provided by fuels. Trace amounts of chemicals may be detected during chemical analysis of cement and cement kiln dust. For example, cement kiln dust may contain trace amounts of potassium and sodium sulfate compounds, chromium compounds, nickel compounds, and other trace compounds.

Section 3: HAZARD IDENTIFICATION

WARNING

Corrosive - Causes severe burns.
Toxic - Harmful by inhalation.
(Contains crystalline silica)

Use proper engineering controls, work practices, and personal protective equipment to prevent exposure to wet or dry product.

Read MSDS for details.

Respiratory Protection

Eye Protection

Waterproof Gloves

Waterproof Boots

Section 3: HAZARD IDENTIFICATION (continued)

Emergency Overview: Kiln dust is a solid, grey or tan, odorless powder. It is not combustible or explosive. A single, short-term exposure to the dry powder presents little or no hazard. Exposure of sufficient duration to wet kiln dust, or to dry kiln dust on moist areas of the body, can cause serious, potentially irreversible tissue (skin, eye, respiratory tract) damage due to chemical (caustic) burns, including third degree burns.

Potential Health Effects:

Eye Contact: Airborne dust may cause immediate or delayed irritation or inflammation. Eye contact with large amounts of dry powder or with wet kiln dust can cause moderate eye irritation, chemical burns and blindness. Eye exposures require immediate first aid and medical attention to prevent significant damage to the eye.

Skin Contact: Kiln dust may cause dry skin, discomfort, irritation, severe burns, and dermatitis.

Burns: Exposure of sufficient duration to wet kiln dust, or to dry kiln dust on moist areas of the body, can cause serious, potentially irreversible damage to skin, eye, respiratory and digestive tracts due to chemical (caustic) burns, including third degree burns. A skin exposure may be hazardous even if there is no pain or discomfort.

Kiln dust may be shipped or stored hot and can cause thermal burns to unprotected skin.

Dermatitis: Kiln dust is capable of causing dermatitis by irritation and allergy. Skin affected by dermatitis may include symptoms such as, redness, itching, rash, scaling, and cracking.

Irritant dermatitis is caused by the physical properties of kiln dust including alkalinity and abrasion.

Allergic contact dermatitis is caused by sensitization to hexavalent chromium (chromate) present in kiln dust. The reaction can range from a mild rash to severe skin ulcers. Persons already sensitized may react to the first contact with kiln dust. Others may develop allergic dermatitis after years of repeated contact with kiln dust.

Inhalation (acute): Breathing dust may cause nose, throat or lung irritation, including choking, depending on the degree of exposure. Inhalation of high levels of dust can cause chemical burns to the nose, throat and lungs.

Inhalation (chronic): Risk of injury depends on duration and level of exposure.

Silicosis: This product contains crystalline silica. Prolonged or repeated inhalation of respirable crystalline silica from this product can cause silicosis, a seriously disabling and fatal lung disease. See Note to Physicians in Section 4 for further information.

Carcinogenicity: Kiln dust is not listed as a carcinogen by IARC or NTP; however, kiln dust contains trace amounts of crystalline silica and hexavalent chromium which are classified by IARC and NTP as known human carcinogens.

Autoimmune Disease: Some studies show that exposure to respirable crystalline silica (without silicosis) or that the disease silicosis may be associated with the increased incidence of several autoimmune disorders such as scleroderma (thickening of the skin), systemic lupus erythematosus, rheumatoid arthritis and diseases affecting the kidneys.

Section 3: HAZARD IDENTIFICATION (continued)

Tuberculosis: Silicosis increases the risk of tuberculosis.

Renal Disease: Some studies show an increased incidence of chronic kidney disease and end-stage renal disease in workers exposed to respirable crystalline silica.

Ingestion: Do not ingest kiln dust. Although ingestion of small quantities of kiln dust is not known to be harmful, large quantities can cause chemical burns in the mouth, throat, stomach, and digestive tract.

Medical Conditions Aggravated by Exposure: Individuals with lung disease (e.g. bronchitis, emphysema, COPD, pulmonary disease) or sensitivity to hexavalent chromium can be aggravated by exposure.

Section 4: FIRST AID MEASURES

Eye Contact: Rinse eyes thoroughly with water for at least 15 minutes, including under lids, to remove all particles. Seek medical attention for abrasions and burns.

Skin Contact: Wash with cool water and a pH neutral soap or a mild skin detergent. Seek medical attention for rash, burns, irritation, dermatitis, and prolonged unprotected exposures to wet cement or kiln dust, cement mixtures or liquids from wet cement.

Inhalation: Move person to fresh air. Seek medical attention for discomfort or if coughing or other symptoms do not subside.

Ingestion: Do not induce vomiting. If conscious, have person drink plenty of water. Seek medical attention or contact poison control center immediately.

Note to Physician: The three types of silicosis include:

- Simple chronic silicosis – which results from long-term exposure (more than 20 years) to low amounts of respirable crystalline silica. Nodules of chronic inflammation and scarring provoked by the respirable crystalline silica form in the lungs and chest lymph nodes. This disease may feature breathlessness and may resemble chronic obstructive pulmonary disease (COPD).
- Accelerated silicosis – occurs after exposure to larger amounts of respirable crystalline silica over a shorter period of time (5-15 years). Inflammation, scarring, and symptoms progress faster in accelerated silicosis than in simple silicosis.
- Acute silicosis – results from short-term exposure to very large amounts of respirable crystalline silica. The lungs become very inflamed and may fill with fluid, causing severe shortness of breath and low blood oxygen levels.

Progressive massive fibrosis may occur in simple or accelerated silicosis, but is more common in the accelerated form. Progressive massive fibrosis results from severe scarring and leads to the destruction of normal lung structures.

Section 5: FIREFIGHTING MEASURES

Flashpoint & Method: Non-combustible

General Hazard: Avoid breathing dust. Wet kiln dust and cement is caustic.

Extinguishing Media: Use extinguishing media appropriate for surrounding fire.

Firefighting Equipment: Kiln dust poses no fire-related hazard. A SCBA is recommended to limit exposures to combustion products when fighting any fire.

Combustion Products: None.

Section 6: ACCIDENTAL RELEASE MEASURES

General: Place spilled material into a container. Avoid actions that cause the kiln dust to become airborne. Avoid inhalation of kiln dust and contact with skin. Wear appropriate protective equipment as described in Section 8. Scrape wet kiln dust or cement and place in container. Allow material to dry or solidify before disposal. Do not wash kiln dust down sewage and drainage systems or into bodies of water (e.g. streams).

Waste Disposal Method: Dispose of kiln dust according to Federal, State, Provincial and Local regulations.

Section 7: HANDLING AND STORAGE

General: Keep bulk and bagged kiln dust dry until used. Stack bagged material in a secure manner to prevent falling. Bagged kiln dust and cement is heavy and poses risks such as sprains and strains to the back, arms, shoulders and legs during lifting and mixing. Handle with care and use appropriate control measures.

Engulfment hazard. To prevent burial or suffocation, do not enter a confined space, such as a silo, bin, bulk truck, or other storage container or vessel that stores or contains kiln dust. Kiln dust and cement can buildup or adhere to the walls of a confined space. The kiln dust and cement can release, collapse or fall unexpectedly.

Properly ground all pneumatic conveyance systems. The potential exists for static build-up and static discharge when moving cement powders through a plastic, non-conductive, or non-grounded pneumatic conveyance system. The static discharge may result in damage to equipment and injury to workers.

Usage: Cutting, crushing or grinding hardened cement, concrete or other crystalline silica-bearing materials will release respirable crystalline silica. Use all appropriate measures of dust control or suppression, and Personal Protective Equipment (PPE) described in Section 8 below.

Housekeeping: Avoid actions that cause the kiln dust to become airborne during clean-up such as dry sweeping or using compressed air. Use HEPA vacuum or thoroughly wet with water to clean-up dust. Use PPE described in Section 8 below.

Storage Temperature: Unlimited. **Storage Pressure:** Unlimited.

Clothing: Promptly remove and launder clothing that is dusty or wet with kiln dust. Thoroughly wash skin after exposure to dust or wet kiln dust.

Section 8: EXPOSURE CONTROLS AND PERSONAL PROTECTION

Engineering Controls: Use local exhaust or general dilution ventilation or other suppression methods to maintain dust levels below exposure limits.

Personal Protective Equipment (PPE):

Respiratory Protection: Under ordinary conditions no respiratory protection is required. Wear a NIOSH approved respirator that is properly fitted and is in good condition when exposed to dust above exposure limits.

Eye Protection: Wear ANSI approved glasses or safety goggles when handling dust or wet kiln dust to prevent contact with eyes. Wearing contact lenses when using kiln dust, under dusty conditions, is not recommended.

Section 8: EXPOSURE CONTROLS AND PERSONAL PROTECTION (continued)

Skin Protection: Wear gloves, boot covers and protective clothing impervious to water to prevent skin contact. Do not rely on barrier creams, in place of impervious gloves. Remove clothing and protective equipment that becomes saturated with wet kiln dust or cement and immediately wash exposed areas.

Section 9: PHYSICAL AND CHEMICAL PROPERTIES

Physical State:	Solid (powder).	**Evaporation Rate:**	NA.
Appearance:	Gray, tan, or white powder.	**pH (in water):**	10 – 13
Odor:	None.	**Boiling Point:**	>1000° C
Vapor Pressure:	NA.	**Freezing Point:**	None, solid.
Vapor Density:	NA.	**Viscosity:**	None, solid.
Specific Gravity:	2.6-2.8	**Solubility in Water:**	2-20%

Section 10: STABILITY AND REACTIVITY

Stability: Stable. Keep dry until use. Avoid contact with incompatible materials. Kiln dust reacts with water, resulting in a slight release of heat, depending on the amount of lime (Calcium oxide) present.

Incompatibility: Kiln dust and wet cement is alkaline and is incompatible with acids, ammonium salts and aluminum metal. Kiln dust and cement dissolves in hydrofluoric acid, producing corrosive silicon tetrafluoride gas. Kiln dust and cement reacts with water to form silicates and calcium hydroxide. Silicates react with powerful oxidizers such as fluorine, boron trifluoride, chlorine trifluoride, manganese trifluoride, and oxygen difluoride.

Hazardous Polymerization: None. **Hazardous Decomposition:** None.

Section 11 and 12: TOXICOLOGICAL AND ECOLOGICAL INFORMATION

For questions regarding toxicological and ecological information refer to contact information in Section 1.

Section 13: DISPOSAL CONSIDERATIONS

Dispose of waste and containers in compliance with applicable Federal, State, Provincial and Local regulations.

Section 14: TRANSPORT INFORMATION

This product is not classified as a Hazardous Material under U.S. DOT or Canadian TDG regulations.

Section 15: REGULATORY INFORMATION

OSHA/MSHA Hazard Communication: This product is considered by OSHA/MSHA to be a hazardous chemical and should be included in the employer's hazard communication program.

CERCLA/SUPERFUND: This product is not listed as a CERCLA hazardous substance.

EPCRA SARA Title III: This product has been reviewed according to the EPA Hazard Categories promulgated under Sections 311 and 312 of the Superfund Amendment and Reauthorization Act of 1986 and is considered a hazardous chemical and a delayed health hazard.

EPRCA SARA Section 313: This product contains none of the substances subject to the reporting requirements of Section 313 of Title III of the Superfund Amendments and Reauthorization Act of 1986 and 40 CFR Part 372.

Section 15: REGULATORY INFORMATION (continued)

RCRA:	If discarded in its purchased form, this product would not be a hazardous waste either by listing or characteristic. However, under RCRA, it is the responsibility of the product user to determine at the time of disposal, whether a material containing the product or derived from the product should be classified as a hazardous waste.
TSCA:	Kiln dust and crystalline silica are exempt from reporting under the inventory update rule.
California Proposition 65:	Crystalline silica (airborne particulates of respirable size) and Chromium (hexavalent compounds) are substances known by the State of California to cause cancer.
WHMIS/DSL:	Products containing crystalline silica and calcium carbonate are classified as D2A, E and are subject to WHMIS requirements.

Section 16: OTHER INFORMATION

Abbreviations:

>	Greater than	NA	Not Applicable
ACGIH	American Conference of Governmental Industrial Hygienists	NFPA	National Fire Protection Association
CAS No	Chemical Abstract Service number	NIOSH	National Institute for Occupational Safety and Health
CERCLA	Comprehensive Environmental Response, Compensation and Liability Act	NTP	National Toxicology Program
		OSHA	Occupational Safety and Health Administration
CFR	Code for Federal Regulations	PEL	Permissible Exposure Limit
CL	Ceiling Limit	pH	Negative log of hydrogen ion
DOT	U.S. Department of Transportation	PPE	Personal Protective Equipment
EST	Eastern Standard Time	R	Respirable Particulate
HEPA	High-Efficiency Particulate Air	RCRA	Resource Conservation and Recovery Act
HMIS	Hazardous Materials Identification System	SARA	Superfund Amendments and Reauthorization Act
IARC	International Agency for Research on Cancer	T	Total Particulate
		TDG	Transportation of Dangerous Goods
LC_{50}	Lethal Concentration	TLV	Threshold Limit Value
LD_{50}	Lethal Dose	TWA	Time Weighted Average (8 hour)
mg/m^3	Milligrams per cubic meter	WHMIS	Workplace Hazardous Materials Information System
MSHA	Mine Safety and Health Administration		

This MSDS (Sections 1-16) was revised on March 3, 2005.

An electronic version of this MSDS is available at: www.lafarge-na.com under the Products section.

Lafarge North America Inc. (LNA) believes the information contained herein is accurate; however, LNA makes no guarantees with respect to such accuracy and assumes no liability in connection with the use of the information contained herein which is not intended to be and should not be construed as legal advice or as insuring compliance with any federal, state or local laws or regulations. Any party using this product should review all such laws, rules, or regulations prior to use, including but not limited to US and Canada Federal, Provincial and State regulations.

NO WARRANTY IS MADE, EXPRESS OR IMPLIED, OF MERCHANTABILITY, FITNESS FOR A PARTICULAR PURPOSE, OR OTHERWISE.

ACORD™ CERTIFICATE OF LIABILITY INSURANCE

DATE (MM/DD/YYYY): 6/26/2008

PRODUCER Phone: 610-992-3500 Fax: 610-992-3501
HUB International Pennsylvania, LLC
2 West Lafayette Street
Suite 400
Norristown PA 19401

INSURED
Clean Earth, Inc.
(Named Insureds cont'd below)
334 South Warminster Road
Hatboro PA 19040

THIS CERTIFICATE IS ISSUED AS A MATTER OF INFORMATION ONLY AND CONFERS NO RIGHTS UPON THE CERTIFICATE HOLDER. THIS CERTIFICATE DOES NOT AMEND, EXTEND OR ALTER THE COVERAGE AFFORDED BY THE POLICIES BELOW.

INSURERS AFFORDING COVERAGE	NAIC #
INSURER A: Zurich American Insurance Comp	16535
INSURER B: Steadfast Insurance Company	26387
INSURER C:	
INSURER D:	
INSURER E:	

COVERAGES

THE POLICIES OF INSURANCE LISTED BELOW HAVE BEEN ISSUED TO THE INSURED NAMED ABOVE FOR THE POLICY PERIOD INDICATED. NOTWITHSTANDING ANY REQUIREMENT, TERM OR CONDITION OF ANY CONTRACT OR OTHER DOCUMENT WITH RESPECT TO WHICH THIS CERTIFICATE MAY BE ISSUED OR MAY PERTAIN, THE INSURANCE AFFORDED BY THE POLICIES DESCRIBED HEREIN IS SUBJECT TO ALL THE TERMS, EXCLUSIONS AND CONDITIONS OF SUCH POLICIES. AGGREGATE LIMITS SHOWN MAY HAVE BEEN REDUCED BY PAID CLAIMS.

INSR LTR	ADD'L INSRD	TYPE OF INSURANCE	POLICY NUMBER	POLICY EFFECTIVE DATE (MM/DD/YY)	POLICY EXPIRATION DATE (MM/DD/YY)	LIMITS	
A		GENERAL LIABILITY X COMMERCIAL GENERAL LIABILITY CLAIMS MADE X OCCUR GEN'L AGGREGATE LIMIT APPLIES PER POLICY PRO-JECT LOC	GLO905269802	6/30/2008	6/30/2009	EACH OCCURRENCE DAMAGE TO RENTED PREMISES (Ea occurrence) MED EXP (Any one person) PERSONAL & ADV INJURY GENERAL AGGREGATE PRODUCTS - COMP/OP AGG	$1,000,000 $500,000 $10,000 $1,000,000 $2,000,000 $2,000,000
A		AUTOMOBILE LIABILITY X ANY AUTO ALL OWNED AUTOS SCHEDULED AUTOS X HIRED AUTOS X NON-OWNED AUTOS X Comp $1000 X Coll $1000	BAP905270002	6/30/2008	6/30/2009	COMBINED SINGLE LIMIT (Ea accident) BODILY INJURY (Per person) BODILY INJURY (Per accident) PROPERTY DAMAGE (Per accident)	$1,000,000 $ $ $
		GARAGE LIABILITY ANY AUTO				AUTO ONLY - EA ACCIDENT OTHER THAN AUTO ONLY EA ACC AGG	$ $ $
B		EXCESS/UMBRELLA LIABILITY X OCCUR CLAIMS MADE DEDUCTIBLE X RETENTION $10,000	SEO905270302	6/30/2008	6/30/2009	EACH OCCURRENCE AGGREGATE	$20,000,000 $20,000,000 $ $ $
A		WORKERS COMPENSATION AND EMPLOYERS' LIABILITY ANY PROPRIETOR/PARTNER/EXECUTIVE OFFICER/MEMBER EXCLUDED? If yes, describe under SPECIAL PROVISIONS below	WC905269202	6/30/2008	6/30/2009	X WC STATU-TORY LIMITS OTH-ER E.L. EACH ACCIDENT E.L. DISEASE - EA EMPLOYEE E.L. DISEASE - POLICY LIMIT	 $1,000,000 $1,000,000 $1,000,000
B		OTHER Pollution Liability	PLC905270500	6/30/2006	6/30/2009	$10,000,000 $100,000	per claim deductible

DESCRIPTION OF OPERATIONS / LOCATIONS / VEHICLES / EXCLUSIONS ADDED BY ENDORSEMENT / SPECIAL PROVISIONS

NAMED INSUREDS CONT'D:
Allied Environment Group, Inc., 2163 Merrick Ave., Merrick, NY 11566
Clean Earth of Carteret, Inc., 24 Middlesex Ave., Carteret, NJ 07008
Clean Earth Dredging Technologies, Inc., 334 South Warminster Rd., Hatboro, PA 19040
Clean Earth of Maryland, Inc., 1469 Oak Ridge Place, Hagerstown, MD 21740
Clean Earth of New Castle, Inc., 94 Pyles Lane, New Castle, DE 19720
Continued...

CERTIFICATE HOLDER

Industrial Waste Technologies, Inc.
22 Hillary Street
W Paterson NJ 07424

CANCELLATION

SHOULD ANY OF THE ABOVE DESCRIBED POLICIES BE CANCELLED BEFORE THE EXPIRATION DATE THEREOF, THE ISSUING INSURER WILL ENDEAVOR TO MAIL 30 DAYS WRITTEN NOTICE TO THE CERTIFICATE HOLDER NAMED TO THE LEFT, BUT FAILURE TO DO SO SHALL IMPOSE NO OBLIGATION OR LIABILITY OF ANY KIND UPON THE INSURER, ITS AGENTS OR REPRESENTATIVES.

AUTHORIZED REPRESENTATIVE

© ACORD CORPORATION 1988

DESCRIPTION OF OPERATIONS / LOCATIONS / VEHICLES / EXCLUSIONS / SPECIAL PROVISIONS

Clean Earth of North Jersey, Inc., 115 Jacobus Ave., South Kearny, NJ 07032
Clean Earth of Philadelphia, Inc., 3201 S. 61st Street, Philadelphia, PA 19153
Clean Earth of West Virginia, Inc., 3815 South State Route 2, Friendly, WV 26146
Clean Earth of Southeast Pennsylvania, Inc., 7 Steel Road East, Morrisville, PA 19067
Where required by a written contract or agreement with Clean Earth, the following entity is included as Additional Insured for General Liability:
Industrial Waste Technologies

APPENDIX H – CLEAN EARTH FACILITY PERMIT AND SUPPORTING DOCUMENTATION

JON S. CORZINE
Governor

State of New Jersey
DEPARTMENT OF ENVIRONMENTAL PROTECTION
Solid & Hazardous Waste Program
P.O. Box 414 401 East State Street
Trenton, New Jersey 08625-0414
Telephone: (609) 984-6985 Telecopier: (609) 633-9839
http://www.state.nj.us/dep/dshw

LISA P. JACKSON
Commissioner

RECYCLING CENTER GENERAL APPROVAL FOR CLASS B RECYCLABLE MATERIALS FOR PETROLEUM CONTAMINATED SOIL

Under the provisions of N.J.S.A. 13:1E-1 *et seq.* and N.J.S.A. 13:1E-99.11 *et seq.*, known as the Solid Waste Management Act and New Jersey Statewide Mandatory Source Separation and Recycling Act, respectively, and pursuant to N.J.A.C. 7:26A-1 *et seq.*, known as the Recycling Regulations, this approval is hereby issued to:

Clean Earth of Carteret, Inc.

Facility Type:	Recycling Center for Class B Materials
Lot No.:	3.02
Block No.:	1
Municipality:	Borough of Carteret
County:	Middlesex
Facility Registration No.:	132310

This General Approval is subject to compliance with all conditions specified herein and all regulations promulgated by the Department of Environmental Protection (Department).

This General Approval shall not prejudice any claim the State may have to riparian land nor does it allow the registrant to fill or alter, or allow to be filled or altered, in any way, lands that are deemed to be riparian, wetlands, stream encroachment or flood plains, or within the Coastal Area Facility Review Act (CAFRA) zone or are subject to the Pinelands Protection Act of 1979, nor shall it allow the discharge of pollutants to waters of this State without prior acquisition of the necessary grants, permits, or approvals from the Department of Environmental Protection.

March 7, 2007
Issuance Date

Robert M. Confer, Chief
Bureau of Solid & Hazardous Waste Permitting
Solid and Hazardous Waste Program

March 7, 2012
Expiration Date

CLEANEARTH

Manifest # 341391

GLOBAL JOB NUMBER: 108580 **FACILITY APPROVAL NUMBER:** 93070218

Please Check One:

☐ Clean Earth of Carteret
24 Middlesex Avenue
Carteret, NJ 07008
Ph: 732-541-9909

☐ Clean Earth of Maryland
1469 Oak Ridge Place
Hagerstown, MD 21740
Ph: 301-791-6220

☐ Clean Earth of New Castle
94 Pyles Lane
New Castle, DE 19720
Ph: 302-427-5633

☐ Other

☐ Clean Earth of Philadelphia
3201 S. 61st Street
Philadelphia, PA 19153
Ph: 215-724-5520

☐ Clean Earth of West Virginia
3815 South State Route 2
Friendly, WV 26146
Ph: 304-652-8580

☐ Clean Earth of Southeast Pennsylvania
7 Steel Road East
Morrisville, PA 19067
Ph: 215-428-1700

Non-Hazardous Material Manifest

(Type or Print Clearly)

GENERATOR'S NAME & SITE ADDRESS: Hoyden Ave. Bridge Repair Borden Ave. @ 27th St, Long Island City, NY	GROSS WEIGHT: ☐Tons ☐Yards TARE WEIGHT: ☐Tons ☐Yards
GENERATOR'S PHONE: John Kurre 212-256-1060	NET WEIGHT: ☐Tons ☐Yards

DESCRIPTION OF MATERIAL/SAMPLE ID AND LOCATION

Petroleum Contaminated Soil

GENERATOR'S CERTIFICATION – Incomplete and/or unsigned manifests will cause the load to be delayed and/or rejected.

I hereby certify that the above named material does not contain free liquid as defined by 40 CFR Part 260.10 or any applicable state law, is not a hazardous waste as defined by 40 CFR Part 261 or any applicable state law, is not a DOT hazardous substance as defined by 49 CFR Part 172 or any applicable state law, has been fully and accurately described above, classified, packaged and is in proper condition for transportation according to all applicable state and federal regulations.

Name: Dmitriy Shvets for NYC DOT Title: Inspector

Signature: [signature] Date and Time: 6/22/09 8:05 am

TRANSPORTER

Company: Rainbow Transport Phone Number: 908-850-9642

Address: 167 Stephens St Pk Rd, Hackettstown NJ Truck # and License Plate: 204 - AM121A

Driver: DEDICA TABORDA SW Haulers Permit #:

(Type or Print Clearly) (applicable state permit #)

I hereby certify that the above named material was picked up at the site listed above.

Driver Signature: DEDICA TABORDA Date and Time: 6-22-09

DESTINATION

I hereby certify that the above named material was delivered without incident to the facility noted above.

Driver Signature: DEDICA TABORDA Date and Time: 6-22-09

I hereby certify that the above named material has been accepted at the above referenced facility.

Authorized Signature: [signature] Date and Time: 6/22/09

GENERATOR

ACORD CERTIFICATE OF LIABILITY INSURANCE

OP ID ME RAINB-1 | DATE (MM/DD/YYYY) 02/18/09

PRODUCER

LCIA INC
839 KEARNY AVE
KEARNY NJ 07032
Phone: 201-997-0060 Fax: 201-997-3378

THIS CERTIFICATE IS ISSUED AS A MATTER OF INFORMATION ONLY AND CONFERS NO RIGHTS UPON THE CERTIFICATE HOLDER. THIS CERTIFICATE DOES NOT AMEND, EXTEND OR ALTER THE COVERAGE AFFORDED BY THE POLICIES BELOW.

INSURED

Rainbow Transport Corp.
167 Stephens Park Road
Hackettstown NJ 07840

INSURERS AFFORDING COVERAGE		NAIC #
INSURER A:	Castle Point Insurance Co.	163
INSURER B:	Rochdale Insurance Company	
INSURER C:	Markel Ins Co	38970
INSURER D:		
INSURER E:		

COVERAGES

THE POLICIES OF INSURANCE LISTED BELOW HAVE BEEN ISSUED TO THE INSURED NAMED ABOVE FOR THE POLICY PERIOD INDICATED. NOTWITHSTANDING ANY REQUIREMENT, TERM OR CONDITION OF ANY CONTRACT OR OTHER DOCUMENT WITH RESPECT TO WHICH THIS CERTIFICATE MAY BE ISSUED OR MAY PERTAIN, THE INSURANCE AFFORDED BY THE POLICIES DESCRIBED HEREIN IS SUBJECT TO ALL THE TERMS, EXCLUSIONS AND CONDITIONS OF SUCH POLICIES. AGGREGATE LIMITS SHOWN MAY HAVE BEEN REDUCED BY PAID CLAIMS.

INSR LTR	ADD'L INSRD	TYPE OF INSURANCE	POLICY NUMBER	POLICY EFFECTIVE DATE (MM/DD/YY)	POLICY EXPIRATION DATE (MM/DD/YY)	LIMITS	
C		GENERAL LIABILITY X COMMERCIAL GENERAL LIABILITY CLAIMS MADE X OCCUR GEN'L AGGREGATE LIMIT APPLIES PER: POLICY PRO-JECT LOC	MPK072173	03/15/08	03/15/09	EACH OCCURRENCE DAMAGE TO RENTED PREMISES (Ea occurence) MED EXP (Any one person) PERSONAL & ADV INJURY GENERAL AGGREGATE PRODUCTS - COMP/OP AGG	$ 1,000,000 $ 50,000 $ 5,000 $ 1,000,000 $ 3,000,000 $ 2,000,000
A		AUTOMOBILE LIABILITY ANY AUTO ALL OWNED AUTOS X SCHEDULED AUTOS X HIRED AUTOS X NON-OWNED AUTOS X $1,000 Comp Ded X $1,000 Coll Ded	AC0200082 MCS 90 FORM ENDORSED CA9948 FORM ENDORSED	11/24/08	11/24/09	COMBINED SINGLE LIMIT (Ea accident) BODILY INJURY (Per person) BODILY INJURY (Per accident) PROPERTY DAMAGE (Per accident)	$ 1,000,000 $ $ $
		GARAGE LIABILITY ANY AUTO				AUTO ONLY - EA ACCIDENT OTHER THAN AUTO ONLY: EA ACC AGG	$ $ $
		EXCESS/UMBRELLA LIABILITY OCCUR CLAIMS MADE DEDUCTIBLE RETENTION $				EACH OCCURRENCE AGGREGATE	$ $
B		WORKERS COMPENSATION AND EMPLOYERS' LIABILITY ANY PROPRIETOR/PARTNER/EXECUTIVE OFFICER/MEMBER EXCLUDED? If yes, describe under SPECIAL PROVISIONS below	RWC-3170661	02/15/09	02/15/10	WC STATU-TORY LIMITS X OTH-ER E.L. EACH ACCIDENT E.L. DISEASE - EA EMPLOYEE E.L. DISEASE - POLICY LIMIT	$ $ 1,000,000 $ 1,000,000 $ 1,000,000
		OTHER					

DESCRIPTION OF OPERATIONS / LOCATIONS / VEHICLES / EXCLUSIONS ADDED BY ENDORSEMENT / SPECIAL PROVISIONS

The Workers Compensation Coverage includes All States Endorsement Coverage.
New York State is included.

CERTIFICATE HOLDER

Industrial Waste Technologies
NJ

CANCELLATION

SHOULD ANY OF THE ABOVE DESCRIBED POLICIES BE CANCELLED BEFORE THE EXPIRATION DATE THEREOF, THE ISSUING INSURER WILL ENDEAVOR TO MAIL 30 DAYS WRITTEN NOTICE TO THE CERTIFICATE HOLDER NAMED TO THE LEFT, BUT FAILURE TO DO SO SHALL IMPOSE NO OBLIGATION OR LIABILITY OF ANY KIND UPON THE INSURER, ITS AGENTS OR REPRESENTATIVES.

AUTHORIZED REPRESENTATIVE
Gus Campisano

© ACORD CORPORATION 1988

APPENDIX I – WASTE TRANSPORTER PERMIT

NEW YORK STATE DEPARTMENT OF ENVIRONMENTAL CONSERVATION
DIVISION OF SOLID & HAZARDOUS MATERIALS

PART 364
WASTE TRANSPORTER PERMIT NO. NJ-586

Pursuant to Article 27,Titles 3 and 19 of the Environmental Conservation Law and 6 NYCRR 364

PERMIT ISSUED TO:

RAINBOW TRANSPORT CORPORATION
167 STEPHENS PARK ROAD
HACKETTSTOWN, NJ 07840

CONTACT NAME: TOM JUSKUS
COUNTY: OUT OF STATE
TELEPHONE NO: (973)246-9493

PERMIT TYPE:

☐ NEW
☐ RENEWAL
■ MODIFICATION

EFFECTIVE DATE: 06/26/2009
EXPIRATION DATE: 06/27/2010
US EPA ID NUMBER:

AUTHORIZED WASTE TYPES BY DESTINATION FACILITY:
The Permittee is Authorized to Transport the Following Waste Type(s) to the Destination Facility listed :

Destination Facility	Location	Waste Type(s)
BELLMAWR WATERFRONT DEVELOPMENT	BELLMAWR , NJ	Non-Hazardous Industrial/Commercial Petroleum Contaminated Soil
CLEAN EARTH OF CARTERET	CARTERET , NJ	Petroleum Contaminated Soil
CLEAN EARTH OF NEW CASTLE, INC.	NEW CASTLE , DE	Non-Hazardous Industrial/Commercial Petroleum Contaminated Soil
CLEAN EARTH OF NORTH JERSEY	SOUTH KEARNY , NJ	Non-Hazardous Industrial/Commercial Asbestos Petroleum Contaminated Soil
CLEAN EARTH OF PHILADELPHIA	PHILADELPHIA , PA	Non-Hazardous Industrial/Commercial Petroleum Contaminated Soil
CLEAN EARTH OF SOUTHEASTERN PA., INC.	MORRISVILLE , PA	Non-Hazardous Industrial/Commercial Petroleum Contaminated Soil
COPLAY AGGREGATES	WHITEHALL , PA	Non-Hazardous Industrial/Commercial Petroleum Contaminated Soil
DEEP GREEN OF NEW YORK	NEW WINDSOR , NY	Non-Hazardous Industrial/Commercial Petroleum Contaminated Soil
DURAPORT MARINE & RAIL	BAYONNE , NJ	Non-Hazardous Industrial/Commercial Petroleum Contaminated Soil
EGMI OF NEW JERSEY	KEASBAY , NJ	Non-Hazardous Industrial/Commercial Petroleum Contaminated Soil

*** AUTHORIZED WASTE TYPES BY DESTINATION FACILITY LISTING (continued on next page) ***

NOTE: By acceptance of this permit, the permittee agrees that the permit is contingent upon strict compliance with the Environmental Conservation Law, all applicable regulations, and the General Conditions printed on the back of this page.

ADDRESS:

New York State Department of Environmental Conservation
Division of Solid & Hazardous Materials - Waste Transporter Program
625 Broadway, 9th Floor
Albany, NY 12233-7253

AUTHORIZED SIGNATURE: _____ Date: JUN 29 2009

NEW YORK STATE DEPARTMENT OF ENVIRONMENTAL CONSERVATION
DIVISION OF SOLID & HAZARDOUS MATERIALS

PART 364
WASTE TRANSPORTER PERMIT NO. NJ-586

Pursuant to Article 27,Titles 9 and 15 of the Environmental Conservation Law and 6 NYCRR 364

PERMIT ISSUED TO:

RAINBOW TRANSPORT CORPORATION
167 STEPHENS PARK ROAD
HACKETTSTOWN, NJ 07840

CONTACT NAME: TOM JUSKUS
COUNTY: OUT OF STATE
TELEPHONE NO: (973)246-9493

PERMIT TYPE:

☐ NEW
☐ RENEWAL
■ MODIFICATION

EFFECTIVE DATE: 06/26/2009
EXPIRATION DATE: 05/27/2010
US EPA ID NUMBER:

AUTHORIZED WASTE TYPES BY DESTINATION FACILITY: (Continued)
The Permittee is Authorized to Transport the Following Waste Type(s) to the Destination Facility listed :

Destination Facility	Location	Waste Type(s)
GROWS LANDFILL(WASTE MGT.)	MORRISVILLE , PA	Non-Hazardous Industrial/Commercial Petroleum Contaminated Soil
HAZLETON CREEK PROPERTIES,LLC	HAZLETON , PA	Non-Hazardous Industrial/Commercial Petroleum Contaminated Soil
MID ATLANTIC RECYCLING TECHNOLOGIES	VINELAND , NJ	Non-Hazardous Industrial/Commercial Petroleum Contaminated Soil
PURE SOIL TECHNOLOGIES	JACKSON , NJ	Petroleum Contaminated Soil Petroleum Contaminated Soil
SLRD COMPANY MULLICA HILL, LLC	MULLICA HILL , NJ	Petroleum Contaminated Soil
SOIL SAFE, INC.	LOGAN TOWNSHIP , NJ	Non-Hazardous Industrial/Commercial Petroleum Contaminated Soil
WASTE MANAGEMENT - TULLYTOWN	MORRISVILLE , PA	Non-Hazardous Industrial/Commercial Petroleum Contaminated Soil

NEW YORK STATE DEPARTMENT OF ENVIRONMENTAL CONSERVATION
DIVISION OF SOLID & HAZARDOUS MATERIALS

PART 364
WASTE TRANSPORTER PERMIT NO. NJ-586

Pursuant to Article 27, Titles 3 and 15 of the Environmental Conservation Law and 6 NYCRR 364

PERMIT ISSUED TO:

RAINBOW TRANSPORT CORPORATION
167 STEPHENS PARK ROAD
HACKETTSTOWN, NJ 07840

CONTACT NAME: TOM JUSKUS
COUNTY: OUT OF STATE
TELEPHONE NO: (973)248-9493

PERMIT TYPE:

☐ NEW
☐ RENEWAL
■ MODIFICATION

EFFECTIVE DATE: 06/26/2009
EXPIRATION DATE: 05/27/2010
US EPA ID NUMBER:

AUTHORIZED VEHICLES:

The Permittee is Authorized to Operate the Following Vehicles to Transport Waste:
(Vehicles enclosed in <>'s are authorized to haul Residential Raw Sewage and/or Septage only)

79 (Seventy Nine) Permitted Vehicle(s)

NJ AJ176S
NJ AJ176S
NJ AJ660T
NJ AJ661T
NJ AK383T
NJ AK385T
NJ AK386T
NJ AK384W
NJ AK456Y
NJ AK457Y
NJ AK503Z
NJ AK532T
NJ AK533T
NJ AK534T
NJ AK535T
NJ AK659X
NJ AK660X
NJ AK661X
NJ AL130M
NJ AL131M
NJ AL189U
NJ AL215A
NJ AL217A
NJ AL251K
NJ AL280G
NJ AL320L
NJ AL373S
NJ AL374S
NJ AL557Z
NJ AL558Z
NJ AL559Z
NJ AL560T
NJ AL599T
NJ AL599A
NJ AL600A
NJ AL612C
NJ AL638M
NJ AL639S
NJ AL640S
NJ AL654S
NJ AL655S
NJ AL688B
NJ AL689B
NJ AL674A
NJ AL725P
NJ AL726P
NJ AL730J
NJ AL772N
NJ AL773N
NJ AL774N
NJ AL777N
NJ AL778N
NJ AL803R
NJ AL805R
NJ AL806R
NJ AL807R
NJ AL808R
NJ AL862U
NJ AL863U
NJ AL864U
NJ AM120A
NJ AM121A
NJ AM122A
NJ AM161C
NJ AM162C
NJ AM191E
NJ AM192E
NJ AM193E
NJ AM194E
NJ AM283B
NJ AM284B
NJ AM285B
NJ AM288B
NJ AM363D
NJ AM489A
NJ AM635B
NJ AM636D
NJ AM637D
NJ AM638D
End of List

Attachment 5

Spill Closure Report

SPILL CLOSURE REPORT

BORDEN AVENUE BRIDGE WEST ABUTMENT AND WINGWALL RECONSTRUCTION
BORDEN AVENUE BETWEEN 27TH STREET AND REVIEW AVENUE
LONG ISLAND CITY, NEW YORK 11101

NYCDOT CONTRACT NO.: #HBQ1162E
NYSDEC SPILL NO. 0903437

STV PROJECT NO.: #0201606-0134

MARCH 1, 2011

Prepared by:

STV Incorporated
225 Park Avenue South
New York, NY 10003
Phone: (212) 777-4400
Fax: (646) 654-1861

Prepared for:

NEW YORK CITY DOT

NYCDOT
55 Water Street, 5th Floor
New York, New York 10041
Phone: (212) 839-4846
Fax: (212) 839-4925
Attn: George Klein, P.E

Appendix C – Stipulation Agreement

Appendix D – Treatment System Schematic Diagram

Appendix E – Sediment and Sludge Waste Disposal Manifests and Truck Weigh Tickets

Appendix F – Summary Table of Waste Shipments

40.739016
-73.942666

2.0 BACKGROUND

2.1 Site Description

Borden Avenue is a two-lane east-west oriented local city street extending from the East River to Greenpoint Avenue in the Borough of Queens, NY. The Borden Avenue Bridge is located just south of the Long Island Expressway between 27th Street and Review Avenue in Long Island City, NY 11101. Figure 1 provides a Site Location Map.

The Bridge, identified by the NYCDOT as B.I.N 2-24041-0, is a retractile type moveable bridge. The bridge structure carries a two-lane two-way vehicular roadway with sidewalks on each side over the Dutch Kills.

2.2 Site Background and Spill Discovery

In order to perform preliminary bridge inspection work, a cofferdam was installed around the west abutment and its wingwalls. The cofferdam allowed for the dewatering within its confines to lower the water level through a series of permitted wells and facilitate sediment excavation. The dewatering system was designed to have the groundwater pass through a settling tank and flow meter prior to discharge to the Dutch Kills. During the excavation within the cofferdam, contractor personnel detected odors. On the morning of June 19, 2009, NYCDOT discovered a sheen and noticed an odor in the dewatering settling tank. NYCDOT shut down the dewatering operation and the contractor placed oil spill booms around the outfall area to prevent migration into the Dutch Kills.

At an estimated depth from the top of the channel to 10 feet below grade, excavated sediments began exhibiting the appearance and odor of petroleum. Two samples of the impacted sediment and two water samples: one within the settling tank and one at the outfall discharge, were collected on June 19, 2009 by Environmental Planning & Management (EPM), the environmental consultant for HAKS, the project resident engineering firm for the project. The samples were sent to Test America Laboratories in Shelton, CT (Test America) for analysis on an expedited turnaround request. In addition, Moretrench collected a water sample from within the cofferdam excavation on June 19, 2009 and shipped the sample to York Analytical Laboratories of Stratford, CT. Results of both sets of samples are summarized below.

2.2.1 Summary of Sediment and Water Analytical Results

The samples collected by EPM were analyzed for petroleum fingerprint, volatile organic compounds (VOCs), semi-volatile organic compounds (SVOCs), pesticides, herbicides, and metals. STV compared the results of the samples to NYSDEC soil and groundwater standards. Specifically, soil concentrations were compared to the NYSDEC Recommended Soil Cleanup Objectives (TAGM 4046) and the State's Brownfield Cleanup, Track 1 - Unrestricted Use: Generic Soil Cleanup Table (Track 1) pursuant to 6 NYCRR Part 375-6.8. Water samples were compared to NYSDEC Technical & Operational Guidance Series (TOGS) Ambient Water Quality Standards and Guidance Values.

The preliminary fingerprint identified a mix between a No. 6 fuel oil and motor fuel. Acetone, eight individual polyaromatic hydrocarbons (PAHs), the pesticides dieldrin and endrin, and nine metals exceeded both TAGM 4046 and Track 1 objectives in both soil samples. Heptachlor epoxide also

needed to address the emergency repair, i.e. management of sediments and dewatering fluid within the cofferdam.

It was also agreed that in lieu of a complete State Pollutant Discharge Elimination System (SPDES) permit application process, NYSDEC would allow the submittal of a SPDES Permit Equivalent Application. NYSDEC established surface water discharge standards based on the contamination present in the sediments and water. A copy of the SPDES permit is contained in the CAP. The Stipulation Agreement, which contains the discharge standards issued by the NYSDEC, is presented in Appendix C.

4.0 REMEDIAL ACTIVITIES

This section summarizes the tasks completed during Site remediation and includes the following:

- Dewatering and Water Treatment;
- Sediment excavation, temporary storage, and disposal;
- Placement of Geomembrane and Fill.

4.1 Dewatering and Water Treatment

The water treatment system was designed by Moretrench to provide for sufficient constituent removal from the water to meet NYSDEC discharge requirements. The treatment system was designed for a discharge rate of 600 gallons per minute (gpm). Details and specifications for the treatment system are contained in the CAP. A schematic drawing of the treatment components is provided as Appendix D.

A summary of the general treatment components is as follows.

- One settling tank
- One Chemical Mixing Tank
- One Chemical Injection and Storage Unit
- Two Clarifiers rated for 300 gpm
- One Sludge Pump
- One Cone Bottom Tank
- Two Electric Transfer Pumps
- Three 6-bag Filter Housings in parallel operation with a 600 gpm nominal capacity each
- Two con-code Carbon Adsorbers, each with 10,000 lbs activated carbon, 600 gpm nominal capacity in series
- One 6-inch diameter flow meter with totalizer in the 90 to 1,200 gpm range
- Piping and/or flexible hosing from the existing settling tank to the flow meter.

The pumping of the dewatering wells re-commenced on December 10, 2009 after the treatment system was operational and the NYSDEC Tidal Wetlands Permit for the project was amended to include the expanded water treatment system. A pH adjustment component was added to the water treatment system on December 11, 2009 to address pH readings that exceeded the discharge limits specified in the Corrective Action Plan. This issue was communicated to the NYSDEC in a letter dated December 11, 2009. Treated effluent samples began to be collected on a weekly basis for laboratory analysis. All parameters were below the wastewater limits for surface water discharges specified in the Corrective Action Plan and Stipulation Agreement.

Upon completion of the excavation required for the bridge reconstruction, the geomembrane and stone backfill was placed and water treatment continued until August 9, 2010 at 1500 hours at which time it ceased. However, the settling tank that was required in the original NYSDEC Wetlands Permit remained in use as part of the dewatering operation. A total of 12,152,173 gallons of water were treated and discharged to the Dutch Kills. The final treated effluent sample was collected for analysis on August 3, 2010.

the project is completed. Excavations will be backfilled with clean fill and the original grade restored. The slab, tenting, and any other times pertaining to the staging area will be removed from the site.

4.3 Placement of Geomembrane and Fill

Backfilling inside the cofferdam excavation began during the week of June 21, 2010. As per the construction details approved by NYSDEC, a 1-foot layer of rounded river bed stone base was placed atop the base of the excavation followed by a 60-mil high density polyethylene (HDPE) geomembrane manufactured by GSE (GM 13-60). The geomembrane was placed both landward and seaward of the abutment and wingwalls. The geomembrane was installed with overlapped, glued seams. For the seaward side of the abutments and wingwalls, a 1-foot overlap of geomembrane was set which was topped by a 1-foot layer of rounded river bed stone to protect the fabric from sharp stones. A 2-foot overlap of geomembrane was bolted to the pike caps as per manufacturer's instructions. Large riprap stone was placed atop the 1-foot stone base on the seaward side to the approximate mud line elevation. Figure 4 provides a drawing the construction sequence for the abutment and wingwalls including placement of the geomembrane and fill on the seaward side of the abutment and wingwalls.

For the landward side of the abutment and wingwalls, the same configuration of round river bed stone base, a single layer of geomembrane, and a layer of river bed stone cover was set in place. Structural fill (NYSDOT 203.21 select structural fill) was used to backfill to approximate existing grade. Figure 5 provides backfill details for the landward side of the abutment and wingwalls.

Figure 1

Site Location Map

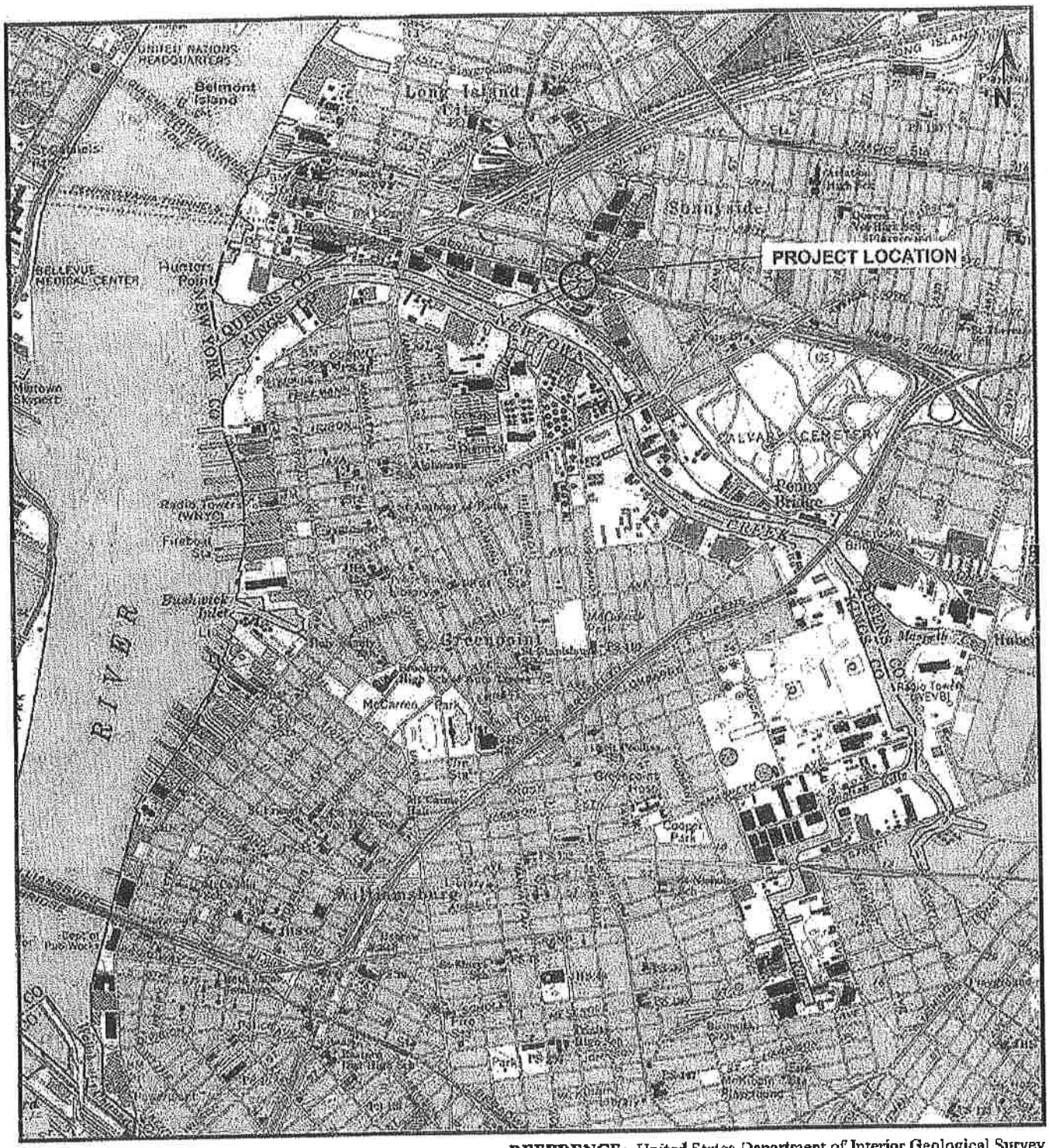

SCALE: 1" = 2,000'

0 1,000 2,000

REFERENCE: United States Department of Interior Geological Survey Brooklyn, NY (1967, Photorevised 1979)

PROJECT LOCATION MAP
BORDEN AVENUE BRIDGE OVER THE DUTCH KILLS CREEK
NEW YORK CITY DEPARTMENT OF TRANSPORTATION

Figure 2

Sediment Staging Area – Sheet 1 of 2

FED. RD. REG. NO.	STATE	FEDERAL AID PROJECT NO.	SHEET NO.	TOTAL SHEETS
	NEW YORK			XXX

EMERGENCY RECONSTRUCTION OF WEST ABUTMENT AND WINGWALLS OF BORDEN AVENUE BRIDGE OVER DUTCH KILLS

P.I.N. 84197MB983BR	QUEENS	B.I.N. 2-24041-0

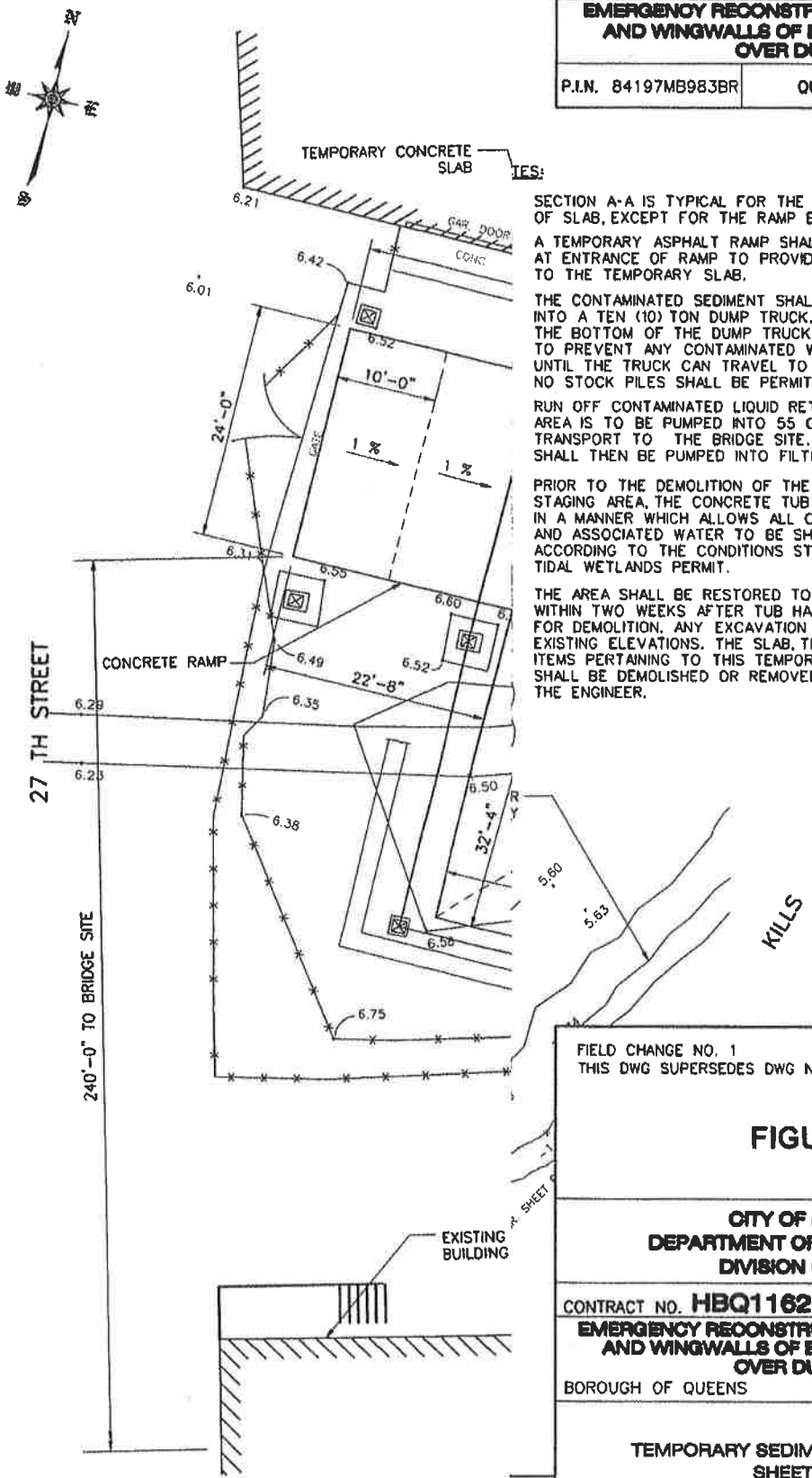

NOTES:

SECTION A-A IS TYPICAL FOR THE PERIMETER OF SLAB, EXCEPT FOR THE RAMP ENTRANCE.

A TEMPORARY ASPHALT RAMP SHALL BE PROVIDED AT ENTRANCE OF RAMP TO PROVIDE TRUCK ACCESS TO THE TEMPORARY SLAB.

THE CONTAMINATED SEDIMENT SHALL BE LOADED DIRECTLY INTO A TEN (10) TON DUMP TRUCK. KILN DUST WILL BE PLACED AT THE BOTTOM OF THE DUMP TRUCK DOOR PRIOR TO LOADING TO PREVENT ANY CONTAMINATED WATER FROM LEAKING UNTIL THE TRUCK CAN TRAVEL TO THE STORAGE AREA NO STOCK PILES SHALL BE PERMITTED.

RUN OFF CONTAMINATED LIQUID RETRIEVED IN STAGING AREA IS TO BE PUMPED INTO 55 GALLON DRUMS FOR TRUCK TRANSPORT TO THE BRIDGE SITE. THE 55 GALLON DRUMS SHALL THEN BE PUMPED INTO FILTERING SYSTEM.

PRIOR TO THE DEMOLITION OF THE TEMPORARY STAGING AREA, THE CONCRETE TUB SHALL BE CLEANED IN A MANNER WHICH ALLOWS ALL CONTAMINATED SOIL AND ASSOCIATED WATER TO BE SHIPPED OR TREATED ACCORDING TO THE CONDITIONS STATED UNDER THE TIDAL WETLANDS PERMIT.

THE AREA SHALL BE RESTORED TO ITS EXISTING CONDITION WITHIN TWO WEEKS AFTER TUB HAS BEEN PREPARED FOR DEMOLITION. ANY EXCAVATION SHALL BE FILLED TO ITS EXISTING ELEVATIONS. THE SLAB, TENT AND ANY OTHER ITEMS PERTAINING TO THIS TEMPORARY STAGING AREA SHALL BE DEMOLISHED OR REMOVED, AS DIRECTED BY THE ENGINEER.

FIELD CHANGE NO. 1 [1]
THIS DWG SUPERSEDES DWG NO. S-558 (12/29/09)

FIGURE 2

CITY OF NEW YORK
DEPARTMENT OF TRANSPORTATION
DIVISION OF BRIDGES

CONTRACT NO. **HBQ1162E**

EMERGENCY RECONSTRUCTION OF WEST ABUTMENT AND WINGWALLS OF BORDEN AVENUE BRIDGE OVER DUTCH KILLS

BOROUGH OF QUEENS B.I.N. 2-24041-0

TEMPORARY SEDIMENT STAGING AREA
SHEET 1 OF 2

DWG. NO.	SCALE	DATE	SHEET
S-558R [1]	AS NOTED	12/29/09 [1]	98

STV Incorporated
architects/engineers/planners/interior designers
225 Park Avenue South, New York, NY 10003

1/8"=1'-0"

1/7/2010 I:\Projects\Q201606\Q201606_000\1\70_Technical Documents Reports\73_Technical Reports\1606\Borden\Emergency Work\NY 03-09-09\Other Dwgs\Permit Drawings\S-558(Revised).dgn

Figure 3

Sediment Staging Area – Sheet 2 of 2

FED. RD. REG. NO.	STATE	FEDERAL AID PROJECT NO.	SHEET NO.	TOTAL SHEETS
	NEW YORK			XXX

EMERGENCY RECONSTRUCTION OF WEST ABUTMENT AND WINGWALLS OF BORDEN AVENUE BRIDGE OVER DUTCH KILLS

P.I.N. 84197MB983BR	QUEENS	B.I.N. 2-24041-0

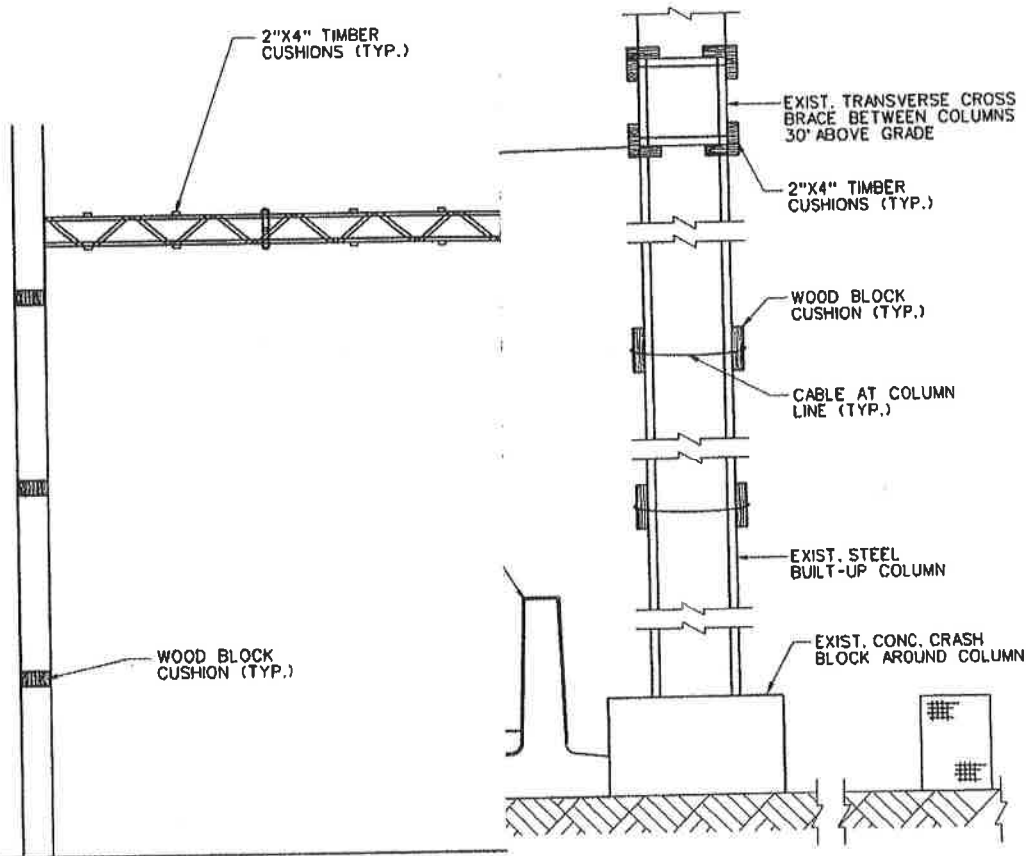

CAL BENT CROSS SECTION

SCALE: 3/4"=1'-0"

TYPIC

FIGURE 3

CITY OF NEW YORK
DEPARTMENT OF TRANSPORTATION
DIVISION OF BRIDGES

CONTRACT NO. **HBQ1162E**

EMERGENCY RECONSTRUCTION OF WEST ABUTMENT AND WINGWALLS OF BORDEN AVENUE BRIDGE OVER DUTCH KILLS

BOROUGH OF QUEENS B.I.N. 2-24041-0

TEMPORARY SEDIMENT STAGING AREA SHEET 2

DWG. NO.	SCALE AS NOTED		SHEET

8/6/2009 L:\Projects\0201606\0201606_00011\70_Technical Documents Reports\73_Technical Reports\1606\Borden\Emergency Work\NY 03-09-09\Other Dwgs\TempStaging2.dgn

Figure 4

Construction Staging Section 5 (S-359)

FED. RD. REG. NO.	STATE	FEDERAL AID PROJECT NO.	SHEET NO.	TOTAL SHEETS
	NEW YORK			XXX

EMERGENCY RECONSTRUCTION OF WEST ABUTMENT AND WINGWALLS OF BORDEN AVENUE BRIDGE OVER DUTCH KILLS

P.I.N. 84197MB983BR	QUEENS	B.I.N. 2-24041-0

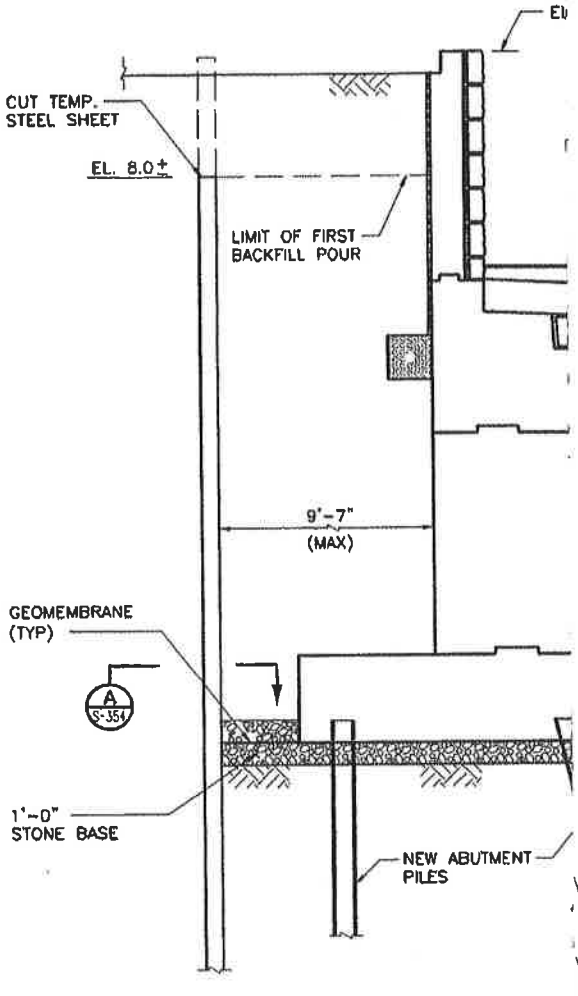

ABUTMENT
SCALE: 1/4

SUGGESTED SEQUENCE OF CONSTRUCTION FOR ABUTMENT AND WINGWALL

1. NEW DOLPHIN TIMBER PILES WILL BE INSTALLED OUTSIDE OF COFFERDAM AREA AND INSTALLED AFTER THE COFFERDAM IS REMOVED. FOR LOCATION OF PILES SEE DWG S-153.
2. CONSTRUCT REMAINDER OF ABUTMENT AND WINGWALL.
3. FOR THE BACKSIDE OF ABUTMENT AND WINGWALLS CONSTRUCTION SEE DWG S-354.
4. FOR THE FRONT OF THE ABUTMENT AND WINGWALL INSTALL A SINGLE LAYER OF GEOMEMBRANE WITH A 1'-0 OVERLAP WHERE ADJACENT FABRICS ARE SET. THE FABRIC SHALL BE GSE, GM 13-60 MIL THICK OR APPROVED EQUAL. A 1'-0" COVER OF ROUNDED RIVER BED STONE OF A MAXIMUM 3" DIAMETER SHALL BE SET ON TOP OF FABRIC TO PROTECT IT FROM ANY SHARP STONE EDGE THAT CAN TEAR THE FABRIC. A 2'-0" OVERLAP OF GEOMEMBRANE SHALL BE BOLTED TO THE PILE CAP AS PER MANUFACTURER'S SPECIFICATIONS. (PRIOR TO ALL FILL PLACEMENT ON THE FRONTSIDE OF THE ABUTMENT AND WINGWALLS THE CONTRACTOR SHALL NOTIFY THE ENGINEER. THE ENGINEER SHALL BE PRESENT DURING THE GEOMEMBRANE INSTALLATION AND FILL PLACEMENT. THE CONTRACTOR SHALL PLACE ALL STONE FILL AND RIP RAP CAREFULLY TO NOT DAMAGE THE GEOMEMBRANE.)
5. REMOVE COFFERDAM. CUT SHEETING IN BACKSIDE OF WALL AND ABUTMENT TO ELEV. 8' . BEFORE REMOVING SHEETING IN FRONT OF WALLS FILL WITH RIP RAP TO MATCH EXISTING STREAM ELEVATION, THEN REMOVE SHEETING AND STEEL PILES IN FRONT OF WALLS AND ABUTMENT.
6. AFTER STEEL SHEETS ARE PULLED CONTRACTOR SHALL ENSURE THAT THE RIP RAP ELEVATION MATCHES THE EXISTING MUDLINE ELEVATION. IF THE ELEVATIONS VARY THE CONTRACTOR SHALL PROVIDE ADDITIONAL RIPRAP TO MATCH THE ELEVATIONS.

FIGURE 4

CITY OF NEW YORK
DEPARTMENT OF TRANSPORTATION
DIVISION OF BRIDGES

CONTRACT NO. **HBQ1162E**

EMERGENCY RECONSTRUCTION OF WEST ABUTMENT AND WINGWALLS OF BORDEN AVENUE BRIDGE OVER DUTCH KILLS

BOROUGH OF QUEENS B.I.N. 2-24041-0

CONSTRUCTION STAGING SECTION 5

1

STV Incorporated
architects/engineers/planners/interior designers
225 Park Avenue South, New York, NY 10003

1/4"=1'-0"

DWG. NO.	SCALE	DATE	SHEET
S-359	AS NOTED	11/20/09	88

11/16/2009\\Projects\0201606\0201606_0001\70_Technical Documents Reports\73_Technical Reports\1605\Borden\Emergency Work\Wr 03-09-09\Other Dwgs\Permit Drawings\S-359.dgn

Figure 5

Backfill Sections (S-354)

FED. RD. REG. NO.	STATE	FEDERAL AID PROJECT NO.	SHEET NO.	TOTAL SHEETS
	NEW YORK			XXX

EMERGENCY RECONSTRUCTION OF WEST ABUTMENT AND WINGWALLS OF BORDEN AVENUE BRIDGE OVER DUTCH KILLS

P.I.N. 84197MB983BR	QUEENS	B.I.N. 2-24041-0

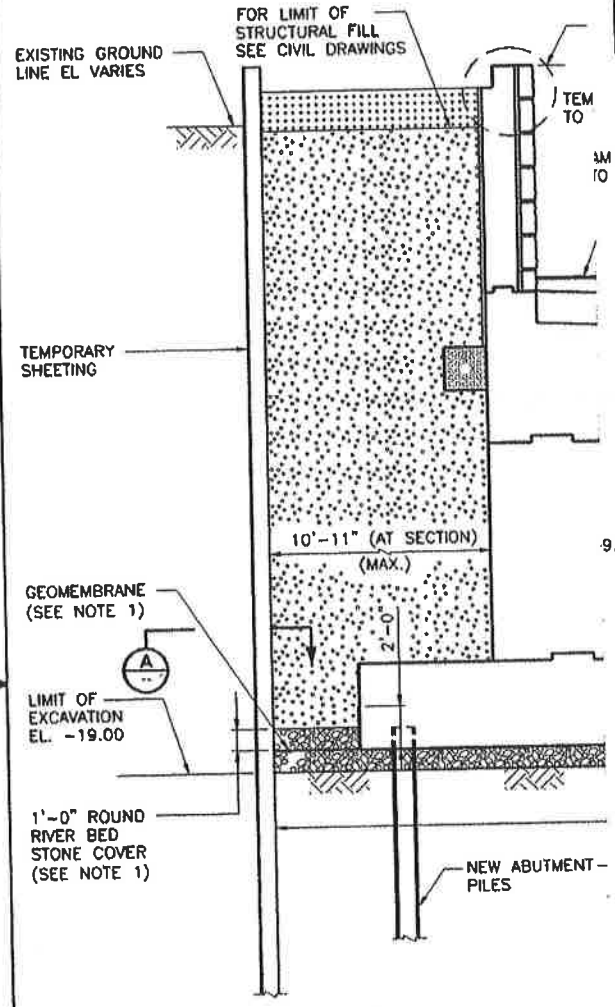

NOTES:

1. FOR BACKSIDE OF THE ABUTMENT AND WINGWALLS INSTALL A SINGLE LAYER OF GEOMEMBRANE WITH A 1'-0" OVERLAP WHERE ADJACENT FABRICS ARE SET. ALL ADJACENT PANELS SHALL BE WELDED AS PER MANUFACTURER'S SPECIFICATIONS. A 2'-0" OVERLAP OF GEOMEMBRANE SHALL BE BOLTED TO THE PILE CAP AS PER MANUFACTURER'S SPECIFICATIONS. THE GEOMEMBRANE SHALL BE CUT TO FIT THE SHAPE OF THE COFFERDAM AS SHOWN ON SECTION A. THE FABRIC SHALL BE GSE, GM 13-60 MIL THICK OR APPROVED EQUAL. A 1'-0" COVER OF ROUNDED RIVER BED STONE OF A MAXIMUM 3" DIAMETER SHAL BE SET ON TOP OF THE FABRIC. (THE ENGINEER SHAL BE PRESENT DURING THE GEOMEMBRANE INSTALLATION AND FILL PLACEMENT. ALL STRUCTURAL FILL SHALL BE COMPACTED AS PER SPECIFICATIONS FOR SELECT STRUCTURAL FILL).
2. FOR LIMIT OF HIGHWAY EMBANKMENT FILL SEE DWG. NO. C-301R.
3. FOR FILL ON FRONT SIDE OF THE ABUTMENT AND WINGWALLS SEE DWG. S-359.

LEGEND

- SELECT STRUCTURAL FILL (ITEM 203.21)
- HIGHWAY EMBANKMENT MATERIAL (HIGHWAY ESTIMATE)

SECTION C
SCALE: 1/4"=1'-0"

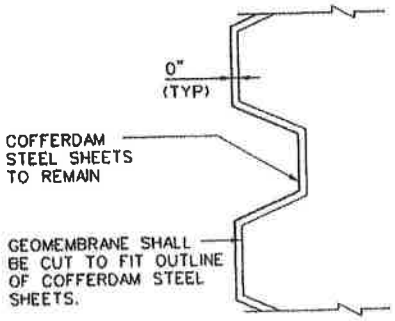

SECTION A
SCALE: 1/2"=1'-0"

FIGURE 5

CITY OF NEW YORK
DEPARTMENT OF TRANSPORTATION
DIVISION OF BRIDGES

CONTRACT NO. **HBQ1162E**

EMERGENCY RECONSTRUCTION OF WEST ABUTMENT AND WINGWALLS OF BORDEN AVENUE BRIDGE OVER DUTCH KILLS

BOROUGH OF QUEENS B.I.N. 2-24041-0

BACKFILL SECTIONS [1]

DWG. NO.	SCALE	DATE	SHEET
S-354	AS NOTED	11/20/09	83

STV Incorporated
architects/engineers/planners/interior designers
225 Park Avenue South, New York, NY 10003

1/4"=1'-0"

11/16/2009k:\Projects\0201606\0201606_0001\70_Technical Documents Reports\73_Technical Reports\1606\Borden\Emergency Work\NY 03-09-09\Other Dwgs\Permit Drawings\S-354.dgn

Table 1

Soil Exceedences for Sediment Waste

Table 1

Soil Exceedences -
Borden Avenue Bridge
Over Dutch Kills
Long Island City, New York 11101

Sample ID			S-1		S-2	
Sampling Date			6/19/2009		6/19/2009	
Matrix			Soil		Soil	
Depth (feet)						
Units			(µg/Kg)		(µg/Kg)	
	NYSDEC Recommended Soil Cleanup Objective (µg/Kg)	NYSDEC (Part 375-6.8) Soil Cleanup Objective** (Track 1) (µg/Kg)				
VOCs						
Acetone	200	50	210	J*	340	*
Methylene Chloride	100	50	100	JB	98	JB
Xylenes, Total	1,200	260	300		90	
SEMIVOLATILE COMPOUNDS						
Benzo[a]anthracene	224 or MDL	1,000	6,200	J	8,900	J
Chrysene	400	1,000	6,900	J	9,200	J
Bis(2-ethylhexyl) phthalate	50,000	NC	130,000		110,000	
Di-n-octyl phthalate	50,000	NC	ND		ND	
Benzo[b]fluoranthene	1,100 or MDL	1,000	5,000	J	5,300	J
Benzo[k]fluoranthene	1,100 or MDL	800	1,900	J	1,800	J
Benzo[a]pyrene	61 or MDL	1,000	6,400	J	7,200	J
Indeno[1,2,3-cd]pyrene	3,200	500	14,000		14,000	
Dibenz(a,h)anthracene	14 or MDL	330	11,000	J	11,000	J
PEST/ HERBICIDES						
4,4'-DDD	2,900	3.3	310		120	
4,4'-DDE	2,100	3.3	130		66	
4,4'-DDT	2,100	3.3	410	*	260	*
Aldrin	41	5	6.4	J	ND	
Dieldrin	44	5	180		74	
Endrin	100	14	270		200	
Heptachlor epoxide	20	NC	27		11	
PCBs						
Aroclor-1242	10,000	100	590		720	
Aroclor-1254	10,000	100	520		1,100	
Aroclor-1260	10,000	100	760		890	

Footnotes:

NYSDEC - New York State Department of Environmental Conservation.

USEPA - United States Environmental Protection Agency.

VOCs - Volatile Organic Compounds.

SVOCs - Semi- Volatile Organic Compounds.

Table 1 (continued)

Soil Exceedences -
Borden Avenue Bridge
Over Dutch Kills
Long Island City, New York 11101

Sample ID Sampling Date Matrix Depth (feet) Units				S-1 6/19/2009 Soil (mg/Kg)		S-2 6/19/2009 Soil (mg/Kg)
	NYSDEC Recommended Soil Cleanup Objective (mg/Kg)	Eastern USA Background (mg/Kg)	NYSDEC (Part 375-6.8) Soil Cleanup Objective** (Track 1) (mg/Kg)			
METALS						
Arsenic	7.5 or SB	3 - 12	13	**45.6**		**34**
Beryllium	0.16 or SB	0.1 - 1.75	7.2	0.7	J	0.8
Cadmium	1 or SB	0.1 - 1.0	2.5	**51.6**		**104**
Chromium	10 or SB	1.5 - 40	NC	342		530
Copper	25 or SB	1 - 50	50	**974**		**1,450**
Lead	SB	200 - 500	63	**607**		**1,370**
Mercury	0.1	0.001 - 0.2	0.18	**2.4**		**2.6**
Nickel	13 or SB	0.5 - 25	30	**392**		**337**
Selenium	2 or SB	0.1 - 3.9	3.9	**8.8**		**5**
Silver	SB	NC	2	**11.2**		**19.5**
Zinc	20 or SB	9 - 50	109	**1,350**		**2,240**

Footnotes:

NYSDEC - New York State Department of Environmental Conservation.

USEPA - United States Environmental Protection Agency.

VOCs - Volatile Organic Compounds.

SVOCs - Semi- Volatile Organic Compounds.

U - The compound was not detected at the indicated concentration.

J - Data indicates the presence of a compound that meets the identification criteria. The result is less than the quantitation limit but greater than zero. The concentration given is an approximate value.

B - The Analyte was found in an associate blank, as well as the sample.

SB - Site Background.

NC - No Criteria.

MDL - Method Detection Limit.

mg/Kg - milligrams per kilogram.

- Indicates an exceedance of NYSDEC's Recommended Soil Cleanup Objective

Table 2

Groundwater Exceedences for Dewatering

Table 2

Groundwater Exceedences -
Borden Avenue Bridge
Over Dutch Kills
Long Island City, New York 11101

Sample ID Sampling Date Matrix Units		W-Tank 6/19/2009 Aqueous (µg/L)		W-Exc 6/19/2009 Aqueous (µg/L)	
	NYSDEC TOGS Standards and Guidance Values (µg/L)				
SEMIVOLATILE COMPOUNDS (GC/MS)					
Benzo[a]anthracene	0.002	8.6	J	0.74	J
Chrysene	0.002	8.3	J	0.66	J
Bis(2-ethylhexyl) phthalate	5	290		17	
Benzo[b]fluoranthene	0.002	4.4	J	0.52	J
Benzo[k]fluoranthene	0.002	1.7	J	ND	
Indeno[1,2,3-cd]pyrene	0.002	4	J	0.92	J
PCBs					
Aroclor-1242	0.09*	1.6		ND	
Aroclor-1254	0.09*	2.3		ND	
Aroclor-1260	0.09*	2.2		ND	
METALS					
Antimony	3	16.2	J	ND	
Arsenic	25	25.8		7.3	J
Cadmium	5	13.1		ND	
Chromium	50	101		18.4	J
Copper	200	290		54.8	
Lead	25	280		47.0	
Nickel	100	126		30.0	

Footnotes (Groundwater):

NYSDEC - New York State Department of Environmental Conservation.
TOGS - Technical and Operational Guidance Series.
VOCs - Volatile Organic Compounds.
SVOCs - Semi- Volatile Organic Compounds.
U - The compound was not detected at the indicated concentration.
J - Data indicates the presence of a compound that meets the identification criteria. The result is less than the quantitation limit but greater than zero. The concentration given is an approximate value.
NC - No Criteria.
ug/L - micrograms per liter.
mg/L - milligrams per liter.
- Indicates an exceedance of TOGs.

Appendix A

Corrective Action Regulatory Approvals

New York State Department of Environmental Conservation
Division of Environmental Remediation, Region 2
Bureau of Spill Prevention and Response
One Hunters Point Plaza
47-40 21st Street, Long Island City, NY 11101-5407
Phone: (718) 482-4995 • **Fax:** (718) 482-4098
Website: www.dec.ny.gov

Alexander B. Grannis
Commissioner

August 31, 2009

George Klein, P.E.
Deputy Chief Engineer
NYC DOT
Bureau of Specialty Engineering and Construction
Division of Bridges
55 Water Street, 5th Floor
New York, NY 10041

Re: Spill #0903437
Borden Avenue Bridge
Borden Avenue and 7th Street
LIC, NY

Dear Mr. Klein:

The Division of Marine Resources and the Bureau of Spill Prevention and Response within the New York State Department of Environmental Conservation (the Department) have reviewed the amended *Corrective Action Plan* (CAP) dated August 19, 2009 and submitted by STV on behalf of the New York City Department of Transportation. Both the Division of Marine Resources and the Bureau of Spill Prevention and Response have approved the CAP. We would also like to inform you that a Stipulation Agreement has been forwarded to your office under separate cover. Please review it and return the signed Stipulation Agreement as soon as possible.

Should you have any questions or wish to discuss the matter, please feel free to contact Jesselynne Krief at (718) 482-3988 or myself at (718) 482-4634.

Sincerely,

Jesselynne Krief
Marine Biologist I

Sincerely,

Raphael Ketani, CPG
Engineering Geologist II

NEW YORK STATE DEPARTMENT OF ENVIRONMENTAL CONSERVATION
Facility DEC ID 2-6304-01440

PERMIT

Under the Environmental Conservation Law (ECL)

Permittee and Facility Information

Permit Issued To:
NYC DEPT OF TRANSPORTATION
40 WORTH ST 11TH FL
NEW YORK, NY 10003
(212) 676-0557

Facility:
NYC DOT - BORDEN AVE BRIDGE
BORDEN AVE BTWN 25TH & 27TH ST
LONG ISLAND CITY, NY 11101

Facility Location: in QUEENS COUNTY **Village:** Long Island City
Facility Principal Reference Point: NYTM-E: 589.262 NYTM-N: 4510.311
Latitude: 41°44'20.1" Longitude: 74°56'34.1"
Project Location: West Bridge Abutment
Authorized Activity: Repair / replace west bridge abutment.

Permit Authorizations

Tidal Wetlands - Under Article 25
Permit ID 2-6304-01440/00004

New Permit	Effective Date: 2/12/2009	Expiration Date: 12/31/2010
Modification # 1	Effective Date: 4/2/2009	Expiration Date: 12/31/2010
Modification # 2	Effective Date: 11/19/2009	Expiration Date: 12/31/2010
Modification # 3	Effective Date: 1/26/2010	Expiration Date: 12/31/2010

Water Quality Certification - Under Section 401 - Clean Water Act
Permit ID 2-6304-01440/00005

New Permit	Effective Date: 2/12/2009	Expiration Date: 12/31/2010
Modification # 1	Effective Date: 4/2/2009	Expiration Date: 12/31/2010
Modification # 2	Effective Date: 11/19/2009	Expiration Date: 12/31/2010
Modification # 3	Effective Date: 1/26/2010	Expiration Date: 12/31/2010

Excavation & Fill in Navigable Waters - Under Article 15, Title 5
Permit ID 2-6304-01440/00006

New Permit	Effective Date: 2/12/2009	Expiration Date: 12/31/2010
Modification # 1	Effective Date: 4/2/2009	Expiration Date: 12/31/2010
Modification # 2	Effective Date: 11/19/2009	Expiration Date: 12/31/2010
Modification # 3	Effective Date: 1/26/2010	Expiration Date: 12/31/2010

NYSDEC Approval

By acceptance of this permit, the permittee agrees that the permit is contingent upon strict compliance with the ECL, all applicable regulations, and all conditions included as part of this permit.

Permit Administrator: JOHN F CRYAN, Regional Permit Administrator

seaward than the existing slope. Within ninety (90) days of permit issuance, the Permittee must submit for review and approval a proposed Mitigation Plan to NYSDEC Bureau of Marine Resources, 47-40 21st Street, Long Island City, New York 11101 (Attention: Jesse Krief). The Mitigation Plan must include a location, a detailed description of the project, and a time schedule for the mitigation project as well as permission from adjacent land owners for all work proposed on adjacent properties not owned by NYCDOT. The Mitigation Plan must be of sufficient detail and substance that it can be accepted by DEC with minimal revision. Within two (2) weeks of receiving comments to the proposed Mitigation Plan, Permittee must submit a revised proposed Mitigation Plan incorporating DEC's comments. Upon approval of the proposed Mitigation Plan Permittee must complete the Mitigation Plan pursuant to the approved schedule or, if no schedule is approved, without delay. Permittee may contact Jesse Krief in the NYSDEC Bureau of Marine Resources at (718) 482-6464 with any questions concerning the Mitigation Plan.

4. **Removal of Temporary Structures** Within sixty (60) days of the completion of the abutment reconstruction activities all temporary structures installed to facilitate the reconstruction must be removed in their entirety. After removal is complete all areas must be restored to original grades using only clean/natural fill and stabilized. Temporary structures to be removed include the sediment staging area, the temporary flume, outfall pipe and baffle, temporary timber pontoon bridge and landings.

5. **HDPE Geomembrane Liner Requirements** Installation of a continuous 60 MIL HDPE geomembrane liner must be installed over all oil contaminated sediment within the cofferdam surrounding the bridge abutment, and on slopes that expose similarly oil contaminated sediment. A one (1) foot minimum cushioning layer must be installed on either side of the liner in order to prevent puncturing. All liner panels must be hot welded together with at least a six (6) inch overlap. All edges of the geomembrane panels adjacent to the bridge abutment must be sealed to the bridge abutment. All liner edges not adjacent to the abutment must be buried in an anchoring trench. Where space is limited and an anchoring trench is not possible liner edges must be left flat and carefully covered with backfill.

6. **Timber Fender Replacement** The replacement of the timber fender system is limited to areas where the fender existed prior to removal of the abutment and must be attached directly to the abutment face as shown on the project plans referenced in Natural Resources Permit Condition 2, specifically sheets 8, 18 and 94R.

7. **Notice of Intent to Commence Work** At least five (5) days prior to commencement of the permitted activity, Permittee must complete and submit the attached "Notice of Intent to Commence Work" to NYSDEC Bureau of Marine Resources, 47-40 21st Street, Long Island City, New York 11101 (Attention: Jesselynne Krief).

8. **Post Permit Sign** The permit sign enclosed with this permit shall be posted in a conspicuous location on the worksite and adequately protected from the weather.

9. **Post Construction Photographs** Within 30 days of the completion of work authorized by this permit, Permittee must provide post-construction photographs of the work area to: NYSDEC Bureau of Marine Resources, 47-40 21st Street, Long Island City, New York 11101 (Attention: Jesse Krief).

10. **Best Management Practices** Best management practices must be employed to prevent the loss of construction materials, debris, and sediment from entering the waterways. Such practices may include, but are not limited to silt fencing, hay bales, floating booms, and oil capture systems. At minimum a floating boom with attached silt curtain must be installed encircling the entire project site for both the

Natural Resource Permit Condition 2. All effluent must be transported to and incorporated into the treatment system.

23. **Storage of Construction Equipment & Materials** The storage of construction equipment and materials must be confined to within the project work site and or upland areas greater than 35 linear feet from the tidal wetland boundary and outside the area of excavation.

24. **Disposal of Excavated Material** All dredged material must be retained so as to not re-enter any water body, tidal wetland, or protected buffer area and be disposed of at an upland site approved to accept petroleum contaminated sediments. Excavated sediments from within the cofferdam area must be placed directly into a conveyance vehicle for transportation to the stockpile area. The sidecasting (double dipping) or temporary storage of excavated material is prohibited.

25. **Prohibited Treated Wood** Use of wood treated with creosote is prohibited. Wood treated with Pentachlorophenol (PCP) must not be used in wetlands or surface waters. Standard pressure treated lumber with CCA and its use is permitted.

26. **Use of wood Preservatives** Pressure treated wood used for construction of in-water structures must have been treated with a preservative and must have undergone a treatment process approved (stamped or otherwise marked as certified) by the American Wood Preservative Association.

Chromated Copper Arsenate (CCA) pressure treated wood must be clean and free of CCA surface deposits. Wood with surface deposits must be washed for at least 5 minutes under running water prior to use. (Note the following condition for the handling of wash water.)

Any wood debris such as sawdust or wash water must not enter any water body, including wetlands, or protected buffer areas. Field application of CCA is strictly prohibited.

27. **Debris Removal** Should any demolition or construction debris fall into the waterway or enter the tidal wetlands, it must be removed immediately.

28. **Debris Disposal** Any debris or excess material from construction of this project will be completely removed from the adjacent area (upland) and removed to an approved upland area for disposal. No debris is permitted in tidal wetlands or tidal wetlands adjacent area or protected buffer areas. All demolition and construction debris must be properly disposed of at a licensed facility.

29. **Clean Fill Material Only** All fill material must consist of "clean" sand, gravel, or soil. The use of material such as asphalt, slag, fly-ash, recycled concrete aggregate (RCA), broken concrete, or demolition debris is strictly prohibited.

30. **Containment of Disturbed Soils** All disturbed areas where soil will be temporarily exposed or stockpiled for longer than one (1) week must be contained by a continuous line of staked hay bales/silt curtain (or other NYSDEC approved method) placed on the seaward side between the fill and wetland or protected buffer area. Tarps are authorized to supplement these approved methods.

31. **No Interference With Navigation** There shall be no unreasonable interference with navigation by the work herein authorized.

32. **Prior Approval of Changes** If the Permittee desires to make any changes in construction techniques, species to be planted, the site plan, any mitigation plan, scheduling or staging of

1. **Facility Inspection by The Department** The permitted site or facility, including relevant records, is subject to inspection at reasonable hours and intervals by an authorized representative of the Department of Environmental Conservation (the Department) to determine whether the permittee is complying with this permit and the ECL. Such representative may order the work suspended pursuant to ECL 71- 0301 and SAPA 401(3).

The permittee shall provide a person to accompany the Department's representative during an inspection to the permit area when requested by the Department.

A copy of this permit, including all referenced maps, drawings and special conditions, must be available for inspection by the Department at all times at the project site or facility. Failure to produce a copy of the permit upon request by a Department representative is a violation of this permit.

2. **Relationship of this Permit to Other Department Orders and Determinations** Unless expressly provided for by the Department, issuance of this permit does not modify, supersede or rescind any order or determination previously issued by the Department or any of the terms, conditions or requirements contained in such order or determination.

3. **Applications For Permit Renewals, Modifications or Transfers** The permittee must submit a separate written application to the Department for permit renewal, modification or transfer of this permit. Such application must include any forms or supplemental information the Department requires. Any renewal, modification or transfer granted by the Department must be in writing. Submission of applications for permit renewal, modification or transfer are to be submitted to:

Regional Permit Administrator
NYSDEC REGION 2 HEADQUARTERS
47-40 21ST ST
LONG ISLAND CITY, NY11101 -5407

4. **Submission of Renewal Application** The permittee must submit a renewal application at least 30 days before permit expiration for the following permit authorizations: Excavation & Fill in Navigable Waters, Tidal Wetlands, Water Quality Certification.

5. **Permit Modifications, Suspensions and Revocations by the Department** The Department reserves the right to modify, suspend or revoke this permit. The grounds for modification, suspension or revocation include:

a. materially false or inaccurate statements in the permit application or supporting papers;

b. failure by the permittee to comply with any terms or conditions of the permit;

c. exceeding the scope of the project as described in the permit application;

d. newly discovered material information or a material change in environmental conditions, relevant technology or applicable law or regulations since the issuance of the existing permit;

e. noncompliance with previously issued permit conditions, orders of the commissioner, any provisions of the Environmental Conservation Law or regulations of the Department related to the permitted activity.

NOTICE OF INTENT TO COMMENCE WORK

Date: _____

NYSDEC Marine Resources
Attn. Jesse Krief
N.Y.S.D.E.C Region 2 Office
47-40 21st Street
Long Island City, N.Y. 11101

Re: NYSDEC Permit No. 2-6304-01440/00004
NYC Dept. Of Transportation
Borden Avenue bridge over Dutch Kills
Borden Avenue between 27th Street & Review Avenue
Queens, New York

Dear Ms. Krief:

In accordance with Natural Resource Condition 7 of the referenced permit, I hereby serve notice to commence work on _____, 200____.

This is also to certify that, having read this entire permit, I am fully aware of and understand the general and special conditions therein, and agree to comply with all such conditions. I further understand that prior to undertaking any modification to the subject work, I must seek and receive written approval of the NYSDEC Regional Permit Administrator.

_____
Signature of Permittee

_____
Name of Permittee (please print)

_____
Signature of Contractor

_____
Name of Contractor (please print)

_____
Street Address of Contractor

_____
City, State, & Zip Code of Contractor

_____
Telephone Number of Contractor

WARNING

The permittee and his contractor (if any) are required to follow all permit conditions. Violations of the permit may lead to legal action, including the imposition of substantial monetary fines and corrective work.

cc: NYSDEC Environmental Permits

Appendix B

Photo Log

Appendix B - Remediation Photographs

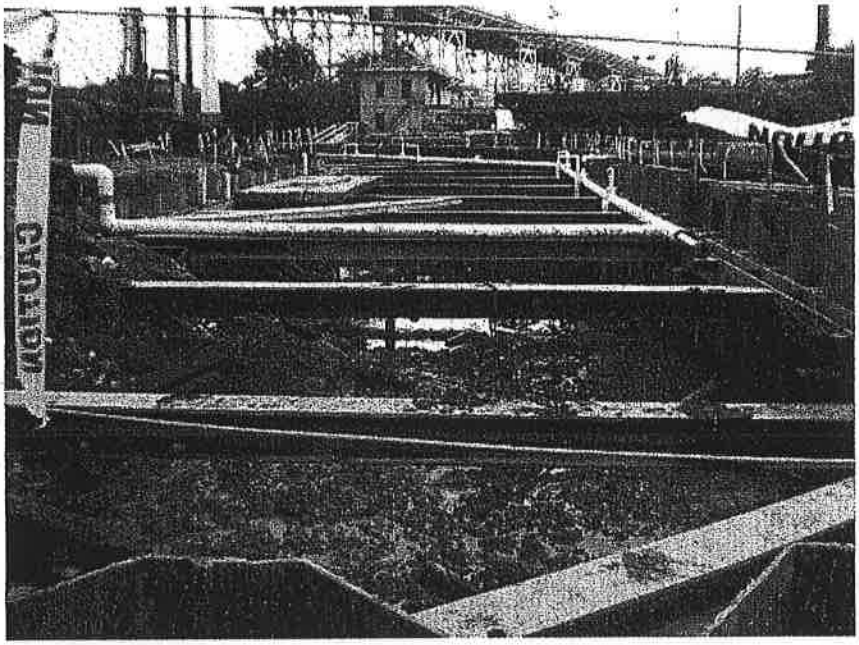

Photograph 1 – Looking east-northeast at sediment within southern side of cofferdam (6/19/10)

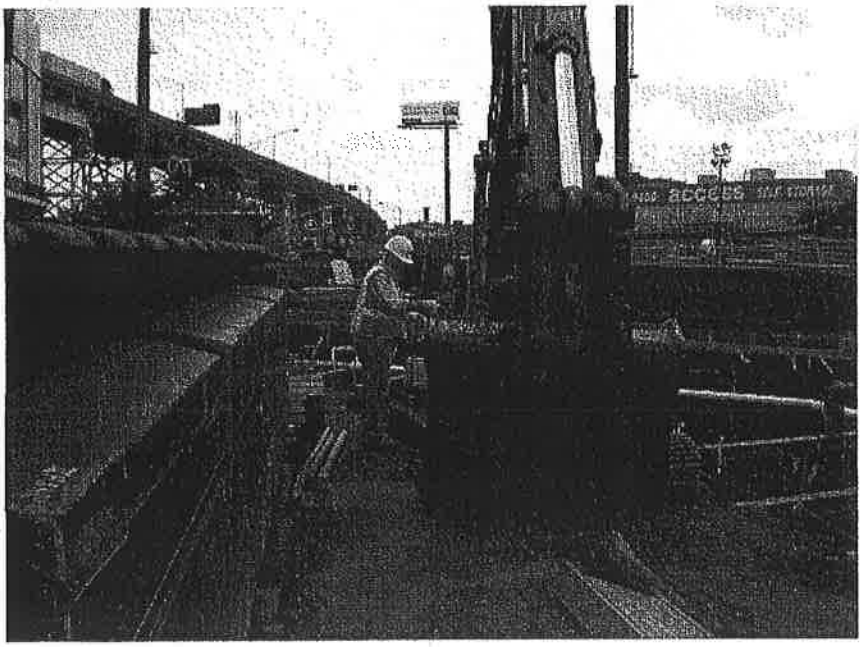

Photograph 2 – EPM collecting sediment sample form excavator bucket (6/19/09)

Appendix B - Remediation Photographs

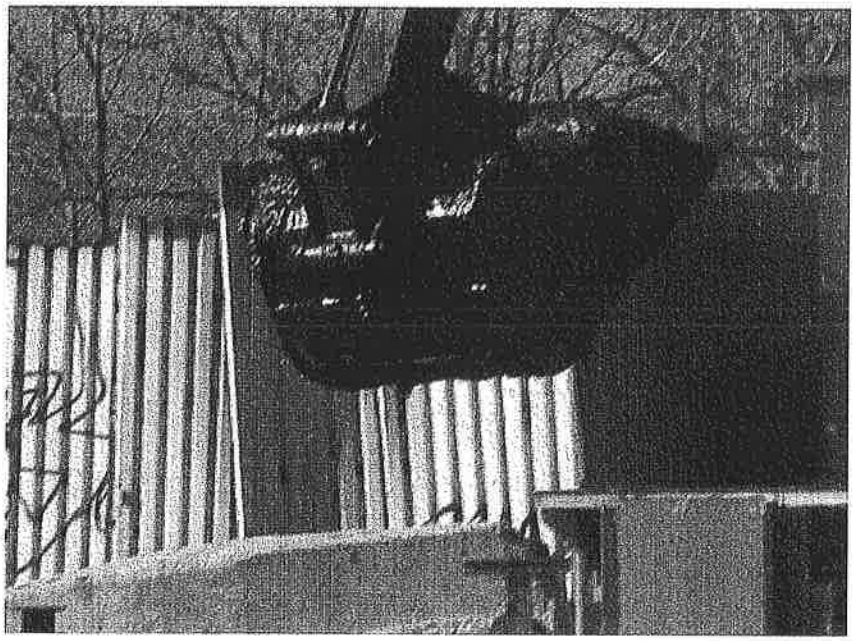

Photograph 5 – Petroleum-contaminated sediment in excavator bucket (01/05/10)

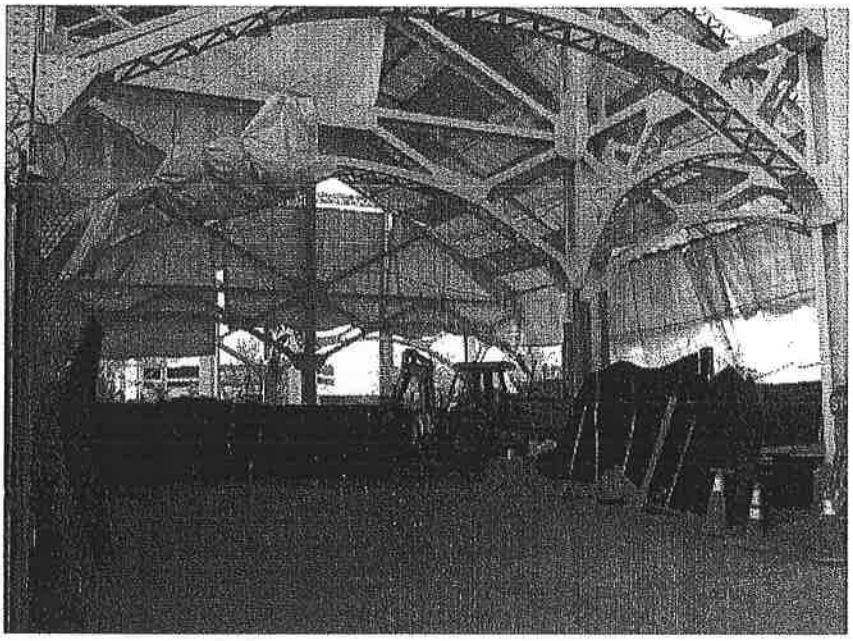

Photograph 6 – Sediment Staging Area. Note concrete slab and tarp cover overhead (01/05/10)

Appendix B - Remediation Photographs

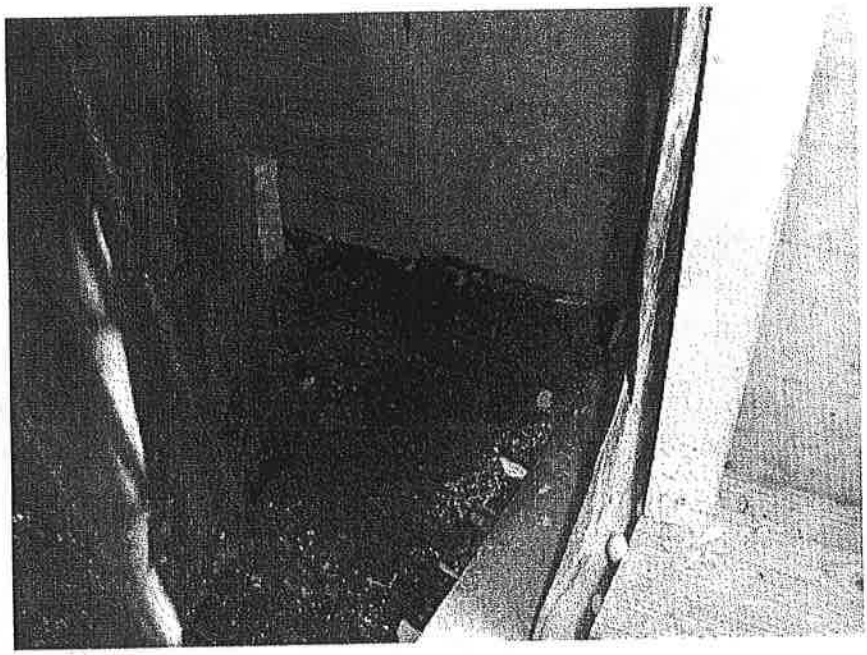

Photograph 9 – Membrane cut to fit around cofferdam sheeting on landward side of the footing (6/22/10)

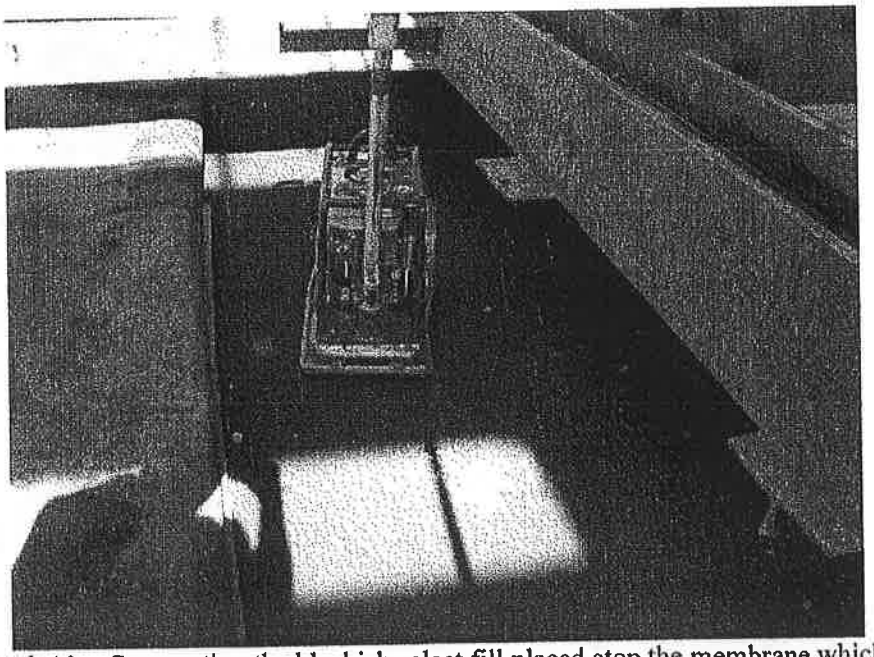

Photograph 10 – Compacting the blackish select fill placed atop the membrane which can be seen to the left coming up the back wall of the footing and over the top (6/22/10)

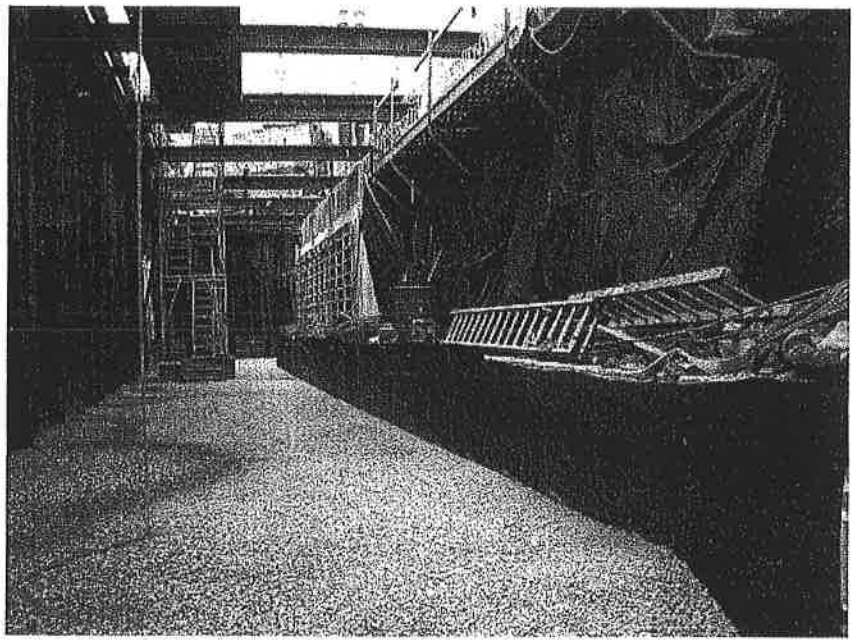

Photograph 13 – River bed stone atop the geomembrane which is seen running up the side of the footing (7/29/10)

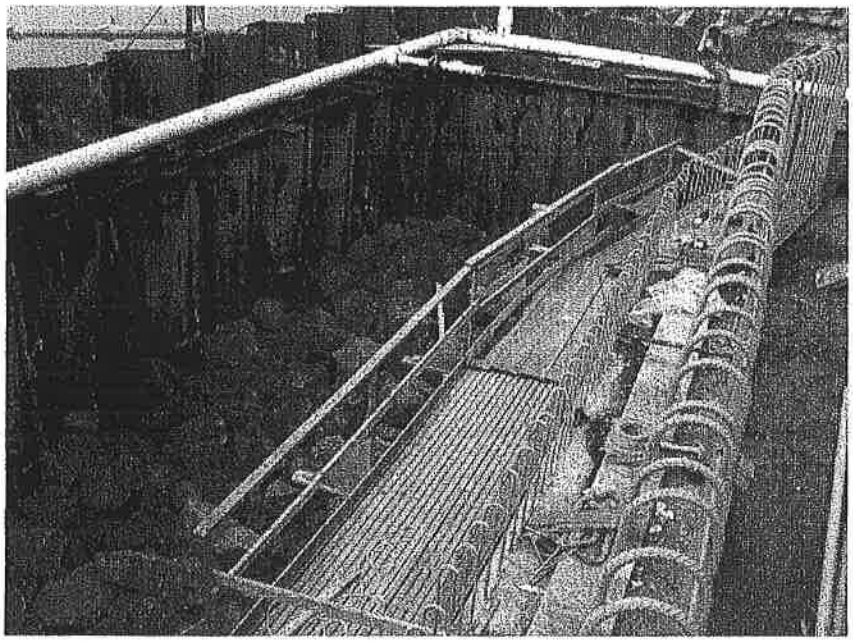

Photograph 14 – Riprap placement on the seaward side of the abutment (8/10/10)

Appendix C

Stipulation Agreement

NEW YORK CITY Department of Transportation
JANETTE SADIK-KHAN, Commissioner

September 3, 2009

BY CERTIFIED MAIL RETURN RECEIPT REQUESTED
AND E-MAIL

John K. Urda, Esq.
New York State Department of Environmental Conservation
Office of General Counsel, Region 2
47-40 21st St.
Long Island City, New York 11101-5401

RE: Borden Avenue Bridge, NYSDEC Spill No. 0903437

Dear Mr. Urda:

Enclosed please find the Stipulation in the above-referenced matter executed by the New York City Department of Transportation.

I would appreciate receiving a copy of the final Stipulation countersigned by the New York State Department of Environmental Conservation.

Sincerely,

Kedari Reddy

Kedari Reddy, Esq.
Director, Office of Environmental Compliance Assessment

NYC Department of Transportation
Division of Legal Affairs
55 Water Street, New York, NY 10041
T: 212.839.6633 F: 212.839.6646
www.nyc.gov/dot

This Stipulation shall terminate when the Department issues a written determination that no further remedial activities are required with respect to the petroleum discharge at the Site (the "Termination Date").

8. The Respondent and its employees, servants, agents, lessees, sublessees, successors, and assigns hereby waive any right to pursue reimbursement of monies expended by the Respondent prior to the Termination Date as against the State of New York or the New York Environmental Protection and Spill Compensation Fund (the "Spill Fund"), and agree to indemnify and hold harmless the Spill Fund from any and all legal or equitable claims, suits, causes of action, or demands whatsoever with respect to the Site that any of same has or may have as a result of the Respondent's entering into or fulfilling the terms of this Stipulation with respect to the Site.

NEW YORK CITY DEPARTMENT
OF TRANSPORTATION

9/3/09
Date

BY: _____

Henry Pereira, Deputy Comm.
Print name and title

_____
Date

_____
Regional Director, NYSDEC Region 2

TABLE 2
Wastewater Limits For Surface Water Discharges

COMPOUND	GASOLINE	FUEL OIL
pH range	6.5 - 8.5	6.5 - 8.5
Benzene[1]	7 ug/l	7 ug/l
Ethylbenzene	5 ug/l	5 ug/l
Toluene	5 ug/l	5 ug/l
o-Xylene	5 ug/l	5 ug/l
m-Xylene	5 ug/l	5 ug/l
p-Xylene	5 ug/l	5 ug/l
Mixed xylenes	5 ug/l	5 ug/l
Naphthalene	10 ug/l	10 ug/l
MTBE	10 ug/l	10 ug/l

N A = not applicable

[1] The benzene limits for discharge to Class A surface waters are applicable for water bodies capable of 7:1 dilution ratio of base flow to discharge flow. The Division of Water may be consulted for assistance as needed

Appendix D

Treatment System Schematic Diagram

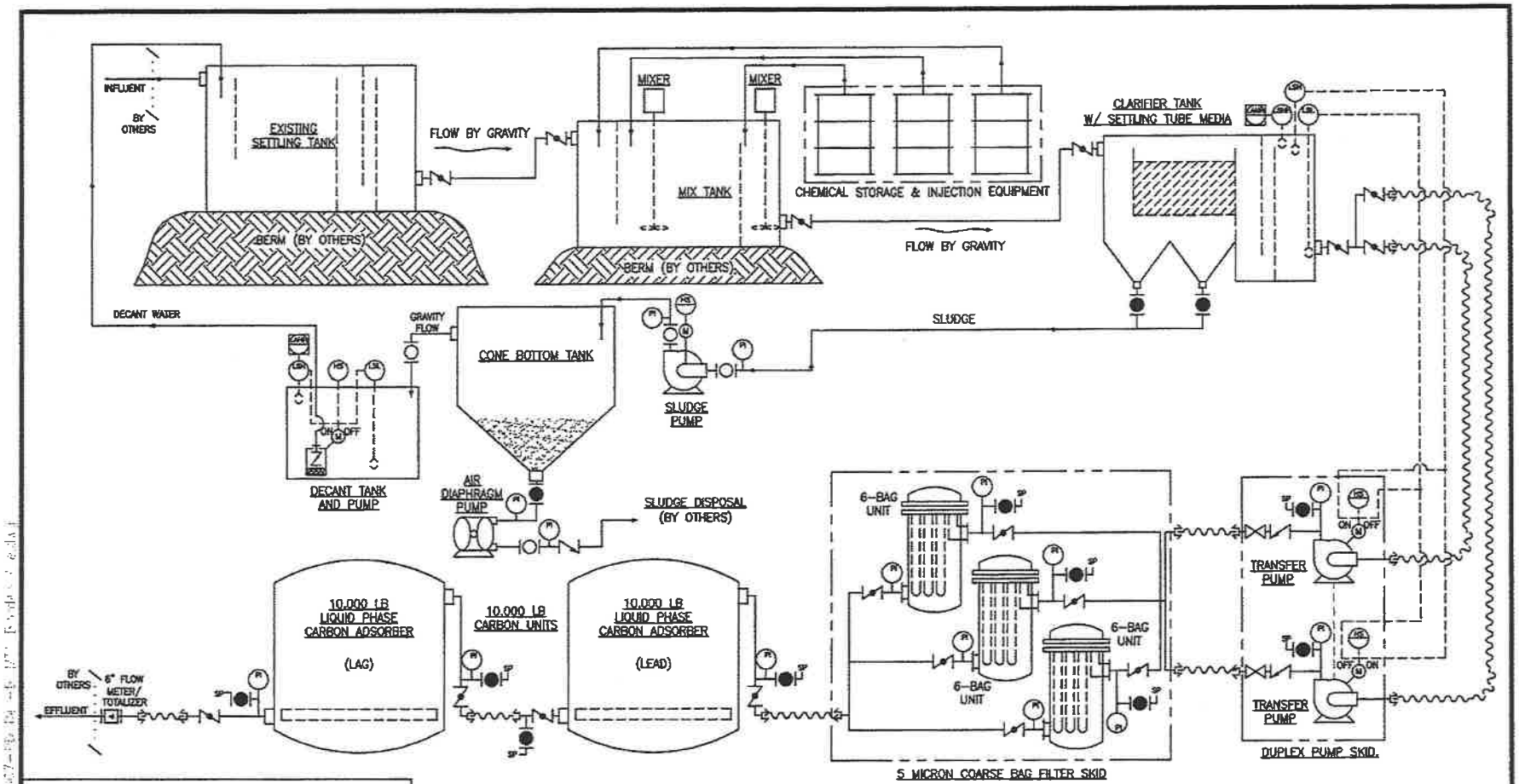

LEGEND

- PROCESS PIPING
- FLEXIBLE HOSE
- FLOW DIRECTION
- PIPE CROSS OVER
- LEVEL FLOAT
- MOTOR
- FLOW METER
- BALL VALVE (NORMALLY CLOSE)
- BUTTERFLY VALVE
- CHECK VALVE
- GATE VALVE (OPEN)
- SP SAMPLE PORT
- CAM LOCK COUPLING
- PRESSURE GAGE
- LEVEL ALARM HIGH HIGH
- LEVEL SWITCH HIGH
- LEVEL SWITCH HIGH HIGH
- LEVEL SWITCH LOW
- HAND OPERATED SWITCH

Appendix D - Treatment System Schematic

THIS DRAWING IS THE PROPERTY OF GROUND/WATER TREATMENT & TECHNOLOGY, INC.

NOTES:
1) MAXIMUM FLOWRATE = 600 GPM
2) SYSTEM FOOTPRINT APPROX. 10' X 100' + 20' X 50'
3) NOT ALL VALVES, INSTRUMENTATION AND PIPING, ETC. SHOWN FOR CLARITY.
4) GENERATOR BY GWTT. - 460V, 3 PHASE, 100 AMPS.

NO.	REVISIONS	DATE
B	PRELIMINARY DESIGN FOR REVIEW	07/02/09

MTA BORDEN AVE
BROOKLYN, NY

600 GPM PROPOSED TEMPORARY WATER TREATMENT SYSTEM

SCALE:	NTS	APPROVED BY:	JB	DRAWN BY:	AAV
DATE:	06/30/09				

GROUND/WATER TREATMENT & TECHNOLOGY
P.O. BOX 1174
DENVILLE, NJ 07834

DWG SIZE:	A	SHEET:	1 OF 1	DRAWING NUMBER:	14-1607-PD	B

Appendix E

Sediment and Sludge Waste Disposal Manifests and Truck Weigh Tickets

Appendix F

Summary Table of Waste Shipments

APPENDIX D
WASTE SHIPMENT SUMMARY
BORDEN AVENUE BRIDGE SITE

Month/Year	Date	Clean Earth Manifest No.	Weigh Ticket No.	Weight in Tons
December-09	12/16/09	378151	307000095407	29.48
		378152	307000095424	30.82
		378157	307000095477	27.09
		378158	307000095472	35.80
		378159	307000095342	25.74
		378160	307000095327	26.42
	12/17/09	378161	307000095569	28.02
		378162	307000095520	28.73
		378164	307000095720	28.07
		378165	307000095713	31.33
		378166	307000095684	29.97
		378167	307000095645	30.18
		378168	307000095629	29.81
		378169	307000095519	27.54
		378170	307000095646	31.89
		378171	307000095721	26.49
		378172	307000095512	30.89
	12/18/09	378153	307000095738	30.14
		378154	307000095816	28.97
		378155	307000095801	29.86
		378156	307000095798	29.53
		378163	307000095819	32.22
		378244	307000095860	29.03
		378245	307000095863	30.98
		378255	307000095854	30.44
		378256	307000095839	30.55
	12/21/09	378246	307000095908	27.88
		378247	307000095909	27.34
		378248	307000095931	27.91
		378249	307000095933	29.29
		378251	307000095929	27.64
		378252	307000095926	24.66
		378253	307000095916	27.24
		378254	307000095903	26.32
		378257	307000095895	25.95
		378258	307000095899	24.05
		277633	307000095882	29.66
		277634	307000095883	27.99
		277637	307000095878	26.03
		277646	307000095877	30.57
		277652	307000095875	30.01
	12/22/09	378250	307000095959	31.94
		378324	307000095964	21.41
		378325	307000095965	20.65
		378326	307000095972	17.84
		378429	307000096193	30.88
	12/23/09	378338	307000096172	24.93
		378339	307000096136	27.29
	12/29/09	378424	307000096485	25.88
		378327	307000096584	27.56
		378328	307000096642	26.46
	12/30/09	378335	307000096719	31.77
		378337	307000096729	27.82
		378467	307000096724	26.02
		378468	307000096814	30.69
		378469	307000096876	33.59
		378470	307000096902	32.22
		378471	307000096903	29.36
		378475	307000096825	25.99
		378476	307000096780	31.77
	1/4/10	378472	307000096953	25.84
		378473	307000096955	28.87
		378474	307000096956	28.88
		378425	307000097037	31.46
		378426	307000097000	28.84
		378427	307000097005	28.75
		378428	307000097001	28.66
		378333	307000097048	29.71
		378334	307000097045	31.15
	1/5/10	378580	307000097256	30.78
		378581	307000097267	29.68
		378582	307000097265	31.19
		378583	308000097322	30.19
		378584	307000097326	29.88
		378585	307000097327	27.87
		378587	307000097170	28.59
		378588	307000097181	28.16
		378589	307000097177	31.41
	1/6/10	369530	307000097387	35.67
		369531	307000097390	30.64
		369637	307000097476	34.25
		369638	307000097477	32.25
		369639	307000097538	31.86
		369640	307000097531	35.88

APPENDIX D
WASTE SHIPMENT SUMMARY
BORDEN AVENUE BRIDGE SITE

Month/Year	Date	Clean Earth Manifest No.	Weigh Ticket No.	Weight in Tons
February-10	2/19/10	377328	307000104441	28.52
		377329	307000104523	29.82
		377330	307000104567	30.17
Mar-10	3/29/10	277649	307000109108	29.63
		277650	307000109143	32.86
		277651	307000109060	28.56
		277654	307000109100	25.92
		238925	307000109149	30.73
Apr-10	4/5/10	293556	307000109745	29.06
		370767	307000109746	29.23
		402767	307000109832	29.30
		402766	307000109840	30.68
		402763	307000109907	27.65
		402764	307000109915	28.40
		402765	307000109922	28.65
	4/6/10	370761	307000110226	33.96
		402758	307000110213	36.07
		402759	307000110118	35.47
		402760	307000110014	28.79
		402761	307000110015	27.20
		402762	307000110130	30.54
	4/7/10	370762	307000110327	28.65
		370764	307000110448	28.50
		404148	307000110571	34.15
	4/8/10	402911	307000110766	29.81
		402912	307000110706	27.74
		402913	307000110642	28.28
	4/9/10	370763	307000110819	24.66
		402828	307000110882	30.18
		402829	307000110849	30.74
		403079	307000110847	26.74
		403080	307000110874	28.33
	4/12/10	402827	307000111078	29.66
		404149	307000110946	28.02
		404150	307000110947	27.42
		404632	307000111022	28.97
		404633	307000111023	30.62
		404634	307000111079	31.90
	4/13/10	404151	307000111165	31.14
		404152	307000111260	31.97
		404176	307000111331	33.89
	4/14/10	404781	307000111552	30.32
		404782	307000111560	31.01
		404783	307000111418	27.63
		404784	307000111421	27.96
		404785	307000111508	30.40
		404786	307000111497	28.94
	4/15/10	402801	307000111627	31.82
		402802	307000111710	30.10
		402806	307000111752	30.52
	4/16/10	402803	307000111907	34.72
		402804	307000111817	32.52
		402805	307000111872	35.05
	4/19/10	404930	307000112080	29.93
		404931	307000111981	28.78
		404929	307000112038	28.67
	4/21/10	404791	307000112351	30.20
		405052	307000112485	30.14
		405053	307000112553	32.95
	4/22/10	404178	307000112743	29.31
		404787	307000112833	29.59
		404788	307000112655	30.50
		404789	307000112754	32.71
		404790	307000112837	30.33
	4/23/10	404179	307000113016	29.30
		404180	307000112921	28.06
		405137	307000223060	27.96
	4/26/10	404172	307000113154	27.32
		404173	307000113197	27.44
		404174	307000113206	28.50
		405176	307000113397	33.56
	4/27/10	405177	307000113451	33.76
	4/28/10	404156	307000113556	20.02
		404157	307000113507	20.38
		404175	307000113597	9.35
August-10	8/12/10	424151	307000130762	10.93
	8/13/10	424148	307000131104	21.60
	8/16/10	424147	307000131362	6.45
	8/19/10	424150	307000132249	19.16
	8/25/10	424146	307000133215	16.24
	8/26/10	424145	307000133345	16.03
			Total Weight (tons)	7390.75

Kurre, John

From: Donald P. Hessemer <Donald.Hessemer@stvinc.com>
Sent: Thursday, April 07, 2011 4:08 PM
To: Kurre, John; Duran, Beatriz; Lotfi, Reza; Reddy, Kedari
Cc: Alan P. Marchan; Miguel A. Rodriguez; Haks,Jerry Liebowitz; harold palmer; Paul@maracapconstruction.com
Subject: Borden Ave Spill Case Closed
Attachments: Spill Case Closure 3-3-11 NYSDEC Spills Database.pdf

As mentioned in Tuesday's Project Progress meeting, after review of the Spill Closure Report, DEC closed out the Spill Case for Borden Avenue on March 3, 2011. Case Manager, Raphael Ketani informed me that "No Further action" letters are no longer issued for spills.

I have attached the DEC spills database printout as documentation for your files.

If you have any questions or comments, please contact me.

Don Hessemer, CHMM
Senior Project Manager
STV Incorporated
225 Park Avenue South
New York, NY 10003
(212) 614-3412 Direct Dial
(646) 654-1861 Fax
www.stvinc.com

Please consider the environment before printing this e-mail.

Visit us at our website: http://www.stvinc.com

The information contained in this electronic message is intended only for the use of the individual or entity to which it is addressed and may contain information that is privileged, confidential and exempt from disclosure under applicable law. If the reader of this message is not the intended recipient, you are informed that any dissemination, copying or disclosure of the material contained herein, in whole or in part, is strictly prohibited. If you have received this transmission in error, please notify STV and purge this message.

NEW YORK STATE
DEPARTMENT OF
ENVIRONMENTAL CONSERVATION

Spill Incidents Database Search Details

Spill Record

Administrative Information

DEC Region: 2
Spill Number: 0903437

Spill Date/Time

Spill Date: 06/23/2009 **Spill Time:** 01:25:00 PM
Call Received Date: 06/23/2009 **Call Received Time:** 01:25:00 PM

Location

Spill Name: NYC DOT BORDEN AVENUE BRIDGE
Address: BORDEN AVE & 7TH ST
City: LONG ISLAND CITY **County:** Queens

Spill Description

Material Spilled	Amount Spilled	Resource Affected
#6 Fuel Oil	UNKNOWN	Soil , Groundwater , Surface Water

Cause: Other
Source: Commercial/Industrial
Waterbody: DUTCH KILLS

Record Close

Date Spill Closed: 03/03/2011

"Date Spill Closed" means the date the spill case was closed by the case manager in the Department of Environmental Conservation (the Department). The spill case was closed because either; a) the records and data submitted indicate that the necessary cleanup and removal actions have been completed and no further remedial activities are necessary, or b) the case was closed for administrative reasons (e.g., multiple reports of a single spill consolidated into a single spill number). The Department however reserves the right to require additional remedial work in relation to the spill, if in the future it determines that further action is necessary.

If you have questions about this reported incident, please contact the Regional Office where the incident occurred.

Refine Current Search

New York State Department of Environmental Conservation
Division of Environmental Permits, Region 2
47-40 21ST Street, Long Island City, NY 11101-5407
Phone: (718) 482-4997 • **FAX:** (718) 482-4975
Website: www.dec.state.ny.us

Alexander B. Grannis
Commissioner

February 12, 2009

Michael V. Tumulty
STV Incorporated
225 Park Avenue South
New York, NY 10003

Re: NYSDEC Permit No. 2-6304-01440/00004
NYC Dept. Of Transportation
Borden Avenue Bridge over Dutch Kills
Borden Avenue between 27th Street & Review Avenue
Queens, New York
6NYCRR Part 608 - Water Quality Certification
NYCRR Part 661 - Tidal Wetlands
ECL Article 15 - Protection of Waters
NOTICE OF PERMIT ISSUANCE

Dear Mr. Tumulty:

Enclosed is your permit. Please read it carefully. Compliance with all permit conditions is required.

Please note that:

a. Natural Resource Permit Condition 3 requires submission of a mitigation plan within 90 days of permit issuance.

b. Natural Resource Permit Condition 4 requires identification of construction option within 1 week of bridge inspection.

c. Natural Resource Permit Condition 5 requires submission of the attached Notice of Intent to Commence Work at least 5 days prior to beginning work authorized by the permit.

Technical questions concerning the permit should be directed to Jesselynne Krief in the NYSDEC Bureau of Marine Resources at 718 482-6464. Administrative questions should be directed to Tammy Greco in the NYSDEC Division of Environmental Permits at 718 482-4997.

Sincerely,

Harold J. Dickey
Deputy Regional Permit Administrator

cc: NYC Dept. Of Transportation
NYSDEC Marine Resources
NYSDEC Law Enforcement

NEW YORK STATE DEPARTMENT OF ENVIRONMENTAL CONSERVATION
Facility DEC ID 2-6304-01440

PERMIT

Under the Environmental Conservation Law (ECL)

Permittee and Facility Information

Permit Issued To:
NYC DEPT OF TRANSPORTATION
40 WORTH ST 11TH FL
NEW YORK, NY 10003
(212) 676-0557

Facility:
NYC DOT - BORDEN AVE BRIDGE
BORDEN AVE BTWN 25TH & 27TH ST
LONG ISLAND CITY, NY 11101

Facility Location: in QUEENS COUNTY **Village:** Long Island City
Facility Principal Reference Point: NYTM-E: 589.262 NYTM-N: 4510.311
Latitude: 41°44'20.1" Longitude: 74°56'34.1"
Project Location: South of Long Island Expressway between 27th Street & Review Avenue
Authorized Activity: Repair/replacement west bridge abutment.

Permit Authorizations

Tidal Wetlands - Under Article 25
Permit ID 2-6304-01440/00004
New Permit Effective Date: 2/12/2009 Expiration Date: 12/31/2010
Water Quality Certification - Under Section 401 - Clean Water Act
Permit ID 2-6304-01440/00005
New Permit Effective Date: 2/12/2009 Expiration Date: 12/31/2010
Excavation & Fill in Navigable Waters - Under Article 15, Title 5
Permit ID 2-6304-01440/00006
New Permit Effective Date: 2/12/2009 Expiration Date: 12/31/2010

NYSDEC Approval

By acceptance of this permit, the permittee agrees that the permit is contingent upon strict compliance with the ECL, all applicable regulations, and all conditions included as part of this permit.

Permit Administrator: JOHN F CRYAN, Regional Permit Administrator
Address: NYSDEC REGION 2 HEADQUARTERS
47-40 21ST ST
LONG ISLAND CITY, NY 11101 -5407

Authorized Signature: John F. Cryan Date 02/12/09

Permit Components

NEW YORK STATE DEPARTMENT OF ENVIRONMENTAL CONSERVATION
Facility DEC ID 2-6304-01440

NATURAL RESOURCE PERMIT CONDITIONS

WATER QUALITY CERTIFICATION SPECIFIC CONDITION

GENERAL CONDITIONS, APPLY TO ALL AUTHORIZED PERMITS

NOTIFICATION OF OTHER PERMITTEE OBLIGATIONS

NATURAL RESOURCE PERMIT CONDITIONS - Apply to the Following Permits: TIDAL WETLANDS; WATER QUALITY CERTIFICATION; EXCAVATION & FILL IN NAVIGABLE WATERS

1. **Conformance With Plans** All activities authorized by this permit must be in strict conformance with the approved plans submitted by the applicant or applicant's agent as part of the permit application. Such approved plans were prepared by Ground/Water Treatment and Technology entitled: ¿50 Yard Roll-Off Settling Tank Standard Equipment Specification¿, Sheet 1 of 1, dated October 6, 2008, rec¿d by NYSDEC on February 5, 2009..

2. **Conformance with Plans - Addenda** In addition to plans referenced in the Condition titled "Conformance with Plans," the activities authorized by this permit must be in strict conformance with the following approved plans and/or submissions made as part of the permit application:

If Option 1 (Repair) is employed:

Plans prepared by STV Incorporated for the City of New York Department of Transportation Division of Bridges contract no. HBQ1162E entitled:

a) "Emergency Reconstruction of West Abutment and Wingwalls of Borden Avenue Bridge over Dutch Kills", SHEETS 8, 9, 38, 42R, 43, 44, 45, and 46 dated January 16, 2009, received by NYS DEC on February 5, 2009.

b) "Emergency Reconstruction of West Abutment and Wingwalls of Borden Avenue Bridge over Dutch Kills", SHEET 39, dated January 29, 2009, received by NYS DEC on February 5, 2009.

c) "Emergency Reconstruction of West Abutment and Wingwalls of Borden Avenue Bridge over Dutch Kills", SHEET 61, dated January 16, 2009, received by NYS DEC on January 26, 2009.

If Option 2 (Replacement) is employed:

a) "Emergency Reconstruction of West Abutment and Wingwalls of Borden Avenue Bridge over Dutch Kills", SHEETS 8, 67, 78, 82, 83, and 88 dated January 16, 2009, received by NYS DEC on February 5, 2009.

b) "Emergency Reconstruction of West Abutment and Wingwalls of Borden Avenue Bridge over Dutch Kills", SHEET 71, dated January 29, 2009, received by NYS DEC on February 5, 2009.

c) "Emergency Reconstruction of West Abutment and Wingwalls of Borden Avenue Bridge over Dutch Kills", SHEETS 72 an 75, dated January 16, 2009, received by NYS DEC on February 6, 2009.

3. **Mitigation Plan** Within ninety (90) days of permit issuance, Permittee must submit for review and approval a proposed Mitigation Plan Permittee that allows for the removal of approximately 50 cubic yards of debris from the Dutch Kills shoreline to: NYSDEC Bureau of Marine Resources, 47-40 21st Street, Long Island City, New York 11101 (Attention: Jesselynne Krief).

The Mitigation Plan must include a location, a detailed description of the project, and a time schedule for the mitigation project. The Mitigation Plan must be of sufficient detail and substance that it can be accepted by NYSDEC with minimal revision. Within two (2) weeks of receiving comments to the proposed Mitigation Plan, Permittee must submit a revised proposed Mitigation Plan incorporating DEC's comments: Upon approval of the proposed Mitigation Plan Permittee must complete the Mitigation Plan pursuant to the approved schedule or, if no schedule is approved, without delay. Please contact Jesselynne Krief in the NYSDEC Bureau of Marine Resources at (718) 482-6464 if you have any questions concerning the Mitigation Plan.

4. **Notification of Construction Option** Within (1) one week of the completion of the inspection of the bridge abutment timber pile support structure, Permittee must provide an inspection report and written notification indicating which of the two approved construction methods (replacement or repair) will be employed to: NYSDEC Bureau of Marine Resources, 47-40 21st Street, Long Island City, New York 11101 (Attention: Jesselynne Krief).

5. **Notice of Intent to Commence Work** At least five (5) days prior to commencement of the permitted activity, Permittee must complete and submit the attached "Notice of Intent to Commence Work" to NYSDEC Bureau of Marine Resources, 47-40 21st Street, Long Island City, New York 11101 (Attention: Jesselynne Krief).

6. **Post Construction Photographs** Post-construction photographs of the work area must be submitted to the NYSDEC Bureau of Marine Resources, 47-40 21st Street, Long Island City, New York 11101 (Attention: Jesselynne Krief) within 30 days of the completion of work.

7. **Post Permit Sign** The permit sign enclosed with this permit shall be posted in a conspicuous location on the worksite and adequately protected from the weather.

8. **Best Management Practices** Best management practices must be employed to prevent the loss of construction materials, debris, and sediment from entering the waterways. Such practices may include, but are not limited to silt fencing, hay bales, and floating booms. At minimum a floating boom with attached silt curtain must be installed encircling the entire project site for both the preliminary inspection of the relieving platform and for the duration of the project.

9. **Precautions Against Contamination of Waters** All necessary precautions shall be taken to preclude contamination of any wetland or waterway by suspended solids, sediments, fuels, solvents, lubricants, epoxy coatings, paints, concrete, leachate or any other environmentally deleterious materials associated with the project.

10. **Discharges to Tidal Wetlands Prohibited** There must be no discharge of runoff or other effluent over or through any abutment wall or shoreline stabilization structure or into any tidal wetland or tidal wetlands adjacent area unless specifically authorized by this permit.

11. **Concrete / Leachate Discharges Prohibited** During construction, concrete or leachate must not escape or be discharged, nor will washings from transit mix trucks, mixers, or other devices enter tidal wetlands and or protected buffer areas.

12. **Excavate Backfill Prior to Removal of Abutment** Prior to any construction or removal of the abutment and other shoreline stabilization structures all backfill must be excavated landward of the abutment and retained so as not to enter the waterway, tidal wetland or protected buffer area.

13. **Construct Abutment Prior to Fill Placement** Reconstruction or repair of the west abutment wall must be completed prior to placement of any fill material behind this structure.

14. **Install Cofferdam & Sheeting Protection Prior to Excavation** All cofferdams and protective sheeting functioning as the seaward project boundaries must be installed prior to excavation and removal of existing structures and fill immediately landward of such structures.

15. **Weep Holes Prohibited** The construction of weep holes in the abutment wall is strictly prohibited.

16. **Equipment Operation Below High Water Pohibited** Equipment operation below apparent high water is strictly prohibited.

17. **Storage of Construction Equipment and Materials** The storage of construction equipment and materials must be confined to within the project work site and or upland areas greater than 35 linear feet from the tidal wetland boundary.

18. **Disposal of Excavated Material** All dredged /excavated material must be disposed on an approved upland site and be retained so as to not re-enter any water body, tidal wetland, or protected buffer area. Excavated sediments will be placed directly into the approved disposal site or conveyance vehicle. The sidecasting (double dipping) or temporary storage of excavated material is prohibited.

19. **Debris Removal** Should any demolition or construction debris fall into the waterway or enter the tidal wetlands, it must be removed immediately.

20. **Debris Disposal** All demolition and construction debris must be properly disposed of at a licensed facility.

21. **Removal of Debris and Excess Material** Any debris or excess material from construction of this project will be completely removed from the adjacent area (upland) and removed to an approved upland area for disposal. No debris is permitted in tidal wetlands or tidal wetlands adjacent area or protected buffer areas.

22. **Clean Fill Material Only** All fill material must consist of "clean" sand, gravel, or soil. The use of material such as asphalt, slag, fly-ash, recycled concrete aggregate (RCA), broken concrete, or demolition debris is strictly prohibited.

23. **Containment of Disturbed Soils** All disturbed areas where soil will be temporarily exposed or stockpiled for longer than one (1) week will be contained by a continuous line of staked hay bales/silt curtain (or other NYSDEC approved method) placed on the seaward side between the fill and wetland or protected buffer area. Tarps are authorized to supplement these approved methods.

24. **No Interference With Navigation** There shall be no unreasonable interference with navigation by the work herein authorized.

25. **Minimize Adverse Impacts to Wetlands, Wildlife, Water** All work must be performed in a manner which minimizes adverse impacts to wetlands, wildlife, water quality and natural resources.

26. **Prior Approval of Changes** If the Permittee desires to make any changes in construction

techniques, species to be planted, the site plan, any mitigation plan, scheduling or staging of construction, or any other aspect of this project, the Permittee shall submit a written request to the Regional Permit Administrator to make such proposed changes and shall not make such changes unless authorized in writing by the Department.

27. **Failure to Meet Permit Conditions** Failure of the permittee to meet all the conditions of this permit is a violation of this permit and grounds for an order to immediately cease the permitted activity at the project site.

28. **State May Require Site Restoration** If upon the expiration or revocation of this permit, the project hereby authorized has not been completed, the applicant shall, without expense to the State, and to such extent and in such time and manner as the Department of Environmental Conservation may require, remove all or any portion of the uncompleted structure or fill and restore the site to its former condition. No claim shall be made against the State of New York on account of any such removal or alteration.

29. **State May Order Removal or Alteration of Work** If future operations by the State of New York require an alteration in the position of the structure or work herein authorized, or if, in the opinion of the Department of Environmental Conservation it shall cause unreasonable obstruction to the free navigation of said waters or flood flows or endanger the health, safety or welfare of the people of the State, or cause loss or destruction of the natural resources of the State, the owner may be ordered by the Department to remove or alter the structural work, obstructions, or hazards caused thereby without expense to the State, and if, upon the expiration or revocation of this permit, the structure, fill, excavation, or other modification of the watercourse hereby authorized shall not be completed, the owners, shall, without expense to the State, and to such extent and in such time and manner as the Department of Environmental Conservation may require, remove all or any portion of the uncompleted structure or fill and restore to its former condition the navigable and flood capacity of the watercourse. No claim shall be made against the State of New York on account of any such removal or alteration.

30. **State Not Liable for Damage** The State of New York shall in no case be liable for any damage or injury to the structure or work herein authorized which may be caused by or result from future operations undertaken by the State for the conservation or improvement of navigation, or for other purposes, and no claim or right to compensation shall accrue from any such damage.

WATER QUALITY CERTIFICATION SPECIFIC CONDITIONS

1. **Water Quality Certification** The NYS Department of Environmental Conservation hereby certifies that the subject project will not contravene effluent limitations or other limitations or standards under Sections 301, 302, 303, 306 and 307 of the Clean Water Act of 1977 (PL 95-217) provided that all of the conditions listed herein are met.

GENERAL CONDITIONS - Apply to ALL Authorized Permits:

1. **Facility Inspection by The Department** The permitted site or facility, including relevant records, is subject to inspection at reasonable hours and intervals by an authorized representative of the Department of Environmental Conservation (the Department) to determine whether the permittee is complying with this permit and the ECL. Such representative may order the work suspended pursuant to ECL 71- 0301

and SAPA 401(3).

The permittee shall provide a person to accompany the Department's representative during an inspection to the permit area when requested by the Department.

A copy of this permit, including all referenced maps, drawings and special conditions, must be available for inspection by the Department at all times at the project site or facility. Failure to produce a copy of the permit upon request by a Department representative is a violation of this permit.

2. **Relationship of this Permit to Other Department Orders and Determinations** Unless expressly provided for by the Department, issuance of this permit does not modify, supersede or rescind any order or determination previously issued by the Department or any of the terms, conditions or requirements contained in such order or determination.

3. **Applications For Permit Renewals, Modifications or Transfers** The permittee must submit a separate written application to the Department for permit renewal, modification or transfer of this permit. Such application must include any forms or supplemental information the Department requires. Any renewal, modification or transfer granted by the Department must be in writing. Submission of applications for permit renewal, modification or transfer are to be submitted to:

Regional Permit Administrator
NYSDEC REGION 2 HEADQUARTERS
47-40 21ST ST
LONG ISLAND CITY, NY11101 -5407

4. **Submission of Renewal Application** The permittee must submit a renewal application at least 30 days before permit expiration for the following permit authorizations: Tidal Wetlands, Water Quality Certification, Excavation & Fill in Navigable Waters.

5. **Permit Modifications, Suspensions and Revocations by the Department** The Department reserves the right to modify, suspend or revoke this permit. The grounds for modification, suspension or revocation include:

a. materially false or inaccurate statements in the permit application or supporting papers;

b. failure by the permittee to comply with any terms or conditions of the permit;

c. exceeding the scope of the project as described in the permit application;

d. newly discovered material information or a material change in environmental conditions, relevant technology or applicable law or regulations since the issuance of the existing permit;

e. noncompliance with previously issued permit conditions, orders of the commissioner, any provisions of the Environmental Conservation Law or regulations of the Department related to the permitted activity.

6. **Permit Transfer** Permits are transferrable unless specifically prohibited by statute, regulation or another permit condition. Applications for permit transfer should be submitted prior to actual transfer of ownership.

NEW YORK STATE DEPARTMENT OF ENVIRONMENTAL CONSERVATION
Facility DEC ID 2-6304-01440

NOTIFICATION OF OTHER PERMITTEE OBLIGATIONS

Item A: Permittee Accepts Legal Responsibility and Agrees to Indemnification
The permittee, excepting state or federal agencies, expressly agrees to indemnify and hold harmless the Department of Environmental Conservation of the State of New York, its representatives, employees, and agents ("DEC") for all claims, suits, actions, and damages, to the extent attributable to the permittee's acts or omissions in connection with the permittee's undertaking of activities in connection with, or operation and maintenance of, the facility or facilities authorized by the permit whether in compliance or not in compliance with the terms and conditions of the permit. This indemnification does not extend to any claims, suits, actions, or damages to the extent attributable to DEC's own negligent or intentional acts or omissions, or to any claims, suits, or actions naming the DEC and arising under Article 78 of the New York Civil Practice Laws and Rules or any citizen suit or civil rights provision under federal or state laws.

Item B: Permittee's Contractors to Comply with Permit
The permittee is responsible for informing its independent contractors, employees, agents and assigns of their responsibility to comply with this permit, including all special conditions while acting as the permittee's agent with respect to the permitted activities, and such persons shall be subject to the same sanctions for violations of the Environmental Conservation Law as those prescribed for the permittee.

Item C: Permittee Responsible for Obtaining Other Required Permits
The permittee is responsible for obtaining any other permits, approvals, lands, easements and rights-of-way that may be required to carry out the activities that are authorized by this permit.

Item D: No Right to Trespass or Interfere with Riparian Rights
This permit does not convey to the permittee any right to trespass upon the lands or interfere with the riparian rights of others in order to perform the permitted work nor does it authorize the impairment of any rights, title, or interest in real or personal property held or vested in a person not a party to the permit.

NOTICE OF INTENT TO COMMENCE WORK

Date: _____

NYSDEC Marine Resources
Attn. Jesselynne Krief
N.Y.S.D.E.C Region 2 Office
47-40 21st Street
Long Island City, N.Y. 11101

Re: NYSDEC Permit No. 2-6304-01440/00004
NYC Dept. Of Transporation
Borden Avenue Bridge over Dutch Kills
Borden Avenue between 27th Street & Review Avenue
Queens, New York

Dear Ms. Krief:

In accordance with Natural Resource Condition 5 of the referenced permit, I hereby serve notice to commence work on _____, 200____.

This is also to certify that, having read this entire permit, I am fully aware of and understand the general and special conditions therein, and agree to comply with all such conditions further understand that prior to undertaking any modification to the subject work, I must seek and receive written approval of the NYSDEC Regional Permit Administrator.

_____
Signature of Permittee

_____
Name of Permittee (please print)

_____
Signature of Contractor

_____
Name of Contractor (please print)

_____
Street Address of Contractor

_____
City, State, & Zip Code of Contractor

_____
Telephone Number of Contractor

WARNING

The permittee and his contractor (if any) are required to follow all permit conditions. Violations of the permit may lead to legal action, including the imposition of substantial monetary fines and corrective work.

cc: Environmental Permits

95-20-1 (11/03) -9d

New York State
Department of Environmental Conservation

NOTICE

The Department of Environmental Conservation (DEC) has issued permit(s) pursuant to the Environmental Conservation Law for work being conducted at this site. For further information regarding the nature and extent of the approved work and any Department conditions applied to the approval, contact the Regional Permit Administrator listed below. Please refer to the permit number shown when contacting the DEC.

Permit Number 2-6302-01440/00004

Expiration Date December 31, 2010

Regional Permit Administrator

John F. Cryan
47-40 21st Street
Long Island City, New York 11101
(718) 482-4997

NOTE: This notice is NOT a permit

010/010

New York State Department of Environmental Conservation
Division of Environmental Permits, Region 2
47-40 21ST Street, Long Island City, NY 11101-5407
Phone: (718) 482-4997 • **FAX:** (718) 482-4975
Website: www.dec.state.ny.us

Alexander B. Grannis
Commissioner

April 2, 2009

Alan P. Marchan, P.E.
STV Incorporated
225 Park Avenue South
New York, NY 10003

Re: NYSDEC Permit No. 2-6304-01440/00004
NYC Dept. Of Transportation
Borden Avenue Bridge over Dutch Kills
Borden Avenue between 27th Street & Review Avenue
Queens, New York
6NYCRR Part 608 - Water Quality Certification
NYCRR Part 661 - Tidal Wetlands
ECL Article 15 - Protection of Waters
NOTICE OF PERMIT MODIFICATION

Dear Mr. Marchan:

In response to your request, please be advised that the above referenced permit has been modified to provide clarification of the conditions contained in the previously issued permit.

Technical questions concerning the permit should be directed to Jesselynne Krief in the NYSDEC Bureau of Marine Resources at 718 482-6464. Administrative questions should be directed to Tammy Greco in the NYSDEC Division of Environmental Permits at 718 482-4997.

Sincerely,

Harold J. Dickey
Deputy Regional Permit Administrator

cc: NYC Dept. Of Transportation
NYSDEC Marine Resources
NYSDEC Law Enforcement

NEW YORK STATE DEPARTMENT OF ENVIRONMENTAL CONSERVATION
Facility DEC ID 2-6304-01440

PERMIT

Under the Environmental Conservation Law (ECL)

Permittee and Facility Information

Permit Issued To:
NYC DEPT OF TRANSPORTATION
40 WORTH ST 11TH FL
NEW YORK, NY 10003
(212) 676-0557

Facility:
NYC DOT - BORDEN AVE BRIDGE
BORDEN AVE BTWN 25TH & 27TH ST
LONG ISLAND CITY, NY 11101

Facility Location: in QUEENS COUNTY **Village:** Long Island City
Facility Principal Reference Point: NYTM-E: 589,262 NYTM-N: 4510.311
Latitude: 41°44'20.1" Longitude: 74°56'34.1"
Project Location: South of Long Island Expressway between 27th Street & Review Avenue
Authorized Activity: Repair / replace west bridge abutment.

Permit Authorizations

Tidal Wetlands - Under Article 25
Permit ID 2-6304-01440/00004

New Permit	Effective Date: 2/12/2009	Expiration Date: 12/31/2010
Modification # 1	Effective Date: 4/2/2009	Expiration Date: 12/31/2010

Water Quality Certification - Under Section 401 - Clean Water Act
Permit ID 2-6304-01440/00005

New Permit	Effective Date: 2/12/2009	Expiration Date: 12/31/2010
Modification # 1	Effective Date: 4/2/2009	Expiration Date: 12/31/2010

Excavation & Fill in Navigable Waters - Under Article 15, Title 5
Permit ID 2-6304-01440/00006

New Permit	Effective Date: 2/12/2009	Expiration Date: 12/31/2010
Modification # 1	Effective Date: 4/2/2009	Expiration Date: 12/31/2010

NYSDEC Approval

By acceptance of this permit, the permittee agrees that the permit is contingent upon strict compliance with the ECL, all applicable regulations, and all conditions included as part of this permit.

Permit Administrator: JOHN F CRYAN, Regional Permit Administrator
Address: NYSDEC REGION 2 HEADQUARTERS
47-40 21ST ST
LONG ISLAND CITY, NY 11101 -5407

Authorized Signature: John J. Cryan Date 04/02/09

the proposed Mitigation Plan, Permittee must submit a revised proposed Mitigation Plan incorporating DEC's comments. Upon approval of the proposed Mitigation Plan Permittee must complete the Mitigation Plan pursuant to the approved schedule or, if no schedule is approved, without delay. Contact Jesselynne Krief in the NYSDEC Bureau of Marine Resources at (718) 482-6464 if you have any questions concerning the Mitigation Plan.

4. **Notification of Construction Option** Within (1) one week of the completion of the inspection of the bridge abutment timber pile support structure, Permittee must provide an inspection report and written notification stating which of the two approved construction methods (replacement or repair) will be employed to: NYSDEC Marine Resources, 47-40 21st Street, Long Island City, New York 11101 (Attention: Jesselynne Krief).

5. **Notice of Intent to Commence Work** At least five (5) days prior to commencement of the permitted activity, Permittee must complete and submit the attached "Notice of Intent to Commence Work" to NYSDEC Bureau of Marine Resources, 47-40 21st Street, Long Island City, New York 11101 (Attention: Jesselynne Krief).

6. **Post Permit Sign** The permit sign enclosed with this permit shall be posted in a conspicuous location on the worksite and adequately protected from the weather.

7. **Best Management Practices** Best management practices will be employed to prevent the loss of construction materials, debris, and sediment from entering the waterways. Such practices may include, but are not limited to silt fencing, hay bales, and floating booms. At minimum a floating boom with attached silt curtain must be installed encircling the entire project site for both the preliminary inspection of the relieving platform and for the duration of the project.

8. **Precautions Against Contamination of Waters** All necessary precautions shall be taken to preclude contamination of any wetland or waterway by suspended solids, sediments, fuels, solvents, lubricants, epoxy coatings, paints, concrete, leachate or any other environmentally deleterious materials associated with the project.

charge to Tidal Wetlands Prohibited There will be no discharge of runoff or other effluent over or through any abutment wall or shoreline stabilization structure or into any tidal wetland or tidal wetlands adjacent area (unless specifically authorized herein).

ncrete / Leachate Discharges Prohibited During construction, concrete or leachate must not escape or be discharged, nor will washings from transit mix trucks, mixers, or other devices enter tidal wetlands and or protected buffer areas.

11. **Excavate Backfill Prior to Removal of Abutment** Prior to any construction or removal of the abutment and other shoreline stabilization structures all backfill must be excavated landward of the abutment and retained so as not to enter the waterway, tidal wetland or protected buffer area.

nstruct Abutment Prior to Fill Placement Reconstruction or repair of the west abutment wall must be completed prior to placement of any fill material behind this structure.

13. **Installation of Cofferdam & Sheeting Protection Prior to Excavation** All cofferdams and protective sheeting functioning as the seaward project boundaries must be installed prior to excavation and removal of existing structures and fill immediately landward of such structures.

14. **Cofferdam Removal** Within (30) thirty days of the completion of the abutment wall reconstruction, all cofferdams and protective sheeting installed seaward of the abutment wall are temporary and must be pulled in their entirety.

15. **No Weep Holes** The construction of weep holes in the abutment wall is strictly prohibited.

16. **Discharge of Effluent Obtained Through Excavation of Material** The effluent discharged from the settling tank into Dutch Kills Creek must not contain a visible contrast to the receiving water. If the effluent bears a substantial visible contrast to the receiving waters, discharging must cease and the settling time must be lengthened or the decant water must be filtered so that no visible contrast is seen.

17. **No Equipment Below High Water** Equipment operation below apparent high water is strictly prohibited.

18. **Dewatering** All sediment removed from within the excavation area must be dewatered using the settling tank shown on project plans referenced in Natural Resource Permit Condition 2. All effluent must be discharged into areas of the Dutch Kills with water depths greater than 4 feet at mean low water.

19. **Storage of Construction Equipment & Materials** The storage of construction equipment and materials must be confined to within the project work site and or upland areas greater than 35 linear feet from the tidal wetland boundary and outside the area of excavation.

sposal of Excavated Material All dredged material must be disposed on an approved upland site and be retained so as to ot re-enter any water body, tidal wetland, or protected buffer area. Excavated sediments must be placed directly into the approved disposal site or conveyance vehicle. The sidecasting (double dipping) or temporary storage of excavated material is prohibited.

21. **Debris Removal**
Should any demolition or construction debris fall into the waterway or enter the tidal wetlands, it must be removed immediately.

22. **Debris Disposal** Any debris or excess material from construction of this project will be completely removed from the adjacent area (upland) and removed to an approved upland area for disposal. No debris is permitted in tidal wetlands or tidal wetlands adjacent area or protected buffer areas. All demolition and construction debris must be properly disposed of at a licensed facility.

23. Clean Fill Material Only All fill material must consist of "clean" sand, gravel, or soil. The use of material such as asphalt, slag, fly-ash, recycled concrete aggregate (RCA), broken concrete, or demolition debris is strictly prohibited.

ntainment of Disturbed Soils AAll disturAlllAll disturbed areas where soil will be temporarily exposed or stockpiled for longer than one (1) week will be contained by a continuous line of staked hay bales/silt curtain (or other NYSDEC approved method) placed on the seaward side between the fill and wetland or protected buffer area. Tarps are authorized to supplement these approved methods.

25. **No Interference With Navigation** There shall be no unreasonable interference with navigation by the work herein authorized.

26. **Prior Approval of Changes** If the Permittee desires to make any changes in construction techniques, species to be planted, the site plan, any mitigation plan, scheduling or staging of construction, or any other aspect of this project, the Permittee shall submit a written request to the

Regional Permit Administrator to make such proposed changes and shall not make such changes unless authorized in writing by the Department.

27. **Minimize Adverse Impacts to Wetlands, Wildlife, Water** All work must be performed in a manner which minimizes adverse impacts to wetlands, wildlife, water quality and natural resources.

28. **Failure to Meet Permit Conditions** Failure of the permittee to meet all the conditions of this permit is a violation of this permit and grounds for an order to immediately cease the permitted activity at the project site.

29. **State May Require Site Restoration** If upon the expiration or revocation of this permit, the project hereby authorized has not been completed, the applicant shall, without expense to the State, and to such extent and in such time and manner as the Department of Environmental Conservation may require, remove all or any portion of the uncompleted structure or fill and restore the site to its former condition. No claim shall be made against the State of New York on account of any such removal or alteration.

30. **State May Order Removal or Alteration of Work** If future operations by the State of New York require an alteration in the position of the structure or work herein authorized, or if, in the opinion of the Department of Environmental Conservation it shall cause unreasonable obstruction to the free navigation of said waters or flood flows or endanger the health, safety or welfare of the people of the State, or cause loss or destruction of the natural resources of the State, the owner may be ordered by the Department to remove or alter the structural work, obstructions, or hazards caused thereby without expense to the State, and if, upon the expiration or revocation of this permit, the structure, fill, excavation, or other modification of the watercourse hereby authorized shall not be completed, the owners, shall, without expense to the State, and to such extent and in such time and manner as the Department of Environmental Conservation may require, remove all or any portion of the uncompleted structure or fill and restore to its former condition the navigable and flood capacity of the watercourse. No claim shall be made against the State of New York on account of any such removal or alteration.

31. **State Not Liable for Damage** The State of New York shall in no case be liable for any damage or injury to the structure or work herein authorized which may be caused by or result from future operations undertaken by the State for the conservation or improvement of navigation, or for other purposes, and no claim or right to compensation shall accrue from any such damage.

WATER QUALITY CERTIFICATION SPECIFIC CONDITIONS

1. **Water Quality Certification** The NYS Department of Environmental Conservation hereby certifies that the subject project will not contravene effluent limitations or other limitations or standards under Sections 301, 302, 303, 306 and 307 of the Clean Water Act of 1977 (PL 95-217) provided that all of the conditions listed herein are met.

GENERAL CONDITIONS - Apply to ALL Authorized Permits:

1. **Facility Inspection by The Department** The permitted site or facility, including relevant records, is subject to inspection at reasonable hours and intervals by an authorized representative of the Department of Environmental Conservation (the Department) to determine whether the permittee is complying with

this permit and the ECL. Such representative may order the work suspended pursuant to ECL 71- 0301 and SAPA 401(3).

The permittee shall provide a person to accompany the Department's representative during an inspection to the permit area when requested by the Department.

A copy of this permit, including all referenced maps, drawings and special conditions, must be available for inspection by the Department at all times at the project site or facility. Failure to produce a copy of the permit upon request by a Department representative is a violation of this permit.

2. **Relationship of this Permit to Other Department Orders and Determinations** Unless expressly provided for by the Department, issuance of this permit does not modify, supersede or rescind any order or determination previously issued by the Department or any of the terms, conditions or requirements contained in such order or determination.

3. **Applications For Permit Renewals, Modifications or Transfers** The permittee must submit a separate written application to the Department for permit renewal, modification or transfer of this permit. Such application must include any forms or supplemental information the Department requires. Any renewal, modification or transfer granted by the Department must be in writing. Submission of applications for permit renewal, modification or transfer are to be submitted to:

Regional Permit Administrator
NYSDEC REGION 2 HEADQUARTERS
47-40 21ST ST
LONG ISLAND CITY, NY11101 -5407

4. **Submission of Renewal Application** The permittee must submit a renewal application at least 30 days before permit expiration for the following permit authorizations: Tidal Wetlands, Water Quality Certification, Excavation & Fill in Navigable Waters.

5. **Permit Modifications, Suspensions and Revocations by the Department** The Department reserves the right to modify, suspend or revoke this permit. The grounds for modification, suspension or revocation include:

a. materially false or inaccurate statements in the permit application or supporting papers;

b. failure by the permittee to comply with any terms or conditions of the permit;

c. exceeding the scope of the project as described in the permit application;

d. newly discovered material information or a material change in environmental conditions, relevant technology or applicable law or regulations since the issuance of the existing permit;

e. noncompliance with previously issued permit conditions, orders of the commissioner, any provisions of the Environmental Conservation Law or regulations of the Department related to the permitted activity.

6. **Permit Transfer** Permits are transferrable unless specifically prohibited by statute, regulation or another permit condition. Applications for permit transfer should be submitted prior to actual transfer of ownership.

NOTIFICATION OF OTHER PERMITTEE OBLIGATIONS

Item A: Permittee Accepts Legal Responsibility and Agrees to Indemnification
The permittee, excepting state or federal agencies, expressly agrees to indemnify and hold harmless the Department of Environmental Conservation of the State of New York, its representatives, employees, and agents ("DEC") for all claims, suits, actions, and damages, to the extent attributable to the permittee's acts or omissions in connection with the permittee's undertaking of activities in connection with, or operation and maintenance of, the facility or facilities authorized by the permit whether in compliance or not in compliance with the terms and conditions of the permit. This indemnification does not extend to any claims, suits, actions, or damages to the extent attributable to DEC's own negligent or intentional acts or omissions, or to any claims, suits, or actions naming the DEC and arising under Article 78 of the New York Civil Practice Laws and Rules or any citizen suit or civil rights provision under federal or state laws.

Item B: Permittee's Contractors to Comply with Permit
The permittee is responsible for informing its independent contractors, employees, agents and assigns of their responsibility to comply with this permit, including all special conditions while acting as the permittee's agent with respect to the permitted activities, and such persons shall be subject to the same sanctions for violations of the Environmental Conservation Law as those prescribed for the permittee.

Item C: Permittee Responsible for Obtaining Other Required Permits
The permittee is responsible for obtaining any other permits, approvals, lands, easements and rights-of-way that may be required to carry out the activities that are authorized by this permit.

Item D: No Right to Trespass or Interfere with Riparian Rights
This permit does not convey to the permittee any right to trespass upon the lands or interfere with the riparian rights of others in order to perform the permitted work nor does it authorize the impairment of any rights, title, or interest in real or personal property held or vested in a person not a party to the permit.

From: Regina Seetahal
To: Anthony Morenzi; Gail Hintz; Harold Dickey; John Cryan; Louis Oliva;...
Date: 4/7/2009
Time: 3:00 PM - 4:00 PM
Subject: Meeting on Coppola project
Place: R2 Conf Room

NOTICE OF INTENT TO COMMENCE WORK

Date: _____

NYSDEC Marine Resources
Attn. Jesselynne Krief
N.Y.S.D.E.C Region 2 Office
47-40 21st Street
Long Island City, N.Y. 11101

Re: NYSDEC Permit No. 2-6304-01440/00004
NYC Dept. Of Transporation
Borden Avenue Bridge over Dutch Kills
Borden Avenue between 27th Street & Review Avenue
Queens, New York

Dear Ms. Krief:

In accordance with Natural Resource Condition 5 of the referenced permit, I hereby serve notice to commence work on _____, 200____.

This is also to certify that, having read this entire permit, I am fully aware of and understand the general and special conditions therein, and agree to comply with all such conditions further understand that prior to undertaking any modification to the subject work, I must seek and receive written approval of the NYSDEC Regional Permit Administrator.

_____
Signature of Permittee

_____
Name of Permittee (please print)

_____
Signature of Contractor

_____
Name of Contractor (please print)

_____
Street Address of Contractor

_____
City, State, & Zip Code of Contractor

_____
Telephone Number of Contractor

WARNING

The permittee and his contractor (if any) are required to follow all permit conditions. Violations of the permit may lead to legal action, including the imposition of substantial monetary fines and corrective work.

cc: Environmental Permits

95-20-1 (11/03) –9d

New York State
Department of Environmental Conservation

NOTICE

The Department of Environmental Conservation (DEC) has issued permit(s) pursuant to the Environmental Conservation Law for work being conducted at this site. For further information regarding the nature and extent of the approved work and any Department conditions applied to the approval, contact the Regional Permit Administrator listed below. Please refer to the permit number shown when contacting the DEC.

Regional Permit Administrator

John F. Cryan
47-40 21st Street
Long Island City, New York 11101
(718) 482-4997

Permit Number **2-6302-01440/00004**

Expiration Date **December 31, 2010**

NOTE: This notice is **NOT** a permit

New York State Department of Environmental Conservation
Division of Environmental Permits, Region 2
47-40 21ST Street, Long Island City, NY 11101-5407
Phone: (718) 482-4997 • FAX: (718) 482-4975
Website: www.dec.state.ny.us

Alexander B. Grannis
Commissioner

May 22, 2009

Beatrice Duran
New York City Department of Transportation
Division of Bridges
2 Rector Street-7th Floor
New York, New York 10006

Re: NYSDEC Permit No. 2-6304-001440/00004
New York City Department of Transportation
Borden Avenue Bridge over Dutch Kills
Borden Avenue between 27th Street & Review Avenue
Queens, New York

Dear Ms. Duran:

It has come to the Department's attention that the proposed method of dewatering, as previously approved by the above referenced permit, has changed. NYSDEC is in receipt of a Long Island Well permit application submitted by Maracap Constructions Industries, Inc. on behalf on NYCDOT for dewatering of the same area through the installation of 12 wells.

The permit authorized the dewatering of excavated sediment through the use of a settling tank and the discharge of the related effluent into the Dutch Kills waterway at water depths greater than 4' at mean Low Water (MLW). The proposed well point dewatering will increase the flow rate of effluent entering the water body and may have additional impacts which were not considered previously.

Therefore, NYSDEC requests that within one (1) week of the receipt of this letter NYCDOT submit a formal request to modify the above referenced permit. The modification request must be accompanied by an application fee of $200 (see attached fee schedule).

If NYCDOT a fails to provide a request for permit modification within one (1) week of the receipt of this letter NYSDEC will initiate the permit modification in accordance with the provisions of 6NYCRR Part 621.14(a), for the following reasons;

1. Exceeding the scope of the project as described in the permit application;

The proposed method of dewatering has changed to incorporate the installation of 12 wells.

2. Failure by the permittee to comply with any terms or conditions of the permit.

The installation of Long Island wells was not approved by permit # 2-6304-01440/00004.

3. Newly discovered material information or material change in environmental conditions, relevant technology or applicable law or regulations since the issuance of the existing permit.

Long Island well permit application #2-6304-01440/00008 submitted by Maracap Construction Industries, Inc. on behalf of NYCDOT proposes to modify the previously authorized dewatering methods..

The Department acknowledges NYCDOT's urgent need for the proposed repairs and will review the modification request as expeditiously as possible.

Technical questions concerning this matter should be directed to Jesselynne Krief in the NYSDEC Bureau of Marine Resources at 718 482-6464. Administrative questions should be directed to Tammy Greco in the NYSDEC Division of Environmental Permits at 718 482-4997.

Sincerely,

John F. Cryan
Regional Permit Administrator

cc: George Klein, NYCDOT
Michael Tumulty, STV
John Aitkin, Maracap
Joe Mahon, Moretrench
Stephen A. Watts III, NYSDEC Permits

NOTICE TO ALL DEC PERMIT APPLICANTS REGARDING NEW PERMIT APPLICATION FEES FOR FRESHWATER AND TIDAL WETLANDS PERMITS EFFECTIVE APRIL 1, 2009

Please be advised that the NYS Legislature passed legislation amending Section 70-0117 of the Environmental Conservation Law (Uniform Procedures) to require application fees for certain regulated activities requiring a permit from the Department. Any applications received on or after April 1, 2009 will be subject to the following fee schedule for each application, as applicable, before the Department can issue a permit decision.

Freshwater Wetlands Permits (ECL Article 24)

- Minor projects (go to http://www.dec.ny.gov/permits/6275.html) $50
- Modifications to Permits. $50
- Residential projects defined as associated with one single family dwelling and customary appurtenances thereto $50
- Multiple family dwellings and customary appurtenances thereto $100
- Other projects $200

Tidal Wetlands Permits (ECL Article 25)

- Minor projects (go to http://www.dec.ny.gov/permits/6355.html) $200
- Modifications to Permits $200
- Other projects $900

No cash or credit cards may be used for payment at this time. Only checks or money orders will be accepted, made payable to the New York State Department of Environmental Conservation (NYSDEC). The cancelled check will be your receipt. Please file your payment with your permit application. There are no provisions for partial or full refund once you file an application, regardless of project changes or permit decision. If you have any questions regarding these requirements, please contact the Environmental Permits Unit in any DEC regional office (go to http://www.dec.ny.gov/about/39381.html). Thank you for your cooperation.

STV

September 8, 2009

Mr. Harold J. Dickey
NYS Department of Environmental Conservation
Division of Environmental Permits, Region 2
47-40 21st Street
Long Island City
New York, NY 11101

Reference: **Emergency Reconstruction of West Abutment and Wingwalls Borden Avenue Bridge over Dutch Kills, NYCDOT Contract HBQ1162E**
NYSDEC Permit ID-2-6304-01440/00004/00005/00006

Subject: Request for Permit Modification

Dear Mr. Dickey:

On behalf of the NYC Department of Transportation (NYCDOT), STV Inc. requests that the above referenced permits be modified. NYCDOT and its consultant and contractors have had a series of technical discussions and meetings, both on and off site, with Ms. Jesselynne Krief of NYSDEC's Bureau of Marine Services concerning the emergency bridge repair. This request for permit modification is to formally respond to Ms. Krief's comments and field observations regarding potential impacts to the shoreline and water way and to provide engineering plans that supplement and, in some cases, supersede plans submitted with the initial Permit Application which was approved on February 12, 2009, and the Notice of Permit Modification issued on April 2, 2009.

The original permit application was submitted and approved prior to the selection of one of two bridge repair options which were being considered by the NYCDOT. The alternative selection that offered the best long term solution could not be made until detailed inspections of the abutment wall and wingwalls were subsequently performed. As a result of the decision to proceed with full replacement of the bridge's western abutment and its wing walls and subsequent discovery of petroleum-impacted sediment and water during excavation and dewatering, construction modifications and systems for handling and treatment of impacted sediment and water have been evaluated and designed. The following paragraphs address modifications to plans for activities that may have potential impacts to the shoreline and water way and identify the attached plans that support the modifications.

It is noted that many of plans have been previously submitted to the NYSDEC Spills Division in a Corrective Action Plan (CAP) to address Spill Case No. 0903437 at the site. The CAP was approved by the NYSDEC Division of Marine Resources and the Bureau of Spill Prevention Response on August 31, 2009.

Item 1: Outfall Pipe to the Dutch Kills

During removal of the southwest wing wall, an existing storm sewer outfall was destroyed. In order to provide a discharge outlet for the project's dewatering operation, a 12-inch temporary sewer pipe was installed, beginning at the Borden Avenue regulator chamber and routed for discharge to an outflow position into the Dutch Kills adjacent to the southwestern most cofferdam. As communicated to Mr. John F. Cryan, NYSDEC Regional Permit Administrator, in a letter dated May 29, 2009, effluent from the outflow pipe was discharged in a manner designed to minimize the potential for suspending bottom sediments and increasing turbidity. This was accomplished by placing a small (4 ft. by 4 ft.) temporary platform approximately 0.5 to 1.0 ft. below the invert of the discharge pipe. The platform was secured to the existing shoring will be removed when the dewatering

AN EMPLOYEE-OWNED COMPANY PROVIDING QUALITY SERVICE SINCE 1912 | 225 PARK AVENUE SOUTH
NEW YORK, NEW YORK 10003-1604
(212) 777-4400 FAX: (212) 529-5237

operations are completed. The platform was constructed with 1 in. by 6 in. members across the top, spaced approximately 1 to 2 inches apart to dissipate energy from the discharged water.

In addition, it was necessary to remove several feet of debris and fill material from adjacent to the shoreline and trench the piping from the chamber to the shoreline to allow gravity flow of the effluent to the discharge point. This outfall will now be sued to discharge treated effluent from the dewatering operation.

- Temporary Outflow – Baffle Plan and Detail - Depicts the discharge outfall to the Dutch Kills in plan and section view with details of the baffle platform

- Outflow Pipe and Flume Details – Depicts details of the flume connection of the inlet for the treated wastewater discharge to the discharge pipe

Item 2: Extension of the Outside Edges of the Cofferdam

The original construction sequence for the western wing walls and abutment included a smaller cofferdam, a large concrete tremie and underwater demolition. The design was changed when underwater demolition was eliminated and an alternate plan was developed to use well points to pump water from within the cofferdam prior to construction. A new and larger cofferdam was designed to allow sufficient space to install the well points and allow work to proceed. In addition, diagonal/bracing struts were installed within the cofferdam to strengthen the cofferdam perimeter while dewatering was being performed. The actual layout changed slightly to agree with updated survey data and to ensure clearing of all existing and proposed battered piles.

- Temporary Outflow – Baffle Plan and Detail - This surveyed drawling also shows the full extent of the outside edges of the cofferdam that protrude into the Dutch Kills.

Item 3: Temporary Pontoon Bridge

The Borden Avenue Bridge is currently in a retraced position during emergency repairs. During the initial emergency repair activities a floating pontoon bridge was constructed across the Dutch Kills from the western embankment to access equipment staged on the east side of the bridge. Access stairs are attached at each end with lockable gates and the walkway can swing out of the Dutch Kills as required to allow marine traffic.

- General Plan – Proposed Option 2 – Shows the temporary timber pontoon bridge located to the north of the northern end of the cofferdam

- Temporary Floating Walkway During Construction Schematic – Provides construction details and notes

Item 4: Design Modifications to the Western Bridge Abutment and Wingwalls

The original abutment and wing walls were designed as gravity walls; therefore they were fairly massive in size. The failure of the south west wing wall was due to this concept; the wall began to slide on top of the timber platform. In order to avoid this problem and also to make a stronger, code abiding abutment/wing wall a new system based on piles was chosen. This design allowed the size of the abutment/walls to be much smaller and also provided a far superior slide resistance. It was for these economic and functional advantages that the abutment and wing walls were redesigned as shown on the following plans.

- Construction Staging Area Section 5 – Shows cross sections of the Wingwall and Abutment Structures keyed into elevations.

- Backfill Sections – Shows cross sections of the backfill to be placed behind the abutment and wing wall of the western side of the bridge.

Item 4: Temporary Sediment Staging Area

Excavated stream sediment will be stored in a nearby lot beneath the Long Island Expressway (LIE)/495 viaduct at 27th Street and 51st Avenue (approximately 500 feet north of the project site). The lot is leased by the NYCDOT from the City of New York. The use of this additional work area is necessary to allow the temporary staging of excavated material generated during around the clock dewatering and excavation operations.

The sediment staging area will be cleared of vegetation prior to placement of filter fabric and 6- mil poly sheeting. A minimum of a 6- inch thick slab will be placed on top of the poly and filter fabric. The concrete slab will be surrounded with 6-inch curbing. Concrete jersey barriers, interlocked with additional poly placed over them to the ground will be placed adjacent to curbing. Hay bales will be placed as an additional layer of containment along the perimeter of the area (fence line).

The 6- inch minimum concrete slab will be sloped to collect water from the excavated sediment into a NYC Type II Precast Catch Basin with a precast top and a C.I drain inlet. The precast top will be set 6" below the top of the new slab. The casting will then be set on top, backfilled all around, and the new concrete slab will be poured over the top of the precast cover and flush to the casting. If drained water accumulates in the basin, it will be pumped dry as necessary using either 55-gallon drums or a vacuum truck and transported to the on-site treatment system for treatment prior to discharge into the Dutch Kills.

Newly excavated sediment will be transported via a 20-cubic yard water-tight dump truck to the lot and placed in a conical pile within the containment to facilitate excess water runoff into the collection sump. Once this material has been determined to be sufficiently drained, it will be spread out for drying and mixing with kiln dust to await loading and off-site transport. The following attached figures provide plan and cross section details of the Sediment Staging Area.

- Temporary Sediment Staging Area Figure 3- Depicts a plan view of the Temporary Sediment Storage Area to be located to the north of the bridge site.

- Temporary Sediment Staging Area Sheet 2, Figure 3A – Depicts a cross section of the concrete pad and barriers as well as how an overhead tarp will be attached to existing bridge columns and bracing.

Item 5: Streambank Protection

At the time of the initial NYSDEC Permit Application submission, the engineering of appropriate stream bank protections measures (rip rap) had not been developed. The following plans detail the cross sections and extent

of engineering controls designed to protect the stream bank areas adjacent to the southwest and northeast wing walls to the western bridge abutment.

- Streambank Protection Plan – Provides a plan view of the extent of stream bank protection to the northern and southern ends of the wingwalls
- Stream Embankment 1 – Shows a cross section of proposed streambank protection on the north side of the bridge. Protection consists of new stone riprap atop geotech fiber bedding. Drawing notes describe construction details.
- Stream Embankment 2 – Shows a cross section of the proposed streambank protection measures on the south side of the bridge

Item 6: East Side Bridge Work

Construction activity to the east side of the bridge includes changes of construction sequence, pile jacketing, repair to the breastwork and structural repair to the bridge span with Class A Containment for painting, and concrete deck replacement.

We trust this information sufficiently supports our request for permit modification. If you have any questions or additional comments, please contact Mr. Donald Hessemer or Mr. Alan Marchan at 212-777-4400.

Sincerely,
STV, Incorporated

Donald P. Hessemer
Environmental Project Manager

Alan P. Marchan, P.E.
Project Manager

cc: Jesselynne Krief, NYSDEC, Bureau of Marine Services
Raphael Ketani, NYSDEC Bureau of Spill Prevention and Response
George Klein, NYCDOT
Kedari Reddy, NYCDOT
Beatriz Duran, NYCDOT
John Kurre, NYCDOT

Attachments: Temporary Outflow Baffle Plan and Detail
Outflow Pipe and Flume Details
General Plan – Proposed Option 2
Temporary Floating Walkway during Construction Schematic
Construction Staging Area Section 5

Backfill Sections
Temporary Sediment Staging Area – Figure 3
Temporary Sediment Staging Area Sheet 2, Figure 3A
Streambank Protection Plan
Stream Embankment 1
Stream Embankment 2

10/13/2009

New York State Department of Environmental Conservation
Notice of Incomplete Application - This is NOT a Permit

Application ID: 2-6304-01440/00004

Batch Number: 614606

→ G. Klein
J. Kurre

Facility: NYC DOT - BORDEN AVE BRIDGE
BORDEN AVE BTWN 25TH & 27TH ST
LONG ISLAND CITY, NY 11101

Applicant: NYC DEPT OF TRANSPORTATION
40 WORTH ST 11TH FL
NEW YORK, NY 10003

Owner ID: 19237

2009 OCT 14 A 8:59
D/C-BRIDGES

Permit(s) Applied for: 1 - Article 25 Tidal Wetlands
1 - Section 401 - Clean Water Act Water Quality Certification
1 - Article 15 Title 5 Excavation & Fill in Navigable Waters

Project Location: in QUEENS in QUEENS COUNTY

Your application for Permit is incomplete. The following items are required:

1. As previously requested, NYSDEC requires the revision of permitted drawings to reflect the currently proposed conditions. Three (3) full size scalable copies of each revised plan must be submitted. Please include the datum cited wherever MHW/MLW is shown. All changes to the previously permitted design must be incorporated; at minimum the following revisions must be made;

a. Sheet 8 - include existing shoreline conditions, and location of MHW/MLW for the south west shoreline.

b. Sheet 67 - include existing shoreline conditions, and location of MHW/MLW for the south west, and limits for the staging areas proposed at the east abutment.

c. Sheet 78- No revisions are necessary to this plan as long as the previously approved design is still proposed.

d. Sheet 72- No revisions are necessary to this plan as long as the previously approved design is still proposed.

e. Sheet 75- No revisions are necessary to this plan as long as the previously approved design is still proposed.

f. Sheet 82- This plan must be updated to show an accurate distance between the abutment face and the steel sheet pile, as well as the current limit of excavation. All distances provided must show either the maximum extent or provide a range for max and min distances from the abutment.

g. Sheet 83- revisions submitted 9/10/09 see additional required revisions as per items 2 and 3 below).

h. Sheet 88- revisions submitted 9/10/09 see additional required revisions as per items 2 and 3 below).

i. Sheet 71- This plan must be revised to show the current location of the cofferdam/braces; include existing shoreline conditions and the location of MHW/MLW for the southwest shoreline intersecting with the west bridge abutment. This plan should also show the location of all well points installed for the dewatering operation.

The following additional details are still required.

i. An elevation for the replacement of the pile dolphins. The detail must provide measurements for the size and type of the piles installed, as well as how perforation of the impermeable membrane installed to isolate the remaining oil laden sediment will be prevented.

ii. A cross sectional detail indicating how the float bridges/stairs intersect with both the east and west shorelines. Two details may be submitted if necessary. The cross sectional details should be oriented as if looking perpendicular to the float bridges/stairs and should include any gates proposed.

2. NYSDEC requests the following revisions to the plans submitted by STV which accompanied the modification request dated September 9, 2009. Three (3) full size scalable copies of each revised plan must be submitted.

a. Sheet 88- Please remove note 4. All fill landward of the cofferdam must be placed prior to removal of the cofferdam. This plan must be updated to show an accurate distance between the abutment face and the steel sheet pile, as well as the current limit of excavation. All distances provided must show either the maximum extent or provide a range for max and min distances from the abutment. Please provide the size of the rounded river bed stone to be used as fill. Additional revisions requested by Spills are listed in question 3.

b.Sheet 83- Please verify that the location of Section C and Section D are still the locations indicated by the permitted sheet 71 and that the location of MHW/MLW and the mud line are accurate. This plan must be updated to show an accurate distance between the abutment face and the steel sheet pile, as well as the current limit of excavation. All distances provided must show either the maximum extent or provide a range for max and min distances from the abutment. This plan must also show the backfill between the abutment face and the cofferdam and any liner proposed. Additional revisions requested by Spills are listed in question 3.

c. Temporary Floating Walkway During Construction Schematic- Please provide a unique sheet number for this plan. All information on this plan must be drawn to scale. The plan should indicate where and how the safety boat will be moored as well as the limits of the staging area. What type and size of safety boat will be employed? What materials will be stored in the staging area? How will the floating walkway be moved into the open/closed positions? Will the floating walkway be left in the waterway when construction is not active? If so, will it be left in the open or closed position? Will the floating bridge be utilized for the duration of the construction activities?

d. Figure 2- Please provide a unique sheet number for this plan. Please provide the scale used for the plan and both sections. What datum are the elevations provided in?

e. Figure 2A- Please provide a unique sheet number for this plan.

f. Figure 3- Please provide a unique sheet number for this plan. An earlier version of this plan was inadvertently included with the modification request. The submitted version must be updated to show hay bales/silt fencing continuing around the north east corner of the staging

area, as well as the location of the shoreline and MHW/MLW. Note #5 should include a time frame and description of the restoration activities for the site (ie: Within 6 months from the completion of excavation activities the area will be returned to the original grade. Any excavation shall be filled using clean natural fill.)

g. Figure 3A- Please provide a unique sheet number for this plan.

h. Sheet 67R (General Plan-Proposed Option 2) – All information provided by this plan appears to duplicate information more clearly provided on other plans, with the exception of BMP's. If this is the case, this plan may be omitted from the resubmission. However please be advised appropriate BMP's must be employed for the duration of the construction and dewatering activities. Best management practices such as the use of a floating boom/silt curtains, hay bales and silt fencing etc. must be employed where appropriate to minimize the impacts associated with cleanup and construction.

Stabilization Plans

i. Sheet 67R (Streambank Protection – Plan) – Please provide a unique sheet number for this plan. The plan should be revised to show the completed project conditions prior to the stabilization work, existing contours for both the north and south shorelines, location of MHW/MLW, limits for the stabilization activities, and lot boundaries. Any proposed changes to the toe of slope or location of MHW/MLW should be removed. In addition to this plan existing and proposed grading plans, and a photo plan for each area of stabilization must be submitted. Grading plans must show property boundaries and how the proposed stabilization will intersect with the bridge abutment and existing shoreline. Additional cross sections should be provided for each stabilization area. The proposed shoreline stabilization must result in a shoreline that is no further seaward that the existing shoreline. If a slope of 2:1 is desired, a design similar to that proposed by the plan entitled Stream Embankment 1, which pulls the shoreline landward should be considered.

ii. Stream Embankment 1- Please provide a unique sheet number for this plans. All notes which allow for deviation from the approved plans must be removed.

iii. Stream Embankment 2- Please provide a unique sheet number for this plan. The currently proposed design results in the placement of fill in both Littoral Zone and Adjacent Area. Please revise the design so that the proposed slope is no further seaward than the existing slope, resulting in a net fill of zero. Existing contours do not indicate a sidewalk/road. Does the current design propose the seaward relocation of the existing sidewalk/road?

iv. Stream Embankment 1 and 2- Additional detail are required for the rip-rap design. Please provide the following on all plans where rip-rap is proposed: size of the bedding stone and depth of the bedding layer, location of geotextile fabric proposed, minimum capstone size and depth of the capstone layer, size of the toe stone.

3. The NYSDEC Marine Resources Program has some concerns regarding the proposed method of containment for residual oil contamination within the project boundary. The proposed method of containment must be shown on revised sheets 88 and 83. The NYSDEC Spills requires that the following information be included on these plans so that it may be determined whether or not the proposed method of containment is adequate.

a. Thickness and type of liner proposed. The liner should be a minimum of 60 mils thick and manufacturer's specs should be attached.

b. Thickness and type of cushion layer above and below the liner. The thickness of the cushioning layers should be in accordance with the point loads over the liner. Clean sand would be a good material to be used for the cushioning layer.

c. The plans must clearly indicate how a "blow out" of the leading edge of the liner, where it meets the mud line of the Dutch Kills, will be prevented? If the liner should open up, then the pressure of the weight of the sediment may mobilize the residual oil. This oil will rise to the surface of the Dutch Kills and be an intermittent or continuous seep that will be difficult to stop.

4. Written permission from adjacent property owners for any work including the shoreline stabilization work completed on adjacent lots not owned by DOT must be provided. Possible affected properties are Queens County Block 112 Lot 1 and Queens County Block 68 Lot 9.

5. Through discussion with STV it has come to the NYSDEC's Marine Resources Program's attention that the in water work (ie. pile jacketing etc.) on the east bridge abutment is no longer proposed. All repairs proposed will take place landward of the east abutment. Please confirm that this is the case and provide a detailed description of the remaining work proposed to the east abutment.

Technical questions concerning this matter should be directed to Jesselynne Krief in the NYSDEC Bureau of Marine Resources at 718 482-6464. Administrative questions should be directed to the contact person listed below.

Please submit requested information by _____
No further action can be taken until all of these materials are received.

Signature:

Date: October 13, 2009

Contact Person:
TAMARA A GRECO
NYSDEC
47-40 21ST ST
LONG ISLAND CITY, NY 11101

Telephone Number: (718) 482-4997

N.Y.S. DEPARTMENT OF ENVIRONMENTAL CONSERVATION
NYSDEC REGION 2 HEADQUARTERS
47-40 21ST ST
LONG ISLAND CITY NY 11101
(718) 482-4997

SAVE THE TOP HALF OF THIS FORM FOR YOUR RECORDS AND RETURN THE BOTTOM HALF WHEN PROVIDING THE INFORMATION REQUESTED ON THE ACCOMPANYING **NOTICE OF INCOMPLETE APPLICATION.**

YOUR DOING SO WILL HELP US EXPEDITE YOUR PERMIT PROCESSING. THANK YOU.

DEC Contact:	TAMARA A GRECO
Batch ID:	614606
Application ID:	2-6304-01440/00004
Owner ID:	19237
Date Received:	06/01/2009
Date Incomplete:	10/13/2009
Application Type:	MOD
Applicant Name:	NYC DEPT OF TRANSPORTATION
Facility Name:	NYC DOT - BORDEN AVE BRIDGE
Project Desc:	Modification to dewatering operation

PLEASE PROVIDE REQUESTED INFORMATION ON OR BEFORE:

SAVE THIS PART !

DETACH

N.Y.S. DEPARTMENT OF ENVIRONMENTAL CONSERVATION

NYSDEC REGION 2 HEADQUARTERS

DEC Contact:	TAMARA A GRECO
Batch Id:	614606
Application Id:	2-6304-01440/00004
Owner Id:	19237
Date Received:	06/01/2009
Date Incomplete:	10/13/2009
Application Type:	MOD
Applicant Name:	NYC DEPT OF TRANSPORTATION
Facility name:	NYC DOT - BORDEN AVE BRIDGE
Project Desc:	Modification to dewatering operation
Information Due On Or Before:	

PLEASE ATTACH THIS HALF SO IT IS DISPLAYED PROMINENTLY ON YOUR RESUBMISSION

RETURN THIS PART !

RETURN THIS HALF OF THIS FORM WHEN PROVIDING THE INFORMATION REQUESTED ON THE ACCOMPANYING

NOTICE OF INCOMPLETE APPLICATION.

New York State Department of Environmental Conservation
Division of Environmental Permits, Region 2
47-40 21ST Street, Long Island City, NY 11101-5407
Phone: (718) 482-4997 • **FAX:** (718) 482-4975
Website: www.dec.state.ny.us

Alexander B. Grannis
Commissioner

November 19, 2009

Alan P. Marchan, P.E.
STV Incorporated
225 Park Avenue South
New York, NY 10003

Re: NYSDEC Permit No. 2-6304-01440/00004
NYC Dept. Of Transportation
Borden Avenue Bridge over Dutch Kills
Borden Avenue between 27th Street & Review Avenue
Queens, New York
6NYCRR Part 608 - Water Quality Certification
NYCRR Part 661 - Tidal Wetlands
ECL Article 15 - Protection of Waters
NOTICE OF PERMIT MODIFICATION

Dear Mr. Marchan:

In response to your request, please be advised that the above referenced permit has been modified to refelect dewatering methods. Your modified permit is attached.

If you have any technical questions concerning the permit please contact Jesselynne Krief in the NYSDEC Bureau of Marine Resources at 718 482-6464. Administrative questions should be directed to Tammy Greco in the NYSDEC Division of Environmental Permits at 718 482-4997.

Sincerely,

Harold J. Dickey
Deputy Regional Permit Administrator

cc: NYC Dept. Of Transportation
NYSDEC Marine Resources
NYSDEC Law Enforcement

NEW YORK STATE DEPARTMENT OF ENVIRONMENTAL CONSERVATION
Facility DEC ID 2-6304-01440

PERMIT

Under the Environmental Conservation Law (ECL)

Permittee and Facility Information

Permit Issued To:
NYC DEPT OF TRANSPORTATION
40 WORTH ST 11TH FL
NEW YORK, NY 10003
(212) 676-0557

Facility:
NYC DOT - BORDEN AVE BRIDGE
BORDEN AVE BTWN 25TH & 27TH ST
LONG ISLAND CITY, NY 11101

Facility Location: in QUEENS COUNTY **Village:** Long Island City
Facility Principal Reference Point: NYTM-E: 589.262 NYTM-N: 4510.311
Latitude: 41°44'20.1" Longitude: 74°56'34.1"
Project Location: Repair / replace west bridge abutment.
Authorized Activity: Repair / replace west bridge abutment.

Permit Authorizations

Tidal Wetlands - Under Article 25
Permit ID 2-6304-01440/00004

New Permit	Effective Date: 2/12/2009	Expiration Date: 12/31/2010
Modification # 1	Effective Date: 4/2/2009	Expiration Date: 12/31/2010
Modification # 2	Effective Date: 11/19/2009	Expiration Date: 12/31/2010

Water Quality Certification - Under Section 401 - Clean Water Act
Permit ID 2-6304-01440/00005

New Permit	Effective Date: 2/12/2009	Expiration Date: 12/31/2010
Modification # 1	Effective Date: 4/2/2009	Expiration Date: 12/31/2010
Modification # 2	Effective Date: 11/19/2009	Expiration Date: 12/31/2010

Excavation & Fill in Navigable Waters - Under Article 15, Title 5
Permit ID 2-6304-01440/00006

New Permit	Effective Date: 2/12/2009	Expiration Date: 12/31/2010
Modification # 1	Effective Date: 4/2/2009	Expiration Date: 12/31/2010
Modification # 2	Effective Date: 11/19/2009	Expiration Date: 12/31/2010

NYSDEC Approval

By acceptance of this permit, the permittee agrees that the permit is contingent upon strict compliance with the ECL, all applicable regulations, and all conditions included as part of this permit.

Permit Administrator: JOHN F CRYAN, Regional Permit Administrator
Address: NYSDEC REGION 2 HEADQUARTERS
47-40 21ST ST
LONG ISLAND CITY, NY 11101 -5407

Authorized Signature: _____ Date 11/19/09

Permit Components

NATURAL RESOURCE PERMIT CONDITIONS

WATER QUALITY CERTIFICATION SPECIFIC CONDITION

GENERAL CONDITIONS, APPLY TO ALL AUTHORIZED PERMITS

NOTIFICATION OF OTHER PERMITTEE OBLIGATIONS

NATURAL RESOURCE PERMIT CONDITIONS - Apply to the Following Permits: TIDAL WETLANDS; WATER QUALITY CERTIFICATION; EXCAVATION & FILL IN NAVIGABLE WATERS

1. **Conformance With Plans** All activities authorized by this permit must be in strict conformance with the approved plans submitted by the applicant or applicant's agent as part of the permit application. Such approved plans were prepared by STV Incorporated and Ground/Water Treatment & Technology for the City of New York Department of Transportation Division of Bridges.

2. **Conformance with Plans - Addenda** In addition to plans referenced in the Condition titled "Conformance with Plans," the activities authorized by this permit must be in strict conformance with the following approved plans and/or submissions made as part of the permit application:

a. Plans prepared by STV Incorporated for the City of New York Department of Transportation Division of Bridges contract no. HBQ1162E entitled: "Emergency Reconstruction of West Abutment and Wingwalls of Borden Avenue Bridge over Dutch Kills", SHEETS 8, 18, 67R, 71R, 72R, 75R, 78R, 82, 83, 88, 94R, 96, 97, 98, 99, and 103 dated Nov 20, 2009, received by NYS DEC on Nov 16, 2009.

The location of the Water treatment system and treatment system details must be consistent with the plans and information included in the CAP approved by DEC on August 31, 2009.

3. **Mitigation Plan** Permittee must provide a Mitigation Plan that allows for the removal of approximately 75 cubic yards of debris/material from the Dutch Kills shoreline as well as the stabilization of disturbed areas on either side of the replaced bridge abutment. The stabilization design must result in no increase of net fill in the waterway and a shoreline with a proposed slope no further seaward than the existing slope. Within ninety (90) days of permit issuance, the Permittee must submit for review and approval a proposed Mitigation Plan to NYSDEC Bureau of Marine Resources, 47-40 21st Street, Long Island City, New York 11101 (Attention: Jesse Krief). The Mitigation Plan must include a location, a detailed description of the project, and a time schedule for the mitigation project as well as permission from adjacent land owners for all work proposed on adjacent properties not owned by NYCDOT. The Mitigation Plan must be of sufficient detail and substance that it can be accepted by DEC with minimal revision. Within two (2) weeks of receiving comments to the proposed Mitigation Plan, Permittee must submit a revised proposed Mitigation Plan incorporating DEC's comments. Upon approval of the proposed Mitigation Plan Permittee must complete the Mitigation Plan pursuant to the

approved schedule or, if no schedule is approved, without delay. Permittee may contact Jesse Krief in the NYSDEC Bureau of Marine Resources at (718) 482-6464 with any questions concerning the Mitigation Plan.

4. **Removal of Temporary Structures** Within sixty (60) days of the completion of the abutment reconstruction activities all temporary structures installed to facilitate the reconstruction must be removed in their entirety. After removal is complete all areas must be restored to original grades using only clean/natural fill and stabilized. Temporary structures to be removed include the sediment staging area, the temporary flume, outfall pipe and baffle, temporary timber pontoon bridge and landings.

5. **HDPE Geomembrane Liner Requirements** Installation of a continuous 60 MIL HDPE geomembrane liner must be installed over all oil contaminated sediment within the cofferdam surrounding the bridge abutment, and on slopes that expose similarly oil contaminated sediment. A one (1) foot minimum cushioning layer must be installed on either side of the liner in order to prevent puncturing. All liner panels must be hot welded together with at least a six (6) inch overlap. All edges of the geomembrane panels adjacent to the bridge abutment must be sealed to the bridge abutment. All liner edges not adjacent to the abutment must be buried in an anchoring trench. Where space is limited and an anchoring trench is not possible liner edges must be left flat and carefully covered with backfill.

6. **Timber Fender Replacement** The replacement of the timber fender system is limited to areas where the fender existed prior to removal of the abutment and must be attached directly to the abutment face as shown on the project plans referenced in Natural Resources Permit Condition 2, specifically sheets 8, 18 and 94R.

7. **Notice of Intent to Commence Work** At least five (5) days prior to commencement of the permitted activity, Permittee must complete and submit the attached "Notice of Intent to Commence Work" to NYSDEC Bureau of Marine Resources, 47-40 21st Street, Long Island City, New York 11101 (Attention: Jesselynne Krief).

8. **Post Permit Sign** The permit sign enclosed with this permit shall be posted in a conspicuous location on the worksite and adequately protected from the weather.

9. **Post Construction Photographs** Within 30 days of the completion of work authorized by this permit, Permittee must provide post-construction photographs of the work area to: NYSDEC Bureau of Marine Resources, 47-40 21st Street, Long Island City, New York 11101 (Attention: Jesse Krief).

10. **Best Management Practices** Best management practices must be employed to prevent the loss of construction materials, debris, and sediment from entering the waterways. Such practices may include, but are not limited to silt fencing, hay bales, floating booms, and oil capture systems. At minimum a floating boom with attached silt curtain must be installed encircling the entire project site for both the preliminary inspection of the relieving platform and for the duration of the project.

11. **Precautions Against Contamination of Waters** All necessary precautions shall be taken to preclude contamination of any wetland or waterway by suspended solids, sediments, fuels, solvents, lubricants, epoxy coatings, paints, concrete, leachate or any other environmentally deleterious materials associated with the project.

12. **Discharge to Tidal Wetlands Prohibited** There must be no discharge of runoff or other effluent over or through any abutment wall or shoreline stabilization structure or into any tidal wetland or tidal wetlands adjacent area (unless specifically authorized by this permit).

13. **Water Treatment** All waters discharged into the Dutch Kills resulting from the dewatering activities associated with this project must first undergo treatment as described in the Corrective Action Plan approved by NYSDEC on August 31, 2009. The location of the treatment system must also remain consistent with the CAP. All effluent must be discharged into areas of the Dutch Kills with water depths greater than 4 feet at mean low water.

14. **Concrete/ Leachate Discharges Prohibited** During construction, concrete or leachate must not escape or be discharged. Washings from transit mix trucks, mixers, or other devices must not enter tidal wetlands and or protected buffer areas.

15. **Excavate Backfill Prior to Removal of Abutment** Prior to any construction or removal of the abutment and other shoreline stabilization structures all backfill must be excavated landward of the abutment and retained so as not to enter the waterway, tidal wetland or protected buffer area.

16. **Construct Abutment Prior to Fill Placement** Reconstruction or repair of the west abutment wall must be completed prior to placement of any fill material on either side of this structure.

17. **Installation of Cofferdam & Sheeting Protection Prior to Excavation** All cofferdams and protective sheeting functioning as the seaward project boundaries must be installed prior to excavation and removal of existing structures and fill immediately landward of such structures.

18. **Cofferdam Removal** Within (30) of the completion of the abutment wall reconstruction, all cofferdams, protective sheeting and associated bracing structures installed seaward of the abutment wall must be pulled in their entirety.

19. **No Weep Holes** The construction of weep holes in the abutment wall is strictly prohibited.

20. **Discharge of Effluent Obtained Through Excavation of Material** The effluent discharged from the water treatment system into the Dutch Kills Creek must not contain a visible contrast to the receiving water. If the effluent bears a substantial visible contrast to the receiving waters, discharging must cease and the water must be reintroduced back into the head of the treatment system until no visible contrast is seen.

21. **No Equipment Below High Water** Equipment operation below apparent high water is strictly prohibited.

22. **Dewatering** All sediment removed from within the excavation area must be dewatered within the confines of the concrete pad located in the sediment staging area shown on project plans referenced in Natural Resource Permit Condition 2. All effluent must be transported to and incorporated into the treatment system.

23. **Storage of Construction Equipment & Materials** The storage of construction equipment and materials must be confined to within the project work site and or upland areas greater than 35 linear feet from the tidal wetland boundary and outside the area of excavation.

24. **Disposal of Excavated Material** All dredged material must be retained so as to not re-enter any water body, tidal wetland, or protected buffer area and be disposed of at an upland site approved to accept petroleum contaminated sediments. Excavated sediments from within the cofferdam area must be placed directly into a conveyance vehicle for transportation to the stockpile area. The sidecasting (double dipping) or temporary storage of excavated material is prohibited.

25. **Prohibited Treated Wood** Use of wood treated with creosote is prohibited; Wood treated with Pentachlorophenol (PCP) must not be used in wetlands or surface waters. Standard pressure treated lumber with CCA and its use is permitted.

26. **Use of wood Preservatives** Pressure treated wood used for construction of in-water structures must have been treated with a preservative and must have undergone a treatment process approved (stamped or otherwise marked as certified) by the American Wood Preservative Association.

Chromated Copper Arsenate (CCA) pressure treated wood must be clean and free of CCA surface deposits. Wood with surface deposits must be washed for at least 5 minutes under running water prior to use. (Note the following condition for the handling of wash water.)

Any wood debris such as sawdust or wash water must not enter any water body, including wetlands, or protected buffer areas. Field application of CCA is strictly prohibited.

27. **Debris Removal** Should any demolition or construction debris fall into the waterway or enter the tidal wetlands, it must be removed immediately.

28. **Debris Disposal** Any debris or excess material from construction of this project will be completely removed from the adjacent area (upland) and removed to an approved upland area for disposal. No debris is permitted in tidal wetlands or tidal wetlands adjacent area or protected buffer areas. All demolition and construction debris must be properly disposed of at a licensed facility.

29. Clean Fill Material Only All fill material must consist of "clean" sand, gravel, or soil. The use of material such as asphalt, slag, fly-ash, recycled concrete aggregate (RCA), broken concrete, or demolition debris is strictly prohibited.

30. **Containment of Disturbed Soils** All disturbed areas where soil will be temporarily exposed or stockpiled for longer than one (1) week must be contained by a continuous line of staked hay bales/silt curtain (or other NYSDEC approved method) placed on the seaward side between the fill and wetland or protected buffer area. Tarps are authorized to supplement these approved methods.

31. **No Interference With Navigation** There shall be no unreasonable interference with navigation by the work herein authorized.

32. **Prior Approval of Changes** If the Permittee desires to make any changes in construction techniques, species to be planted, the site plan, any mitigation plan, scheduling or staging of construction, or any other aspect of this project, the Permittee shall submit a written request to the Regional Permit Administrator to make such proposed changes and shall not make such changes unless authorized in writing by the Department.

33. **Minimize Adverse Impacts to Wetlands, Wildlife, Water** All work must be performed in a manner which minimizes adverse impacts to wetlands, wildlife, water quality and natural resources.

34. **Failure to Meet Permit Conditions** Failure of the permittee to meet all the conditions of this permit is a violation of this permit and grounds for an order to immediately cease the permitted activity at the project site.

35. **State May Require Site Restoration** If upon the expiration or revocation of this permit, the project hereby authorized has not been completed, the applicant shall, without expense to the State, and to such extent and in such time and manner as the Department of Environmental Conservation may

require, remove all or any portion of the uncompleted structure or fill and restore the site to its former condition. No claim shall be made against the State of New York on account of any such removal or alteration.

36. **State May Order Removal or Alteration of Work** If future operations by the State of New York require an alteration in the position of the structure or work herein authorized, or if, in the opinion of the Department of Environmental Conservation it shall cause unreasonable obstruction to the free navigation of said waters or flood flows or endanger the health, safety or welfare of the people of the State, or cause loss or destruction of the natural resources of the State, the owner may be ordered by the Department to remove or alter the structural work, obstructions, or hazards caused thereby without expense to the State, and if, upon the expiration or revocation of this permit, the structure, fill, excavation, or other modification of the watercourse hereby authorized shall not be completed, the owners, shall, without expense to the State, and to such extent and in such time and manner as the Department of Environmental Conservation may require, remove all or any portion of the uncompleted structure or fill and restore to its former condition the navigable and flood capacity of the watercourse. No claim shall be made against the State of New York on account of any such removal or alteration.

37. **State Not Liable for Damage** The State of New York shall in no case be liable for any damage or injury to the structure or work herein authorized which may be caused by or result from future operations undertaken by the State for the conservation or improvement of navigation, or for other purposes, and no claim or right to compensation shall accrue from any such damage.

WATER QUALITY CERTIFICATION SPECIFIC CONDITIONS

1. **Water Quality Certification** The NYS Department of Environmental Conservation hereby certifies that the subject project will not contravene effluent limitations or other limitations or standards under Sections 301, 302, 303, 306 and 307 of the Clean Water Act of 1977 (PL 95-217) provided that all of the conditions listed herein are met.

GENERAL CONDITIONS - Apply to ALL Authorized Permits:

1. **Facility Inspection by The Department** The permitted site or facility, including relevant records, is subject to inspection at reasonable hours and intervals by an authorized representative of the Department of Environmental Conservation (the Department) to determine whether the permittee is complying with this permit and the ECL. Such representative may order the work suspended pursuant to ECL 71-0301 and SAPA 401(3).

The permittee shall provide a person to accompany the Department's representative during an inspection to the permit area when requested by the Department.

A copy of this permit, including all referenced maps, drawings and special conditions, must be available for inspection by the Department at all times at the project site or facility. Failure to produce a copy of the permit upon request by a Department representative is a violation of this permit.

2. **Relationship of this Permit to Other Department Orders and Determinations** Unless expressly provided for by the Department, issuance of this permit does not modify, supersede or rescind any order or determination previously issued by the Department or any of the terms, conditions or requirements

contained in such order or determination.

3. **Applications For Permit Renewals, Modifications or Transfers** The permittee must submit a separate written application to the Department for permit renewal, modification or transfer of this permit. Such application must include any forms or supplemental information the Department requires. Any renewal, modification or transfer granted by the Department must be in writing. Submission of applications for permit renewal, modification or transfer are to be submitted to:

Regional Permit Administrator
NYSDEC REGION 2 HEADQUARTERS
47-40 21ST ST
LONG ISLAND CITY, NY11101 -5407

4. **Submission of Renewal Application** The permittee must submit a renewal application at least 30 days before permit expiration for the following permit authorizations: Excavation & Fill in Navigable Waters, Tidal Wetlands, Water Quality Certification.

5. **Permit Modifications, Suspensions and Revocations by the Department** The Department reserves the right to modify, suspend or revoke this permit. The grounds for modification, suspension or revocation include:

a. materially false or inaccurate statements in the permit application or supporting papers;

b. failure by the permittee to comply with any terms or conditions of the permit;

c. exceeding the scope of the project as described in the permit application;

d. newly discovered material information or a material change in environmental conditions, relevant technology or applicable law or regulations since the issuance of the existing permit;

e. noncompliance with previously issued permit conditions, orders of the commissioner, any provisions of the Environmental Conservation Law or regulations of the Department related to the permitted activity.

6. **Permit Transfer** Permits are transferrable unless specifically prohibited by statute, regulation or another permit condition. Applications for permit transfer should be submitted prior to actual transfer of ownership.

NOTIFICATION OF OTHER PERMITTEE OBLIGATIONS

Item A: Permittee Accepts Legal Responsibility and Agrees to Indemnification
The permittee, excepting state or federal agencies, expressly agrees to indemnify and hold harmless the Department of Environmental Conservation of the State of New York, its representatives, employees, and agents ("DEC") for all claims, suits, actions, and damages, to the extent attributable to the permittee's acts or omissions in connection with the permittee's undertaking of activities in connection with, or operation and maintenance of, the facility or facilities authorized by the permit whether in compliance or not in compliance with the terms and conditions of the permit. This indemnification does not extend to any claims, suits, actions, or damages to the extent attributable to DEC's own negligent or intentional acts or omissions, or to any claims, suits, or actions naming the DEC and arising under

Article 78 of the New York Civil Practice Laws and Rules or any citizen suit or civil rights provision under federal or state laws.

Item B: Permittee's Contractors to Comply with Permit
The permittee is responsible for informing its independent contractors, employees, agents and assigns of their responsibility to comply with this permit, including all special conditions while acting as the permittee's agent with respect to the permitted activities, and such persons shall be subject to the same sanctions for violations of the Environmental Conservation Law as those prescribed for the permittee.

Item C: Permittee Responsible for Obtaining Other Required Permits
The permittee is responsible for obtaining any other permits, approvals, lands, easements and rights-of-way that may be required to carry out the activities that are authorized by this permit.

Item D: No Right to Trespass or Interfere with Riparian Rights
This permit does not convey to the permittee any right to trespass upon the lands or interfere with the riparian rights of others in order to perform the permitted work nor does it authorize the impairment of any rights, title, or interest in real or personal property held or vested in a person not a party to the permit.

NOTICE OF INTENT TO COMMENCE WORK

Date: _____

NYSDEC Marine Resources
Attn. Jesse Krief
N.Y.S.D.E.C Region 2 Office
47-40 21st Street
Long Island City, N.Y. 11101

Re: NYSDEC Permit No. 2-6304-01440/00004
NYC Dept. Of Transportation
Borden Avenue bridge over Dutch Kills
Borden Avenue between 27th Street & Review Avenue
Queens, New York

Dear Ms. Krief:

In accordance with Natural Resource Condition 7 of the referenced permit, I hereby serve notice to commence work on _____, 200____.

This is also to certify that, having read this entire permit, I am fully aware of and understand the general and special conditions therein, and agree to comply with all such conditions. I further understand that prior to undertaking any modification to the subject work, I must seek and receive written approval of the NYSDEC Regional Permit Administrator.

_____
Signature of Permittee

_____
Name of Permittee (please print)

_____
Signature of Contractor

_____
Name of Contractor (please print)

_____
Street Address of Contractor

_____
City, State, & Zip Code of Contractor

_____
Telephone Number of Contractor

WARNING

The permittee and his contractor (if any) are required to follow all permit conditions. Violations of the permit may lead to legal action, including the imposition of substantial monetary fines and corrective work.

cc: NYSDEC Environmental Permits

95-20-1 (11/03) –9d

New York State
Department of Environmental Conservation

NOTICE

The Department of Environmental Conservation (DEC) has issued permit(s) pursuant to the Environmental Conservation Law for work being conducted at this site. For further information regarding the nature and extent of the approved work and any Department conditions applied to the approval, contact the Regional Permit Administrator listed below. Please refer to the permit number shown when contacting the DEC.

Permit Number 2-6302-01440/00004

Expiration Date December 31, 2010

Regional Permit Administrator

John F. Cryan
47-40 21st Street
Long Island City, New York 11101
(718) 482-4997

NOTE: This notice is NOT a permit

STV

December 7, 2009

Mr. Selvin T. Southwell, P.E
NYS Department of Environmental Conservation
47-40 21st Street
Long Island City, New York 11101

Reference: Emergency Reconstruction of West Abutment and Wingwalls Borden Avenue Bridge over Dutch Kills

Subject: Discharge Monitoring Plan
NYSDEC Permit No. 2-6304-01440/00004

Dear Mr. Southwell:

The New York City Department of Transportation (NYCDOT) is preparing to resume construction and repair activities at the Borden Avenue Bridge site. As you know, the project was placed on hold after the discovery of petroleum-impacted sediment during dewatering and excavation activities on the western side of the Dutch Kills.

The purpose of this letter is to serve as a Discharge Monitoring Plan to provide guidance in monitoring treated effluent at the above-referenced project site prior to discharge to the Dutch Kills.

Background

As a result of the discovery of petroleum-impacted sediment, Moretrench, under subcontract to Maracap, developed a Water Treatment Plan (dated July 23, 2009) as part of a Corrective Action Plan (CAP) which addresses the treatment of impacted groundwater from within the cofferdam and collected run off from the wet sediment stockpiles. The treatment design is based upon the water sampling data that was obtained by the project team on June 19, 2009. The groundwater table will be lowered and withdrawn from the cofferdam through a series of permitted wells from within the confines of the cofferdam and treated on site through a designed water treatment system prior to discharge to the Dutch Kills. The information provided in the CAP meets the SPDES Permit Equivalent Application Requirements for Remediation Discharges to Surface or Groundwaters.

The CAP was approved by the NYSDEC Bureau of Spill Prevention and Response and the Division of Water Resources on August 31, 2009. Subsequently, a Stipulation Agreement was issued by the NYSDEC which outlined the terms of the corrective action. Condition 4 of the Corrective Action Plan as contained in the Stipulation Agreement requires that all water collected as part of the construction activities and which will be discharged to the Dutch Kills, must not exceed the allowable contaminant limits as set forth in Table 2 - Wastewater Limits for Surface Water Discharges (see attached).

Discharge Monitoring

The estimated duration for the effluent discharge is three months. The first day of discharge is projected to be December 10, 2009.

225 PARK AVENUE SOUTH
NEW YORK, NEW YORK 10003-1604
(212) 777-4400 FAX: (212) 529-6237

The water treatment system will be operated and maintained by Maracap with technical assistance provided by Moretrench. The total discharge volume, average pump rate, and times of pump operation will be documented daily. The flow meters will be equipped with totalizers which measure the cumulative flow through a meter. Standby power and standby vacuum pump will be onsite and maintained in proper working order.

NYCDOT proposes a grab water sample be collected on a **weekly** basis (Monday mornings) from between the two (lead and lag) carbon adsorption units of the treatment system as shown on the attached treatment system plan.

The samples will be collected by Environmental Planning & Management (EPM) under subcontract to the NYCDOT. The weekly sample will be analyzed by a NYS accredited and certified laboratory for the parameters identified in Table 2 (attached) of the Stipulation Agreement. If any of the parameters for volatile organic compounds exceed the discharge limits established by NYSDEC, a repeat sample will be collected from the discharge of the lag carbon adsorption unit for analysis. In accordance with the Water Treatment Plan, if a repeat exceedance occurs from the lag carbon absorber the spent carbon will be removed and replaced with 10,000 pounds of reactivated carbon media. The results of the weekly monitoring sample will be submitted to the NYSDEC.

Weekly sampling and analysis will continue through the excavation phase of the project and the placement of the geomembrane at the base of the cofferdam. After the geomembrane is secured, the sampling and analysis for the Table 2 parameters will continue on a monthly basis until dewatering and treatment discharge to the Dutch Kills ceases.

In addition, the pH will be measured daily by the treatment system operator in accordance with the standards set forth in Table 2. If there is an exceedance of the pH range the contractor will perform repeat readings. If the pH readings continue to exceed the standards the contractor will install automatic pH adjustment devices into the Water Treatment Plant.

If there are any questions or comments to this Discharge Monitoring Plan, please contact me at your earliest convenience at 212-614-3412 or donald.hessemer@stvinc.com.

Sincerely,
STV, Incorporated

Donald P. Hessemer

Donald P. Hessemer
Senior Project Manager

Attachments: Table 2 – Wastewater Limits for Surface Water Discharges
Temporary Water Treatment System Schematic

cc: C. Chakrabarti - NYSDEC
S. Watts – NYSDEC
R. Ketani - NYSDEC

B. Duran - NYCDOT
R. Lofti – NYCDOT
J. Kurre - NYCDOT
H. Palmer - Haks
J. Aitken - Maracap
P. Casazza - Maracap
A. Marchan - STV
M. Tumulty - STV
T. Maguire - Moretrench

TABLE 2
Wastewater Limits For Surface Water Discharges

COMPOUND	GASOLINE	FUEL OIL
pH range	6.5 - 8.5	6.5 - 8.5
Benzene[1]	7 ug/l	7 ug/l
Ethylbenzene	5 ug/l	5 ug/l
Toluene	5 ug/l	5 ug/l
o-Xylene	5 ug/l	5 ug/l
m-Xylene	5 ug/l	5 ug/l
p-Xylene	5 ug/l	5 ug/l
Mixed xylenes	5 ug/l	5 ug/l
Naphthalene	10 ug/l	10 ug/l
MTBE	10 ug/l	10 ug/l

N A = not applicable

[1] The benzene limits for discharge to Class A surface waters are applicable for water bodies capable of 7:1 dilution ratio of base flow to discharge flow. The Division of Water may be consulted for assistance as needed

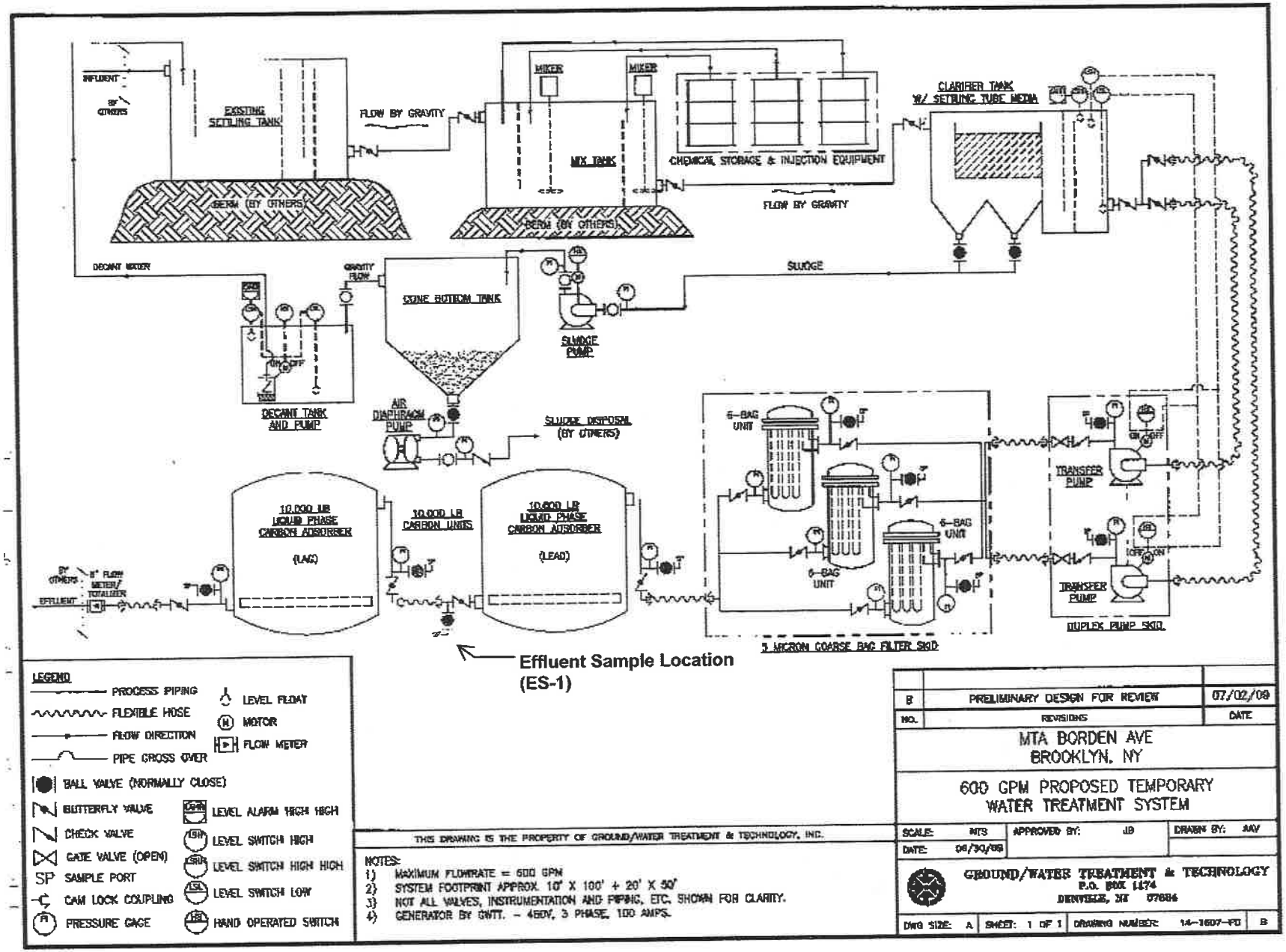
INFLUENT
BY OTHERS
EXISTING SETTLING TANK
BERM (BY OTHERS)
FLOW BY GRAVITY
MIXER
MIXER
MIX TANK
CHEMICAL STORAGE & INJECTION EQUIPMENT
BERM (BY OTHERS)
FLOW BY GRAVITY
CLARIFIER TANK W/ SETTLING TUBE MEDIA
DECANT WATER
GRAVITY FLOW
CONE BOTTOM TANK
SLUDGE
SLUDGE PUMP
DECANT TANK AND PUMP
AIR DIAPHRAGM PUMP
SLUDGE DISPOSAL (BY OTHERS)
10,000 LB LIQUID PHASE CARBON ADSORBER (LAG)
10,000 LB CARBON UNITS
10,000 LB LIQUID PHASE CARBON ADSORBER (LEAD)
BY OTHERS
6" FLOW METER/ TOTALIZER
EFFLUENT
5-BAG UNIT
5-BAG UNIT
5-BAG UNIT
5 MICRON COARSE BAG FILTER SKID
TRANSFER PUMP
TRANSFER PUMP
DUPLEX PUMP SKID
Effluent Sample Location (ES-1)
LEGEND
PROCESS PIPING
FLEXIBLE HOSE
FLOW DIRECTION
PIPE CROSS OVER
BALL VALVE (NORMALLY CLOSE)
BUTTERFLY VALVE
CHECK VALVE
GATE VALVE (OPEN)
SP SAMPLE PORT
CAM LOCK COUPLING
PRESSURE GAGE
LEVEL FLOAT
MOTOR
FLOW METER
LEVEL ALARM HIGH HIGH
LEVEL SWITCH HIGH
LEVEL SWITCH HIGH HIGH
LEVEL SWITCH LOW
HAND OPERATED SWITCH
THIS DRAWING IS THE PROPERTY OF GROUND/WATER TREATMENT & TECHNOLOGY, INC.
NOTES:
1) MAXIMUM FLOWRATE = 600 GPM
2) SYSTEM FOOTPRINT APPROX. 10' X 100' + 20' X 50'
3) NOT ALL VALVES, INSTRUMENTATION AND PIPING, ETC. SHOWN FOR CLARITY.
4) GENERATOR BY CWTT. - 480V, 3 PHASE, 100 AMPS.
B PRELIMINARY DESIGN FOR REVIEW 07/02/09
NO. REVISIONS DATE
MTA BORDEN AVE
BROOKLYN, NY
600 GPM PROPOSED TEMPORARY WATER TREATMENT SYSTEM
SCALE: NTS
APPROVED BY: JB
DRAWN BY: JMV
DATE: 06/30/09
GROUND/WATER TREATMENT & TECHNOLOGY
P.O. BOX 1174
DENVILLE, NJ 07834
DWG SIZE: A
SHEET: 1 OF 1
DRAWING NUMBER: 14-1607-PD
B

STV

December 11 2009

Mr. Rafael Ketani, MS, CPG
NYS Department of Environmental Conservation
Hunters Point Plaza
47-40 21st Street
Long Island City, New York, NY 11101-5401

Reference: Emergency Reconstruction of West Abutment and Wingwalls
Borden Avenue Bridge over Dutch Kills
Corrective Action Plan

Dear Mr. Ketani:

This letter provides notification that the dewatering operations at the project were started yesterday. A water sample was collected from the sampling port between the two carbon units and sent for expedited laboratory analyses of the parameters stipulated in the approved Corrective Action Plan (CAP). Field measurements of pH indicate that the effluent is exceeding the 8.5 threshold stipulated in the approved CAP. Measurements taken yesterday and today indicate pH varied between 8.38 and 9.1. As per our letter of December 7, 2009 regarding the discharge monitoring plan and pH exceedances the contractor is taking corrective action by installing a pH adjustment unit to the treatment system today. We will keep you informed as these activities proceed and the effectiveness of pH adjustment unit. Please contact us with any questions or comments.

Sincerely,
STV Incorporated

Donald P. Hessemer

Donald P. Hessemer
Senior Project Manager

cc: Beatrice Duran, NYCDOT
John Kurre, NYCDOT
Harold Palmer, HAKS
Alan Marchan, STV
Selvin Southwell, NYSDEC

225 PARK AVENUE SOUTH
NEW YORK, NEW YORK 10003-1604
(212) 777-4400 FAX: (212) 529-5237

STV

January 7, 2010

Mr. Rafael Ketani, MS, CPG
NYS Department of Environmental Conservation
Hunters Point Plaza
47-40 21st Street
Long Island City, New York, NY 11101-5401

Reference: Emergency Reconstruction of West Abutment and Wingwalls
Borden Avenue Bridge over Dutch Kills
Corrective Action Plan Addendum Request

Dear Mr. Ketani:

On behalf of the New York City Department of Transportation, (NYCDOT), this letter serves to request approval of modifications to the Sediment Staging Area for the above-referenced project. The Sediment Staging Area was previously approved by the New York State Department of Environmental Conservation (NYSDEC) as part of an Amended Corrective Action Plan (CAP) on August 31, 2009.

Figures 3 and 3A (attached) provide the current design drawing of the Sediment Staging Area contained in the CAP. The attached Drawing S-558R depicts a proposed expansion of the Sediment Staging Area that will allow greater capacity for sediment handling and drying as well as increase in excavation productivity. Currently, the Contractor is unable to excavate during a night-shift due to a lack of staging area space. The proposed expansion will accelerate the rate of excavation and sediment disposal and thereby improve the efficiency of the project.

We understand that upon approval of this CAP Amendment, it will become incorporated by reference to the Stipulation Agreement between NYSDEC and NYCDOT.

Please contact us if you have any questions or comments

Sincerely,
STV Incorporated

Donald P. Hessemer

Donald P. Hessemer
Senior Project Manager

cc: Jesse Krief, NYSDEC
Beatrice Duran, NYCDOT
John Kurre, NYCDOT
Harold Palmer, HAKS
Alan Marchan, STV

Attachments: Figure 3 – Temporary Sediment Staging Area
Figure 3A – Temporary Sediment Staging Area, Sheet 2
Drawling S-558R – Proposed Sediment Staging Area Expansion

AN EMPLOYEE-OWNED COMPANY PROVIDING QUALITY SERVICE SINCE 1912 | 225 PARK AVENUE SOUTH
NEW YORK, NEW YORK 10003-1604
(212) 777-4400 FAX: (212) 629-5237

STV

January 11, 2010

Mr. John Cryan
NYS Department of Environmental Conservation
Division of Environmental Permits, Region 2
47-40 21st Street
Long Island City
New York, NY 11101

Reference: **Emergency Reconstruction of West Abutment and Wingwalls Borden Avenue Bridge over Dutch Kills, NYCDOT Contract HBQ1162E**
NYSDEC Permit ID-2-6304-01440/00004/00005/00006

Subject: **Request for Permit Modification**

Dear Mr. Cryan:

On behalf of the NYC Department of Transportation (NYCDOT), STV Inc. requests that the above referenced permits be modified. The permits were initially approved on February 12, 2009 with subsequent Notices of Permit Modification issued on April 2, 2009 and November 19, 2009.

This request for permit modification is to formally propose modifications to the project's Sediment Staging Area which is being used to stage and dry excavated petroleum-impacted sediment prior to off-site disposal. Please note that the engineering details of this Staging Area were previously submitted to the NYSDEC Spills Division in a Corrective Action Plan (CAP) to address Spill Case No. 0903437 at the site. An amended CAP was approved by the NYSDEC Division of Marine Resources and the Bureau of Spill Prevention Response on August 31, 2009.

The attached Drawings S-558 and S-559 provide the current design drawing of the Sediment Staging Area approved in the November 19, 2009 Permit Modification and August 31, 2009 Amended CAP approval. The attached Drawing S-558 (Revision) depicts a proposed expansion of the Sediment Staging Area that will allow greater capacity for sediment handling and drying as well as increase in excavation productivity. Currently, the Contractor is unable to excavate during a night-shift due to a lack of staging area space. The proposed expansion will accelerate the rate of excavation and sediment disposal and thereby improve the efficiency of the project. A formal request to modify the CAP has been submitted to Mr. Raphael Ketani of the NYSDEC Spills Division under separate cover in a letter dated January 7, 2010.

We trust this information sufficiently supports our request for permit modification. A check in the amount of $200 is attached as application fee for this permit modification request. If you have any questions or additional comments, please contact Mr. Donald Hessemer or Mr. Alan Marchan at 212-777-4400.

Sincerely,
STV, Incorporated

Donald P. Hessemer
Environmental Project Manager

Alan P. Marchan, P.E.
Project Manager

225 PARK AVENUE SOUTH
NEW YORK, NEW YORK
(212) 777-4400 FAX: (2

cc: Jesselynne Krief, NYSDEC, Bureau of Marine Services
Harold Dickey, NYSDEC, Division of Environmental Permits
Raphael Ketani, NYSDEC Bureau of Spill Prevention and Response
George Klein, NYCDOT
Kedari Reddy, NYCDOT
Beatriz Duran, NYCDOT
John Kurre, NYCDOT

Attachments: Drawing S-558 Temporary Sediment Staging Area Sheet 1 of 2
Drawing S-559 Temporary Sediment Staging Area Sheet 2 of 2
Drawing S-558 **(Revised)** Temporary Sediment Staging Area Sheet 1 of 2
Permit Modification Application Fee - $200

FED. RD. REG. NO.	STATE	FEDERAL AID PROJECT NO.	SHEET NO.	TOTAL SHEETS
	NEW YORK			XXX

EMERGENCY RECONSTRUCTION OF WEST ABUTMENT AND WINGWALLS OF BORDEN AVENUE BRIDGE OVER DUTCH KILLS

P.I.N. 84197MB983BR	QUEENS	B.I.N. 2-24041-0

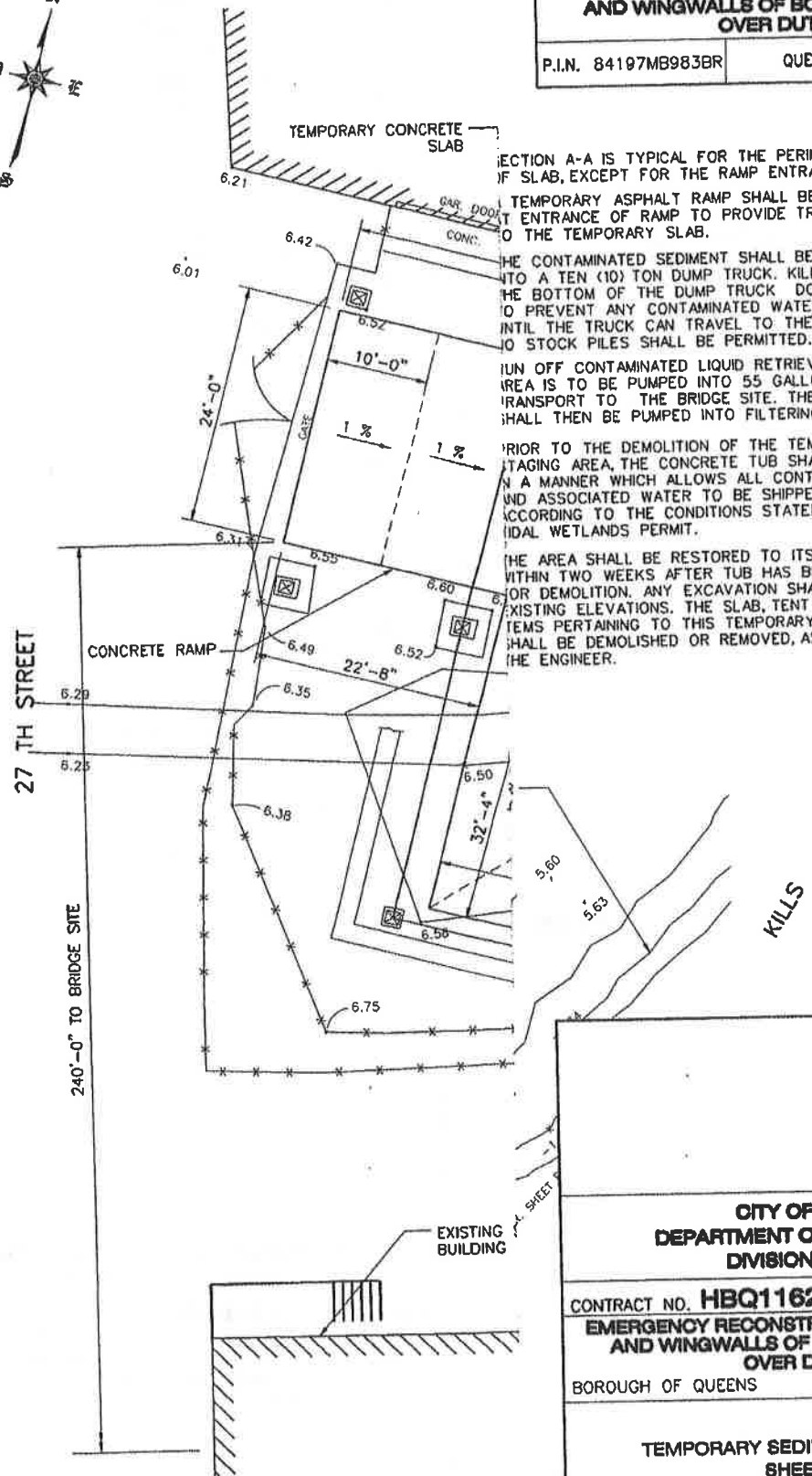

ECTION A-A IS TYPICAL FOR THE PERIMETER
F SLAB, EXCEPT FOR THE RAMP ENTRANCE.

TEMPORARY ASPHALT RAMP SHALL BE PROVIDED
T ENTRANCE OF RAMP TO PROVIDE TRUCK ACCESS
O THE TEMPORARY SLAB.

HE CONTAMINATED SEDIMENT SHALL BE LOADED DIRECTLY
NTO A TEN (10) TON DUMP TRUCK. KILN DUST WILL BE PLACED AT
HE BOTTOM OF THE DUMP TRUCK DOOR PRIOR TO LOADING
O PREVENT ANY CONTAMINATED WATER FROM LEAKING
NTIL THE TRUCK CAN TRAVEL TO THE STORAGE AREA
O STOCK PILES SHALL BE PERMITTED.

UN OFF CONTAMINATED LIQUID RETRIEVED IN STAGING
REA IS TO BE PUMPED INTO 55 GALLON DRUMS FOR TRUCK
RANSPORT TO THE BRIDGE SITE. THE 55 GALLON DRUMS
SHALL THEN BE PUMPED INTO FILTERING SYSTEM.

RIOR TO THE DEMOLITION OF THE TEMPORARY
TAGING AREA, THE CONCRETE TUB SHALL BE CLEANED
N A MANNER WHICH ALLOWS ALL CONTAMINATED SOIL
ND ASSOCIATED WATER TO BE SHIPPED OR TREATED
CCORDING TO THE CONDITIONS STATED UNDER THE
IDAL WETLANDS PERMIT.

HE AREA SHALL BE RESTORED TO ITS EXISTING CONDITION
ITHIN TWO WEEKS AFTER TUB HAS BEEN PREPARED
OR DEMOLITION. ANY EXCAVATION SHALL BE FILLED TO ITS
XISTING ELEVATIONS. THE SLAB, TENT AND ANY OTHER
TEMS PERTAINING TO THIS TEMPORARY STAGING AREA
SHALL BE DEMOLISHED OR REMOVED, AS DIRECTED BY
HE ENGINEER.

CITY OF NEW YORK
DEPARTMENT OF TRANSPORTATION
DIVISION OF BRIDGES

CONTRACT NO. **HBQ1162E**

EMERGENCY RECONSTRUCTION OF WEST ABUTMENT AND WINGWALLS OF BORDEN AVENUE BRIDGE OVER DUTCH KILLS

BOROUGH OF QUEENS B.I.N. 2-24041-0

TEMPORARY SEDIMENT STAGING AREA
SHEET 1 OF 2

DWG. NO.	SCALE	DATE	SHEET
S-558	AS NOTED	11/20/09	98

STV Incorporated
architects/engineers/planners/interior designers
225 Park Avenue South, New York, NY 10003

1/8"=1'-0"

11/16/2009\\Projects\0201605\0201605_0001\70_Technical Documents Reports\73_Technical Reports\1605\Borden\Emergency Work\NY 03-09-09\Other Dwgs\Permit Drawings\S-558.dgn

FED. RD. REG. NO.	STATE	FEDERAL AID PROJECT NO.	SHEET NO.	TOTAL SHEETS
	NEW YORK			XXX

EMERGENCY RECONSTRUCTION OF WEST ABUTMENT AND WINGWALLS OF BORDEN AVENUE BRIDGE OVER DUTCH KILLS

P.I.N. 84197MB983BR	QUEENS	B.I.N. 2-24041-0

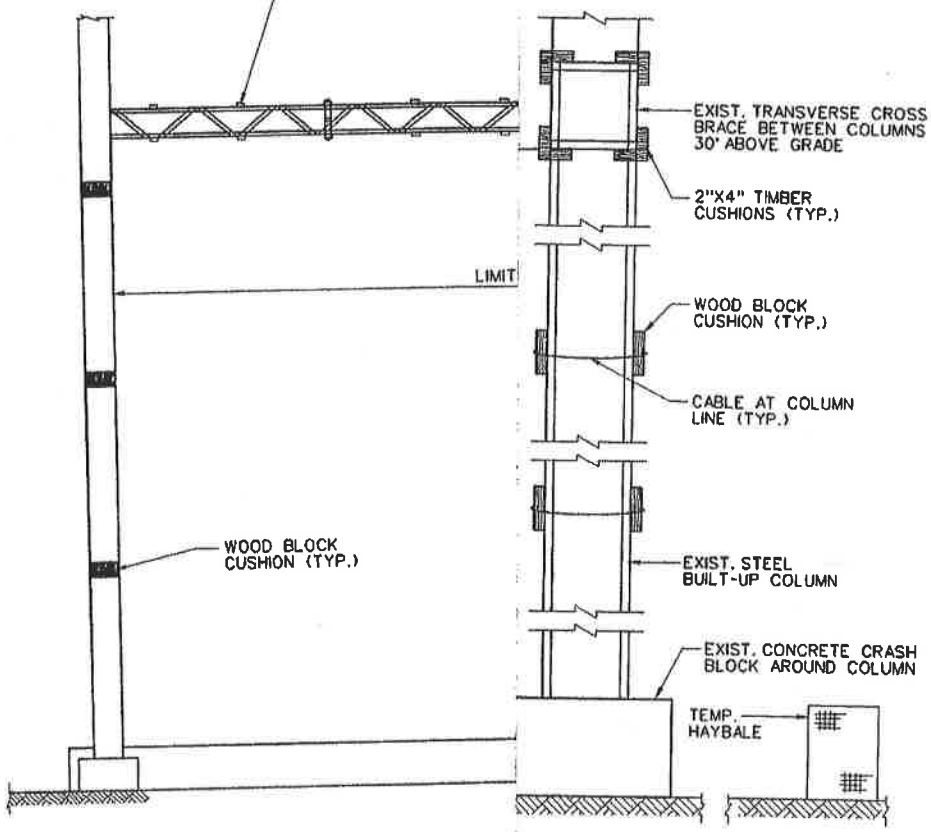

TYPICAL BE CAL BENT CROSS SECTION

SCALE: 3/4"=1'-0"

CITY OF NEW YORK
DEPARTMENT OF TRANSPORTATION
DIVISION OF BRIDGES

CONTRACT NO. **HBQ1162E**

EMERGENCY RECONSTRUCTION OF WEST ABUTMENT AND WINGWALLS OF BORDEN AVENUE BRIDGE OVER DUTCH KILLS

BOROUGH OF QUEENS B.I.N. 2-24041-0

TEMPORARY SEDIMENT STAGING AREA
SHEET 2 OF 2

DWG. NO.	SCALE	DATE	SHEET
S-559	AS NOTED	11/20/09	99

STV Incorporated
architects/engineers/planners/interior designers
225 Park Avenue South, New York, NY 10003

11/16/2009 L:\Projects\Q201606\Q201606_0001\70_Technical Documents Reports\73_Technical Reports\1606\Borden\Emergency Work\NY 03-09-09\Other Dwgs\Permit Drawings\S-559.dgn

FED. RD. REG. NO.	STATE	FEDERAL AID PROJECT NO.	SHEET NO.	TOTAL SHEETS
	NEW YORK			XXX

EMERGENCY RECONSTRUCTION OF WEST ABUTMENT AND WINGWALLS OF BORDEN AVENUE BRIDGE OVER DUTCH KILLS

P.I.N. 84197MB983BR	QUEENS	B.I.N. 2-24041-0

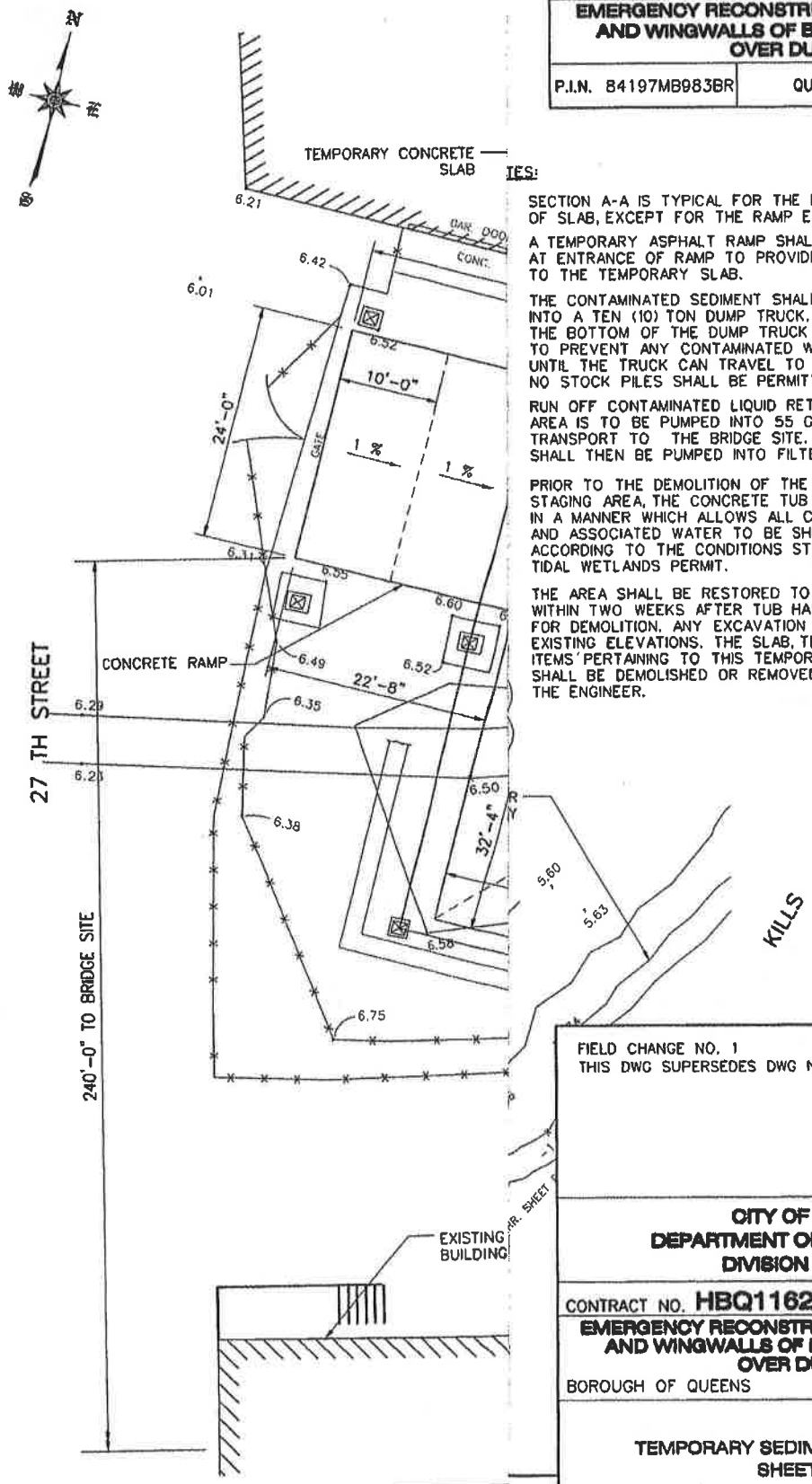

IES:

SECTION A-A IS TYPICAL FOR THE PERIMETER OF SLAB, EXCEPT FOR THE RAMP ENTRANCE.

A TEMPORARY ASPHALT RAMP SHALL BE PROVIDED AT ENTRANCE OF RAMP TO PROVIDE TRUCK ACCESS TO THE TEMPORARY SLAB.

THE CONTAMINATED SEDIMENT SHALL BE LOADED DIRECTLY INTO A TEN (10) TON DUMP TRUCK. KILN DUST WILL BE PLACED AT THE BOTTOM OF THE DUMP TRUCK DOOR PRIOR TO LOADING TO PREVENT ANY CONTAMINATED WATER FROM LEAKING UNTIL THE TRUCK CAN TRAVEL TO THE STORAGE AREA NO STOCK PILES SHALL BE PERMITTED.

RUN OFF CONTAMINATED LIQUID RETRIEVED IN STAGING AREA IS TO BE PUMPED INTO 55 GALLON DRUMS FOR TRUCK TRANSPORT TO THE BRIDGE SITE. THE 55 GALLON DRUMS SHALL THEN BE PUMPED INTO FILTERING SYSTEM.

PRIOR TO THE DEMOLITION OF THE TEMPORARY STAGING AREA, THE CONCRETE TUB SHALL BE CLEANED IN A MANNER WHICH ALLOWS ALL CONTAMINATED SOIL AND ASSOCIATED WATER TO BE SHIPPED OR TREATED ACCORDING TO THE CONDITIONS STATED UNDER THE TIDAL WETLANDS PERMIT.

THE AREA SHALL BE RESTORED TO ITS EXISTING CONDITION WITHIN TWO WEEKS AFTER TUB HAS BEEN PREPARED FOR DEMOLITION. ANY EXCAVATION SHALL BE FILLED TO ITS EXISTING ELEVATIONS. THE SLAB, TENT AND ANY OTHER ITEMS PERTAINING TO THIS TEMPORARY STAGING AREA SHALL BE DEMOLISHED OR REMOVED, AS DIRECTED BY THE ENGINEER.

FIELD CHANGE NO. 1 [1]
THIS DWG SUPERSEDES DWG NO. S-558 (12/29/09)

CITY OF NEW YORK
DEPARTMENT OF TRANSPORTATION
DIVISION OF BRIDGES

CONTRACT NO. **HBQ1162E**

EMERGENCY RECONSTRUCTION OF WEST ABUTMENT AND WINGWALLS OF BORDEN AVENUE BRIDGE OVER DUTCH KILLS

BOROUGH OF QUEENS B.I.N. 2-24041-0

TEMPORARY SEDIMENT STAGING AREA
SHEET 1 OF 2

DWG. NO. [1]	SCALE	DATE [1]	SHEET
S-558R	AS NOTED	12/29/09	98

STV Incorporated
architects/engineers/planners/interior designers
225 Park Avenue South, New York, NY 10003

1/8"=1'-0"

1/7/2010 K:\Projects\0201605\0201605_0001\70_Technical Documents Reports\73_Technical Reports\1606\Borden\Emergency Work\NY 03-09-09\Other Dwgs\Permit Drawings\S-558(Revised).dgn

New York State Department of Environmental Conservation
Division of Environmental Permits, Region 2
47-40 21ST Street, Long Island City, NY 11101-5407
Phone: (718) 482-4997 • **FAX:** (718) 482-4975
Website: www.dec.state.ny.us

Alexander B. Grannis
Commissioner

January 26, 2010

Donald P. Hessemer
STV Incorporated
225 Park Avenue South
New York, NY 10003

Re: NYSDEC Permit No. 2-6304-01440/00004
NYC Dept. Of Transportation
Borden Avenue Bridge over Dutch Kills
Borden Avenue between 27th Street & Review Avenue
Queens, New York
6NYCRR Part 608 - Water Quality Certification
NYCRR Part 661 - Tidal Wetlands
ECL Article 15 - Protection of Waters
NOTICE OF PERMIT MODIFICATION

Dear Mr. Hessemer:

In response to your request, please be advised that the above referenced permit has been modified to authorize changes to the project's Sediment Staging Area. Your modified permit is attached. Please read it carefully. Compliance with all permit conditions is required.

If you have any technical questions concerning the permit please contact Jesselynne Krief in the NYSDEC Bureau of Marine Resources at 718 482-6464. Administrative questions should be directed to Tammy Greco in the NYSDEC Division of Environmental Permits at 718 482-4997.

Sincerely,

Harold J. Dickey
Deputy Regional Permit Administrator

cc: NYC Dept. Of Transportation
NYSDEC Marine Resources
NYSDEC Law Enforcement

NEW YORK STATE DEPARTMENT OF ENVIRONMENTAL CONSERVATION
Facility DEC ID 2-6304-01440

PERMIT

Under the Environmental Conservation Law (ECL)

Permittee and Facility Information

Permit Issued To:
NYC DEPT OF TRANSPORTATION
40 WORTH ST 11TH FL
NEW YORK, NY 10003
(212) 676-0557

Facility:
NYC DOT - BORDEN AVE BRIDGE
BORDEN AVE BTWN 25TH & 27TH ST
LONG ISLAND CITY, NY 11101

Facility Location: in QUEENS COUNTY **Village:** Long Island City
Facility Principal Reference Point: NYTM-E: 589.262 NYTM-N: 4510.311
Latitude: 41°44'20.1" Longitude: 74°56'34.1"
Project Location: West Bridge Abutment
Authorized Activity: Repair / replace west bridge abutment.

Permit Authorizations

Tidal Wetlands - Under Article 25
Permit ID 2-6304-01440/00004

New Permit	Effective Date: 2/12/2009	Expiration Date: 12/31/2010
Modification # 1	Effective Date: 4/2/2009	Expiration Date: 12/31/2010
Modification # 2	Effective Date: 11/19/2009	Expiration Date: 12/31/2010
Modification # 3	Effective Date: 1/26/2010	Expiration Date: 12/31/2010

Water Quality Certification - Under Section 401 - Clean Water Act
Permit ID 2-6304-01440/00005

New Permit	Effective Date: 2/12/2009	Expiration Date: 12/31/2010
Modification # 1	Effective Date: 4/2/2009	Expiration Date: 12/31/2010
Modification # 2	Effective Date: 11/19/2009	Expiration Date: 12/31/2010
Modification # 3	Effective Date: 1/26/2010	Expiration Date: 12/31/2010

Excavation & Fill in Navigable Waters - Under Article 15, Title 5
Permit ID 2-6304-01440/00006

New Permit	Effective Date: 2/12/2009	Expiration Date: 12/31/2010
Modification # 1	Effective Date: 4/2/2009	Expiration Date: 12/31/2010
Modification # 2	Effective Date: 11/19/2009	Expiration Date: 12/31/2010
Modification # 3	Effective Date: 1/26/2010	Expiration Date: 12/31/2010

NYSDEC Approval

By acceptance of this permit, the permittee agrees that the permit is contingent upon strict compliance with the ECL, all applicable regulations, and all conditions included as part of this permit.

Permit Administrator: JOHN F CRYAN, Regional Permit Administrator

Address: NYSDEC REGION 2 HEADQUARTERS
47-40 21ST ST
LONG ISLAND CITY, NY 11101 -5407

Authorized Signature: John J. Lyman Date 01/26/10

Permit Components

NATURAL RESOURCE PERMIT CONDITIONS

WATER QUALITY CERTIFICATION SPECIFIC CONDITION

GENERAL CONDITIONS, APPLY TO ALL AUTHORIZED PERMITS

NOTIFICATION OF OTHER PERMITTEE OBLIGATIONS

NATURAL RESOURCE PERMIT CONDITIONS - Apply to the Following Permits: TIDAL WETLANDS; WATER QUALITY CERTIFICATION; EXCAVATION & FILL IN NAVIGABLE WATERS

1. **Conformance With Plans** All activities authorized by this permit must be in strict conformance with the approved plans submitted by the applicant or applicant's agent as part of the permit application. Such approved plans were prepared by STV Incorporated and Ground/Water Treatment & Technology for the City of New York Department of Transportation Division of Bridges.

2. **Conformance with Plans - Addenda** In addition to plans referenced in the Condition titled "Conformance with Plans," the activities authorized by this permit must be in strict conformance with the following approved plans and/or submissions made as part of the permit application:

a. Plans prepared by STV Incorporated for the City of New York Department of Transportation Division of Bridges contract no. HBQ1162E entitled: "Emergency Reconstruction of West Abutment and Wingwalls of Borden Avenue Bridge over Dutch Kills", SHEETS 8, 18, 67R, 71R, 72R, 75R, 78R, 82, 83, 88, 94R, 96, 97, 99 and 103 dated Nov 20, 2009, received by NYS DEC on Nov 16, 2009.

b. Plans prepared by STV Incorporated for the City of New York Department of Transportation Division of Bridges contract no. HBQ1162E entitled: "Emergency reconstruction of West Abutment and Wingwalls of Borden Avenue Bridge of Dutch Kills", Sheet 98 dated December 29, 2009, received by NYS DEC on January 12, 2010.

The location of the Water treatment system and treatment system details must be consistent with the plans and information included in the CAP approved by DEC on August 31, 2009.

3. **Mitigation Plan** Permittee must provide a Mitigation Plan that allows for the removal of approximately 75 cubic yards of debris/material from the Dutch Kills shoreline as well as the stabilization of disturbed areas on either side of the replaced bridge abutment. The stabilization design must result in no increase of net fill in the waterway and a shoreline with a proposed slope no further

seaward than the existing slope. Within ninety (90) days of permit issuance, the Permittee must submit for review and approval a proposed Mitigation Plan to NYSDEC Bureau of Marine Resources, 47-40 21st Street, Long Island City, New York 11101 (Attention: Jesse Krief). The Mitigation Plan must include a location, a detailed description of the project, and a time schedule for the mitigation project as well as permission from adjacent land owners for all work proposed on adjacent properties not owned by NYCDOT. The Mitigation Plan must be of sufficient detail and substance that it can be accepted by DEC with minimal revision. Within two (2) weeks of receiving comments to the proposed Mitigation Plan, Permittee must submit a revised proposed Mitigation Plan incorporating DEC's comments. Upon approval of the proposed Mitigation Plan Permittee must complete the Mitigation Plan pursuant to the approved schedule or, if no schedule is approved, without delay. Permittee may contact Jesse Krief in the NYSDEC Bureau of Marine Resources at (718) 482-6464 with any questions concerning the Mitigation Plan.

4. **Removal of Temporary Structures** Within sixty (60) days of the completion of the abutment reconstruction activities all temporary structures installed to facilitate the reconstruction must be removed in their entirety. After removal is complete all areas must be restored to original grades using only clean/natural fill and stabilized. Temporary structures to be removed include the sediment staging area, the temporary flume, outfall pipe and baffle, temporary timber pontoon bridge and landings.

5. **HDPE Geomembrane Liner Requirements** Installation of a continuous 60 MIL HDPE geomembrane liner must be installed over all oil contaminated sediment within the cofferdam surrounding the bridge abutment, and on slopes that expose similarly oil contaminated sediment. A one (1) foot minimum cushioning layer must be installed on either side of the liner in order to prevent puncturing. All liner panels must be hot welded together with at least a six (6) inch overlap. All edges of the geomembrane panels adjacent to the bridge abutment must be sealed to the bridge abutment. All liner edges not adjacent to the abutment must be buried in an anchoring trench. Where space is limited and an anchoring trench is not possible liner edges must be left flat and carefully covered with backfill.

6. **Timber Fender Replacement** The replacement of the timber fender system is limited to areas where the fender existed prior to removal of the abutment and must be attached directly to the abutment face as shown on the project plans referenced in Natural Resources Permit Condition 2, specifically sheets 8, 18 and 94R.

7. **Notice of Intent to Commence Work** At least five (5) days prior to commencement of the permitted activity, Permittee must complete and submit the attached "Notice of Intent to Commence Work" to NYSDEC Bureau of Marine Resources, 47-40 21st Street, Long Island City, New York 11101 (Attention: Jesselynne Krief).

8. **Post Permit Sign** The permit sign enclosed with this permit shall be posted in a conspicuous location on the worksite and adequately protected from the weather.

9. **Post Construction Photographs** Within 30 days of the completion of work authorized by this permit, Permittee must provide post-construction photographs of the work area to: NYSDEC Bureau of Marine Resources, 47-40 21st Street, Long Island City, New York 11101 (Attention: Jesse Krief).

10. **Best Management Practices** Best management practices must be employed to prevent the loss of construction materials, debris, and sediment from entering the waterways. Such practices may include, but are not limited to silt fencing, hay bales, floating booms, and oil capture systems. At minimum a floating boom with attached silt curtain must be installed encircling the entire project site for both the

preliminary inspection of the relieving platform and for the duration of the project.

11. **Precautions Against Contamination of Waters** All necessary precautions shall be taken to preclude contamination of any wetland or waterway by suspended solids, sediments, fuels, solvents, lubricants, epoxy coatings, paints, concrete, leachate or any other environmentally deleterious materials associated with the project.

12. **Discharge to Tidal Wetlands Prohibited** There must be no discharge of runoff or other effluent over or through any abutment wall or shoreline stabilization structure or into any tidal wetland or tidal wetlands adjacent area (unless specifically authorized by this permit).

13. **Water Treatment** All waters discharged into the Dutch Kills resulting from the dewatering activities associated with this project must first undergo treatment as described in the Corrective Action Plan approved by NYSDEC on August 31, 2009. The location of the treatment system must also remain consistent with the CAP. All effluent must be discharged into areas of the Dutch Kills with water depths greater than 4 feet at mean low water.

14. **Concrete/ Leachate Discharges Prohibited** During construction, concrete or leachate must not escape or be discharged. Washings from transit mix trucks, mixers, or other devices must not enter tidal wetlands and or protected buffer areas.

15. **Excavate Backfill Prior to Removal of Abutment** Prior to any construction or removal of the abutment and other shoreline stabilization structures all backfill must be excavated landward of the abutment and retained so as not to enter the waterway, tidal wetland or protected buffer area.

16. **Construct Abutment Prior to Fill Placement** Reconstruction or repair of the west abutment wall must be completed prior to placement of any fill material on either side of this structure.

17. **Installation of Cofferdam & Sheeting Protection Prior to Excavation** All cofferdams and protective sheeting functioning as the seaward project boundaries must be installed prior to excavation and removal of existing structures and fill immediately landward of such structures.

18. **Cofferdam Removal** Within (30) of the completion of the abutment wall reconstruction, all cofferdams, protective sheeting and associated bracing structures installed seaward of the abutment wall must be pulled in their entirety.

19. **No Weep Holes** The construction of weep holes in the abutment wall is strictly prohibited.

20. **Discharge of Effluent Obtained Through Excavation of Material** The effluent discharged from the water treatment system into the Dutch Kills Creek must not contain a visible contrast to the receiving water. If the effluent bears a substantial visible contrast to the receiving waters, discharging must cease and the water must be reintroduced back into the head of the treatment system until no visible contrast is seen.

21. **No Equipment Below High Water** Equipment operation below apparent high water is strictly prohibited.

22. **Dewatering** All sediment removed from within the excavation area must be dewatered within the confines of the concrete pad located in the sediment staging area shown on project plans referenced in

Natural Resource Permit Condition 2. All effluent must be transported to and incorporated into the treatment system.

23. **Storage of Construction Equipment & Materials** The storage of construction equipment and materials must be confined to within the project work site and or upland areas greater than 35 linear feet from the tidal wetland boundary and outside the area of excavation.

24. **Disposal of Excavated Material** All dredged material must be retained so as to not re-enter any water body, tidal wetland, or protected buffer area and be disposed of at an upland site approved to accept petroleum contaminated sediments. Excavated sediments from within the cofferdam area must be placed directly into a conveyance vehicle for transportation to the stockpile area. The sidecasting (double dipping) or temporary storage of excavated material is prohibited.

25. **Prohibited Treated Wood** Use of wood treated with creosote is prohibited. Wood treated with Pentachlorophenol (PCP) must not be used in wetlands or surface waters. Standard pressure treated lumber with CCA and its use is permitted.

26. **Use of wood Preservatives** Pressure treated wood used for construction of in-water structures must have been treated with a preservative and must have undergone a treatment process approved (stamped or otherwise marked as certified) by the American Wood Preservative Association.

Chromated Copper Arsenate (CCA) pressure treated wood must be clean and free of CCA surface deposits. Wood with surface deposits must be washed for at least 5 minutes under running water prior to use. (Note the following condition for the handling of wash water.)

Any wood debris such as sawdust or wash water must not enter any water body, including wetlands, or protected buffer areas. Field application of CCA is strictly prohibited.

27. **Debris Removal** Should any demolition or construction debris fall into the waterway or enter the tidal wetlands, it must be removed immediately.

28. **Debris Disposal** Any debris or excess material from construction of this project will be completely removed from the adjacent area (upland) and removed to an approved upland area for disposal. No debris is permitted in tidal wetlands or tidal wetlands adjacent area or protected buffer areas. All demolition and construction debris must be properly disposed of at a licensed facility.

29. **Clean Fill Material Only** All fill material must consist of "clean" sand, gravel, or soil. The use of material such as asphalt, slag, fly-ash, recycled concrete aggregate (RCA), broken concrete, or demolition debris is strictly prohibited.

30. **Containment of Disturbed Soils** All disturbed areas where soil will be temporarily exposed or stockpiled for longer than one (1) week must be contained by a continuous line of staked hay bales/silt curtain (or other NYSDEC approved method) placed on the seaward side between the fill and wetland or protected buffer area. Tarps are authorized to supplement these approved methods.

31. **No Interference With Navigation** There shall be no unreasonable interference with navigation by the work herein authorized.

32. **Prior Approval of Changes** If the Permittee desires to make any changes in construction techniques, species to be planted, the site plan, any mitigation plan, scheduling or staging of

construction, or any other aspect of this project, the Permittee shall submit a written request to the Regional Permit Administrator to make such proposed changes and shall not make such changes unless authorized in writing by the Department.

33. **Minimize Adverse Impacts to Wetlands, Wildlife, Water** All work must be performed in a manner which minimizes adverse impacts to wetlands, wildlife, water quality and natural resources.

34. **Failure to Meet Permit Conditions** Failure of the permittee to meet all the conditions of this permit is a violation of this permit and grounds for an order to immediately cease the permitted activity at the project site.

35. **State May Require Site Restoration** If upon the expiration or revocation of this permit, the project hereby authorized has not been completed, the applicant shall, without expense to the State, and to such extent and in such time and manner as the Department of Environmental Conservation may require, remove all or any portion of the uncompleted structure or fill and restore the site to its former condition. No claim shall be made against the State of New York on account of any such removal or alteration.

36. **State May Order Removal or Alteration of Work** If future operations by the State of New York require an alteration in the position of the structure or work herein authorized, or if, in the opinion of the Department of Environmental Conservation it shall cause unreasonable obstruction to the free navigation of said waters or flood flows or endanger the health, safety or welfare of the people of the State, or cause loss or destruction of the natural resources of the State, the owner may be ordered by the Department to remove or alter the structural work, obstructions, or hazards caused thereby without expense to the State, and if, upon the expiration or revocation of this permit, the structure, fill, excavation, or other modification of the watercourse hereby authorized shall not be completed, the owners, shall, without expense to the State, and to such extent and in such time and manner as the Department of Environmental Conservation may require, remove all or any portion of the uncompleted structure or fill and restore to its former condition the navigable and flood capacity of the watercourse. No claim shall be made against the State of New York on account of any such removal or alteration.

37. **State Not Liable for Damage** The State of New York shall in no case be liable for any damage or injury to the structure or work herein authorized which may be caused by or result from future operations undertaken by the State for the conservation or improvement of navigation, or for other purposes, and no claim or right to compensation shall accrue from any such damage.

WATER QUALITY CERTIFICATION SPECIFIC CONDITIONS

1. **Water Quality Certification** The NYS Department of Environmental Conservation hereby certifies that the subject project will not contravene effluent limitations or other limitations or standards under Sections 301, 302, 303, 306 and 307 of the Clean Water Act of 1977 (PL 95-217) provided that all of the conditions listed herein are met.

GENERAL CONDITIONS - Apply to ALL Authorized Permits:

1. **Facility Inspection by The Department** The permitted site or facility, including relevant records, is subject to inspection at reasonable hours and intervals by an authorized representative of the Department of Environmental Conservation (the Department) to determine whether the permittee is complying with this permit and the ECL. Such representative may order the work suspended pursuant to ECL 71- 0301 and SAPA 401(3).

The permittee shall provide a person to accompany the Department's representative during an inspection to the permit area when requested by the Department.

A copy of this permit, including all referenced maps, drawings and special conditions, must be available for inspection by the Department at all times at the project site or facility. Failure to produce a copy of the permit upon request by a Department representative is a violation of this permit.

2. **Relationship of this Permit to Other Department Orders and Determinations** Unless expressly provided for by the Department, issuance of this permit does not modify, supersede or rescind any order or determination previously issued by the Department or any of the terms, conditions or requirements contained in such order or determination.

3. **Applications For Permit Renewals, Modifications or Transfers** The permittee must submit a separate written application to the Department for permit renewal, modification or transfer of this permit. Such application must include any forms or supplemental information the Department requires. Any renewal, modification or transfer granted by the Department must be in writing. Submission of applications for permit renewal, modification or transfer are to be submitted to:

Regional Permit Administrator
NYSDEC REGION 2 HEADQUARTERS
47-40 21ST ST
LONG ISLAND CITY, NY11101 -5407

4. **Submission of Renewal Application** The permittee must submit a renewal application at least 30 days before permit expiration for the following permit authorizations: Excavation & Fill in Navigable Waters, Tidal Wetlands, Water Quality Certification.

5. **Permit Modifications, Suspensions and Revocations by the Department** The Department reserves the right to modify, suspend or revoke this permit. The grounds for modification, suspension or revocation include:

a. materially false or inaccurate statements in the permit application or supporting papers;

b. failure by the permittee to comply with any terms or conditions of the permit;

c. exceeding the scope of the project as described in the permit application;

d. newly discovered material information or a material change in environmental conditions, relevant technology or applicable law or regulations since the issuance of the existing permit;

e. noncompliance with previously issued permit conditions, orders of the commissioner, any provisions of the Environmental Conservation Law or regulations of the Department related to the permitted activity.

6. **Permit Transfer** Permits are transferrable unless specifically prohibited by statute, regulation or another permit condition. Applications for permit transfer should be submitted prior to actual transfer of ownership.

NOTIFICATION OF OTHER PERMITTEE OBLIGATIONS

Item A: Permittee Accepts Legal Responsibility and Agrees to Indemnification
The permittee, excepting state or federal agencies, expressly agrees to indemnify and hold harmless the Department of Environmental Conservation of the State of New York, its representatives, employees, and agents ("DEC") for all claims, suits, actions, and damages, to the extent attributable to the permittee's acts or omissions in connection with the permittee's undertaking of activities in connection with, or operation and maintenance of, the facility or facilities authorized by the permit whether in compliance or not in compliance with the terms and conditions of the permit. This indemnification does not extend to any claims, suits, actions, or damages to the extent attributable to DEC's own negligent or intentional acts or omissions, or to any claims, suits, or actions naming the DEC and arising under Article 78 of the New York Civil Practice Laws and Rules or any citizen suit or civil rights provision under federal or state laws.

Item B: Permittee's Contractors to Comply with Permit
The permittee is responsible for informing its independent contractors, employees, agents and assigns of their responsibility to comply with this permit, including all special conditions while acting as the permittee's agent with respect to the permitted activities, and such persons shall be subject to the same sanctions for violations of the Environmental Conservation Law as those prescribed for the permittee.

Item C: Permittee Responsible for Obtaining Other Required Permits
The permittee is responsible for obtaining any other permits, approvals, lands, easements and rights-of-way that may be required to carry out the activities that are authorized by this permit.

Item D: No Right to Trespass or Interfere with Riparian Rights
This permit does not convey to the permittee any right to trespass upon the lands or interfere with the riparian rights of others in order to perform the permitted work nor does it authorize the impairment of any rights, title, or interest in real or personal property held or vested in a person not a party to the permit.

NOTICE OF INTENT TO COMMENCE WORK

Date: _____

NYSDEC Marine Resources
Attn. Jesse Krief
N.Y.S.D.E.C Region 2 Office
47-40 21st Street
Long Island City, N.Y. 11101

Re: NYSDEC Permit No. 2-6304-01440/00004
NYC Dept. Of Transportation
Borden Avenue bridge over Dutch Kills
Borden Avenue between 27th Street & Review Avenue
Queens, New York

Dear Ms. Krief:

In accordance with Natural Resource Condition 7 of the referenced permit, I hereby serve notice to commence work on _____, 200___.

This is also to certify that, having read this entire permit, I am fully aware of and understand the general and special conditions therein, and agree to comply with all such conditions. I further understand that prior to undertaking any modification to the subject work, I must seek and receive written approval of the NYSDEC Regional Permit Administrator.

_____
Signature of Permittee

_____
Name of Permittee (please print)

_____
Signature of Contractor

_____
Name of Contractor (please print)

_____
Street Address of Contractor

_____
City, State, & Zip Code of Contractor

_____
Telephone Number of Contractor

WARNING

The permittee and his contractor (if any) are required to follow all permit conditions. Violations of the permit may lead to legal action, including the imposition of substantial monetary fines and corrective work.

cc: NYSDEC Environmental Permits

New York State
Department of Environmental Conservation

NOTICE

The Department of Environmental Conservation (DEC) has issued permit(s) pursuant to the Environmental Conservation Law for work being conducted at this site. For further information regarding the nature and extent of the approved work and any Department conditions applied to the approval, contact the Regional Permit Administrator listed below. Please refer to the permit number shown when contacting the DEC.

Permit Number 2-6302-01440/00004

Expiration Date December 31, 2010

Regional Permit Administrator

John F. Cryan
47-40 21st Street
Long Island City, New York 11101
(718) 482-4997

NOTE: This notice is NOT a permit

New York State Department of Environmental Conservation
Division of Environmental Permits, Region 2
47-40 21ST Street, Long Island City, NY 11101-5407
Phone: (718) 482-4997 • **FAX:** (718) 482-4975
Website: www.dec.state.ny.us

Alexander B. Grannis
Commissioner

February 23, 2010

George Klein, P.E.
Deputy Chief Engineer
NYCDOT
40 Worth Street, Room 1228
New York, NY 10003

Re: NYSDEC Permit application #2-6304-01440/00008
Borden Avenue Bridge West Abutment and Wingwall Reconstruction
Temporary construction dewatering discharge
ECL Article 15, Title 15 - Long Island Well
NOTICE OF PERMIT MODIFICATION and RENEWAL

Dear Mr. Klein:

Enclosed is your modified Long Island Well permit for the above referenced project. It was effective beginning January 1, 2010 and expires on December 31, 2010. The following conditions have been modified:

Condition #2, Conformance with Plans - Addenda

A. Drawing entitled "Moretrench Boreden Avenue Bridge, Drawing Number 1" dated 4/23/09, revised 11/30/09 and 12/1/09, signed and stamped by Leonard R. Guglielmo, P.E., received by NYSDEC on December 4, 2009;
B. Drawing entitled "MTA Borden Ave Brooklyn, NY – 600 GPM Proposed Temporary Water Treatment System" dated July 2, 2009, received by NYSDEC on December 4, 2009.
D. Application package dated February 23, 2009, received March 4, 2009; responses to Incomplete Notices dated April 19, 2009, May 5, 2009 and May 8, 2009; and modification request dated December 1, 2009, received December 4, 2009.

Condition #7, Notice of Intent to Commence Work and Condition #9, Withdrawal not Authorized until Permit #2-6304-01440/00004 have been removed.

All other terms, specifications and conditions of the permit remain as previously written. A modified permit is enclosed, please replace old copies with this modified permit, including at the project site.

Please read all permit conditions carefully. All permit documents must be available at the site upon request by Department staff and must be distributed to and understood by personnel

responsible for the proper operation of the facility and compliance with the permit requirements. Any violation of these permit conditions constitutes a violation of the Environmental Conservation Law.

Please note that the maximum withdrawal rate authorized by this permit is 864,000 gallons per day.

If you have any questions regarding this permit, you may contact the Division of Environmental Permits at the above address. Please refer to the above referenced numbers when you are corresponding with this office or when you are applying to renew or modify this permit.

Sincerely,

Stephen A. Watts III
Environmental Program Specialist II

cc: Chan Chakrabarti, NYSDEC DOW
Selvin Southwell, NYSDEC DOW
Jesselynne Krief, NYSDEC Marine Resources
Raphael Ketani, NYSDEC Spills
Harold Dickey, NYSDEC Permits
Joe Mahon, Moretrench
Alan Marchan, STV Incorporated
John Aitken, Maracap Construction Industries, Inc.
File

NEW YORK STATE DEPARTMENT OF ENVIRONMENTAL CONSERVATION
Facility DEC ID 2-6304-01440

PERMIT

Under the Environmental Conservation Law (ECL)

Permittee and Facility Information

Permit Issued To:
NYC DEPT OF TRANSPORTATION
40 WORTH ST 11TH FL
NEW YORK, NY 10003
(212) 676-0557

Facility:
NYC DOT - BORDEN AVE BRIDGE
BORDEN AVE BTWN 25TH & 27TH ST
LONG ISLAND CITY, NY 11101

Facility Location: in QUEENS COUNTY
Facility Principal Reference Point: NYTM-E: 589.262 NYTM-N: 4510.311
Latitude: 41°44'20.1" Longitude: 74°56'34.1"

Authorized Activity: Install and operate a temporary dewatering system to facilitate reconstruction of the west abutment and wingwalls of the Borden Avenue Bridge over the Dutch Kills in Queens with a maximum withdrawal of 864,000 gallons per day. Pumped groundwater is to be directed to a temporary 12" outfall into Dutch Kills.

Permit Authorizations

Long Island Well - Under Article 15, Title 15
Permit ID 2-6304-01440/00007

New Permit	Effective Date: 5/21/2009	Expiration Date: 12/31/2009
Modification # 1	Effective Date: 1/1/2010	Expiration Date: 12/31/2010

NYSDEC Approval

By acceptance of this permit, the permittee agrees that the permit is contingent upon strict compliance with the ECL, all applicable regulations, and all conditions included as part of this permit.

Permit Administrator: JOHN F CRYAN, Regional Permit Administrator
Address: NYSDEC REGION 2 HEADQUARTERS
47-40 21ST ST
LONG ISLAND CITY, NY 11101 -5407

Authorized Signature: John F. Cryan Date 12/31/09

Permit Components

LONG ISLAND WELL PERMIT CONDITIONS

GENERAL CONDITIONS, APPLY TO ALL AUTHORIZED PERMITS

NOTIFICATION OF OTHER PERMITTEE OBLIGATIONS

LONG ISLAND WELL PERMIT CONDITIONS

1. **Conformance With Plans** All activities authorized by this permit must be in strict conformance with the approved plans submitted by the applicant or applicant's agent as part of the permit application. Such approved plans were prepared by Moretrench American for NYCDOT.

2. **Conformance with Plans - Addenda** In addition to plans referenced in the Condition titled "Conformance with Plans," the activities authorized by this permit must be in strict conformance with the following approved plans and/or submissions made as part of the permit application:

A. Drawing entitled "Moretrench Boreden Avenue Bridge, Drawing Number 1" dated 4/23/09, revised 11/30/09 and 12/1/09, signed and stamped by Leonard R. Guglielmo, P.E., received by NYSDEC on December 4, 2009;

B. Drawing entitled "MTA Borden Ave Brooklyn, NY – 600 GPM Proposed Temporary Water Treatment System" dated July 2, 2009, received by NYSDEC on December 4, 2009.

C. Region 2 Long Island Well Dewatering System Detail Sheet, signed by T.Aleksander Patrick on 5/5/09, received by NYSDEC on 5/5/09.

D. Application package dated February 23, 2009, received March 4, 2009; responses to Incomplete Notices dated April 19, 2009, May 5, 2009 and May 8, 2009; and modification request dated December 1, 2009, received December 4, 2009.

3. **Dewatering Wells, Pumps, Pump Capacities and Maximum Withdrawal** This permit authorizes the following:

- **Dewatering Wells - 12**
- **Installed Pumps - 12 (Only 6 of 12 pumps are authorized to operate simultaneously)**
- **Pump Capacity - 100 GPM (10 HP) pumps** (Pump of lesser capacity may be substituted at permittee's discretion.)
- **Maximum Withdrawal - 864,000 gallons per day**

4. **Daily Pump Log** A daily pump log must be kept at the project site at all times. The pump log must be made available to authorized representatives of the Department during pumping operations.

5. **Handling of Contaminated Groundwater** The permittee is fully responsible for proper handling and all costs associated with the proper sampling, treatment and disposal of any contaminated groundwater.

6. **Well Driller Registration** The dewatering operation shall be performed by Well Drillers duly registered in accordance with Section 15-1525 of the Environmental Conservation Law of the State of New York.

7. **Posting of NYSDEC Permit Sign** The attached NYSDEC permit sign shall be posted, protected from the weather, in a conspicuous outdoor location at the project site. This sign is to be posted for the

duration of work authorized by this permit.

GENERAL CONDITIONS - Apply to ALL Authorized Permits:

1. **Facility Inspection by The Department** The permitted site or facility, including relevant records, is subject to inspection at reasonable hours and intervals by an authorized representative of the Department of Environmental Conservation (the Department) to determine whether the permittee is complying with this permit and the ECL. Such representative may order the work suspended pursuant to ECL 71- 0301 and SAPA 401(3).

The permittee shall provide a person to accompany the Department's representative during an inspection to the permit area when requested by the Department.

A copy of this permit, including all referenced maps, drawings and special conditions, must be available for inspection by the Department at all times at the project site or facility. Failure to produce a copy of the permit upon request by a Department representative is a violation of this permit.

2. **Relationship of this Permit to Other Department Orders and Determinations** Unless expressly provided for by the Department, issuance of this permit does not modify, supersede or rescind any order or determination previously issued by the Department or any of the terms, conditions or requirements contained in such order or determination.

3. **Applications For Permit Renewals, Modifications or Transfers** The permittee must submit a separate written application to the Department for permit renewal, modification or transfer of this permit. Such application must include any forms or supplemental information the Department requires. Any renewal, modification or transfer granted by the Department must be in writing. Submission of applications for permit renewal, modification or transfer are to be submitted to:

Regional Permit Administrator
NYSDEC REGION 2 HEADQUARTERS
47-40 21ST ST
LONG ISLAND CITY, NY11101 -5407

4. **Submission of Renewal Application** The permittee must submit a renewal application at least 30 days before permit expiration for the following permit authorizations: Long Island Well.

5. **Permit Modifications, Suspensions and Revocations by the Department** The Department reserves the right to modify, suspend or revoke this permit. The grounds for modification, suspension or revocation include:

a. materially false or inaccurate statements in the permit application or supporting papers:

b. failure by the permittee to comply with any terms or conditions of the permit:

c. exceeding the scope of the project as described in the permit application:

d. newly discovered material information or a material change in environmental conditions, relevant

technology or applicable law or regulations since the issuance of the existing permit;

e. noncompliance with previously issued permit conditions, orders of the commissioner, any provisions of the Environmental Conservation Law or regulations of the Department related to the permitted activity.

6. **Permit Transfer** Permits are transferrable unless specifically prohibited by statute, regulation or another permit condition. Applications for permit transfer should be submitted prior to actual transfer of ownership.

NOTIFICATION OF OTHER PERMITTEE OBLIGATIONS

Item A: Permittee Accepts Legal Responsibility and Agrees to Indemnification
The permittee, excepting state or federal agencies, expressly agrees to indemnify and hold harmless the Department of Environmental Conservation of the State of New York, its representatives, employees, and agents ("DEC") for all claims, suits, actions, and damages, to the extent attributable to the permittee's acts or omissions in connection with the permittee's undertaking of activities in connection with, or operation and maintenance of, the facility or facilities authorized by the permit whether in compliance or not in compliance with the terms and conditions of the permit. This indemnification does not extend to any claims, suits, actions, or damages to the extent attributable to DEC's own negligent or intentional acts or omissions, or to any claims, suits, or actions naming the DEC and arising under Article 78 of the New York Civil Practice Laws and Rules or any citizen suit or civil rights provision under federal or state laws.

Item B: Permittee's Contractors to Comply with Permit
The permittee is responsible for informing its independent contractors, employees, agents and assigns of their responsibility to comply with this permit, including all special conditions while acting as the permittee's agent with respect to the permitted activities, and such persons shall be subject to the same sanctions for violations of the Environmental Conservation Law as those prescribed for the permittee.

Item C: Permittee Responsible for Obtaining Other Required Permits
The permittee is responsible for obtaining any other permits, approvals, lands, easements and rights-of-way that may be required to carry out the activities that are authorized by this permit.

Item D: No Right to Trespass or Interfere with Riparian Rights
This permit does not convey to the permittee any right to trespass upon the lands or interfere with the riparian rights of others in order to perform the permitted work nor does it authorize the impairment of any rights, title, or interest in real or personal property held or vested in a person not a party to the permit.

95-20-1 (11/03) -9d

New York State
Department of Environmental Conservation

NOTICE

The Department of Environmental Conservation (DEC) has issued permit(s) pursuant to the Environmental Conservation Law for work being conducted at this site. For further information regarding the nature and extent of the approved work and any Department conditions applied to the approval, contact the Regional Permit Administrator listed below. Please refer to the permit number shown when contacting the DEC.

Permit Number 2-6304-01440/00007

Expiration Date 12/31/2010

Regional Permit Administrator

John F. Cryan
47-40 21st Street
LIC, NY 11101
(718) 482-4997

NOTE: This notice is **NOT** a permit

STV

July 12, 2010

Mr. Rafael Ketani, MS, CPG
NYS Department of Environmental Conservation
Hunters Point Plaza
47-40 21st Street
Long Island City, New York, NY 11101-5401

Reference: **Borden Avenue Bridge over Dutch Kills**
NYSDEC Spills No. 0903437
Treatment System Demobilization

Dear Mr. Ketani:

This letter serves as an update to the emergency reconstruction of the Borden Avenue Bridge site and the above-referenced spill case.

Dewatering of the cofferdam continues while construction progresses within the cofferdam. Currently, due to the progress of construction, the dewatering wells are no longer needed and are not in use. The water that is currently being pumped within the cofferdam and treated is surface water that seeps through the steel sheeting. .

To assess the water quality and whether the current filtration system is still needed, an influent water sample was collected from within the cofferdam prior to its entering the treatment system on Thursday, June 24, 2010. Attachment A provides the laboratory data report for the influent water sample. The sample was analyzed for the same parameters as the treated effluent samples and the data was compared to the Wastewater Limits for Surface Water Discharges specified in the Corrective Action Plan and Stipulation Agreement for this project. All parameter concentrations were below the Wastewater Limits for Surface Water Discharges specified. As a result, operation of the water treatment system is scheduled to be discontinued and the system dismantled during the week of July 12, 2010. However, the settling tank that was required in the original NYSDEC permit will remain in use as part of the dewatering operation.

In addition, discharge samples will no longer be collected as excavation within the cofferdam is completed, deep well dewatering is no longer necessary, and the current discharge to the Dutch Kills is limited to surface water only.

If you have any questions or comments, please contact me at 212-614-3412.

Sincerely,

Donald P. Hessemer

Donald P. Hessemer, CHMM
Senior Project Manager

cc: Beatrice Duran, NYCDOT
John Kurre, P.E., NYCDOT
Harold Palmer, HAKS

AN EMPLOYEE-OWNED COMPANY PROVIDING QUALITY SERVICE SINCE 1912 | 225 PARK AVENUE SOUTH
NEW YORK, NEW YORK 10003-1604
(212) 777-4400 FAX: (212) 529-5237

New York State Department of Environmental Conservation
Division of Environmental Permits, Region 2
47-40 21st Street, Long Island City, NY 11101-5407
Phone: (718) 482-4997 • **Fax:** (718) 482-4975
Website: www.dec.ny.gov

January 11, 2011

Donald P. Hessemer
STV Incorporated
225 Park Avenue South
New York, NY 10003-1604

Re: NYSDEC Permit No. 2-6304-01440/00004
NYC Dept. Of Transportation
Borden Avenue Bridge over Dutch Kills
Borden Avenue between 27th Street & Review Avenue
Queens, New York
6NYCRR Part 608 - Water Quality Certification
NYCRR Part 661 - Tidal Wetlands
ECL Article 15 - Protection of Waters
NOTICE OF PERMIT RENEWAL

Dear Mr. Hessemer:

In response to your request, please be advised that the expiration date of the above referenced permit has been extended to December 31, 2011. Your renewed permit is attached. Please read it carefully. Compliance with all permit conditions is required.

All other terms, specifications and conditions of the permit remain as previously written on January 26, 2010.

If you have any technical questions concerning the permit please contact Jesselynne Krief in the NYSDEC Bureau of Marine Resources at 718 482-6464. Administrative questions should be directed to Tammy Greco in the NYSDEC Division of Environmental Permits at 718 482-4997.

Sincerely,

Harold J. Dickey
Deputy Regional Permit Administrator

cc: NYC Dept. Of Transportation
NYSDEC Marine Resources
NYSDEC Law Enforcement

40 years of stewardship 1970-2010

NEW YORK STATE DEPARTMENT OF ENVIRONMENTAL CONSERVATION
Facility DEC ID 2-6304-01440

PERMIT

Under the Environmental Conservation Law (ECL)

Permittee and Facility Information

Permit Issued To:
NYC DEPT OF TRANSPORTATION
40 WORTH ST 11TH FL
NEW YORK, NY 10003
(212) 676-0557

Facility:
NYC DOT - BORDEN AVE BRIDGE
BORDEN AVE BTWN 25TH & 27TH ST
LONG ISLAND CITY, NY 11101

Facility Location: in QUEENS COUNTY **Village:** Long Island City
Facility Principal Reference Point: NYTM-E: 589.262 NYTM-N: 4510.311
Latitude: 41°44'20.1" Longitude: 74°56'34.1"
Project Location: Repair / Replace West Bridge Abutment
Authorized Activity: Repair / replace west bridge abutment.

Permit Authorizations

Tidal Wetlands - Under Article 25
Permit ID 2-6304-01440/00004
Renewal Effective Date: 1/11/2011 Expiration Date: 12/31/2011
Water Quality Certification - Under Section 401 - Clean Water Act
Permit ID 2-6304-01440/00005
Renewal Effective Date: 1/11/2011 Expiration Date: 12/31/2011
Excavation & Fill in Navigable Waters - Under Article 15, Title 5
Permit ID 2-6304-01440/00006
Renewal Effective Date: 1/11/2011 Expiration Date: 12/31/2011

NYSDEC Approval

By acceptance of this permit, the permittee agrees that the permit is contingent upon strict compliance with the ECL, all applicable regulations, and all conditions included as part of this permit.

Permit Administrator: HAROLD J DICKEY, Deputy Regional Permit Administrator
Address: NYSDEC REGION 2 HEADQUARTERS
47-40 21ST ST
LONG ISLAND CITY, NY 11101 -5407

Authorized Signature: _____ Date 1 / 11 / 11

Permit Components

NATURAL RESOURCE PERMIT CONDITIONS

WATER QUALITY CERTIFICATION SPECIFIC CONDITION

GENERAL CONDITIONS, APPLY TO ALL AUTHORIZED PERMITS

NOTIFICATION OF OTHER PERMITTEE OBLIGATIONS

NATURAL RESOURCE PERMIT CONDITIONS - Apply to the Following Permits: TIDAL WETLANDS; WATER QUALITY CERTIFICATION; EXCAVATION & FILL IN NAVIGABLE WATERS

1. **Conformance With Plans** All activities authorized by this permit must be in strict conformance with the approved plans submitted by the applicant or applicant's agent as part of the permit application. Such approved plans were prepared by STV Incorporated & Ground Water Treatment & technology for the City of New York Department of Transportation - Division of Bridges.

2. **Conformance with Plans - Addenda** In addition to plans referenced in the Condition titled "Conformance with Plans," the activities authorized by this permit must be in strict conformance with the following approved plans and/or submissions made as part of the permit application:

a. Plans prepared by STV Incorporated for the City of New York Department of Transportation Division of Bridges contract no. HBQ1162E entitled: "Emergency Reconstruction of West Abutment and Wingwalls of Borden Avenue Bridge over Dutch Kills", SHEETS 8, 18, 67R, 71R, 72R, 75R, 78R, 82, 83, 88, 94R, 96, 97, 99 and 103 dated Nov 20, 2009, received by NYS DEC on Nov 16, 2009.

b. Plans prepared by STV Incorporated for the City of New York Department of Transportation Division of Bridges contract no. HBQ1162E entitled: "Emergency reconstruction of West Abutment and Wingwalls of Borden Avenue Bridge of Dutch Kills", Sheet 98 dated December 29, 2009, received by NYS DEC on January 12, 2010.

The location of the Water treatment system and treatment system details must be consistent with the plans and information included in the CAP approved by DEC on August 31, 2009.

3. **Mitigation Plan** Permittee must provide a Mitigation Plan that allows for the removal of approximately 75 cubic yards of debris/material from the Dutch Kills shoreline as well as the stabilization of disturbed areas on either side of the replaced bridge abutment. The stabilization design must result in no increase of net fill in the waterway and a shoreline with a proposed slope no further seaward than the existing slope. Within ninety (90) days of permit issuance, the Permittee must submit for review and approval a proposed Mitigation Plan to NYSDEC Bureau of Marine Resources, 47-40 21st Street, Long Island City, New York 11101 (Attention: Jesse Krief). The Mitigation Plan must include a location, a detailed description of the project, and a time schedule for the mitigation project as well as permission from adjacent land owners for all work proposed on adjacent properties not owned by NYCDOT. The Mitigation Plan must be of sufficient detail and substance that it can be accepted by DEC with minimal revision. Within two (2) weeks of receiving comments to the proposed Mitigation Plan, Permittee must submit a revised proposed Mitigation Plan incorporating DEC's comments. Upon approval of the proposed Mitigation Plan Permittee must complete the Mitigation Plan pursuant to the

approved schedule or, if no schedule is approved, without delay. Permittee may contact Jesse Krief in the NYSDEC Bureau of Marine Resources at (718) 482-6464 with any questions concerning the Mitigation Plan.

4. **Removal of Temporary Structures** Within sixty (60) days of the completion of the abutment reconstruction activities all temporary structures installed to facilitate the reconstruction must be removed in their entirety. After removal is complete all areas must be restored to original grades using only clean/natural fill and stabilized. Temporary structures to be removed include the sediment staging area, the temporary flume, outfall pipe and baffle, temporary timber pontoon bridge and landings.

5. **HDPE Geomembrane Liner Requirements** Installation of a continuous 60 MIL HDPE geomembrane liner must be installed over all oil contaminated sediment within the cofferdam surrounding the bridge abutment, and on slopes that expose similarly oil contaminated sediment. A one (1) foot minimum cushioning layer must be installed on either side of the liner in order to prevent puncturing. All liner panels must be hot welded together with at least a six (6) inch overlap. All edges of the geomembrane panels adjacent to the bridge abutment must be sealed to the bridge abutment. All liner edges not adjacent to the abutment must be buried in an anchoring trench. Where space is limited and an anchoring trench is not possible liner edges must be left flat and carefully covered with backfill.

6. **Timber Fender Replacement** The replacement of the timber fender system is limited to areas where the fender existed prior to removal of the abutment and must be attached directly to the abutment face as shown on the project plans referenced in Natural Resources Permit Condition 2, specifically sheets 8, 18 and 94R.

7. **Notice of Intent to Commence Work** At least five (5) days prior to commencement of the permitted activity, Permittee must complete and submit the attached "Notice of Intent to Commence Work" to NYSDEC Bureau of Marine Resources, 47-40 21st Street, Long Island City, New York 11101 (Attention: Jesselynne Krief).

8. **Post Permit Sign** The permit sign enclosed with this permit shall be posted in a conspicuous location on the worksite and adequately protected from the weather.

9. **Post Construction Photographs** Within 30 days of the completion of work authorized by this permit, Permittee must provide post-construction photographs of the work area to: NYSDEC Bureau of Marine Resources, 47-40 21st Street, Long Island City, New York 11101 (Attention: Jesse Krief).

10. **Best Management Practices** Best management practices must be employed to prevent the loss of construction materials, debris, and sediment from entering the waterways. Such practices may include, but are not limited to silt fencing, hay bales, floating booms, and oil capture systems. At minimum a floating boom with attached silt curtain must be installed encircling the entire project site for both the preliminary inspection of the relieving platform and for the duration of the project.

11. **Precautions Against Contamination of Waters** All necessary precautions shall be taken to preclude contamination of any wetland or waterway by suspended solids, sediments, fuels, solvents, lubricants, epoxy coatings, paints, concrete, leachate or any other environmentally deleterious materials associated with the project.

12. **Discharge to Tidal Wetlands Prohibited** There must be no discharge of runoff or other effluent over or through any abutment wall or shoreline stabilization structure or into any tidal wetland or tidal wetlands adjacent area (unless specifically authorized by this permit).

13. **Water Treatment** All waters discharged into the Dutch Kills resulting from the dewatering activities associated with this project must first undergo treatment as described in the Corrective Action Plan approved by NYSDEC on August 31, 2009. The location of the treatment system must also remain consistent with the CAP. All effluent must be discharged into areas of the Dutch Kills with water depths greater than 4 feet at mean low water.

14. **Concrete/ Leachate Discharges Prohibited** During construction, concrete or leachate must not escape or be discharged. Washings from transit mix trucks, mixers, or other devices must not enter tidal wetlands and or protected buffer areas.

15. **Excavate Backfill Prior to Removal of Abutment** Prior to any construction or removal of the abutment and other shoreline stabilization structures all backfill must be excavated landward of the abutment and retained so as not to enter the waterway, tidal wetland or protected buffer area.

16. **Construct Abutment Prior to Fill Placement** Reconstruction or repair of the west abutment wall must be completed prior to placement of any fill material on either side of this structure.

17. **Installation of Cofferdam & Sheeting Protection Prior to Excavation** All cofferdams and protective sheeting functioning as the seaward project boundaries must be installed prior to excavation and removal of existing structures and fill immediately landward of such structures.

18. **Cofferdam Removal** Within (30) of the completion of the abutment wall reconstruction, all cofferdams, protective sheeting and associated bracing structures installed seaward of the abutment wall must be pulled in their entirety.

19. **No Weep Holes** The construction of weep holes in the abutment wall is strictly prohibited.

20. **Discharge of Effluent Obtained Through Excavation of Material** The effluent discharged from the water treatment system into the Dutch Kills Creek must not contain a visible contrast to the receiving water. If the effluent bears a substantial visible contrast to the receiving waters, discharging must cease and the water must be reintroduced back into the head of the treatment system until no visible contrast is seen.

21. **No Equipment Below High Water** Equipment operation below apparent high water is strictly prohibited.

22. **Dewatering** All sediment removed from within the excavation area must be dewatered within the confines of the concrete pad located in the sediment staging area shown on project plans referenced in Natural Resource Permit Condition 2. All effluent must be transported to and incorporated into the treatment system.

23. **Storage of Construction Equipment & Materials** The storage of construction equipment and materials must be confined to within the project work site and or upland areas greater than 35 linear feet from the tidal wetland boundary and outside the area of excavation.

24. **Disposal of Excavated Material** All dredged material must be retained so as to not re-enter any water body, tidal wetland, or protected buffer area and be disposed of at an upland site approved to accept petroleum contaminated sediments. Excavated sediments from within the cofferdam area must be placed directly into a conveyance vehicle for transportation to the stockpile area. The sidecasting (double

dipping) or temporary storage of excavated material is prohibited.

25. **Prohibited Treated Wood** Use of wood treated with creosote is prohibited. Wood treated with Pentachlorophenol (PCP) must not be used in wetlands or surface waters. Standard pressure treated lumber with CCA and its use is permitted.

26. **Use of wood Preservatives** Pressure treated wood used for construction of in-water structures must have been treated with a preservative and must have undergone a treatment process approved (stamped or otherwise marked as certified) by the American Wood Preservative Association.

Chromated Copper Arsenate (CCA) pressure treated wood must be clean and free of CCA surface deposits. Wood with surface deposits must be washed for at least 5 minutes under running water prior to use. (Note the following condition for the handling of wash water.)

Any wood debris such as sawdust or wash water must not enter any water body, including wetlands, or protected buffer areas. Field application of CCA is strictly prohibited.

27. **Debris Removal** Should any demolition or construction debris fall into the waterway or enter the tidal wetlands, it must be removed immediately.

28. **Debris Disposal** Any debris or excess material from construction of this project will be completely removed from the adjacent area (upland) and removed to an approved upland area for disposal. No debris is permitted in tidal wetlands or tidal wetlands adjacent area or protected buffer areas. All demolition and construction debris must be properly disposed of at a licensed facility.

29. **Clean Fill Material Only** All fill material must consist of "clean" sand, gravel, or soil. The use of material such as asphalt, slag, fly-ash, recycled concrete aggregate (RCA), broken concrete, or demolition debris is strictly prohibited.

30. **Containment of Disturbed Soils** All disturbed areas where soil will be temporarily exposed or stockpiled for longer than one (1) week must be contained by a continuous line of staked hay bales/silt curtain (or other NYSDEC approved method) placed on the seaward side between the fill and wetland or protected buffer area. Tarps are authorized to supplement these approved methods.

31. **No Interference With Navigation** There shall be no unreasonable interference with navigation by the work herein authorized.

32. **Prior Approval of Changes** If the Permittee desires to make any changes in construction techniques, species to be planted, the site plan, any mitigation plan, scheduling or staging of construction, or any other aspect of this project, the Permittee shall submit a written request to the Regional Permit Administrator to make such proposed changes and shall not make such changes unless authorized in writing by the Department.

33. **Minimize Adverse Impacts to Wetlands, Wildlife, Water** All work must be performed in a manner which minimizes adverse impacts to wetlands, wildlife, water quality and natural resources.

34. **Failure to Meet Permit Conditions** Failure of the permittee to meet all the conditions of this permit is a violation of this permit and grounds for an order to immediately cease the permitted activity at the project site.

35. **State May Require Site Restoration** If upon the expiration or revocation of this permit, the project hereby authorized has not been completed, the applicant shall, without expense to the State, and to such extent and in such time and manner as the Department of Environmental Conservation may require, remove all or any portion of the uncompleted structure or fill and restore the site to its former condition. No claim shall be made against the State of New York on account of any such removal or alteration.

36. **State May Order Removal or Alteration of Work** If future operations by the State of New York require an alteration in the position of the structure or work herein authorized, or if, in the opinion of the Department of Environmental Conservation it shall cause unreasonable obstruction to the free navigation of said waters or flood flows or endanger the health, safety or welfare of the people of the State, or cause loss or destruction of the natural resources of the State, the owner may be ordered by the Department to remove or alter the structural work, obstructions, or hazards caused thereby without expense to the State, and if, upon the expiration or revocation of this permit, the structure, fill, excavation, or other modification of the watercourse hereby authorized shall not be completed, the owners, shall, without expense to the State, and to such extent and in such time and manner as the Department of Environmental Conservation may require, remove all or any portion of the uncompleted structure or fill and restore to its former condition the navigable and flood capacity of the watercourse. No claim shall be made against the State of New York on account of any such removal or alteration.

37. **State Not Liable for Damage** The State of New York shall in no case be liable for any damage or injury to the structure or work herein authorized which may be caused by or result from future operations undertaken by the State for the conservation or improvement of navigation, or for other purposes, and no claim or right to compensation shall accrue from any such damage.

WATER QUALITY CERTIFICATION SPECIFIC CONDITIONS

1. **Water Quality Certification** The NYS Department of Environmental Conservation hereby certifies that the subject project will not contravene effluent limitations or other limitations or standards under Sections 301, 302, 303, 306 and 307 of the Clean Water Act of 1977 (PL 95-217) provided that all of the conditions listed herein are met.

GENERAL CONDITIONS - Apply to ALL Authorized Permits:

1. **Facility Inspection by The Department** The permitted site or facility, including relevant records, is subject to inspection at reasonable hours and intervals by an authorized representative of the Department of Environmental Conservation (the Department) to determine whether the permittee is complying with this permit and the ECL. Such representative may order the work suspended pursuant to ECL 71- 0301 and SAPA 401(3).

The permittee shall provide a person to accompany the Department's representative during an inspection to the permit area when requested by the Department.

A copy of this permit, including all referenced maps, drawings and special conditions, must be available for inspection by the Department at all times at the project site or facility. Failure to produce a copy of

the permit upon request by a Department representative is a violation of this permit.

2. **Relationship of this Permit to Other Department Orders and Determinations** Unless expressly provided for by the Department, issuance of this permit does not modify, supersede or rescind any order or determination previously issued by the Department or any of the terms, conditions or requirements contained in such order or determination.

3. **Applications For Permit Renewals, Modifications or Transfers** The permittee must submit a separate written application to the Department for permit renewal, modification or transfer of this permit. Such application must include any forms or supplemental information the Department requires. Any renewal, modification or transfer granted by the Department must be in writing. Submission of applications for permit renewal, modification or transfer are to be submitted to:

Regional Permit Administrator
NYSDEC REGION 2 HEADQUARTERS
47-40 21ST ST
LONG ISLAND CITY, NY11101 -5407

4. **Submission of Renewal Application** The permittee must submit a renewal application at least 30 days before permit expiration for the following permit authorizations: Excavation & Fill in Navigable Waters, Tidal Wetlands, Water Quality Certification.

5. **Permit Modifications, Suspensions and Revocations by the Department** The Department reserves the right to modify, suspend or revoke this permit. The grounds for modification, suspension or revocation include:

a. materially false or inaccurate statements in the permit application or supporting papers;

b. failure by the permittee to comply with any terms or conditions of the permit;

c. exceeding the scope of the project as described in the permit application;

d. newly discovered material information or a material change in environmental conditions, relevant technology or applicable law or regulations since the issuance of the existing permit;

e. noncompliance with previously issued permit conditions, orders of the commissioner, any provisions of the Environmental Conservation Law or regulations of the Department related to the permitted activity.

6. **Permit Transfer** Permits are transferrable unless specifically prohibited by statute, regulation or another permit condition. Applications for permit transfer should be submitted prior to actual transfer of ownership.

NOTIFICATION OF OTHER PERMITTEE OBLIGATIONS

Item A: Permittee Accepts Legal Responsibility and Agrees to Indemnification
The permittee, excepting state or federal agencies, expressly agrees to indemnify and hold harmless the

Department of Environmental Conservation of the State of New York, its representatives, employees, and agents ("DEC") for all claims, suits, actions, and damages, to the extent attributable to the permittee's acts or omissions in connection with the permittee's undertaking of activities in connection with, or operation and maintenance of, the facility or facilities authorized by the permit whether in compliance or not in compliance with the terms and conditions of the permit. This indemnification does not extend to any claims, suits, actions, or damages to the extent attributable to DEC's own negligent or intentional acts or omissions, or to any claims, suits, or actions naming the DEC and arising under Article 78 of the New York Civil Practice Laws and Rules or any citizen suit or civil rights provision under federal or state laws.

Item B: Permittee's Contractors to Comply with Permit
The permittee is responsible for informing its independent contractors, employees, agents and assigns of their responsibility to comply with this permit, including all special conditions while acting as the permittee's agent with respect to the permitted activities, and such persons shall be subject to the same sanctions for violations of the Environmental Conservation Law as those prescribed for the permittee.

Item C: Permittee Responsible for Obtaining Other Required Permits
The permittee is responsible for obtaining any other permits, approvals, lands, easements and rights-of-way that may be required to carry out the activities that are authorized by this permit.

Item D: No Right to Trespass or Interfere with Riparian Rights
This permit does not convey to the permittee any right to trespass upon the lands or interfere with the riparian rights of others in order to perform the permitted work nor does it authorize the impairment of any rights, title, or interest in real or personal property held or vested in a person not a party to the permit.

NOTICE OF INTENT TO COMMENCE WORK

Date: _____

NYSDEC Marine Resources
Attn. Jesse Krief
N.Y.S.D.E.C Region 2 Office
47-40 21st Street
Long Island City, N.Y. 11101

Re: NYSDEC Permit No. 2-6304-01440/00004
NYC Dept. Of Transportation
Borden Avenue bridge over Dutch Kills
Borden Avenue between 27th Street & Review Avenue
Queens, New York

Dear Ms. Krief:

In accordance with Natural Resource Condition 7 of the referenced permit, I hereby serve notice to commence work on _____, 200____.

This is also to certify that, having read this entire permit, I am fully aware of and understand the general and special conditions therein, and agree to comply with all such conditions. I further understand that prior to undertaking any modification to the subject work, I must seek and receive written approval of the NYSDEC Regional Permit Administrator.

_____
Signature of Permittee

_____
Name of Permittee (please print)

_____
Signature of Contractor

_____
Name of Contractor (please print)

_____
Street Address of Contractor

_____
City, State, & Zip Code of Contractor

_____
Telephone Number of Contractor

WARNING

The permittee and his contractor (if any) are required to follow all permit conditions. Violations of the permit may lead to legal action, including the imposition of substantial monetary fines and corrective work.

cc: NYSDEC Environmental Permits

95-20-1 (11/03) -9d

New York State
Department of Environmental Conservation

NOTICE

The Department of Environmental Conservation (DEC) has issued permit(s) pursuant to the Environmental Conservation Law for work being conducted at this site. For further information regarding the nature and extent of the approved work and any Department conditions applied to the approval, contact the Regional Permit Administrator listed below. Please refer to the permit number shown when contacting the DEC.

Permit Number 2-6304-01440/00004

Expiration Date December 31, 2011

Regional Permit Administrator
John F. Cryan
47-40 21st Street
LIC, NY 11101
(718) 482-4997

NOTE: This notice is **NOT** a permit

STV

July 12, 2010

Mr. Rafael Ketani, MS, CPG
NYS Department of Environmental Conservation
Hunters Point Plaza
47-40 21st Street
Long Island City, New York, NY 11101-5401

Reference: **Borden Avenue Bridge over Dutch Kills**
NYSDEC Spills No. 0903437
Treatment System Demobilization

Dear Mr. Ketani:

This letter serves as an update to the emergency reconstruction of the Borden Avenue Bridge site and the above-referenced spill case.

Dewatering of the cofferdam continues while construction progresses within the cofferdam. Currently, due to the progress of construction, the dewatering wells are no longer needed and are not in use. The water that is currently being pumped within the cofferdam and treated is surface water that seeps through the steel sheeting. .

To assess the water quality and whether the current filtration system is still needed, an influent water sample was collected from within the cofferdam prior to its entering the treatment system on Thursday, June 24, 2010. Attachment A provides the laboratory data report for the influent water sample. The sample was analyzed for the same parameters as the treated effluent samples and the data was compared to the Wastewater Limits for Surface Water Discharges specified in the Corrective Action Plan and Stipulation Agreement for this project. All parameter concentrations were below the Wastewater Limits for Surface Water Discharges specified. As a result, operation of the water treatment system is scheduled to be discontinued and the system dismantled during the week of July 12, 2010. However, the settling tank that was required in the original NYSDEC permit will remain in use as part of the dewatering operation.

In addition, discharge samples will no longer be collected as excavation within the cofferdam is completed, deep well dewatering is no longer necessary, and the current discharge to the Dutch Kills is limited to surface water only.

If you have any questions or comments, please contact me at 212-614-3412.

Sincerely,

Donald P. Hessemer

Donald P. Hessemer, CHMM
Senior Project Manager

cc: Beatrice Duran, NYCDOT
John Kurre, P.E., NYCDOT
Harold Palmer, HAKS

225 PARK AVENUE SOUTH
NEW YORK, NEW YORK 10003-1604
(212) 777-4400 FAX: (212) 529-5237

Alan Marchan, P.E., STV
Kedari Reddy, NYCDOT

Attachment: A – Laboratory Data Report (Influent Sample 06-24-10)

Attachment A

Laboratory Data Report (Influent Sample 06-24-10)

ALPHA ANALYTICAL

ANALYTICAL REPORT

Lab Number:	L1009532
Client:	Environmental Planning and Management 1983 Marcus Avenue Suite 109 Lake Success, NY 11042
ATTN:	Rick Hart
Phone:	(516) 328-1194
Project Name:	BORDEN AVE
Project Number:	29007
Report Date:	07/02/10

Certifications & Approvals: MA (M-MA086), NY NELAC (11148), CT (PH-0574), NH (2003), NJ (MA935), RI (LAO00065), ME (MA0086), PA (Registration #68-03671), USDA (Permit #S-72578), US Army Corps of Engineers, Naval FESC.

Eight Walkup Drive, Westborough, MA 01581-1019
508-898-9220 (Fax) 508-898-9193 800-624-9220 - www.alphalab.com

Project Name: BORDEN AVE
Project Number: 29007

Lab Number: L1009532
Report Date: 07/02/10

Alpha Sample ID	Client ID	Sample Location	Collection Date/Time
L1009532-01	BAINF062410	2323 BORDEN AVE	06/24/10 07:45

Project Name: BORDEN AVE
Project Number: 29007

Lab Number: L1009532
Report Date: 07/02/10

Case Narrative

The samples were received in accordance with the Chain of Custody and no significant deviations were encountered during the preparation or analysis unless otherwise noted. Sample Receipt, Container Information, and the Chain of Custody are located at the back of the report.

Results contained within this report relate only to the samples submitted under this Alpha Lab Number and meet all of the requirements of NELAC, for all NELAC accredited parameters. The data presented in this report is organized by parameter (i.e. VOC, SVOC, etc.). Sample specific Quality Control data (i.e. Surrogate Spike Recovery) is reported at the end of the target analyte list for each individual sample, followed by the Laboratory Batch Quality Control at the end of each parameter. If a sample was re-analyzed or re-extracted due to a required quality control corrective action and if both sets of data are reported, the Laboratory ID of the re-analysis or re-extraction is designated with an "R" or "RE", respectively. When multiple Batch Quality Control elements are reported (e.g. more than one LCS), the associated samples for each element are noted in the grey shaded header line of each data table. Any Laboratory Batch, Sample Specific % recovery or RPD value that is outside the listed Acceptance Criteria is bolded in the report. Definitions of all data qualifiers and acronyms used in this report are provided in the Glossary located at the back of the report.

Please see the associated ADEx data file for a comparison of laboratory reporting limits that were achieved with the regulatory Numerical Standards requested on the Chain of Custody.

For additional information, please contact Client Services at 800-624-9220.

Sample "BAINF062410" was received without the container for pH analysis. An aliquot was taken from an unpreserved container.

I, the undersigned, attest under the pains and penalties of perjury that, to the best of my knowledge and belief and based upon my personal inquiry of those responsible for providing the information contained in this analytical report, such information is accurate and complete. This certificate of analysis is not complete unless this page accompanies any and all pages of this report.

Authorized Signature: Michelle M. Morris

Title: Technical Director/Representative

Date: 07/02/10

ORGANICS

VOLATILES

Project Name: BORDEN AVE
Project Number: 29007

Lab Number: L1009532
Report Date: 07/02/10

SAMPLE RESULTS

Lab ID: L1009532-01
Client ID: BAINF062410
Sample Location: 2323 BORDEN AVE
Matrix: Water
Analytical Method: 5,624
Analytical Date: 06/25/10 16:40
Analyst: TT

Date Collected: 06/24/10 07:45
Date Received: 06/24/10
Field Prep: Not Specified

Parameter	Result	Qualifier	Units	RL	MDL	Dilution Factor
Volatile Organics by GC/MS - Westborough Lab						
Benzene	ND		ug/l	1.0	--	1
Toluene	ND		ug/l	1.0	--	1
Ethylbenzene	ND		ug/l	1.0	--	1
p/m-Xylene	ND		ug/l	2.0	--	1
o-xylene	ND		ug/l	1.0	--	1
Xylene (Total)	ND		ug/l	2.0	--	1
Methyl tert butyl ether	ND		ug/l	10	--	1

Surrogate	% Recovery	Qualifier	Acceptance Criteria
Pentafluorobenzene	97		80-120
Fluorobenzene	102		80-120
4-Bromofluorobenzene	102		80-120

Project Name: BORDEN AVE
Project Number: 29007

Lab Number: L1009532
Report Date: 07/02/10

Method Blank Analysis
Batch Quality Control

Analytical Method: 5,624
Analytical Date: 06/25/10 09:22
Analyst: TT

Parameter	Result	Qualifier	Units	RL	MDL
Volatile Organics by GC/MS - Westborough Lab for sample(s): 01 Batch: WG419849-2					
Methylene chloride	ND		ug/l	5.0	--
1,1-Dichloroethane	ND		ug/l	1.5	--
Chloroform	ND		ug/l	1.5	--
Carbon tetrachloride	ND		ug/l	1.0	--
1,2-Dichloropropane	ND		ug/l	3.5	--
Dibromochloromethane	ND		ug/l	1.0	--
1,1,2-Trichloroethane	ND		ug/l	1.5	--
2-Chloroethylvinyl ether	ND		ug/l	10	--
Tetrachloroethene	ND		ug/l	1.5	--
Chlorobenzene	ND		ug/l	3.5	--
Trichlorofluoromethane	ND		ug/l	5.0	--
1,2-Dichloroethane	ND		ug/l	1.5	--
1,1,1-Trichloroethane	ND		ug/l	2.0	--
Bromodichloromethane	ND		ug/l	1.0	--
trans-1,3-Dichloropropene	ND		ug/l	1.5	--
cis-1,3-Dichloropropene	ND		ug/l	1.5	--
Bromoform	ND		ug/l	1.0	--
1,1,2,2-Tetrachloroethane	ND		ug/l	1.0	--
Benzene	ND		ug/l	1.0	--
Toluene	ND		ug/l	1.0	--
Ethylbenzene	ND		ug/l	1.0	--
Chloromethane	ND		ug/l	10	--
Bromomethane	ND		ug/l	5.0	--
Vinyl chloride	ND		ug/l	2.0	--
Chloroethane	ND		ug/l	2.0	--
1,1-Dichloroethene	ND		ug/l	1.0	--
trans-1,2-Dichloroethene	ND		ug/l	1.5	--
cis-1,2-Dichloroethene	ND		ug/l	1.0	--
Trichloroethene	ND		ug/l	1.0	--
1,2-Dichlorobenzene	ND		ug/l	5.0	--
1,3-Dichlorobenzene	ND		ug/l	5.0	--

Project Name: BORDEN AVE
Project Number: 29007

Lab Number: L1009532
Report Date: 07/02/10

Method Blank Analysis
Batch Quality Control

Analytical Method: 5,624
Analytical Date: 06/25/10 09:22
Analyst: TT

Parameter	Result	Qualifier	Units	RL	MDL
Volatile Organics by GC/MS - Westborough Lab for sample(s): 01 Batch: WG419849-2					
1,4-Dichlorobenzene	ND		ug/l	5.0	--
p/m-Xylene	ND		ug/l	2.0	--
o-xylene	ND		ug/l	1.0	--
Xylene (Total)	ND		ug/l	2.0	--
Styrene	ND		ug/l	1.0	--
Acetone	ND		ug/l	10	--
Carbon disulfide	ND		ug/l	5.0	--
2-Butanone	ND		ug/l	10	--
Vinyl acetate	ND		ug/l	20	--
4-Methyl-2-pentanone	ND		ug/l	10	--
2-Hexanone	ND		ug/l	10	--
Acrolein	ND		ug/l	8.0	--
Acrylonitrile	ND		ug/l	10	--
Methyl tert butyl ether	ND		ug/l	10	--
Dibromomethane	ND		ug/l	1.0	--
1,4-Dioxane	ND		ug/l	2000	--
Tert-Butyl Alcohol	ND		ug/l	100	--
Tertiary-Amyl Methyl Ether	ND		ug/l	20	--

Surrogate	%Recovery	Qualifier	Acceptance Criteria
Pentafluorobenzene	99		80-120
Fluorobenzene	99		80-120
4-Bromofluorobenzene	113		80-120

Lab Control Sample Analysis
Batch Quality Control

Project Name: BORDEN AVE
Project Number: 29007

Lab Number: L1009532
Report Date: 07/02/10

Parameter	LCS %Recovery	Qual	LCSD %Recovery	Qual	%Recovery Limits	RPD	Qual	RPD Limits
Volatile Organics by GC/MS - Westborough Lab Associated sample(s): 01 Batch: WG419849-1								
Methylene chloride	96		-		1-221	-		30
1,1-Dichloroethane	102		-		59-155	-		30
Chloroform	104		-		51-138	-		30
Carbon tetrachloride	101		-		70-140	-		30
1,2-Dichloropropane	100		-		1-210	-		30
Dibromochloromethane	105		-		53-149	-		30
1,1,2-Trichloroethane	105		-		52-150	-		30
2-Chloroethylvinyl ether	100		-		1-305	-		30
Tetrachloroethene	116		-		64-148	-		30
Chlorobenzene	116		-		37-160	-		30
Trichlorofluoromethane	91		-		17-181	-		30
1,2-Dichloroethane	100		-		49-155	-		30
1,1,1-Trichloroethane	97		-		52-162	-		30
Bromodichloromethane	108		-		35-155	-		30
trans-1,3-Dichloropropene	94		-		17-183	-		30
cis-1,3-Dichloropropene	98		-		1-227	-		30
Bromoform	102		-		45-169	-		30
1,1,2,2-Tetrachloroethane	105		-		46-157	-		30
Benzene	100		-		37-151	-		30
Toluene	105		-		47-150	-		30
Ethylbenzene	114		-		37-162	-		30

Lab Control Sample Analysis
Batch Quality Control

Project Name: BORDEN AVE
Project Number: 29007

Lab Number: L1009532
Report Date: 07/02/10

Parameter	LCS %Recovery	Qual	LCSD %Recovery	Qual	%Recovery Limits	RPD	Qual	RPD Limits
Volatile Organics by GC/MS - Westborough Lab Associated sample(s): 01 Batch: WG419849-1								
Chloromethane	112		-		1-273	-		30
Bromomethane	95		-		1-242	-		30
Vinyl chloride	88		-		1-251	-		30
Chloroethane	96		-		14-230	-		30
1,1-Dichloroethene	99		-		1-234	-		30
trans-1,2-Dichloroethene	112		-		54-156	-		30
cis-1,2-Dichloroethene	98		-		60-140	-		30
Trichloroethene	106		-		71-157	-		30
1,2-Dichlorobenzene	111		-		18-190	-		30
1,3-Dichlorobenzene	113		-		59-156	-		30
1,4-Dichlorobenzene	110		-		18-190	-		30
p/m-Xylene	110		-		40-160	-		30
o-Xylene	108		-		40-160	-		30
XYLENE (TOTAL)	109		-		40-160	-		30
Styrene	96		-		40-160	-		30
Acetone	81		-		40-160	-		30
Carbon disulfide	98		-		40-160	-		30
2-Butanone	83		-		40-160	-		30
Vinyl acetate	82		-		40-160	-		30
4-Methyl-2-pentanone	86		-		40-160	-		30
2-Hexanone	82		-		40-160	-		30

Lab Control Sample Analysis
Batch Quality Control

Project Name: BORDEN AVE
Project Number: 29007

Lab Number: L1009532
Report Date: 07/02/10

Parameter	LCS %Recovery	Qual	LCSD %Recovery	Qual	%Recovery Limits	RPD	Qual	RPD Limits
Volatile Organics by GC/MS - Westborough Lab Associated sample(s): 01 Batch: WG419849-1								
Acrolein	78		-		40-160	-		30
Acrylonitrile	76		-		40-160	-		30
Dibromomethane	95		-		70-130	-		30

Surrogate	LCS %Recovery	Qual	LCSD %Recovery	Qual	Acceptance Criteria
Pentafluorobenzene	103				80-120
Fluorobenzene	100				80-120
4-Bromofluorobenzene	106				80-120

Matrix Spike Analysis
Batch Quality Control

Project Name: BORDEN AVE
Project Number: 29007

Lab Number: L1009532
Report Date: 07/02/10

Parameter	Native Sample	MS Added	MS Found	MS %Recovery	Qual	MSD Found	MSD %Recovery	Qual	Recovery Limits	RPD	Qual	RPD Limits
Volatile Organics by GC/MS - Westborough Lab Associated sample(s): 01 QC Batch ID: WG419849-3 QC Sample: L1009513-01 Client ID: MS Sample												
Methylene chloride	ND	20	16	80		-	-		1-221	-		30
1,1-Dichloroethane	ND	20	17	87		-	-		59-155	-		30
Chloroform	ND	20	20	98		-	-		51-138	-		30
Carbon tetrachloride	ND	20	21	107		-	-		70-140	-		30
1,2-Dichloropropane	ND	20	19	94		-	-		1-210	-		30
Dibromochloromethane	ND	20	19	96		-	-		53-149	-		30
1,1,2-Trichloroethane	ND	20	18	92		-	-		52-150	-		30
2-Chloroethylvinyl ether	ND	20	16	83		-	-		1-305	-		30
Tetrachloroethene	ND	20	20	102		-	-		64-148	-		30
Chlorobenzene	ND	20	20	100		-	-		37-160	-		30
Trichlorofluoromethane	ND	20	17	84		-	-		17-181	-		30
1,2-Dichloroethane	ND	20	18	91		-	-		49-155	-		30
1,1,1-Trichloroethane	ND	20	20	100		-	-		52-162	-		30
Bromodichloromethane	ND	20	20	100		-	-		35-155	-		30
trans-1,3-Dichloropropene	ND	20	19	93		-	-		17-183	-		30
cis-1,3-Dichloropropene	ND	20	18	92		-	-		1-227	-		30
Bromoform	ND	20	19	94		-	-		45-169	-		30
1,1,2,2-Tetrachloroethane	ND	20	19	95		-	-		46-157	-		30
Benzene	ND	20	18	92		-	-		35-151	-		30
Toluene	ND	20	19	95		-	-		47-150	-		30
Ethylbenzene	ND	20	20	102		-	-		37-162	-		30

Matrix Spike Analysis
Batch Quality Control

Project Name: BORDEN AVE
Project Number: 29007

Lab Number: L1009532
Report Date: 07/02/10

Parameter	Native Sample	MS Added	MS Found	MS %Recovery	Qual	MSD Found	MSD %Recovery	Qual	Recovery Limits	RPD	Qual	RPD Limits
Volatile Organics by GC/MS - Westborough Lab Associated sample(s): 01 QC Batch ID: WG419849-3 QC Sample: L1009513-01 Client ID: MS Sample												
Chloromethane	ND	20	20	102		-	-		1-273	-		30
Bromomethane	ND	20	18	90		-	-		1-242	-		30
Vinyl chloride	ND	20	16	82		-	-		1-251	-		30
Chloroethane	ND	20	17	86		-	-		14-230	-		30
1,1-Dichloroethene	ND	20	18	88		-	-		1-234	-		30
trans-1,2-Dichloroethene	ND	20	23	116		-	-		54-156	-		30
cis-1,2-Dichloroethene	ND	20	18	89		-	-		60-140	-		30
Trichloroethene	ND	20	19	96		-	-		71-157	-		30
1,2-Dichlorobenzene	ND	20	20	98		-	-		18-190	-		30
1,3-Dichlorobenzene	ND	20	20	99		-	-		59-156	-		30
1,4-Dichlorobenzene	ND	20	19	97		-	-		18-190	-		30
p/m-Xylene	ND	40	39	97		-	-		40-160	-		30
o-Xylene	ND	20	19	96		-	-		40-160	-		30
XYLENE (TOTAL)	ND	60	58	97		-	-		40-160	-		30
Styrene	ND	20	17	86		-	-		40-160	-		30
Acetone	ND	50	38	76		-	-		40-160	-		30
Carbon disulfide	ND	20	17	84		-	-		40-160	-		30
2-Butanone	ND	50	37	75		-	-		40-160	-		30
Vinyl acetate	ND	40	30	75		-	-		40-160	-		30
4-Methyl-2-pentanone	ND	50	37	74		-	-		40-160	-		30
2-Hexanone	ND	50	36	73		-	-		40-160	-		30

Matrix Spike Analysis
Batch Quality Control

Project Name: BORDEN AVE
Project Number: 29007

Lab Number: L1009532
Report Date: 07/02/10

Parameter	Native Sample	MS Added	MS Found	MS %Recovery	Qual	MSD Found	MSD %Recovery	Qual	Recovery Limits	RPD	Qual	RPD Limits
Volatile Organics by GC/MS - Westborough Lab Associated sample(s): 01 QC Batch ID: WG419849-3 QC Sample: L1009513-01 Client ID: MS Sample												
Acrolein	ND	40	18	46		-	-		40-160	-		30
Acrylonitrile	ND	40	24	60		-	-		40-160	-		30
Dibromomethane	ND	20	16	78		-	-			-		30

Surrogate	MS % Recovery	MS Qualifier	MSD % Recovery	MSD Qualifier	Acceptance Criteria
4-Bromofluorobenzene	106				80-120
Fluorobenzene	102				80-120
Pentafluorobenzene	101				80-120

Lab Duplicate Analysis
Batch Quality Control

Project Name: BORDEN AVE
Project Number: 29007

Lab Number: L1009532
Report Date: 07/02/10

Parameter	Native Sample	Duplicate Sample	Units	RPD	Qual	RPD Limits
Volatile Organics by GC/MS - Westborough Lab Associated sample(s): 01 QC Batch ID: WG419849-4 QC Sample: L1009513-01 Client ID: DUP Sample						
Methylene chloride	ND	ND	ug/l	NC		30
1,1-Dichloroethane	ND	ND	ug/l	NC		30
Chloroform	ND	ND	ug/l	NC		30
Carbon tetrachloride	ND	ND	ug/l	NC		30
1,2-Dichloropropane	ND	ND	ug/l	NC		30
Dibromochloromethane	ND	ND	ug/l	NC		30
1,1,2-Trichloroethane	ND	ND	ug/l	NC		30
2-Chloroethylvinyl ether	ND	ND	ug/l	NC		30
Tetrachloroethene	ND	ND	ug/l	NC		30
Chlorobenzene	ND	ND	ug/l	NC		30
Trichlorofluoromethane	ND	ND	ug/l	NC		30
1,2-Dichloroethane	ND	ND	ug/l	NC		30
1,1,1-Trichloroethane	ND	ND	ug/l	NC		30
Bromodichloromethane	ND	ND	ug/l	NC		30
trans-1,3-Dichloropropene	ND	ND	ug/l	NC		30
cis-1,3-Dichloropropene	ND	ND	ug/l	NC		30
Bromoform	ND	ND	ug/l	NC		30
1,1,2,2-Tetrachloroethane	ND	ND	ug/l	NC		30
Benzene	ND	ND	ug/l	NC		30

Lab Duplicate Analysis
Batch Quality Control

Project Name: BORDEN AVE
Project Number: 29007

Lab Number: L1009532
Report Date: 07/02/10

Parameter	Native Sample	Duplicate Sample	Units	RPD	RPD Limits
Volatile Organics by GC/MS - Westborough Lab Associated sample(s): 01 QC Batch ID: WG419849-4 QC Sample: L1009513-01 Client ID: DUP Sample					
Toluene	ND	ND	ug/l	NC	30
Ethylbenzene	ND	ND	ug/l	NC	30
Chloromethane	ND	ND	ug/l	NC	30
Bromomethane	ND	ND	ug/l	NC	30
Vinyl chloride	ND	ND	ug/l	NC	30
Chloroethane	ND	ND	ug/l	NC	30
1,1-Dichloroethene	ND	ND	ug/l	NC	30
trans-1,2-Dichloroethene	ND	ND	ug/l	NC	30
cis-1,2-Dichloroethene	ND	ND	ug/l	NC	30
Trichloroethene	ND	ND	ug/l	NC	30
1,2-Dichlorobenzene	ND	ND	ug/l	NC	30
1,3-Dichlorobenzene	ND	ND	ug/l	NC	30
1,4-Dichlorobenzene	ND	ND	ug/l	NC	30
p/m-Xylene	ND	ND	ug/l	NC	30
o-xylene	ND	ND	ug/l	NC	30
Xylene (Total)	ND	ND	ug/l	NC	30
Styrene	ND	ND	ug/l	NC	30
Acetone	ND	ND	ug/l	NC	30
Carbon disulfide	ND	ND	ug/l	NC	30

Lab Duplicate Analysis
Batch Quality Control

Project Name: BORDEN AVE
Project Number: 29007

Lab Number: L1009532
Report Date: 07/02/10

Parameter	Native Sample	Duplicate Sample	Units	RPD	RPD Limits
Volatile Organics by GC/MS - Westborough Lab Associated sample(s): 01 QC Batch ID: WG419849-4 QC Sample: L1009513-01 Client ID: DUP Sample					
2-Butanone	ND	ND	ug/l	NC	30
Vinyl acetate	ND	ND	ug/l	NC	30
4-Methyl-2-pentanone	ND	ND	ug/l	NC	30
2-Hexanone	ND	ND	ug/l	NC	30
Acrolein	ND	ND	ug/l	NC	30
Acrylonitrile	ND	ND	ug/l	NC	30
Dibromomethane	ND	ND	ug/l	NC	30

Surrogate	%Recovery	Qualifier	%Recovery	Qualifier	Acceptance Criteria
Pentafluorobenzene	102		101		80-120
Fluorobenzene	105		102		80-120
4-Bromofluorobenzene	110		105		80-120

SEMIVOLATILES

Project Name: BORDEN AVE
Project Number: 29007

Lab Number: L1009532
Report Date: 07/02/10

SAMPLE RESULTS

Lab ID:	L1009532-01	Date Collected:	06/24/10 07:45
Client ID:	BAINF062410	Date Received:	06/24/10
Sample Location:	2323 BORDEN AVE	Field Prep:	Not Specified
Matrix:	Water	Extraction Method:	EPA 625
Analytical Method:	5,625	Extraction Date:	06/29/10 22:39
Analytical Date:	07/02/10 01:31		
Analyst:	PS		

Parameter	Result	Qualifier	Units	RL	MDL	Dilution Factor
Semivolatile Organics by GC/MS - Westborough Lab						
Naphthalene	ND		ug/l	5.0	--	1

Surrogate	% Recovery	Qualifier	Acceptance Criteria
Nitrobenzene-d5	67		23-120
2-Fluorobiphenyl	60		15-120
4-Terphenyl-d14	74		33-120

Project Name: BORDEN AVE
Project Number: 29007

Lab Number: L1009532
Report Date: 07/02/10

Method Blank Analysis
Batch Quality Control

Analytical Method: 5,625
Analytical Date: 07/01/10 18:33
Analyst: PS

Extraction Method: EPA 625
Extraction Date: 06/29/10 22:39

Parameter	Result	Qualifier	Units	RL	MDL
Semivolatile Organics by GC/MS - Westborough Lab for sample(s): 01 Batch: WG420537-1					
Acenaphthene	ND		ug/l	5.0	--
Benzidine	ND		ug/l	50	--
1,2,4-Trichlorobenzene	ND		ug/l	5.0	--
Hexachlorobenzene	ND		ug/l	5.0	--
Bis(2-chloroethyl)ether	ND		ug/l	5.0	--
2-Chloronaphthalene	ND		ug/l	6.0	--
3,3'-Dichlorobenzidine	ND		ug/l	50	--
2,4-Dinitrotoluene	ND		ug/l	6.0	--
2,6-Dinitrotoluene	ND		ug/l	5.0	--
Azobenzene	ND		ug/l	5.0	--
Fluoranthene	ND		ug/l	5.0	--
4-Chlorophenyl phenyl ether	ND		ug/l	5.0	--
4-Bromophenyl phenyl ether	ND		ug/l	5.0	--
Bis(2-chloroisopropyl)ether	ND		ug/l	5.0	--
Bis(2-chloroethoxy)methane	ND		ug/l	5.0	--
Hexachlorobutadiene	ND		ug/l	10	--
Hexachlorocyclopentadiene	ND		ug/l	30	--
Hexachloroethane	ND		ug/l	5.0	--
Isophorone	ND		ug/l	5.0	--
Naphthalene	ND		ug/l	5.0	--
Nitrobenzene	ND		ug/l	5.0	--
NDPA/DPA	ND		ug/l	15	--
n-Nitrosodi-n-propylamine	ND		ug/l	5.0	--
Bis(2-ethylhexyl)phthalate	ND		ug/l	5.0	--
Butyl benzyl phthalate	ND		ug/l	5.0	--
Di-n-butylphthalate	ND		ug/l	5.0	--
Di-n-octylphthalate	ND		ug/l	5.0	--
Diethyl phthalate	ND		ug/l	5.0	--
Dimethyl phthalate	ND		ug/l	5.0	--
Benzo(a)anthracene	ND		ug/l	5.0	--
Benzo(a)pyrene	ND		ug/l	5.0	--

Project Name: BORDEN AVE
Project Number: 29007

Lab Number: L1009532
Report Date: 07/02/10

Method Blank Analysis
Batch Quality Control

Analytical Method: 5,625
Analytical Date: 07/01/10 18:33
Analyst: PS

Extraction Method: EPA 625
Extraction Date: 06/29/10 22:39

Parameter	Result	Qualifier	Units	RL	MDL
Semivolatile Organics by GC/MS - Westborough Lab for sample(s): 01 Batch: WG420537-1					
Benzo(b)fluoranthene	ND		ug/l	5.0	--
Benzo(k)fluoranthene	ND		ug/l	5.0	--
Chrysene	ND		ug/l	5.0	--
Acenaphthylene	ND		ug/l	5.0	--
Anthracene	ND		ug/l	5.0	--
Benzo(ghi)perylene	ND		ug/l	5.0	--
Fluorene	ND		ug/l	5.0	--
Phenanthrene	ND		ug/l	5.0	--
Dibenzo(a,h)anthracene	ND		ug/l	5.0	--
Indeno(1,2,3-cd)pyrene	ND		ug/l	7.0	--
Pyrene	ND		ug/l	5.0	--
Aniline	ND		ug/l	20	--
4-Chloroaniline	ND		ug/l	5.0	--
1-Methylnaphthalene	ND		ug/l	5.0	--
2-Nitroaniline	ND		ug/l	5.0	--
3-Nitroaniline	ND		ug/l	5.0	--
4-Nitroaniline	ND		ug/l	7.0	--
Dibenzofuran	ND		ug/l	5.0	--
2-Methylnaphthalene	ND		ug/l	5.0	--
n-Nitrosodimethylamine	ND		ug/l	50	--
2,4,6-Trichlorophenol	ND		ug/l	5.0	--
p-Chloro-m-cresol	ND		ug/l	5.0	--
2-Chlorophenol	ND		ug/l	6.0	--
2,4-Dichlorophenol	ND		ug/l	10	--
2,4-Dimethylphenol	ND		ug/l	10	--
2-Nitrophenol	ND		ug/l	20	--
4-Nitrophenol	ND		ug/l	10	--
2,4-Dinitrophenol	ND		ug/l	30	--
4,6-Dinitro-o-cresol	ND		ug/l	20	--
Pentachlorophenol	ND		ug/l	10	--
Phenol	ND		ug/l	7.0	--

Project Name: BORDEN AVE
Project Number: 29007

Lab Number: L1009532
Report Date: 07/02/10

Method Blank Analysis
Batch Quality Control

Analytical Method: 5,625
Analytical Date: 07/01/10 18:33
Analyst: PS

Extraction Method: EPA 625
Extraction Date: 06/29/10 22:39

Parameter	Result	Qualifier	Units	RL	MDL
Semivolatile Organics by GC/MS - Westborough Lab for sample(s): 01 Batch: WG420537-1					
2-Methylphenol	ND		ug/l	6.0	--
3-Methylphenol/4-Methylphenol	ND		ug/l	6.0	--
2,4,5-Trichlorophenol	ND		ug/l	5.0	--
Benzoic Acid	ND		ug/l	50	--
Benzyl Alcohol	ND		ug/l	10	--
Carbazole	ND		ug/l	5.0	--

Surrogate	%Recovery	Qualifier	Acceptance Criteria
2-Fluorophenol	46		21-120
Phenol-d6	30		10-120
Nitrobenzene-d5	84		23-120
2-Fluorobiphenyl	74		15-120
2,4,6-Tribromophenol	89		10-120
4-Terphenyl-d14	87		33-120

Lab Control Sample Analysis
Batch Quality Control

Project Name: BORDEN AVE
Project Number: 29007

Lab Number: L1009532
Report Date: 07/02/10

Parameter	LCS %Recovery	Qual	LCSD %Recovery	Qual	%Recovery Limits	RPD	Qual	RPD Limits
Semivolatile Organics by GC/MS - Westborough Lab Associated sample(s): 01 Batch: WG420537-2								
Acenaphthene	67		-		46-118	-		30
1,2,4-Trichlorobenzene	51		-		39-98	-		30
2-Chloronaphthalene	74		-		40-140	-		30
2,4-Dinitrotoluene	78		-		24-96	-		30
2,6-Dinitrotoluene	74		-		40-140	-		30
Fluoranthene	82		-		40-140	-		30
4-Chlorophenyl phenyl ether	71		-		40-140	-		30
n-Nitrosodi-n-propylamine	79		-		41-116	-		30
Butyl benzyl phthalate	78		-		40-140	-		30
Anthracene	78		-		40-140	-		30
Pyrene	76		-		26-127	-		30
P-Chloro-M-Cresol	78		-		23-97	-		30
2-Chlorophenol	70		-		27-123	-		30
2-Nitrophenol	77		-		30-130	-		30
4-Nitrophenol	33		-		10-80	-		30
2,4-Dinitrophenol	32		-		20-130	-		30
Pentachlorophenol	66		-		9-103	-		30
Phenol	29		-		12-110	-		30

Lab Control Sample Analysis
Batch Quality Control

Project Name: BORDEN AVE
Project Number: 29007

Lab Number: L1009532
Report Date: 07/02/10

Parameter	LCS %Recovery	Qual	LCSD %Recovery	Qual	%Recovery Limits	RPD	Qual	RPD Limits

Semivolatile Organics by GC/MS - Westborough Lab Associated sample(s): 01 Batch: WG420537-2

Surrogate	LCS %Recovery	Qual	LCSD %Recovery	Qual	Acceptance Criteria
2-Fluorophenol	42				21-120
Phenol-d6	29				10-120
Nitrobenzene-d5	75				23-120
2-Fluorobiphenyl	72				15-120
2,4,6-Tribromophenol	74				10-120
4-Terphenyl-d14	76				33-120

Matrix Spike Analysis
Batch Quality Control

Project Name: BORDEN AVE
Project Number: 29007

Lab Number: L1009532
Report Date: 07/02/10

Parameter	Native Sample	MS Added	MS Found	MS %Recovery	Qual	MSD Found	MSD %Recovery	Qual	Recovery Limits	RPD	Qual	RPD Limits
Semivolatile Organics by GC/MS - Westborough Lab Associated sample(s): 01 QC Batch ID: WG420537-3 QC Sample: L1009461-01 Client ID: MS Sample												
Acenaphthene	ND	81.6	53	65		-	-		46-118	-		30
1,2,4-Trichlorobenzene	ND	81.6	38	47		-	-		39-98	-		30
2-Chloronaphthalene	ND	81.6	56	69		-	-		40-140	-		30
2,4-Dinitrotoluene	ND	81.6	58	71		-	-		24-96	-		30
2,6-Dinitrotoluene	ND	81.6	55	67		-	-		40-140	-		30
Fluoranthene	ND	81.6	61	75		-	-		40-140	-		30
4-Chlorophenyl phenyl ether	ND	81.6	54	66		-	-		40-140	-		30
n-Nitrosodi-n-propylamine	ND	81.6	59	72		-	-		41-116	-		30
Butyl benzyl phthalate	ND	81.6	58	71		-	-		40-140	-		30
Anthracene	ND	81.6	59	72		-	-		40-140	-		30
Pyrene	ND	81.6	56	69		-	-		26-127	-		30
P-Chloro-M-Cresol	ND	81.6	63	77		-	-		23-97	-		30
2-Chlorophenol	ND	81.6	55	67		-	-		27-123	-		30
2-Nitrophenol	ND	81.6	55	67		-	-		30-130	-		30
4-Nitrophenol	ND	81.6	41	50		-	-		10-80	-		30
2,4-Dinitrophenol	ND	81.6	ND	22		-	-		20-130	-		30
Pentachlorophenol	ND	81.6	59	72		-	-		9-103	-		30
Phenol	ND	81.6	35	43		-	-		12-110	-		30

Matrix Spike Analysis
Batch Quality Control

Project Name: BORDEN AVE
Project Number: 29007

Lab Number: L1009532
Report Date: 07/02/10

Parameter	Native Sample	MS Added	MS Found	MS %Recovery	Qual	MSD Found	MSD %Recovery	Qual	Recovery Limits	RPD	Qual	RPD Limits

Semivolatile Organics by GC/MS - Westborough Lab Associated sample(s): 01 QC Batch ID: WG420537-3 QC Sample: L1009461-01 Client ID: MS Sample

Surrogate	MS % Recovery	MS Qualifier	MSD % Recovery	MSD Qualifier	Acceptance Criteria
2,4,6-Tribromophenol	78				10-120
2-Fluorobiphenyl	69				15-120
2-Fluorophenol	56				21-120
4-Terphenyl-d14	73				33-120
Nitrobenzene-d5	73				23-120
Phenol-d6	48				10-120

Project Name: BORDEN AVE
Project Number: 29007

Lab Duplicate Analysis
Batch Quality Control

Lab Number: L1009532
Report Date: 07/02/10

Parameter	Native Sample	Duplicate Sample	Units	RPD	Qual	RPD Limits
Semivolatile Organics by GC/MS - Westborough Lab Associated sample(s): 01 QC Batch ID: WG420537-4 QC Sample: L1009461-01 Client ID: DUP Sample						
Acenaphthene	ND	ND	ug/l	NC		30
Benzidine	ND	ND	ug/l	NC		30
1,2,4-Trichlorobenzene	ND	ND	ug/l	NC		30
Hexachlorobenzene	ND	ND	ug/l	NC		30
Bis(2-chloroethyl)ether	ND	ND	ug/l	NC		30
2-Chloronaphthalene	ND	ND	ug/l	NC		30
3,3'-Dichlorobenzidine	ND	ND	ug/l	NC		30
2,4-Dinitrotoluene	ND	ND	ug/l	NC		30
2,6-Dinitrotoluene	ND	ND	ug/l	NC		30
Azobenzene	ND	ND	ug/l	NC		30
Fluoranthene	ND	ND	ug/l	NC		30
4-Chlorophenyl phenyl ether	ND	ND	ug/l	NC		30
4-Bromophenyl phenyl ether	ND	ND	ug/l	NC		30
Bis(2-chloroisopropyl)ether	ND	ND	ug/l	NC		30
Bis(2-chloroethoxy)methane	ND	ND	ug/l	NC		30
Hexachlorobutadiene	ND	ND	ug/l	NC		30
Hexachlorocyclopentadiene	ND	ND	ug/l	NC		30
Hexachloroethane	ND	ND	ug/l	NC		30
Isophorone	ND	ND	ug/l	NC		30

Lab Duplicate Analysis
Batch Quality Control

Project Name: BORDEN AVE
Project Number: 29007

Lab Number: L1009532
Report Date: 07/02/10

Parameter	Native Sample	Duplicate Sample	Units	RPD	RPD Limits
Semivolatile Organics by GC/MS - Westborough Lab Associated sample(s): 01 QC Batch ID: WG420537-4 QC Sample: L1009461-01 Client ID: DUP Sample					
Naphthalene	ND	ND	ug/l	NC	30
Nitrobenzene	ND	ND	ug/l	NC	30
NDPA/DPA	ND	ND	ug/l	NC	30
n-Nitrosodi-n-propylamine	ND	ND	ug/l	NC	30
Bis(2-ethylhexyl)phthalate	ND	ND	ug/l	NC	30
Butyl benzyl phthalate	ND	ND	ug/l	NC	30
Di-n-butylphthalate	ND	ND	ug/l	NC	30
Di-n-octylphthalate	ND	ND	ug/l	NC	30
Diethyl phthalate	ND	ND	ug/l	NC	30
Dimethyl phthalate	ND	ND	ug/l	NC	30
Benzo(a)anthracene	ND	ND	ug/l	NC	30
Benzo(a)pyrene	ND	ND	ug/l	NC	30
Benzo(b)fluoranthene	ND	ND	ug/l	NC	30
Benzo(k)fluoranthene	ND	ND	ug/l	NC	30
Chrysene	ND	ND	ug/l	NC	30
Acenaphthylene	ND	ND	ug/l	NC	30
Anthracene	ND	ND	ug/l	NC	30
Benzo(ghi)perylene	ND	ND	ug/l	NC	30
Fluorene	ND	ND	ug/l	NC	30

Project Name: BORDEN AVE
Project Number: 29007

Lab Duplicate Analysis
Batch Quality Control

Lab Number: L1009532
Report Date: 07/02/10

Parameter	Native Sample	Duplicate Sample	Units	RPD	RPD Limits
Semivolatile Organics by GC/MS - Westborough Lab Associated sample(s): 01 QC Batch ID: WG420537-4 QC Sample: L1009461-01 Client ID: DUP Sample					
Phenanthrene	ND	ND	ug/l	NC	30
Dibenzo(a,h)anthracene	ND	ND	ug/l	NC	30
Indeno(1,2,3-cd)pyrene	ND	ND	ug/l	NC	30
Pyrene	ND	ND	ug/l	NC	30
Aniline	ND	ND	ug/l	NC	30
4-Chloroaniline	ND	ND	ug/l	NC	30
1-Methylnaphthalene	ND	ND	ug/l	NC	30
2-Nitroaniline	ND	ND	ug/l	NC	30
3-Nitroaniline	ND	ND	ug/l	NC	30
4-Nitroaniline	ND	ND	ug/l	NC	30
Dibenzofuran	ND	ND	ug/l	NC	30
2-Methylnaphthalene	ND	ND	ug/l	NC	30
n-Nitrosodimethylamine	ND	ND	ug/l	NC	30
2,4,6-Trichlorophenol	ND	ND	ug/l	NC	30
p-Chloro-m-cresol	ND	ND	ug/l	NC	30
2-Chlorophenol	ND	ND	ug/l	NC	30
2,4-Dichlorophenol	ND	ND	ug/l	NC	30
2,4-Dimethylphenol	ND	ND	ug/l	NC	30
2-Nitrophenol	ND	ND	ug/l	NC	30

Lab Duplicate Analysis
Batch Quality Control

Project Name: BORDEN AVE
Project Number: 29007

Lab Number: L1009532
Report Date: 07/02/10

Parameter	Native Sample	Duplicate Sample	Units	RPD	RPD Limits
Semivolatile Organics by GC/MS - Westborough Lab Associated sample(s): 01 QC Batch ID: WG420537-4 QC Sample: L1009461-01 Client ID: DUP Sample					
4-Nitrophenol	ND	ND	ug/l	NC	30
2,4-Dinitrophenol	ND	ND	ug/l	NC	30
4,6-Dinitro-o-cresol	ND	ND	ug/l	NC	30
Pentachlorophenol	ND	ND	ug/l	NC	30
Phenol	ND	ND	ug/l	NC	30
2-Methylphenol	ND	ND	ug/l	NC	30
3-Methylphenol/4-Methylphenol	ND	ND	ug/l	NC	30
2,4,5-Trichlorophenol	ND	ND	ug/l	NC	30
Benzoic Acid	ND	ND	ug/l	NC	30
Benzyl Alcohol	ND	ND	ug/l	NC	30
Carbazole	ND	ND	ug/l	NC	30

Surrogate	%Recovery	Qualifier	%Recovery	Qualifier	Acceptance Criteria
2-Fluorophenol	41		64		21-120
Phenol-d6	28		53		10-120
Nitrobenzene-d5	73		82		23-120
2-Fluorobiphenyl	68		74		15-120
2,4,6-Tribromophenol	73		81		10-120
4-Terphenyl-d14	75		77		33-120

Lab Duplicate Analysis
Batch Quality Control

Project Name: BORDEN AVE
Project Number: 29007

Lab Number: L1009532
Report Date: 07/02/10

Parameter	Native Sample	Duplicate Sample	Units	RPD	RPD Limits
Semivolatile Organics by GC/MS - Westborough Lab Associated sample(s): 01 QC Batch ID: WG420537-4 QC Sample: L1009461-01 Client ID: DUP Sample					

Surrogate	%Recovery	Qualifier	%Recovery	Qualifier	Acceptance Criteria

INORGANICS
&
MISCELLANEOUS

Project Name: BORDEN AVE
Project Number: 29007

Lab Number: L1009532
Report Date: 07/02/10

SAMPLE RESULTS

Lab ID: L1009532-01
Client ID: BAINF062410
Sample Location: 2323 BORDEN AVE
Matrix: Water

Date Collected: 06/24/10 07:45
Date Received: 06/24/10
Field Prep: Not Specified

Parameter	Result	Qualifier	Units	RL	MDL	Dilution Factor	Date Prepared	Date Analyzed	Analytical Method	Analyst
General Chemistry - Westborough Lab										
pH (H)	7.5		SU	-	NA	1	-	06/24/10 23:40	30,4500H+-B	BH

Lab Control Sample Analysis
Batch Quality Control

Project Name: BORDEN AVE
Project Number: 29007

Lab Number: L1009532
Report Date: 07/02/10

Parameter	LCS %Recovery	Qual	LCSD %Recovery	Qual	%Recovery Limits	RPD	Qual	RPD Limits
General Chemistry - Westborough Lab	Associated sample(s): 01		Batch: WG419821-1					
pH	100		-		99-101	-		5

Project Name: BORDEN AVE
Project Number: 29007

Lab Duplicate Analysis
Batch Quality Control

Lab Number: L1009532
Report Date: 07/02/10

Parameter	Native Sample	Duplicate Sample	Units	RPD	Qual	RPD Limits
General Chemistry - Westborough Lab Associated sample(s): 01 QC Batch ID: WG419821-2 QC Sample: L1009502-01 Client ID: DUP Sample						
pH (H)	10.4	10	SU	0		5

Project Name: BORDEN AVE
Project Number: 29007

Lab Number: L1009532
Report Date: 07/02/10

Sample Receipt and Container Information

Were project specific reporting limits specified? YES

Reagent H2O Preserved Vials Frozen on: NA

Cooler Information Custody Seal

Cooler	
A	Absent

Container Information

Container ID	Container Type	Cooler	pH	Temp deg C	Pres	Seal	Analysis(*)
L1009532-01A	Vial HCl preserved	A	N/A	2.6	Y	Absent	624(7)
L1009532-01B	Vial HCl preserved	A	N/A	2.6	Y	Absent	624(7)
L1009532-01C	Amber 1000ml unpreserved	A	7	2.6	Y	Absent	625(7)
L1009532-01D	Amber 1000ml unpreserved	A	7	2.6	Y	Absent	625(7)
L1009532-01E	Plastic 250ml unpreserved split	A	7	2.6	Y	Absent	PH-4500(.01)

*Values in parentheses indicate holding time in days

Project Name:	BORDEN AVE	**Lab Number:**	L1009532
Project Number:	29007	**Report Date:**	07/02/10

GLOSSARY

Acronyms

EPA - Environmental Protection Agency.

LCS - Laboratory Control Sample: A sample matrix, free from the analytes of interest, spiked with verified known amounts of analytes or a material containing known and verified amounts of analytes.

LCSD - Laboratory Control Sample Duplicate: Refer to LCS.

MDL - Method Detection Limit: This value represents the level to which target analyte concentrations are reported as estimated values, when those target analyte concentrations are quantified below the reporting limit (RL). The MDL includes any adjustments from dilutions, concentrations or moisture content, where applicable.

MS - Matrix Spike Sample: A sample prepared by adding a known mass of target analyte to a specified amount of matrix sample for which an independent estimate of target analyte concentration is available.

MSD - Matrix Spike Sample Duplicate: Refer to MS.

NA - Not Applicable.

NC - Not Calculated: Term is utilized when one or more of the results utilized in the calculation are non-detect at the parameter's reporting unit.

NI - Not Ignitable.

RL - Reporting Limit: The value at which an instrument can accurately measure an analyte at a specific concentration. The RL includes any adjustments from dilutions, concentrations or moisture content, where applicable.

RPD - Relative Percent Difference: The results from matrix and/or matrix spike duplicates are primarily designed to assess the precision of analytical results in a given matrix and are expressed as relative percent difference (RPD). Values which are less than five times the reporting limit for any individual parameter are evaluated by utilizing the absolute difference between the values; although the RPD value will be provided in the report.

Terms

Analytical Method: Both the document from which the method originates and the analytical reference method. (Example: EPA 8260B is shown as 1,8260B.) The codes for the reference method documents are provided in the References section of the Addendum.

Data Qualifiers

A - Spectra identified as "Aldol Condensation Product".

B - The analyte was detected above the reporting limit in the associated method blank. Flag only applies to associated field samples that have detectable concentrations of the analyte at less than five times (5x) the concentration found in the blank. For MCP-related projects, flag only applies to associated field samples that have detectable concentrations of the analyte at less than ten times (10x) the concentration found in the blank. For DOD-related projects, flag only applies to associated field samples that have detectable concentrations of the analyte at less than ten times (10x) the concentration found in the blank AND the analyte was detected above one-half the reporting limit (or above the reporting limit for common lab contaminants) in the associated method blank.

D - Concentration of analyte was quantified from diluted analysis. Flag only applies to field samples that have detectable concentrations of the analyte.

E - Concentration of analyte exceeds the range of the calibration curve and/or linear range of the instrument.

H - The analysis of pH was performed beyond the regulatory-required holding time of 15 minutes from the time of sample collection.

P - The RPD between the results for the two columns exceeds the method-specified criteria.

Q - The quality control sample exceeds the associated acceptance criteria. Note: This flag is not applicable for matrix spike recoveries when the sample concentration is greater than 4x the spike added or for batch duplicate RPD when the sample concentrations are less than 5x the RL. (Metals only.)

R - Analytical results are from sample re-analysis.

RE - Analytical results are from sample re-extraction.

Report Format: Data Usability Report

Project Name:	BORDEN AVE	**Lab Number:**	L1009532
Project Number:	29007	**Report Date:**	07/02/10

Data Qualifiers

J - Estimated value. This represents an estimated concentration for Tentatively Identified Compounds (TICs).
ND - Not detected at the reporting limit (RL) for the sample.

Report Format: Data Usability Report

Project Name: BORDEN AVE
Project Number: 29007

Lab Number: L1009532
Report Date: 07/02/10

REFERENCES

5 Methods for the Organic Chemical Analysis of Municipal and Industrial Wastewater. Appendix A, Part 136, 40 CFR (Code of Federal Regulations).

30 Standard Methods for the Examination of Water and Wastewater. APHA-AWWA-WPCF. 18th Edition. 1992.

LIMITATION OF LIABILITIES

Alpha Analytical performs services with reasonable care and diligence normal to the analytical testing laboratory industry. In the event of an error, the sole and exclusive responsibility of Alpha Analytical shall be to re-perform the work at it's own expense. In no event shall Alpha Analytical be held liable for any incidental, consequential or special damages, including but not limited to, damages in any way connected with the use of, interpretation of, information or analysis provided by Alpha Analytical.

We strongly urge our clients to comply with EPA protocol regarding sample volume, preservation, cooling, containers, sampling procedures, holding time and splitting of samples in the field.

Certificate/Approval Program Summary

Last revised June 17, 2010 - Westboro Facility

The following list includes only those analytes/methods for which certification/approval is currently held.
For a complete listing of analytes for the referenced methods, please contact your Alpha Customer Service Representative.

Connecticut Department of Public Health Certificate/Lab ID: PH-0574. ***NELAP Accredited Solid Waste/Soil.***

Drinking Water (Inorganic Parameters: Color, pH, Turbidity, Conductivity, Alkalinity, Chloride, Free Residual Chlorine, Fluoride, Calcium Hardness, Sulfate, Nitrate, Nitrite, Aluminum, Antimony, Arsenic, Barium, Beryllium, Cadmium, Calcium, Chromium, Copper, Iron, Lead, Magnesium, Manganese, Mercury, Molybdenum, Nickel, Potassium, Selenium, Silver, Sodium, Thallium, Vanadium, Zinc, Total Dissolved Solids, Total Organic Carbon, Total Cyanide, Perchlorate. Organic Parameters: Haloacetic Acids, Volatile Organics 524.2, Total Trihalomethanes 524.2, 1,2-Dibromo-3-chloropropane (DBCP), Ethylene Dibromide (EDB).)
Wastewater/Non-Potable Water (Inorganic Parameters: Color, pH, Conductivity, Acidity, Alkalinity, Chloride, Total Residual Chlorine, Fluoride, Total Hardness, Calcium Hardness, Silica, Sulfate, Sulfide, Ammonia, Kjeldahl Nitrogen, Nitrate, Nitrite, O-Phosphate, Total Phosphorus, Aluminum, Antimony, Arsenic, Barium, Beryllium, Boron, Cadmium, Calcium, Chromium, Hexavalent Chromium, Cobalt, Copper, Iron, Lead, Magnesium, Manganese, Mercury, Molybdenum, Nickel, Potassium, Selenium, Silver, Sodium, Strontium, Thallium, Tin, Titanium, Vanadium, Zinc, Total Residue (Solids), Total Dissolved Solids, Total Suspended Solids (non-filterable), BOD, CBOD, COD, TOC, Total Cyanide, Phenolics, Foaming Agents (MBAS), Bromide, Oil and Grease. Organic Parameters: PCBs, Organochlorine Pesticides, Technical Chlordane, Toxaphene, 2,4-D, 2,4,5-T, 2,4,5-TP(Silvex), Acid Extractables (Phenols), Benzidines, Phthalate Esters, Nitrosamines, Nitroaromatics & Isophorone, Polynuclear Aromatic Hydrocarbons, Haloethers, Chlorinated Hydrocarbons, Volatile Organics, Extractable Petroleum Hydrocarbons (ETPH), MA-EPH, MA-VPH.)
Solid Waste/Soil (Inorganic Parameters: Lead in Paint, pH, Aluminum, Antimony, Arsenic, Barium, Beryllium, Boron, Cadmium, Calcium, Chromium, Hexavalent Chromium, Cobalt, Copper, Iron, Lead, Magnesium, Manganese, Mercury, Molybdenum, Nickel, Potassium, Selenium, Silver, Sodium, Thallium, Tin, Vanadium, Zinc, Total Cyanide, Ignitability, Phenolics, Corrosivity, TCLP Leach (1311), Reactivity. Organic Parameters: PCBs, Organochlorine Pesticides, Technical Chlordane, Toxaphene, Extractable Petroleum Hydrocarbons (ETPH), MA-EPH, MA-VPH, Dicamba, 2,4-D, 2,4,5-T, 2,4,5-TP(Silvex), Volatile Organics, Acid Extractables (Phenols), 3.3'-Dichlorobenzidine, Phthalates, Nitrosamines, Nitroaromatics & Cyclic Ketones, PAHs, Haloethers, Chlorinated Hydrocarbons.)

Maine Department of Human Services Certificate/Lab ID: 2009024.
Drinking Water (Inorganic Parameters: SM9215B, 9221E, 9222B, 9222D, 9223B, EPA 180.1, 300.0, 353.2, SM2130B, 2320B, 4500Cl-D, 4500CN-C, 4500CN-E, 4500F-C, 4500H+B,4500NO3-F, EPA 200.7, EPA 200.8, 245.1. Organic Parameters: 504.1, 524.2, SM 6251B.)
Wastewater/Non-Potable Water (Inorganic Parameters: EPA 120.1, 1664A, 350.1, 351.1, 353.2, 410.4, 420.1, Lachat 10-107-06-1-B, SM2320B, 2340B, 2510B, 2540C, 2540D, 426C, 4500Cl-D, 4500Cl-E, 4500CN-C, 4500CN-E, 4500F-B, 4500F-C, 4500H+B, 4500Norg-B, 4500Norg-C, 4500NH3-B, 4500NH3-G, 4500NH3-H, 4500NO3-F, 4500P-B.5, 4500P-E, 5210B, 5220D, 5310C, EPA 200.7, 200.8, 245.1. Organic Parameters: 608, 624.)

Massachusetts Department of Environmental Protection Certificate/Lab ID: M-MA086.
Drinking Water
Inorganic Parameters: (EPA 200.8 for: Sb,As,Ba,Be,Cd,Cr,Cu,Pb,Ni,Se,Tl)
(EPA 200.7 for: Ba,Be,Ca,Cd,Cr,Cu,Na,Ni) 245.1, (300.0 for: Nitrate-N, Fluoride, Sulfate)
353.2 for: Nitrate-N, Nitrite-N; SM4500NO3-F, 4500F-C, 4500CN-CE, EPA 180.1, SM2130B, SM4500Cl-D, 2320B, SM2540C, SM4500H-B.
Organic Parameters: (EPA 524.2 for: Trihalomethanes, Volatile Organics)
(504.1 for: 1,2-Dibromoethane, 1,2-Dibromo-3-Chloropropane), 314.0, 332.
Microbiology Parameters: SM9215B; ENZ. SUB. SM9223; MF-SM9222D
Non-Potable Water
Inorganic Parameters:, (EPA 200.8 for: Al,Sb,As,Be,Cd,Cr,Cu,Pb,Mn,Ni,Se,Ag,Tl,Zn)
(EPA 200.7 for: Al,Sb,As,Be,Cd,Cr,Co,Cu,Fe,Pb,Mn,Mo,Ni,Se,Ag,Sr,Ti,Tl, V,Zn,Ca,Mg,Na,K)
245.1, SM4500H,B, EPA 120.1, SM2510B, 2540C, 2540B, 2340B, 2320B, 4500CL-E, 4500F-BC, 426C, SM4500NH3-BH, (EPA 350.1 for: Ammonia-N), LACHAT 10-107-06-1-B for Ammonia-N, SM4500NO3-F, 353.2 for Nitrate-N, SM4500NH3-B,C-Titr, SM4500NH3-BC-NES, EPA 351.1, SM4500P-E, 4500P-B,E, 5220D, EPA 410.4, SM 5210B, 5310C, 4500CL-D, EPA 1664, SM14 510AC, EPA 420, SM4500-CN-CE, SM2540D.
Organic Parameters: (EPA 624 for Volatile Halocarbons, Volatile Aromatics)
(608 for: Chlordane, Aldrin, Dieldrin, DDD, DDE, DDT, Heptachlor, Heptachlor Epoxide, PCBs-Water), EPA 625 for SVOC Acid Extractables and SVOC Base/Neutral Extractables, 600/4-81-045-PCB-Oil

New Hampshire Department of Environmental Services Certificate/Lab ID: 200307. ***NELAP Accredited.***
Drinking Water (Inorganic Parameters: SM6215B, 9222B, 9223B Colilert, EPA 200.7, 200.8, 245.2, 120.1, 300.0, 314.0, SM4500CN-E, 4500H+B, 4500NO3-F, 2320B, 2510B, 2540C, 4500F-C, 5310C, 2120B, EPA 331.0. Organic Parameters: 504.1, 524.2, SM6251B.)
Non-Potable Water (Inorganic Parameters: SM9222D, 9221B, 9222B, 9221E-EC, EPA 200.7, 200.8, 245.1, 245.2, SW-846 6010B, 6020, 7196A, 7470A, SM3500-CR-D, EPA 120.1, 300.0, 350.1, 351.1, 353.2, 420.1, 1664A, SW-846 9010, 9030, 9040B, SM426C, SM2310B, 2540B, 2540D, 4500H+B, 4500NH3-H, 4500NH3-E, 4500NO2-B, 4500P-E, 4500-S2-D, 5210B, 2320B, 2540C, 4500F-C, 5310C, 5540C, LACHAT 10-117-07-1-B, LACHAT 10-107-06-1-B, LACHAT 10-107-04-1-C, LACHAT 10-107-04-1-J, LACHAT 10-117-07-1-A, SM4500CL-E, LACHAT 10-204-00-1-A, LACHAT 10-107-06-2-D. Organic Parameters: SW-846 3005A, 3015A, 3510C, 5030B, 8021B, 8260B, 8270C, 8330, EPA 624, 625, 608, SW-846 8082, 8081A.)
Solid & Chemical Materials (Inorganic Parameters: SW-846 6010B, 7196A, 7471A, 7.3.3.2, 7.3.4.2, 1010, 1030, 9010, 9012A, 9014, 9030B, 9040, 9045C, 9050C, 1311, 3005A, 3050B, 3051A. Organic Parameters: SW-846 3540C, 3545, 3580A, 5030B, 5035, 8021B, 8260B, 8270C, 8330, 8151A, 8082, 8081A.)

New Jersey Department of Environmental Protection Certificate/Lab ID: MA935. ***NELAP Accredited.***
Drinking Water (Inorganic Parameters: SM9222B, 9221E, 9223B, 9215B, 4500NO3-F, 4500F-C, EPA 300.0, 200.7, 2540C, 2320B, 314.0, SM2120B, 2510B, 5310C, SM4500H-B, EPA 200.8, 245.2. Organic Parameters: 504.1, SM6251B, 524.2.)
Non-Potable Water (Inorganic Parameters: SM5210B, EPA 410.4, SM5220D, 4500Cl-D, EPA 300.0, SM2120B, SM4500F-BC, EPA 200.7, 351.1, LACHAT 10-107-06-2-D, EPA 353.2, SM4500NO3-F, 4500NO2-B, EPA 1664A, SM5310B, C or D, 4500-PE, EPA 420.1, SM4500P-B5+E, 2540B, 2540C, 2540D, EPA 120.1, SM2510B, SM15 426C, SM9221CE, 9222D, 9221B, 9222B, 9215B, 2310B, 2320B, 4500NH3-H, 4500-S D, EPA 350.1, SM5210B, SW-846 3015, 6020, 7470A, 5540C, 4500H-B, EPA 200.8, SM3500Cr-D, EPA 245.1, 245.2, SW-846 9040B, 3005A, EPA 6010B, 7196A, SW-846 9010B, 9030B. Organic Parameters: SW-846 8260B, 8270C, 3510C, EPA 608, 624, 625, SW-846 5030B, 8021B, 8081A, 8082, 8151A, 8330, NJ OQA-QAM-025 Rev.7.)
Solid & Chemical Materials (Inorganic Parameters: SW-846 9040B, 3005A, 6010B, 7196A, 5030B, 9010B, 9030B, 1030, 1311, 3050B, 3051, 7471A, 9014, 9012A, 9045C, 9050A, 9065. Organic Parameters: SW-846 8021B, 8081A, 8082, 8151A, 8330, 8260B, 8270C, 1311, 1312, 3540C, 3545, 3550B, 3580A, 5035L, 5035H, NJ OQA-QAM-025 Rev.7.)

New York Department of Health Certificate/Lab ID: 11148. ***NELAP Accredited.***
Drinking Water (Inorganic Parameters: SM9223B, 9222B, 9215B, EPA 200.8, 200.7, 245.2, SM5310C, EPA 314.0, 332.0, SM2320B, EPA 300.0, SM2120B, 4500CN-E, 4500F-C, 4500H-B, 4500NO3-F, 2540C, EPA 120.1, SM 2510B. Organic Parameters: EPA 524.2, 504.1.)
Non-Potable Water (Inorganic Parameters: SM9221E, 9222D, 9221B, 9222B, 9215B, 5210B, EPA 410.4, SM5220D, 2310B-4a, 2320B, EPA 200.7, 300.0, LACHAT 10-117-07-1A or B, SM4500Cl-E, 4500F-C, SM15 426C, EPA 350.1, LACHAT 10-107-06-1-B, SM4500NH3-H, EPA 351.1, LACHAT 10-107-06-2, EPA 353.2, LACHAT 10-107-041-C, SM4500-NO3-F, 4500-NO2-B, 4500P-E, 2540C, 2540B, 2540D, EPA 200.8, EPA 6010B, 6020, EPA 7196A, S\M3500Cr-D, EPA 245.1, 245.2, 7470A, SM2120B, SM4500-CN-E LACHAT 10-204-00-1-A, EPA 9040B, SM4500-HB, EPA 1664A, SM5310C, EPA 420.1, SM14 510C, EPA 120.1, SM2510B, SM4500S-D, SM5540C, EPA 3005A, 3015. Organic Parameters: EPA 624, 8260B, 8270C, 625, 608, 8081A, 8151A, 8330, 8082, EPA 3510C, 5030B, 9010B, 9030B.)
Solid & Hazardous Waste (Inorganic Parameters: 1010, 1030, SW-846 Ch 7 Sec 7.3, EPA 6010B, 7196A, 7471A, 9012A, 9014, 9040B, 9045C, 9065, 9050, EPA 1311, 1312, 3005A, 3050B, 9010B, 9030B. Organic Parameters: EPA 8260B, 8270C, 8081A, 8151A, 8330, 8082, 3540C, 3545, 3546, 3580, 5030B, 5035.)

North Carolina Department of the Environment and Natural Resources Certificate/Lab ID : 666. Organic Parameters: MA-EPH, MA-VPH.

Pennsylvania Department of Environmental Protection Certificate/Lab ID : 68-03671. ***NELAP Accredited.***
Non-Potable Water (Organic Parameters: EPA 3510C, 5030B, 625, 624. 608, 8081A, 8082, 8151A, 8260B, 8270C, 8330)
Solid & Hazardous Waste (Inorganic Parameters: EPA 1010, 1030, 1311, 3050B, 3051, 6010B, EPA 7.3.3.2, EPA 7.3.4.2, 7196A, 7471A, 9010B, 9012A, 9014, 9040B, 9045C, 9050, 9065. Organic Parameters: 3540C, 3545, 3580A, 5035, 8021B, 8081A, 8082, 8151A, 8260B, 8270C, 8330)

Rhode Island Department of Health Certificate/Lab ID: LAO00065. ***NELAP Accredited via NY-DOH.***
Refer to MA-DEP Certificate for Potable and Non-Potable Water.
Refer to NY-DOH Certificate for Potable and Non-Potable Water.

Texas Commisson on Environmental Quality Certificate/Lab ID: T104704476-09-1. ***NELAP Accredited.***
Non-Potable Water (Inorganic Parameters: EPA 120.1, 1664, 200.7, 200.8, 245.1, 245.2, 300.0, 350.1, 351.1, 353.2, 376.2, 410.4, 420.1, 6010, 6020, 7196, 7470, 9040, SM 2120B, 2310B, 2320B, 2510B, 2540B, 2540C, 2540D, 426C, 4500CL-E, 4500CN-E, 4500F-C, 4500H+B, 4500NH3-H, 4500NO2B, 4500P-E, 4500 $S2^-$ D, 510C, 5210B, 5220D, 5310C, 5540C. Organic Parameters: EPA 608, 624, 625, 8081, 8082, 8151, 8260, 8270, 8330.)

Solid & Hazardous Waste (Inorganic Parameters: EPA 1311, 1312, 9012, 9014, 9040, 9045, 9050, 9065.)

Department of Defense Certificate/Lab ID: L2217.
Drinking Water (Inorganic Parameters: SM 4500H-B. Organic Parameters: EPA 524.2, 504.1.)

Non-Potable Water (Inorganic Parameters: EPA 200.7, 200.8, 6010B, 6020, 245.1, 245.2, 7470A, 9040B, 300.0, 9251, 9038, 350.1, 353.2, 351.1, 314, 120.1, 9050A , 410.4, 9060, 1664, 420.1, LACHAT 10-107-06-1-B, SM 4500CN-E, 4500H-B, 4500CL-E, 4500F-BC, 4500SO4-E, 426C, 4500NH3-B, 4500NH3-H, 4500NO3-F, 4500NO2-B, 4500Norg-C, 4500PE, 2510B, 5540C, 5220D, 5310C, 2540B, 2540C, 2540D, 510C, 4500S2-AD, 3005A, 3015, 9010B, 9030B. Organic Parameters: EPA 8260B, 8270C, 8330, 625, 8082, 8151A, 8081A, 3510C, 5030B, MassDEP EPH, MassDEP VPH.)

Solid & Hazardous Waste (Inorganic Parameters: EPA 200.7, 6010B, 7471A, 9040B, 9045C, 9065, 420.1, 9012A, 6860, 1311, 1312, 3050B, 9030B, 3051, 9010B, 3540C, SM 510ABC, 4500CN-CE, 2540G, SW-846 7.3, Organic Parameters: EPA 8260B, 8270C, 8330, 8082, 8081A, 8151A, 3545, 3546, 3580, 5035, MassDEP EPH, MassDEP VPH.)

Analytes Not Accredited by NELAP
Certification is not available by NELAP for the following analytes: **EPA 8260B:** Freon-113, 1,2,4,5-Tetramethylbenzene, 4-Ethyltoluene. **EPA 8330A:** PETN, Picric Acid, Nitroglycerine, 2,6-DANT, 2,4-DANT. **EPA 8270C:** Methyl naphthalene, Dimethyl naphthalene, Total Methylnapthalenes, Total Dimethylnaphthalenes, 1,4-Diphenylhydrazine (Azobenzene). **EPA 625:** 4-Chloroaniline. **EPA 350.1** for Ammonia in a Soil matrix.

CHAIN OF CUSTODY

PAGE 1 OF 1

Date Rec'd in Lab: 6/24/10

ALPHA Job #: L1009532

ALPHA ANALYTICAL
WESTBORO, MA TEL: 508-898-9220 FAX: 508-898-9193
MANSFIELD, MA TEL: 508-822-9300 FAX: 508-822-3288

Serial No:07021011:38

Client Information

Client: EPM Inc
Address: 1983 Marcus Ave Sh09
Lake Success, NY 11042
Phone: 516-328-1194
Fax: 516-328-1381
Email: rhart@epmco.com
☐ These samples have been previously analyzed by Alpha

Project Information

Project Name: Borden Ave
Project Location: 2323 Borden Ave
Project #: 2907
Project Manager: Rick Hart
ALPHA Quote #:

Turn-Around Time

☒ Standard ☐ RUSH (only confirmed if pre-approved)
Date Due: 7/1/10 Time: 1 Week

Report Information - Data Deliverables

☒ FAX ☐ EMAIL
☐ ADEx ☐ Add'l Deliverables

Billing Information

☒ Same as Client info PO #:

Regulatory Requirements/Report Limits

State /Fed Program	Criteria
NYSDEC	

Other Project Specific Requirements/Comments/Detection Limits:
* 7 day TAT
* Please email Results to rhart@epmco.com

ALPHA Lab ID (Lab Use Only)	Sample ID	Collection Date	Collection Time	Sample Matrix	Sampler's Initials	BTEX 624	MTBE 624	Naphthalene 625	PH	Sample Specific Comments
09532-1	BAINFC062410	6/24/10	745	W	SC	X	X	X	X	

SAMPLE HANDLING
Filtration
☐ Done
☒ Not needed
☐ Lab to do
Preservation
☐ Lab to do
(Please specify below)

TOTAL # BOTTLES: 4

Container Type	V	V	A	A
Preservative	HCL			

Relinquished By:	Date/Time	Received By:	Date/Time
S. Charepany	6/24/10 1025		6/24/10 1025
	6/24/10 1645		6/24/10 1645
	6/24/10 2145		6/24/10 2145

Please print clearly, legibly and completely. Samples can not be logged in and turnaround time clock will not start until any ambiguities are resolved. All samples submitted are subject to Alpha's Terms and Conditions. See reverse side.

FORM NO: 01-01 (rev. 14-OCT-07)

ENVIRONMENTAL
PLANNING &
EPM MANAGEMENT, INC.

February 13, 2009

Harry M. Palmer, P.E.
HAKS Engineering
NYCDOT Field Office
23-23 Borden Ave
Long Island City, NY 11101

RE: Groundwater Sample Results
Borden Avenue Bridge Emergency Repair
Long Island City, NY
NYCDOT Contract No. HBQ1162E

Dear Mr. Palmer:

This letter contains the results of groundwater sampling conducted by EPM, Inc. on February 3, 2009 at the project site for the Emergency Construction of the Borden Avenue Bridge over Dutch Kills, in Long Island City, NY (Figure 1 - Project Site Location). The sample was collected to assess general groundwater quality at the project site to identify possible handling and discharge options during construction dewatering. The groundwater results were compared to the New York City Department of Environmental Protection (NYCDEP) Limitations for Effluent to Sanitary or Combined Sewers, May 2005; and, to the New York State Department of Environmental Conservation (NYSDEC) Technical and Operational Guidance Series (TOGS 1.1.1) Ambient Water Quality Standards and Guidance Values for Class GA waters.

SAMPLE COLLECTION AND ANALYSIS

One groundwater sample was collected from a permanent 2-inch diameter flush mount monitoring well identified on Figure 2 as well MW-1. The well was measured on February 3, 2009 for depths to water and free phase petroleum product. Measurements for free product were collected with a dual-phase interface probe prior to purging the well, after purging the well and allowing the water to return to static levels, and again after the collection of samples. No visible petroleum sheen or measurable free product was observed in the well during the three separate measurements. The field measurements and pre-sample purge volumes are summarized below.

Well Characteristics, Field Observations, and Purge Volume on February 3, 2009						
Well Diameter	Total Well Depth	Initial Depth to Water	Depth to Free Product (ft.)	Well Volume	Purge Volume	Depth to Water at Sampling
2 in.	10 ft.	4.10 ft.	None observed	1 gal.	~ 5 gal.	4.22 ft.

1983 Marcus Avenue, Suite 109
Lake Success, New York 11042
Phone: 516-328-1194 / Fax: 516-328-1381

Purging was accomplished by hand bailing the well with a dedicated clear Teflon bailer. The well purged dry after the initial removal of approximately 1.5 gallons of water. The well was allowed to recharge to near static level and purged to dryness a second time, and again allowed to return to static level before bailing a third time to dryness, for a total purge volume of approximately 5 gallons. After the third round of purging, the well was allowed to return to near static level and was sampled for laboratory analysis using a clean bailer.

The sample was collected in laboratory provided containers and placed in a cooler on ice and delivered under chain-of-custody to New York and New Jersey Certified Laboratory Chemtech, Inc. of Mountainside, New Jersey. The sample was analyzed by the laboratory for VOCs (by EPA Method 8260), SVOCs (8270), PCBs (608), metals (200.7/245.1), Total Petroleum Hydrocarbons (1664), Flashpoint, Total Solids, Total Suspended Solids, Carbonaceous Biochemical Oxygen Demand, Total Nitrogen, Nitrites, Nitrates, Total Kjeldahl Nitrogen (TKN), and Chloride. Field measurements were collected for temperature and pH at the time of sampling with a Hanna Model HI991300 field meter.

RESULTS

The analytical results are summarized in Table 1 through Table 6 in Attachment 2. The complete analytical laboratory report and chain-of-custody form are provided as Attachment 3.

No contaminants were detected above their respective NYCDEP Sewer Discharge Limitations (Table 1). As summarized in Table 2 through Table 6, no contaminants were detected above their respective NYSDEC Class GA values.

CONCLUSIONS AND RECOMMENDATIONS

The laboratory results for the groundwater sample collected on February 3rd do not indicate any exceedence of the regulatory values. Based on these results, groundwater beneath the project site appears to meet NYCDEP Sewer Discharge requirements. It is cautioned that these results are based on a single sample collected under non-pumping conditions. Based on the industrial nature of the surrounding area, it is possible that significant dewatering could draw potentially impacted groundwater from the surrounding area towards the dewatering point.

Discharges of dewatering fluids to the nearby surface water body would require a New York State Pollutant Discharge Elimination System (SPDES) Permit issued by NYSDEC. Prior to issuing a permit, NYCDEP or NYSDEC could require additional data, such as pump test results, to determine the extent of influence of onsite dewatering on the surrounding aquifer and the potential to impact offsite groundwater contaminants.

Please feel free to contact the undersigned at 516-328-1194 should you have any questions.

Very truly yours,

Richard R. Hart
Environmental Planning &
Management, Inc.

Attachment 1: Figure 1. Project Site Location
Figure 2. Groundwater Sample Location

Attachment 2: Data Summary Tables

Attachment 3: Laboratory Report and Chain-of-Custody Form

ATTACHMENT 1

Figure 1. Project Site Location

Figure 2. Groundwater Sample Location

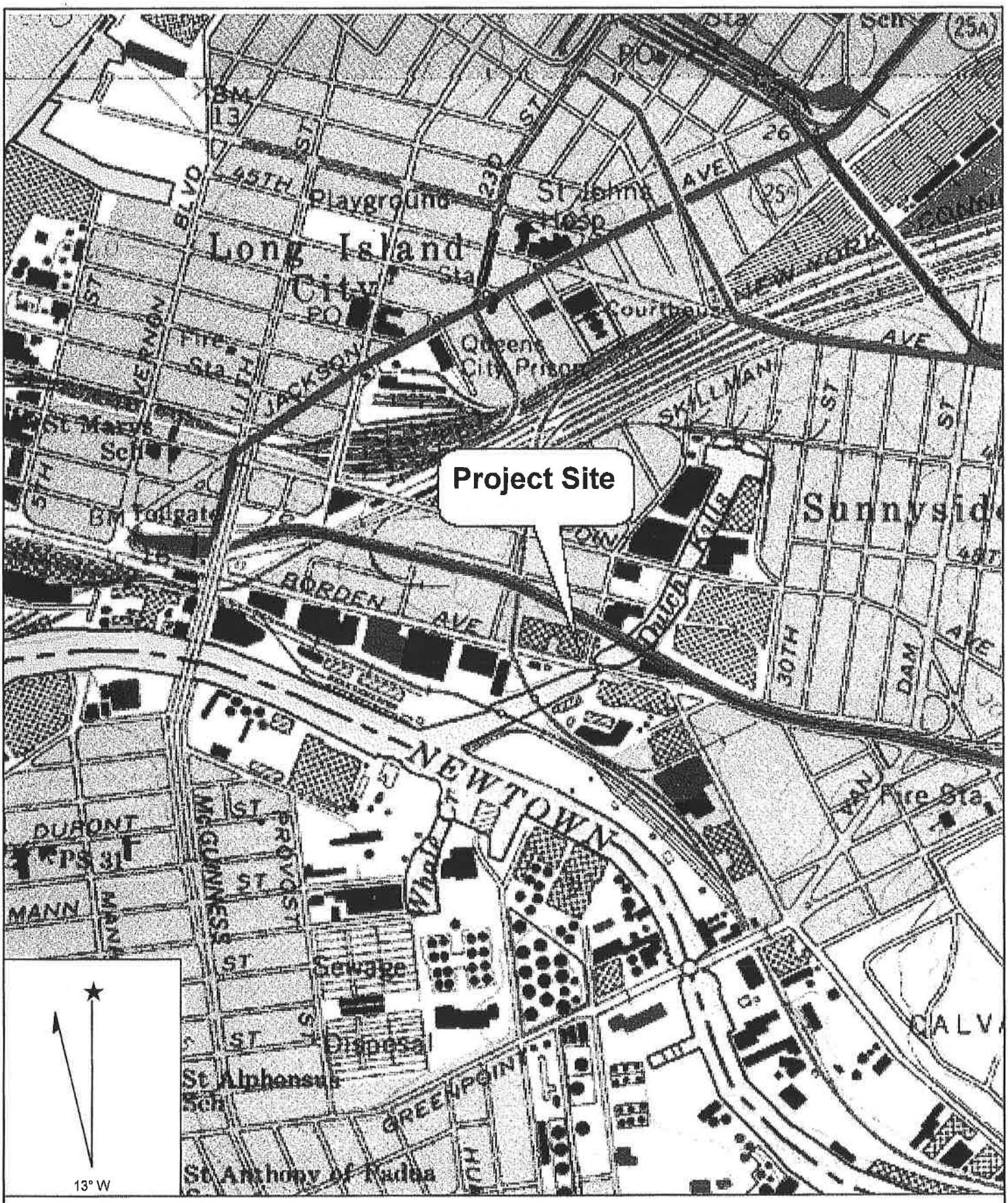

Name: BROOKLYN
Date: 2/11/2009
Scale: 1 inch equals 800 feet

Location: 040° 44' 24.68" N 073° 56' 43.62" W
Caption: Figure 1. Project Site Location
Borden Ave at 27th Street
Long Island City, NY

Copyright (C) 2001, Maptech, Inc.

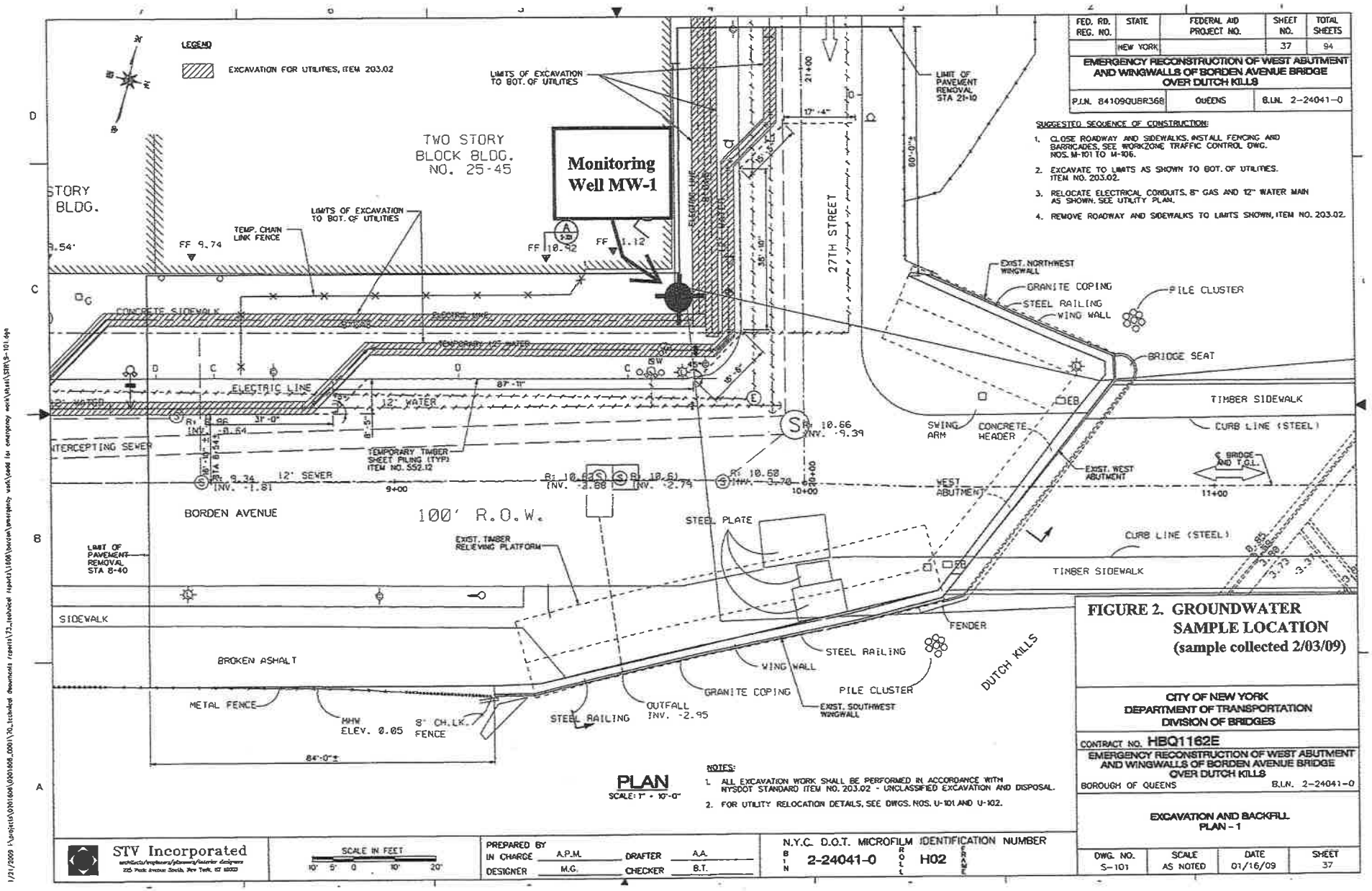

FED. RD. REG. NO.	STATE	FEDERAL AID PROJECT NO.	SHEET NO.	TOTAL SHEETS
	NEW YORK		37	94

EMERGENCY RECONSTRUCTION OF WEST ABUTMENT AND WINGWALLS OF BORDEN AVENUE BRIDGE OVER DUTCH KILLS

P.I.N. 84109QUBR368 | QUEENS | B.I.N. 2-24041-0

SUGGESTED SEQUENCE OF CONSTRUCTION:

1. CLOSE ROADWAY AND SIDEWALKS, INSTALL FENCING AND BARRICADES, SEE WORKZONE TRAFFIC CONTROL DWG. NOS. M-101 TO M-106.
2. EXCAVATE TO LIMITS AS SHOWN TO BOT. OF UTILITIES. ITEM NO. 203.02.
3. RELOCATE ELECTRICAL CONDUITS, 8" GAS AND 12" WATER MAIN AS SHOWN. SEE UTILITY PLAN.
4. REMOVE ROADWAY AND SIDEWALKS TO LIMITS SHOWN, ITEM NO. 203.02.

ATTACHMENT 2

Data Summary Tables

Table 1
Groundwater Results Compared to NYCDEP Sewer Discharge Limits
Borden Avenue Bridge Project
Long Island City, NY

Sample ID:	MW-1	Units	NYCDEP Sewer Discharge Limit
Lab Identification:	A1357-18		
PARAMETER			
Total Petroleum Hydrocarbons	ND	ppm	50
pH	8.1	SU's	5-11
Temperature	52	Deg F	< 150
Flash Point	>150	Deg F	>140
Cadmium (unfiltered)	ND	ppm	2
Total Chromium (unfiltered)	0.00339	ppm	5
Hexavalent Chromium	ND	ppm	NA
Lead	0.0119	ppm	2
copper	0.00373	ppm	5
Mercury (unfiltered)	ND	ppm	0.05
Nickel (unfiltered)	ND	ppm	3
Zinc (unfiltered)	0.0147	ppm	5
Benzene	ND	ppb	134
Carbontetrachloride	ND	ppb	NA
Chlroroform	ND	ppb	NA
1,4 Dichlorobenzene	ND	ppb	NA
Ethylbenzene	ND	ppb	380
MTBE	ND	ppb	50
Napthalene	ND	ppb	47
Phenol	ND	ppb	NA
Toluene	ND	ppb	74
Xylenes (total)	ND	ppb	74
Tetrachloroethylene	ND	ppb	20
1,2,4-Trichlorobenzene	ND	ppb	NA
1,1,1 Trichloroethane	ND	ppb	NA
PCBs (total)	ND	ppb	1
Total Suspended Solids	26	ppm	350
Total Solids	800	ppm	NA
CBOD	ND	ppm	NA
Chloride	120	ppm	NA
Total Nitrogen	4.4	ppm	NA

Notes:
ND: Not detected above method detection limit.
NA: Not Available
SU = Standard Units
J = An Estimated Value due to analyte being detected below instrument lower calibration range.
ppm= parts per million
ppb= parts per billion

Table 2
Results for General Chemistry Analysis on Groundwater
NYCDOT Borden Avenue Bridge Project
Long Island City, NY

Sample Location:	MW-1	NYSDEC Class GA Value[(a)]
Lab Identification:	A1357-18	
Paramater	**Results**	
$CBOD_5$ (mg/l)	ND	NA
Chloride (mg/l)	120	250
Nitrate (mg/l)	ND	10
Total Nitrogen (mg/l)	4.4	10
Nitrite (mg/l)	ND	1
Total Kjeldahl Nitrogen (mg/l)	4.39	NA
Ignitability (deg F)	> 150	NA
Total Solids (mg/l)	800	NA
Total Suspended Solids (mg/l)	26.0	NA
Total Petro. Hydrocarbons (mg/l)	ND	NA

(a) - NYSDEC Division of Water Technical and Operational Guidance Series 1.1.1, June 1998.

ND: Not detected above method detection limit.

NA: No standard or guidance value available.

Table 3
Semi-Volatile Organic Compounds (SVOCs) in Groundwater
NYCDOT Borden Avenue Bridge Project
Long Island City, NY

Sample Location:	MW-1	Class GA Standards/ Guidance Values*
Lab Identification:	A1357-18	
ANALYTE	RESULTS (ppb)	
2-Chlorophenol	ND	NA
4-Chloro-3-methyl phenol	ND	NA
2,4-Dichlorophenol	ND	5.0
2,4-Dimethylphenol	ND	50.0
2,4-Dinitrophenol	ND	10.0
Ignitability (deg C)	ND	NA
4-Nitrophenol	ND	NA
Pentachlorophenol	ND	1.0
Phenol	ND	1.0
2,4,6-Trichlorophenol	ND	NA
Acenaphthene	ND	20.0
Acenaphthylene	ND	NA
Anthracene	ND	50.0
Benzo(a)anthracene	ND	0.002
Benzo(a)pyrene	ND	NA
Benzo(b)fluoranthene	ND	0.002
Benzo(g,h,i)perylene	ND	NA
Benzo(k)fluoranthene	ND	0.002
4-Bromophenyl phenyl ether	ND	NA
Butyl benzyl phthalate	ND	50.0
2-Chloronaphthalene	ND	10.0
4-Chloroaniline	ND	5.0
Chrysene	ND	0.002
bis(2-Chloroethoxy)methane	ND	5.0
bis(2-Chloroethyl)ether	ND	1.00
4-Chlorophenyl phenyl ether	ND	NA
2,4-Dinitrotoluene	ND	5.0
2,6-Dinitrotoluene	ND	5.0
3,3'-Dichlorobenzidine	ND	5.0
Dibenzo(a,h)anthracene	ND	NA
Di-n-butyl phthalate	ND	50.0
Di-n-octyl phthalate	ND	50.0

Sample Location:	MW-1	Class GA Standards/ Guidance Values*
Lab Identification:	A1357-18	
ANALYTE	RESULTS (ppb)	
Diethyl phthalate	ND	50.0
Dimethyl phthalate	ND	50.0
bis(2-ethylhexyl)phthalate	ND	5.0
Fluoranthene	ND	50.0
Fluorene	ND	50.0
Hexachlorobenzene	ND	0.04
Hexachlorobutadiene	ND	0.5
Hexachlorocyclopentadiene	ND	5.0
Hexachloroethane	ND	5.0
Indeno(1,2,3-cd)pyrene	ND	0.002
Isophorone	ND	50.0
Naphthalene	ND	10.0
Nitrobenzene	ND	0.4
n-Nitrosodimethylamine	ND	NA
N-Nitroso-di-n-propylamine	ND	NA
N-Nitrosodiphenylamine	ND	50.0
Phenanthrene	ND	50.0
Pyrene	ND	50.0
Benzyl Alcohol	ND	NA
2-Methylphenol	ND	NA
2,2-oxybis(1-Chloropropane)	ND	NA
3 & 4 Methylphenols	ND	NA
Benzoic Acid	ND	NA
2-Methylnaphthalene	ND	NA
2,4,5-Trichlorophenol	ND	NA
2-Nitroaniline	ND	5.0
3-Nitroaniline	ND	5.0
4-Nitroaniline	ND	5.0
Dibenzofuran	ND	NA
4,6-Dinitro-2-metylphenol	ND	NA
Azobenzene	ND	5.0

Notes:
*NYSDEC TOGS (1.1.1) Ambient Water Quality Standars and Guidance Values, 1998
All analytical concentrations and guidance values reported in parts per billion (ug/L)
N/A = Not Applicable (no guidance value).
ND: Not detected above method detection limit.

Table 4
Volatile Organic Compounds (VOCs) in Groundwater
NYCDOT Borden Avenue Bridge Project
Long Island City, NY

Sample Location:	MW-1	Class GA Standards/ Guidance Values*	Sample Location:	MW-1	Class GA Standards/ Guidance Values*
Lab Identification:	A1357-18		Lab Identification:	A1357-18	
ANALYTE	RESULTS (ppb)		ANALYTE	RESULTS (ppb)	
Acrolein	ND	5	Tert Butyl Alcohol	ND	NA
Acrylonitrile	ND	5.0	Acetone	ND	50.0
Benzene	ND	1.0	Carbon Disulfide	ND	NA
Bromodichloromethane	ND	50.0	Methyl Tert Butyl Ether	ND	NA
Bromoform	ND	50.0	Vinyl Acetate	ND	NA
Ignitability (deg C)	ND	5.0	2-Butanone	ND	NA
Carbon Tetrachloride	ND	5.0	2,2-Dichloropropane	ND	5.0
Chloroethane	ND	5.0	Bromochloromethane	ND	5.0
2-Chloroethyl vinyl ether	ND	NA	1,1-Dichloropropene	ND	5.0
Chloroform	ND	7.0	Dibromomethane	ND	5.0
Chloromethane	ND	5.0	4-Methyl-2-Pentanone	ND	NA
Dibromochloromethane	ND	50	1,3-Dichloropropane	ND	5.0
1,2-Dichlorobenzene	ND	3.0	2-Hexanone	ND	50.0
1,3-Dichlorobenzene	ND	3.0	1,2-Dibromoethane	ND	NA
1,4-Dichlorobenzene	ND	3.0	Chlorobenzene	ND	5.0
Dichlorodifluoromethane	ND	5.0	1,1,1,2-Tetrachloroethane	ND	5.0
1,1-Dichloroethane	ND	5.0	Styrene	ND	5.0
1,2-Dichloroethane	ND	0.6	Isoprpylbenzene	ND	NA
1,1-Dichloroethene	ND	5	1,2,3-Trichloropropane	ND	0.04
cis-1,2-Dichloroethene	ND	5.0	Bromobenzene	ND	5.0
trans-1,2-Dichloroethene	ND	5.0	n-propylbenzene	ND	5.0
1,2-Dichloropropane	ND	1.0	2-Chlorotoluene	ND	5.0
cis-1,3-Dichloropropene	ND	0.4	1,3,5-Trimethylbenzene	ND	5.0
trans-1,3-Dichloropropene	ND	0.4	4-Chlorotoluene	ND	5.0
Ethylbenzene	ND	5.0	tert-Butylbenzene	ND	5.0
Methylene chloride	ND	5.0	1,2,4-Trimethylbenzene	ND	5.0
1,1,2,2-Tetrachloroethane	ND	5.0	sec-Butylbenzene	ND	5.0
Tetrachloroethene	ND	5.0	p-Isopropyltoluene	ND	NA
Toluene	ND	5.0	n-Butylbenzene	ND	5.0
1,1,1-Trichloroethane	ND	5.0	1,2-Dibromo-3-Chloropropane	ND	0.04
1,1,2-Trichloroethane	ND	1.0	1,2,4-Trichlorobenzene	ND	NA
Trichloroethene	ND	5.0	Hexachlorobutadiene	ND	0.5
Trichlorofluoromethane	ND	5.0	Naphthalene	ND	10.0
Vinyl chloride	ND	2.0	1,2,3-Trichlorobenzene	ND	NA
Xylenes (total)	ND	5.0			

Notes:

*NYSDEC TOGS (1.1.1) Ambient Water Quality Standards and Guidance Values, 1998

All analytical concentrations and guidance values reported in parts per billion (ug/L)

NA : Not Applicable (no guidance value)

ND: Not detected above method detection limit.

Table 5
Total (unfiltered) Metals in Groundwater
NYCDOT Borden Avenue Bridge Project
Long Island City, NY

Sample Location:	MW-1	Class GA Standards / Guidance Values*
Lab Identification:	A1357-18	
ANALYTE	RESULTS (ppb)	
Cadmium	ND	5
Chromium	3.39 J	50
Chromium (Hexavent)	ND	50
Copper	3.73 J	200
Lead	11.9	25
Mercury	ND	0.7
Zinc	14.7 J	2,000

Notes:

*NYSDEC, TOGS (1.1.1) Ambient Water Quality Standars and Guidance Values.

J = Estimated value. Compound Detected below instrument lower calibration range.

ND: Not detected above method detection limit.

Table 6
Polychlorinated Biphenyls (PCBs) and Pesticides in Groundwater
NYCDOT Borden Avenue Bridge Project
Long Island City, NY

Sample Location:	MW-1	Class GA Standards / Guidance Values*
Lab Identification:	A1357-18	
ANALYTE	RESULTS (ppb)	
Aroclor 1016	ND	0.09**
Aroclor 1221	ND	
Aroclor 1232	ND	
Aroclor 1242	ND	
Aroclor 1248	ND	
Ignitability (deg C)	ND	
Aroclor 1260	ND	

Notes:

* NYSDEC, TOGS Ambient Water Quality Standars and Guidance Values, Class GA 1998

** Applies to the sum of these substances.
ND: Not detected above method detection limit.

TestAmerica

THE LEADER IN ENVIRONMENTAL TESTING

ANALYTICAL REPORT

Job Number: 220-9412-1

SDG Number: 220-9412

Job Description: Borden Ave Bridge

For:
STV Incorporated
225 Park Avenue South
New York, NY 10003

Attention: Mr. Brian Connolly

Approved for release.
Pally A Mercure
6/29/2009 1:01 PM

Designee for
Jill M Duhancik
Project Manager I
jill.duhancik@testamericainc.com
06/29/2009

The test results in this report meet all NELAP requirements unless specified within the case narrative. Pursuant to NELAP, this report may not be reproduced, except in full, without the written approval of the laboratory. All questions regarding this report should be directed to the TestAmerica Project Manager.

TestAmerica Connecticut Certifications and Approvals: CTDOH PH-047, MADEP CT023, RIDOH A43, NYDOH 10602, NY NELAP 10602, NHDES 2528, NJDEP CT410, ME DOH CT023, UT DOH 2032614458

TestAmerica Laboratories, Inc.
TestAmerica Connecticut 128 Long Hill Cross Road, Shelton, CT 06484
Tel (203) 929-8140 Fax (203) 929-8142 www.testamericainc.com

ACCREDITED IN ACCORDANCE WITH nelac

Case Narrative for Job: 220-9412-1

Client: STV Incorporated
Date: June 29, 2009

I certify that this data package is in compliance with the terms and conditions of this contract, both technically and for completeness, for other than the conditions detailed above. Release of the data contained in this hardcopy data package and in the computer-readable data submitted on diskette has been authorized by the Laboratory Manager or his designee, as verified by the following signature.

Lawrence Decker
Laboratory Director

June 29, 2009
Date

Job Narrative
220-J9412-1

Comments
No additional comments.

Receipt
Method(s) 8015B: The container label for the following samples did not match the information listed on the Chain-of-Custody (COC): S-1 (220-9412-3), S-2 (220-9412-4). The container labels list S-2 is on the container label time list 11:15 and S-1 is listed on the container cap while the COC lists ?. There are two samples a- 3 and a - 4, both times list 11:15 June 19 2009 and both labels list S-2 as the sample IDS. One cap list S-1 and the other cap list S-2.

All other samples were received in good condition within temperature requirements.

GC/MS VOA
Method(s) 8260B: Surrogate recovery for the following sample was outside control limits: S-1 (220-9412-3). Evidence of matrix interference is present; re-analysis was performed and confirmed. The first set of data was reported.

No other analytical or quality issues were noted.

GC/MS Semi VOA
Method(s) 8270C: Internal standard (ISTD) response for the following sample was outside control limits: W-TANK (220-9412-1). The sample was re-analyzed with concurring results. The original set of data has been reported.

No other analytical or quality issues were noted.

GC VOA
No analytical or quality issues were noted.

GC Semi VOA
Method(s) 8015B: The laboratory analyzes the following compounds for fingerprint analysis: #2 Fuel Oil, #4 Fuel Oil, #6 Fuel Oil, Kerosene, Gasoline, Motor Oil, and Coal Tar. The elution pattern present in the client's samples are compared to these standards to determine the best match. The carbon range for the following samples is between a #6 Fuel Oil and motor oil, however, because of differences of such magnitude, it is impossible to determine whether the unknown is a combination of the two or a completely different oil:S-1 (220-9412-3), S-2 (220-9412-4), W-EXC (220-9412-2), W-TANK (220-9412-1)

Method(s) 8081A: The capping continuing calibration verification (CCV) analyzed on 6/23/09 on GC-hp-6890-8 failed on both columns. These samples were analyzed in another bracket with concurring results.

Method(s) 8081A: The continuing calibration verification (CCV) for 6/24/09 recovered above the upper control limit. The samples associated with this CCV were non-detects for the affected analytes; therefore, the data have been reported.

No other analytical or quality issues were noted.

Metals
No analytical or quality issues were noted.

General Chemistry
Method(s) 9045C: This analysis is normally performed in the field and has a method-defined holding time of 15 minutes. All associated samples have been qualified with the "HF" flag to indicate they were performed in the laboratory outside the 15 minute timeframe.

No other analytical or quality issues were noted.

Organic Prep
No analytical or quality issues were noted.

VOA Prep
No analytical or quality issues were noted.

EXECUTIVE SUMMARY - Detections

Client: STV Incorporated

Job Number: 220-9412-1
Sdg Number: 220-9412

Lab Sample ID / Analyte	Client Sample ID	Result / Qualifier		Reporting Limit	Units	Method
220-9412-1	W-TANK					
Acetone		16	*	10	ug/L	8260B
Acenaphthene		3.6	J	17	ug/L	8270C
Acenaphthylene		2.2	J	17	ug/L	8270C
Anthracene		5.4	J	17	ug/L	8270C
Benzo[a]anthracene		8.6	J	17	ug/L	8270C
Benzo[a]pyrene		5.3	J	17	ug/L	8270C
Benzo[b]fluoranthene		4.4	J	17	ug/L	8270C
Benzo[g,h,i]perylene		6.5	J	17	ug/L	8270C
Benzo[k]fluoranthene		1.7	J	17	ug/L	8270C
Bis(2-ethylhexyl) phthalate		290		17	ug/L	8270C
Chrysene		8.3	J	17	ug/L	8270C
Dibenz(a,h)anthracene		3.1	J	17	ug/L	8270C
Dibenzofuran		2.1	J	17	ug/L	8270C
Fluoranthene		17		17	ug/L	8270C
Fluorene		3.5	J	17	ug/L	8270C
Indeno[1,2,3-cd]pyrene		4.0	J	17	ug/L	8270C
2-Methylnaphthalene		2.5	J	17	ug/L	8270C
Naphthalene		1.9	J	17	ug/L	8270C
Phenanthrene		13	J	17	ug/L	8270C
Pyrene		19		17	ug/L	8270C
Gasoline Range Organics (GRO)-C6-C10		0.018	J	0.050	mg/L	8015B
Diesel Range Organics [C10-C28]		11000		5000	ug/L	8015B
PCB-1242		1.6		0.50	ug/L	8082
PCB-1254		2.3		0.50	ug/L	8082
PCB-1260		2.2		0.50	ug/L	8082
Arsenic		25.8		12.5	ug/L	6020
Cadmium		13.1		12.5	ug/L	6020
Chromium		101		25.0	ug/L	6020
Copper		290		25.0	ug/L	6020
Nickel		126		12.5	ug/L	6020
Lead		280		12.5	ug/L	6020
Antimony		16.2	J	20.0	ug/L	6020
Zinc		506		125	ug/L	6020
Mercury		0.44		0.20	ug/L	7470A

EXECUTIVE SUMMARY - Detections

Client: STV Incorporated

Job Number: 220-9412-1
Sdg Number: 220-9412

Lab Sample ID / Analyte	Client Sample ID	Result / Qualifier		Reporting Limit	Units	Method
220-9412-2	W-EXC					
Acetone		6.2	J *	10	ug/L	8260B
Acenaphthene		0.66	J	4.1	ug/L	8270C
Anthracene		0.56	J	4.1	ug/L	8270C
Benzo[a]anthracene		0.74	J	4.1	ug/L	8270C
Benzo[a]pyrene		0.60	J	4.1	ug/L	8270C
Benzo[b]fluoranthene		0.52	J	4.1	ug/L	8270C
Benzo[g,h,i]perylene		1.6	J	4.1	ug/L	8270C
Bis(2-ethylhexyl) phthalate		17		4.1	ug/L	8270C
Chrysene		0.66	J	4.1	ug/L	8270C
Di-n-butyl phthalate		0.40	J	4.1	ug/L	8270C
Fluoranthene		1.7	J	4.1	ug/L	8270C
Fluorene		0.57	J	4.1	ug/L	8270C
Indeno[1,2,3-cd]pyrene		0.92	J	4.1	ug/L	8270C
Naphthalene		0.38	J	4.1	ug/L	8270C
Phenanthrene		1.4	J	4.1	ug/L	8270C
Pyrene		2.2	J	4.1	ug/L	8270C
Diesel Range Organics [C10-C28]		890		500	ug/L	8015B
Arsenic		7.3	J	12.5	ug/L	6020
Chromium		18.4	J	25.0	ug/L	6020
Copper		54.8		25.0	ug/L	6020
Nickel		30.0		12.5	ug/L	6020
Lead		47.0		12.5	ug/L	6020
Zinc		103	J	125	ug/L	6020

EXECUTIVE SUMMARY - Detections

Client: STV Incorporated

Job Number: 220-9412-1
Sdg Number: 220-9412

Lab Sample ID / Analyte	Client Sample ID	Result / Qualifier		Reporting Limit	Units	Method
220-9412-3	S-1					
Acetone		210	J *	230	ug/Kg	8260B
Benzene		27	J	57	ug/Kg	8260B
Carbon disulfide		11	J	57	ug/Kg	8260B
Ethylbenzene		50	J	57	ug/Kg	8260B
Methylene Chloride		100	J B	230	ug/Kg	8260B
1,1,2,2-Tetrachloroethane		390		57	ug/Kg	8260B
Xylenes, Total		300		57	ug/Kg	8260B
Acenaphthene		2000	J	12000	ug/Kg	8270C
Anthracene		5000	J	12000	ug/Kg	8270C
Benzo[a]anthracene		6200	J	12000	ug/Kg	8270C
Benzo[a]pyrene		6400	J	12000	ug/Kg	8270C
Benzo[b]fluoranthene		5000	J	12000	ug/Kg	8270C
Benzo[g,h,i]perylene		11000	J	12000	ug/Kg	8270C
Benzo[k]fluoranthene		1900	J	12000	ug/Kg	8270C
Bis(2-ethylhexyl) phthalate		130000		12000	ug/Kg	8270C
Chrysene		6900	J	12000	ug/Kg	8270C
Dibenz(a,h)anthracene		11000	J	12000	ug/Kg	8270C
Dibenzofuran		1500	J	12000	ug/Kg	8270C
Fluoranthene		12000	J	12000	ug/Kg	8270C
Fluorene		2800	J	12000	ug/Kg	8270C
Indeno[1,2,3-cd]pyrene		14000		12000	ug/Kg	8270C
2-Methylnaphthalene		6000	J	12000	ug/Kg	8270C
Naphthalene		3300	J	12000	ug/Kg	8270C
Phenanthrene		14000		12000	ug/Kg	8270C
Pyrene		19000		12000	ug/Kg	8270C
Gasoline Range Organics (GRO)-C6-C10		28		11	mg/Kg	8015B
Diesel Range Organics [C10-C28]		5100000		960000	ug/Kg	8015B
4,4'-DDD		310		38	ug/Kg	8081A
4,4'-DDE		130		38	ug/Kg	8081A
4,4'-DDT		410	*	38	ug/Kg	8081A
Aldrin		6.4	J	19	ug/Kg	8081A
beta-BHC		18	J	19	ug/Kg	8081A
Dieldrin		180		38	ug/Kg	8081A
Endrin		270		38	ug/Kg	8081A
Endrin aldehyde		75		38	ug/Kg	8081A
Endrin ketone		76		38	ug/Kg	8081A
Heptachlor		41		19	ug/Kg	8081A
Heptachlor epoxide		27		19	ug/Kg	8081A
Methoxychlor		96	J *	190	ug/Kg	8081A
alpha-Chlordane		61		19	ug/Kg	8081A
gamma-Chlordane		94		19	ug/Kg	8081A
PCB-1242		590		77	ug/Kg	8082
PCB-1254		520		77	ug/Kg	8082
PCB-1260		760		77	ug/Kg	8082
Silver		11.2		1.0	mg/Kg	6020
Arsenic		45.6		1.0	mg/Kg	6020
Beryllium		0.70	J	1.0	mg/Kg	6020
Cadmium		51.6		1.0	mg/Kg	6020

EXECUTIVE SUMMARY - Detections

Client: STV Incorporated

Job Number: 220-9412-1
Sdg Number: 220-9412

Lab Sample ID / Client Sample ID / Analyte	Result / Qualifier		Reporting Limit	Units	Method
Chromium	342		2.0	mg/Kg	6020
Copper	974		2.0	mg/Kg	6020
Nickel	392		1.0	mg/Kg	6020
Lead	607		1.0	mg/Kg	6020
Antimony	8.5		1.6	mg/Kg	6020
Selenium	8.8		2.0	mg/Kg	6020
Thallium	0.56	J	1.4	mg/Kg	6020
Zinc	1350		10	mg/Kg	6020
Mercury	2.4		0.55	mg/Kg	7471A
Ignitability	neg		2.2	mm/sec	1030
Temperature	1890		1.00	Fahrenheit	1030
Sulfide, Reactive	372		20.0	mg/Kg	9034
pH	8.52	HF	0.100	SU	9045C
Percent Moisture	56.4		0.10	%	Moisture
Percent Solids	43.6		0.10	%	Moisture
TCLP					
Methyl Ethyl Ketone	0.0084	J B	0.010	mg/L	8260B
Benzene	0.00082	J	0.0050	mg/L	8260B
Arsenic	0.064	J	0.075	mg/L	6010B
Barium	0.33		0.025	mg/L	6010B
Chromium	0.023	J	0.025	mg/L	6010B

EXECUTIVE SUMMARY - Detections

Client: STV Incorporated

Job Number: 220-9412-1
Sdg Number: 220-9412

Lab Sample ID / Analyte	Client Sample ID	Result / Qualifier		Reporting Limit	Units	Method
220-9412-4	S-2					
Acetone		340	*	220	ug/Kg	8260B
Benzene		10	J	54	ug/Kg	8260B
Carbon disulfide		20	J	54	ug/Kg	8260B
Ethylbenzene		19	J	54	ug/Kg	8260B
Methylene Chloride		98	J B	220	ug/Kg	8260B
Toluene		2.4	J B	54	ug/Kg	8260B
Xylenes, Total		90		54	ug/Kg	8260B
Acenaphthene		2400	J	12000	ug/Kg	8270C
Acenaphthylene		2100	J	12000	ug/Kg	8270C
Anthracene		7500	J	12000	ug/Kg	8270C
Benzo[a]anthracene		8900	J	12000	ug/Kg	8270C
Benzo[a]pyrene		7200	J	12000	ug/Kg	8270C
Benzo[b]fluoranthene		5300	J	12000	ug/Kg	8270C
Benzo[g,h,i]perylene		11000	J	12000	ug/Kg	8270C
Benzo[k]fluoranthene		1800	J	12000	ug/Kg	8270C
Bis(2-ethylhexyl) phthalate		110000		12000	ug/Kg	8270C
Chrysene		9200	J	12000	ug/Kg	8270C
Dibenz(a,h)anthracene		11000	J	12000	ug/Kg	8270C
Dibenzofuran		1400	J	12000	ug/Kg	8270C
Fluoranthene		15000		12000	ug/Kg	8270C
Fluorene		1700	J	12000	ug/Kg	8270C
Indeno[1,2,3-cd]pyrene		14000		12000	ug/Kg	8270C
2-Methylnaphthalene		2200	J	12000	ug/Kg	8270C
Naphthalene		2900	J	12000	ug/Kg	8270C
Phenanthrene		8700	J	12000	ug/Kg	8270C
Pyrene		21000		12000	ug/Kg	8270C
Gasoline Range Organics (GRO)-C6-C10		50		11	mg/Kg	8015B
Diesel Range Organics [C10-C28]		7000000		3600000	ug/Kg	8015B
4,4'-DDD		120		14	ug/Kg	8081A
4,4'-DDE		66		14	ug/Kg	8081A
4,4'-DDT		260	*	14	ug/Kg	8081A
alpha-BHC		3.0	J	7.3	ug/Kg	8081A
beta-BHC		8.3		7.3	ug/Kg	8081A
Dieldrin		74		14	ug/Kg	8081A
Endrin		200		14	ug/Kg	8081A
Endrin aldehyde		46		14	ug/Kg	8081A
Endrin ketone		43		14	ug/Kg	8081A
Heptachlor		26		7.3	ug/Kg	8081A
Heptachlor epoxide		11		7.3	ug/Kg	8081A
Methoxychlor		61	J *	73	ug/Kg	8081A
alpha-Chlordane		31		7.3	ug/Kg	8081A
gamma-Chlordane		32		7.3	ug/Kg	8081A
PCB-1242		720		180	ug/Kg	8082
PCB-1254		1100		180	ug/Kg	8082
PCB-1260		890		180	ug/Kg	8082
Silver		19.5		0.74	mg/Kg	6020
Arsenic		34.0		0.74	mg/Kg	6020
Beryllium		0.80		0.74	mg/Kg	6020

EXECUTIVE SUMMARY - Detections

Client: STV Incorporated

Job Number: 220-9412-1
Sdg Number: 220-9412

Lab Sample ID / Client Sample ID / Analyte	Result / Qualifier		Reporting Limit	Units	Method
Cadmium	104		0.74	mg/Kg	6020
Chromium	530		1.5	mg/Kg	6020
Copper	1450		1.5	mg/Kg	6020
Nickel	337		0.74	mg/Kg	6020
Lead	1370		0.74	mg/Kg	6020
Antimony	7.3		1.2	mg/Kg	6020
Selenium	5.0		1.5	mg/Kg	6020
Thallium	0.31	J	1.0	mg/Kg	6020
Zinc	2240		7.4	mg/Kg	6020
Mercury	2.6		0.54	mg/Kg	7471A
Ignitability	neg		2.2	mm/sec	1030
Temperature	1890		1.00	Fahrenheit	1030
Sulfide, Reactive	644		19.9	mg/Kg	9034
pH	8.34	HF	0.100	SU	9045C
Percent Moisture	53.7		0.10	%	Moisture
Percent Solids	46.3		0.10	%	Moisture
TCLP					
Methyl Ethyl Ketone	0.0085	J B	0.010	mg/L	8260B
Benzene	0.0018	J	0.0050	mg/L	8260B
Heptachlor	0.000042	J	0.00025	mg/L	8081A
Barium	0.34		0.025	mg/L	6010B
Chromium	0.038		0.025	mg/L	6010B

METHOD SUMMARY

Client: STV Incorporated

Job Number: 220-9412-1
Sdg Number: 220-9412

Description	Lab Location	Method	Preparation Method
Matrix Solid			
Volatile Organic Compounds (GC/MS)	TAL CT	SW846 8260B	
TCLP Extraction	TAL CT		SW846 1311
Purge and Trap	TAL CT		SW846 5030B
Semivolatile Compounds by Gas Chromatography/Mass Spectrometry (GC/MS)	TAL CT	SW846 8270C	
TCLP Extraction	TAL CT		SW846 1311
Liquid-Liquid Extraction (Separatory Funnel)	TAL CT		SW846 3510C
Automated Soxhlet Extraction	TAL CT		SW846 3541
Gasoline Range Organics - (GC)	TAL SAV	SW846 8015B	
Purge and Trap	TAL SAV		SW846 5030A
Diesel Range Organics (DRO) (GC)	TAL CT	SW846 8015B	
Hydrocarbon Product Identification (GC)	TAL CT	SW846 8015B	
Ultrasonic Extraction	TAL CT		SW846 3550B
Ultrasonic Extraction	TAL CT		SW846 3550B
Organochlorine Pesticides (GC)	TAL CT	SW846 8081A	
TCLP Extraction	TAL CT		SW846 1311
Liquid-Liquid Extraction (Separatory Funnel)	TAL CT		SW846 3510C
Ultrasonic Extraction	TAL CT		SW846 3550B
Polychlorinated Biphenyls (PCBs) by Gas Chromatography	TAL CT	SW846 8082	
Ultrasonic Extraction	TAL CT		SW846 3550B
Herbicides (GC)	TAL SAV	SW846 8151A	
TCLP Extraction	TAL SAV		SW846 1311
Extraction (Herbicides)	TAL SAV		SW846 8151A
Metals (ICP)	TAL CT	SW846 6010B	
TCLP Extraction	TAL CT		SW846 1311
Preparation, Total Metals	TAL CT		SW846 3010A
Metals (ICP/MS)	TAL CT	SW846 6020	
Preparation, Metals	TAL CT		SW846 3050B
Mercury (CVAA)	TAL CT	SW846 7470A	
TCLP Extraction	TAL CT		SW846 1311
Preparation, Mercury	TAL CT		SW846 7470A
Mercury (CVAA)	TAL CT	SW846 7471A	
Preparation, Mercury	TAL CT		SW846 7471A
Ignitability, Solids	TAL CT	SW846 1030	
Chromium, Hexavalent	TAL SAV	SW846 7196A	
Alkaline Digestion (Chromium, Hexavalent)	TAL SAV		SW846 3060A
Cyanide, Reactive	TAL CT	SW846 9012	
Cyanide, Reactive	TAL CT		SW846 7.3.3
Sulfide, Reactive	TAL CT	SW846 9034	
Sulfide, Reactive	TAL CT		SW846 7.3.4

METHOD SUMMARY

Client: STV Incorporated

Job Number: 220-9412-1
Sdg Number: 220-9412

Description	Lab Location	Method	Preparation Method
Matrix Solid			
pH	TAL CT	SW846 9045C	
Percent Moisture	TAL CT	EPA Moisture	
Matrix Water			
Volatile Organic Compounds (GC/MS)	TAL CT	SW846 8260B	
Purge and Trap	TAL CT		SW846 5030B
Semivolatile Compounds by Gas Chromatography/Mass Spectrometry (GC/MS)	TAL CT	SW846 8270C	
Liquid-Liquid Extraction (Separatory Funnel)	TAL CT		SW846 3510C
Gasoline Range Organics - (GC)	TAL SAV	SW846 8015B	
Purge and Trap	TAL SAV		SW846 5030B
Diesel Range Organics (DRO) (GC)	TAL CT	SW846 8015B	
Hydrocarbon Product Identification (GC)	TAL CT	SW846 8015B	
Liquid-Liquid Extraction (Separatory Funnel)	TAL CT		SW846 3510C
Liquid-Liquid Extraction (Separatory Funnel)	TAL CT		SW846 3510C
Polychlorinated Biphenyls (PCBs) by Gas Chromatography	TAL CT	SW846 8082	
Liquid-Liquid Extraction (Separatory Funnel)	TAL CT		SW846 3510C
Metals (ICP/MS)	TAL CT	SW846 6020	
Preparation, Total Metals	TAL CT		SW846 3010A
Mercury (CVAA)	TAL CT	SW846 7470A	
Preparation, Mercury	TAL CT		SW846 7470A

Lab References:

TAL CT = TestAmerica Connecticut

TAL SAV = TestAmerica Savannah

Method References:

EPA = US Environmental Protection Agency

SW846 = "Test Methods For Evaluating Solid Waste, Physical/Chemical Methods", Third Edition, November 1986 And Its Updates.

METHOD / ANALYST SUMMARY

Client: STV Incorporated

Job Number: 220-9412-1
Sdg Number: 220-9412

Method	Analyst	Analyst ID
SW846 8260B	Kostrzewska, Barbara	BK
SW846 8260B	Paveglio, Peter R	PRP
SW846 8270C	Jonas, Stephan	SJ
SW846 8015B	Moncrief, Amy	AM
SW846 8015B	Widomski, Sarah	SW
SW846 8081A	Cooper, Susan	SC
SW846 8082	Smith, Karli	KS
SW846 8151A	Kellar, Joshua	JK
SW846 6010B	Petronchak, Nestor	NP
SW846 6020	Petronchak, Nestor	NP
SW846 7470A	Voytek, Joseph F	JFV
SW846 7471A	Voytek, Joseph F	JFV
SW846 1030	Tillotson, Ray	RT
SW846 7196A	Ross, Jon	JR
SW846 9012	Natoli, Richard A	RN
SW846 9034	Natoli, Richard A	RN
SW846 9045C	Mendoza, Julia	JM
EPA Moisture	Capece, Bill	BC

SAMPLE SUMMARY

Client: STV Incorporated

Job Number: 220-9412-1
Sdg Number: 220-9412

Lab Sample ID	Client Sample ID	Client Matrix	Date/Time Sampled	Date/Time Received
220-9412-1	W-TANK	Water	06/19/2009 1030	06/20/2009 0748
220-9412-2	W-EXC	Water	06/19/2009 1000	06/20/2009 0748
220-9412-3	S-1	Solid	06/19/2009 1045	06/20/2009 0748
220-9412-4	S-2	Solid	06/19/2009 1115	06/20/2009 0748

SAMPLE RESULTS

Client: STV Incorporated

Job Number: 220-9412-1
Sdg Number: 220-9412

Client Sample ID: **W-TANK**

Lab Sample ID: 220-9412-1
Client Matrix: Water

Date Sampled: 06/19/2009 1030
Date Received: 06/20/2009 0748

8260B Volatile Organic Compounds (GC/MS)

Method: 8260B
Preparation: 5030B
Dilution: 1.0
Date Analyzed: 06/22/2009 1416
Date Prepared: 06/22/2009 1416

Analysis Batch: 220-28342

Instrument ID: HP 5890/5971 GC/MS
Lab File ID: L5665.D
Initial Weight/Volume: 5 mL
Final Weight/Volume: 5 mL

Analyte	Result (ug/L)	Qualifier	MDL	RL
Acetone	16	*	1.0	10
Benzene	5.0	U	0.74	5.0
Bromodichloromethane	5.0	U	0.48	5.0
Bromoform	5.0	U	0.46	5.0
Bromomethane	5.0	U	2.1	5.0
Methyl Ethyl Ketone	10	U *	1.1	10
Carbon disulfide	5.0	U	0.90	5.0
Carbon tetrachloride	5.0	U	1.1	5.0
Chlorobenzene	5.0	U	0.72	5.0
Chloroethane	5.0	U	1.1	5.0
Chloroform	5.0	U	0.67	5.0
Chloromethane	5.0	U	1.1	5.0
Dibromochloromethane	5.0	U	0.55	5.0
1,1-Dichloroethane	5.0	U	1.0	5.0
1,2-Dichloroethane	5.0	U	0.72	5.0
1,1-Dichloroethene	5.0	U	0.83	5.0
1,2-Dichloropropane	5.0	U	0.71	5.0
cis-1,3-Dichloropropene	5.0	U	0.28	5.0
trans-1,3-Dichloropropene	5.0	U	0.57	5.0
Ethylbenzene	5.0	U	0.87	5.0
2-Hexanone	10	U	1.1	10
Methylene Chloride	5.0	U	0.78	5.0
methyl isobutyl ketone	10	U	0.38	10
Styrene	5.0	U	0.64	5.0
1,1,2,2-Tetrachloroethane	5.0	U	0.81	5.0
Tetrachloroethene	5.0	U	0.81	5.0
Toluene	5.0	U	0.72	5.0
1,1,1-Trichloroethane	5.0	U	0.69	5.0
1,1,2-Trichloroethane	5.0	U	0.65	5.0
Trichloroethene	5.0	U	0.62	5.0
Vinyl chloride	5.0	U	0.99	5.0
Xylenes, Total	5.0	U	2.3	5.0
cis-1,2-Dichloroethene	5.0	U	0.99	5.0
trans-1,2-Dichloroethene	5.0	U	0.76	5.0

Surrogate	%Rec	Acceptance Limits
1,2-Dichloroethane-d4 (Surr)	113	65 - 136
4-Bromofluorobenzene	115	51 - 142
Dibromofluoromethane	112	68 - 132
Toluene-d8 (Surr)	117	63 - 127

Client: STV Incorporated

Job Number: 220-9412-1
Sdg Number: 220-9412

Client Sample ID: **W-EXC**

Lab Sample ID: 220-9412-2
Client Matrix: Water

Date Sampled: 06/19/2009 1000
Date Received: 06/20/2009 0748

8260B Volatile Organic Compounds (GC/MS)

Method: 8260B
Preparation: 5030B
Dilution: 1.0
Date Analyzed: 06/22/2009 1352
Date Prepared: 06/22/2009 1352

Analysis Batch: 220-28342

Instrument ID: HP 5890/5971 GC/MS
Lab File ID: L5664.D
Initial Weight/Volume: 5 mL
Final Weight/Volume: 5 mL

Analyte	Result (ug/L)	Qualifier	MDL	RL
Acetone	6.2	J *	1.0	10
Benzene	5.0	U	0.74	5.0
Bromodichloromethane	5.0	U	0.48	5.0
Bromoform	5.0	U	0.46	5.0
Bromomethane	5.0	U	2.1	5.0
Methyl Ethyl Ketone	10	U *	1.1	10
Carbon disulfide	5.0	U	0.90	5.0
Carbon tetrachloride	5.0	U	1.1	5.0
Chlorobenzene	5.0	U	0.72	5.0
Chloroethane	5.0	U	1.1	5.0
Chloroform	5.0	U	0.67	5.0
Chloromethane	5.0	U	1.1	5.0
Dibromochloromethane	5.0	U	0.55	5.0
1,1-Dichloroethane	5.0	U	1.0	5.0
1,2-Dichloroethane	5.0	U	0.72	5.0
1,1-Dichloroethene	5.0	U	0.83	5.0
1,2-Dichloropropane	5.0	U	0.71	5.0
cis-1,3-Dichloropropene	5.0	U	0.28	5.0
trans-1,3-Dichloropropene	5.0	U	0.57	5.0
Ethylbenzene	5.0	U	0.87	5.0
2-Hexanone	10	U	1.1	10
Methylene Chloride	5.0	U	0.78	5.0
methyl isobutyl ketone	10	U	0.38	10
Styrene	5.0	U	0.64	5.0
1,1,2,2-Tetrachloroethane	5.0	U	0.81	5.0
Tetrachloroethene	5.0	U	0.81	5.0
Toluene	5.0	U	0.72	5.0
1,1,1-Trichloroethane	5.0	U	0.69	5.0
1,1,2-Trichloroethane	5.0	U	0.65	5.0
Trichloroethene	5.0	U	0.62	5.0
Vinyl chloride	5.0	U	0.99	5.0
Xylenes, Total	5.0	U	2.3	5.0
cis-1,2-Dichloroethene	5.0	U	0.99	5.0
trans-1,2-Dichloroethene	5.0	U	0.76	5.0

Surrogate	%Rec	Acceptance Limits
1,2-Dichloroethane-d4 (Surr)	113	65 - 136
4-Bromofluorobenzene	119	51 - 142
Dibromofluoromethane	114	68 - 132
Toluene-d8 (Surr)	115	63 - 127

Client: STV Incorporated

Job Number: 220-9412-1
Sdg Number: 220-9412

Client Sample ID: S-1

Lab Sample ID: 220-9412-3
Client Matrix: Solid

Date Sampled: 06/19/2009 1045
Date Received: 06/20/2009 0748

8260B Volatile Organic Compounds (GC/MS)-TCLP

Method: 8260B
Preparation: 5030B
Dilution: 1.0
Date Analyzed: 06/23/2009 1311
Date Prepared: 06/23/2009 1311
Date Leached: 06/22/2009 1032

Analysis Batch: 220-28395
Leachate Batch: 220-28315

Instrument ID: HP 6890/5973 GC/MS
Lab File ID: W6282.D
Initial Weight/Volume: 5 mL
Final Weight/Volume: 5 mL

Analyte	DryWt Corrected: N	Result (mg/L)	Qualifier	MDL	RL
Vinyl chloride		0.0050	U	0.00098	0.0050
1,1-Dichloroethene		0.0050	U	0.00083	0.0050
Methyl Ethyl Ketone		0.0084	J B	0.0011	0.010
Chloroform		0.0050	U	0.00067	0.0050
Carbon tetrachloride		0.0050	U	0.0011	0.0050
Benzene		0.00082	J	0.00074	0.0050
1,2-Dichloroethane		0.0050	U	0.00072	0.0050
Trichloroethene		0.0050	U	0.00062	0.0050
Tetrachloroethene		0.0050	U	0.00081	0.0050
Chlorobenzene		0.0050	U	0.00072	0.0050

Surrogate	%Rec	Acceptance Limits
1,2-Dichloroethane-d4 (Surr)	102	65 - 136
4-Bromofluorobenzene	108	51 - 142
Dibromofluoromethane	98	68 - 132
Toluene-d8 (Surr)	104	63 - 127

Client: STV Incorporated

Job Number: 220-9412-1
Sdg Number: 220-9412

Client Sample ID: S-1

Lab Sample ID: 220-9412-3
Client Matrix: Solid % Moisture: 56.4

Date Sampled: 06/19/2009 1045
Date Received: 06/20/2009 0748

8260B Volatile Organic Compounds (GC/MS)

Method: 8260B
Preparation: 5030B
Dilution: 5.0
Date Analyzed: 06/22/2009 1640
Date Prepared: 06/22/2009 1640

Analysis Batch: 220-28348

Instrument ID: HP 5890/5971A GC/MS
Lab File ID: O1277.D
Initial Weight/Volume: 5 g
Final Weight/Volume: 5 mL

Analyte	DryWt Corrected: Y	Result (ug/Kg)	Qualifier	MDL	RL
Acetone		210	J *	26	230
Benzene		27	J	6.5	57
Bromodichloromethane		57	U	3.4	57
Bromoform		57	U	7.0	57
Bromomethane		57	U	24	57
Methyl Ethyl Ketone		110	U	18	110
Carbon disulfide		11	J	4.7	57
Carbon tetrachloride		57	U	11	57
Chlorobenzene		57	U	6.8	57
Chloroethane		57	U	11	57
Chloroform		57	U	3.9	57
Chloromethane		57	U	8.9	57
Dibromochloromethane		57	U	4.0	57
1,1-Dichloroethane		57	U	3.4	57
1,2-Dichloroethane		57	U	6.6	57
1,1-Dichloroethene		57	U	6.6	57
1,2-Dichloropropane		57	U	7.7	57
cis-1,3-Dichloropropene		57	U	6.4	57
trans-1,3-Dichloropropene		57	U	3.1	57
Ethylbenzene		50	J	8.0	57
2-Hexanone		110	U	14	110
Methylene Chloride		100	J B	12	230
methyl isobutyl ketone		57	U	6.3	57
Styrene		57	U	1.7	57
1,1,2,2-Tetrachloroethane		390		6.0	57
Tetrachloroethene		57	U	9.3	57
Toluene		57	U	0.85	57
1,1,1-Trichloroethane		57	U	6.1	57
1,1,2-Trichloroethane		57	U	4.2	57
Trichloroethene		57	U	9.3	57
Vinyl chloride		57	U	2.6	57
Xylenes, Total		300		5.6	57
cis-1,2-Dichloroethene		57	U	4.2	57
trans-1,2-Dichloroethene		57	U	4.5	57

Surrogate	%Rec		Acceptance Limits
1,2-Dichloroethane-d4 (Surr)	73		59 - 132
4-Bromofluorobenzene	102		34 - 124
Dibromofluoromethane	64		59 - 123
Toluene-d8 (Surr)	43	*	50 - 118

Client: STV Incorporated

Job Number: 220-9412-1
Sdg Number: 220-9412

Client Sample ID: **S-2**

Lab Sample ID: 220-9412-4
Client Matrix: Solid

Date Sampled: 06/19/2009 1115
Date Received: 06/20/2009 0748

8260B Volatile Organic Compounds (GC/MS)-TCLP

Method: 8260B
Preparation: 5030B
Dilution: 1.0
Date Analyzed: 06/23/2009 1335
Date Prepared: 06/23/2009 1335
Date Leached: 06/22/2009 1032

Analysis Batch: 220-28395
Leachate Batch: 220-28315

Instrument ID: HP 6890/5973 GC/MS
Lab File ID: W6283.D
Initial Weight/Volume: 5 mL
Final Weight/Volume: 5 mL

Analyte	DryWt Corrected: N	Result (mg/L)	Qualifier	MDL	RL
Vinyl chloride		0.0050	U	0.00098	0.0050
1,1-Dichloroethene		0.0050	U	0.00083	0.0050
Methyl Ethyl Ketone		0.0085	J B	0.0011	0.010
Chloroform		0.0050	U	0.00067	0.0050
Carbon tetrachloride		0.0050	U	0.0011	0.0050
Benzene		0.0018	J	0.00074	0.0050
1,2-Dichloroethane		0.0050	U	0.00072	0.0050
Trichloroethene		0.0050	U	0.00062	0.0050
Tetrachloroethene		0.0050	U	0.00081	0.0050
Chlorobenzene		0.0050	U	0.00072	0.0050

Surrogate	%Rec	Acceptance Limits
1,2-Dichloroethane-d4 (Surr)	102	65 - 136
4-Bromofluorobenzene	108	51 - 142
Dibromofluoromethane	96	68 - 132
Toluene-d8 (Surr)	104	63 - 127

Client: STV Incorporated

Job Number: 220-9412-1
Sdg Number: 220-9412

Client Sample ID: **S-2**

Lab Sample ID: 220-9412-4
Client Matrix: Solid
% Moisture: 53.7
Date Sampled: 06/19/2009 1115
Date Received: 06/20/2009 0748

8260B Volatile Organic Compounds (GC/MS)

Method: 8260B
Preparation: 5030B
Dilution: 5.0
Date Analyzed: 06/22/2009 1705
Date Prepared: 06/22/2009 1705
Analysis Batch: 220-28348
Instrument ID: HP 5890/5971A GC/MS
Lab File ID: O1278.D
Initial Weight/Volume: 5 g
Final Weight/Volume: 5 mL

Analyte	DryWt Corrected: Y	Result (ug/Kg)	Qualifier	MDL	RL
Acetone		340	*	24	220
Benzene		10	J	6.2	54
Bromodichloromethane		54	U	3.2	54
Bromoform		54	U	6.6	54
Bromomethane		54	U	22	54
Methyl Ethyl Ketone		110	U	17	110
Carbon disulfide		20	J	4.4	54
Carbon tetrachloride		54	U	10	54
Chlorobenzene		54	U	6.4	54
Chloroethane		54	U	11	54
Chloroform		54	U	3.7	54
Chloromethane		54	U	8.4	54
Dibromochloromethane		54	U	3.8	54
1,1-Dichloroethane		54	U	3.2	54
1,2-Dichloroethane		54	U	6.3	54
1,1-Dichloroethene		54	U	6.3	54
1,2-Dichloropropane		54	U	7.2	54
cis-1,3-Dichloropropene		54	U	6.0	54
trans-1,3-Dichloropropene		54	U	2.9	54
Ethylbenzene		19	J	7.6	54
2-Hexanone		110	U	13	110
Methylene Chloride		98	J B	12	220
methyl isobutyl ketone		54	U	5.9	54
Styrene		54	U	1.6	54
1,1,2,2-Tetrachloroethane		54	U	5.6	54
Tetrachloroethene		54	U	8.7	54
Toluene		2.4	J B	0.80	54
1,1,1-Trichloroethane		54	U	5.7	54
1,1,2-Trichloroethane		54	U	4.0	54
Trichloroethene		54	U	8.7	54
Vinyl chloride		54	U	2.5	54
Xylenes, Total		90		5.2	54
cis-1,2-Dichloroethene		54	U	4.0	54
trans-1,2-Dichloroethene		54	U	4.2	54

Surrogate	%Rec	Acceptance Limits
1,2-Dichloroethane-d4 (Surr)	76	59 - 132
4-Bromofluorobenzene	91	34 - 124
Dibromofluoromethane	73	59 - 123
Toluene-d8 (Surr)	65	50 - 118

Client: STV Incorporated

Job Number: 220-9412-1
Sdg Number: 220-9412

Client Sample ID: **W-TANK**

Lab Sample ID: 220-9412-1
Client Matrix: Water

Date Sampled: 06/19/2009 1030
Date Received: 06/20/2009 0748

8270C Semivolatile Compounds by Gas Chromatography/Mass Spectrometry (GC/MS)

Method: 8270C
Preparation: 3510C
Dilution: 4.0
Date Analyzed: 06/22/2009 1226
Date Prepared: 06/20/2009 1317

Analysis Batch: 220-28334
Prep Batch: 220-28305

Instrument ID: HP 6890/5975
Lab File ID: A5735.D
Initial Weight/Volume: 960 mL
Final Weight/Volume: 1 mL
Injection Volume: 1.0 uL

Analyte	Result (ug/L)	Qualifier	MDL	RL
Acenaphthene	3.6	J	1.3	17
Acenaphthylene	2.2	J	1.4	17
Anthracene	5.4	J	1.2	17
Benzo[a]anthracene	8.6	J	1.2	17
Benzo[a]pyrene	5.3	J	1.5	17
Benzo[b]fluoranthene	4.4	J	1.5	17
Benzo[g,h,i]perylene	6.5	J	1.5	17
Benzo[k]fluoranthene	1.7	J	1.7	17
Bis(2-chloroethoxy)methane	17	U	1.3	17
Bis(2-chloroethyl)ether	17	U	1.2	17
Bis(2-ethylhexyl) phthalate	290		2.3	17
Butyl benzyl phthalate	17	U	1.5	17
Carbazole	17	U	1.4	17
Chrysene	8.3	J	1.0	17
Di-n-butyl phthalate	17	U	1.5	17
Di-n-octyl phthalate	17	U	1.6	17
4-Bromophenyl phenyl ether	17	U	1.8	17
4-Chloroaniline	17	U	1.2	17
2-Chloronaphthalene	17	U	1.6	17
4-Chlorophenyl phenyl ether	17	U	1.5	17
Dibenz(a,h)anthracene	3.1	J	1.6	17
Dibenzofuran	2.1	J	1.8	17
Diethyl phthalate	17	U	1.8	17
Dimethyl phthalate	17	U	1.6	17
1,2-Dichlorobenzene	17	U	1.3	17
1,3-Dichlorobenzene	17	U	1.0	17
1,4-Dichlorobenzene	17	U	1.3	17
3,3'-Dichlorobenzidine	17	U	1.5	17
2,4-Dinitrotoluene	17	U	1.7	17
2,6-Dinitrotoluene	17	U	1.1	17
Fluoranthene	17		1.3	17
Fluorene	3.5	J	1.1	17
Hexachlorobenzene	17	U	1.4	17
Hexachlorobutadiene	17	U	0.83	17
Hexachlorocyclopentadiene	17	U	1.5	17
Hexachloroethane	17	U	1.5	17
Indeno[1,2,3-cd]pyrene	4.0	J	1.2	17
Isophorone	17	U	1.3	17
2-Methylnaphthalene	2.5	J	1.1	17
Naphthalene	1.9	J	1.2	17
2-Nitroaniline	17	U	1.4	17
3-Nitroaniline	17	U	0.96	17
Nitrobenzene	17	U	1.2	17
N-Nitrosodi-n-propylamine	17	U	1.4	17

Client: STV Incorporated

Job Number: 220-9412-1
Sdg Number: 220-9412

Client Sample ID: **W-TANK**

Lab Sample ID: 220-9412-1
Client Matrix: Water

Date Sampled: 06/19/2009 1030
Date Received: 06/20/2009 0748

8270C Semivolatile Compounds by Gas Chromatography/Mass Spectrometry (GC/MS)

Method: 8270C
Preparation: 3510C
Dilution: 4.0
Date Analyzed: 06/22/2009 1226
Date Prepared: 06/20/2009 1317

Analysis Batch: 220-28334
Prep Batch: 220-28305

Instrument ID: HP 6890/5975
Lab File ID: A5735.D
Initial Weight/Volume: 960 mL
Final Weight/Volume: 1 mL
Injection Volume: 1.0 uL

Analyte	Result (ug/L)	Qualifier	MDL	RL
N-Nitrosodiphenylamine	17	U	1.4	17
Phenanthrene	13	J	1.2	17
Pyrene	19		1.4	17
1,2,4-Trichlorobenzene	17	U	1.5	17
4-Chloro-3-methylphenol	21	U	1.4	21
2-Chlorophenol	17	U	0.96	17
2-Methylphenol	17	U	1.0	17
4-Methylphenol	17	U	1.2	17
2,4-Dichlorophenol	17	U	1.4	17
2,4-Dimethylphenol	17	U	1.4	17
2,4-Dinitrophenol	100	U	1.8	100
4,6-Dinitro-2-methylphenol	100	U	7.8	100
2-Nitrophenol	17	U	1.1	17
4-Nitrophenol	42	U	6.0	42
Pentachlorophenol	100	U	1.3	100
Phenol	17	U	0.79	17
2,4,5-Trichlorophenol	42	U	1.2	42
2,4,6-Trichlorophenol	17	U	1.5	17
Benzyl alcohol	17	U	1.7	17
4-Nitroaniline	17	U	0.83	17
2,2'-oxybis[1-chloropropane]	17	U	1.0	17

Surrogate	%Rec	Acceptance Limits
2-Fluorobiphenyl	87	39 - 120
2-Fluorophenol	43	13 - 120
2,4,6-Tribromophenol	76	36 - 120
Nitrobenzene-d5	79	40 - 120
Phenol-d5	35	10 - 120
Terphenyl-d14	68	10 - 120

Client: STV Incorporated

Job Number: 220-9412-1
Sdg Number: 220-9412

Client Sample ID: **W-EXC**

Lab Sample ID: 220-9412-2
Client Matrix: Water

Date Sampled: 06/19/2009 1000
Date Received: 06/20/2009 0748

8270C Semivolatile Compounds by Gas Chromatography/Mass Spectrometry (GC/MS)

Method: 8270C
Preparation: 3510C
Dilution: 1.0
Date Analyzed: 06/22/2009 1107
Date Prepared: 06/20/2009 1317

Analysis Batch: 220-28334
Prep Batch: 220-28305

Instrument ID: HP 6890/5975
Lab File ID: A5732.D
Initial Weight/Volume: 970 mL
Final Weight/Volume: 1 mL
Injection Volume: 1.0 uL

Analyte	Result (ug/L)	Qualifier	MDL	RL
Acenaphthene	0.66	J	0.32	4.1
Acenaphthylene	4.1	U	0.35	4.1
Anthracene	0.56	J	0.30	4.1
Benzo[a]anthracene	0.74	J	0.31	4.1
Benzo[a]pyrene	0.60	J	0.36	4.1
Benzo[b]fluoranthene	0.52	J	0.37	4.1
Benzo[g,h,i]perylene	1.6	J	0.37	4.1
Benzo[k]fluoranthene	4.1	U	0.41	4.1
Bis(2-chloroethoxy)methane	4.1	U	0.32	4.1
Bis(2-chloroethyl)ether	4.1	U	0.30	4.1
Bis(2-ethylhexyl) phthalate	17		0.56	4.1
Butyl benzyl phthalate	4.1	U	0.36	4.1
Carbazole	4.1	U	0.34	4.1
Chrysene	0.66	J	0.26	4.1
Di-n-butyl phthalate	0.40	J	0.36	4.1
Di-n-octyl phthalate	4.1	U	0.39	4.1
4-Bromophenyl phenyl ether	4.1	U	0.45	4.1
4-Chloroaniline	4.1	U	0.30	4.1
2-Chloronaphthalene	4.1	U	0.40	4.1
4-Chlorophenyl phenyl ether	4.1	U	0.36	4.1
Dibenz(a,h)anthracene	4.1	U	0.39	4.1
Dibenzofuran	4.1	U	0.44	4.1
Diethyl phthalate	4.1	U	0.44	4.1
Dimethyl phthalate	4.1	U	0.39	4.1
1,2-Dichlorobenzene	4.1	U	0.32	4.1
1,3-Dichlorobenzene	4.1	U	0.26	4.1
1,4-Dichlorobenzene	4.1	U	0.32	4.1
3,3'-Dichlorobenzidine	4.1	U	0.37	4.1
2,4-Dinitrotoluene	4.1	U	0.41	4.1
2,6-Dinitrotoluene	4.1	U	0.27	4.1
Fluoranthene	1.7	J	0.32	4.1
Fluorene	0.57	J	0.27	4.1
Hexachlorobenzene	4.1	U	0.34	4.1
Hexachlorobutadiene	4.1	U	0.21	4.1
Hexachlorocyclopentadiene	4.1	U	0.36	4.1
Hexachloroethane	4.1	U	0.38	4.1
Indeno[1,2,3-cd]pyrene	0.92	J	0.29	4.1
Isophorone	4.1	U	0.32	4.1
2-Methylnaphthalene	4.1	U	0.28	4.1
Naphthalene	0.38	J	0.31	4.1
2-Nitroaniline	4.1	U	0.35	4.1
3-Nitroaniline	4.1	U	0.24	4.1
Nitrobenzene	4.1	U	0.29	4.1
N-Nitrosodi-n-propylamine	4.1	U	0.34	4.1

Client: STV Incorporated

Job Number: 220-9412-1
Sdg Number: 220-9412

Client Sample ID: **W-EXC**

Lab Sample ID: 220-9412-2
Client Matrix: Water

Date Sampled: 06/19/2009 1000
Date Received: 06/20/2009 0748

8270C Semivolatile Compounds by Gas Chromatography/Mass Spectrometry (GC/MS)

Method: 8270C
Preparation: 3510C
Dilution: 1.0
Date Analyzed: 06/22/2009 1107
Date Prepared: 06/20/2009 1317

Analysis Batch: 220-28334
Prep Batch: 220-28305

Instrument ID: HP 6890/5975
Lab File ID: A5732.D
Initial Weight/Volume: 970 mL
Final Weight/Volume: 1 mL
Injection Volume: 1.0 uL

Analyte	Result (ug/L)	Qualifier	MDL	RL
N-Nitrosodiphenylamine	4.1	U	0.34	4.1
Phenanthrene	1.4	J	0.29	4.1
Pyrene	2.2	J	0.34	4.1
1,2,4-Trichlorobenzene	4.1	U	0.37	4.1
4-Chloro-3-methylphenol	5.2	U	0.35	5.2
2-Chlorophenol	4.1	U	0.24	4.1
2-Methylphenol	4.1	U	0.25	4.1
4-Methylphenol	4.1	U	0.30	4.1
2,4-Dichlorophenol	4.1	U	0.34	4.1
2,4-Dimethylphenol	4.1	U	0.34	4.1
2,4-Dinitrophenol	26	U	0.44	26
4,6-Dinitro-2-methylphenol	26	U	1.9	26
2-Nitrophenol	4.1	U	0.28	4.1
4-Nitrophenol	10	U	1.5	10
Pentachlorophenol	26	U	0.32	26
Phenol	4.1	U	0.20	4.1
2,4,5-Trichlorophenol	10	U	0.29	10
2,4,6-Trichlorophenol	4.1	U	0.38	4.1
Benzyl alcohol	4.1	U	0.42	4.1
4-Nitroaniline	4.1	U	0.21	4.1
2,2'-oxybis[1-chloropropane]	4.1	U	0.26	4.1

Surrogate	%Rec	Acceptance Limits
2-Fluorobiphenyl	73	39 - 120
2-Fluorophenol	37	13 - 120
2,4,6-Tribromophenol	66	36 - 120
Nitrobenzene-d5	71	40 - 120
Phenol-d5	29	10 - 120
Terphenyl-d14	72	10 - 120

Client: STV Incorporated

Job Number: 220-9412-1
Sdg Number: 220-9412

Client Sample ID: S-1

Lab Sample ID: 220-9412-3
Client Matrix: Solid

Date Sampled: 06/19/2009 1045
Date Received: 06/20/2009 0748

8270C Semivolatile Compounds by Gas Chromatography/Mass Spectrometry (GC/MS)-TCLP

Method: 8270C
Preparation: 3510C
Dilution: 1.0
Date Analyzed: 06/24/2009 1523
Date Prepared: 06/24/2009 0907
Date Leached: 06/22/2009 1600

Analysis Batch: 220-28470
Prep Batch: 220-28419
Leachate Batch: 220-28369

Instrument ID: HP 6890/5975
Lab File ID: A5794.D
Initial Weight/Volume: 250 mL
Final Weight/Volume: 0.5 mL
Injection Volume: 1.0 uL

Analyte	DryWt Corrected: N	Result (mg/L)	Qualifier	MDL	RL
1,4-Dichlorobenzene		0.020	U	0.00062	0.020
2,4-Dinitrotoluene		0.020	U	0.00080	0.020
2,4,5-Trichlorophenol		0.10	U	0.00056	0.10
2,4,6-Trichlorophenol		0.020	U	0.00074	0.020
2-Methylphenol		0.020	U	0.00048	0.020
Hexachlorobenzene		0.020	U	0.00066	0.020
Hexachlorobutadiene		0.020	U	0.00040	0.020
Hexachloroethane		0.020	U	0.00074	0.020
Nitrobenzene		0.020	U	0.00056	0.020
Pentachlorophenol		0.10	U	0.00062	0.10
Pyridine		0.040	U	0.0077	0.040
4-Methylphenol		0.020	U	0.00058	0.020

Surrogate	%Rec	Acceptance Limits
2,4,6-Tribromophenol	86	29 - 126
2-Fluorobiphenyl	64	43 - 116
2-Fluorophenol	60	21 - 97
Nitrobenzene-d5	68	38 - 113
Terphenyl-d14	92	10 - 119
Phenol-d5	57	18 - 97

Client: STV Incorporated

Job Number: 220-9412-1
Sdg Number: 220-9412

Client Sample ID: S-1

Lab Sample ID: 220-9412-3
Client Matrix: Solid
% Moisture: 56.4

Date Sampled: 06/19/2009 1045
Date Received: 06/20/2009 0748

8270C Semivolatile Compounds by Gas Chromatography/Mass Spectrometry (GC/MS)

Method: 8270C
Preparation: 3541
Dilution: 20
Date Analyzed: 06/23/2009 1228
Date Prepared: 06/20/2009 1110

Analysis Batch: 220-28390
Prep Batch: 220-28293

Instrument ID: HP 6890/5973 GC/MS
Lab File ID: Z11432.D
Initial Weight/Volume: 15.19 g
Final Weight/Volume: 1 mL
Injection Volume: 1.0 uL

Analyte	DryWt Corrected: Y	Result (ug/Kg)	Qualifier	MDL	RL
Acenaphthene		2000	J	720	12000
Acenaphthylene		12000	U	600	12000
Anthracene		5000	J	480	12000
Benzo[a]anthracene		6200	J	430	12000
Benzo[a]pyrene		6400	J	330	12000
Benzo[b]fluoranthene		5000	J	330	12000
Benzo[g,h,i]perylene		11000	J	800	12000
Benzo[k]fluoranthene		1900	J	1100	12000
Bis(2-chloroethoxy)methane		12000	U	570	12000
Bis(2-chloroethyl)ether		12000	U	630	12000
Bis(2-ethylhexyl) phthalate		130000		1200	12000
Butyl benzyl phthalate		12000	U	680	12000
Carbazole		12000	U	680	12000
Chrysene		6900	J	900	12000
Di-n-butyl phthalate		12000	U	1800	12000
Di-n-octyl phthalate		12000	U	690	12000
4-Bromophenyl phenyl ether		12000	U	790	12000
4-Chloroaniline		12000	U	2000	12000
2-Chloronaphthalene		12000	U	520	12000
4-Chlorophenyl phenyl ether		12000	U	900	12000
Dibenz(a,h)anthracene		11000	J	960	12000
Dibenzofuran		1500	J	860	12000
Diethyl phthalate		12000	U	1200	12000
Dimethyl phthalate		12000	U	700	12000
1,2-Dichlorobenzene		12000	U	720	12000
1,3-Dichlorobenzene		12000	U	610	12000
1,4-Dichlorobenzene		12000	U	720	12000
3,3'-Dichlorobenzidine		30000	U	2500	30000
2,4-Dinitrotoluene		12000	U	970	12000
2,6-Dinitrotoluene		12000	U	360	12000
Fluoranthene		12000	J	610	12000
Fluorene		2800	J	730	12000
Hexachlorobenzene		12000	U	850	12000
Hexachlorobutadiene		12000	U	940	12000
Hexachlorocyclopentadiene		30000	U	5700	30000
Hexachloroethane		12000	U	700	12000
Indeno[1,2,3-cd]pyrene		14000		790	12000
Isophorone		12000	U	670	12000
2-Methylnaphthalene		6000	J	350	12000
Naphthalene		3300	J	630	12000
2-Nitroaniline		77000	U	740	77000
3-Nitroaniline		77000	U	390	77000
Nitrobenzene		12000	U	780	12000
N-Nitrosodi-n-propylamine		12000	U	820	12000

Client: STV Incorporated

Job Number: 220-9412-1
Sdg Number: 220-9412

Client Sample ID: S-1

Lab Sample ID: 220-9412-3
Client Matrix: Solid % Moisture: 56.4

Date Sampled: 06/19/2009 1045
Date Received: 06/20/2009 0748

8270C Semivolatile Compounds by Gas Chromatography/Mass Spectrometry (GC/MS)

Method: 8270C
Preparation: 3541
Dilution: 20
Date Analyzed: 06/23/2009 1228
Date Prepared: 06/20/2009 1110

Analysis Batch: 220-28390
Prep Batch: 220-28293

Instrument ID: HP 6890/5973 GC/MS
Lab File ID: Z11432.D
Initial Weight/Volume: 15.19 g
Final Weight/Volume: 1 mL
Injection Volume: 1.0 uL

Analyte	DryWt Corrected: Y Result (ug/Kg)	Qualifier	MDL	RL
N-Nitrosodiphenylamine	12000	U	690	12000
Phenanthrene	14000		600	12000
Pyrene	19000		570	12000
1,2,4-Trichlorobenzene	12000	U	800	12000
4-Chloro-3-methylphenol	12000	U	500	12000
2-Chlorophenol	12000	U	710	12000
2-Methylphenol	12000	U	730	12000
4-Methylphenol	12000	U	800	12000
2,4-Dichlorophenol	12000	U	650	12000
2,4-Dimethylphenol	12000	U	590	12000
2,4-Dinitrophenol	77000	U *	3700	77000
4,6-Dinitro-2-methylphenol	77000	U *	5200	77000
2-Nitrophenol	12000	U	770	12000
4-Nitrophenol	77000	U	920	77000
Pentachlorophenol	77000	U	7400	77000
Phenol	12000	U	810	12000
2,4,5-Trichlorophenol	77000	U	620	77000
2,4,6-Trichlorophenol	12000	U	330	12000
Benzyl alcohol	12000	U	1200	12000
4-Nitroaniline	12000	U	940	12000
2,2'-oxybis[1-chloropropane]	12000	U	630	12000

Surrogate	%Rec	Acceptance Limits
2-Fluorobiphenyl	92	41 - 120
2-Fluorophenol	80	34 - 120
2,4,6-Tribromophenol	94	37 - 120
Nitrobenzene-d5	93	38 - 120
Phenol-d5	95	36 - 120
Terphenyl-d14	87	32 - 125

Client: STV Incorporated

Job Number: 220-9412-1
Sdg Number: 220-9412

Client Sample ID: **S-2**

Lab Sample ID: 220-9412-4
Client Matrix: Solid

Date Sampled: 06/19/2009 1115
Date Received: 06/20/2009 0748

8270C Semivolatile Compounds by Gas Chromatography/Mass Spectrometry (GC/MS)-TCLP

Method: 8270C
Preparation: 3510C
Dilution: 1.0
Date Analyzed: 06/24/2009 1549
Date Prepared: 06/24/2009 0907
Date Leached: 06/22/2009 1600

Analysis Batch: 220-28470
Prep Batch: 220-28419
Leachate Batch: 220-28369

Instrument ID: HP 6890/5975
Lab File ID: A5795.D
Initial Weight/Volume: 250 mL
Final Weight/Volume: 0.5 mL
Injection Volume: 1.0 uL

Analyte	DryWt Corrected: N	Result (mg/L)	Qualifier	MDL	RL
1,4-Dichlorobenzene		0.020	U	0.00062	0.020
2,4-Dinitrotoluene		0.020	U	0.00080	0.020
2,4,5-Trichlorophenol		0.10	U	0.00056	0.10
2,4,6-Trichlorophenol		0.020	U	0.00074	0.020
2-Methylphenol		0.020	U	0.00048	0.020
Hexachlorobenzene		0.020	U	0.00066	0.020
Hexachlorobutadiene		0.020	U	0.00040	0.020
Hexachloroethane		0.020	U	0.00074	0.020
Nitrobenzene		0.020	U	0.00056	0.020
Pentachlorophenol		0.10	U	0.00062	0.10
Pyridine		0.040	U	0.0077	0.040
4-Methylphenol		0.020	U	0.00058	0.020

Surrogate	%Rec	Acceptance Limits
2,4,6-Tribromophenol	85	29 - 126
2-Fluorobiphenyl	60	43 - 116
2-Fluorophenol	54	21 - 97
Nitrobenzene-d5	64	38 - 113
Terphenyl-d14	88	10 - 119
Phenol-d5	52	18 - 97

Client: STV Incorporated

Job Number: 220-9412-1
Sdg Number: 220-9412

Client Sample ID: S-2

Lab Sample ID: 220-9412-4
Client Matrix: Solid % Moisture: 53.7

Date Sampled: 06/19/2009 1115
Date Received: 06/20/2009 0748

8270C Semivolatile Compounds by Gas Chromatography/Mass Spectrometry (GC/MS)

Method: 8270C
Preparation: 3541
Dilution: 20
Date Analyzed: 06/23/2009 1255
Date Prepared: 06/22/2009 1437

Analysis Batch: 220-28390
Prep Batch: 220-28343

Instrument ID: HP 6890/5973 GC/MS
Lab File ID: Z11433.D
Initial Weight/Volume: 15.18 g
Final Weight/Volume: 1 mL
Injection Volume: 1.0 uL

Analyte	DryWt Corrected: Y	Result (ug/Kg)	Qualifier	MDL	RL
Acenaphthene		2400	J	680	12000
Acenaphthylene		2100	J	560	12000
Anthracene		7500	J	450	12000
Benzo[a]anthracene		8900	J	410	12000
Benzo[a]pyrene		7200	J	310	12000
Benzo[b]fluoranthene		5300	J	310	12000
Benzo[g,h,i]perylene		11000	J	750	12000
Benzo[k]fluoranthene		1800	J	1000	12000
Bis(2-chloroethoxy)methane		12000	U	530	12000
Bis(2-chloroethyl)ether		12000	U	600	12000
Bis(2-ethylhexyl) phthalate		110000		1100	12000
Butyl benzyl phthalate		12000	U	640	12000
Carbazole		12000	U	640	12000
Chrysene		9200	J	850	12000
Di-n-butyl phthalate		12000	U	1700	12000
Di-n-octyl phthalate		12000	U	650	12000
4-Bromophenyl phenyl ether		12000	U	740	12000
4-Chloroaniline		12000	U	1900	12000
2-Chloronaphthalene		12000	U	490	12000
4-Chlorophenyl phenyl ether		12000	U	850	12000
Dibenz(a,h)anthracene		11000	J	910	12000
Dibenzofuran		1400	J	810	12000
Diethyl phthalate		12000	U	1200	12000
Dimethyl phthalate		12000	U	660	12000
1,2-Dichlorobenzene		12000	U	680	12000
1,3-Dichlorobenzene		12000	U	580	12000
1,4-Dichlorobenzene		12000	U	680	12000
3,3'-Dichlorobenzidine		29000	U	2400	29000
2,4-Dinitrotoluene		12000	U	920	12000
2,6-Dinitrotoluene		12000	U	340	12000
Fluoranthene		15000		570	12000
Fluorene		1700	J	690	12000
Hexachlorobenzene		12000	U	800	12000
Hexachlorobutadiene		12000	U	890	12000
Hexachlorocyclopentadiene		29000	U	5400	29000
Hexachloroethane		12000	U	660	12000
Indeno[1,2,3-cd]pyrene		14000		750	12000
Isophorone		12000	U	640	12000
2-Methylnaphthalene		2200	J	330	12000
Naphthalene		2900	J	600	12000
2-Nitroaniline		73000	U	700	73000
3-Nitroaniline		73000	U	370	73000
Nitrobenzene		12000	U	730	12000
N-Nitrosodi-n-propylamine		12000	U	780	12000

Client: STV Incorporated

Job Number: 220-9412-1
Sdg Number: 220-9412

Client Sample ID: S-2

Lab Sample ID: 220-9412-4
Client Matrix: Solid % Moisture: 53.7

Date Sampled: 06/19/2009 1115
Date Received: 06/20/2009 0748

8270C Semivolatile Compounds by Gas Chromatography/Mass Spectrometry (GC/MS)

Method: 8270C
Preparation: 3541
Dilution: 20
Date Analyzed: 06/23/2009 1255
Date Prepared: 06/22/2009 1437

Analysis Batch: 220-28390
Prep Batch: 220-28343

Instrument ID: HP 6890/5973 GC/MS
Lab File ID: Z11433.D
Initial Weight/Volume: 15.18 g
Final Weight/Volume: 1 mL
Injection Volume: 1.0 uL

Analyte	DryWt Corrected: Y	Result (ug/Kg)	Qualifier	MDL	RL
N-Nitrosodiphenylamine		12000	U	650	12000
Phenanthrene		8700	J	570	12000
Pyrene		21000		540	12000
1,2,4-Trichlorobenzene		12000	U	760	12000
4-Chloro-3-methylphenol		12000	U	470	12000
2-Chlorophenol		12000	U	670	12000
2-Methylphenol		12000	U	690	12000
4-Methylphenol		12000	U	760	12000
2,4-Dichlorophenol		12000	U	610	12000
2,4-Dimethylphenol		12000	U	560	12000
2,4-Dinitrophenol		73000	U	3500	73000
4,6-Dinitro-2-methylphenol		73000	U	5000	73000
2-Nitrophenol		12000	U	730	12000
4-Nitrophenol		73000	U	870	73000
Pentachlorophenol		73000	U	7000	73000
Phenol		12000	U	760	12000
2,4,5-Trichlorophenol		73000	U	580	73000
2,4,6-Trichlorophenol		12000	U	320	12000
Benzyl alcohol		12000	U	1100	12000
4-Nitroaniline		12000	U	880	12000
2,2'-oxybis[1-chloropropane]		12000	U	600	12000

Surrogate	%Rec	Acceptance Limits
2-Fluorobiphenyl	75	41 - 120
2-Fluorophenol	73	34 - 120
2,4,6-Tribromophenol	83	37 - 120
Nitrobenzene-d5	67	38 - 120
Phenol-d5	74	36 - 120
Terphenyl-d14	68	32 - 125

Client: STV Incorporated

Job Number: 220-9412-1
Sdg Number: 220-9412

Client Sample ID: **W-TANK**

Lab Sample ID: 220-9412-1
Client Matrix: Water

Date Sampled: 06/19/2009 1030
Date Received: 06/20/2009 0748

8015B Gasoline Range Organics - (GC)

Method: 8015B
Preparation: 5030B
Dilution: 1.0
Date Analyzed: 06/25/2009 1843
Date Prepared: 06/25/2009 1843

Analysis Batch: 680-141418

Instrument ID: GC Volatiles - W FID1
Lab File ID: W062507.D
Initial Weight/Volume: 20 mL
Final Weight/Volume: 20 mL
Injection Volume:
Column ID: PRIMARY

Analyte	Result (mg/L)	Qualifier	MDL	RL
Gasoline Range Organics (GRO)-C6-C10	0.018	J	0.011	0.050

Surrogate	%Rec	Acceptance Limits
a,a,a-Trifluorotoluene	98	66 - 125

Client: STV Incorporated

Job Number: 220-9412-1
Sdg Number: 220-9412

Client Sample ID: **W-EXC**

Lab Sample ID: 220-9412-2
Client Matrix: Water

Date Sampled: 06/19/2009 1000
Date Received: 06/20/2009 0748

8015B Gasoline Range Organics - (GC)

Method: 8015B
Preparation: 5030B
Dilution: 1.0
Date Analyzed: 06/25/2009 1910
Date Prepared: 06/25/2009 1910

Analysis Batch: 680-141418

Instrument ID: GC Volatiles - W FID1
Lab File ID: W062508.D
Initial Weight/Volume: 20 mL
Final Weight/Volume: 20 mL
Injection Volume:
Column ID: PRIMARY

Analyte	Result (mg/L)	Qualifier	MDL	RL
Gasoline Range Organics (GRO)-C6-C10	0.050	U	0.011	0.050

Surrogate	%Rec	Acceptance Limits
a,a,a-Trifluorotoluene	100	66 - 125

Client: STV Incorporated

Job Number: 220-9412-1
Sdg Number: 220-9412

Client Sample ID: **S-1**

Lab Sample ID: 220-9412-3
Client Matrix: Solid

% Moisture: 56.4

Date Sampled: 06/19/2009 1045
Date Received: 06/20/2009 0748

8015B Gasoline Range Organics - (GC)

Method: 8015B
Preparation: 5030A
Dilution: 20
Date Analyzed: 06/25/2009 1314
Date Prepared: 06/25/2009 1314

Analysis Batch: 680-141384

Instrument ID: GC Volatiles - W FID1
Lab File ID: W062503.D
Initial Weight/Volume: 5 mL
Final Weight/Volume: 5 mL
Injection Volume:
Column ID: PRIMARY

Analyte	DryWt Corrected: Y	Result (mg/Kg)	Qualifier	MDL	RL
Gasoline Range Organics (GRO)-C6-C10		28		0.87	11

Surrogate	%Rec	Acceptance Limits
a,a,a-Trifluorotoluene	60	53 - 121

Client: STV Incorporated

Job Number: 220-9412-1
Sdg Number: 220-9412

Client Sample ID: **S-2**

Lab Sample ID: 220-9412-4
Client Matrix: Solid

% Moisture: 53.7

Date Sampled: 06/19/2009 1115
Date Received: 06/20/2009 0748

8015B Gasoline Range Organics - (GC)

Method: 8015B
Preparation: 5030A
Dilution: 20
Date Analyzed: 06/25/2009 1338
Date Prepared: 06/25/2009 1338

Analysis Batch: 680-141384

Instrument ID: GC Volatiles - W FID1
Lab File ID: W062504.D
Initial Weight/Volume: 5 mL
Final Weight/Volume: 5 mL
Injection Volume:
Column ID: PRIMARY

Analyte	DryWt Corrected: Y	Result (mg/Kg)	Qualifier	MDL	RL
Gasoline Range Organics (GRO)-C6-C10		50		0.82	11

Surrogate	%Rec	Acceptance Limits
a,a,a-Trifluorotoluene	66	53 - 121

Client: STV Incorporated

Job Number: 220-9412-1
Sdg Number: 220-9412

Client Sample ID: **W-TANK**

Lab Sample ID: 220-9412-1
Client Matrix: Water

Date Sampled: 06/19/2009 1030
Date Received: 06/20/2009 0748

8015B Diesel Range Organics (DRO) (GC)

Method: 8015B
Preparation: 3510C
Dilution: 10
Date Analyzed: 06/25/2009 0027
Date Prepared: 06/20/2009 1314

Analysis Batch: 220-28491
Prep Batch: 220-28304

Instrument ID: HP5890 with FID/NPD
Lab File ID: C2563013.d
Initial Weight/Volume: 1000 mL
Final Weight/Volume: 1 mL
Injection Volume: 1 uL
Column ID: PRIMARY

Analyte	Result (ug/L)	Qualifier	RL	RL
Diesel Range Organics [C10-C28]	11000		5000	5000

Surrogate	%Rec	Acceptance Limits
o-Terphenyl	91	24 - 132

Client: STV Incorporated

Job Number: 220-9412-1
Sdg Number: 220-9412

Client Sample ID: **W-TANK**

Lab Sample ID: 220-9412-1
Client Matrix: Water

Date Sampled: 06/19/2009 1030
Date Received: 06/20/2009 0748

8015B Hydrocarbon Product Identification (GC)

Method: 8015B
Preparation: 3510C
Dilution: 1.0
Date Analyzed: 06/22/2009 0517
Date Prepared: 06/20/2009 1314

Analysis Batch: 220-28034
Prep Batch: 220-28304

Instrument ID: HP5890 with FID/NPD
Lab File ID: C2561438.d
Initial Weight/Volume: 1000 mL
Final Weight/Volume: 1 mL
Injection Volume: 1 uL
Column ID: PRIMARY

Surrogate	%Rec	Acceptance Limits
o-Terphenyl	126	24 - 132

Client: STV Incorporated

Job Number: 220-9412-1
Sdg Number: 220-9412

Client Sample ID: **W-EXC**

Lab Sample ID: 220-9412-2
Client Matrix: Water

Date Sampled: 06/19/2009 1000
Date Received: 06/20/2009 0748

8015B Diesel Range Organics (DRO) (GC)

Method: 8015B
Preparation: 3510C
Dilution: 1.0
Date Analyzed: 06/25/2009 0054
Date Prepared: 06/20/2009 1314

Analysis Batch: 220-28491
Prep Batch: 220-28304

Instrument ID: HP5890 with FID/NPD
Lab File ID: C2563014.d
Initial Weight/Volume: 1000 mL
Final Weight/Volume: 1 mL
Injection Volume: 1 uL
Column ID: PRIMARY

Analyte	Result (ug/L)	Qualifier	RL	RL
Diesel Range Organics [C10-C28]	890		500	500

Surrogate	%Rec	Acceptance Limits
o-Terphenyl	57	24 - 132

Client: STV Incorporated

Job Number: 220-9412-1
Sdg Number: 220-9412

Client Sample ID: **W-EXC**

Lab Sample ID: 220-9412-2
Client Matrix: Water

Date Sampled: 06/19/2009 1000
Date Received: 06/20/2009 0748

8015B Hydrocarbon Product Identification (GC)

Method: 8015B
Preparation: 3510C
Dilution: 1.0
Date Analyzed: 06/22/2009 0544
Date Prepared: 06/20/2009 1314

Analysis Batch: 220-28034
Prep Batch: 220-28304

Instrument ID: HP5890 with FID/NPD
Lab File ID: C2561439.d
Initial Weight/Volume: 1000 mL
Final Weight/Volume: 1 mL
Injection Volume: 1 uL
Column ID: PRIMARY

Surrogate	%Rec	Acceptance Limits
o-Terphenyl	62	24 - 132

Client: STV Incorporated

Job Number: 220-9412-1
Sdg Number: 220-9412

Client Sample ID: S-1

Lab Sample ID: 220-9412-3
Client Matrix: Solid

% Moisture: 56.4

Date Sampled: 06/19/2009 1045
Date Received: 06/20/2009 0748

8015B Diesel Range Organics (DRO) (GC)

Method: 8015B
Preparation: 3550B
Dilution: 25
Date Analyzed: 06/25/2009 0121
Date Prepared: 06/20/2009 1131

Analysis Batch: 220-28491
Prep Batch: 220-28294

Instrument ID: HP5890 with FID/NPD
Lab File ID: C2563015.d
Initial Weight/Volume: 30.47 g
Final Weight/Volume: 1 mL
Injection Volume: 1 uL
Column ID: PRIMARY

Analyte	DryWt Corrected: Y	Result (ug/Kg)	Qualifier	RL	RL
Diesel Range Organics [C10-C28]		5100000		960000	960000

Surrogate	%Rec		Acceptance Limits
o-Terphenyl	0	*	28 - 146

Client: STV Incorporated

Job Number: 220-9412-1
Sdg Number: 220-9412

Client Sample ID: **S-2**

Lab Sample ID: 220-9412-4
Client Matrix: Solid

% Moisture: 53.7

Date Sampled: 06/19/2009 1115
Date Received: 06/20/2009 0748

8015B Diesel Range Organics (DRO) (GC)

Method: 8015B
Preparation: 3550B
Dilution: 100
Date Analyzed: 06/25/2009 0148
Date Prepared: 06/20/2009 1131

Analysis Batch: 220-28491
Prep Batch: 220-28294

Instrument ID: HP5890 with FID/NPD
Lab File ID: C2563016.d
Initial Weight/Volume: 30.53 g
Final Weight/Volume: 1 mL
Injection Volume: 1 uL
Column ID: PRIMARY

Analyte	DryWt Corrected: Y	Result (ug/Kg)	Qualifier	RL	RL
Diesel Range Organics [C10-C28]		7000000		3600000	3600000

Surrogate	%Rec		Acceptance Limits
o-Terphenyl	0	*	28 - 146

Client: STV Incorporated

Job Number: 220-9412-1
Sdg Number: 220-9412

Client Sample ID: **S-1**

Lab Sample ID: 220-9412-3
Client Matrix: Solid

Date Sampled: 06/19/2009 1045
Date Received: 06/20/2009 0748

8081A Organochlorine Pesticides (GC)-TCLP

Method: 8081A
Preparation: 3510C
Dilution: 1.0
Date Analyzed: 06/25/2009 0143
Date Prepared: 06/23/2009 1238
Date Leached: 06/22/2009 1600

Analysis Batch: 220-28488
Prep Batch: 220-28387
Leachate Batch: 220-28369

Instrument ID: HP 6890 dual ECD
Lab File ID: C8418025.D
Initial Weight/Volume: 200 mL
Final Weight/Volume: 10 mL
Injection Volume: 1.0 uL
Column ID: PRIMARY

Analyte	DryWt Corrected: N	Result (mg/L)	Qualifier	MDL	RL
Chlordane (technical)		0.0025	U	0.00021	0.0025
Endrin		0.00050	U	0.000068	0.00050
Heptachlor		0.00025	U	0.000030	0.00025
Heptachlor epoxide		0.00025	U	0.000028	0.00025
gamma-BHC (Lindane)		0.00025	U	0.000028	0.00025
Methoxychlor		0.0025	U *	0.00041	0.0025
Toxaphene		0.012	U	0.00020	0.012

Surrogate	%Rec	Acceptance Limits
DCB Decachlorobiphenyl	70	29 - 156
Tetrachloro-m-xylene	90	53 - 144

Method: 8081A
Preparation: 3510C
Dilution: 1.0
Date Analyzed: 06/25/2009 0143
Date Prepared: 06/23/2009 1238
Date Leached: 06/22/2009 1600

Analysis Batch: 220-28488
Prep Batch: 220-28387
Leachate Batch: 220-28369

Instrument ID: HP 6890 dual ECD
Lab File ID: D8418025.D
Initial Weight/Volume: 200 mL
Final Weight/Volume: 10 mL
Injection Volume: 1.0 uL
Column ID: SECONDARY

Surrogate	%Rec	Acceptance Limits
DCB Decachlorobiphenyl	67	29 - 156
Tetrachloro-m-xylene	86	53 - 144

Client: STV Incorporated

Job Number: 220-9412-1
Sdg Number: 220-9412

Client Sample ID: **S-1**

Lab Sample ID: 220-9412-3
Client Matrix: Solid % Moisture: 56.4

Date Sampled: 06/19/2009 1045
Date Received: 06/20/2009 0748

8081A Organochlorine Pesticides (GC)

Method: 8081A
Preparation: 3550B
Dilution: 5.0
Date Analyzed: 06/23/2009 1625
Date Prepared: 06/20/2009 1207

Analysis Batch: 220-28430
Prep Batch: 220-28296

Instrument ID: HP 5890 with dual ECD
Lab File ID: D7733047.D
Initial Weight/Volume: 30.04 g
Final Weight/Volume: 10 mL
Injection Volume: 1.0 uL
Column ID: PRIMARY

Analyte	DryWt Corrected: Y	Result (ug/Kg)	Qualifier	MDL	RL
4,4'-DDD		310		6.8	38
4,4'-DDE		130		7.7	38
4,4'-DDT		410	*	9.3	38
Aldrin		6.4	J	2.1	19
alpha-BHC		19	U	2.8	19
beta-BHC		18	J	4.3	19
delta-BHC		19	U	4.2	19
Dieldrin		180		6.5	38
Endosulfan I		19	U	3.3	19
Endosulfan II		38	U	7.1	38
Endosulfan sulfate		38	U	6.8	38
Endrin		270		7.1	38
Endrin ketone		76		6.9	38
gamma-BHC (Lindane)		19	U	3.3	19
Heptachlor		41		3.6	19
Heptachlor epoxide		27		3.4	19
Methoxychlor		96	J *	42	190
Toxaphene		950	U	100	950
alpha-Chlordane		61		3.1	19
gamma-Chlordane		94		6.1	19

Surrogate	%Rec		Acceptance Limits
DCB Decachlorobiphenyl	399	*	25 - 159
Tetrachloro-m-xylene	111		24 - 154

Method: 8081A
Preparation: 3550B
Dilution: 5.0
Date Analyzed: 06/23/2009 1625
Date Prepared: 06/20/2009 1207

Analysis Batch: 220-28430
Prep Batch: 220-28296

Instrument ID: HP 5890 with dual ECD
Lab File ID: C7733047.D
Initial Weight/Volume: 30.04 g
Final Weight/Volume: 10 mL
Injection Volume: 1.0 uL
Column ID: SECONDARY

Surrogate	%Rec		Acceptance Limits
DCB Decachlorobiphenyl	379	*	25 - 159
Tetrachloro-m-xylene	108		24 - 154

Client: STV Incorporated

Job Number: 220-9412-1
Sdg Number: 220-9412

Client Sample ID: S-1

Lab Sample ID: 220-9412-3
Client Matrix: Solid

% Moisture: 56.4

Date Sampled: 06/19/2009 1045
Date Received: 06/20/2009 0748

8081A Organochlorine Pesticides (GC)

Method: 8081A
Preparation: 3550B
Dilution: 5.0
Date Analyzed: 06/23/2009 2024
Date Prepared: 06/20/2009 1207

Analysis Batch: 220-28430
Prep Batch: 220-28296

Instrument ID: HP 5890 with dual ECD
Lab File ID: D7733056.D
Initial Weight/Volume: 30.04 g
Final Weight/Volume: 10 mL
Injection Volume: 1.0 uL
Column ID: PRIMARY

Analyte	DryWt Corrected: Y	Result (ug/Kg)	Qualifier	MDL	RL
Endrin aldehyde		75		4.7	38

Client: STV Incorporated

Job Number: 220-9412-1
Sdg Number: 220-9412

Client Sample ID: **S-1**

Lab Sample ID: 220-9412-3
Client Matrix: Solid
% Moisture: 56.4
Date Sampled: 06/19/2009 1045
Date Received: 06/20/2009 0748

8081A Organochlorine Pesticides (GC)

Method: 8081A
Preparation: 3550B
Dilution: 5.0
Date Analyzed: 06/23/2009 2024
Date Prepared: 06/20/2009 1207

Analysis Batch: 220-28430
Prep Batch: 220-28296

Instrument ID: HP 5890 with dual ECD
Lab File ID: C7733056.D
Initial Weight/Volume: 30.04 g
Final Weight/Volume: 10 mL
Injection Volume: 1.0 uL
Column ID: SECONDARY

Surrogate	%Rec		Acceptance Limits
DCB Decachlorobiphenyl	280	*	25 - 159
DCB Decachlorobiphenyl	473	*	25 - 159
Tetrachloro-m-xylene	135		24 - 154
Tetrachloro-m-xylene	613	*	24 - 154

Client: STV Incorporated

Job Number: 220-9412-1
Sdg Number: 220-9412

Client Sample ID: **S-2**

Lab Sample ID: 220-9412-4
Client Matrix: Solid

Date Sampled: 06/19/2009 1115
Date Received: 06/20/2009 0748

8081A Organochlorine Pesticides (GC)-TCLP

Method: 8081A
Preparation: 3510C
Dilution: 1.0
Date Analyzed: 06/25/2009 0208
Date Prepared: 06/23/2009 1238
Date Leached: 06/22/2009 1600

Analysis Batch: 220-28488
Prep Batch: 220-28387
Leachate Batch: 220-28369

Instrument ID: HP 6890 dual ECD
Lab File ID: C8418026.D
Initial Weight/Volume: 200 mL
Final Weight/Volume: 10 mL
Injection Volume: 1.0 uL
Column ID: PRIMARY

Analyte	DryWt Corrected: N	Result (mg/L)	Qualifier	MDL	RL
Chlordane (technical)		0.0025	U	0.00021	0.0025
Endrin		0.00050	U	0.000068	0.00050
Heptachlor		0.000042	J	0.000030	0.00025
Heptachlor epoxide		0.00025	U	0.000028	0.00025
gamma-BHC (Lindane)		0.00025	U	0.000028	0.00025
Methoxychlor		0.0025	U *	0.00041	0.0025
Toxaphene		0.012	U	0.00020	0.012

Surrogate	%Rec	Acceptance Limits
DCB Decachlorobiphenyl	60	29 - 156
Tetrachloro-m-xylene	88	53 - 144

Method: 8081A
Preparation: 3510C
Dilution: 1.0
Date Analyzed: 06/25/2009 0208
Date Prepared: 06/23/2009 1238
Date Leached: 06/22/2009 1600

Analysis Batch: 220-28488
Prep Batch: 220-28387
Leachate Batch: 220-28369

Instrument ID: HP 6890 dual ECD
Lab File ID: D8418026.D
Initial Weight/Volume: 200 mL
Final Weight/Volume: 10 mL
Injection Volume: 1.0 uL
Column ID: SECONDARY

Surrogate	%Rec	Acceptance Limits
DCB Decachlorobiphenyl	59	29 - 156
Tetrachloro-m-xylene	82	53 - 144

Client: STV Incorporated

Job Number: 220-9412-1
Sdg Number: 220-9412

Client Sample ID: **S-2**

Lab Sample ID: 220-9412-4
Client Matrix: Solid % Moisture: 53.7

Date Sampled: 06/19/2009 1115
Date Received: 06/20/2009 0748

8081A Organochlorine Pesticides (GC)

Method: 8081A
Preparation: 3550B
Dilution: 2.0
Date Analyzed: 06/23/2009 2004
Date Prepared: 06/20/2009 1207

Analysis Batch: 220-28430
Prep Batch: 220-28296

Instrument ID: HP 5890 with dual ECD
Lab File ID: C7733055.D
Initial Weight/Volume: 30.29 g
Final Weight/Volume: 10 mL
Injection Volume: 1.0 uL
Column ID: PRIMARY

Analyte	DryWt Corrected: Y Result (ug/Kg)	Qualifier	MDL	RL
4,4'-DDD	120		2.5	14
4,4'-DDE	66		2.9	14
4,4'-DDT	260	*	3.5	14
Aldrin	7.3	U	0.77	7.3
alpha-BHC	3.0	J	1.0	7.3
beta-BHC	8.3		1.6	7.3
delta-BHC	7.3	U	1.6	7.3
Dieldrin	74		2.4	14
Endosulfan I	7.3	U	1.2	7.3
Endosulfan II	14	U	2.7	14
Endosulfan sulfate	14	U	2.5	14
Endrin	200		2.6	14
Endrin ketone	43		2.6	14
gamma-BHC (Lindane)	7.3	U	1.2	7.3
Heptachlor	26		1.4	7.3
Heptachlor epoxide	11		1.3	7.3
Methoxychlor	61	J *	16	73
Toxaphene	360	U	39	360
alpha-Chlordane	31		1.2	7.3
gamma-Chlordane	32		2.3	7.3

Surrogate	%Rec	Acceptance Limits
DCB Decachlorobiphenyl	107	25 - 159
Tetrachloro-m-xylene	26	24 - 154

Method: 8081A
Preparation: 3550B
Dilution: 2.0
Date Analyzed: 06/23/2009 2004
Date Prepared: 06/20/2009 1207

Analysis Batch: 220-28430
Prep Batch: 220-28296

Instrument ID: HP 5890 with dual ECD
Lab File ID: D7733055.D
Initial Weight/Volume: 30.29 g
Final Weight/Volume: 10 mL
Injection Volume: 1.0 uL
Column ID: SECONDARY

Surrogate	%Rec		Acceptance Limits
DCB Decachlorobiphenyl	82		25 - 159
Tetrachloro-m-xylene	23	*	24 - 154

Client: STV Incorporated

Job Number: 220-9412-1
Sdg Number: 220-9412

Client Sample ID: **S-2**

Lab Sample ID: 220-9412-4
Client Matrix: Solid
% Moisture: 53.7
Date Sampled: 06/19/2009 1115
Date Received: 06/20/2009 0748

8081A Organochlorine Pesticides (GC)

Method: 8081A
Preparation: 3550B
Dilution: 2.0
Date Analyzed: 06/23/2009 2044
Date Prepared: 06/20/2009 1207
Analysis Batch: 220-28430
Prep Batch: 220-28296
Instrument ID: HP 5890 with dual ECD
Lab File ID: D7733057.D
Initial Weight/Volume: 30.29 g
Final Weight/Volume: 10 mL
Injection Volume: 1.0 uL
Column ID: PRIMARY

Analyte	DryWt Corrected: Y	Result (ug/Kg)	Qualifier	MDL	RL
Endrin aldehyde		46		1.7	14

Client: STV Incorporated

Job Number: 220-9412-1
Sdg Number: 220-9412

Client Sample ID: **S-2**

Lab Sample ID:	220-9412-4			Date Sampled:	06/19/2009 1115
Client Matrix:	Solid	% Moisture:	53.7	Date Received:	06/20/2009 0748

8081A Organochlorine Pesticides (GC)

Method:	8081A	Analysis Batch: 220-28430		Instrument ID:	HP 5890 with dual ECD
Preparation:	3550B	Prep Batch: 220-28296		Lab File ID:	C7733057.D
Dilution:	2.0			Initial Weight/Volume:	30.29 g
Date Analyzed:	06/23/2009 2044			Final Weight/Volume:	10 mL
Date Prepared:	06/20/2009 1207			Injection Volume:	1.0 uL
				Column ID:	SECONDARY

Surrogate	%Rec		Acceptance Limits
DCB Decachlorobiphenyl	101		25 - 159
DCB Decachlorobiphenyl	162	*	25 - 159
Tetrachloro-m-xylene	20	*	24 - 154
Tetrachloro-m-xylene	191	*	24 - 154

Client: STV Incorporated

Job Number: 220-9412-1
Sdg Number: 220-9412

Client Sample ID: **W-TANK**

Lab Sample ID: 220-9412-1
Client Matrix: Water

Date Sampled: 06/19/2009 1030
Date Received: 06/20/2009 0748

8082 Polychlorinated Biphenyls (PCBs) by Gas Chromatography

Method: 8082
Preparation: 3510C
Dilution: 1.0
Date Analyzed: 06/22/2009 1027
Date Prepared: 06/20/2009 1308

Analysis Batch: 220-28368
Prep Batch: 220-28303

Instrument ID: HP 6890 dual ECD
Lab File ID: C9043990.D
Initial Weight/Volume: 1000 mL
Final Weight/Volume: 10 mL
Injection Volume: 1.0 uL
Column ID: PRIMARY

Analyte	Result (ug/L)	Qualifier	MDL	RL
PCB-1016	0.50	U	0.050	0.50
PCB-1221	0.50	U	0.050	0.50
PCB-1232	0.50	U	0.050	0.50
PCB-1242	1.6		0.050	0.50
PCB-1248	0.50	U	0.050	0.50
PCB-1254	2.3		0.082	0.50
PCB-1260	2.2		0.082	0.50

Surrogate	%Rec		Acceptance Limits
Tetrachloro-m-xylene	29		22 - 145
DCB Decachlorobiphenyl	26	*	29 - 135

Method: 8082
Preparation: 3510C
Dilution: 1.0
Date Analyzed: 06/22/2009 1027
Date Prepared: 06/20/2009 1308

Analysis Batch: 220-28368
Prep Batch: 220-28303

Instrument ID: HP 6890 dual ECD
Lab File ID: D9043990.D
Initial Weight/Volume: 1000 mL
Final Weight/Volume: 10 mL
Injection Volume: 1.0 uL
Column ID: SECONDARY

Surrogate	%Rec		Acceptance Limits
Tetrachloro-m-xylene	28		22 - 145
DCB Decachlorobiphenyl	24	*	29 - 135

Client: STV Incorporated

Job Number: 220-9412-1
Sdg Number: 220-9412

Client Sample ID: **W-EXC**

Lab Sample ID: 220-9412-2
Client Matrix: Water

Date Sampled: 06/19/2009 1000
Date Received: 06/20/2009 0748

8082 Polychlorinated Biphenyls (PCBs) by Gas Chromatography

Method: 8082
Preparation: 3510C
Dilution: 1.0
Date Analyzed: 06/22/2009 1046
Date Prepared: 06/20/2009 1308

Analysis Batch: 220-28368
Prep Batch: 220-28303

Instrument ID: HP 6890 dual ECD
Lab File ID: D9043991.D
Initial Weight/Volume: 1000 mL
Final Weight/Volume: 10 mL
Injection Volume: 1.0 uL
Column ID: PRIMARY

Analyte	Result (ug/L)	Qualifier	MDL	RL
PCB-1016	0.50	U	0.050	0.50
PCB-1221	0.50	U	0.050	0.50
PCB-1232	0.50	U	0.050	0.50
PCB-1242	0.50	U	0.050	0.50
PCB-1248	0.50	U	0.050	0.50
PCB-1254	0.50	U	0.082	0.50
PCB-1260	0.50	U	0.082	0.50

Surrogate	%Rec		Acceptance Limits
Tetrachloro-m-xylene	65		22 - 145
DCB Decachlorobiphenyl	27	*	29 - 135

Client: STV Incorporated

Job Number: 220-9412-1
Sdg Number: 220-9412

Client Sample ID: S-1

Lab Sample ID: 220-9412-3
Client Matrix: Solid

% Moisture: 56.4

Date Sampled: 06/19/2009 1045
Date Received: 06/20/2009 0748

8082 Polychlorinated Biphenyls (PCBs) by Gas Chromatography

Method: 8082
Preparation: 3550B
Dilution: 2.0
Date Analyzed: 06/23/2009 1241
Date Prepared: 06/22/2009 1349

Analysis Batch: 220-28393
Prep Batch: 220-28341

Instrument ID: HP 6890 dual ECD
Lab File ID: C90431051.D
Initial Weight/Volume: 30.40 g
Final Weight/Volume: 10 mL
Injection Volume: 1.0 uL
Column ID: PRIMARY

Analyte	DryWt Corrected: Y	Result (ug/Kg)	Qualifier	MDL	RL
PCB-1016		77	U	6.0	77
PCB-1221		77	U	6.0	77
PCB-1232		77	U	6.0	77
PCB-1242		590		6.0	77
PCB-1248		77	U	6.0	77
PCB-1254		520		6.5	77
PCB-1260		760		6.5	77

Surrogate	%Rec	Acceptance Limits
Tetrachloro-m-xylene	24	24 - 150
DCB Decachlorobiphenyl	84	24 - 150

Method: 8082
Preparation: 3550B
Dilution: 2.0
Date Analyzed: 06/23/2009 1241
Date Prepared: 06/22/2009 1349

Analysis Batch: 220-28393
Prep Batch: 220-28341

Instrument ID: HP 6890 dual ECD
Lab File ID: D90431051.D
Initial Weight/Volume: 30.40 g
Final Weight/Volume: 10 mL
Injection Volume: 1.0 uL
Column ID: SECONDARY

Surrogate	%Rec	Acceptance Limits
Tetrachloro-m-xylene	23	24 - 150
DCB Decachlorobiphenyl	77	24 - 150

Client: STV Incorporated

Job Number: 220-9412-1
Sdg Number: 220-9412

Client Sample ID: **S-2**

Lab Sample ID: 220-9412-4
Client Matrix: Solid % Moisture: 53.7

Date Sampled: 06/19/2009 1115
Date Received: 06/20/2009 0748

8082 Polychlorinated Biphenyls (PCBs) by Gas Chromatography

Method: 8082
Preparation: 3550B
Dilution: 5.0
Date Analyzed: 06/23/2009 1222
Date Prepared: 06/22/2009 1349

Analysis Batch: 220-28393
Prep Batch: 220-28341

Instrument ID: HP 6890 dual ECD
Lab File ID: C90431050.D
Initial Weight/Volume: 30.20 g
Final Weight/Volume: 10 mL
Injection Volume: 1.0 uL
Column ID: PRIMARY

Analyte	DryWt Corrected: Y	Result (ug/Kg)	Qualifier	MDL	RL
PCB-1016		180	U	14	180
PCB-1221		180	U	14	180
PCB-1232		180	U	14	180
PCB-1242		720		14	180
PCB-1248		180	U	14	180
PCB-1254		1100		15	180
PCB-1260		890		15	180

Surrogate	%Rec		Acceptance Limits
Tetrachloro-m-xylene	90		24 - 150
DCB Decachlorobiphenyl	190	*	24 - 150

Method: 8082
Preparation: 3550B
Dilution: 5.0
Date Analyzed: 06/23/2009 1222
Date Prepared: 06/22/2009 1349

Analysis Batch: 220-28393
Prep Batch: 220-28341

Instrument ID: HP 6890 dual ECD
Lab File ID: C90431050.D
Initial Weight/Volume: 30.20 g
Final Weight/Volume: 10 mL
Injection Volume: 1.0 uL
Column ID: SECONDARY

Surrogate	%Rec		Acceptance Limits
Tetrachloro-m-xylene	85		24 - 150
DCB Decachlorobiphenyl	188	*	24 - 150

Client: STV Incorporated

Job Number: 220-9412-1
Sdg Number: 220-9412

Client Sample ID: **S-1**

Lab Sample ID: 220-9412-3
Client Matrix: Solid

Date Sampled: 06/19/2009 1045
Date Received: 06/20/2009 0748

8151A Herbicides (GC)-TCLP

Method: 8151A
Preparation: 8151A
Dilution: 1.0
Date Analyzed: 06/26/2009 1622
Date Prepared: 06/24/2009 1009
Date Leached: 06/23/2009 1520

Analysis Batch: 680-141545
Prep Batch: 680-141206
Leachate Batch: 680-141157

Instrument ID: GC SemiVolatiles - S
Lab File ID: sf26008.d
Initial Weight/Volume: 10 mL
Final Weight/Volume: 10 mL
Injection Volume: 1 uL
Column ID: PRIMARY

Analyte	DryWt Corrected: N	Result (mg/L)	Qualifier	MDL	RL
2,4-D		0.050	U	0.050	0.050
Silvex (2,4,5-TP)		0.050	U	0.050	0.050

Surrogate	%Rec	Acceptance Limits
DCAA	104	50 - 150

Client: STV Incorporated

Job Number: 220-9412-1
Sdg Number: 220-9412

Client Sample ID: **S-1**

Lab Sample ID: 220-9412-3
Client Matrix: Solid

% Moisture: 56.4

Date Sampled: 06/19/2009 1045
Date Received: 06/20/2009 0748

8151A Herbicides (GC)

Method: 8151A
Preparation: 8151A
Dilution: 20
Date Analyzed: 06/26/2009 2121
Date Prepared: 06/23/2009 1302

Analysis Batch: 680-141545
Prep Batch: 680-141123

Instrument ID: GC SemiVolatiles - S
Lab File ID: sf26024.d
Initial Weight/Volume: 30.2 g
Final Weight/Volume: 10 mL
Injection Volume: 1 uL
Column ID: PRIMARY

Analyte	DryWt Corrected: Y	Result (ug/Kg)	Qualifier	MDL	RL
2,4-D		380	U	230	380
2,4-DB		380	U	140	380
2,4,5-T		380	U	100	380
Silvex (2,4,5-TP)		380	U	73	380
Dalapon		15000	U	130	15000
Dicamba		380	U	86	380
Dichlorprop		380	U	50	380
Dinoseb		4600	U	210	4600
MCPA		91000	U *	8600	91000
Mecoprop		91000	U	7700	91000
Pentachlorophenol		380	U	19	380

Surrogate	%Rec		Acceptance Limits
DCAA	0	D	58 - 110

Client: STV Incorporated

Job Number: 220-9412-1
Sdg Number: 220-9412

Client Sample ID: **S-2**

Lab Sample ID: 220-9412-4
Client Matrix: Solid

Date Sampled: 06/19/2009 1115
Date Received: 06/20/2009 0748

8151A Herbicides (GC)-TCLP

Method: 8151A
Preparation: 8151A
Dilution: 1.0
Date Analyzed: 06/26/2009 1641
Date Prepared: 06/24/2009 1009
Date Leached: 06/23/2009 1520

Analysis Batch: 680-141545
Prep Batch: 680-141206
Leachate Batch: 680-141157

Instrument ID: GC SemiVolatiles - S
Lab File ID: sf26009.d
Initial Weight/Volume: 10 mL
Final Weight/Volume: 10 mL
Injection Volume: 1 uL
Column ID: PRIMARY

Analyte	DryWt Corrected: N	Result (mg/L)	Qualifier	MDL	RL
2,4-D		0.050	U	0.050	0.050
Silvex (2,4,5-TP)		0.050	U	0.050	0.050

Surrogate	%Rec	Acceptance Limits
DCAA	96	50 - 150

Client: STV Incorporated

Job Number: 220-9412-1
Sdg Number: 220-9412

Client Sample ID: **S-2**

Lab Sample ID: 220-9412-4
Client Matrix: Solid

% Moisture: 53.7

Date Sampled: 06/19/2009 1115
Date Received: 06/20/2009 0748

8151A Herbicides (GC)

Method: 8151A
Preparation: 8151A
Dilution: 1.0
Date Analyzed: 06/26/2009 1834
Date Prepared: 06/23/2009 1302

Analysis Batch: 680-141545
Prep Batch: 680-141123

Instrument ID: GC SemiVolatiles - S
Lab File ID: sf26015.d
Initial Weight/Volume: 30.2 g
Final Weight/Volume: 10 mL
Injection Volume: 1 uL
Column ID: PRIMARY

Analyte	DryWt Corrected: Y	Result (ug/Kg)	Qualifier	MDL	RL
2,4-D		18	U	11	18
2,4-DB		18	U	6.4	18
2,4,5-T		18	U	4.9	18
Silvex (2,4,5-TP)		18	U	3.4	18
Dalapon		710	U	6.2	710
Dicamba		18	U	4.1	18
Dichlorprop		18	U	2.4	18
Dinoseb		210	U	9.9	210
MCPA		4300	U *	410	4300
Mecoprop		4300	U	360	4300
Pentachlorophenol		18	U	0.90	18

Surrogate	%Rec		Acceptance Limits
DCAA	1240	E *	58 - 110

Client: STV Incorporated

Job Number: 220-9412-1
Sdg Number: 220-9412

Client Sample ID: **W-TANK**

Lab Sample ID: 220-9412-1
Client Matrix: Water

Date Sampled: 06/19/2009 1030
Date Received: 06/20/2009 0748

6020 Metals (ICP/MS)

Method: 6020
Preparation: 3010A
Dilution: 5.0
Date Analyzed: 06/24/2009 1248
Date Prepared: 06/23/2009 1156

Analysis Batch: 220-28480
Prep Batch: 220-28380

Instrument ID: Agilent ICPMS
Lab File ID: N/A
Initial Weight/Volume: 100 mL
Final Weight/Volume: 500 mL

Analyte	Result (ug/L)	Qualifier	MDL	RL
Silver	12.5	U	2.5	12.5
Arsenic	25.8		2.5	12.5
Beryllium	12.5	U	2.5	12.5
Cadmium	13.1		2.5	12.5
Chromium	101		5.0	25.0
Copper	290		2.5	25.0
Nickel	126		2.5	12.5
Lead	280		2.5	12.5
Antimony	16.2	J	5.0	20.0
Selenium	25.0	U	5.0	25.0
Thallium	17.5	U	5.0	17.5
Zinc	506		12.5	125

7470A Mercury (CVAA)

Method: 7470A
Preparation: 7470A
Dilution: 1.0
Date Analyzed: 06/23/2009 1451
Date Prepared: 06/23/2009 1121

Analysis Batch: 220-28406
Prep Batch: 220-28377

Instrument ID: Perkin Elmer FIMS
Lab File ID: N/A
Initial Weight/Volume: 25 mL
Final Weight/Volume: 50 mL

Analyte	Result (ug/L)	Qualifier	MDL	RL
Mercury	0.44		0.060	0.20

Client: STV Incorporated

Job Number: 220-9412-1
Sdg Number: 220-9412

Client Sample ID: **W-EXC**

Lab Sample ID: 220-9412-2
Client Matrix: Water

Date Sampled: 06/19/2009 1000
Date Received: 06/20/2009 0748

6020 Metals (ICP/MS)

Method: 6020
Preparation: 3010A
Dilution: 5.0
Date Analyzed: 06/24/2009 1252
Date Prepared: 06/23/2009 1156

Analysis Batch: 220-28480
Prep Batch: 220-28380

Instrument ID: Agilent ICPMS
Lab File ID: N/A
Initial Weight/Volume: 100 mL
Final Weight/Volume: 500 mL

Analyte	Result (ug/L)	Qualifier	MDL	RL
Silver	12.5	U	2.5	12.5
Arsenic	7.3	J	2.5	12.5
Beryllium	12.5	U	2.5	12.5
Cadmium	12.5	U	2.5	12.5
Chromium	18.4	J	5.0	25.0
Copper	54.8		2.5	25.0
Nickel	30.0		2.5	12.5
Lead	47.0		2.5	12.5
Antimony	20.0	U	5.0	20.0
Selenium	25.0	U	5.0	25.0
Thallium	17.5	U	5.0	17.5
Zinc	103	J	12.5	125

7470A Mercury (CVAA)

Method: 7470A
Preparation: 7470A
Dilution: 1.0
Date Analyzed: 06/23/2009 1452
Date Prepared: 06/23/2009 1121

Analysis Batch: 220-28406
Prep Batch: 220-28377

Instrument ID: Perkin Elmer FIMS
Lab File ID: N/A
Initial Weight/Volume: 25 mL
Final Weight/Volume: 50 mL

Analyte	Result (ug/L)	Qualifier	MDL	RL
Mercury	0.20	U	0.060	0.20

Client: STV Incorporated

Job Number: 220-9412-1
Sdg Number: 220-9412

Client Sample ID: **S-1**

Lab Sample ID: 220-9412-3
Client Matrix: Solid

Date Sampled: 06/19/2009 1045
Date Received: 06/20/2009 0748

6010B Metals (ICP)-TCLP

Method:	6010B	Analysis Batch: 220-28513		Instrument ID:	Perkin Elmer ICP
Preparation:	3010A	Prep Batch: 220-28372		Lab File ID:	N/A
Dilution:	1.0	Leachate Batch: 220-28369		Initial Weight/Volume:	20 mL
Date Analyzed:	06/25/2009 1438			Final Weight/Volume:	50 mL
Date Prepared:	06/23/2009 1038				
Date Leached:	06/22/2009 1600				

Analyte	DryWt Corrected: N	Result (mg/L)	Qualifier	MDL	RL
Arsenic		0.064	J	0.020	0.075
Barium		0.33		0.0012	0.025
Cadmium		0.025	U	0.0050	0.025
Chromium		0.023	J	0.0025	0.025
Lead		0.075	U	0.012	0.075
Selenium		0.19	U	0.062	0.19
Silver		0.025	U	0.0012	0.025

6020 Metals (ICP/MS)

Method:	6020	Analysis Batch: 220-28480		Instrument ID:	Agilent ICPMS
Preparation:	3050B	Prep Batch: 220-28339		Lab File ID:	N/A
Dilution:	1.0			Initial Weight/Volume:	1.15 g
Date Analyzed:	06/24/2009 1331			Final Weight/Volume:	1000 mL
Date Prepared:	06/22/2009 1337				

Analyte	DryWt Corrected: Y	Result (mg/Kg)	Qualifier	MDL	RL
Silver		11.2		0.20	1.0
Arsenic		45.6		0.20	1.0
Beryllium		0.70	J	0.30	1.0
Cadmium		51.6		0.20	1.0
Chromium		342		0.40	2.0
Copper		974		0.20	2.0
Nickel		392		0.20	1.0
Lead		607		0.20	1.0
Antimony		8.5		0.40	1.6
Selenium		8.8		0.60	2.0
Thallium		0.56	J	0.40	1.4
Zinc		1350		1.0	10

Client: STV Incorporated

Job Number: 220-9412-1
Sdg Number: 220-9412

Client Sample ID: S-1

Lab Sample ID: 220-9412-3
Client Matrix: Solid

Date Sampled: 06/19/2009 1045
Date Received: 06/20/2009 0748

7470A Mercury (CVAA)-TCLP

Method: 7470A
Preparation: 7470A
Dilution: 1.0
Date Analyzed: 06/23/2009 1515
Date Prepared: 06/23/2009 1121
Date Leached: 06/22/2009 1600

Analysis Batch: 220-28406
Prep Batch: 220-28377
Leachate Batch: 220-28369

Instrument ID: Perkin Elmer FIMS
Lab File ID: N/A
Initial Weight/Volume: 5 mL
Final Weight/Volume: 50 mL

Analyte	DryWt Corrected: N	Result (mg/L)	Qualifier	MDL	RL
Mercury		0.0020	U	0.0010	0.0020

7471A Mercury (CVAA)

Method: 7471A
Preparation: 7471A
Dilution: 5.0
Date Analyzed: 06/24/2009 1546
Date Prepared: 06/23/2009 1058

Analysis Batch: 220-28474
Prep Batch: 220-28373

Instrument ID: Perkin Elmer FIMS
Lab File ID: N/A
Initial Weight/Volume: 0.62 g
Final Weight/Volume: 50 mL

Analyte	DryWt Corrected: Y	Result (mg/Kg)	Qualifier	MDL	RL
Mercury		2.4		0.044	0.55

Client: STV Incorporated

Job Number: 220-9412-1
Sdg Number: 220-9412

Client Sample ID: **S-2**

Lab Sample ID: 220-9412-4
Client Matrix: Solid

Date Sampled: 06/19/2009 1115
Date Received: 06/20/2009 0748

6010B Metals (ICP)-TCLP

Method:	6010B	Analysis Batch: 220-28513		Instrument ID:	Perkin Elmer ICP
Preparation:	3010A	Prep Batch: 220-28372		Lab File ID:	N/A
Dilution:	1.0	Leachate Batch: 220-28369		Initial Weight/Volume:	20 mL
Date Analyzed:	06/25/2009 1441			Final Weight/Volume:	50 mL
Date Prepared:	06/23/2009 1038				
Date Leached:	06/22/2009 1600				

Analyte	DryWt Corrected: N	Result (mg/L)	Qualifier	MDL	RL
Arsenic		0.075	U	0.020	0.075
Barium		0.34		0.0012	0.025
Cadmium		0.025	U	0.0050	0.025
Chromium		0.038		0.0025	0.025
Lead		0.075	U	0.012	0.075
Selenium		0.19	U	0.062	0.19
Silver		0.025	U	0.0012	0.025

6020 Metals (ICP/MS)

Method:	6020	Analysis Batch: 220-28480		Instrument ID:	Agilent ICPMS
Preparation:	3050B	Prep Batch: 220-28339		Lab File ID:	N/A
Dilution:	1.0			Initial Weight/Volume:	1.45 g
Date Analyzed:	06/24/2009 1348			Final Weight/Volume:	1000 mL
Date Prepared:	06/22/2009 1337				

Analyte	DryWt Corrected: Y	Result (mg/Kg)	Qualifier	MDL	RL
Silver		19.5		0.15	0.74
Arsenic		34.0		0.15	0.74
Beryllium		0.80		0.22	0.74
Cadmium		104		0.15	0.74
Chromium		530		0.30	1.5
Copper		1450		0.15	1.5
Nickel		337		0.15	0.74
Lead		1370		0.15	0.74
Antimony		7.3		0.30	1.2
Selenium		5.0		0.45	1.5
Thallium		0.31	J	0.30	1.0
Zinc		2240		0.74	7.4

Client: STV Incorporated

Job Number: 220-9412-1
Sdg Number: 220-9412

Client Sample ID: **S-2**

Lab Sample ID: 220-9412-4
Client Matrix: Solid

Date Sampled: 06/19/2009 1115
Date Received: 06/20/2009 0748

7470A Mercury (CVAA)-TCLP

Method:	7470A	Analysis Batch: 220-28406		Instrument ID:	Perkin Elmer FIMS
Preparation:	7470A	Prep Batch: 220-28377		Lab File ID:	N/A
Dilution:	1.0	Leachate Batch: 220-28369		Initial Weight/Volume:	5 mL
Date Analyzed:	06/23/2009 1516			Final Weight/Volume:	50 mL
Date Prepared:	06/23/2009 1121				
Date Leached:	06/22/2009 1600				

Analyte	DryWt Corrected: N	Result (mg/L)	Qualifier	MDL	RL
Mercury		0.0020	U	0.0010	0.0020

7471A Mercury (CVAA)

Method:	7471A	Analysis Batch: 220-28474		Instrument ID:	Perkin Elmer FIMS
Preparation:	7471A	Prep Batch: 220-28373		Lab File ID:	N/A
Dilution:	5.0			Initial Weight/Volume:	0.60 g
Date Analyzed:	06/24/2009 1547			Final Weight/Volume:	50 mL
Date Prepared:	06/23/2009 1058				

Analyte	DryWt Corrected: Y	Result (mg/Kg)	Qualifier	MDL	RL
Mercury		2.6		0.043	0.54

General Chemistry

Client Sample ID: **S-1**

Lab Sample ID: 220-9412-3
Client Matrix: Solid

% Moisture: 56.4

Date Sampled: 06/19/2009 1045
Date Received: 06/20/2009 0748

Analyte	Result	Qual	Units	MDL	RL	Dil	Method
Chromium, hexavalent	2.2	U	mg/Kg	0.24	2.2	1.0	7196A
	Anly Batch: 680-141487	Date Analyzed		06/26/2009 1319		DryWt Corrected: Y	
	Prep Batch: 680-141389	Date Prepared:		06/25/2009 1528			

Analyte	Result	Qual	Units	RL	RL	Dil	Method
Ignitability	neg		mm/sec	2.2	2.2	1.0	1030
	Anly Batch: 220-28346	Date Analyzed		06/22/2009 1446		DryWt Corrected: N	
Temperature	1890		Fahrenheit	1.00	1.00	1.0	1030
	Anly Batch: 220-28346	Date Analyzed		06/22/2009 1446		DryWt Corrected: N	
Cyanide, Reactive	0.50	U	mg/Kg	0.50	0.50	1.0	9012
	Anly Batch: 220-28401	Date Analyzed		06/23/2009 1344		DryWt Corrected: N	
	Prep Batch: 220-28376	Date Prepared:		06/22/2009 1425			
Sulfide, Reactive	372		mg/Kg	20.0	20.0	1.0	9034
	Anly Batch: 220-28438	Date Analyzed		06/24/2009 1042		DryWt Corrected: N	
	Prep Batch: 220-28436	Date Prepared:		06/22/2009 1505			
pH	8.52	HF	SU	0.100	0.100	1.0	9045C
	Anly Batch: 220-28443	Date Analyzed		06/24/2009 1213		DryWt Corrected: N	
Percent Moisture	56.4		%	0.10	0.10	1.0	Moisture
	Anly Batch: 220-28326	Date Analyzed		06/22/2009 1138			
Percent Solids	43.6		%	0.10	0.10	1.0	Moisture
	Anly Batch: 220-28326	Date Analyzed		06/22/2009 1138			

General Chemistry

Client Sample ID: S-2

Lab Sample ID: 220-9412-4
Client Matrix: Solid

% Moisture: 53.7

Date Sampled: 06/19/2009 1115
Date Received: 06/20/2009 0748

Analyte	Result	Qual	Units	MDL	RL	Dil	Method
Chromium, hexavalent	2.1	U	mg/Kg	0.23	2.1	1.0	7196A
	Anly Batch: 680-141487	Date Analyzed		06/26/2009 1319		DryWt Corrected: Y	
	Prep Batch: 680-141389	Date Prepared:		06/25/2009 1528			

Analyte	Result	Qual	Units	RL	RL	Dil	Method
Ignitability	neg		mm/sec	2.2	2.2	1.0	1030
	Anly Batch: 220-28346	Date Analyzed		06/22/2009 1448		DryWt Corrected: N	
Temperature	1890		Fahrenheit	1.00	1.00	1.0	1030
	Anly Batch: 220-28346	Date Analyzed		06/22/2009 1448		DryWt Corrected: N	
Cyanide, Reactive	0.50	U	mg/Kg	0.50	0.50	1.0	9012
	Anly Batch: 220-28401	Date Analyzed		06/23/2009 1345		DryWt Corrected: N	
	Prep Batch: 220-28376	Date Prepared:		06/22/2009 1425			
Sulfide, Reactive	644		mg/Kg	19.9	19.9	1.0	9034
	Anly Batch: 220-28438	Date Analyzed		06/24/2009 1051		DryWt Corrected: N	
	Prep Batch: 220-28436	Date Prepared:		06/22/2009 1505			
pH	8.34	HF	SU	0.100	0.100	1.0	9045C
	Anly Batch: 220-28443	Date Analyzed		06/24/2009 1219		DryWt Corrected: N	
Percent Moisture	53.7		%	0.10	0.10	1.0	Moisture
	Anly Batch: 220-28326	Date Analyzed		06/22/2009 1138			
Percent Solids	46.3		%	0.10	0.10	1.0	Moisture
	Anly Batch: 220-28326	Date Analyzed		06/22/2009 1138			

DATA REPORTING QUALIFIERS

Client: STV Incorporated

Job Number: 220-9412-1
Sdg Number: 220-9412

Lab Section	Qualifier	Description
GC/MS VOA		
	U	Analyzed for but not detected.
	J	Indicates an estimated value.
	*	LCS or LCSD exceeds the control limits
	*	Surrogate exceeds the control limit
	B	The analyte was found in an associated blank, as well as in the sample.
GC/MS Semi VOA		
	U	Analyzed for but not detected.
	J	Indicates an estimated value.
	*	LCS or LCSD exceeds the control limits
GC VOA		
	U	Analyzed for but not detected.
	J	Indicates an estimated value.
GC Semi VOA		
	U	Analyzed for but not detected.
	E	Compound concentration exceeds the upper level of the calibration range of the instrument for that specific analysis.
	*	Duplicate RPD exceeds control limits
	J	Indicates an estimated value.
	*	LCS or LCSD exceeds the control limits
	*	MS or MSD exceeds the control limits
	*	Surrogate exceeds the control limit
	D	The reported value is from a dilution.

DATA REPORTING QUALIFIERS

Client: STV Incorporated

Job Number: 220-9412-1
Sdg Number: 220-9412

Lab Section	Qualifier	Description
Metals		
	U	Indicates analyzed for but not detected.
	4	MS, MSD: The analyte present in the original sample is 4 times greater than the matrix spike concentration; therefore, control limits are not applicable.
	J	Sample result is greater than the MDL but below the CRDL
	N	Spiked sample recovery is not within control limits.
General Chemistry		
	HF	Field parameter with a holding time of 15 minutes
	U	Indicates analyzed for but not detected.

Chain of Custody Record

SEVERN TRENT **STL**
Severn Trent Laboratories, Inc.

9412

STL-4124 (0901)

Client	Project Manager	Date	Chain of Custody Number
STV Inc	Mike Tumalty	6/19/09	351398
Address	**Telephone Number (Area Code)/Fax Number**	**Lab Number**	Page 1 of 1
225 Park Ave South	(212) 614-3369	per BC 6/22 JMD	

City	State	Zip Code	Site Contact	Lab Contact
New York	NY	10003	Brian Connolly	Jill

Project Name and Location (State): Borden Ave Bridge, New York

Carrier/Waybill Number:

Contract/Purchase Order/Quote No.:

Analysis (Attach list if more space is needed)

Sample I.D. No. and Description (Containers for each sample may be combined on one line)	Date	Time	Matrix: Air	Aqueous	Sed.	Soil	Containers & Preservatives: Unpres.	H2SO4	HNO3	HCl	NaOH	ZnAc/NaOH	TCL VOCs	TCL SVOCs	PCBs/Pest	Pest/Herb.	PPL METALS	CR (VI)	TCLP	TPHC = DRO/GRO Fingerprint	Fingerprint TPHC	DRO/GRO	RCRA char	Per B.C.	Special Instructions/ Conditions of Receipt
	6/19/09																								6/22/09 - JMD
1) W-Tank		1030											x	x	x		x			x					All Containers in 7.8°C cooler
2) W-Exc		1000											x	x	x		x			x					All Containers in 7.8°C cooler
3) S-1		1045											x	x	x	x	x	x	x	x	x	x	x		(KB) 6/20/09
4) S-2		1115											x	x	x	x	x	x	x	x	x	x	x		

Possible Hazard Identification: ☑ Non-Hazard ☐ Flammable ☐ Skin Irritant ☐ Poison B ☐ Unknown

Sample Disposal: ☐ Return To Client ☐ Disposal By Lab ☐ Archive For _____ Months (A fee may be assessed if samples are retained longer than 1 month)

Turn Around Time Required: ☑ 24 Hours ☐ 48 Hours ☐ 7 Days ☐ 14 Days ☐ 21 Days ☐ Other _____

QC Requirements (Specify): Samples collected by Richard Hart (516) 328-1194 if question

	Date	Time		Date	Time
1. Relinquished By: [signature]	6/19/09	3:05	1. Received By: [signature]	6/19/09	3:05
2. Relinquished By:			2. Received By: K Blocker	6/20/09	748
3. Relinquished By:			3. Received By:		

Comments: 0.6°C, 7.8°C gun #1 bags of melted ice.

PASSED RAD SCREEN

DISTRIBUTION: WHITE - Returned to Client with Report; CANARY - Stays with the Sample; PINK - Field Copy

ESTAMERICA CONNECTICUT
RESERVATIVE RECORD

Job Number:

Client:

Client Project:

Lab Number	Preservative	pH	Adjustment (mLs)	pH after Adjustment	Preservative Lot Number	Initials	Date
9412 - 01	HNO_3	<2	N/A	N/A	N/A	KB	6/20/09
02	↓	<2	↓	↓	↓	↓	↓
01	HCL	<2					
02	↓	<2					

TestAmerica - Connecticut
Internal Chain-of-Custody

220-9412
STV- Borden Ave Bridge

Trip Blank:

24 hr TAT

QC: Air:

FB:

Soil: 3-4 Water: 1-2

Date Received: 6/20/09

Sample #s: 1-4

Locations: 99D, R-11, A5, R-22

Laboratory Sample #	Signature-Sample Removal	Date	Time	Reason	Signature-Sample Return	Date	Time
1-4		6/20/09	1105	Ext.			
3-4		6/20/09	1105	Ext.		6/20/09	1710
3-4		6/20/09	1030	VOA TRIP		6/20/09	1700
3-4	MC	6/22	12:20	MTL		6/22/09	14:20
1,2		6/22	13:30	VOA			
3-4		6-22	13:20	EXT		6/22	15:10
3-4		6-22	1515	MTL		6-22	1600
3-4		6-23	1025	MTL		6-23	1300
1-2	MC	6/23	10:55	MTL	MC	6/23	13:00
1,2		6/24/09	10:40	pH		6/24/09	12:30

Page 69 of 71

06/29/2009

TestAmerica Form# SMF02300.CT

Login Sample Receipt Check List

Client: STV Incorporated

Job Number: 220-9412-1
SDG Number: 220-9412

Login Number: 9412
Creator: Blocker, Kristina
List Number: 1

List Source: TestAmerica Connecticut

Question	T / F/ NA	Comment
Radioactivity either was not measured or, if measured, is at or below background	True	
The cooler's custody seal, if present, is intact.	True	
The cooler or samples do not appear to have been compromised or tampered with.	True	
Samples were received on ice.	True	7.8C cooler bags of melted ice/water.
Cooler Temperature is acceptable.	False	
Cooler Temperature is recorded.	True	0.6C, 7.8C
COC is present.	True	
COC is filled out in ink and legible.	True	
COC is filled out with all pertinent information.	True	
There are no discrepancies between the sample IDs on the containers and the COC.	True	
Samples are received within Holding Time.	True	
Sample containers have legible labels.	True	
Containers are not broken or leaking.	True	
Sample collection date/times are provided.	True	
Appropriate sample containers are used.	True	
Sample bottles are completely filled.	True	
There is sufficient vol. for all requested analyses, incl. any requested MS/MSDs	True	
VOA sample vials do not have headspace or bubble is <6mm (1/4") in diameter.	True	
If necessary, staff have been informed of any short hold time or quick TAT needs	True	
Multiphasic samples are not present.	True	
Samples do not require splitting or compositing.	True	
Is the Field Sampler's name present on COC?	True	

Login Sample Receipt Check List

Client: STV Incorporated

Job Number: 220-9412-1
SDG Number: 220-9412

Login Number: 9412
Creator: Daughtry, Beth
List Number: 1

List Source: TestAmerica Savannah
List Creation: 06/23/09 10:36 AM

Question	T / F/ NA	Comment
Radioactivity either was not measured or, if measured, is at or below background	N/A	
The cooler's custody seal, if present, is intact.	True	
The cooler or samples do not appear to have been compromised or tampered with.	True	
Samples were received on ice.	True	
Cooler Temperature is acceptable.	True	
Cooler Temperature is recorded.	True	
COC is present.	True	
COC is filled out in ink and legible.	True	
COC is filled out with all pertinent information.	True	
There are no discrepancies between the sample IDs on the containers and the COC.	True	
Samples are received within Holding Time.	True	
Sample containers have legible labels.	True	
Containers are not broken or leaking.	True	
Sample collection date/times are provided.	True	
Appropriate sample containers are used.	True	
Sample bottles are completely filled.	True	
There is sufficient vol. for all requested analyses, incl. any requested MS/MSDs	True	
VOA sample vials do not have headspace or bubble is <6mm (1/4") in diameter.	True	
If necessary, staff have been informed of any short hold time or quick TAT needs	True	
Multiphasic samples are not present.	N/A	
Samples do not require splitting or compositing.	N/A	
Is the Field Sampler's name present on COC?	N/A	

New York State Department of Environmental Conservation
Division of Environmental Permits, Region 2
47-40 21st Street, Long Island City, NY 11101-5407
Phone: (718) 482-4997 • **FAX:** (718) 482-4975
Website: www.dec.state.ny.us

Alexander B.
Grannis
Commissioner

May 21, 2009

George Klein, P.E.
Deputy Chief Engineer
NYCDOT
40 Worth Street, Room 1228
New York, NY 10003

Re: NYSDEC Permit application #2-6304-01440/00008
Borden Avenue Bridge West Abutment and Wingwall Reconstruction
Temporary construction dewatering discharge
ECL Article 17 -- Water Pollution Control
NOTICE OF DETERMINATION OF NO JURISDICTION

Dear Mr. Klein:

The action referenced above, as described in the jurisdictional determination request submitted on your behalf by Moretrench American Corporation dated February 23, 2009 and received March 4, 2009 and responses and clarifications dated April 9, 2009, May 14, 2009 and May 15, 2009, and assigned application number 2-6304-01440/00008 is not within the jurisdiction of the DEC under the Water Pollution Control Act (Article 17 of the Environmental Conservation Law). Therefore, an individual DEC SPDES permit is not required at this time to discharge this groundwater in the manner described in the referenced jurisdictional determination request.

The Division of Water, following a review of the submitted water sample test results, taken from a monitoring well, has determined that the groundwater at the site does not contain pollutants at levels of concern. Based on these sample results, it has been determined that no permissions or State Pollutant Discharge Elimination System permits are required from this Department for the discharge of unpolluted water from the dewatering well(s). This determination is based on the submitted sample results, and should it be determined at any time during pumping that pollutants are present, the discharge must be halted to avoid a violation of the Environmental Conservation Law and an application for an Industrial SPDES permit must be filed immediately. Please also note the following provisions:

1) The discharge shall not cause a violation of the water quality standards of the receiving waters.

2) The discharge shall not cause a substantial visible contrast to the natural conditions of the receiving waters.

3) The discharge shall not cause or contain a visible oil sheen, foam, or floating solids at any time.

4) Operations must conform with Drawing entitled "Moretrench Boreden Avenue Bridge, Drawing Number 1" dated April 23, 2009, signed and stamped by Leonard R. Guglielmo, P.E., received by NYSDEC on May 5, 2009 and Drawing entitled "50 Yard Roll-off Settling Tank Equipment Specification" dated March 27, 2009, received by NYSDEC on May 12, 2009.

5) The maximum discharge allowed under this Determination is 864,000 gallons per day.

You must, as described in your submittal, direct this discharge into the temporary 12" outfall which discharges to Dutch Kills.

Technical questions concerning this matter should be directed to Chan Chakrabarti in the Division of Water at (718) 482-4947.

Sincerely,

John F. Cryan
Regional Permit Administrator

cc: Chan Chakrabarti, NYSDEC DOW
Selvin Southwell, NYSDEC DOW
Jesselynne Krief, Marine Resources
Joe Mahon, Moretrench
Alan Marchan, STV Incorporated
John Aitken, Maracap Construction Industries, Inc.
File

New York State Department of Environmental Conservation
Division of Environmental Permits, Region 2
47-40 21st Street, Long Island City, NY 11101-5407
Phone: (718) 482-4997 • **FAX:** (718) 482-4976
Website: www.dec.state.ny.us

Alexander B
Grannis
Commissioner

May 21, 2009

George Klein, P.E.
Deputy Chief Engineer
NYCDOT
40 Worth Street, Room 1228
New York, NY 10003

Re: NYSDEC Permit application #2-6304-01440/00008
Borden Avenue Bridge West Abutment and Wingwall Reconstruction
Temporary construction dewatering discharge
ECL Article 15, Title 15 - Long Island Well
NOTICE OF PERMIT Issuance

Dear Mr. Klein:

Enclosed is your Long Island Well permit for the above referenced project. It is effective beginning May 21, 2009 and expires on December 31, 2009.

Please read all permit conditions carefully. All permit documents must be available at the site upon request by Department staff and must be distributed to and understood by personnel responsible for the proper operation of the facility and compliance with the permit requirements. Any violation of these permit conditions constitutes a violation of the Environmental Conservation Law.

Please note that the maximum withdrawal rate authorized by this permit is 864,000 gallons per day.

Please note Special Condition #9 - Withdrawal not Authorized until Permit #2-6304-01440/00004 modified

If you have any questions regarding this permit, you may contact the Division of Environmental Permits at the above address. Please refer to the above referenced numbers when you are corresponding with this office or when you are applying to renew or modify this permit.

Sincerely,

Stephen A. Watts III
Environmental Program Specialist II

cc: Chan Chakrabarti, NYSDEC DOW
Selvin Southwell, NYSDEC DOW
Jesselynne Krief, Marine Resources
Joe Mahon, Moretrench
Alan Marchan, STV Incorporated
John Aitken, Maracap Construction Industries, Inc.
File

NEW YORK STATE DEPARTMENT OF ENVIRONMENTAL CONSERVATION
Facility DEC ID 2-6304-01440

PERMIT

Under the Environmental Conservation Law (ECL)

Permittee and Facility Information

Permit Issued To:
NYC DEPT OF TRANSPORTATION
40 WORTH ST 11TH FL
NEW YORK, NY 10003
(212) 676-0557

Facility:
NYC DOT - BORDEN AVE BRIDGE
BORDEN AVE BTWN 25TH & 27TH ST
LONG ISLAND CITY, NY 11101

Facility Location: in QUEENS COUNTY
Facility Principal Reference Point: NYTM-E: 589.262 NYTM-N: 4510.311
Latitude: 41°44'20.1" Longitude: 74°56'34.1"

Authorized Activity: Install and operate a temporary dewatering system to facilitate reconstruction of the west abutment and wingwalls of the Borden Avenue Bridge over the Dutch Kills in Queens with a maximum withdrawal of 864,000 gallons per day. Pumped groundwater is to be directed to a temporary 12" outfall into Dutch Kills.

Permit Authorizations

Long Island Well - Under Article 15, Title 15
Permit ID 2-6304-01440/00007
New Permit Effective Date: 5/21/2009 Expiration Date: 12/31/2009

NYSDEC Approval

By acceptance of this permit, the permittee agrees that the permit is contingent upon strict compliance with the ECL, all applicable regulations, and all conditions included as part of this permit.

Permit Administrator: JOHN F CRYAN, Regional Permit Administrator
Address: NYSDEC REGION 2 HEADQUARTERS
47-40 21ST ST
LONG ISLAND CITY, NY 11101 -5407

Authorized Signature: John F. Cryan Date 05/21/09

Permit Components

LONG ISLAND WELL PERMIT CONDITIONS

GENERAL CONDITIONS, APPLY TO ALL AUTHORIZED PERMITS

NOTIFICATION OF OTHER PERMITTEE OBLIGATIONS

LONG ISLAND WELL PERMIT CONDITIONS

1. **Conformance With Plans** All activities authorized by this permit must be in strict conformance with the approved plans submitted by the applicant or applicant's agent as part of the permit application. Such approved plans were prepared by Moretrench American for NYCDOT.

2. **Conformance with Plans - Addenda** In addition to plans referenced in the Condition titled "Conformance with Plans," the activities authorized by this permit must be in strict conformance with the following approved plans and/or submissions made as part of the permit application:

A. Drawing entitled "Moretrench Boreden Avenue Bridge, Drawing Number 1" dated April 23, 2009, signed and stamped by Leonard R. Guglielmo, P.E., received by NYSDEC on May 5, 2009;

B. Drawing entitled "50 Yard Roll-off Settling Tank Equipment Specification" dated March 27, 2009, received by NYSDEC on May 12, 2009.

C. Region 2 Long Island Well Dewatering System Detail Sheet, signed by T.Aleksander Patrick on 5/5/09, received by NYSDEC on 5/5/09.

D. Application package dated February 23, 2009, received March 4, 2009 and responses to Incomplete Notices dated April 19, 2009, May 5, 2009 and May 8, 2009.

3. **Dewatering Wells, Pumps, Pump Capacities and Maximum Withdrawal** This permit authorizes the following:

- **Dewatering Wells - 12**
- **Installed Pumps - 12 (Only 6 of 12 pumps are authorized to operate simultaneously)**
- **Pump Capacity - 100 GPM (10 HP) pumps** (Pump of lesser capacity may be substituted at permittee's discretion.)
- **Maximum Withdrawal - 864,000 gallons per day**

4. **Daily Pump Log** A daily pump log must be kept at the project site at all times. The pump log must be made available to authorized representatives of the Department during pumping operations.

5. **Handling of Contaminated Groundwater** The permittee is fully responsible for proper handling and all costs associated with the proper sampling, treatment and disposal of any contaminated groundwater.

6. **Well Driller Registration** The dewatering operation shall be performed by Well Drillers duly registered in accordance with Section 15-1525 of the Environmental Conservation Law of the State of New York.

7. **Notice of Intent to Commence Work** At least five (5) days prior to commencement of the permitted activity, Permittee must complete and submit the attached "Notice of Intent to Commence Work" to NYSDEC Division of Water, 47-40 21st Street, Long Island City, NY 11101 (Attention: Chan Chakrabarti).

8. **Posting of NYSDEC Permit Sign** The attached NYSDEC permit sign shall be posted, protected from the weather, in a conspicuous outdoor location at the project site. This sign is to be posted for the duration of work authorized by this permit.

9. **Withdrawal not Authorized until Permit #2-6304-01440/00004 modified** This permit does not authorize the withdrawal or discharge of groundwater until Tidal Wetland permit 2-6304-01440/00004 is modified.

GENERAL CONDITIONS - Apply to ALL Authorized Permits:

1. **Facility Inspection by The Department** The permitted site or facility, including relevant records, is subject to inspection at reasonable hours and intervals by an authorized representative of the Department of Environmental Conservation (the Department) to determine whether the permittee is complying with this permit and the ECL. Such representative may order the work suspended pursuant to ECL 71- 0301 and SAPA 401(3).

The permittee shall provide a person to accompany the Department's representative during an inspection to the permit area when requested by the Department.

A copy of this permit, including all referenced maps, drawings and special conditions, must be available for inspection by the Department at all times at the project site or facility. Failure to produce a copy of the permit upon request by a Department representative is a violation of this permit.

2. **Relationship of this Permit to Other Department Orders and Determinations** Unless expressly provided for by the Department, issuance of this permit does not modify, supersede or rescind any order or determination previously issued by the Department or any of the terms, conditions or requirements contained in such order or determination.

3. **Applications For Permit Renewals, Modifications or Transfers** The permittee must submit a separate written application to the Department for permit renewal, modification or transfer of this permit. Such application must include any forms or supplemental information the Department requires. Any renewal, modification or transfer granted by the Department must be in writing. Submission of applications for permit renewal, modification or transfer are to be submitted to:

Regional Permit Administrator
NYSDEC REGION 2 HEADQUARTERS
47-40 21ST ST
LONG ISLAND CITY, NY11101 -5407

4. **Submission of Renewal Application** The permittee must submit a renewal application at least 30 days before permit expiration for the following permit authorizations: Long Island Well.

5. **Permit Modifications, Suspensions and Revocations by the Department** The Department reserves the right to modify, suspend or revoke this permit. The grounds for modification, suspension or revocation include:

a. materially false or inaccurate statements in the permit application or supporting papers;

b. failure by the permittee to comply with any terms or conditions of the permit;

c. exceeding the scope of the project as described in the permit application;

d. newly discovered material information or a material change in environmental conditions, relevant technology or applicable law or regulations since the issuance of the existing permit;

e. noncompliance with previously issued permit conditions, orders of the commissioner, any provisions of the Environmental Conservation Law or regulations of the Department related to the permitted activity.

6. Permit Transfer Permits are transferrable unless specifically prohibited by statute, regulation or another permit condition. Applications for permit transfer should be submitted prior to actual transfer of ownership.

NOTIFICATION OF OTHER PERMITTEE OBLIGATIONS

Item A: Permittee Accepts Legal Responsibility and Agrees to Indemnification
The permittee, excepting state or federal agencies, expressly agrees to indemnify and hold harmless the Department of Environmental Conservation of the State of New York, its representatives, employees, and agents ("DEC") for all claims, suits, actions, and damages, to the extent attributable to the permittee's acts or omissions in connection with the permittee's undertaking of activities in connection with, or operation and maintenance of, the facility or facilities authorized by the permit whether in compliance or not in compliance with the terms and conditions of the permit. This indemnification does not extend to any claims, suits, actions, or damages to the extent attributable to DEC's own negligent or intentional acts or omissions, or to any claims, suits, or actions naming the DEC and arising under Article 78 of the New York Civil Practice Laws and Rules or any citizen suit or civil rights provision under federal or state laws.

Item B: Permittee's Contractors to Comply with Permit
The permittee is responsible for informing its independent contractors, employees, agents and assigns of their responsibility to comply with this permit, including all special conditions while acting as the permittee's agent with respect to the permitted activities, and such persons shall be subject to the same sanctions for violations of the Environmental Conservation Law as those prescribed for the permittee.

Item C: Permittee Responsible for Obtaining Other Required Permits
The permittee is responsible for obtaining any other permits, approvals, lands, easements and rights-of-way that may be required to carry out the activities that are authorized by this permit.

Item D: No Right to Trespass or Interfere with Riparian Rights
This permit does not convey to the permittee any right to trespass upon the lands or interfere with the riparian rights of others in order to perform the permitted work nor does it authorize the impairment of any rights, title, or interest in real or personal property held or vested in a person not a party to the permit.

NOTICE OF INTENT TO COMMENCE WORK

Date: _____

Division of Water
Attn. Chan Chakrabarti
NYSDEC Region 2 Office
47-40 21st Street
Long Island City, N.Y. 11101

Re: NYSDEC Permit No. 2-6304-01440/00007
Temporary Construction Dewatering
NYCDOT - Borden Avenue Bridge

Dear Mr. Chakrabarti:

In accordance with Long Island Well Condition 7 of the referenced permit, I hereby serve notice to commence work on _____, 20____.

This is also to certify that, having read the entire permit, I am fully aware of and understand the general and Long Island Well conditions therein, and agree to comply with all such conditions. Further, I understand that prior to undertaking any modification to the permitted work, I must seek a permit modification from the NYSDEC Regional Permit Administrator.

_____
Signature of Permittee

_____
Name of Permittee (please print)

_____
Signature of Contractor

_____
Name of Contractor (please print)

_____
Street Address of Contractor

_____
City, State, & Zip Code of Contractor

_____
Telephone Number of Contractor

WARNING

The permittee and their contractor(s) (if any) are required to follow all permit conditions. Violations of the permit may lead to legal action, including the imposition of substantial monetary fines and corrective work.

cc: Steve Watts, Division of Environmental Permits

DS-20-1 (11/09) - ed

New York State
Department of Environmental Conservation

NOTICE

The Department of Environmental Conservation (DEC) has issued permit(s) pursuant to the Environmental Conservation Law for work being conducted at this site. For further information regarding the nature and extent of the approved work and any Department conditions applied to the approval, contact the Regional Permit Administrator listed below. Please refer to the permit number shown when contacting the DEC.

Permit Number 2-6304-01440/00007

Expiration Date 12/31/2009

Regional Permit Administrator

John F. Cryan
47-40 21st Street
LIC, NY 11101
(718) 482-4997

NOTE: This notice is **NOT** a permit

APPENDIX B - TEST AMERICA ANALYTICAL DATA REPORT

TestAmerica

THE LEADER IN ENVIRONMENTAL TESTING

ANALYTICAL REPORT

Job Number: 220-9412-1

SDG Number: 220-9412

Job Description: Borden Ave Bridge

For:
STV Incorporated
225 Park Avenue South
New York, NY 10003

Attention: Mr. Brian Connolly

Approved for release
Patty A Mercure
6/29/2009 1:01 PM

Designee for
Jill M Duhancik
Project Manager I
jill.duhancik@testamericainc.com
06/29/2009

The test results in this report meet all NELAP requirements unless specified within the case narrative. Pursuant to NELAP, this report may not be reproduced, except in full, without the written approval of the laboratory. All questions regarding this report should be directed to the TestAmerica Project Manager.

TestAmerica Connecticut Certifications and Approvals: CTDOH PH-047, MADEP CT023, RIDOH A43, NYDOH 10602, NY NELAP 10602, NHDES 2528, NJDEP CT410, ME DOH CT023, UT DOH 2032614458

TestAmerica Laboratories, Inc.
TestAmerica Connecticut 128 Long Hill Cross Road, Shelton, CT 06484
Tel (203) 929-8140 Fax (203) 929-8142 www.testamericainc.com

ACCREDITED IN ACCORDANCE WITH nelac

Case Narrative for Job: 220-9412-1

Client: STV Incorporated
Date: June 29, 2009

I certify that this data package is in compliance with the terms and conditions of this contract, both technically and for completeness, for other than the conditions detailed above. Release of the data contained in this hardcopy data package and in the computer-readable data submitted on diskette has been authorized by the Laboratory Manager or his designee, as verified by the following signature.

Lawrence Decker
Laboratory Director

June 29, 2009
Date

Job Narrative
220-J9412-1

Comments
No additional comments.

Receipt
Method(s) 8015B: The container label for the following samples did not match the information listed on the Chain-of-Custody (COC): S-1 (220-9412-3), S-2 (220-9412-4). The container labels list S-2 is on the container label time list 11:15 and S-1 is listed on the container cap while the COC lists ?. There are two samples a- 3 and a - 4, both times list 11:15 June 19 2009 and both labels list S-2 as the sample IDS. One cap list S-1 and the other cap list S-2.

All other samples were received in good condition within temperature requirements.

GC/MS VOA
Method(s) 8260B: Surrogate recovery for the following sample was outside control limits: S-1 (220-9412-3). Evidence of matrix interference is present; re-analysis was performed and confirmed. The first set of data was reported.

No other analytical or quality issues were noted.

GC/MS Semi VOA
Method(s) 8270C: Internal standard (ISTD) response for the following sample was outside control limits: W-TANK (220-9412-1). The sample was re-analyzed with concurring results. The original set of data has been reported.

No other analytical or quality issues were noted.

GC VOA
No analytical or quality issues were noted.

GC Semi VOA
Method(s) 8015B: The laboratory analyzes the following compounds for fingerprint analysis: #2 Fuel Oil, #4 Fuel Oil, #6 Fuel Oil, Kerosene, Gasoline, Motor Oil, and Coal Tar. The elution pattern present in the client's samples are compared to these standards to determine the best match. The carbon range for the following samples is between a #6 Fuel Oil and motor oil, however, because of differences of such magnitude, it is impossible to determine whether the unknown is a combination of the two or a completely different oil:S-1 (220-9412-3), S-2 (220-9412-4), W-EXC (220-9412-2), W-TANK (220-9412-1)

Method(s) 8081A: The capping continuing calibration verification (CCV) analyzed on 6/23/09 on GC-hp-6890-8 failed on both columns. These samples were analyzed in another bracket with concurring results.

Method(s) 8081A: The continuing calibration verification (CCV) for 6/24/09 recovered above the upper control limit. The samples associated with this CCV were non-detects for the affected analytes; therefore, the data have been reported.

No other analytical or quality issues were noted.

Metals
No analytical or quality issues were noted.

General Chemistry
Method(s) 9045C: This analysis is normally performed in the field and has a method-defined holding time of 15 minutes. All associated samples have been qualified with the "HF" flag to indicate they were performed in the laboratory outside the 15 minute timeframe.

No other analytical or quality issues were noted.

Organic Prep
No analytical or quality issues were noted.

VOA Prep
No analytical or quality issues were noted.

EXECUTIVE SUMMARY - Detections

Client: STV Incorporated

Job Number: 220-9412-1
Sdg Number: 220-9412

Lab Sample ID / Analyte	Client Sample ID	Result / Qualifier		Reporting Limit	Units	Method
220-9412-1	W-TANK					
Acetone		16	*	10	ug/L	8260B
Acenaphthene		3.6	J	17	ug/L	8270C
Acenaphthylene		2.2	J	17	ug/L	8270C
Anthracene		5.4	J	17	ug/L	8270C
Benzo[a]anthracene		8.6	J	17	ug/L	8270C
Benzo[a]pyrene		5.3	J	17	ug/L	8270C
Benzo[b]fluoranthene		4.4	J	17	ug/L	8270C
Benzo[g,h,i]perylene		6.5	J	17	ug/L	8270C
Benzo[k]fluoranthene		1.7	J	17	ug/L	8270C
Bis(2-ethylhexyl) phthalate		290		17	ug/L	8270C
Chrysene		8.3	J	17	ug/L	8270C
Dibenz(a,h)anthracene		3.1	J	17	ug/L	8270C
Dibenzofuran		2.1	J	17	ug/L	8270C
Fluoranthene		17		17	ug/L	8270C
Fluorene		3.5	J	17	ug/L	8270C
Indeno[1,2,3-cd]pyrene		4.0	J	17	ug/L	8270C
2-Methylnaphthalene		2.5	J	17	ug/L	8270C
Naphthalene		1.9	J	17	ug/L	8270C
Phenanthrene		13	J	17	ug/L	8270C
Pyrene		19		17	ug/L	8270C
Gasoline Range Organics (GRO)-C6-C10		0.018	J	0.050	mg/L	8015B
Diesel Range Organics [C10-C28]		11000		5000	ug/L	8015B
PCB-1242		1.6		0.50	ug/L	8082
PCB-1254		2.3		0.50	ug/L	8082
PCB-1260		2.2		0.50	ug/L	8082
Arsenic		25.8		12.5	ug/L	6020
Cadmium		13.1		12.5	ug/L	6020
Chromium		101		25.0	ug/L	6020
Copper		290		25.0	ug/L	6020
Nickel		126		12.5	ug/L	6020
Lead		280		12.5	ug/L	6020
Antimony		16.2	J	20.0	ug/L	6020
Zinc		506		125	ug/L	6020
Mercury		0.44		0.20	ug/L	7470A

EXECUTIVE SUMMARY - Detections

Client: STV Incorporated

Job Number: 220-9412-1
Sdg Number: 220-9412

Lab Sample ID / Analyte	Client Sample ID	Result / Qualifier		Reporting Limit	Units	Method
220-9412-2	W-EXC					
Acetone		6.2	J *	10	ug/L	8260B
Acenaphthene		0.66	J	4.1	ug/L	8270C
Anthracene		0.56	J	4.1	ug/L	8270C
Benzo[a]anthracene		0.74	J	4.1	ug/L	8270C
Benzo[a]pyrene		0.60	J	4.1	ug/L	8270C
Benzo[b]fluoranthene		0.52	J	4.1	ug/L	8270C
Benzo[g,h,i]perylene		1.6	J	4.1	ug/L	8270C
Bis(2-ethylhexyl) phthalate		17		4.1	ug/L	8270C
Chrysene		0.66	J	4.1	ug/L	8270C
Di-n-butyl phthalate		0.40	J	4.1	ug/L	8270C
Fluoranthene		1.7	J	4.1	ug/L	8270C
Fluorene		0.57	J	4.1	ug/L	8270C
Indeno[1,2,3-cd]pyrene		0.92	J	4.1	ug/L	8270C
Naphthalene		0.38	J	4.1	ug/L	8270C
Phenanthrene		1.4	J	4.1	ug/L	8270C
Pyrene		2.2	J	4.1	ug/L	8270C
Diesel Range Organics [C10-C28]		890		500	ug/L	8015B
Arsenic		7.3	J	12.5	ug/L	6020
Chromium		18.4	J	25.0	ug/L	6020
Copper		54.8		25.0	ug/L	6020
Nickel		30.0		12.5	ug/L	6020
Lead		47.0		12.5	ug/L	6020
Zinc		103	J	125	ug/L	6020

EXECUTIVE SUMMARY - Detections

Client: STV Incorporated

Job Number: 220-9412-1
Sdg Number: 220-9412

Lab Sample ID / Analyte	Client Sample ID	Result / Qualifier		Reporting Limit	Units	Method
220-9412-3	S-1					
Acetone		210	J *	230	ug/Kg	8260B
Benzene		27	J	57	ug/Kg	8260B
Carbon disulfide		11	J	57	ug/Kg	8260B
Ethylbenzene		50	J	57	ug/Kg	8260B
Methylene Chloride		100	J B	230	ug/Kg	8260B
1,1,2,2-Tetrachloroethane		390		57	ug/Kg	8260B
Xylenes, Total		300		57	ug/Kg	8260B
Acenaphthene		2000	J	12000	ug/Kg	8270C
Anthracene		5000	J	12000	ug/Kg	8270C
Benzo[a]anthracene		6200	J	12000	ug/Kg	8270C
Benzo[a]pyrene		6400	J	12000	ug/Kg	8270C
Benzo[b]fluoranthene		5000	J	12000	ug/Kg	8270C
Benzo[g,h,i]perylene		11000	J	12000	ug/Kg	8270C
Benzo[k]fluoranthene		1900	J	12000	ug/Kg	8270C
Bis(2-ethylhexyl) phthalate		130000		12000	ug/Kg	8270C
Chrysene		6900	J	12000	ug/Kg	8270C
Dibenz(a,h)anthracene		11000	J	12000	ug/Kg	8270C
Dibenzofuran		1500	J	12000	ug/Kg	8270C
Fluoranthene		12000	J	12000	ug/Kg	8270C
Fluorene		2800	J	12000	ug/Kg	8270C
Indeno[1,2,3-cd]pyrene		14000		12000	ug/Kg	8270C
2-Methylnaphthalene		6000	J	12000	ug/Kg	8270C
Naphthalene		3300	J	12000	ug/Kg	8270C
Phenanthrene		14000		12000	ug/Kg	8270C
Pyrene		19000		12000	ug/Kg	8270C
Gasoline Range Organics (GRO)-C6-C10		28		11	mg/Kg	8015B
Diesel Range Organics [C10-C28]		5100000		960000	ug/Kg	8015B
4,4'-DDD		310		38	ug/Kg	8081A
4,4'-DDE		130		38	ug/Kg	8081A
4,4'-DDT		410	*	38	ug/Kg	8081A
Aldrin		6.4	J	19	ug/Kg	8081A
beta-BHC		18	J	19	ug/Kg	8081A
Dieldrin		180		38	ug/Kg	8081A
Endrin		270		38	ug/Kg	8081A
Endrin aldehyde		75		38	ug/Kg	8081A
Endrin ketone		76		38	ug/Kg	8081A
Heptachlor		41		19	ug/Kg	8081A
Heptachlor epoxide		27		19	ug/Kg	8081A
Methoxychlor		96	J *	190	ug/Kg	8081A
alpha-Chlordane		61		19	ug/Kg	8081A
gamma-Chlordane		94		19	ug/Kg	8081A
PCB-1242		590		77	ug/Kg	8082
PCB-1254		520		77	ug/Kg	8082
PCB-1260		760		77	ug/Kg	8082
Silver		11.2		1.0	mg/Kg	6020
Arsenic		45.6		1.0	mg/Kg	6020
Beryllium		0.70	J	1.0	mg/Kg	6020
Cadmium		51.6		1.0	mg/Kg	6020

EXECUTIVE SUMMARY - Detections

Client: STV Incorporated

Job Number: 220-9412-1
Sdg Number: 220-9412

Lab Sample ID / Client Sample ID / Analyte	Result / Qualifier		Reporting Limit	Units	Method
Chromium	342		2.0	mg/Kg	6020
Copper	974		2.0	mg/Kg	6020
Nickel	392		1.0	mg/Kg	6020
Lead	607		1.0	mg/Kg	6020
Antimony	8.5		1.6	mg/Kg	6020
Selenium	8.8		2.0	mg/Kg	6020
Thallium	0.56	J	1.4	mg/Kg	6020
Zinc	1350		10	mg/Kg	6020
Mercury	2.4		0.55	mg/Kg	7471A
Ignitability	neg		2.2	mm/sec	1030
Temperature	1890		1.00	Fahrenheit	1030
Sulfide, Reactive	372		20.0	mg/Kg	9034
pH	8.52	HF	0.100	SU	9045C
Percent Moisture	56.4		0.10	%	Moisture
Percent Solids	43.6		0.10	%	Moisture
TCLP					
Methyl Ethyl Ketone	0.0084	J B	0.010	mg/L	8260B
Benzene	0.00082	J	0.0050	mg/L	8260B
Arsenic	0.064	J	0.075	mg/L	6010B
Barium	0.33		0.025	mg/L	6010B
Chromium	0.023	J	0.025	mg/L	6010B

EXECUTIVE SUMMARY - Detections

Client: STV Incorporated

Job Number: 220-9412-1
Sdg Number: 220-9412

Lab Sample ID / Analyte	Client Sample ID	Result / Qualifier		Reporting Limit	Units	Method
220-9412-4	S-2					
Acetone		340	*	220	ug/Kg	8260B
Benzene		10	J	54	ug/Kg	8260B
Carbon disulfide		20	J	54	ug/Kg	8260B
Ethylbenzene		19	J	54	ug/Kg	8260B
Methylene Chloride		98	J B	220	ug/Kg	8260B
Toluene		2.4	J B	54	ug/Kg	8260B
Xylenes, Total		90		54	ug/Kg	8260B
Acenaphthene		2400	J	12000	ug/Kg	8270C
Acenaphthylene		2100	J	12000	ug/Kg	8270C
Anthracene		7500	J	12000	ug/Kg	8270C
Benzo[a]anthracene		8900	J	12000	ug/Kg	8270C
Benzo[a]pyrene		7200	J	12000	ug/Kg	8270C
Benzo[b]fluoranthene		5300	J	12000	ug/Kg	8270C
Benzo[g,h,i]perylene		11000	J	12000	ug/Kg	8270C
Benzo[k]fluoranthene		1800	J	12000	ug/Kg	8270C
Bis(2-ethylhexyl) phthalate		110000		12000	ug/Kg	8270C
Chrysene		9200	J	12000	ug/Kg	8270C
Dibenz(a,h)anthracene		11000	J	12000	ug/Kg	8270C
Dibenzofuran		1400	J	12000	ug/Kg	8270C
Fluoranthene		15000		12000	ug/Kg	8270C
Fluorene		1700	J	12000	ug/Kg	8270C
Indeno[1,2,3-cd]pyrene		14000		12000	ug/Kg	8270C
2-Methylnaphthalene		2200	J	12000	ug/Kg	8270C
Naphthalene		2900	J	12000	ug/Kg	8270C
Phenanthrene		8700	J	12000	ug/Kg	8270C
Pyrene		21000		12000	ug/Kg	8270C
Gasoline Range Organics (GRO)-C6-C10		50		11	mg/Kg	8015B
Diesel Range Organics [C10-C28]		7000000		3600000	ug/Kg	8015B
4,4'-DDD		120		14	ug/Kg	8081A
4,4'-DDE		66		14	ug/Kg	8081A
4,4'-DDT		260	*	14	ug/Kg	8081A
alpha-BHC		3.0	J	7.3	ug/Kg	8081A
beta-BHC		8.3		7.3	ug/Kg	8081A
Dieldrin		74		14	ug/Kg	8081A
Endrin		200		14	ug/Kg	8081A
Endrin aldehyde		46		14	ug/Kg	8081A
Endrin ketone		43		14	ug/Kg	8081A
Heptachlor		26		7.3	ug/Kg	8081A
Heptachlor epoxide		11		7.3	ug/Kg	8081A
Methoxychlor		61	J *	73	ug/Kg	8081A
alpha-Chlordane		31		7.3	ug/Kg	8081A
gamma-Chlordane		32		7.3	ug/Kg	8081A
PCB-1242		720		180	ug/Kg	8082
PCB-1254		1100		180	ug/Kg	8082
PCB-1260		890		180	ug/Kg	8082
Silver		19.5		0.74	mg/Kg	6020
Arsenic		34.0		0.74	mg/Kg	6020
Beryllium		0.80		0.74	mg/Kg	6020

EXECUTIVE SUMMARY - Detections

Client: STV Incorporated

Job Number: 220-9412-1
Sdg Number: 220-9412

Lab Sample ID / Client Sample ID / Analyte	Result / Qualifier		Reporting Limit	Units	Method
Cadmium	104		0.74	mg/Kg	6020
Chromium	530		1.5	mg/Kg	6020
Copper	1450		1.5	mg/Kg	6020
Nickel	337		0.74	mg/Kg	6020
Lead	1370		0.74	mg/Kg	6020
Antimony	7.3		1.2	mg/Kg	6020
Selenium	5.0		1.5	mg/Kg	6020
Thallium	0.31	J	1.0	mg/Kg	6020
Zinc	2240		7.4	mg/Kg	6020
Mercury	2.6		0.54	mg/Kg	7471A
Ignitability	neg		2.2	mm/sec	1030
Temperature	1890		1.00	Fahrenheit	1030
Sulfide, Reactive	644		19.9	mg/Kg	9034
pH	8.34	HF	0.100	SU	9045C
Percent Moisture	53.7		0.10	%	Moisture
Percent Solids	46.3		0.10	%	Moisture
TCLP					
Methyl Ethyl Ketone	0.0085	J B	0.010	mg/L	8260B
Benzene	0.0018	J	0.0050	mg/L	8260B
Heptachlor	0.000042	J	0.00025	mg/L	8081A
Barium	0.34		0.025	mg/L	6010B
Chromium	0.038		0.025	mg/L	6010B

METHOD SUMMARY

Client: STV Incorporated

Job Number: 220-9412-1
Sdg Number: 220-9412

Description	Lab Location	Method	Preparation Method
Matrix Solid			
Volatile Organic Compounds (GC/MS)	TAL CT	SW846 8260B	
TCLP Extraction	TAL CT		SW846 1311
Purge and Trap	TAL CT		SW846 5030B
Semivolatile Compounds by Gas Chromatography/Mass Spectrometry (GC/MS)	TAL CT	SW846 8270C	
TCLP Extraction	TAL CT		SW846 1311
Liquid-Liquid Extraction (Separatory Funnel)	TAL CT		SW846 3510C
Automated Soxhlet Extraction	TAL CT		SW846 3541
Gasoline Range Organics - (GC)	TAL SAV	SW846 8015B	
Purge and Trap	TAL SAV		SW846 5030A
Diesel Range Organics (DRO) (GC)	TAL CT	SW846 8015B	
Hydrocarbon Product Identification (GC)	TAL CT	SW846 8015B	
Ultrasonic Extraction	TAL CT		SW846 3550B
Ultrasonic Extraction	TAL CT		SW846 3550B
Organochlorine Pesticides (GC)	TAL CT	SW846 8081A	
TCLP Extraction	TAL CT		SW846 1311
Liquid-Liquid Extraction (Separatory Funnel)	TAL CT		SW846 3510C
Ultrasonic Extraction	TAL CT		SW846 3550B
Polychlorinated Biphenyls (PCBs) by Gas Chromatography	TAL CT	SW846 8082	
Ultrasonic Extraction	TAL CT		SW846 3550B
Herbicides (GC)	TAL SAV	SW846 8151A	
TCLP Extraction	TAL SAV		SW846 1311
Extraction (Herbicides)	TAL SAV		SW846 8151A
Metals (ICP)	TAL CT	SW846 6010B	
TCLP Extraction	TAL CT		SW846 1311
Preparation, Total Metals	TAL CT		SW846 3010A
Metals (ICP/MS)	TAL CT	SW846 6020	
Preparation, Metals	TAL CT		SW846 3050B
Mercury (CVAA)	TAL CT	SW846 7470A	
TCLP Extraction	TAL CT		SW846 1311
Preparation, Mercury	TAL CT		SW846 7470A
Mercury (CVAA)	TAL CT	SW846 7471A	
Preparation, Mercury	TAL CT		SW846 7471A
Ignitability, Solids	TAL CT	SW846 1030	
Chromium, Hexavalent	TAL SAV	SW846 7196A	
Alkaline Digestion (Chromium, Hexavalent)	TAL SAV		SW846 3060A
Cyanide, Reactive	TAL CT	SW846 9012	
Cyanide, Reactive	TAL CT		SW846 7.3.3
Sulfide, Reactive	TAL CT	SW846 9034	
Sulfide, Reactive	TAL CT		SW846 7.3.4

METHOD SUMMARY

Client: STV Incorporated

Job Number: 220-9412-1
Sdg Number: 220-9412

Description	Lab Location	Method	Preparation Method
Matrix Solid			
pH	TAL CT	SW846 9045C	
Percent Moisture	TAL CT	EPA Moisture	
Matrix Water			
Volatile Organic Compounds (GC/MS)	TAL CT	SW846 8260B	
Purge and Trap	TAL CT		SW846 5030B
Semivolatile Compounds by Gas Chromatography/Mass Spectrometry (GC/MS)	TAL CT	SW846 8270C	
Liquid-Liquid Extraction (Separatory Funnel)	TAL CT		SW846 3510C
Gasoline Range Organics - (GC)	TAL SAV	SW846 8015B	
Purge and Trap	TAL SAV		SW846 5030B
Diesel Range Organics (DRO) (GC)	TAL CT	SW846 8015B	
Hydrocarbon Product Identification (GC)	TAL CT	SW846 8015B	
Liquid-Liquid Extraction (Separatory Funnel)	TAL CT		SW846 3510C
Liquid-Liquid Extraction (Separatory Funnel)	TAL CT		SW846 3510C
Polychlorinated Biphenyls (PCBs) by Gas Chromatography	TAL CT	SW846 8082	
Liquid-Liquid Extraction (Separatory Funnel)	TAL CT		SW846 3510C
Metals (ICP/MS)	TAL CT	SW846 6020	
Preparation, Total Metals	TAL CT		SW846 3010A
Mercury (CVAA)	TAL CT	SW846 7470A	
Preparation, Mercury	TAL CT		SW846 7470A

Lab References:

TAL CT = TestAmerica Connecticut

TAL SAV = TestAmerica Savannah

Method References:

EPA = US Environmental Protection Agency

SW846 = "Test Methods For Evaluating Solid Waste, Physical/Chemical Methods", Third Edition, November 1986 And Its Updates.

METHOD / ANALYST SUMMARY

Client: STV Incorporated

Job Number: 220-9412-1
Sdg Number: 220-9412

Method	Analyst	Analyst ID
SW846 8260B	Kostrzewska, Barbara	BK
SW846 8260B	Paveglio, Peter R	PRP
SW846 8270C	Jonas, Stephan	SJ
SW846 8015B	Moncrief, Amy	AM
SW846 8015B	Widomski, Sarah	SW
SW846 8081A	Cooper, Susan	SC
SW846 8082	Smith, Karli	KS
SW846 8151A	Kellar, Joshua	JK
SW846 6010B	Petronchak, Nestor	NP
SW846 6020	Petronchak, Nestor	NP
SW846 7470A	Voytek, Joseph F	JFV
SW846 7471A	Voytek, Joseph F	JFV
SW846 1030	Tillotson, Ray	RT
SW846 7196A	Ross, Jon	JR
SW846 9012	Natoli, Richard A	RN
SW846 9034	Natoli, Richard A	RN
SW846 9045C	Mendoza, Julia	JM
EPA Moisture	Capece, Bill	BC

SAMPLE SUMMARY

Client: STV Incorporated

Job Number: 220-9412-1
Sdg Number: 220-9412

Lab Sample ID	Client Sample ID	Client Matrix	Date/Time Sampled	Date/Time Received
220-9412-1	W-TANK	Water	06/19/2009 1030	06/20/2009 0748
220-9412-2	W-EXC	Water	06/19/2009 1000	06/20/2009 0748
220-9412-3	S-1	Solid	06/19/2009 1045	06/20/2009 0748
220-9412-4	S-2	Solid	06/19/2009 1115	06/20/2009 0748

SAMPLE RESULTS

Client: STV Incorporated

Job Number: 220-9412-1
Sdg Number: 220-9412

Client Sample ID: **W-TANK**

Lab Sample ID: 220-9412-1
Client Matrix: Water

Date Sampled: 06/19/2009 1030
Date Received: 06/20/2009 0748

8260B Volatile Organic Compounds (GC/MS)

Method: 8260B
Preparation: 5030B
Dilution: 1.0
Date Analyzed: 06/22/2009 1416
Date Prepared: 06/22/2009 1416

Analysis Batch: 220-28342

Instrument ID: HP 5890/5971 GC/MS
Lab File ID: L5665.D
Initial Weight/Volume: 5 mL
Final Weight/Volume: 5 mL

Analyte	Result (ug/L)	Qualifier	MDL	RL
Acetone	16	*	1.0	10
Benzene	5.0	U	0.74	5.0
Bromodichloromethane	5.0	U	0.48	5.0
Bromoform	5.0	U	0.46	5.0
Bromomethane	5.0	U	2.1	5.0
Methyl Ethyl Ketone	10	U *	1.1	10
Carbon disulfide	5.0	U	0.90	5.0
Carbon tetrachloride	5.0	U	1.1	5.0
Chlorobenzene	5.0	U	0.72	5.0
Chloroethane	5.0	U	1.1	5.0
Chloroform	5.0	U	0.67	5.0
Chloromethane	5.0	U	1.1	5.0
Dibromochloromethane	5.0	U	0.55	5.0
1,1-Dichloroethane	5.0	U	1.0	5.0
1,2-Dichloroethane	5.0	U	0.72	5.0
1,1-Dichloroethene	5.0	U	0.83	5.0
1,2-Dichloropropane	5.0	U	0.71	5.0
cis-1,3-Dichloropropene	5.0	U	0.28	5.0
trans-1,3-Dichloropropene	5.0	U	0.57	5.0
Ethylbenzene	5.0	U	0.87	5.0
2-Hexanone	10	U	1.1	10
Methylene Chloride	5.0	U	0.78	5.0
methyl isobutyl ketone	10	U	0.38	10
Styrene	5.0	U	0.64	5.0
1,1,2,2-Tetrachloroethane	5.0	U	0.81	5.0
Tetrachloroethene	5.0	U	0.81	5.0
Toluene	5.0	U	0.72	5.0
1,1,1-Trichloroethane	5.0	U	0.69	5.0
1,1,2-Trichloroethane	5.0	U	0.65	5.0
Trichloroethene	5.0	U	0.62	5.0
Vinyl chloride	5.0	U	0.99	5.0
Xylenes, Total	5.0	U	2.3	5.0
cis-1,2-Dichloroethene	5.0	U	0.99	5.0
trans-1,2-Dichloroethene	5.0	U	0.76	5.0

Surrogate	%Rec	Acceptance Limits
1,2-Dichloroethane-d4 (Surr)	113	65 - 136
4-Bromofluorobenzene	115	51 - 142
Dibromofluoromethane	112	68 - 132
Toluene-d8 (Surr)	117	63 - 127

Client: STV Incorporated

Job Number: 220-9412-1
Sdg Number: 220-9412

Client Sample ID: W-EXC

Lab Sample ID: 220-9412-2
Client Matrix: Water

Date Sampled: 06/19/2009 1000
Date Received: 06/20/2009 0748

8260B Volatile Organic Compounds (GC/MS)

Method: 8260B
Preparation: 5030B
Dilution: 1.0
Date Analyzed: 06/22/2009 1352
Date Prepared: 06/22/2009 1352

Analysis Batch: 220-28342

Instrument ID: HP 5890/5971 GC/MS
Lab File ID: L5664.D
Initial Weight/Volume: 5 mL
Final Weight/Volume: 5 mL

Analyte	Result (ug/L)	Qualifier	MDL	RL
Acetone	6.2	J *	1.0	10
Benzene	5.0	U	0.74	5.0
Bromodichloromethane	5.0	U	0.48	5.0
Bromoform	5.0	U	0.46	5.0
Bromomethane	5.0	U	2.1	5.0
Methyl Ethyl Ketone	10	U *	1.1	10
Carbon disulfide	5.0	U	0.90	5.0
Carbon tetrachloride	5.0	U	1.1	5.0
Chlorobenzene	5.0	U	0.72	5.0
Chloroethane	5.0	U	1.1	5.0
Chloroform	5.0	U	0.67	5.0
Chloromethane	5.0	U	1.1	5.0
Dibromochloromethane	5.0	U	0.55	5.0
1,1-Dichloroethane	5.0	U	1.0	5.0
1,2-Dichloroethane	5.0	U	0.72	5.0
1,1-Dichloroethene	5.0	U	0.83	5.0
1,2-Dichloropropane	5.0	U	0.71	5.0
cis-1,3-Dichloropropene	5.0	U	0.28	5.0
trans-1,3-Dichloropropene	5.0	U	0.57	5.0
Ethylbenzene	5.0	U	0.87	5.0
2-Hexanone	10	U	1.1	10
Methylene Chloride	5.0	U	0.78	5.0
methyl isobutyl ketone	10	U	0.38	10
Styrene	5.0	U	0.64	5.0
1,1,2,2-Tetrachloroethane	5.0	U	0.81	5.0
Tetrachloroethene	5.0	U	0.81	5.0
Toluene	5.0	U	0.72	5.0
1,1,1-Trichloroethane	5.0	U	0.69	5.0
1,1,2-Trichloroethane	5.0	U	0.65	5.0
Trichloroethene	5.0	U	0.62	5.0
Vinyl chloride	5.0	U	0.99	5.0
Xylenes, Total	5.0	U	2.3	5.0
cis-1,2-Dichloroethene	5.0	U	0.99	5.0
trans-1,2-Dichloroethene	5.0	U	0.76	5.0

Surrogate	%Rec	Acceptance Limits
1,2-Dichloroethane-d4 (Surr)	113	65 - 136
4-Bromofluorobenzene	119	51 - 142
Dibromofluoromethane	114	68 - 132
Toluene-d8 (Surr)	115	63 - 127

Client: STV Incorporated

Job Number: 220-9412-1
Sdg Number: 220-9412

Client Sample ID: **S-1**

Lab Sample ID: 220-9412-3
Client Matrix: Solid

Date Sampled: 06/19/2009 1045
Date Received: 06/20/2009 0748

8260B Volatile Organic Compounds (GC/MS)-TCLP

Method: 8260B
Preparation: 5030B
Dilution: 1.0
Date Analyzed: 06/23/2009 1311
Date Prepared: 06/23/2009 1311
Date Leached: 06/22/2009 1032

Analysis Batch: 220-28395
Leachate Batch: 220-28315

Instrument ID: HP 6890/5973 GC/MS
Lab File ID: W6282.D
Initial Weight/Volume: 5 mL
Final Weight/Volume: 5 mL

Analyte	DryWt Corrected: N	Result (mg/L)	Qualifier	MDL	RL
Vinyl chloride		0.0050	U	0.00098	0.0050
1,1-Dichloroethene		0.0050	U	0.00083	0.0050
Methyl Ethyl Ketone		0.0084	J B	0.0011	0.010
Chloroform		0.0050	U	0.00067	0.0050
Carbon tetrachloride		0.0050	U	0.0011	0.0050
Benzene		0.00082	J	0.00074	0.0050
1,2-Dichloroethane		0.0050	U	0.00072	0.0050
Trichloroethene		0.0050	U	0.00062	0.0050
Tetrachloroethene		0.0050	U	0.00081	0.0050
Chlorobenzene		0.0050	U	0.00072	0.0050

Surrogate	%Rec	Acceptance Limits
1,2-Dichloroethane-d4 (Surr)	102	65 - 136
4-Bromofluorobenzene	108	51 - 142
Dibromofluoromethane	98	68 - 132
Toluene-d8 (Surr)	104	63 - 127

Client: STV Incorporated

Job Number: 220-9412-1
Sdg Number: 220-9412

Client Sample ID: **S-1**

Lab Sample ID: 220-9412-3
Client Matrix: Solid
% Moisture: 56.4
Date Sampled: 06/19/2009 1045
Date Received: 06/20/2009 0748

8260B Volatile Organic Compounds (GC/MS)

Method: 8260B
Preparation: 5030B
Dilution: 5.0
Date Analyzed: 06/22/2009 1640
Date Prepared: 06/22/2009 1640
Analysis Batch: 220-28348
Instrument ID: HP 5890/5971A GC/MS
Lab File ID: O1277.D
Initial Weight/Volume: 5 g
Final Weight/Volume: 5 mL

Analyte	DryWt Corrected: Y Result (ug/Kg)	Qualifier	MDL	RL
Acetone	210	J *	26	230
Benzene	27	J	6.5	57
Bromodichloromethane	57	U	3.4	57
Bromoform	57	U	7.0	57
Bromomethane	57	U	24	57
Methyl Ethyl Ketone	110	U	18	110
Carbon disulfide	11	J	4.7	57
Carbon tetrachloride	57	U	11	57
Chlorobenzene	57	U	6.8	57
Chloroethane	57	U	11	57
Chloroform	57	U	3.9	57
Chloromethane	57	U	8.9	57
Dibromochloromethane	57	U	4.0	57
1,1-Dichloroethane	57	U	3.4	57
1,2-Dichloroethane	57	U	6.6	57
1,1-Dichloroethene	57	U	6.6	57
1,2-Dichloropropane	57	U	7.7	57
cis-1,3-Dichloropropene	57	U	6.4	57
trans-1,3-Dichloropropene	57	U	3.1	57
Ethylbenzene	50	J	8.0	57
2-Hexanone	110	U	14	110
Methylene Chloride	100	J B	12	230
methyl isobutyl ketone	57	U	6.3	57
Styrene	57	U	1.7	57
1,1,2,2-Tetrachloroethane	390		6.0	57
Tetrachloroethene	57	U	9.3	57
Toluene	57	U	0.85	57
1,1,1-Trichloroethane	57	U	6.1	57
1,1,2-Trichloroethane	57	U	4.2	57
Trichloroethene	57	U	9.3	57
Vinyl chloride	57	U	2.6	57
Xylenes, Total	300		5.6	57
cis-1,2-Dichloroethene	57	U	4.2	57
trans-1,2-Dichloroethene	57	U	4.5	57

Surrogate	%Rec		Acceptance Limits
1,2-Dichloroethane-d4 (Surr)	73		59 - 132
4-Bromofluorobenzene	102		34 - 124
Dibromofluoromethane	64		59 - 123
Toluene-d8 (Surr)	43	*	50 - 118

Client: STV Incorporated

Job Number: 220-9412-1
Sdg Number: 220-9412

Client Sample ID: **S-2**

Lab Sample ID: 220-9412-4
Client Matrix: Solid

Date Sampled: 06/19/2009 1115
Date Received: 06/20/2009 0748

8260B Volatile Organic Compounds (GC/MS)-TCLP

Method: 8260B
Preparation: 5030B
Dilution: 1.0
Date Analyzed: 06/23/2009 1335
Date Prepared: 06/23/2009 1335
Date Leached: 06/22/2009 1032

Analysis Batch: 220-28395
Leachate Batch: 220-28315

Instrument ID: HP 6890/5973 GC/MS
Lab File ID: W6283.D
Initial Weight/Volume: 5 mL
Final Weight/Volume: 5 mL

Analyte	DryWt Corrected: N	Result (mg/L)	Qualifier	MDL	RL
Vinyl chloride		0.0050	U	0.00098	0.0050
1,1-Dichloroethene		0.0050	U	0.00083	0.0050
Methyl Ethyl Ketone		0.0085	J B	0.0011	0.010
Chloroform		0.0050	U	0.00067	0.0050
Carbon tetrachloride		0.0050	U	0.0011	0.0050
Benzene		0.0018	J	0.00074	0.0050
1,2-Dichloroethane		0.0050	U	0.00072	0.0050
Trichloroethene		0.0050	U	0.00062	0.0050
Tetrachloroethene		0.0050	U	0.00081	0.0050
Chlorobenzene		0.0050	U	0.00072	0.0050

Surrogate	%Rec	Acceptance Limits
1,2-Dichloroethane-d4 (Surr)	102	65 - 136
4-Bromofluorobenzene	108	51 - 142
Dibromofluoromethane	96	68 - 132
Toluene-d8 (Surr)	104	63 - 127

Client: STV Incorporated

Job Number: 220-9412-1
Sdg Number: 220-9412

Client Sample ID: **S-2**

Lab Sample ID: 220-9412-4
Client Matrix: Solid
% Moisture: 53.7
Date Sampled: 06/19/2009 1115
Date Received: 06/20/2009 0748

8260B Volatile Organic Compounds (GC/MS)

Method: 8260B
Preparation: 5030B
Dilution: 5.0
Date Analyzed: 06/22/2009 1705
Date Prepared: 06/22/2009 1705
Analysis Batch: 220-28348
Instrument ID: HP 5890/5971A GC/MS
Lab File ID: O1278.D
Initial Weight/Volume: 5 g
Final Weight/Volume: 5 mL

Analyte	DryWt Corrected: Y	Result (ug/Kg)	Qualifier	MDL	RL
Acetone		340	*	24	220
Benzene		10	J	6.2	54
Bromodichloromethane		54	U	3.2	54
Bromoform		54	U	6.6	54
Bromomethane		54	U	22	54
Methyl Ethyl Ketone		110	U	17	110
Carbon disulfide		20	J	4.4	54
Carbon tetrachloride		54	U	10	54
Chlorobenzene		54	U	6.4	54
Chloroethane		54	U	11	54
Chloroform		54	U	3.7	54
Chloromethane		54	U	8.4	54
Dibromochloromethane		54	U	3.8	54
1,1-Dichloroethane		54	U	3.2	54
1,2-Dichloroethane		54	U	6.3	54
1,1-Dichloroethene		54	U	6.3	54
1,2-Dichloropropane		54	U	7.2	54
cis-1,3-Dichloropropene		54	U	6.0	54
trans-1,3-Dichloropropene		54	U	2.9	54
Ethylbenzene		19	J	7.6	54
2-Hexanone		110	U	13	110
Methylene Chloride		98	J B	12	220
methyl isobutyl ketone		54	U	5.9	54
Styrene		54	U	1.6	54
1,1,2,2-Tetrachloroethane		54	U	5.6	54
Tetrachloroethene		54	U	8.7	54
Toluene		2.4	J B	0.80	54
1,1,1-Trichloroethane		54	U	5.7	54
1,1,2-Trichloroethane		54	U	4.0	54
Trichloroethene		54	U	8.7	54
Vinyl chloride		54	U	2.5	54
Xylenes, Total		90		5.2	54
cis-1,2-Dichloroethene		54	U	4.0	54
trans-1,2-Dichloroethene		54	U	4.2	54

Surrogate	%Rec	Acceptance Limits
1,2-Dichloroethane-d4 (Surr)	76	59 - 132
4-Bromofluorobenzene	91	34 - 124
Dibromofluoromethane	73	59 - 123
Toluene-d8 (Surr)	65	50 - 118

Client: STV Incorporated

Job Number: 220-9412-1
Sdg Number: 220-9412

Client Sample ID: **W-TANK**

Lab Sample ID: 220-9412-1
Client Matrix: Water

Date Sampled: 06/19/2009 1030
Date Received: 06/20/2009 0748

8270C Semivolatile Compounds by Gas Chromatography/Mass Spectrometry (GC/MS)

Method: 8270C
Preparation: 3510C
Dilution: 4.0
Date Analyzed: 06/22/2009 1226
Date Prepared: 06/20/2009 1317

Analysis Batch: 220-28334
Prep Batch: 220-28305

Instrument ID: HP 6890/5975
Lab File ID: A5735.D
Initial Weight/Volume: 960 mL
Final Weight/Volume: 1 mL
Injection Volume: 1.0 uL

Analyte	Result (ug/L)	Qualifier	MDL	RL
Acenaphthene	3.6	J	1.3	17
Acenaphthylene	2.2	J	1.4	17
Anthracene	5.4	J	1.2	17
Benzo[a]anthracene	8.6	J	1.2	17
Benzo[a]pyrene	5.3	J	1.5	17
Benzo[b]fluoranthene	4.4	J	1.5	17
Benzo[g,h,i]perylene	6.5	J	1.5	17
Benzo[k]fluoranthene	1.7	J	1.7	17
Bis(2-chloroethoxy)methane	17	U	1.3	17
Bis(2-chloroethyl)ether	17	U	1.2	17
Bis(2-ethylhexyl) phthalate	290		2.3	17
Butyl benzyl phthalate	17	U	1.5	17
Carbazole	17	U	1.4	17
Chrysene	8.3	J	1.0	17
Di-n-butyl phthalate	17	U	1.5	17
Di-n-octyl phthalate	17	U	1.6	17
4-Bromophenyl phenyl ether	17	U	1.8	17
4-Chloroaniline	17	U	1.2	17
2-Chloronaphthalene	17	U	1.6	17
4-Chlorophenyl phenyl ether	17	U	1.5	17
Dibenz(a,h)anthracene	3.1	J	1.6	17
Dibenzofuran	2.1	J	1.8	17
Diethyl phthalate	17	U	1.8	17
Dimethyl phthalate	17	U	1.6	17
1,2-Dichlorobenzene	17	U	1.3	17
1,3-Dichlorobenzene	17	U	1.0	17
1,4-Dichlorobenzene	17	U	1.3	17
3,3'-Dichlorobenzidine	17	U	1.5	17
2,4-Dinitrotoluene	17	U	1.7	17
2,6-Dinitrotoluene	17	U	1.1	17
Fluoranthene	17		1.3	17
Fluorene	3.5	J	1.1	17
Hexachlorobenzene	17	U	1.4	17
Hexachlorobutadiene	17	U	0.83	17
Hexachlorocyclopentadiene	17	U	1.5	17
Hexachloroethane	17	U	1.5	17
Indeno[1,2,3-cd]pyrene	4.0	J	1.2	17
Isophorone	17	U	1.3	17
2-Methylnaphthalene	2.5	J	1.1	17
Naphthalene	1.9	J	1.2	17
2-Nitroaniline	17	U	1.4	17
3-Nitroaniline	17	U	0.96	17
Nitrobenzene	17	U	1.2	17
N-Nitrosodi-n-propylamine	17	U	1.4	17

Client: STV Incorporated

Job Number: 220-9412-1
Sdg Number: 220-9412

Client Sample ID: **W-TANK**

Lab Sample ID: 220-9412-1
Client Matrix: Water

Date Sampled: 06/19/2009 1030
Date Received: 06/20/2009 0748

8270C Semivolatile Compounds by Gas Chromatography/Mass Spectrometry (GC/MS)

Method: 8270C
Preparation: 3510C
Dilution: 4.0
Date Analyzed: 06/22/2009 1226
Date Prepared: 06/20/2009 1317

Analysis Batch: 220-28334
Prep Batch: 220-28305

Instrument ID: HP 6890/5975
Lab File ID: A5735.D
Initial Weight/Volume: 960 mL
Final Weight/Volume: 1 mL
Injection Volume: 1.0 uL

Analyte	Result (ug/L)	Qualifier	MDL	RL
N-Nitrosodiphenylamine	17	U	1.4	17
Phenanthrene	13	J	1.2	17
Pyrene	19		1.4	17
1,2,4-Trichlorobenzene	17	U	1.5	17
4-Chloro-3-methylphenol	21	U	1.4	21
2-Chlorophenol	17	U	0.96	17
2-Methylphenol	17	U	1.0	17
4-Methylphenol	17	U	1.2	17
2,4-Dichlorophenol	17	U	1.4	17
2,4-Dimethylphenol	17	U	1.4	17
2,4-Dinitrophenol	100	U	1.8	100
4,6-Dinitro-2-methylphenol	100	U	7.8	100
2-Nitrophenol	17	U	1.1	17
4-Nitrophenol	42	U	6.0	42
Pentachlorophenol	100	U	1.3	100
Phenol	17	U	0.79	17
2,4,5-Trichlorophenol	42	U	1.2	42
2,4,6-Trichlorophenol	17	U	1.5	17
Benzyl alcohol	17	U	1.7	17
4-Nitroaniline	17	U	0.83	17
2,2'-oxybis[1-chloropropane]	17	U	1.0	17

Surrogate	%Rec	Acceptance Limits
2-Fluorobiphenyl	87	39 - 120
2-Fluorophenol	43	13 - 120
2,4,6-Tribromophenol	76	36 - 120
Nitrobenzene-d5	79	40 - 120
Phenol-d5	35	10 - 120
Terphenyl-d14	68	10 - 120

Client: STV Incorporated

Job Number: 220-9412-1
Sdg Number: 220-9412

Client Sample ID: **W-EXC**

Lab Sample ID: 220-9412-2
Client Matrix: Water

Date Sampled: 06/19/2009 1000
Date Received: 06/20/2009 0748

8270C Semivolatile Compounds by Gas Chromatography/Mass Spectrometry (GC/MS)

Method: 8270C
Preparation: 3510C
Dilution: 1.0
Date Analyzed: 06/22/2009 1107
Date Prepared: 06/20/2009 1317

Analysis Batch: 220-28334
Prep Batch: 220-28305

Instrument ID: HP 6890/5975
Lab File ID: A5732.D
Initial Weight/Volume: 970 mL
Final Weight/Volume: 1 mL
Injection Volume: 1.0 uL

Analyte	Result (ug/L)	Qualifier	MDL	RL
Acenaphthene	0.66	J	0.32	4.1
Acenaphthylene	4.1	U	0.35	4.1
Anthracene	0.56	J	0.30	4.1
Benzo[a]anthracene	0.74	J	0.31	4.1
Benzo[a]pyrene	0.60	J	0.36	4.1
Benzo[b]fluoranthene	0.52	J	0.37	4.1
Benzo[g,h,i]perylene	1.6	J	0.37	4.1
Benzo[k]fluoranthene	4.1	U	0.41	4.1
Bis(2-chloroethoxy)methane	4.1	U	0.32	4.1
Bis(2-chloroethyl)ether	4.1	U	0.30	4.1
Bis(2-ethylhexyl) phthalate	17		0.56	4.1
Butyl benzyl phthalate	4.1	U	0.36	4.1
Carbazole	4.1	U	0.34	4.1
Chrysene	0.66	J	0.26	4.1
Di-n-butyl phthalate	0.40	J	0.36	4.1
Di-n-octyl phthalate	4.1	U	0.39	4.1
4-Bromophenyl phenyl ether	4.1	U	0.45	4.1
4-Chloroaniline	4.1	U	0.30	4.1
2-Chloronaphthalene	4.1	U	0.40	4.1
4-Chlorophenyl phenyl ether	4.1	U	0.36	4.1
Dibenz(a,h)anthracene	4.1	U	0.39	4.1
Dibenzofuran	4.1	U	0.44	4.1
Diethyl phthalate	4.1	U	0.44	4.1
Dimethyl phthalate	4.1	U	0.39	4.1
1,2-Dichlorobenzene	4.1	U	0.32	4.1
1,3-Dichlorobenzene	4.1	U	0.26	4.1
1,4-Dichlorobenzene	4.1	U	0.32	4.1
3,3'-Dichlorobenzidine	4.1	U	0.37	4.1
2,4-Dinitrotoluene	4.1	U	0.41	4.1
2,6-Dinitrotoluene	4.1	U	0.27	4.1
Fluoranthene	1.7	J	0.32	4.1
Fluorene	0.57	J	0.27	4.1
Hexachlorobenzene	4.1	U	0.34	4.1
Hexachlorobutadiene	4.1	U	0.21	4.1
Hexachlorocyclopentadiene	4.1	U	0.36	4.1
Hexachloroethane	4.1	U	0.38	4.1
Indeno[1,2,3-cd]pyrene	0.92	J	0.29	4.1
Isophorone	4.1	U	0.32	4.1
2-Methylnaphthalene	4.1	U	0.28	4.1
Naphthalene	0.38	J	0.31	4.1
2-Nitroaniline	4.1	U	0.35	4.1
3-Nitroaniline	4.1	U	0.24	4.1
Nitrobenzene	4.1	U	0.29	4.1
N-Nitrosodi-n-propylamine	4.1	U	0.34	4.1

Client: STV Incorporated

Job Number: 220-9412-1
Sdg Number: 220-9412

Client Sample ID: **W-EXC**

Lab Sample ID: 220-9412-2
Client Matrix: Water

Date Sampled: 06/19/2009 1000
Date Received: 06/20/2009 0748

8270C Semivolatile Compounds by Gas Chromatography/Mass Spectrometry (GC/MS)

Method: 8270C
Preparation: 3510C
Dilution: 1.0
Date Analyzed: 06/22/2009 1107
Date Prepared: 06/20/2009 1317

Analysis Batch: 220-28334
Prep Batch: 220-28305

Instrument ID: HP 6890/5975
Lab File ID: A5732.D
Initial Weight/Volume: 970 mL
Final Weight/Volume: 1 mL
Injection Volume: 1.0 uL

Analyte	Result (ug/L)	Qualifier	MDL	RL
N-Nitrosodiphenylamine	4.1	U	0.34	4.1
Phenanthrene	1.4	J	0.29	4.1
Pyrene	2.2	J	0.34	4.1
1,2,4-Trichlorobenzene	4.1	U	0.37	4.1
4-Chloro-3-methylphenol	5.2	U	0.35	5.2
2-Chlorophenol	4.1	U	0.24	4.1
2-Methylphenol	4.1	U	0.25	4.1
4-Methylphenol	4.1	U	0.30	4.1
2,4-Dichlorophenol	4.1	U	0.34	4.1
2,4-Dimethylphenol	4.1	U	0.34	4.1
2,4-Dinitrophenol	26	U	0.44	26
4,6-Dinitro-2-methylphenol	26	U	1.9	26
2-Nitrophenol	4.1	U	0.28	4.1
4-Nitrophenol	10	U	1.5	10
Pentachlorophenol	26	U	0.32	26
Phenol	4.1	U	0.20	4.1
2,4,5-Trichlorophenol	10	U	0.29	10
2,4,6-Trichlorophenol	4.1	U	0.38	4.1
Benzyl alcohol	4.1	U	0.42	4.1
4-Nitroaniline	4.1	U	0.21	4.1
2,2'-oxybis[1-chloropropane]	4.1	U	0.26	4.1

Surrogate	%Rec	Acceptance Limits
2-Fluorobiphenyl	73	39 - 120
2-Fluorophenol	37	13 - 120
2,4,6-Tribromophenol	66	36 - 120
Nitrobenzene-d5	71	40 - 120
Phenol-d5	29	10 - 120
Terphenyl-d14	72	10 - 120

Client: STV Incorporated

Job Number: 220-9412-1
Sdg Number: 220-9412

Client Sample ID: **S-1**

Lab Sample ID: 220-9412-3
Client Matrix: Solid

Date Sampled: 06/19/2009 1045
Date Received: 06/20/2009 0748

8270C Semivolatile Compounds by Gas Chromatography/Mass Spectrometry (GC/MS)-TCLP

Method: 8270C
Preparation: 3510C
Dilution: 1.0
Date Analyzed: 06/24/2009 1523
Date Prepared: 06/24/2009 0907
Date Leached: 06/22/2009 1600

Analysis Batch: 220-28470
Prep Batch: 220-28419
Leachate Batch: 220-28369

Instrument ID: HP 6890/5975
Lab File ID: A5794.D
Initial Weight/Volume: 250 mL
Final Weight/Volume: 0.5 mL
Injection Volume: 1.0 uL

Analyte	DryWt Corrected: N	Result (mg/L)	Qualifier	MDL	RL
1,4-Dichlorobenzene		0.020	U	0.00062	0.020
2,4-Dinitrotoluene		0.020	U	0.00080	0.020
2,4,5-Trichlorophenol		0.10	U	0.00056	0.10
2,4,6-Trichlorophenol		0.020	U	0.00074	0.020
2-Methylphenol		0.020	U	0.00048	0.020
Hexachlorobenzene		0.020	U	0.00066	0.020
Hexachlorobutadiene		0.020	U	0.00040	0.020
Hexachloroethane		0.020	U	0.00074	0.020
Nitrobenzene		0.020	U	0.00056	0.020
Pentachlorophenol		0.10	U	0.00062	0.10
Pyridine		0.040	U	0.0077	0.040
4-Methylphenol		0.020	U	0.00058	0.020

Surrogate	%Rec	Acceptance Limits
2,4,6-Tribromophenol	86	29 - 126
2-Fluorobiphenyl	64	43 - 116
2-Fluorophenol	60	21 - 97
Nitrobenzene-d5	68	38 - 113
Terphenyl-d14	92	10 - 119
Phenol-d5	57	18 - 97

Client: STV Incorporated

Job Number: 220-9412-1
Sdg Number: 220-9412

Client Sample ID: **S-1**

Lab Sample ID: 220-9412-3
Client Matrix: Solid
% Moisture: 56.4
Date Sampled: 06/19/2009 1045
Date Received: 06/20/2009 0748

8270C Semivolatile Compounds by Gas Chromatography/Mass Spectrometry (GC/MS)

Method: 8270C
Preparation: 3541
Dilution: 20
Date Analyzed: 06/23/2009 1228
Date Prepared: 06/20/2009 1110
Analysis Batch: 220-28390
Prep Batch: 220-28293
Instrument ID: HP 6890/5973 GC/MS
Lab File ID: Z11432.D
Initial Weight/Volume: 15.19 g
Final Weight/Volume: 1 mL
Injection Volume: 1.0 uL

Analyte	DryWt Corrected: Y	Result (ug/Kg)	Qualifier	MDL	RL
Acenaphthene		2000	J	720	12000
Acenaphthylene		12000	U	600	12000
Anthracene		5000	J	480	12000
Benzo[a]anthracene		6200	J	430	12000
Benzo[a]pyrene		6400	J	330	12000
Benzo[b]fluoranthene		5000	J	330	12000
Benzo[g,h,i]perylene		11000	J	800	12000
Benzo[k]fluoranthene		1900	J	1100	12000
Bis(2-chloroethoxy)methane		12000	U	570	12000
Bis(2-chloroethyl)ether		12000	U	630	12000
Bis(2-ethylhexyl) phthalate		130000		1200	12000
Butyl benzyl phthalate		12000	U	680	12000
Carbazole		12000	U	680	12000
Chrysene		6900	J	900	12000
Di-n-butyl phthalate		12000	U	1800	12000
Di-n-octyl phthalate		12000	U	690	12000
4-Bromophenyl phenyl ether		12000	U	790	12000
4-Chloroaniline		12000	U	2000	12000
2-Chloronaphthalene		12000	U	520	12000
4-Chlorophenyl phenyl ether		12000	U	900	12000
Dibenz(a,h)anthracene		11000	J	960	12000
Dibenzofuran		1500	J	860	12000
Diethyl phthalate		12000	U	1200	12000
Dimethyl phthalate		12000	U	700	12000
1,2-Dichlorobenzene		12000	U	720	12000
1,3-Dichlorobenzene		12000	U	610	12000
1,4-Dichlorobenzene		12000	U	720	12000
3,3'-Dichlorobenzidine		30000	U	2500	30000
2,4-Dinitrotoluene		12000	U	970	12000
2,6-Dinitrotoluene		12000	U	360	12000
Fluoranthene		12000	J	610	12000
Fluorene		2800	J	730	12000
Hexachlorobenzene		12000	U	850	12000
Hexachlorobutadiene		12000	U	940	12000
Hexachlorocyclopentadiene		30000	U	5700	30000
Hexachloroethane		12000	U	700	12000
Indeno[1,2,3-cd]pyrene		14000		790	12000
Isophorone		12000	U	670	12000
2-Methylnaphthalene		6000	J	350	12000
Naphthalene		3300	J	630	12000
2-Nitroaniline		77000	U	740	77000
3-Nitroaniline		77000	U	390	77000
Nitrobenzene		12000	U	780	12000
N-Nitrosodi-n-propylamine		12000	U	820	12000

Client: STV Incorporated

Job Number: 220-9412-1
Sdg Number: 220-9412

Client Sample ID: **S-1**

Lab Sample ID: 220-9412-3
Client Matrix: Solid
% Moisture: 56.4
Date Sampled: 06/19/2009 1045
Date Received: 06/20/2009 0748

8270C Semivolatile Compounds by Gas Chromatography/Mass Spectrometry (GC/MS)

Method: 8270C
Preparation: 3541
Dilution: 20
Date Analyzed: 06/23/2009 1228
Date Prepared: 06/20/2009 1110
Analysis Batch: 220-28390
Prep Batch: 220-28293
Instrument ID: HP 6890/5973 GC/MS
Lab File ID: Z11432.D
Initial Weight/Volume: 15.19 g
Final Weight/Volume: 1 mL
Injection Volume: 1.0 uL

Analyte	DryWt Corrected: Y	Result (ug/Kg)	Qualifier	MDL	RL
N-Nitrosodiphenylamine		12000	U	690	12000
Phenanthrene		14000		600	12000
Pyrene		19000		570	12000
1,2,4-Trichlorobenzene		12000	U	800	12000
4-Chloro-3-methylphenol		12000	U	500	12000
2-Chlorophenol		12000	U	710	12000
2-Methylphenol		12000	U	730	12000
4-Methylphenol		12000	U	800	12000
2,4-Dichlorophenol		12000	U	650	12000
2,4-Dimethylphenol		12000	U	590	12000
2,4-Dinitrophenol		77000	U *	3700	77000
4,6-Dinitro-2-methylphenol		77000	U *	5200	77000
2-Nitrophenol		12000	U	770	12000
4-Nitrophenol		77000	U	920	77000
Pentachlorophenol		77000	U	7400	77000
Phenol		12000	U	810	12000
2,4,5-Trichlorophenol		77000	U	620	77000
2,4,6-Trichlorophenol		12000	U	330	12000
Benzyl alcohol		12000	U	1200	12000
4-Nitroaniline		12000	U	940	12000
2,2'-oxybis[1-chloropropane]		12000	U	630	12000

Surrogate	%Rec	Acceptance Limits
2-Fluorobiphenyl	92	41 - 120
2-Fluorophenol	80	34 - 120
2,4,6-Tribromophenol	94	37 - 120
Nitrobenzene-d5	93	38 - 120
Phenol-d5	95	36 - 120
Terphenyl-d14	87	32 - 125

Client: STV Incorporated

Job Number: 220-9412-1
Sdg Number: 220-9412

Client Sample ID: **S-2**

Lab Sample ID: 220-9412-4
Client Matrix: Solid

Date Sampled: 06/19/2009 1115
Date Received: 06/20/2009 0748

8270C Semivolatile Compounds by Gas Chromatography/Mass Spectrometry (GC/MS)-TCLP

Method: 8270C
Preparation: 3510C
Dilution: 1.0
Date Analyzed: 06/24/2009 1549
Date Prepared: 06/24/2009 0907
Date Leached: 06/22/2009 1600

Analysis Batch: 220-28470
Prep Batch: 220-28419
Leachate Batch: 220-28369

Instrument ID: HP 6890/5975
Lab File ID: A5795.D
Initial Weight/Volume: 250 mL
Final Weight/Volume: 0.5 mL
Injection Volume: 1.0 uL

Analyte	DryWt Corrected: N	Result (mg/L)	Qualifier	MDL	RL
1,4-Dichlorobenzene		0.020	U	0.00062	0.020
2,4-Dinitrotoluene		0.020	U	0.00080	0.020
2,4,5-Trichlorophenol		0.10	U	0.00056	0.10
2,4,6-Trichlorophenol		0.020	U	0.00074	0.020
2-Methylphenol		0.020	U	0.00048	0.020
Hexachlorobenzene		0.020	U	0.00066	0.020
Hexachlorobutadiene		0.020	U	0.00040	0.020
Hexachloroethane		0.020	U	0.00074	0.020
Nitrobenzene		0.020	U	0.00056	0.020
Pentachlorophenol		0.10	U	0.00062	0.10
Pyridine		0.040	U	0.0077	0.040
4-Methylphenol		0.020	U	0.00058	0.020

Surrogate	%Rec	Acceptance Limits
2,4,6-Tribromophenol	85	29 - 126
2-Fluorobiphenyl	60	43 - 116
2-Fluorophenol	54	21 - 97
Nitrobenzene-d5	64	38 - 113
Terphenyl-d14	88	10 - 119
Phenol-d5	52	18 - 97

Client: STV Incorporated

Job Number: 220-9412-1
Sdg Number: 220-9412

Client Sample ID: S-2

Lab Sample ID: 220-9412-4
Client Matrix: Solid
% Moisture: 53.7
Date Sampled: 06/19/2009 1115
Date Received: 06/20/2009 0748

8270C Semivolatile Compounds by Gas Chromatography/Mass Spectrometry (GC/MS)

Method: 8270C
Preparation: 3541
Dilution: 20
Date Analyzed: 06/23/2009 1255
Date Prepared: 06/22/2009 1437
Analysis Batch: 220-28390
Prep Batch: 220-28343
Instrument ID: HP 6890/5973 GC/MS
Lab File ID: Z11433.D
Initial Weight/Volume: 15.18 g
Final Weight/Volume: 1 mL
Injection Volume: 1.0 uL

Analyte	DryWt Corrected: Y	Result (ug/Kg)	Qualifier	MDL	RL
Acenaphthene		2400	J	680	12000
Acenaphthylene		2100	J	560	12000
Anthracene		7500	J	450	12000
Benzo[a]anthracene		8900	J	410	12000
Benzo[a]pyrene		7200	J	310	12000
Benzo[b]fluoranthene		5300	J	310	12000
Benzo[g,h,i]perylene		11000	J	750	12000
Benzo[k]fluoranthene		1800	J	1000	12000
Bis(2-chloroethoxy)methane		12000	U	530	12000
Bis(2-chloroethyl)ether		12000	U	600	12000
Bis(2-ethylhexyl) phthalate		110000		1100	12000
Butyl benzyl phthalate		12000	U	640	12000
Carbazole		12000	U	640	12000
Chrysene		9200	J	850	12000
Di-n-butyl phthalate		12000	U	1700	12000
Di-n-octyl phthalate		12000	U	650	12000
4-Bromophenyl phenyl ether		12000	U	740	12000
4-Chloroaniline		12000	U	1900	12000
2-Chloronaphthalene		12000	U	490	12000
4-Chlorophenyl phenyl ether		12000	U	850	12000
Dibenz(a,h)anthracene		11000	J	910	12000
Dibenzofuran		1400	J	810	12000
Diethyl phthalate		12000	U	1200	12000
Dimethyl phthalate		12000	U	660	12000
1,2-Dichlorobenzene		12000	U	680	12000
1,3-Dichlorobenzene		12000	U	580	12000
1,4-Dichlorobenzene		12000	U	680	12000
3,3'-Dichlorobenzidine		29000	U	2400	29000
2,4-Dinitrotoluene		12000	U	920	12000
2,6-Dinitrotoluene		12000	U	340	12000
Fluoranthene		15000		570	12000
Fluorene		1700	J	690	12000
Hexachlorobenzene		12000	U	800	12000
Hexachlorobutadiene		12000	U	890	12000
Hexachlorocyclopentadiene		29000	U	5400	29000
Hexachloroethane		12000	U	660	12000
Indeno[1,2,3-cd]pyrene		14000		750	12000
Isophorone		12000	U	640	12000
2-Methylnaphthalene		2200	J	330	12000
Naphthalene		2900	J	600	12000
2-Nitroaniline		73000	U	700	73000
3-Nitroaniline		73000	U	370	73000
Nitrobenzene		12000	U	730	12000
N-Nitrosodi-n-propylamine		12000	U	780	12000

Client: STV Incorporated

Job Number: 220-9412-1
Sdg Number: 220-9412

Client Sample ID: **S-2**

Lab Sample ID: 220-9412-4
Client Matrix: Solid
% Moisture: 53.7
Date Sampled: 06/19/2009 1115
Date Received: 06/20/2009 0748

8270C Semivolatile Compounds by Gas Chromatography/Mass Spectrometry (GC/MS)

Method: 8270C
Preparation: 3541
Dilution: 20
Date Analyzed: 06/23/2009 1255
Date Prepared: 06/22/2009 1437
Analysis Batch: 220-28390
Prep Batch: 220-28343
Instrument ID: HP 6890/5973 GC/MS
Lab File ID: Z11433.D
Initial Weight/Volume: 15.18 g
Final Weight/Volume: 1 mL
Injection Volume: 1.0 uL

Analyte	DryWt Corrected: Y	Result (ug/Kg)	Qualifier	MDL	RL
N-Nitrosodiphenylamine		12000	U	650	12000
Phenanthrene		8700	J	570	12000
Pyrene		21000		540	12000
1,2,4-Trichlorobenzene		12000	U	760	12000
4-Chloro-3-methylphenol		12000	U	470	12000
2-Chlorophenol		12000	U	670	12000
2-Methylphenol		12000	U	690	12000
4-Methylphenol		12000	U	760	12000
2,4-Dichlorophenol		12000	U	610	12000
2,4-Dimethylphenol		12000	U	560	12000
2,4-Dinitrophenol		73000	U	3500	73000
4,6-Dinitro-2-methylphenol		73000	U	5000	73000
2-Nitrophenol		12000	U	730	12000
4-Nitrophenol		73000	U	870	73000
Pentachlorophenol		73000	U	7000	73000
Phenol		12000	U	760	12000
2,4,5-Trichlorophenol		73000	U	580	73000
2,4,6-Trichlorophenol		12000	U	320	12000
Benzyl alcohol		12000	U	1100	12000
4-Nitroaniline		12000	U	880	12000
2,2'-oxybis[1-chloropropane]		12000	U	600	12000

Surrogate	%Rec	Acceptance Limits
2-Fluorobiphenyl	75	41 - 120
2-Fluorophenol	73	34 - 120
2,4,6-Tribromophenol	83	37 - 120
Nitrobenzene-d5	67	38 - 120
Phenol-d5	74	36 - 120
Terphenyl-d14	68	32 - 125

Client: STV Incorporated

Job Number: 220-9412-1
Sdg Number: 220-9412

Client Sample ID: **W-TANK**

Lab Sample ID: 220-9412-1
Client Matrix: Water

Date Sampled: 06/19/2009 1030
Date Received: 06/20/2009 0748

8015B Gasoline Range Organics - (GC)

Method: 8015B
Preparation: 5030B
Dilution: 1.0
Date Analyzed: 06/25/2009 1843
Date Prepared: 06/25/2009 1843

Analysis Batch: 680-141418

Instrument ID: GC Volatiles - W FID1
Lab File ID: W062507.D
Initial Weight/Volume: 20 mL
Final Weight/Volume: 20 mL
Injection Volume:
Column ID: PRIMARY

Analyte	Result (mg/L)	Qualifier	MDL	RL
Gasoline Range Organics (GRO)-C6-C10	0.018	J	0.011	0.050

Surrogate	%Rec	Acceptance Limits
a,a,a-Trifluorotoluene	98	66 - 125

Client: STV Incorporated

Job Number: 220-9412-1
Sdg Number: 220-9412

Client Sample ID: **W-EXC**

Lab Sample ID: 220-9412-2
Client Matrix: Water

Date Sampled: 06/19/2009 1000
Date Received: 06/20/2009 0748

8015B Gasoline Range Organics - (GC)

Method: 8015B
Preparation: 5030B
Dilution: 1.0
Date Analyzed: 06/25/2009 1910
Date Prepared: 06/25/2009 1910

Analysis Batch: 680-141418

Instrument ID: GC Volatiles - W FID1
Lab File ID: W062508.D
Initial Weight/Volume: 20 mL
Final Weight/Volume: 20 mL
Injection Volume:
Column ID: PRIMARY

Analyte	Result (mg/L)	Qualifier	MDL	RL
Gasoline Range Organics (GRO)-C6-C10	0.050	U	0.011	0.050

Surrogate	%Rec	Acceptance Limits
a,a,a-Trifluorotoluene	100	66 - 125

Client: STV Incorporated

Job Number: 220-9412-1
Sdg Number: 220-9412

Client Sample ID: **S-1**

Lab Sample ID: 220-9412-3
Client Matrix: Solid
% Moisture: 56.4
Date Sampled: 06/19/2009 1045
Date Received: 06/20/2009 0748

8015B Gasoline Range Organics - (GC)

Method: 8015B
Preparation: 5030A
Dilution: 20
Date Analyzed: 06/25/2009 1314
Date Prepared: 06/25/2009 1314

Analysis Batch: 680-141384

Instrument ID: GC Volatiles - W FID1
Lab File ID: W062503.D
Initial Weight/Volume: 5 mL
Final Weight/Volume: 5 mL
Injection Volume:
Column ID: PRIMARY

Analyte	DryWt Corrected: Y	Result (mg/Kg)	Qualifier	MDL	RL
Gasoline Range Organics (GRO)-C6-C10		28		0.87	11

Surrogate	%Rec	Acceptance Limits
a,a,a-Trifluorotoluene	60	53 - 121

Client: STV Incorporated

Job Number: 220-9412-1
Sdg Number: 220-9412

Client Sample ID: **S-2**

Lab Sample ID: 220-9412-4
Client Matrix: Solid

% Moisture: 53.7

Date Sampled: 06/19/2009 1115
Date Received: 06/20/2009 0748

8015B Gasoline Range Organics - (GC)

Method: 8015B
Preparation: 5030A
Dilution: 20
Date Analyzed: 06/25/2009 1338
Date Prepared: 06/25/2009 1338

Analysis Batch: 680-141384

Instrument ID: GC Volatiles - W FID1
Lab File ID: W062504.D
Initial Weight/Volume: 5 mL
Final Weight/Volume: 5 mL
Injection Volume:
Column ID: PRIMARY

Analyte	DryWt Corrected: Y	Result (mg/Kg)	Qualifier	MDL	RL
Gasoline Range Organics (GRO)-C6-C10		50		0.82	11

Surrogate	%Rec	Acceptance Limits
a,a,a-Trifluorotoluene	66	53 - 121

Client: STV Incorporated

Job Number: 220-9412-1
Sdg Number: 220-9412

Client Sample ID: **W-TANK**

Lab Sample ID: 220-9412-1
Client Matrix: Water

Date Sampled: 06/19/2009 1030
Date Received: 06/20/2009 0748

8015B Diesel Range Organics (DRO) (GC)

Method: 8015B
Preparation: 3510C
Dilution: 10
Date Analyzed: 06/25/2009 0027
Date Prepared: 06/20/2009 1314

Analysis Batch: 220-28491
Prep Batch: 220-28304

Instrument ID: HP5890 with FID/NPD
Lab File ID: C2563013.d
Initial Weight/Volume: 1000 mL
Final Weight/Volume: 1 mL
Injection Volume: 1 uL
Column ID: PRIMARY

Analyte	Result (ug/L)	Qualifier	RL	RL
Diesel Range Organics [C10-C28]	11000		5000	5000

Surrogate	%Rec	Acceptance Limits
o-Terphenyl	91	24 - 132

Client: STV Incorporated

Job Number: 220-9412-1
Sdg Number: 220-9412

Client Sample ID: **W-TANK**

Lab Sample ID: 220-9412-1
Client Matrix: Water

Date Sampled: 06/19/2009 1030
Date Received: 06/20/2009 0748

8015B Hydrocarbon Product Identification (GC)

Method: 8015B
Preparation: 3510C
Dilution: 1.0
Date Analyzed: 06/22/2009 0517
Date Prepared: 06/20/2009 1314

Analysis Batch: 220-28034
Prep Batch: 220-28304

Instrument ID: HP5890 with FID/NPD
Lab File ID: C2561438.d
Initial Weight/Volume: 1000 mL
Final Weight/Volume: 1 mL
Injection Volume: 1 uL
Column ID: PRIMARY

Surrogate	%Rec	Acceptance Limits
o-Terphenyl	126	24 - 132

Client: STV Incorporated

Job Number: 220-9412-1
Sdg Number: 220-9412

Client Sample ID: **W-EXC**

Lab Sample ID: 220-9412-2
Client Matrix: Water

Date Sampled: 06/19/2009 1000
Date Received: 06/20/2009 0748

8015B Diesel Range Organics (DRO) (GC)

Method: 8015B
Preparation: 3510C
Dilution: 1.0
Date Analyzed: 06/25/2009 0054
Date Prepared: 06/20/2009 1314

Analysis Batch: 220-28491
Prep Batch: 220-28304

Instrument ID: HP5890 with FID/NPD
Lab File ID: C2563014.d
Initial Weight/Volume: 1000 mL
Final Weight/Volume: 1 mL
Injection Volume: 1 uL
Column ID: PRIMARY

Analyte	Result (ug/L)	Qualifier	RL	RL
Diesel Range Organics [C10-C28]	890		500	500

Surrogate	%Rec	Acceptance Limits
o-Terphenyl	57	24 - 132

Client: STV Incorporated

Job Number: 220-9412-1
Sdg Number: 220-9412

Client Sample ID: **W-EXC**

Lab Sample ID: 220-9412-2
Client Matrix: Water

Date Sampled: 06/19/2009 1000
Date Received: 06/20/2009 0748

8015B Hydrocarbon Product Identification (GC)

Method: 8015B
Preparation: 3510C
Dilution: 1.0
Date Analyzed: 06/22/2009 0544
Date Prepared: 06/20/2009 1314

Analysis Batch: 220-28034
Prep Batch: 220-28304

Instrument ID: HP5890 with FID/NPD
Lab File ID: C2561439.d
Initial Weight/Volume: 1000 mL
Final Weight/Volume: 1 mL
Injection Volume: 1 uL
Column ID: PRIMARY

Surrogate	%Rec	Acceptance Limits
o-Terphenyl	62	24 - 132

Client: STV Incorporated

Job Number: 220-9412-1
Sdg Number: 220-9412

Client Sample ID: **S-1**

Lab Sample ID:	220-9412-3			Date Sampled:	06/19/2009 1045
Client Matrix:	Solid	% Moisture:	56.4	Date Received:	06/20/2009 0748

8015B Diesel Range Organics (DRO) (GC)

Method:	8015B	Analysis Batch: 220-28491		Instrument ID:	HP5890 with FID/NPD
Preparation:	3550B	Prep Batch: 220-28294		Lab File ID:	C2563015.d
Dilution:	25			Initial Weight/Volume:	30.47 g
Date Analyzed:	06/25/2009 0121			Final Weight/Volume:	1 mL
Date Prepared:	06/20/2009 1131			Injection Volume:	1 uL
				Column ID:	PRIMARY

Analyte	DryWt Corrected: Y	Result (ug/Kg)	Qualifier	RL	RL
Diesel Range Organics [C10-C28]		5100000		960000	960000

Surrogate	%Rec		Acceptance Limits
o-Terphenyl	0	*	28 - 146

Client: STV Incorporated

Job Number: 220-9412-1
Sdg Number: 220-9412

Client Sample ID: **S-2**

Lab Sample ID:	220-9412-4			Date Sampled:	06/19/2009 1115
Client Matrix:	Solid	% Moisture:	53.7	Date Received:	06/20/2009 0748

8015B Diesel Range Organics (DRO) (GC)

Method:	8015B	Analysis Batch: 220-28491		Instrument ID:	HP5890 with FID/NPD
Preparation:	3550B	Prep Batch: 220-28294		Lab File ID:	C2563016.d
Dilution:	100			Initial Weight/Volume:	30.53 g
Date Analyzed:	06/25/2009 0148			Final Weight/Volume:	1 mL
Date Prepared:	06/20/2009 1131			Injection Volume:	1 uL
				Column ID:	PRIMARY

Analyte	DryWt Corrected: Y	Result (ug/Kg)	Qualifier	RL	RL
Diesel Range Organics [C10-C28]		7000000		3600000	3600000

Surrogate	%Rec		Acceptance Limits
o-Terphenyl	0	*	28 - 146

Client: STV Incorporated

Job Number: 220-9412-1
Sdg Number: 220-9412

Client Sample ID: **S-1**

Lab Sample ID: 220-9412-3
Client Matrix: Solid

Date Sampled: 06/19/2009 1045
Date Received: 06/20/2009 0748

8081A Organochlorine Pesticides (GC)-TCLP

Method: 8081A
Preparation: 3510C
Dilution: 1.0
Date Analyzed: 06/25/2009 0143
Date Prepared: 06/23/2009 1238
Date Leached: 06/22/2009 1600

Analysis Batch: 220-28488
Prep Batch: 220-28387
Leachate Batch: 220-28369

Instrument ID: HP 6890 dual ECD
Lab File ID: C8418025.D
Initial Weight/Volume: 200 mL
Final Weight/Volume: 10 mL
Injection Volume: 1.0 uL
Column ID: PRIMARY

Analyte	DryWt Corrected: N	Result (mg/L)	Qualifier	MDL	RL
Chlordane (technical)		0.0025	U	0.00021	0.0025
Endrin		0.00050	U	0.000068	0.00050
Heptachlor		0.00025	U	0.000030	0.00025
Heptachlor epoxide		0.00025	U	0.000028	0.00025
gamma-BHC (Lindane)		0.00025	U	0.000028	0.00025
Methoxychlor		0.0025	U *	0.00041	0.0025
Toxaphene		0.012	U	0.00020	0.012

Surrogate	%Rec	Acceptance Limits
DCB Decachlorobiphenyl	70	29 - 156
Tetrachloro-m-xylene	90	53 - 144

Method: 8081A
Preparation: 3510C
Dilution: 1.0
Date Analyzed: 06/25/2009 0143
Date Prepared: 06/23/2009 1238
Date Leached: 06/22/2009 1600

Analysis Batch: 220-28488
Prep Batch: 220-28387
Leachate Batch: 220-28369

Instrument ID: HP 6890 dual ECD
Lab File ID: D8418025.D
Initial Weight/Volume: 200 mL
Final Weight/Volume: 10 mL
Injection Volume: 1.0 uL
Column ID: SECONDARY

Surrogate	%Rec	Acceptance Limits
DCB Decachlorobiphenyl	67	29 - 156
Tetrachloro-m-xylene	86	53 - 144

Client: STV Incorporated

Job Number: 220-9412-1
Sdg Number: 220-9412

Client Sample ID: **S-1**

Lab Sample ID: 220-9412-3
Client Matrix: Solid
% Moisture: 56.4
Date Sampled: 06/19/2009 1045
Date Received: 06/20/2009 0748

8081A Organochlorine Pesticides (GC)

Method: 8081A
Preparation: 3550B
Dilution: 5.0
Date Analyzed: 06/23/2009 1625
Date Prepared: 06/20/2009 1207
Analysis Batch: 220-28430
Prep Batch: 220-28296
Instrument ID: HP 5890 with dual ECD
Lab File ID: D7733047.D
Initial Weight/Volume: 30.04 g
Final Weight/Volume: 10 mL
Injection Volume: 1.0 uL
Column ID: PRIMARY

Analyte	DryWt Corrected: Y	Result (ug/Kg)	Qualifier	MDL	RL
4,4'-DDD		310		6.8	38
4,4'-DDE		130		7.7	38
4,4'-DDT		410	*	9.3	38
Aldrin		6.4	J	2.1	19
alpha-BHC		19	U	2.8	19
beta-BHC		18	J	4.3	19
delta-BHC		19	U	4.2	19
Dieldrin		180		6.5	38
Endosulfan I		19	U	3.3	19
Endosulfan II		38	U	7.1	38
Endosulfan sulfate		38	U	6.8	38
Endrin		270		7.1	38
Endrin ketone		76		6.9	38
gamma-BHC (Lindane)		19	U	3.3	19
Heptachlor		41		3.6	19
Heptachlor epoxide		27		3.4	19
Methoxychlor		96	J *	42	190
Toxaphene		950	U	100	950
alpha-Chlordane		61		3.1	19
gamma-Chlordane		94		6.1	19

Surrogate	%Rec		Acceptance Limits
DCB Decachlorobiphenyl	399	*	25 - 159
Tetrachloro-m-xylene	111		24 - 154

Method: 8081A
Preparation: 3550B
Dilution: 5.0
Date Analyzed: 06/23/2009 1625
Date Prepared: 06/20/2009 1207
Analysis Batch: 220-28430
Prep Batch: 220-28296
Instrument ID: HP 5890 with dual ECD
Lab File ID: C7733047.D
Initial Weight/Volume: 30.04 g
Final Weight/Volume: 10 mL
Injection Volume: 1.0 uL
Column ID: SECONDARY

Surrogate	%Rec		Acceptance Limits
DCB Decachlorobiphenyl	379	*	25 - 159
Tetrachloro-m-xylene	108		24 - 154

Client: STV Incorporated

Job Number: 220-9412-1
Sdg Number: 220-9412

Client Sample ID: **S-1**

Lab Sample ID:	220-9412-3			Date Sampled:	06/19/2009 1045
Client Matrix:	Solid	% Moisture:	56.4	Date Received:	06/20/2009 0748

8081A Organochlorine Pesticides (GC)

Method:	8081A	Analysis Batch: 220-28430		Instrument ID:	HP 5890 with dual ECD
Preparation:	3550B	Prep Batch: 220-28296		Lab File ID:	D7733056.D
Dilution:	5.0			Initial Weight/Volume:	30.04 g
Date Analyzed:	06/23/2009 2024			Final Weight/Volume:	10 mL
Date Prepared:	06/20/2009 1207			Injection Volume:	1.0 uL
				Column ID:	PRIMARY

Analyte	DryWt Corrected: Y	Result (ug/Kg)	Qualifier	MDL	RL
Endrin aldehyde		75		4.7	38

Client: STV Incorporated

Job Number: 220-9412-1
Sdg Number: 220-9412

Client Sample ID: **S-1**

Lab Sample ID: 220-9412-3
Client Matrix: Solid
% Moisture: 56.4
Date Sampled: 06/19/2009 1045
Date Received: 06/20/2009 0748

8081A Organochlorine Pesticides (GC)

Method: 8081A
Preparation: 3550B
Dilution: 5.0
Date Analyzed: 06/23/2009 2024
Date Prepared: 06/20/2009 1207

Analysis Batch: 220-28430
Prep Batch: 220-28296

Instrument ID: HP 5890 with dual ECD
Lab File ID: C7733056.D
Initial Weight/Volume: 30.04 g
Final Weight/Volume: 10 mL
Injection Volume: 1.0 uL
Column ID: SECONDARY

Surrogate	%Rec		Acceptance Limits
DCB Decachlorobiphenyl	280	*	25 - 159
DCB Decachlorobiphenyl	473	*	25 - 159
Tetrachloro-m-xylene	135		24 - 154
Tetrachloro-m-xylene	613	*	24 - 154

Client: STV Incorporated

Job Number: 220-9412-1
Sdg Number: 220-9412

Client Sample ID: **S-2**

Lab Sample ID: 220-9412-4
Client Matrix: Solid

Date Sampled: 06/19/2009 1115
Date Received: 06/20/2009 0748

8081A Organochlorine Pesticides (GC)-TCLP

Method: 8081A
Preparation: 3510C
Dilution: 1.0
Date Analyzed: 06/25/2009 0208
Date Prepared: 06/23/2009 1238
Date Leached: 06/22/2009 1600

Analysis Batch: 220-28488
Prep Batch: 220-28387
Leachate Batch: 220-28369

Instrument ID: HP 6890 dual ECD
Lab File ID: C8418026.D
Initial Weight/Volume: 200 mL
Final Weight/Volume: 10 mL
Injection Volume: 1.0 uL
Column ID: PRIMARY

Analyte	DryWt Corrected: N	Result (mg/L)	Qualifier	MDL	RL
Chlordane (technical)		0.0025	U	0.00021	0.0025
Endrin		0.00050	U	0.000068	0.00050
Heptachlor		0.000042	J	0.000030	0.00025
Heptachlor epoxide		0.00025	U	0.000028	0.00025
gamma-BHC (Lindane)		0.00025	U	0.000028	0.00025
Methoxychlor		0.0025	U *	0.00041	0.0025
Toxaphene		0.012	U	0.00020	0.012

Surrogate	%Rec	Acceptance Limits
DCB Decachlorobiphenyl	60	29 - 156
Tetrachloro-m-xylene	88	53 - 144

Method: 8081A
Preparation: 3510C
Dilution: 1.0
Date Analyzed: 06/25/2009 0208
Date Prepared: 06/23/2009 1238
Date Leached: 06/22/2009 1600

Analysis Batch: 220-28488
Prep Batch: 220-28387
Leachate Batch: 220-28369

Instrument ID: HP 6890 dual ECD
Lab File ID: D8418026.D
Initial Weight/Volume: 200 mL
Final Weight/Volume: 10 mL
Injection Volume: 1.0 uL
Column ID: SECONDARY

Surrogate	%Rec	Acceptance Limits
DCB Decachlorobiphenyl	59	29 - 156
Tetrachloro-m-xylene	82	53 - 144

Client: STV Incorporated

Job Number: 220-9412-1
Sdg Number: 220-9412

Client Sample ID: **S-2**

Lab Sample ID: 220-9412-4
Client Matrix: Solid
% Moisture: 53.7
Date Sampled: 06/19/2009 1115
Date Received: 06/20/2009 0748

8081A Organochlorine Pesticides (GC)

Method: 8081A
Preparation: 3550B
Dilution: 2.0
Date Analyzed: 06/23/2009 2004
Date Prepared: 06/20/2009 1207
Analysis Batch: 220-28430
Prep Batch: 220-28296
Instrument ID: HP 5890 with dual ECD
Lab File ID: C7733055.D
Initial Weight/Volume: 30.29 g
Final Weight/Volume: 10 mL
Injection Volume: 1.0 uL
Column ID: PRIMARY

Analyte	DryWt Corrected: Y	Result (ug/Kg)	Qualifier	MDL	RL
4,4'-DDD		120		2.5	14
4,4'-DDE		66		2.9	14
4,4'-DDT		260	*	3.5	14
Aldrin		7.3	U	0.77	7.3
alpha-BHC		3.0	J	1.0	7.3
beta-BHC		8.3		1.6	7.3
delta-BHC		7.3	U	1.6	7.3
Dieldrin		74		2.4	14
Endosulfan I		7.3	U	1.2	7.3
Endosulfan II		14	U	2.7	14
Endosulfan sulfate		14	U	2.5	14
Endrin		200		2.6	14
Endrin ketone		43		2.6	14
gamma-BHC (Lindane)		7.3	U	1.2	7.3
Heptachlor		26		1.4	7.3
Heptachlor epoxide		11		1.3	7.3
Methoxychlor		61	J *	16	73
Toxaphene		360	U	39	360
alpha-Chlordane		31		1.2	7.3
gamma-Chlordane		32		2.3	7.3

Surrogate	%Rec		Acceptance Limits
DCB Decachlorobiphenyl	107		25 - 159
Tetrachloro-m-xylene	26		24 - 154

Method: 8081A
Preparation: 3550B
Dilution: 2.0
Date Analyzed: 06/23/2009 2004
Date Prepared: 06/20/2009 1207
Analysis Batch: 220-28430
Prep Batch: 220-28296
Instrument ID: HP 5890 with dual ECD
Lab File ID: D7733055.D
Initial Weight/Volume: 30.29 g
Final Weight/Volume: 10 mL
Injection Volume: 1.0 uL
Column ID: SECONDARY

Surrogate	%Rec		Acceptance Limits
DCB Decachlorobiphenyl	82		25 - 159
Tetrachloro-m-xylene	23	*	24 - 154

Client: STV Incorporated

Job Number: 220-9412-1
Sdg Number: 220-9412

Client Sample ID: S-2

Lab Sample ID: 220-9412-4
Client Matrix: Solid
% Moisture: 53.7
Date Sampled: 06/19/2009 1115
Date Received: 06/20/2009 0748

8081A Organochlorine Pesticides (GC)

Method: 8081A
Preparation: 3550B
Dilution: 2.0
Date Analyzed: 06/23/2009 2044
Date Prepared: 06/20/2009 1207
Analysis Batch: 220-28430
Prep Batch: 220-28296
Instrument ID: HP 5890 with dual ECD
Lab File ID: D7733057.D
Initial Weight/Volume: 30.29 g
Final Weight/Volume: 10 mL
Injection Volume: 1.0 uL
Column ID: PRIMARY

Analyte	DryWt Corrected: Y	Result (ug/Kg)	Qualifier	MDL	RL
Endrin aldehyde		46		1.7	14

Client: STV Incorporated

Job Number: 220-9412-1
Sdg Number: 220-9412

Client Sample ID: **S-2**

Lab Sample ID:	220-9412-4			Date Sampled:	06/19/2009 1115
Client Matrix:	Solid	% Moisture:	53.7	Date Received:	06/20/2009 0748

8081A Organochlorine Pesticides (GC)

Method:	8081A	Analysis Batch: 220-28430		Instrument ID:	HP 5890 with dual ECD
Preparation:	3550B	Prep Batch: 220-28296		Lab File ID:	C7733057.D
Dilution:	2.0			Initial Weight/Volume:	30.29 g
Date Analyzed:	06/23/2009 2044			Final Weight/Volume:	10 mL
Date Prepared:	06/20/2009 1207			Injection Volume:	1.0 uL
				Column ID:	SECONDARY

Surrogate	%Rec		Acceptance Limits
DCB Decachlorobiphenyl	101		25 - 159
DCB Decachlorobiphenyl	162	*	25 - 159
Tetrachloro-m-xylene	20	*	24 - 154
Tetrachloro-m-xylene	191	*	24 - 154

Client: STV Incorporated

Job Number: 220-9412-1
Sdg Number: 220-9412

Client Sample ID: **W-TANK**

Lab Sample ID: 220-9412-1
Client Matrix: Water

Date Sampled: 06/19/2009 1030
Date Received: 06/20/2009 0748

8082 Polychlorinated Biphenyls (PCBs) by Gas Chromatography

Method: 8082
Preparation: 3510C
Dilution: 1.0
Date Analyzed: 06/22/2009 1027
Date Prepared: 06/20/2009 1308

Analysis Batch: 220-28368
Prep Batch: 220-28303

Instrument ID: HP 6890 dual ECD
Lab File ID: C9043990.D
Initial Weight/Volume: 1000 mL
Final Weight/Volume: 10 mL
Injection Volume: 1.0 uL
Column ID: PRIMARY

Analyte	Result (ug/L)	Qualifier	MDL	RL
PCB-1016	0.50	U	0.050	0.50
PCB-1221	0.50	U	0.050	0.50
PCB-1232	0.50	U	0.050	0.50
PCB-1242	1.6		0.050	0.50
PCB-1248	0.50	U	0.050	0.50
PCB-1254	2.3		0.082	0.50
PCB-1260	2.2		0.082	0.50

Surrogate	%Rec		Acceptance Limits
Tetrachloro-m-xylene	29		22 - 145
DCB Decachlorobiphenyl	26	*	29 - 135

Method: 8082
Preparation: 3510C
Dilution: 1.0
Date Analyzed: 06/22/2009 1027
Date Prepared: 06/20/2009 1308

Analysis Batch: 220-28368
Prep Batch: 220-28303

Instrument ID: HP 6890 dual ECD
Lab File ID: D9043990.D
Initial Weight/Volume: 1000 mL
Final Weight/Volume: 10 mL
Injection Volume: 1.0 uL
Column ID: SECONDARY

Surrogate	%Rec		Acceptance Limits
Tetrachloro-m-xylene	28		22 - 145
DCB Decachlorobiphenyl	24	*	29 - 135

Client: STV Incorporated

Job Number: 220-9412-1
Sdg Number: 220-9412

Client Sample ID: **W-EXC**

Lab Sample ID: 220-9412-2
Client Matrix: Water

Date Sampled: 06/19/2009 1000
Date Received: 06/20/2009 0748

8082 Polychlorinated Biphenyls (PCBs) by Gas Chromatography

Method: 8082
Preparation: 3510C
Dilution: 1.0
Date Analyzed: 06/22/2009 1046
Date Prepared: 06/20/2009 1308

Analysis Batch: 220-28368
Prep Batch: 220-28303

Instrument ID: HP 6890 dual ECD
Lab File ID: D9043991.D
Initial Weight/Volume: 1000 mL
Final Weight/Volume: 10 mL
Injection Volume: 1.0 uL
Column ID: PRIMARY

Analyte	Result (ug/L)	Qualifier	MDL	RL
PCB-1016	0.50	U	0.050	0.50
PCB-1221	0.50	U	0.050	0.50
PCB-1232	0.50	U	0.050	0.50
PCB-1242	0.50	U	0.050	0.50
PCB-1248	0.50	U	0.050	0.50
PCB-1254	0.50	U	0.082	0.50
PCB-1260	0.50	U	0.082	0.50

Surrogate	%Rec		Acceptance Limits
Tetrachloro-m-xylene	65		22 - 145
DCB Decachlorobiphenyl	27	*	29 - 135

Client: STV Incorporated

Job Number: 220-9412-1
Sdg Number: 220-9412

Client Sample ID: **S-1**

Lab Sample ID: 220-9412-3
Client Matrix: Solid
% Moisture: 56.4
Date Sampled: 06/19/2009 1045
Date Received: 06/20/2009 0748

8082 Polychlorinated Biphenyls (PCBs) by Gas Chromatography

Method: 8082
Preparation: 3550B
Dilution: 2.0
Date Analyzed: 06/23/2009 1241
Date Prepared: 06/22/2009 1349
Analysis Batch: 220-28393
Prep Batch: 220-28341
Instrument ID: HP 6890 dual ECD
Lab File ID: C90431051.D
Initial Weight/Volume: 30.40 g
Final Weight/Volume: 10 mL
Injection Volume: 1.0 uL
Column ID: PRIMARY

Analyte	DryWt Corrected: Y	Result (ug/Kg)	Qualifier	MDL	RL
PCB-1016		77	U	6.0	77
PCB-1221		77	U	6.0	77
PCB-1232		77	U	6.0	77
PCB-1242		590		6.0	77
PCB-1248		77	U	6.0	77
PCB-1254		520		6.5	77
PCB-1260		760		6.5	77

Surrogate	%Rec	Acceptance Limits
Tetrachloro-m-xylene	24	24 - 150
DCB Decachlorobiphenyl	84	24 - 150

Method: 8082
Preparation: 3550B
Dilution: 2.0
Date Analyzed: 06/23/2009 1241
Date Prepared: 06/22/2009 1349
Analysis Batch: 220-28393
Prep Batch: 220-28341
Instrument ID: HP 6890 dual ECD
Lab File ID: D90431051.D
Initial Weight/Volume: 30.40 g
Final Weight/Volume: 10 mL
Injection Volume: 1.0 uL
Column ID: SECONDARY

Surrogate	%Rec	Acceptance Limits
Tetrachloro-m-xylene	23	24 - 150
DCB Decachlorobiphenyl	77	24 - 150

Client: STV Incorporated

Job Number: 220-9412-1
Sdg Number: 220-9412

Client Sample ID: **S-2**

Lab Sample ID: 220-9412-4
Client Matrix: Solid
% Moisture: 53.7
Date Sampled: 06/19/2009 1115
Date Received: 06/20/2009 0748

8082 Polychlorinated Biphenyls (PCBs) by Gas Chromatography

Method: 8082
Preparation: 3550B
Dilution: 5.0
Date Analyzed: 06/23/2009 1222
Date Prepared: 06/22/2009 1349
Analysis Batch: 220-28393
Prep Batch: 220-28341
Instrument ID: HP 6890 dual ECD
Lab File ID: C90431050.D
Initial Weight/Volume: 30.20 g
Final Weight/Volume: 10 mL
Injection Volume: 1.0 uL
Column ID: PRIMARY

Analyte	DryWt Corrected: Y Result (ug/Kg)	Qualifier	MDL	RL
PCB-1016	180	U	14	180
PCB-1221	180	U	14	180
PCB-1232	180	U	14	180
PCB-1242	720		14	180
PCB-1248	180	U	14	180
PCB-1254	1100		15	180
PCB-1260	890		15	180

Surrogate	%Rec		Acceptance Limits
Tetrachloro-m-xylene	90		24 - 150
DCB Decachlorobiphenyl	190	*	24 - 150

Method: 8082
Preparation: 3550B
Dilution: 5.0
Date Analyzed: 06/23/2009 1222
Date Prepared: 06/22/2009 1349
Analysis Batch: 220-28393
Prep Batch: 220-28341
Instrument ID: HP 6890 dual ECD
Lab File ID: C90431050.D
Initial Weight/Volume: 30.20 g
Final Weight/Volume: 10 mL
Injection Volume: 1.0 uL
Column ID: SECONDARY

Surrogate	%Rec		Acceptance Limits
Tetrachloro-m-xylene	85		24 - 150
DCB Decachlorobiphenyl	188	*	24 - 150

Client: STV Incorporated

Job Number: 220-9412-1
Sdg Number: 220-9412

Client Sample ID: S-1

Lab Sample ID: 220-9412-3
Client Matrix: Solid

Date Sampled: 06/19/2009 1045
Date Received: 06/20/2009 0748

8151A Herbicides (GC)-TCLP

Method:	8151A	Analysis Batch: 680-141545		Instrument ID:	GC SemiVolatiles - S
Preparation:	8151A	Prep Batch: 680-141206		Lab File ID:	sf26008.d
Dilution:	1.0	Leachate Batch: 680-141157		Initial Weight/Volume:	10 mL
Date Analyzed:	06/26/2009 1622			Final Weight/Volume:	10 mL
Date Prepared:	06/24/2009 1009			Injection Volume:	1 uL
Date Leached:	06/23/2009 1520			Column ID:	PRIMARY

Analyte	DryWt Corrected: N	Result (mg/L)	Qualifier	MDL	RL
2,4-D		0.050	U	0.050	0.050
Silvex (2,4,5-TP)		0.050	U	0.050	0.050

Surrogate	%Rec	Acceptance Limits
DCAA	104	50 - 150

Client: STV Incorporated

Job Number: 220-9412-1
Sdg Number: 220-9412

Client Sample ID: **S-1**

Lab Sample ID: 220-9412-3
Client Matrix: Solid
% Moisture: 56.4
Date Sampled: 06/19/2009 1045
Date Received: 06/20/2009 0748

8151A Herbicides (GC)

Method: 8151A
Preparation: 8151A
Dilution: 20
Date Analyzed: 06/26/2009 2121
Date Prepared: 06/23/2009 1302
Analysis Batch: 680-141545
Prep Batch: 680-141123
Instrument ID: GC SemiVolatiles - S
Lab File ID: sf26024.d
Initial Weight/Volume: 30.2 g
Final Weight/Volume: 10 mL
Injection Volume: 1 uL
Column ID: PRIMARY

Analyte	DryWt Corrected: Y Result (ug/Kg)	Qualifier	MDL	RL
2,4-D	380	U	230	380
2,4-DB	380	U	140	380
2,4,5-T	380	U	100	380
Silvex (2,4,5-TP)	380	U	73	380
Dalapon	15000	U	130	15000
Dicamba	380	U	86	380
Dichlorprop	380	U	50	380
Dinoseb	4600	U	210	4600
MCPA	91000	U *	8600	91000
Mecoprop	91000	U	7700	91000
Pentachlorophenol	380	U	19	380

Surrogate	%Rec		Acceptance Limits
DCAA	0	D	58 - 110

Client: STV Incorporated

Job Number: 220-9412-1
Sdg Number: 220-9412

Client Sample ID: S-2

Lab Sample ID: 220-9412-4
Client Matrix: Solid

Date Sampled: 06/19/2009 1115
Date Received: 06/20/2009 0748

8151A Herbicides (GC)-TCLP

Method: 8151A
Preparation: 8151A
Dilution: 1.0
Date Analyzed: 06/26/2009 1641
Date Prepared: 06/24/2009 1009
Date Leached: 06/23/2009 1520

Analysis Batch: 680-141545
Prep Batch: 680-141206
Leachate Batch: 680-141157

Instrument ID: GC SemiVolatiles - S
Lab File ID: sf26009.d
Initial Weight/Volume: 10 mL
Final Weight/Volume: 10 mL
Injection Volume: 1 uL
Column ID: PRIMARY

Analyte	DryWt Corrected: N	Result (mg/L)	Qualifier	MDL	RL
2,4-D		0.050	U	0.050	0.050
Silvex (2,4,5-TP)		0.050	U	0.050	0.050

Surrogate	%Rec	Acceptance Limits
DCAA	96	50 - 150

Client: STV Incorporated

Job Number: 220-9412-1
Sdg Number: 220-9412

Client Sample ID: **S-2**

Lab Sample ID: 220-9412-4
Client Matrix: Solid
% Moisture: 53.7
Date Sampled: 06/19/2009 1115
Date Received: 06/20/2009 0748

8151A Herbicides (GC)

Method: 8151A
Preparation: 8151A
Dilution: 1.0
Date Analyzed: 06/26/2009 1834
Date Prepared: 06/23/2009 1302
Analysis Batch: 680-141545
Prep Batch: 680-141123
Instrument ID: GC SemiVolatiles - S
Lab File ID: sf26015.d
Initial Weight/Volume: 30.2 g
Final Weight/Volume: 10 mL
Injection Volume: 1 uL
Column ID: PRIMARY

Analyte	DryWt Corrected: Y Result (ug/Kg)	Qualifier	MDL	RL
2,4-D	18	U	11	18
2,4-DB	18	U	6.4	18
2,4,5-T	18	U	4.9	18
Silvex (2,4,5-TP)	18	U	3.4	18
Dalapon	710	U	6.2	710
Dicamba	18	U	4.1	18
Dichlorprop	18	U	2.4	18
Dinoseb	210	U	9.9	210
MCPA	4300	U *	410	4300
Mecoprop	4300	U	360	4300
Pentachlorophenol	18	U	0.90	18

Surrogate	%Rec		Acceptance Limits
DCAA	1240	E *	58 - 110

Client: STV Incorporated

Job Number: 220-9412-1
Sdg Number: 220-9412

Client Sample ID: **W-TANK**

Lab Sample ID: 220-9412-1
Client Matrix: Water

Date Sampled: 06/19/2009 1030
Date Received: 06/20/2009 0748

6020 Metals (ICP/MS)

Method: 6020
Preparation: 3010A
Dilution: 5.0
Date Analyzed: 06/24/2009 1248
Date Prepared: 06/23/2009 1156

Analysis Batch: 220-28480
Prep Batch: 220-28380

Instrument ID: Agilent ICPMS
Lab File ID: N/A
Initial Weight/Volume: 100 mL
Final Weight/Volume: 500 mL

Analyte	Result (ug/L)	Qualifier	MDL	RL
Silver	12.5	U	2.5	12.5
Arsenic	25.8		2.5	12.5
Beryllium	12.5	U	2.5	12.5
Cadmium	13.1		2.5	12.5
Chromium	101		5.0	25.0
Copper	290		2.5	25.0
Nickel	126		2.5	12.5
Lead	280		2.5	12.5
Antimony	16.2	J	5.0	20.0
Selenium	25.0	U	5.0	25.0
Thallium	17.5	U	5.0	17.5
Zinc	506		12.5	125

7470A Mercury (CVAA)

Method: 7470A
Preparation: 7470A
Dilution: 1.0
Date Analyzed: 06/23/2009 1451
Date Prepared: 06/23/2009 1121

Analysis Batch: 220-28406
Prep Batch: 220-28377

Instrument ID: Perkin Elmer FIMS
Lab File ID: N/A
Initial Weight/Volume: 25 mL
Final Weight/Volume: 50 mL

Analyte	Result (ug/L)	Qualifier	MDL	RL
Mercury	0.44		0.060	0.20

Client: STV Incorporated

Job Number: 220-9412-1
Sdg Number: 220-9412

Client Sample ID: **W-EXC**

Lab Sample ID: 220-9412-2
Client Matrix: Water

Date Sampled: 06/19/2009 1000
Date Received: 06/20/2009 0748

6020 Metals (ICP/MS)

Method:	6020	Analysis Batch: 220-28480	Instrument ID: Agilent ICPMS
Preparation:	3010A	Prep Batch: 220-28380	Lab File ID: N/A
Dilution:	5.0		Initial Weight/Volume: 100 mL
Date Analyzed:	06/24/2009 1252		Final Weight/Volume: 500 mL
Date Prepared:	06/23/2009 1156		

Analyte	Result (ug/L)	Qualifier	MDL	RL
Silver	12.5	U	2.5	12.5
Arsenic	7.3	J	2.5	12.5
Beryllium	12.5	U	2.5	12.5
Cadmium	12.5	U	2.5	12.5
Chromium	18.4	J	5.0	25.0
Copper	54.8		2.5	25.0
Nickel	30.0		2.5	12.5
Lead	47.0		2.5	12.5
Antimony	20.0	U	5.0	20.0
Selenium	25.0	U	5.0	25.0
Thallium	17.5	U	5.0	17.5
Zinc	103	J	12.5	125

7470A Mercury (CVAA)

Method:	7470A	Analysis Batch: 220-28406	Instrument ID: Perkin Elmer FIMS
Preparation:	7470A	Prep Batch: 220-28377	Lab File ID: N/A
Dilution:	1.0		Initial Weight/Volume: 25 mL
Date Analyzed:	06/23/2009 1452		Final Weight/Volume: 50 mL
Date Prepared:	06/23/2009 1121		

Analyte	Result (ug/L)	Qualifier	MDL	RL
Mercury	0.20	U	0.060	0.20

Client: STV Incorporated

Job Number: 220-9412-1
Sdg Number: 220-9412

Client Sample ID: **S-1**

Lab Sample ID: 220-9412-3
Client Matrix: Solid

Date Sampled: 06/19/2009 1045
Date Received: 06/20/2009 0748

6010B Metals (ICP)-TCLP

Method:	6010B	Analysis Batch: 220-28513		Instrument ID:	Perkin Elmer ICP
Preparation:	3010A	Prep Batch: 220-28372		Lab File ID:	N/A
Dilution:	1.0	Leachate Batch: 220-28369		Initial Weight/Volume:	20 mL
Date Analyzed:	06/25/2009 1438			Final Weight/Volume:	50 mL
Date Prepared:	06/23/2009 1038				
Date Leached:	06/22/2009 1600				

Analyte	DryWt Corrected: N	Result (mg/L)	Qualifier	MDL	RL
Arsenic		0.064	J	0.020	0.075
Barium		0.33		0.0012	0.025
Cadmium		0.025	U	0.0050	0.025
Chromium		0.023	J	0.0025	0.025
Lead		0.075	U	0.012	0.075
Selenium		0.19	U	0.062	0.19
Silver		0.025	U	0.0012	0.025

6020 Metals (ICP/MS)

Method:	6020	Analysis Batch: 220-28480		Instrument ID:	Agilent ICPMS
Preparation:	3050B	Prep Batch: 220-28339		Lab File ID:	N/A
Dilution:	1.0			Initial Weight/Volume:	1.15 g
Date Analyzed:	06/24/2009 1331			Final Weight/Volume:	1000 mL
Date Prepared:	06/22/2009 1337				

Analyte	DryWt Corrected: Y	Result (mg/Kg)	Qualifier	MDL	RL
Silver		11.2		0.20	1.0
Arsenic		45.6		0.20	1.0
Beryllium		0.70	J	0.30	1.0
Cadmium		51.6		0.20	1.0
Chromium		342		0.40	2.0
Copper		974		0.20	2.0
Nickel		392		0.20	1.0
Lead		607		0.20	1.0
Antimony		8.5		0.40	1.6
Selenium		8.8		0.60	2.0
Thallium		0.56	J	0.40	1.4
Zinc		1350		1.0	10

Client: STV Incorporated

Job Number: 220-9412-1
Sdg Number: 220-9412

Client Sample ID: **S-1**

Lab Sample ID: 220-9412-3
Client Matrix: Solid

Date Sampled: 06/19/2009 1045
Date Received: 06/20/2009 0748

7470A Mercury (CVAA)-TCLP

Method:	7470A	Analysis Batch: 220-28406		Instrument ID:	Perkin Elmer FIMS
Preparation:	7470A	Prep Batch: 220-28377		Lab File ID:	N/A
Dilution:	1.0	Leachate Batch: 220-28369		Initial Weight/Volume:	5 mL
Date Analyzed:	06/23/2009 1515			Final Weight/Volume:	50 mL
Date Prepared:	06/23/2009 1121				
Date Leached:	06/22/2009 1600				

Analyte	DryWt Corrected: N	Result (mg/L)	Qualifier	MDL	RL
Mercury		0.0020	U	0.0010	0.0020

7471A Mercury (CVAA)

Method:	7471A	Analysis Batch: 220-28474		Instrument ID:	Perkin Elmer FIMS
Preparation:	7471A	Prep Batch: 220-28373		Lab File ID:	N/A
Dilution:	5.0			Initial Weight/Volume:	0.62 g
Date Analyzed:	06/24/2009 1546			Final Weight/Volume:	50 mL
Date Prepared:	06/23/2009 1058				

Analyte	DryWt Corrected: Y	Result (mg/Kg)	Qualifier	MDL	RL
Mercury		2.4		0.044	0.55

Client: STV Incorporated

Job Number: 220-9412-1
Sdg Number: 220-9412

Client Sample ID: **S-2**

Lab Sample ID: 220-9412-4
Client Matrix: Solid

Date Sampled: 06/19/2009 1115
Date Received: 06/20/2009 0748

6010B Metals (ICP)-TCLP

Method: 6010B
Preparation: 3010A
Dilution: 1.0
Date Analyzed: 06/25/2009 1441
Date Prepared: 06/23/2009 1038
Date Leached: 06/22/2009 1600

Analysis Batch: 220-28513
Prep Batch: 220-28372
Leachate Batch: 220-28369

Instrument ID: Perkin Elmer ICP
Lab File ID: N/A
Initial Weight/Volume: 20 mL
Final Weight/Volume: 50 mL

Analyte	DryWt Corrected: N	Result (mg/L)	Qualifier	MDL	RL
Arsenic		0.075	U	0.020	0.075
Barium		0.34		0.0012	0.025
Cadmium		0.025	U	0.0050	0.025
Chromium		0.038		0.0025	0.025
Lead		0.075	U	0.012	0.075
Selenium		0.19	U	0.062	0.19
Silver		0.025	U	0.0012	0.025

6020 Metals (ICP/MS)

Method: 6020
Preparation: 3050B
Dilution: 1.0
Date Analyzed: 06/24/2009 1348
Date Prepared: 06/22/2009 1337

Analysis Batch: 220-28480
Prep Batch: 220-28339

Instrument ID: Agilent ICPMS
Lab File ID: N/A
Initial Weight/Volume: 1.45 g
Final Weight/Volume: 1000 mL

Analyte	DryWt Corrected: Y	Result (mg/Kg)	Qualifier	MDL	RL
Silver		19.5		0.15	0.74
Arsenic		34.0		0.15	0.74
Beryllium		0.80		0.22	0.74
Cadmium		104		0.15	0.74
Chromium		530		0.30	1.5
Copper		1450		0.15	1.5
Nickel		337		0.15	0.74
Lead		1370		0.15	0.74
Antimony		7.3		0.30	1.2
Selenium		5.0		0.45	1.5
Thallium		0.31	J	0.30	1.0
Zinc		2240		0.74	7.4

Client: STV Incorporated

Job Number: 220-9412-1
Sdg Number: 220-9412

Client Sample ID: **S-2**

Lab Sample ID: 220-9412-4
Client Matrix: Solid

Date Sampled: 06/19/2009 1115
Date Received: 06/20/2009 0748

7470A Mercury (CVAA)-TCLP

Method:	7470A	Analysis Batch: 220-28406		Instrument ID:	Perkin Elmer FIMS
Preparation:	7470A	Prep Batch: 220-28377		Lab File ID:	N/A
Dilution:	1.0	Leachate Batch: 220-28369		Initial Weight/Volume:	5 mL
Date Analyzed:	06/23/2009 1516			Final Weight/Volume:	50 mL
Date Prepared:	06/23/2009 1121				
Date Leached:	06/22/2009 1600				

Analyte	DryWt Corrected: N	Result (mg/L)	Qualifier	MDL	RL
Mercury		0.0020	U	0.0010	0.0020

7471A Mercury (CVAA)

Method:	7471A	Analysis Batch: 220-28474		Instrument ID:	Perkin Elmer FIMS
Preparation:	7471A	Prep Batch: 220-28373		Lab File ID:	N/A
Dilution:	5.0			Initial Weight/Volume:	0.60 g
Date Analyzed:	06/24/2009 1547			Final Weight/Volume:	50 mL
Date Prepared:	06/23/2009 1058				

Analyte	DryWt Corrected: Y	Result (mg/Kg)	Qualifier	MDL	RL
Mercury		2.6		0.043	0.54

General Chemistry

Client Sample ID: **S-1**

Lab Sample ID: 220-9412-3
Client Matrix: Solid
% Moisture: 56.4
Date Sampled: 06/19/2009 1045
Date Received: 06/20/2009 0748

Analyte	Result	Qual	Units	MDL	RL	Dil	Method
Chromium, hexavalent	2.2	U	mg/Kg	0.24	2.2	1.0	7196A
	Anly Batch: 680-141487	Date Analyzed		06/26/2009 1319		DryWt Corrected: Y	
	Prep Batch: 680-141389	Date Prepared:		06/25/2009 1528			

Analyte	Result	Qual	Units	RL	RL	Dil	Method
Ignitability	neg		mm/sec	2.2	2.2	1.0	1030
	Anly Batch: 220-28346	Date Analyzed		06/22/2009 1446		DryWt Corrected: N	
Temperature	1890		Fahrenheit	1.00	1.00	1.0	1030
	Anly Batch: 220-28346	Date Analyzed		06/22/2009 1446		DryWt Corrected: N	
Cyanide, Reactive	0.50	U	mg/Kg	0.50	0.50	1.0	9012
	Anly Batch: 220-28401	Date Analyzed		06/23/2009 1344		DryWt Corrected: N	
	Prep Batch: 220-28376	Date Prepared:		06/22/2009 1425			
Sulfide, Reactive	372		mg/Kg	20.0	20.0	1.0	9034
	Anly Batch: 220-28438	Date Analyzed		06/24/2009 1042		DryWt Corrected: N	
	Prep Batch: 220-28436	Date Prepared:		06/22/2009 1505			
pH	8.52	HF	SU	0.100	0.100	1.0	9045C
	Anly Batch: 220-28443	Date Analyzed		06/24/2009 1213		DryWt Corrected: N	
Percent Moisture	56.4		%	0.10	0.10	1.0	Moisture
	Anly Batch: 220-28326	Date Analyzed		06/22/2009 1138			
Percent Solids	43.6		%	0.10	0.10	1.0	Moisture
	Anly Batch: 220-28326	Date Analyzed		06/22/2009 1138			

General Chemistry

Client Sample ID: S-2

Lab Sample ID: 220-9412-4
Client Matrix: Solid

% Moisture: 53.7

Date Sampled: 06/19/2009 1115
Date Received: 06/20/2009 0748

Analyte	Result	Qual	Units	MDL	RL	Dil	Method
Chromium, hexavalent	2.1	U	mg/Kg	0.23	2.1	1.0	7196A
	Anly Batch: 680-141487	Date Analyzed		06/26/2009 1319		DryWt Corrected: Y	
	Prep Batch: 680-141389	Date Prepared:		06/25/2009 1528			

Analyte	Result	Qual	Units	RL	RL	Dil	Method
Ignitability	neg		mm/sec	2.2	2.2	1.0	1030
	Anly Batch: 220-28346	Date Analyzed		06/22/2009 1448		DryWt Corrected: N	
Temperature	1890		Fahrenheit	1.00	1.00	1.0	1030
	Anly Batch: 220-28346	Date Analyzed		06/22/2009 1448		DryWt Corrected: N	
Cyanide, Reactive	0.50	U	mg/Kg	0.50	0.50	1.0	9012
	Anly Batch: 220-28401	Date Analyzed		06/23/2009 1345		DryWt Corrected: N	
	Prep Batch: 220-28376	Date Prepared:		06/22/2009 1425			
Sulfide, Reactive	644		mg/Kg	19.9	19.9	1.0	9034
	Anly Batch: 220-28438	Date Analyzed		06/24/2009 1051		DryWt Corrected: N	
	Prep Batch: 220-28436	Date Prepared:		06/22/2009 1505			
pH	8.34	HF	SU	0.100	0.100	1.0	9045C
	Anly Batch: 220-28443	Date Analyzed		06/24/2009 1219		DryWt Corrected: N	
Percent Moisture	53.7		%	0.10	0.10	1.0	Moisture
	Anly Batch: 220-28326	Date Analyzed		06/22/2009 1138			
Percent Solids	46.3		%	0.10	0.10	1.0	Moisture
	Anly Batch: 220-28326	Date Analyzed		06/22/2009 1138			

DATA REPORTING QUALIFIERS

Client: STV Incorporated

Job Number: 220-9412-1
Sdg Number: 220-9412

Lab Section	Qualifier	Description
GC/MS VOA		
	U	Analyzed for but not detected.
	J	Indicates an estimated value.
	*	LCS or LCSD exceeds the control limits
	*	Surrogate exceeds the control limit
	B	The analyte was found in an associated blank, as well as in the sample.
GC/MS Semi VOA		
	U	Analyzed for but not detected.
	J	Indicates an estimated value.
	*	LCS or LCSD exceeds the control limits
GC VOA		
	U	Analyzed for but not detected.
	J	Indicates an estimated value.
GC Semi VOA		
	U	Analyzed for but not detected.
	E	Compound concentration exceeds the upper level of the calibration range of the instrument for that specific analysis.
	*	Duplicate RPD exceeds control limits
	J	Indicates an estimated value.
	*	LCS or LCSD exceeds the control limits
	*	MS or MSD exceeds the control limits
	*	Surrogate exceeds the control limit
	D	The reported value is from a dilution.

DATA REPORTING QUALIFIERS

Client: STV Incorporated

Job Number: 220-9412-1
Sdg Number: 220-9412

Lab Section	Qualifier	Description
Metals		
	U	Indicates analyzed for but not detected.
	4	MS, MSD: The analyte present in the original sample is 4 times greater than the matrix spike concentration; therefore, control limits are not applicable.
	J	Sample result is greater than the MDL but below the CRDL
	N	Spiked sample recovery is not within control limits.
General Chemistry		
	HF	Field parameter with a holding time of 15 minutes
	U	Indicates analyzed for but not detected.

Chain of Custody Record

SEVERN TRENT **STL**
Severn Trent Laboratories, Inc.

9412

STL 4124 (0901)

Client: STV Inc	Project Manager: Mike Tumalty	Date: 6/19/09	Chain of Custody Number: 351398
Address: 225 Park Ave South	Telephone Number (Area Code)/Fax Number: (212) 614-3369	Lab Number: per BC 6/22 JMD	Page 1 of 1
City: New York; State: NY; Zip Code: 10003	Site Contact: Brian Connolly	Lab Contact: Jill	
Project Name and Location (State): Bordon Ave Bridge, New York	Carrier/Waybill Number:		
Contract/Purchase Order/Quote No:			

Analysis (Attach list if more space is needed)

Sample I.D. No. and Description (Containers for each sample may be combined on one line)	Date	Time	Matrix: Air	Aqueous	Sed.	Soil	Containers & Preservatives: Unpres.	H2SO4	HNO3	HCl	NaOH	ZnAc/NaOH	TCL VOCs	TCL SVOCs	PCBs	Pest/Herb.	PPL METALS	CR (VI)	TCLP	TPHC - DRO/GRO Fingerprint	Fingerprint TPHC	DRO/GRO	RCRA char	per B.C. 6/22/09 - JMD	Special Instructions/ Conditions of Receipt
	6/19/09																								
1) W-Tank		1030											X	X	X		X			X					All Containers in 7.8°C Cooler
2) W-Exc		1000											X	X	X		X			X					All Containers in 7.8°C Cooler
3) S-1		1045											X	X	X	X	X	X	X	X	X	X	X		KB 6/20/09
4) S-2		1115											X	X	X	X	X	X	X	X	X	X	X		

Possible Hazard Identification: ☑ Non-Hazard ☐ Flammable ☐ Skin Irritant ☐ Poison B ☐ Unknown

Sample Disposal: ☐ Return To Client ☐ Disposal By Lab ☐ Archive For _____ Months (A fee may be assessed if samples are retained longer than 1 month)

Turn Around Time Required: ☑ 24 Hours ☐ 48 Hours ☐ 7 Days ☐ 14 Days ☐ 21 Days ☐ Other _____

QC Requirements (Specify): Samples collected by Richard Hart (516) 328-1194 if questio

	Relinquished By	Date	Time	Received By	Date	Time
1.	[signature]	6/19/09	3:05	[signature]	6/19/09	3:05
2.				[signature]	6/20/09	748
3.						

Comments: 0.6°C, 7.8°C gun #1 bags of melted ice.

PASSED RAD SCREEN

DISTRIBUTION: WHITE - Returned to Client with Report; CANARY - Stays with the Sample; PINK - Field Copy

ESTAMERICA CONNECTICUT
RESERVATIVE RECORD

Job Number:
Client:
Client Project:

Lab Number	Preservative	pH	Adjustment (mLs)	pH after Adjustment	Preservative Lot Number	Initials	Date
9412- 01	HNO3	<2	N/A	N/A	N/A	KB	6/20/09
02	↓	<2	↓	↓	↓	↓	↓
01	HCL	<2	↓	↓	↓	↓	↓
02	↓	<2	↓	↓	↓	↓	↓

TestAmerica - Connecticut
Internal Chain-of-Custody

220-9412
STV- Borden Ave Bridge

24 hr TAT

Lab Blank:

QC: Air:

FB:

Soil: 3-4 Water: 1-2

Date Received: 6/20/09

Sample #s: 1-4

Locations: 99D, R-11, A5, R-22

Laboratory Sample #	Signature-Sample Removal	Date	Time	Reason	Signature-Sample Return	Date	Time
1-4		6/20/09	1105	Ext.			
3-4		6/20/09	1105	Ext.		6/20/09	1710
3-4		6/20/09	1030	VOA TRIP		6/20/09	1700
3-4	MC	6/22	12:20	MTL		6/22/09	1430
1,2		6/22	13:30	VOA			
3&4		6-22	13:20	EXT		6/22	1510
B-4		6/22	1515	ALK		6/22	1600
3-4		6/23	1025	MOD		6-23	1300
1-2	MC	6/23	10:55	MTL	MC	6/23	13:05
1,2		6/22/09	10:40	pH		6/24/09	12:30

Page 69 of 71

06/29/2009

TestAmerica Form# SMF03300.CT

Login Sample Receipt Check List

Client: STV Incorporated

Job Number: 220-9412-1
SDG Number: 220-9412

Login Number: 9412
Creator: Blocker, Kristina
List Number: 1

List Source: TestAmerica Connecticut

Question	T / F/ NA	Comment
Radioactivity either was not measured or, if measured, is at or below background	True	
The cooler's custody seal, if present, is intact.	True	
The cooler or samples do not appear to have been compromised or tampered with.	True	
Samples were received on ice.	True	7.8C cooler bags of melted ice/water.
Cooler Temperature is acceptable.	False	
Cooler Temperature is recorded.	True	0.6C, 7.8C
COC is present.	True	
COC is filled out in ink and legible.	True	
COC is filled out with all pertinent information.	True	
There are no discrepancies between the sample IDs on the containers and the COC.	True	
Samples are received within Holding Time.	True	
Sample containers have legible labels.	True	
Containers are not broken or leaking.	True	
Sample collection date/times are provided.	True	
Appropriate sample containers are used.	True	
Sample bottles are completely filled.	True	
There is sufficient vol. for all requested analyses, incl. any requested MS/MSDs	True	
VOA sample vials do not have headspace or bubble is <6mm (1/4") in diameter.	True	
If necessary, staff have been informed of any short hold time or quick TAT needs	True	
Multiphasic samples are not present.	True	
Samples do not require splitting or compositing.	True	
Is the Field Sampler's name present on COC?	True	

Login Sample Receipt Check List

Client: STV Incorporated

Job Number: 220-9412-1
SDG Number: 220-9412

Login Number: 9412
Creator: Daughtry, Beth
List Number: 1

List Source: TestAmerica Savannah
List Creation: 06/23/09 10:36 AM

Question	T / F/ NA	Comment
Radioactivity either was not measured or, if measured, is at or below background	N/A	
The cooler's custody seal, if present, is intact.	True	
The cooler or samples do not appear to have been compromised or tampered with.	True	
Samples were received on ice.	True	
Cooler Temperature is acceptable.	True	
Cooler Temperature is recorded.	True	
COC is present.	True	
COC is filled out in ink and legible.	True	
COC is filled out with all pertinent information.	True	
There are no discrepancies between the sample IDs on the containers and the COC.	True	
Samples are received within Holding Time.	True	
Sample containers have legible labels.	True	
Containers are not broken or leaking.	True	
Sample collection date/times are provided.	True	
Appropriate sample containers are used.	True	
Sample bottles are completely filled.	True	
There is sufficient vol. for all requested analyses, incl. any requested MS/MSDs	True	
VOA sample vials do not have headspace or bubble is <6mm (1/4") in diameter.	True	
If necessary, staff have been informed of any short hold time or quick TAT needs	True	
Multiphasic samples are not present.	N/A	
Samples do not require splitting or compositing.	N/A	
Is the Field Sampler's name present on COC?	N/A	

TestAmerica

THE LEADER IN ENVIRONMENTAL TESTING

ANALYTICAL REPORT

Job Number: 220-9412-1

SDG Number: 220-9412

Job Description: Borden Ave Bridge

For:
STV Incorporated
225 Park Avenue South
New York, NY 10003

Attention: Mr. Brian Connolly

Approved for release.
Patty A Meraure
6/29/2009 1:01 PM

Designee for
Jill M Duhancik
Project Manager I
jill.duhancik@testamericainc.com
06/29/2009

The test results in this report meet all NELAP requirements unless specified within the case narrative. Pursuant to NELAP, this report may not be reproduced, except in full, without the written approval of the laboratory. All questions regarding this report should be directed to the TestAmerica Project Manager.

TestAmerica Connecticut Certifications and Approvals: CTDOH PH-047, MADEP CT023, RIDOH A43, NYDOH 10602, NY NELAP 10602, NHDES 2528, NJDEP CT410, ME DOH CT023, UT DOH 2032614458

TestAmerica Laboratories, Inc.
TestAmerica Connecticut 128 Long Hill Cross Road, Shelton, CT 06484
Tel (203) 929-8140 Fax (203) 929-8142 www.testamericainc.com

ACCREDITED IN ACCORDANCE WITH nelac

Case Narrative for Job: 220-9412-1

Client: STV Incorporated
Date: June 29, 2009

I certify that this data package is in compliance with the terms and conditions of this contract, both technically and for completeness, for other than the conditions detailed above. Release of the data contained in this hardcopy data package and in the computer-readable data submitted on diskette has been authorized by the Laboratory Manager or his designee, as verified by the following signature.

Lawrence Decker
Laboratory Director

June 29, 2009
Date

Job Narrative
220-J9412-1

Comments
No additional comments.

Receipt
Method(s) 8015B: The container label for the following samples did not match the information listed on the Chain-of-Custody (COC): S-1 (220-9412-3), S-2 (220-9412-4). The container labels list S-2 is on the container label time list 11:15 and S-1 is listed on the container cap while the COC lists ?. There are two samples a- 3 and a - 4, both times list 11:15 June 19 2009 and both labels list S-2 as the sample IDS. One cap list S-1 and the other cap list S-2.

All other samples were received in good condition within temperature requirements.

GC/MS VOA
Method(s) 8260B: Surrogate recovery for the following sample was outside control limits: S-1 (220-9412-3). Evidence of matrix interference is present; re-analysis was performed and confirmed. The first set of data was reported.

No other analytical or quality issues were noted.

GC/MS Semi VOA
Method(s) 8270C: Internal standard (ISTD) response for the following sample was outside control limits: W-TANK (220-9412-1). The sample was re-analyzed with concurring results. The original set of data has been reported.

No other analytical or quality issues were noted.

GC VOA
No analytical or quality issues were noted.

GC Semi VOA
Method(s) 8015B: The laboratory analyzes the following compounds for fingerprint analysis: #2 Fuel Oil, #4 Fuel Oil, #6 Fuel Oil, Kerosene, Gasoline, Motor Oil, and Coal Tar. The elution pattern present in the client's samples are compared to these standards to determine the best match. The carbon range for the following samples is between a #6 Fuel Oil and motor oil, however, because of differences of such magnitude, it is impossible to determine whether the unknown is a combination of the two or a completely different oil:S-1 (220-9412-3), S-2 (220-9412-4), W-EXC (220-9412-2), W-TANK (220-9412-1)

Method(s) 8081A: The capping continuing calibration verification (CCV) analyzed on 6/23/09 on GC-hp-6890-8 failed on both columns. These samples were analyzed in another bracket with concurring results.

Method(s) 8081A: The continuing calibration verification (CCV) for 6/24/09 recovered above the upper control limit. The samples associated with this CCV were non-detects for the affected analytes; therefore, the data have been reported.

No other analytical or quality issues were noted.

Metals
No analytical or quality issues were noted.

General Chemistry
Method(s) 9045C: This analysis is normally performed in the field and has a method-defined holding time of 15 minutes. All associated samples have been qualified with the "HF" flag to indicate they were performed in the laboratory outside the 15 minute timeframe.

No other analytical or quality issues were noted.

Organic Prep
No analytical or quality issues were noted.

VOA Prep
No analytical or quality issues were noted.

EXECUTIVE SUMMARY - Detections

Client: STV Incorporated

Job Number: 220-9412-1
Sdg Number: 220-9412

Lab Sample ID / Analyte	Client Sample ID	Result / Qualifier		Reporting Limit	Units	Method
220-9412-1	W-TANK					
Acetone		16	*	10	ug/L	8260B
Acenaphthene		3.6	J	17	ug/L	8270C
Acenaphthylene		2.2	J	17	ug/L	8270C
Anthracene		5.4	J	17	ug/L	8270C
Benzo[a]anthracene		8.6	J	17	ug/L	8270C
Benzo[a]pyrene		5.3	J	17	ug/L	8270C
Benzo[b]fluoranthene		4.4	J	17	ug/L	8270C
Benzo[g,h,i]perylene		6.5	J	17	ug/L	8270C
Benzo[k]fluoranthene		1.7	J	17	ug/L	8270C
Bis(2-ethylhexyl) phthalate		290		17	ug/L	8270C
Chrysene		8.3	J	17	ug/L	8270C
Dibenz(a,h)anthracene		3.1	J	17	ug/L	8270C
Dibenzofuran		2.1	J	17	ug/L	8270C
Fluoranthene		17		17	ug/L	8270C
Fluorene		3.5	J	17	ug/L	8270C
Indeno[1,2,3-cd]pyrene		4.0	J	17	ug/L	8270C
2-Methylnaphthalene		2.5	J	17	ug/L	8270C
Naphthalene		1.9	J	17	ug/L	8270C
Phenanthrene		13	J	17	ug/L	8270C
Pyrene		19		17	ug/L	8270C
Gasoline Range Organics (GRO)-C6-C10		0.018	J	0.050	mg/L	8015B
Diesel Range Organics [C10-C28]		11000		5000	ug/L	8015B
PCB-1242		1.6		0.50	ug/L	8082
PCB-1254		2.3		0.50	ug/L	8082
PCB-1260		2.2		0.50	ug/L	8082
Arsenic		25.8		12.5	ug/L	6020
Cadmium		13.1		12.5	ug/L	6020
Chromium		101		25.0	ug/L	6020
Copper		290		25.0	ug/L	6020
Nickel		126		12.5	ug/L	6020
Lead		280		12.5	ug/L	6020
Antimony		16.2	J	20.0	ug/L	6020
Zinc		506		125	ug/L	6020
Mercury		0.44		0.20	ug/L	7470A

EXECUTIVE SUMMARY - Detections

Client: STV Incorporated

Job Number: 220-9412-1
Sdg Number: 220-9412

Lab Sample ID / Analyte	Client Sample ID	Result / Qualifier		Reporting Limit	Units	Method
220-9412-2	W-EXC					
Acetone		6.2	J *	10	ug/L	8260B
Acenaphthene		0.66	J	4.1	ug/L	8270C
Anthracene		0.56	J	4.1	ug/L	8270C
Benzo[a]anthracene		0.74	J	4.1	ug/L	8270C
Benzo[a]pyrene		0.60	J	4.1	ug/L	8270C
Benzo[b]fluoranthene		0.52	J	4.1	ug/L	8270C
Benzo[g,h,i]perylene		1.6	J	4.1	ug/L	8270C
Bis(2-ethylhexyl) phthalate		17		4.1	ug/L	8270C
Chrysene		0.66	J	4.1	ug/L	8270C
Di-n-butyl phthalate		0.40	J	4.1	ug/L	8270C
Fluoranthene		1.7	J	4.1	ug/L	8270C
Fluorene		0.57	J	4.1	ug/L	8270C
Indeno[1,2,3-cd]pyrene		0.92	J	4.1	ug/L	8270C
Naphthalene		0.38	J	4.1	ug/L	8270C
Phenanthrene		1.4	J	4.1	ug/L	8270C
Pyrene		2.2	J	4.1	ug/L	8270C
Diesel Range Organics [C10-C28]		890		500	ug/L	8015B
Arsenic		7.3	J	12.5	ug/L	6020
Chromium		18.4	J	25.0	ug/L	6020
Copper		54.8		25.0	ug/L	6020
Nickel		30.0		12.5	ug/L	6020
Lead		47.0		12.5	ug/L	6020
Zinc		103	J	125	ug/L	6020

EXECUTIVE SUMMARY - Detections

Client: STV Incorporated

Job Number: 220-9412-1
Sdg Number: 220-9412

Lab Sample ID / Analyte	Client Sample ID	Result / Qualifier		Reporting Limit	Units	Method
220-9412-3	S-1					
Acetone		210	J *	230	ug/Kg	8260B
Benzene		27	J	57	ug/Kg	8260B
Carbon disulfide		11	J	57	ug/Kg	8260B
Ethylbenzene		50	J	57	ug/Kg	8260B
Methylene Chloride		100	J B	230	ug/Kg	8260B
1,1,2,2-Tetrachloroethane		390		57	ug/Kg	8260B
Xylenes, Total		300		57	ug/Kg	8260B
Acenaphthene		2000	J	12000	ug/Kg	8270C
Anthracene		5000	J	12000	ug/Kg	8270C
Benzo[a]anthracene		6200	J	12000	ug/Kg	8270C
Benzo[a]pyrene		6400	J	12000	ug/Kg	8270C
Benzo[b]fluoranthene		5000	J	12000	ug/Kg	8270C
Benzo[g,h,i]perylene		11000	J	12000	ug/Kg	8270C
Benzo[k]fluoranthene		1900	J	12000	ug/Kg	8270C
Bis(2-ethylhexyl) phthalate		130000		12000	ug/Kg	8270C
Chrysene		6900	J	12000	ug/Kg	8270C
Dibenz(a,h)anthracene		11000	J	12000	ug/Kg	8270C
Dibenzofuran		1500	J	12000	ug/Kg	8270C
Fluoranthene		12000	J	12000	ug/Kg	8270C
Fluorene		2800	J	12000	ug/Kg	8270C
Indeno[1,2,3-cd]pyrene		14000		12000	ug/Kg	8270C
2-Methylnaphthalene		6000	J	12000	ug/Kg	8270C
Naphthalene		3300	J	12000	ug/Kg	8270C
Phenanthrene		14000		12000	ug/Kg	8270C
Pyrene		19000		12000	ug/Kg	8270C
Gasoline Range Organics (GRO)-C6-C10		28		11	mg/Kg	8015B
Diesel Range Organics [C10-C28]		5100000		960000	ug/Kg	8015B
4,4'-DDD		310		38	ug/Kg	8081A
4,4'-DDE		130		38	ug/Kg	8081A
4,4'-DDT		410	*	38	ug/Kg	8081A
Aldrin		6.4	J	19	ug/Kg	8081A
beta-BHC		18	J	19	ug/Kg	8081A
Dieldrin		180		38	ug/Kg	8081A
Endrin		270		38	ug/Kg	8081A
Endrin aldehyde		75		38	ug/Kg	8081A
Endrin ketone		76		38	ug/Kg	8081A
Heptachlor		41		19	ug/Kg	8081A
Heptachlor epoxide		27		19	ug/Kg	8081A
Methoxychlor		96	J *	190	ug/Kg	8081A
alpha-Chlordane		61		19	ug/Kg	8081A
gamma-Chlordane		94		19	ug/Kg	8081A
PCB-1242		590		77	ug/Kg	8082
PCB-1254		520		77	ug/Kg	8082
PCB-1260		760		77	ug/Kg	8082
Silver		11.2		1.0	mg/Kg	6020
Arsenic		45.6		1.0	mg/Kg	6020
Beryllium		0.70	J	1.0	mg/Kg	6020
Cadmium		51.6		1.0	mg/Kg	6020

EXECUTIVE SUMMARY - Detections

Client: STV Incorporated

Job Number: 220-9412-1
Sdg Number: 220-9412

Lab Sample ID / Client Sample ID / Analyte	Result / Qualifier		Reporting Limit	Units	Method
Chromium	342		2.0	mg/Kg	6020
Copper	974		2.0	mg/Kg	6020
Nickel	392		1.0	mg/Kg	6020
Lead	607		1.0	mg/Kg	6020
Antimony	8.5		1.6	mg/Kg	6020
Selenium	8.8		2.0	mg/Kg	6020
Thallium	0.56	J	1.4	mg/Kg	6020
Zinc	1350		10	mg/Kg	6020
Mercury	2.4		0.55	mg/Kg	7471A
Ignitability	neg		2.2	mm/sec	1030
Temperature	1890		1.00	Fahrenheit	1030
Sulfide, Reactive	372		20.0	mg/Kg	9034
pH	8.52	HF	0.100	SU	9045C
Percent Moisture	56.4		0.10	%	Moisture
Percent Solids	43.6		0.10	%	Moisture
TCLP					
Methyl Ethyl Ketone	0.0084	J B	0.010	mg/L	8260B
Benzene	0.00082	J	0.0050	mg/L	8260B
Arsenic	0.064	J	0.075	mg/L	6010B
Barium	0.33		0.025	mg/L	6010B
Chromium	0.023	J	0.025	mg/L	6010B

EXECUTIVE SUMMARY - Detections

Client: STV Incorporated

Job Number: 220-9412-1
Sdg Number: 220-9412

Lab Sample ID / Analyte	Client Sample ID	Result / Qualifier		Reporting Limit	Units	Method
220-9412-4	S-2					
Acetone		340	*	220	ug/Kg	8260B
Benzene		10	J	54	ug/Kg	8260B
Carbon disulfide		20	J	54	ug/Kg	8260B
Ethylbenzene		19	J	54	ug/Kg	8260B
Methylene Chloride		98	J B	220	ug/Kg	8260B
Toluene		2.4	J B	54	ug/Kg	8260B
Xylenes, Total		90		54	ug/Kg	8260B
Acenaphthene		2400	J	12000	ug/Kg	8270C
Acenaphthylene		2100	J	12000	ug/Kg	8270C
Anthracene		7500	J	12000	ug/Kg	8270C
Benzo[a]anthracene		8900	J	12000	ug/Kg	8270C
Benzo[a]pyrene		7200	J	12000	ug/Kg	8270C
Benzo[b]fluoranthene		5300	J	12000	ug/Kg	8270C
Benzo[g,h,i]perylene		11000	J	12000	ug/Kg	8270C
Benzo[k]fluoranthene		1800	J	12000	ug/Kg	8270C
Bis(2-ethylhexyl) phthalate		110000		12000	ug/Kg	8270C
Chrysene		9200	J	12000	ug/Kg	8270C
Dibenz(a,h)anthracene		11000	J	12000	ug/Kg	8270C
Dibenzofuran		1400	J	12000	ug/Kg	8270C
Fluoranthene		15000		12000	ug/Kg	8270C
Fluorene		1700	J	12000	ug/Kg	8270C
Indeno[1,2,3-cd]pyrene		14000		12000	ug/Kg	8270C
2-Methylnaphthalene		2200	J	12000	ug/Kg	8270C
Naphthalene		2900	J	12000	ug/Kg	8270C
Phenanthrene		8700	J	12000	ug/Kg	8270C
Pyrene		21000		12000	ug/Kg	8270C
Gasoline Range Organics (GRO)-C6-C10		50		11	mg/Kg	8015B
Diesel Range Organics [C10-C28]		7000000		3600000	ug/Kg	8015B
4,4'-DDD		120		14	ug/Kg	8081A
4,4'-DDE		66		14	ug/Kg	8081A
4,4'-DDT		260	*	14	ug/Kg	8081A
alpha-BHC		3.0	J	7.3	ug/Kg	8081A
beta-BHC		8.3		7.3	ug/Kg	8081A
Dieldrin		74		14	ug/Kg	8081A
Endrin		200		14	ug/Kg	8081A
Endrin aldehyde		46		14	ug/Kg	8081A
Endrin ketone		43		14	ug/Kg	8081A
Heptachlor		26		7.3	ug/Kg	8081A
Heptachlor epoxide		11		7.3	ug/Kg	8081A
Methoxychlor		61	J *	73	ug/Kg	8081A
alpha-Chlordane		31		7.3	ug/Kg	8081A
gamma-Chlordane		32		7.3	ug/Kg	8081A
PCB-1242		720		180	ug/Kg	8082
PCB-1254		1100		180	ug/Kg	8082
PCB-1260		890		180	ug/Kg	8082
Silver		19.5		0.74	mg/Kg	6020
Arsenic		34.0		0.74	mg/Kg	6020
Beryllium		0.80		0.74	mg/Kg	6020

EXECUTIVE SUMMARY - Detections

Client: STV Incorporated

Job Number: 220-9412-1
Sdg Number: 220-9412

Lab Sample ID / Client Sample ID / Analyte	Result / Qualifier		Reporting Limit	Units	Method
Cadmium	104		0.74	mg/Kg	6020
Chromium	530		1.5	mg/Kg	6020
Copper	1450		1.5	mg/Kg	6020
Nickel	337		0.74	mg/Kg	6020
Lead	1370		0.74	mg/Kg	6020
Antimony	7.3		1.2	mg/Kg	6020
Selenium	5.0		1.5	mg/Kg	6020
Thallium	0.31	J	1.0	mg/Kg	6020
Zinc	2240		7.4	mg/Kg	6020
Mercury	2.6		0.54	mg/Kg	7471A
Ignitability	neg		2.2	mm/sec	1030
Temperature	1890		1.00	Fahrenheit	1030
Sulfide, Reactive	644		19.9	mg/Kg	9034
pH	8.34	HF	0.100	SU	9045C
Percent Moisture	53.7		0.10	%	Moisture
Percent Solids	46.3		0.10	%	Moisture
TCLP					
Methyl Ethyl Ketone	0.0085	J B	0.010	mg/L	8260B
Benzene	0.0018	J	0.0050	mg/L	8260B
Heptachlor	0.000042	J	0.00025	mg/L	8081A
Barium	0.34		0.025	mg/L	6010B
Chromium	0.038		0.025	mg/L	6010B

METHOD SUMMARY

Client: STV Incorporated

Job Number: 220-9412-1
Sdg Number: 220-9412

Description	Lab Location	Method	Preparation Method
Matrix Solid			
Volatile Organic Compounds (GC/MS)	TAL CT	SW846 8260B	
TCLP Extraction	TAL CT		SW846 1311
Purge and Trap	TAL CT		SW846 5030B
Semivolatile Compounds by Gas Chromatography/Mass Spectrometry (GC/MS)	TAL CT	SW846 8270C	
TCLP Extraction	TAL CT		SW846 1311
Liquid-Liquid Extraction (Separatory Funnel)	TAL CT		SW846 3510C
Automated Soxhlet Extraction	TAL CT		SW846 3541
Gasoline Range Organics - (GC)	TAL SAV	SW846 8015B	
Purge and Trap	TAL SAV		SW846 5030A
Diesel Range Organics (DRO) (GC)	TAL CT	SW846 8015B	
Hydrocarbon Product Identification (GC)	TAL CT	SW846 8015B	
Ultrasonic Extraction	TAL CT		SW846 3550B
Ultrasonic Extraction	TAL CT		SW846 3550B
Organochlorine Pesticides (GC)	TAL CT	SW846 8081A	
TCLP Extraction	TAL CT		SW846 1311
Liquid-Liquid Extraction (Separatory Funnel)	TAL CT		SW846 3510C
Ultrasonic Extraction	TAL CT		SW846 3550B
Polychlorinated Biphenyls (PCBs) by Gas Chromatography	TAL CT	SW846 8082	
Ultrasonic Extraction	TAL CT		SW846 3550B
Herbicides (GC)	TAL SAV	SW846 8151A	
TCLP Extraction	TAL SAV		SW846 1311
Extraction (Herbicides)	TAL SAV		SW846 8151A
Metals (ICP)	TAL CT	SW846 6010B	
TCLP Extraction	TAL CT		SW846 1311
Preparation, Total Metals	TAL CT		SW846 3010A
Metals (ICP/MS)	TAL CT	SW846 6020	
Preparation, Metals	TAL CT		SW846 3050B
Mercury (CVAA)	TAL CT	SW846 7470A	
TCLP Extraction	TAL CT		SW846 1311
Preparation, Mercury	TAL CT		SW846 7470A
Mercury (CVAA)	TAL CT	SW846 7471A	
Preparation, Mercury	TAL CT		SW846 7471A
Ignitability, Solids	TAL CT	SW846 1030	
Chromium, Hexavalent	TAL SAV	SW846 7196A	
Alkaline Digestion (Chromium, Hexavalent)	TAL SAV		SW846 3060A
Cyanide, Reactive	TAL CT	SW846 9012	
Cyanide, Reactive	TAL CT		SW846 7.3.3
Sulfide, Reactive	TAL CT	SW846 9034	
Sulfide, Reactive	TAL CT		SW846 7.3.4

METHOD SUMMARY

Client: STV Incorporated

Job Number: 220-9412-1
Sdg Number: 220-9412

Description	Lab Location	Method	Preparation Method
Matrix Solid			
pH	TAL CT	SW846 9045C	
Percent Moisture	TAL CT	EPA Moisture	
Matrix Water			
Volatile Organic Compounds (GC/MS)	TAL CT	SW846 8260B	
Purge and Trap	TAL CT		SW846 5030B
Semivolatile Compounds by Gas Chromatography/Mass Spectrometry (GC/MS)	TAL CT	SW846 8270C	
Liquid-Liquid Extraction (Separatory Funnel)	TAL CT		SW846 3510C
Gasoline Range Organics - (GC)	TAL SAV	SW846 8015B	
Purge and Trap	TAL SAV		SW846 5030B
Diesel Range Organics (DRO) (GC)	TAL CT	SW846 8015B	
Hydrocarbon Product Identification (GC)	TAL CT	SW846 8015B	
Liquid-Liquid Extraction (Separatory Funnel)	TAL CT		SW846 3510C
Liquid-Liquid Extraction (Separatory Funnel)	TAL CT		SW846 3510C
Polychlorinated Biphenyls (PCBs) by Gas Chromatography	TAL CT	SW846 8082	
Liquid-Liquid Extraction (Separatory Funnel)	TAL CT		SW846 3510C
Metals (ICP/MS)	TAL CT	SW846 6020	
Preparation, Total Metals	TAL CT		SW846 3010A
Mercury (CVAA)	TAL CT	SW846 7470A	
Preparation, Mercury	TAL CT		SW846 7470A

Lab References:

TAL CT = TestAmerica Connecticut

TAL SAV = TestAmerica Savannah

Method References:

EPA = US Environmental Protection Agency

SW846 = "Test Methods For Evaluating Solid Waste, Physical/Chemical Methods", Third Edition, November 1986 And Its Updates.

METHOD / ANALYST SUMMARY

Client: STV Incorporated

Job Number: 220-9412-1
Sdg Number: 220-9412

Method	Analyst	Analyst ID
SW846 8260B	Kostrzewska, Barbara	BK
SW846 8260B	Paveglio, Peter R	PRP
SW846 8270C	Jonas, Stephan	SJ
SW846 8015B	Moncrief, Amy	AM
SW846 8015B	Widomski, Sarah	SW
SW846 8081A	Cooper, Susan	SC
SW846 8082	Smith, Karli	KS
SW846 8151A	Kellar, Joshua	JK
SW846 6010B	Petronchak, Nestor	NP
SW846 6020	Petronchak, Nestor	NP
SW846 7470A	Voytek, Joseph F	JFV
SW846 7471A	Voytek, Joseph F	JFV
SW846 1030	Tillotson, Ray	RT
SW846 7196A	Ross, Jon	JR
SW846 9012	Natoli, Richard A	RN
SW846 9034	Natoli, Richard A	RN
SW846 9045C	Mendoza, Julia	JM
EPA Moisture	Capece, Bill	BC

SAMPLE SUMMARY

Client: STV Incorporated

Job Number: 220-9412-1
Sdg Number: 220-9412

Lab Sample ID	Client Sample ID	Client Matrix	Date/Time Sampled	Date/Time Received
220-9412-1	W-TANK	Water	06/19/2009 1030	06/20/2009 0748
220-9412-2	W-EXC	Water	06/19/2009 1000	06/20/2009 0748
220-9412-3	S-1	Solid	06/19/2009 1045	06/20/2009 0748
220-9412-4	S-2	Solid	06/19/2009 1115	06/20/2009 0748

SAMPLE RESULTS

Client: STV Incorporated

Job Number: 220-9412-1
Sdg Number: 220-9412

Client Sample ID: **W-TANK**

Lab Sample ID: 220-9412-1
Client Matrix: Water

Date Sampled: 06/19/2009 1030
Date Received: 06/20/2009 0748

8260B Volatile Organic Compounds (GC/MS)

Method: 8260B
Preparation: 5030B
Dilution: 1.0
Date Analyzed: 06/22/2009 1416
Date Prepared: 06/22/2009 1416

Analysis Batch: 220-28342

Instrument ID: HP 5890/5971 GC/MS
Lab File ID: L5665.D
Initial Weight/Volume: 5 mL
Final Weight/Volume: 5 mL

Analyte	Result (ug/L)	Qualifier	MDL	RL
Acetone	16	*	1.0	10
Benzene	5.0	U	0.74	5.0
Bromodichloromethane	5.0	U	0.48	5.0
Bromoform	5.0	U	0.46	5.0
Bromomethane	5.0	U	2.1	5.0
Methyl Ethyl Ketone	10	U *	1.1	10
Carbon disulfide	5.0	U	0.90	5.0
Carbon tetrachloride	5.0	U	1.1	5.0
Chlorobenzene	5.0	U	0.72	5.0
Chloroethane	5.0	U	1.1	5.0
Chloroform	5.0	U	0.67	5.0
Chloromethane	5.0	U	1.1	5.0
Dibromochloromethane	5.0	U	0.55	5.0
1,1-Dichloroethane	5.0	U	1.0	5.0
1,2-Dichloroethane	5.0	U	0.72	5.0
1,1-Dichloroethene	5.0	U	0.83	5.0
1,2-Dichloropropane	5.0	U	0.71	5.0
cis-1,3-Dichloropropene	5.0	U	0.28	5.0
trans-1,3-Dichloropropene	5.0	U	0.57	5.0
Ethylbenzene	5.0	U	0.87	5.0
2-Hexanone	10	U	1.1	10
Methylene Chloride	5.0	U	0.78	5.0
methyl isobutyl ketone	10	U	0.38	10
Styrene	5.0	U	0.64	5.0
1,1,2,2-Tetrachloroethane	5.0	U	0.81	5.0
Tetrachloroethene	5.0	U	0.81	5.0
Toluene	5.0	U	0.72	5.0
1,1,1-Trichloroethane	5.0	U	0.69	5.0
1,1,2-Trichloroethane	5.0	U	0.65	5.0
Trichloroethene	5.0	U	0.62	5.0
Vinyl chloride	5.0	U	0.99	5.0
Xylenes, Total	5.0	U	2.3	5.0
cis-1,2-Dichloroethene	5.0	U	0.99	5.0
trans-1,2-Dichloroethene	5.0	U	0.76	5.0

Surrogate	%Rec	Acceptance Limits
1,2-Dichloroethane-d4 (Surr)	113	65 - 136
4-Bromofluorobenzene	115	51 - 142
Dibromofluoromethane	112	68 - 132
Toluene-d8 (Surr)	117	63 - 127

Client: STV Incorporated

Job Number: 220-9412-1
Sdg Number: 220-9412

Client Sample ID: **W-EXC**

Lab Sample ID: 220-9412-2
Client Matrix: Water

Date Sampled: 06/19/2009 1000
Date Received: 06/20/2009 0748

8260B Volatile Organic Compounds (GC/MS)

Method: 8260B
Preparation: 5030B
Dilution: 1.0
Date Analyzed: 06/22/2009 1352
Date Prepared: 06/22/2009 1352

Analysis Batch: 220-28342

Instrument ID: HP 5890/5971 GC/MS
Lab File ID: L5664.D
Initial Weight/Volume: 5 mL
Final Weight/Volume: 5 mL

Analyte	Result (ug/L)	Qualifier	MDL	RL
Acetone	6.2	J *	1.0	10
Benzene	5.0	U	0.74	5.0
Bromodichloromethane	5.0	U	0.48	5.0
Bromoform	5.0	U	0.46	5.0
Bromomethane	5.0	U	2.1	5.0
Methyl Ethyl Ketone	10	U *	1.1	10
Carbon disulfide	5.0	U	0.90	5.0
Carbon tetrachloride	5.0	U	1.1	5.0
Chlorobenzene	5.0	U	0.72	5.0
Chloroethane	5.0	U	1.1	5.0
Chloroform	5.0	U	0.67	5.0
Chloromethane	5.0	U	1.1	5.0
Dibromochloromethane	5.0	U	0.55	5.0
1,1-Dichloroethane	5.0	U	1.0	5.0
1,2-Dichloroethane	5.0	U	0.72	5.0
1,1-Dichloroethene	5.0	U	0.83	5.0
1,2-Dichloropropane	5.0	U	0.71	5.0
cis-1,3-Dichloropropene	5.0	U	0.28	5.0
trans-1,3-Dichloropropene	5.0	U	0.57	5.0
Ethylbenzene	5.0	U	0.87	5.0
2-Hexanone	10	U	1.1	10
Methylene Chloride	5.0	U	0.78	5.0
methyl isobutyl ketone	10	U	0.38	10
Styrene	5.0	U	0.64	5.0
1,1,2,2-Tetrachloroethane	5.0	U	0.81	5.0
Tetrachloroethene	5.0	U	0.81	5.0
Toluene	5.0	U	0.72	5.0
1,1,1-Trichloroethane	5.0	U	0.69	5.0
1,1,2-Trichloroethane	5.0	U	0.65	5.0
Trichloroethene	5.0	U	0.62	5.0
Vinyl chloride	5.0	U	0.99	5.0
Xylenes, Total	5.0	U	2.3	5.0
cis-1,2-Dichloroethene	5.0	U	0.99	5.0
trans-1,2-Dichloroethene	5.0	U	0.76	5.0

Surrogate	%Rec	Acceptance Limits
1,2-Dichloroethane-d4 (Surr)	113	65 - 136
4-Bromofluorobenzene	119	51 - 142
Dibromofluoromethane	114	68 - 132
Toluene-d8 (Surr)	115	63 - 127

Client: STV Incorporated

Job Number: 220-9412-1
Sdg Number: 220-9412

Client Sample ID: **S-1**

Lab Sample ID: 220-9412-3
Client Matrix: Solid

Date Sampled: 06/19/2009 1045
Date Received: 06/20/2009 0748

8260B Volatile Organic Compounds (GC/MS)-TCLP

Method: 8260B
Preparation: 5030B
Dilution: 1.0
Date Analyzed: 06/23/2009 1311
Date Prepared: 06/23/2009 1311
Date Leached: 06/22/2009 1032

Analysis Batch: 220-28395

Leachate Batch: 220-28315

Instrument ID: HP 6890/5973 GC/MS
Lab File ID: W6282.D
Initial Weight/Volume: 5 mL
Final Weight/Volume: 5 mL

Analyte	DryWt Corrected: N	Result (mg/L)	Qualifier	MDL	RL
Vinyl chloride		0.0050	U	0.00098	0.0050
1,1-Dichloroethene		0.0050	U	0.00083	0.0050
Methyl Ethyl Ketone		0.0084	J B	0.0011	0.010
Chloroform		0.0050	U	0.00067	0.0050
Carbon tetrachloride		0.0050	U	0.0011	0.0050
Benzene		0.00082	J	0.00074	0.0050
1,2-Dichloroethane		0.0050	U	0.00072	0.0050
Trichloroethene		0.0050	U	0.00062	0.0050
Tetrachloroethene		0.0050	U	0.00081	0.0050
Chlorobenzene		0.0050	U	0.00072	0.0050

Surrogate	%Rec	Acceptance Limits
1,2-Dichloroethane-d4 (Surr)	102	65 - 136
4-Bromofluorobenzene	108	51 - 142
Dibromofluoromethane	98	68 - 132
Toluene-d8 (Surr)	104	63 - 127

Client: STV Incorporated

Job Number: 220-9412-1
Sdg Number: 220-9412

Client Sample ID: S-1

Lab Sample ID: 220-9412-3
Client Matrix: Solid

% Moisture: 56.4

Date Sampled: 06/19/2009 1045
Date Received: 06/20/2009 0748

8260B Volatile Organic Compounds (GC/MS)

Method: 8260B
Preparation: 5030B
Dilution: 5.0
Date Analyzed: 06/22/2009 1640
Date Prepared: 06/22/2009 1640

Analysis Batch: 220-28348

Instrument ID: HP 5890/5971A GC/MS
Lab File ID: O1277.D
Initial Weight/Volume: 5 g
Final Weight/Volume: 5 mL

Analyte	DryWt Corrected: Y	Result (ug/Kg)	Qualifier	MDL	RL
Acetone		210	J *	26	230
Benzene		27	J	6.5	57
Bromodichloromethane		57	U	3.4	57
Bromoform		57	U	7.0	57
Bromomethane		57	U	24	57
Methyl Ethyl Ketone		110	U	18	110
Carbon disulfide		11	J	4.7	57
Carbon tetrachloride		57	U	11	57
Chlorobenzene		57	U	6.8	57
Chloroethane		57	U	11	57
Chloroform		57	U	3.9	57
Chloromethane		57	U	8.9	57
Dibromochloromethane		57	U	4.0	57
1,1-Dichloroethane		57	U	3.4	57
1,2-Dichloroethane		57	U	6.6	57
1,1-Dichloroethene		57	U	6.6	57
1,2-Dichloropropane		57	U	7.7	57
cis-1,3-Dichloropropene		57	U	6.4	57
trans-1,3-Dichloropropene		57	U	3.1	57
Ethylbenzene		50	J	8.0	57
2-Hexanone		110	U	14	110
Methylene Chloride		100	J B	12	230
methyl isobutyl ketone		57	U	6.3	57
Styrene		57	U	1.7	57
1,1,2,2-Tetrachloroethane		390		6.0	57
Tetrachloroethene		57	U	9.3	57
Toluene		57	U	0.85	57
1,1,1-Trichloroethane		57	U	6.1	57
1,1,2-Trichloroethane		57	U	4.2	57
Trichloroethene		57	U	9.3	57
Vinyl chloride		57	U	2.6	57
Xylenes, Total		300		5.6	57
cis-1,2-Dichloroethene		57	U	4.2	57
trans-1,2-Dichloroethene		57	U	4.5	57

Surrogate	%Rec		Acceptance Limits
1,2-Dichloroethane-d4 (Surr)	73		59 - 132
4-Bromofluorobenzene	102		34 - 124
Dibromofluoromethane	64		59 - 123
Toluene-d8 (Surr)	43	*	50 - 118

Client: STV Incorporated

Job Number: 220-9412-1
Sdg Number: 220-9412

Client Sample ID: **S-2**

Lab Sample ID: 220-9412-4
Client Matrix: Solid

Date Sampled: 06/19/2009 1115
Date Received: 06/20/2009 0748

8260B Volatile Organic Compounds (GC/MS)-TCLP

Method: 8260B
Preparation: 5030B
Dilution: 1.0
Date Analyzed: 06/23/2009 1335
Date Prepared: 06/23/2009 1335
Date Leached: 06/22/2009 1032

Analysis Batch: 220-28395
Leachate Batch: 220-28315

Instrument ID: HP 6890/5973 GC/MS
Lab File ID: W6283.D
Initial Weight/Volume: 5 mL
Final Weight/Volume: 5 mL

Analyte	DryWt Corrected: N	Result (mg/L)	Qualifier	MDL	RL
Vinyl chloride		0.0050	U	0.00098	0.0050
1,1-Dichloroethene		0.0050	U	0.00083	0.0050
Methyl Ethyl Ketone		0.0085	J B	0.0011	0.010
Chloroform		0.0050	U	0.00067	0.0050
Carbon tetrachloride		0.0050	U	0.0011	0.0050
Benzene		0.0018	J	0.00074	0.0050
1,2-Dichloroethane		0.0050	U	0.00072	0.0050
Trichloroethene		0.0050	U	0.00062	0.0050
Tetrachloroethene		0.0050	U	0.00081	0.0050
Chlorobenzene		0.0050	U	0.00072	0.0050

Surrogate	%Rec	Acceptance Limits
1,2-Dichloroethane-d4 (Surr)	102	65 - 136
4-Bromofluorobenzene	108	51 - 142
Dibromofluoromethane	96	68 - 132
Toluene-d8 (Surr)	104	63 - 127

Client: STV Incorporated

Job Number: 220-9412-1
Sdg Number: 220-9412

Client Sample ID: **S-2**

Lab Sample ID: 220-9412-4
Client Matrix: Solid
% Moisture: 53.7
Date Sampled: 06/19/2009 1115
Date Received: 06/20/2009 0748

8260B Volatile Organic Compounds (GC/MS)

Method: 8260B
Preparation: 5030B
Dilution: 5.0
Date Analyzed: 06/22/2009 1705
Date Prepared: 06/22/2009 1705
Analysis Batch: 220-28348
Instrument ID: HP 5890/5971A GC/MS
Lab File ID: O1278.D
Initial Weight/Volume: 5 g
Final Weight/Volume: 5 mL

Analyte	DryWt Corrected: Y	Result (ug/Kg)	Qualifier	MDL	RL
Acetone		340	*	24	220
Benzene		10	J	6.2	54
Bromodichloromethane		54	U	3.2	54
Bromoform		54	U	6.6	54
Bromomethane		54	U	22	54
Methyl Ethyl Ketone		110	U	17	110
Carbon disulfide		20	J	4.4	54
Carbon tetrachloride		54	U	10	54
Chlorobenzene		54	U	6.4	54
Chloroethane		54	U	11	54
Chloroform		54	U	3.7	54
Chloromethane		54	U	8.4	54
Dibromochloromethane		54	U	3.8	54
1,1-Dichloroethane		54	U	3.2	54
1,2-Dichloroethane		54	U	6.3	54
1,1-Dichloroethene		54	U	6.3	54
1,2-Dichloropropane		54	U	7.2	54
cis-1,3-Dichloropropene		54	U	6.0	54
trans-1,3-Dichloropropene		54	U	2.9	54
Ethylbenzene		19	J	7.6	54
2-Hexanone		110	U	13	110
Methylene Chloride		98	J B	12	220
methyl isobutyl ketone		54	U	5.9	54
Styrene		54	U	1.6	54
1,1,2,2-Tetrachloroethane		54	U	5.6	54
Tetrachloroethene		54	U	8.7	54
Toluene		2.4	J B	0.80	54
1,1,1-Trichloroethane		54	U	5.7	54
1,1,2-Trichloroethane		54	U	4.0	54
Trichloroethene		54	U	8.7	54
Vinyl chloride		54	U	2.5	54
Xylenes, Total		90		5.2	54
cis-1,2-Dichloroethene		54	U	4.0	54
trans-1,2-Dichloroethene		54	U	4.2	54

Surrogate	%Rec	Acceptance Limits
1,2-Dichloroethane-d4 (Surr)	76	59 - 132
4-Bromofluorobenzene	91	34 - 124
Dibromofluoromethane	73	59 - 123
Toluene-d8 (Surr)	65	50 - 118

Client: STV Incorporated

Job Number: 220-9412-1
Sdg Number: 220-9412

Client Sample ID: **W-TANK**

Lab Sample ID: 220-9412-1
Client Matrix: Water

Date Sampled: 06/19/2009 1030
Date Received: 06/20/2009 0748

8270C Semivolatile Compounds by Gas Chromatography/Mass Spectrometry (GC/MS)

Method: 8270C
Preparation: 3510C
Dilution: 4.0
Date Analyzed: 06/22/2009 1226
Date Prepared: 06/20/2009 1317

Analysis Batch: 220-28334
Prep Batch: 220-28305

Instrument ID: HP 6890/5975
Lab File ID: A5735.D
Initial Weight/Volume: 960 mL
Final Weight/Volume: 1 mL
Injection Volume: 1.0 uL

Analyte	Result (ug/L)	Qualifier	MDL	RL
Acenaphthene	3.6	J	1.3	17
Acenaphthylene	2.2	J	1.4	17
Anthracene	5.4	J	1.2	17
Benzo[a]anthracene	8.6	J	1.2	17
Benzo[a]pyrene	5.3	J	1.5	17
Benzo[b]fluoranthene	4.4	J	1.5	17
Benzo[g,h,i]perylene	6.5	J	1.5	17
Benzo[k]fluoranthene	1.7	J	1.7	17
Bis(2-chloroethoxy)methane	17	U	1.3	17
Bis(2-chloroethyl)ether	17	U	1.2	17
Bis(2-ethylhexyl) phthalate	290		2.3	17
Butyl benzyl phthalate	17	U	1.5	17
Carbazole	17	U	1.4	17
Chrysene	8.3	J	1.0	17
Di-n-butyl phthalate	17	U	1.5	17
Di-n-octyl phthalate	17	U	1.6	17
4-Bromophenyl phenyl ether	17	U	1.8	17
4-Chloroaniline	17	U	1.2	17
2-Chloronaphthalene	17	U	1.6	17
4-Chlorophenyl phenyl ether	17	U	1.5	17
Dibenz(a,h)anthracene	3.1	J	1.6	17
Dibenzofuran	2.1	J	1.8	17
Diethyl phthalate	17	U	1.8	17
Dimethyl phthalate	17	U	1.6	17
1,2-Dichlorobenzene	17	U	1.3	17
1,3-Dichlorobenzene	17	U	1.0	17
1,4-Dichlorobenzene	17	U	1.3	17
3,3'-Dichlorobenzidine	17	U	1.5	17
2,4-Dinitrotoluene	17	U	1.7	17
2,6-Dinitrotoluene	17	U	1.1	17
Fluoranthene	17		1.3	17
Fluorene	3.5	J	1.1	17
Hexachlorobenzene	17	U	1.4	17
Hexachlorobutadiene	17	U	0.83	17
Hexachlorocyclopentadiene	17	U	1.5	17
Hexachloroethane	17	U	1.5	17
Indeno[1,2,3-cd]pyrene	4.0	J	1.2	17
Isophorone	17	U	1.3	17
2-Methylnaphthalene	2.5	J	1.1	17
Naphthalene	1.9	J	1.2	17
2-Nitroaniline	17	U	1.4	17
3-Nitroaniline	17	U	0.96	17
Nitrobenzene	17	U	1.2	17
N-Nitrosodi-n-propylamine	17	U	1.4	17

Client: STV Incorporated

Job Number: 220-9412-1
Sdg Number: 220-9412

Client Sample ID: **W-TANK**

Lab Sample ID: 220-9412-1
Client Matrix: Water

Date Sampled: 06/19/2009 1030
Date Received: 06/20/2009 0748

8270C Semivolatile Compounds by Gas Chromatography/Mass Spectrometry (GC/MS)

Method: 8270C
Preparation: 3510C
Dilution: 4.0
Date Analyzed: 06/22/2009 1226
Date Prepared: 06/20/2009 1317

Analysis Batch: 220-28334
Prep Batch: 220-28305

Instrument ID: HP 6890/5975
Lab File ID: A5735.D
Initial Weight/Volume: 960 mL
Final Weight/Volume: 1 mL
Injection Volume: 1.0 uL

Analyte	Result (ug/L)	Qualifier	MDL	RL
N-Nitrosodiphenylamine	17	U	1.4	17
Phenanthrene	13	J	1.2	17
Pyrene	19		1.4	17
1,2,4-Trichlorobenzene	17	U	1.5	17
4-Chloro-3-methylphenol	21	U	1.4	21
2-Chlorophenol	17	U	0.96	17
2-Methylphenol	17	U	1.0	17
4-Methylphenol	17	U	1.2	17
2,4-Dichlorophenol	17	U	1.4	17
2,4-Dimethylphenol	17	U	1.4	17
2,4-Dinitrophenol	100	U	1.8	100
4,6-Dinitro-2-methylphenol	100	U	7.8	100
2-Nitrophenol	17	U	1.1	17
4-Nitrophenol	42	U	6.0	42
Pentachlorophenol	100	U	1.3	100
Phenol	17	U	0.79	17
2,4,5-Trichlorophenol	42	U	1.2	42
2,4,6-Trichlorophenol	17	U	1.5	17
Benzyl alcohol	17	U	1.7	17
4-Nitroaniline	17	U	0.83	17
2,2'-oxybis[1-chloropropane]	17	U	1.0	17

Surrogate	%Rec	Acceptance Limits
2-Fluorobiphenyl	87	39 - 120
2-Fluorophenol	43	13 - 120
2,4,6-Tribromophenol	76	36 - 120
Nitrobenzene-d5	79	40 - 120
Phenol-d5	35	10 - 120
Terphenyl-d14	68	10 - 120

Client: STV Incorporated

Job Number: 220-9412-1
Sdg Number: 220-9412

Client Sample ID: **W-EXC**

Lab Sample ID: 220-9412-2
Client Matrix: Water

Date Sampled: 06/19/2009 1000
Date Received: 06/20/2009 0748

8270C Semivolatile Compounds by Gas Chromatography/Mass Spectrometry (GC/MS)

Method: 8270C
Preparation: 3510C
Dilution: 1.0
Date Analyzed: 06/22/2009 1107
Date Prepared: 06/20/2009 1317

Analysis Batch: 220-28334
Prep Batch: 220-28305

Instrument ID: HP 6890/5975
Lab File ID: A5732.D
Initial Weight/Volume: 970 mL
Final Weight/Volume: 1 mL
Injection Volume: 1.0 uL

Analyte	Result (ug/L)	Qualifier	MDL	RL
Acenaphthene	0.66	J	0.32	4.1
Acenaphthylene	4.1	U	0.35	4.1
Anthracene	0.56	J	0.30	4.1
Benzo[a]anthracene	0.74	J	0.31	4.1
Benzo[a]pyrene	0.60	J	0.36	4.1
Benzo[b]fluoranthene	0.52	J	0.37	4.1
Benzo[g,h,i]perylene	1.6	J	0.37	4.1
Benzo[k]fluoranthene	4.1	U	0.41	4.1
Bis(2-chloroethoxy)methane	4.1	U	0.32	4.1
Bis(2-chloroethyl)ether	4.1	U	0.30	4.1
Bis(2-ethylhexyl) phthalate	17		0.56	4.1
Butyl benzyl phthalate	4.1	U	0.36	4.1
Carbazole	4.1	U	0.34	4.1
Chrysene	0.66	J	0.26	4.1
Di-n-butyl phthalate	0.40	J	0.36	4.1
Di-n-octyl phthalate	4.1	U	0.39	4.1
4-Bromophenyl phenyl ether	4.1	U	0.45	4.1
4-Chloroaniline	4.1	U	0.30	4.1
2-Chloronaphthalene	4.1	U	0.40	4.1
4-Chlorophenyl phenyl ether	4.1	U	0.36	4.1
Dibenz(a,h)anthracene	4.1	U	0.39	4.1
Dibenzofuran	4.1	U	0.44	4.1
Diethyl phthalate	4.1	U	0.44	4.1
Dimethyl phthalate	4.1	U	0.39	4.1
1,2-Dichlorobenzene	4.1	U	0.32	4.1
1,3-Dichlorobenzene	4.1	U	0.26	4.1
1,4-Dichlorobenzene	4.1	U	0.32	4.1
3,3'-Dichlorobenzidine	4.1	U	0.37	4.1
2,4-Dinitrotoluene	4.1	U	0.41	4.1
2,6-Dinitrotoluene	4.1	U	0.27	4.1
Fluoranthene	1.7	J	0.32	4.1
Fluorene	0.57	J	0.27	4.1
Hexachlorobenzene	4.1	U	0.34	4.1
Hexachlorobutadiene	4.1	U	0.21	4.1
Hexachlorocyclopentadiene	4.1	U	0.36	4.1
Hexachloroethane	4.1	U	0.38	4.1
Indeno[1,2,3-cd]pyrene	0.92	J	0.29	4.1
Isophorone	4.1	U	0.32	4.1
2-Methylnaphthalene	4.1	U	0.28	4.1
Naphthalene	0.38	J	0.31	4.1
2-Nitroaniline	4.1	U	0.35	4.1
3-Nitroaniline	4.1	U	0.24	4.1
Nitrobenzene	4.1	U	0.29	4.1
N-Nitrosodi-n-propylamine	4.1	U	0.34	4.1

Client: STV Incorporated

Job Number: 220-9412-1
Sdg Number: 220-9412

Client Sample ID: **W-EXC**

Lab Sample ID: 220-9412-2
Client Matrix: Water

Date Sampled: 06/19/2009 1000
Date Received: 06/20/2009 0748

8270C Semivolatile Compounds by Gas Chromatography/Mass Spectrometry (GC/MS)

Method: 8270C
Preparation: 3510C
Dilution: 1.0
Date Analyzed: 06/22/2009 1107
Date Prepared: 06/20/2009 1317

Analysis Batch: 220-28334
Prep Batch: 220-28305

Instrument ID: HP 6890/5975
Lab File ID: A5732.D
Initial Weight/Volume: 970 mL
Final Weight/Volume: 1 mL
Injection Volume: 1.0 uL

Analyte	Result (ug/L)	Qualifier	MDL	RL
N-Nitrosodiphenylamine	4.1	U	0.34	4.1
Phenanthrene	1.4	J	0.29	4.1
Pyrene	2.2	J	0.34	4.1
1,2,4-Trichlorobenzene	4.1	U	0.37	4.1
4-Chloro-3-methylphenol	5.2	U	0.35	5.2
2-Chlorophenol	4.1	U	0.24	4.1
2-Methylphenol	4.1	U	0.25	4.1
4-Methylphenol	4.1	U	0.30	4.1
2,4-Dichlorophenol	4.1	U	0.34	4.1
2,4-Dimethylphenol	4.1	U	0.34	4.1
2,4-Dinitrophenol	26	U	0.44	26
4,6-Dinitro-2-methylphenol	26	U	1.9	26
2-Nitrophenol	4.1	U	0.28	4.1
4-Nitrophenol	10	U	1.5	10
Pentachlorophenol	26	U	0.32	26
Phenol	4.1	U	0.20	4.1
2,4,5-Trichlorophenol	10	U	0.29	10
2,4,6-Trichlorophenol	4.1	U	0.38	4.1
Benzyl alcohol	4.1	U	0.42	4.1
4-Nitroaniline	4.1	U	0.21	4.1
2,2'-oxybis[1-chloropropane]	4.1	U	0.26	4.1

Surrogate	%Rec	Acceptance Limits
2-Fluorobiphenyl	73	39 - 120
2-Fluorophenol	37	13 - 120
2,4,6-Tribromophenol	66	36 - 120
Nitrobenzene-d5	71	40 - 120
Phenol-d5	29	10 - 120
Terphenyl-d14	72	10 - 120

Client: STV Incorporated

Job Number: 220-9412-1
Sdg Number: 220-9412

Client Sample ID: **S-1**

Lab Sample ID: 220-9412-3
Client Matrix: Solid

Date Sampled: 06/19/2009 1045
Date Received: 06/20/2009 0748

8270C Semivolatile Compounds by Gas Chromatography/Mass Spectrometry (GC/MS)-TCLP

Method: 8270C
Preparation: 3510C
Dilution: 1.0
Date Analyzed: 06/24/2009 1523
Date Prepared: 06/24/2009 0907
Date Leached: 06/22/2009 1600

Analysis Batch: 220-28470
Prep Batch: 220-28419
Leachate Batch: 220-28369

Instrument ID: HP 6890/5975
Lab File ID: A5794.D
Initial Weight/Volume: 250 mL
Final Weight/Volume: 0.5 mL
Injection Volume: 1.0 uL

Analyte	DryWt Corrected: N	Result (mg/L)	Qualifier	MDL	RL
1,4-Dichlorobenzene		0.020	U	0.00062	0.020
2,4-Dinitrotoluene		0.020	U	0.00080	0.020
2,4,5-Trichlorophenol		0.10	U	0.00056	0.10
2,4,6-Trichlorophenol		0.020	U	0.00074	0.020
2-Methylphenol		0.020	U	0.00048	0.020
Hexachlorobenzene		0.020	U	0.00066	0.020
Hexachlorobutadiene		0.020	U	0.00040	0.020
Hexachloroethane		0.020	U	0.00074	0.020
Nitrobenzene		0.020	U	0.00056	0.020
Pentachlorophenol		0.10	U	0.00062	0.10
Pyridine		0.040	U	0.0077	0.040
4-Methylphenol		0.020	U	0.00058	0.020

Surrogate	%Rec	Acceptance Limits
2,4,6-Tribromophenol	86	29 - 126
2-Fluorobiphenyl	64	43 - 116
2-Fluorophenol	60	21 - 97
Nitrobenzene-d5	68	38 - 113
Terphenyl-d14	92	10 - 119
Phenol-d5	57	18 - 97

Client: STV Incorporated

Job Number: 220-9412-1
Sdg Number: 220-9412

Client Sample ID: S-1

Lab Sample ID: 220-9412-3
Client Matrix: Solid
% Moisture: 56.4

Date Sampled: 06/19/2009 1045
Date Received: 06/20/2009 0748

8270C Semivolatile Compounds by Gas Chromatography/Mass Spectrometry (GC/MS)

Method: 8270C
Preparation: 3541
Dilution: 20
Date Analyzed: 06/23/2009 1228
Date Prepared: 06/20/2009 1110

Analysis Batch: 220-28390
Prep Batch: 220-28293

Instrument ID: HP 6890/5973 GC/MS
Lab File ID: Z11432.D
Initial Weight/Volume: 15.19 g
Final Weight/Volume: 1 mL
Injection Volume: 1.0 uL

Analyte	DryWt Corrected: Y	Result (ug/Kg)	Qualifier	MDL	RL
Acenaphthene		2000	J	720	12000
Acenaphthylene		12000	U	600	12000
Anthracene		5000	J	480	12000
Benzo[a]anthracene		6200	J	430	12000
Benzo[a]pyrene		6400	J	330	12000
Benzo[b]fluoranthene		5000	J	330	12000
Benzo[g,h,i]perylene		11000	J	800	12000
Benzo[k]fluoranthene		1900	J	1100	12000
Bis(2-chloroethoxy)methane		12000	U	570	12000
Bis(2-chloroethyl)ether		12000	U	630	12000
Bis(2-ethylhexyl) phthalate		130000		1200	12000
Butyl benzyl phthalate		12000	U	680	12000
Carbazole		12000	U	680	12000
Chrysene		6900	J	900	12000
Di-n-butyl phthalate		12000	U	1800	12000
Di-n-octyl phthalate		12000	U	690	12000
4-Bromophenyl phenyl ether		12000	U	790	12000
4-Chloroaniline		12000	U	2000	12000
2-Chloronaphthalene		12000	U	520	12000
4-Chlorophenyl phenyl ether		12000	U	900	12000
Dibenz(a,h)anthracene		11000	J	960	12000
Dibenzofuran		1500	J	860	12000
Diethyl phthalate		12000	U	1200	12000
Dimethyl phthalate		12000	U	700	12000
1,2-Dichlorobenzene		12000	U	720	12000
1,3-Dichlorobenzene		12000	U	610	12000
1,4-Dichlorobenzene		12000	U	720	12000
3,3'-Dichlorobenzidine		30000	U	2500	30000
2,4-Dinitrotoluene		12000	U	970	12000
2,6-Dinitrotoluene		12000	U	360	12000
Fluoranthene		12000	J	610	12000
Fluorene		2800	J	730	12000
Hexachlorobenzene		12000	U	850	12000
Hexachlorobutadiene		12000	U	940	12000
Hexachlorocyclopentadiene		30000	U	5700	30000
Hexachloroethane		12000	U	700	12000
Indeno[1,2,3-cd]pyrene		14000		790	12000
Isophorone		12000	U	670	12000
2-Methylnaphthalene		6000	J	350	12000
Naphthalene		3300	J	630	12000
2-Nitroaniline		77000	U	740	77000
3-Nitroaniline		77000	U	390	77000
Nitrobenzene		12000	U	780	12000
N-Nitrosodi-n-propylamine		12000	U	820	12000

Client: STV Incorporated

Job Number: 220-9412-1
Sdg Number: 220-9412

Client Sample ID: **S-1**

Lab Sample ID: 220-9412-3
Client Matrix: Solid
% Moisture: 56.4
Date Sampled: 06/19/2009 1045
Date Received: 06/20/2009 0748

8270C Semivolatile Compounds by Gas Chromatography/Mass Spectrometry (GC/MS)

Method: 8270C
Preparation: 3541
Dilution: 20
Date Analyzed: 06/23/2009 1228
Date Prepared: 06/20/2009 1110
Analysis Batch: 220-28390
Prep Batch: 220-28293
Instrument ID: HP 6890/5973 GC/MS
Lab File ID: Z11432.D
Initial Weight/Volume: 15.19 g
Final Weight/Volume: 1 mL
Injection Volume: 1.0 uL

Analyte	DryWt Corrected: Y	Result (ug/Kg)	Qualifier	MDL	RL
N-Nitrosodiphenylamine		12000	U	690	12000
Phenanthrene		14000		600	12000
Pyrene		19000		570	12000
1,2,4-Trichlorobenzene		12000	U	800	12000
4-Chloro-3-methylphenol		12000	U	500	12000
2-Chlorophenol		12000	U	710	12000
2-Methylphenol		12000	U	730	12000
4-Methylphenol		12000	U	800	12000
2,4-Dichlorophenol		12000	U	650	12000
2,4-Dimethylphenol		12000	U	590	12000
2,4-Dinitrophenol		77000	U *	3700	77000
4,6-Dinitro-2-methylphenol		77000	U *	5200	77000
2-Nitrophenol		12000	U	770	12000
4-Nitrophenol		77000	U	920	77000
Pentachlorophenol		77000	U	7400	77000
Phenol		12000	U	810	12000
2,4,5-Trichlorophenol		77000	U	620	77000
2,4,6-Trichlorophenol		12000	U	330	12000
Benzyl alcohol		12000	U	1200	12000
4-Nitroaniline		12000	U	940	12000
2,2'-oxybis[1-chloropropane]		12000	U	630	12000

Surrogate	%Rec	Acceptance Limits
2-Fluorobiphenyl	92	41 - 120
2-Fluorophenol	80	34 - 120
2,4,6-Tribromophenol	94	37 - 120
Nitrobenzene-d5	93	38 - 120
Phenol-d5	95	36 - 120
Terphenyl-d14	87	32 - 125

Client: STV Incorporated

Job Number: 220-9412-1
Sdg Number: 220-9412

Client Sample ID: S-2

Lab Sample ID: 220-9412-4
Client Matrix: Solid

Date Sampled: 06/19/2009 1115
Date Received: 06/20/2009 0748

8270C Semivolatile Compounds by Gas Chromatography/Mass Spectrometry (GC/MS)-TCLP

Method: 8270C
Preparation: 3510C
Dilution: 1.0
Date Analyzed: 06/24/2009 1549
Date Prepared: 06/24/2009 0907
Date Leached: 06/22/2009 1600

Analysis Batch: 220-28470
Prep Batch: 220-28419
Leachate Batch: 220-28369

Instrument ID: HP 6890/5975
Lab File ID: A5795.D
Initial Weight/Volume: 250 mL
Final Weight/Volume: 0.5 mL
Injection Volume: 1.0 uL

Analyte	DryWt Corrected: N Result (mg/L)	Qualifier	MDL	RL
1,4-Dichlorobenzene	0.020	U	0.00062	0.020
2,4-Dinitrotoluene	0.020	U	0.00080	0.020
2,4,5-Trichlorophenol	0.10	U	0.00056	0.10
2,4,6-Trichlorophenol	0.020	U	0.00074	0.020
2-Methylphenol	0.020	U	0.00048	0.020
Hexachlorobenzene	0.020	U	0.00066	0.020
Hexachlorobutadiene	0.020	U	0.00040	0.020
Hexachloroethane	0.020	U	0.00074	0.020
Nitrobenzene	0.020	U	0.00056	0.020
Pentachlorophenol	0.10	U	0.00062	0.10
Pyridine	0.040	U	0.0077	0.040
4-Methylphenol	0.020	U	0.00058	0.020

Surrogate	%Rec	Acceptance Limits
2,4,6-Tribromophenol	85	29 - 126
2-Fluorobiphenyl	60	43 - 116
2-Fluorophenol	54	21 - 97
Nitrobenzene-d5	64	38 - 113
Terphenyl-d14	88	10 - 119
Phenol-d5	52	18 - 97

Client: STV Incorporated

Job Number: 220-9412-1
Sdg Number: 220-9412

Client Sample ID: S-2

Lab Sample ID: 220-9412-4
Client Matrix: Solid

% Moisture: 53.7

Date Sampled: 06/19/2009 1115
Date Received: 06/20/2009 0748

8270C Semivolatile Compounds by Gas Chromatography/Mass Spectrometry (GC/MS)

Method: 8270C
Preparation: 3541
Dilution: 20
Date Analyzed: 06/23/2009 1255
Date Prepared: 06/22/2009 1437

Analysis Batch: 220-28390
Prep Batch: 220-28343

Instrument ID: HP 6890/5973 GC/MS
Lab File ID: Z11433.D
Initial Weight/Volume: 15.18 g
Final Weight/Volume: 1 mL
Injection Volume: 1.0 uL

Analyte	DryWt Corrected: Y	Result (ug/Kg)	Qualifier	MDL	RL
Acenaphthene		2400	J	680	12000
Acenaphthylene		2100	J	560	12000
Anthracene		7500	J	450	12000
Benzo[a]anthracene		8900	J	410	12000
Benzo[a]pyrene		7200	J	310	12000
Benzo[b]fluoranthene		5300	J	310	12000
Benzo[g,h,i]perylene		11000	J	750	12000
Benzo[k]fluoranthene		1800	J	1000	12000
Bis(2-chloroethoxy)methane		12000	U	530	12000
Bis(2-chloroethyl)ether		12000	U	600	12000
Bis(2-ethylhexyl) phthalate		110000		1100	12000
Butyl benzyl phthalate		12000	U	640	12000
Carbazole		12000	U	640	12000
Chrysene		9200	J	850	12000
Di-n-butyl phthalate		12000	U	1700	12000
Di-n-octyl phthalate		12000	U	650	12000
4-Bromophenyl phenyl ether		12000	U	740	12000
4-Chloroaniline		12000	U	1900	12000
2-Chloronaphthalene		12000	U	490	12000
4-Chlorophenyl phenyl ether		12000	U	850	12000
Dibenz(a,h)anthracene		11000	J	910	12000
Dibenzofuran		1400	J	810	12000
Diethyl phthalate		12000	U	1200	12000
Dimethyl phthalate		12000	U	660	12000
1,2-Dichlorobenzene		12000	U	680	12000
1,3-Dichlorobenzene		12000	U	580	12000
1,4-Dichlorobenzene		12000	U	680	12000
3,3'-Dichlorobenzidine		29000	U	2400	29000
2,4-Dinitrotoluene		12000	U	920	12000
2,6-Dinitrotoluene		12000	U	340	12000
Fluoranthene		15000		570	12000
Fluorene		1700	J	690	12000
Hexachlorobenzene		12000	U	800	12000
Hexachlorobutadiene		12000	U	890	12000
Hexachlorocyclopentadiene		29000	U	5400	29000
Hexachloroethane		12000	U	660	12000
Indeno[1,2,3-cd]pyrene		14000		750	12000
Isophorone		12000	U	640	12000
2-Methylnaphthalene		2200	J	330	12000
Naphthalene		2900	J	600	12000
2-Nitroaniline		73000	U	700	73000
3-Nitroaniline		73000	U	370	73000
Nitrobenzene		12000	U	730	12000
N-Nitrosodi-n-propylamine		12000	U	780	12000

Client: STV Incorporated

Job Number: 220-9412-1
Sdg Number: 220-9412

Client Sample ID: S-2

Lab Sample ID: 220-9412-4
Client Matrix: Solid
% Moisture: 53.7
Date Sampled: 06/19/2009 1115
Date Received: 06/20/2009 0748

8270C Semivolatile Compounds by Gas Chromatography/Mass Spectrometry (GC/MS)

Method: 8270C
Preparation: 3541
Dilution: 20
Date Analyzed: 06/23/2009 1255
Date Prepared: 06/22/2009 1437
Analysis Batch: 220-28390
Prep Batch: 220-28343
Instrument ID: HP 6890/5973 GC/MS
Lab File ID: Z11433.D
Initial Weight/Volume: 15.18 g
Final Weight/Volume: 1 mL
Injection Volume: 1.0 uL

Analyte	DryWt Corrected: Y	Result (ug/Kg)	Qualifier	MDL	RL
N-Nitrosodiphenylamine		12000	U	650	12000
Phenanthrene		8700	J	570	12000
Pyrene		21000		540	12000
1,2,4-Trichlorobenzene		12000	U	760	12000
4-Chloro-3-methylphenol		12000	U	470	12000
2-Chlorophenol		12000	U	670	12000
2-Methylphenol		12000	U	690	12000
4-Methylphenol		12000	U	760	12000
2,4-Dichlorophenol		12000	U	610	12000
2,4-Dimethylphenol		12000	U	560	12000
2,4-Dinitrophenol		73000	U	3500	73000
4,6-Dinitro-2-methylphenol		73000	U	5000	73000
2-Nitrophenol		12000	U	730	12000
4-Nitrophenol		73000	U	870	73000
Pentachlorophenol		73000	U	7000	73000
Phenol		12000	U	760	12000
2,4,5-Trichlorophenol		73000	U	580	73000
2,4,6-Trichlorophenol		12000	U	320	12000
Benzyl alcohol		12000	U	1100	12000
4-Nitroaniline		12000	U	880	12000
2,2'-oxybis[1-chloropropane]		12000	U	600	12000

Surrogate	%Rec	Acceptance Limits
2-Fluorobiphenyl	75	41 - 120
2-Fluorophenol	73	34 - 120
2,4,6-Tribromophenol	83	37 - 120
Nitrobenzene-d5	67	38 - 120
Phenol-d5	74	36 - 120
Terphenyl-d14	68	32 - 125

Client: STV Incorporated

Job Number: 220-9412-1
Sdg Number: 220-9412

Client Sample ID: **W-TANK**

Lab Sample ID: 220-9412-1
Client Matrix: Water

Date Sampled: 06/19/2009 1030
Date Received: 06/20/2009 0748

8015B Gasoline Range Organics - (GC)

Method: 8015B
Preparation: 5030B
Dilution: 1.0
Date Analyzed: 06/25/2009 1843
Date Prepared: 06/25/2009 1843

Analysis Batch: 680-141418

Instrument ID: GC Volatiles - W FID1
Lab File ID: W062507.D
Initial Weight/Volume: 20 mL
Final Weight/Volume: 20 mL
Injection Volume:
Column ID: PRIMARY

Analyte	Result (mg/L)	Qualifier	MDL	RL
Gasoline Range Organics (GRO)-C6-C10	0.018	J	0.011	0.050

Surrogate	%Rec	Acceptance Limits
a,a,a-Trifluorotoluene	98	66 - 125

Client: STV Incorporated

Job Number: 220-9412-1
Sdg Number: 220-9412

Client Sample ID: **W-EXC**

Lab Sample ID: 220-9412-2
Client Matrix: Water

Date Sampled: 06/19/2009 1000
Date Received: 06/20/2009 0748

8015B Gasoline Range Organics - (GC)

Method: 8015B
Preparation: 5030B
Dilution: 1.0
Date Analyzed: 06/25/2009 1910
Date Prepared: 06/25/2009 1910

Analysis Batch: 680-141418

Instrument ID: GC Volatiles - W FID1
Lab File ID: W062508.D
Initial Weight/Volume: 20 mL
Final Weight/Volume: 20 mL
Injection Volume:
Column ID: PRIMARY

Analyte	Result (mg/L)	Qualifier	MDL	RL
Gasoline Range Organics (GRO)-C6-C10	0.050	U	0.011	0.050

Surrogate	%Rec	Acceptance Limits
a,a,a-Trifluorotoluene	100	66 - 125

Client: STV Incorporated

Job Number: 220-9412-1
Sdg Number: 220-9412

Client Sample ID: S-1

Lab Sample ID: 220-9412-3
Client Matrix: Solid

% Moisture: 56.4

Date Sampled: 06/19/2009 1045
Date Received: 06/20/2009 0748

8015B Gasoline Range Organics - (GC)

Method: 8015B
Preparation: 5030A
Dilution: 20
Date Analyzed: 06/25/2009 1314
Date Prepared: 06/25/2009 1314

Analysis Batch: 680-141384

Instrument ID: GC Volatiles - W FID1
Lab File ID: W062503.D
Initial Weight/Volume: 5 mL
Final Weight/Volume: 5 mL
Injection Volume:
Column ID: PRIMARY

Analyte	DryWt Corrected: Y	Result (mg/Kg)	Qualifier	MDL	RL
Gasoline Range Organics (GRO)-C6-C10		28		0.87	11

Surrogate	%Rec	Acceptance Limits
a,a,a-Trifluorotoluene	60	53 - 121

Client: STV Incorporated

Job Number: 220-9412-1
Sdg Number: 220-9412

Client Sample ID: **S-2**

Lab Sample ID: 220-9412-4
Client Matrix: Solid
% Moisture: 53.7
Date Sampled: 06/19/2009 1115
Date Received: 06/20/2009 0748

8015B Gasoline Range Organics - (GC)

Method: 8015B
Preparation: 5030A
Dilution: 20
Date Analyzed: 06/25/2009 1338
Date Prepared: 06/25/2009 1338
Analysis Batch: 680-141384
Instrument ID: GC Volatiles - W FID1
Lab File ID: W062504.D
Initial Weight/Volume: 5 mL
Final Weight/Volume: 5 mL
Injection Volume:
Column ID: PRIMARY

Analyte	DryWt Corrected: Y	Result (mg/Kg)	Qualifier	MDL	RL
Gasoline Range Organics (GRO)-C6-C10		50		0.82	11

Surrogate	%Rec	Acceptance Limits
a,a,a-Trifluorotoluene	66	53 - 121

Client: STV Incorporated

Job Number: 220-9412-1
Sdg Number: 220-9412

Client Sample ID: **W-TANK**

Lab Sample ID: 220-9412-1
Client Matrix: Water

Date Sampled: 06/19/2009 1030
Date Received: 06/20/2009 0748

8015B Diesel Range Organics (DRO) (GC)

Method: 8015B
Preparation: 3510C
Dilution: 10
Date Analyzed: 06/25/2009 0027
Date Prepared: 06/20/2009 1314

Analysis Batch: 220-28491
Prep Batch: 220-28304

Instrument ID: HP5890 with FID/NPD
Lab File ID: C2563013.d
Initial Weight/Volume: 1000 mL
Final Weight/Volume: 1 mL
Injection Volume: 1 uL
Column ID: PRIMARY

Analyte	Result (ug/L)	Qualifier	RL	RL
Diesel Range Organics [C10-C28]	11000		5000	5000

Surrogate	%Rec	Acceptance Limits
o-Terphenyl	91	24 - 132

Client: STV Incorporated

Job Number: 220-9412-1
Sdg Number: 220-9412

Client Sample ID: **W-TANK**

Lab Sample ID: 220-9412-1
Client Matrix: Water

Date Sampled: 06/19/2009 1030
Date Received: 06/20/2009 0748

8015B Hydrocarbon Product Identification (GC)

Method: 8015B
Preparation: 3510C
Dilution: 1.0
Date Analyzed: 06/22/2009 0517
Date Prepared: 06/20/2009 1314

Analysis Batch: 220-28034
Prep Batch: 220-28304

Instrument ID: HP5890 with FID/NPD
Lab File ID: C2561438.d
Initial Weight/Volume: 1000 mL
Final Weight/Volume: 1 mL
Injection Volume: 1 uL
Column ID: PRIMARY

Surrogate	%Rec	Acceptance Limits
o-Terphenyl	126	24 - 132

Client: STV Incorporated

Job Number: 220-9412-1
Sdg Number: 220-9412

Client Sample ID: **W-EXC**

Lab Sample ID: 220-9412-2
Client Matrix: Water

Date Sampled: 06/19/2009 1000
Date Received: 06/20/2009 0748

8015B Diesel Range Organics (DRO) (GC)

Method: 8015B
Preparation: 3510C
Dilution: 1.0
Date Analyzed: 06/25/2009 0054
Date Prepared: 06/20/2009 1314

Analysis Batch: 220-28491
Prep Batch: 220-28304

Instrument ID: HP5890 with FID/NPD
Lab File ID: C2563014.d
Initial Weight/Volume: 1000 mL
Final Weight/Volume: 1 mL
Injection Volume: 1 uL
Column ID: PRIMARY

Analyte	Result (ug/L)	Qualifier	RL	RL
Diesel Range Organics [C10-C28]	890		500	500

Surrogate	%Rec	Acceptance Limits
o-Terphenyl	57	24 - 132

Client: STV Incorporated

Job Number: 220-9412-1
Sdg Number: 220-9412

Client Sample ID: **W-EXC**

Lab Sample ID: 220-9412-2
Client Matrix: Water

Date Sampled: 06/19/2009 1000
Date Received: 06/20/2009 0748

8015B Hydrocarbon Product Identification (GC)

Method: 8015B
Preparation: 3510C
Dilution: 1.0
Date Analyzed: 06/22/2009 0544
Date Prepared: 06/20/2009 1314

Analysis Batch: 220-28034
Prep Batch: 220-28304

Instrument ID: HP5890 with FID/NPD
Lab File ID: C2561439.d
Initial Weight/Volume: 1000 mL
Final Weight/Volume: 1 mL
Injection Volume: 1 uL
Column ID: PRIMARY

Surrogate	%Rec	Acceptance Limits
o-Terphenyl	62	24 - 132

Client: STV Incorporated

Job Number: 220-9412-1
Sdg Number: 220-9412

Client Sample ID: **S-1**

Lab Sample ID: 220-9412-3
Client Matrix: Solid

% Moisture: 56.4

Date Sampled: 06/19/2009 1045
Date Received: 06/20/2009 0748

8015B Diesel Range Organics (DRO) (GC)

Method: 8015B
Preparation: 3550B
Dilution: 25
Date Analyzed: 06/25/2009 0121
Date Prepared: 06/20/2009 1131

Analysis Batch: 220-28491
Prep Batch: 220-28294

Instrument ID: HP5890 with FID/NPD
Lab File ID: C2563015.d
Initial Weight/Volume: 30.47 g
Final Weight/Volume: 1 mL
Injection Volume: 1 uL
Column ID: PRIMARY

Analyte	DryWt Corrected: Y	Result (ug/Kg)	Qualifier	RL	RL
Diesel Range Organics [C10-C28]		5100000		960000	960000

Surrogate	%Rec		Acceptance Limits
o-Terphenyl	0	*	28 - 146

Client: STV Incorporated

Job Number: 220-9412-1
Sdg Number: 220-9412

Client Sample ID: **S-2**

Lab Sample ID: 220-9412-4
Client Matrix: Solid
% Moisture: 53.7
Date Sampled: 06/19/2009 1115
Date Received: 06/20/2009 0748

8015B Diesel Range Organics (DRO) (GC)

Method: 8015B
Preparation: 3550B
Dilution: 100
Date Analyzed: 06/25/2009 0148
Date Prepared: 06/20/2009 1131
Analysis Batch: 220-28491
Prep Batch: 220-28294
Instrument ID: HP5890 with FID/NPD
Lab File ID: C2563016.d
Initial Weight/Volume: 30.53 g
Final Weight/Volume: 1 mL
Injection Volume: 1 uL
Column ID: PRIMARY

Analyte	DryWt Corrected: Y	Result (ug/Kg)	Qualifier	RL	RL
Diesel Range Organics [C10-C28]		7000000		3600000	3600000

Surrogate	%Rec		Acceptance Limits
o-Terphenyl	0	*	28 - 146

Client: STV Incorporated

Job Number: 220-9412-1
Sdg Number: 220-9412

Client Sample ID: **S-1**

Lab Sample ID: 220-9412-3
Client Matrix: Solid

Date Sampled: 06/19/2009 1045
Date Received: 06/20/2009 0748

8081A Organochlorine Pesticides (GC)-TCLP

Method: 8081A
Preparation: 3510C
Dilution: 1.0
Date Analyzed: 06/25/2009 0143
Date Prepared: 06/23/2009 1238
Date Leached: 06/22/2009 1600

Analysis Batch: 220-28488
Prep Batch: 220-28387
Leachate Batch: 220-28369

Instrument ID: HP 6890 dual ECD
Lab File ID: C8418025.D
Initial Weight/Volume: 200 mL
Final Weight/Volume: 10 mL
Injection Volume: 1.0 uL
Column ID: PRIMARY

Analyte	DryWt Corrected: N	Result (mg/L)	Qualifier	MDL	RL
Chlordane (technical)		0.0025	U	0.00021	0.0025
Endrin		0.00050	U	0.000068	0.00050
Heptachlor		0.00025	U	0.000030	0.00025
Heptachlor epoxide		0.00025	U	0.000028	0.00025
gamma-BHC (Lindane)		0.00025	U	0.000028	0.00025
Methoxychlor		0.0025	U *	0.00041	0.0025
Toxaphene		0.012	U	0.00020	0.012

Surrogate	%Rec	Acceptance Limits
DCB Decachlorobiphenyl	70	29 - 156
Tetrachloro-m-xylene	90	53 - 144

Method: 8081A
Preparation: 3510C
Dilution: 1.0
Date Analyzed: 06/25/2009 0143
Date Prepared: 06/23/2009 1238
Date Leached: 06/22/2009 1600

Analysis Batch: 220-28488
Prep Batch: 220-28387
Leachate Batch: 220-28369

Instrument ID: HP 6890 dual ECD
Lab File ID: D8418025.D
Initial Weight/Volume: 200 mL
Final Weight/Volume: 10 mL
Injection Volume: 1.0 uL
Column ID: SECONDARY

Surrogate	%Rec	Acceptance Limits
DCB Decachlorobiphenyl	67	29 - 156
Tetrachloro-m-xylene	86	53 - 144

Client: STV Incorporated

Job Number: 220-9412-1
Sdg Number: 220-9412

Client Sample ID: **S-1**

Lab Sample ID: 220-9412-3
Client Matrix: Solid
% Moisture: 56.4

Date Sampled: 06/19/2009 1045
Date Received: 06/20/2009 0748

8081A Organochlorine Pesticides (GC)

Method: 8081A
Preparation: 3550B
Dilution: 5.0
Date Analyzed: 06/23/2009 1625
Date Prepared: 06/20/2009 1207

Analysis Batch: 220-28430
Prep Batch: 220-28296

Instrument ID: HP 5890 with dual ECD
Lab File ID: D7733047.D
Initial Weight/Volume: 30.04 g
Final Weight/Volume: 10 mL
Injection Volume: 1.0 uL
Column ID: PRIMARY

Analyte	DryWt Corrected: Y Result (ug/Kg)	Qualifier	MDL	RL
4,4'-DDD	310		6.8	38
4,4'-DDE	130		7.7	38
4,4'-DDT	410	*	9.3	38
Aldrin	6.4	J	2.1	19
alpha-BHC	19	U	2.8	19
beta-BHC	18	J	4.3	19
delta-BHC	19	U	4.2	19
Dieldrin	180		6.5	38
Endosulfan I	19	U	3.3	19
Endosulfan II	38	U	7.1	38
Endosulfan sulfate	38	U	6.8	38
Endrin	270		7.1	38
Endrin ketone	76		6.9	38
gamma-BHC (Lindane)	19	U	3.3	19
Heptachlor	41		3.6	19
Heptachlor epoxide	27		3.4	19
Methoxychlor	96	J *	42	190
Toxaphene	950	U	100	950
alpha-Chlordane	61		3.1	19
gamma-Chlordane	94		6.1	19

Surrogate	%Rec		Acceptance Limits
DCB Decachlorobiphenyl	399	*	25 - 159
Tetrachloro-m-xylene	111		24 - 154

Method: 8081A
Preparation: 3550B
Dilution: 5.0
Date Analyzed: 06/23/2009 1625
Date Prepared: 06/20/2009 1207

Analysis Batch: 220-28430
Prep Batch: 220-28296

Instrument ID: HP 5890 with dual ECD
Lab File ID: C7733047.D
Initial Weight/Volume: 30.04 g
Final Weight/Volume: 10 mL
Injection Volume: 1.0 uL
Column ID: SECONDARY

Surrogate	%Rec		Acceptance Limits
DCB Decachlorobiphenyl	379	*	25 - 159
Tetrachloro-m-xylene	108		24 - 154

Client: STV Incorporated

Job Number: 220-9412-1
Sdg Number: 220-9412

Client Sample ID: **S-1**

Lab Sample ID: 220-9412-3
Client Matrix: Solid

% Moisture: 56.4

Date Sampled: 06/19/2009 1045
Date Received: 06/20/2009 0748

8081A Organochlorine Pesticides (GC)

Method: 8081A
Preparation: 3550B
Dilution: 5.0
Date Analyzed: 06/23/2009 2024
Date Prepared: 06/20/2009 1207

Analysis Batch: 220-28430
Prep Batch: 220-28296

Instrument ID: HP 5890 with dual ECD
Lab File ID: D7733056.D
Initial Weight/Volume: 30.04 g
Final Weight/Volume: 10 mL
Injection Volume: 1.0 uL
Column ID: PRIMARY

Analyte	DryWt Corrected: Y	Result (ug/Kg)	Qualifier	MDL	RL
Endrin aldehyde		75		4.7	38

Client: STV Incorporated

Job Number: 220-9412-1
Sdg Number: 220-9412

Client Sample ID: **S-1**

Lab Sample ID: 220-9412-3
Client Matrix: Solid

% Moisture: 56.4

Date Sampled: 06/19/2009 1045
Date Received: 06/20/2009 0748

8081A Organochlorine Pesticides (GC)

Method: 8081A
Preparation: 3550B
Dilution: 5.0
Date Analyzed: 06/23/2009 2024
Date Prepared: 06/20/2009 1207

Analysis Batch: 220-28430
Prep Batch: 220-28296

Instrument ID: HP 5890 with dual ECD
Lab File ID: C7733056.D
Initial Weight/Volume: 30.04 g
Final Weight/Volume: 10 mL
Injection Volume: 1.0 uL
Column ID: SECONDARY

Surrogate	%Rec		Acceptance Limits
DCB Decachlorobiphenyl	280	*	25 - 159
DCB Decachlorobiphenyl	473	*	25 - 159
Tetrachloro-m-xylene	135		24 - 154
Tetrachloro-m-xylene	613	*	24 - 154

Client: STV Incorporated

Job Number: 220-9412-1
Sdg Number: 220-9412

Client Sample ID: **S-2**

Lab Sample ID: 220-9412-4
Client Matrix: Solid

Date Sampled: 06/19/2009 1115
Date Received: 06/20/2009 0748

8081A Organochlorine Pesticides (GC)-TCLP

Method: 8081A
Preparation: 3510C
Dilution: 1.0
Date Analyzed: 06/25/2009 0208
Date Prepared: 06/23/2009 1238
Date Leached: 06/22/2009 1600

Analysis Batch: 220-28488
Prep Batch: 220-28387
Leachate Batch: 220-28369

Instrument ID: HP 6890 dual ECD
Lab File ID: C8418026.D
Initial Weight/Volume: 200 mL
Final Weight/Volume: 10 mL
Injection Volume: 1.0 uL
Column ID: PRIMARY

Analyte	DryWt Corrected: N	Result (mg/L)	Qualifier	MDL	RL
Chlordane (technical)		0.0025	U	0.00021	0.0025
Endrin		0.00050	U	0.000068	0.00050
Heptachlor		0.000042	J	0.000030	0.00025
Heptachlor epoxide		0.00025	U	0.000028	0.00025
gamma-BHC (Lindane)		0.00025	U	0.000028	0.00025
Methoxychlor		0.0025	U *	0.00041	0.0025
Toxaphene		0.012	U	0.00020	0.012

Surrogate	%Rec	Acceptance Limits
DCB Decachlorobiphenyl	60	29 - 156
Tetrachloro-m-xylene	88	53 - 144

Method: 8081A
Preparation: 3510C
Dilution: 1.0
Date Analyzed: 06/25/2009 0208
Date Prepared: 06/23/2009 1238
Date Leached: 06/22/2009 1600

Analysis Batch: 220-28488
Prep Batch: 220-28387
Leachate Batch: 220-28369

Instrument ID: HP 6890 dual ECD
Lab File ID: D8418026.D
Initial Weight/Volume: 200 mL
Final Weight/Volume: 10 mL
Injection Volume: 1.0 uL
Column ID: SECONDARY

Surrogate	%Rec	Acceptance Limits
DCB Decachlorobiphenyl	59	29 - 156
Tetrachloro-m-xylene	82	53 - 144

Client: STV Incorporated

Job Number: 220-9412-1
Sdg Number: 220-9412

Client Sample ID: **S-2**

Lab Sample ID: 220-9412-4
Client Matrix: Solid

% Moisture: 53.7

Date Sampled: 06/19/2009 1115
Date Received: 06/20/2009 0748

8081A Organochlorine Pesticides (GC)

Method: 8081A
Preparation: 3550B
Dilution: 2.0
Date Analyzed: 06/23/2009 2004
Date Prepared: 06/20/2009 1207

Analysis Batch: 220-28430
Prep Batch: 220-28296

Instrument ID: HP 5890 with dual ECD
Lab File ID: C7733055.D
Initial Weight/Volume: 30.29 g
Final Weight/Volume: 10 mL
Injection Volume: 1.0 uL
Column ID: PRIMARY

Analyte	DryWt Corrected: Y Result (ug/Kg)	Qualifier	MDL	RL
4,4'-DDD	120		2.5	14
4,4'-DDE	66		2.9	14
4,4'-DDT	260	*	3.5	14
Aldrin	7.3	U	0.77	7.3
alpha-BHC	3.0	J	1.0	7.3
beta-BHC	8.3		1.6	7.3
delta-BHC	7.3	U	1.6	7.3
Dieldrin	74		2.4	14
Endosulfan I	7.3	U	1.2	7.3
Endosulfan II	14	U	2.7	14
Endosulfan sulfate	14	U	2.5	14
Endrin	200		2.6	14
Endrin ketone	43		2.6	14
gamma-BHC (Lindane)	7.3	U	1.2	7.3
Heptachlor	26		1.4	7.3
Heptachlor epoxide	11		1.3	7.3
Methoxychlor	61	J *	16	73
Toxaphene	360	U	39	360
alpha-Chlordane	31		1.2	7.3
gamma-Chlordane	32		2.3	7.3

Surrogate	%Rec	Acceptance Limits
DCB Decachlorobiphenyl	107	25 - 159
Tetrachloro-m-xylene	26	24 - 154

Method: 8081A
Preparation: 3550B
Dilution: 2.0
Date Analyzed: 06/23/2009 2004
Date Prepared: 06/20/2009 1207

Analysis Batch: 220-28430
Prep Batch: 220-28296

Instrument ID: HP 5890 with dual ECD
Lab File ID: D7733055.D
Initial Weight/Volume: 30.29 g
Final Weight/Volume: 10 mL
Injection Volume: 1.0 uL
Column ID: SECONDARY

Surrogate	%Rec		Acceptance Limits
DCB Decachlorobiphenyl	82		25 - 159
Tetrachloro-m-xylene	23	*	24 - 154

Client: STV Incorporated

Job Number: 220-9412-1
Sdg Number: 220-9412

Client Sample ID: **S-2**

Lab Sample ID: 220-9412-4
Client Matrix: Solid

% Moisture: 53.7

Date Sampled: 06/19/2009 1115
Date Received: 06/20/2009 0748

8081A Organochlorine Pesticides (GC)

Method: 8081A
Preparation: 3550B
Dilution: 2.0
Date Analyzed: 06/23/2009 2044
Date Prepared: 06/20/2009 1207

Analysis Batch: 220-28430
Prep Batch: 220-28296

Instrument ID: HP 5890 with dual ECD
Lab File ID: D7733057.D
Initial Weight/Volume: 30.29 g
Final Weight/Volume: 10 mL
Injection Volume: 1.0 uL
Column ID: PRIMARY

Analyte	DryWt Corrected: Y	Result (ug/Kg)	Qualifier	MDL	RL
Endrin aldehyde		46		1.7	14

Client: STV Incorporated

Job Number: 220-9412-1
Sdg Number: 220-9412

Client Sample ID: **S-2**

Lab Sample ID: 220-9412-4
Client Matrix: Solid

% Moisture: 53.7

Date Sampled: 06/19/2009 1115
Date Received: 06/20/2009 0748

8081A Organochlorine Pesticides (GC)

Method: 8081A
Preparation: 3550B
Dilution: 2.0
Date Analyzed: 06/23/2009 2044
Date Prepared: 06/20/2009 1207

Analysis Batch: 220-28430
Prep Batch: 220-28296

Instrument ID: HP 5890 with dual ECD
Lab File ID: C7733057.D
Initial Weight/Volume: 30.29 g
Final Weight/Volume: 10 mL
Injection Volume: 1.0 uL
Column ID: SECONDARY

Surrogate	%Rec		Acceptance Limits
DCB Decachlorobiphenyl	101		25 - 159
DCB Decachlorobiphenyl	162	*	25 - 159
Tetrachloro-m-xylene	20	*	24 - 154
Tetrachloro-m-xylene	191	*	24 - 154

Client: STV Incorporated

Job Number: 220-9412-1
Sdg Number: 220-9412

Client Sample ID: **W-TANK**

Lab Sample ID: 220-9412-1
Client Matrix: Water

Date Sampled: 06/19/2009 1030
Date Received: 06/20/2009 0748

8082 Polychlorinated Biphenyls (PCBs) by Gas Chromatography

Method: 8082
Preparation: 3510C
Dilution: 1.0
Date Analyzed: 06/22/2009 1027
Date Prepared: 06/20/2009 1308

Analysis Batch: 220-28368
Prep Batch: 220-28303

Instrument ID: HP 6890 dual ECD
Lab File ID: C9043990.D
Initial Weight/Volume: 1000 mL
Final Weight/Volume: 10 mL
Injection Volume: 1.0 uL
Column ID: PRIMARY

Analyte	Result (ug/L)	Qualifier	MDL	RL
PCB-1016	0.50	U	0.050	0.50
PCB-1221	0.50	U	0.050	0.50
PCB-1232	0.50	U	0.050	0.50
PCB-1242	1.6		0.050	0.50
PCB-1248	0.50	U	0.050	0.50
PCB-1254	2.3		0.082	0.50
PCB-1260	2.2		0.082	0.50

Surrogate	%Rec		Acceptance Limits
Tetrachloro-m-xylene	29		22 - 145
DCB Decachlorobiphenyl	26	*	29 - 135

Method: 8082
Preparation: 3510C
Dilution: 1.0
Date Analyzed: 06/22/2009 1027
Date Prepared: 06/20/2009 1308

Analysis Batch: 220-28368
Prep Batch: 220-28303

Instrument ID: HP 6890 dual ECD
Lab File ID: D9043990.D
Initial Weight/Volume: 1000 mL
Final Weight/Volume: 10 mL
Injection Volume: 1.0 uL
Column ID: SECONDARY

Surrogate	%Rec		Acceptance Limits
Tetrachloro-m-xylene	28		22 - 145
DCB Decachlorobiphenyl	24	*	29 - 135

Client: STV Incorporated

Job Number: 220-9412-1
Sdg Number: 220-9412

Client Sample ID: **W-EXC**

Lab Sample ID: 220-9412-2
Client Matrix: Water

Date Sampled: 06/19/2009 1000
Date Received: 06/20/2009 0748

8082 Polychlorinated Biphenyls (PCBs) by Gas Chromatography

Method: 8082
Preparation: 3510C
Dilution: 1.0
Date Analyzed: 06/22/2009 1046
Date Prepared: 06/20/2009 1308

Analysis Batch: 220-28368
Prep Batch: 220-28303

Instrument ID: HP 6890 dual ECD
Lab File ID: D9043991.D
Initial Weight/Volume: 1000 mL
Final Weight/Volume: 10 mL
Injection Volume: 1.0 uL
Column ID: PRIMARY

Analyte	Result (ug/L)	Qualifier	MDL	RL
PCB-1016	0.50	U	0.050	0.50
PCB-1221	0.50	U	0.050	0.50
PCB-1232	0.50	U	0.050	0.50
PCB-1242	0.50	U	0.050	0.50
PCB-1248	0.50	U	0.050	0.50
PCB-1254	0.50	U	0.082	0.50
PCB-1260	0.50	U	0.082	0.50

Surrogate	%Rec		Acceptance Limits
Tetrachloro-m-xylene	65		22 - 145
DCB Decachlorobiphenyl	27	*	29 - 135

Client: STV Incorporated

Job Number: 220-9412-1
Sdg Number: 220-9412

Client Sample ID: **S-1**

Lab Sample ID: 220-9412-3
Client Matrix: Solid

% Moisture: 56.4

Date Sampled: 06/19/2009 1045
Date Received: 06/20/2009 0748

8082 Polychlorinated Biphenyls (PCBs) by Gas Chromatography

Method: 8082
Preparation: 3550B
Dilution: 2.0
Date Analyzed: 06/23/2009 1241
Date Prepared: 06/22/2009 1349

Analysis Batch: 220-28393
Prep Batch: 220-28341

Instrument ID: HP 6890 dual ECD
Lab File ID: C90431051.D
Initial Weight/Volume: 30.40 g
Final Weight/Volume: 10 mL
Injection Volume: 1.0 uL
Column ID: PRIMARY

Analyte	DryWt Corrected: Y Result (ug/Kg)	Qualifier	MDL	RL
PCB-1016	77	U	6.0	77
PCB-1221	77	U	6.0	77
PCB-1232	77	U	6.0	77
PCB-1242	590		6.0	77
PCB-1248	77	U	6.0	77
PCB-1254	520		6.5	77
PCB-1260	760		6.5	77

Surrogate	%Rec	Acceptance Limits
Tetrachloro-m-xylene	24	24 - 150
DCB Decachlorobiphenyl	84	24 - 150

Method: 8082
Preparation: 3550B
Dilution: 2.0
Date Analyzed: 06/23/2009 1241
Date Prepared: 06/22/2009 1349

Analysis Batch: 220-28393
Prep Batch: 220-28341

Instrument ID: HP 6890 dual ECD
Lab File ID: D90431051.D
Initial Weight/Volume: 30.40 g
Final Weight/Volume: 10 mL
Injection Volume: 1.0 uL
Column ID: SECONDARY

Surrogate	%Rec	Acceptance Limits
Tetrachloro-m-xylene	23	24 - 150
DCB Decachlorobiphenyl	77	24 - 150

Client: STV Incorporated

Job Number: 220-9412-1
Sdg Number: 220-9412

Client Sample ID: S-2

Lab Sample ID: 220-9412-4
Client Matrix: Solid

% Moisture: 53.7

Date Sampled: 06/19/2009 1115
Date Received: 06/20/2009 0748

8082 Polychlorinated Biphenyls (PCBs) by Gas Chromatography

Method: 8082
Preparation: 3550B
Dilution: 5.0
Date Analyzed: 06/23/2009 1222
Date Prepared: 06/22/2009 1349

Analysis Batch: 220-28393
Prep Batch: 220-28341

Instrument ID: HP 6890 dual ECD
Lab File ID: C90431050.D
Initial Weight/Volume: 30.20 g
Final Weight/Volume: 10 mL
Injection Volume: 1.0 uL
Column ID: PRIMARY

Analyte	DryWt Corrected: Y Result (ug/Kg)	Qualifier	MDL	RL
PCB-1016	180	U	14	180
PCB-1221	180	U	14	180
PCB-1232	180	U	14	180
PCB-1242	720		14	180
PCB-1248	180	U	14	180
PCB-1254	1100		15	180
PCB-1260	890		15	180

Surrogate	%Rec		Acceptance Limits
Tetrachloro-m-xylene	90		24 - 150
DCB Decachlorobiphenyl	190	*	24 - 150

Method: 8082
Preparation: 3550B
Dilution: 5.0
Date Analyzed: 06/23/2009 1222
Date Prepared: 06/22/2009 1349

Analysis Batch: 220-28393
Prep Batch: 220-28341

Instrument ID: HP 6890 dual ECD
Lab File ID: C90431050.D
Initial Weight/Volume: 30.20 g
Final Weight/Volume: 10 mL
Injection Volume: 1.0 uL
Column ID: SECONDARY

Surrogate	%Rec		Acceptance Limits
Tetrachloro-m-xylene	85		24 - 150
DCB Decachlorobiphenyl	188	*	24 - 150

Client: STV Incorporated

Job Number: 220-9412-1
Sdg Number: 220-9412

Client Sample ID: S-1

Lab Sample ID: 220-9412-3
Client Matrix: Solid

Date Sampled: 06/19/2009 1045
Date Received: 06/20/2009 0748

8151A Herbicides (GC)-TCLP

Method: 8151A
Preparation: 8151A
Dilution: 1.0
Date Analyzed: 06/26/2009 1622
Date Prepared: 06/24/2009 1009
Date Leached: 06/23/2009 1520

Analysis Batch: 680-141545
Prep Batch: 680-141206
Leachate Batch: 680-141157

Instrument ID: GC SemiVolatiles - S
Lab File ID: sf26008.d
Initial Weight/Volume: 10 mL
Final Weight/Volume: 10 mL
Injection Volume: 1 uL
Column ID: PRIMARY

Analyte	DryWt Corrected: N	Result (mg/L)	Qualifier	MDL	RL
2,4-D		0.050	U	0.050	0.050
Silvex (2,4,5-TP)		0.050	U	0.050	0.050

Surrogate	%Rec	Acceptance Limits
DCAA	104	50 - 150

Client: STV Incorporated

Job Number: 220-9412-1
Sdg Number: 220-9412

Client Sample ID: **S-1**

Lab Sample ID: 220-9412-3
Client Matrix: Solid
% Moisture: 56.4
Date Sampled: 06/19/2009 1045
Date Received: 06/20/2009 0748

8151A Herbicides (GC)

Method: 8151A
Preparation: 8151A
Dilution: 20
Date Analyzed: 06/26/2009 2121
Date Prepared: 06/23/2009 1302
Analysis Batch: 680-141545
Prep Batch: 680-141123
Instrument ID: GC SemiVolatiles - S
Lab File ID: sf26024.d
Initial Weight/Volume: 30.2 g
Final Weight/Volume: 10 mL
Injection Volume: 1 uL
Column ID: PRIMARY

Analyte	DryWt Corrected: Y	Result (ug/Kg)	Qualifier	MDL	RL
2,4-D		380	U	230	380
2,4-DB		380	U	140	380
2,4,5-T		380	U	100	380
Silvex (2,4,5-TP)		380	U	73	380
Dalapon		15000	U	130	15000
Dicamba		380	U	86	380
Dichlorprop		380	U	50	380
Dinoseb		4600	U	210	4600
MCPA		91000	U *	8600	91000
Mecoprop		91000	U	7700	91000
Pentachlorophenol		380	U	19	380

Surrogate	%Rec		Acceptance Limits
DCAA	0	D	58 - 110

Client: STV Incorporated

Job Number: 220-9412-1
Sdg Number: 220-9412

Client Sample ID: **S-2**

Lab Sample ID: 220-9412-4
Client Matrix: Solid

Date Sampled: 06/19/2009 1115
Date Received: 06/20/2009 0748

8151A Herbicides (GC)-TCLP

Method: 8151A
Preparation: 8151A
Dilution: 1.0
Date Analyzed: 06/26/2009 1641
Date Prepared: 06/24/2009 1009
Date Leached: 06/23/2009 1520

Analysis Batch: 680-141545
Prep Batch: 680-141206
Leachate Batch: 680-141157

Instrument ID: GC SemiVolatiles - S
Lab File ID: sf26009.d
Initial Weight/Volume: 10 mL
Final Weight/Volume: 10 mL
Injection Volume: 1 uL
Column ID: PRIMARY

Analyte	DryWt Corrected: N	Result (mg/L)	Qualifier	MDL	RL
2,4-D		0.050	U	0.050	0.050
Silvex (2,4,5-TP)		0.050	U	0.050	0.050

Surrogate	%Rec	Acceptance Limits
DCAA	96	50 - 150

Client: STV Incorporated

Job Number: 220-9412-1
Sdg Number: 220-9412

Client Sample ID: **S-2**

Lab Sample ID: 220-9412-4
Client Matrix: Solid
% Moisture: 53.7
Date Sampled: 06/19/2009 1115
Date Received: 06/20/2009 0748

8151A Herbicides (GC)

Method: 8151A
Preparation: 8151A
Dilution: 1.0
Date Analyzed: 06/26/2009 1834
Date Prepared: 06/23/2009 1302
Analysis Batch: 680-141545
Prep Batch: 680-141123
Instrument ID: GC SemiVolatiles - S
Lab File ID: sf26015.d
Initial Weight/Volume: 30.2 g
Final Weight/Volume: 10 mL
Injection Volume: 1 uL
Column ID: PRIMARY

Analyte	DryWt Corrected: Y	Result (ug/Kg)	Qualifier	MDL	RL
2,4-D		18	U	11	18
2,4-DB		18	U	6.4	18
2,4,5-T		18	U	4.9	18
Silvex (2,4,5-TP)		18	U	3.4	18
Dalapon		710	U	6.2	710
Dicamba		18	U	4.1	18
Dichlorprop		18	U	2.4	18
Dinoseb		210	U	9.9	210
MCPA		4300	U *	410	4300
Mecoprop		4300	U	360	4300
Pentachlorophenol		18	U	0.90	18

Surrogate	%Rec		Acceptance Limits
DCAA	1240	E *	58 - 110

Client: STV Incorporated

Job Number: 220-9412-1
Sdg Number: 220-9412

Client Sample ID: **W-TANK**

Lab Sample ID: 220-9412-1
Client Matrix: Water

Date Sampled: 06/19/2009 1030
Date Received: 06/20/2009 0748

6020 Metals (ICP/MS)

Method: 6020
Preparation: 3010A
Dilution: 5.0
Date Analyzed: 06/24/2009 1248
Date Prepared: 06/23/2009 1156

Analysis Batch: 220-28480
Prep Batch: 220-28380

Instrument ID: Agilent ICPMS
Lab File ID: N/A
Initial Weight/Volume: 100 mL
Final Weight/Volume: 500 mL

Analyte	Result (ug/L)	Qualifier	MDL	RL
Silver	12.5	U	2.5	12.5
Arsenic	25.8		2.5	12.5
Beryllium	12.5	U	2.5	12.5
Cadmium	13.1		2.5	12.5
Chromium	101		5.0	25.0
Copper	290		2.5	25.0
Nickel	126		2.5	12.5
Lead	280		2.5	12.5
Antimony	16.2	J	5.0	20.0
Selenium	25.0	U	5.0	25.0
Thallium	17.5	U	5.0	17.5
Zinc	506		12.5	125

7470A Mercury (CVAA)

Method: 7470A
Preparation: 7470A
Dilution: 1.0
Date Analyzed: 06/23/2009 1451
Date Prepared: 06/23/2009 1121

Analysis Batch: 220-28406
Prep Batch: 220-28377

Instrument ID: Perkin Elmer FIMS
Lab File ID: N/A
Initial Weight/Volume: 25 mL
Final Weight/Volume: 50 mL

Analyte	Result (ug/L)	Qualifier	MDL	RL
Mercury	0.44		0.060	0.20

Client: STV Incorporated

Job Number: 220-9412-1
Sdg Number: 220-9412

Client Sample ID: **W-EXC**

Lab Sample ID: 220-9412-2
Client Matrix: Water

Date Sampled: 06/19/2009 1000
Date Received: 06/20/2009 0748

6020 Metals (ICP/MS)

Method: 6020
Preparation: 3010A
Dilution: 5.0
Date Analyzed: 06/24/2009 1252
Date Prepared: 06/23/2009 1156

Analysis Batch: 220-28480
Prep Batch: 220-28380

Instrument ID: Agilent ICPMS
Lab File ID: N/A
Initial Weight/Volume: 100 mL
Final Weight/Volume: 500 mL

Analyte	Result (ug/L)	Qualifier	MDL	RL
Silver	12.5	U	2.5	12.5
Arsenic	7.3	J	2.5	12.5
Beryllium	12.5	U	2.5	12.5
Cadmium	12.5	U	2.5	12.5
Chromium	18.4	J	5.0	25.0
Copper	54.8		2.5	25.0
Nickel	30.0		2.5	12.5
Lead	47.0		2.5	12.5
Antimony	20.0	U	5.0	20.0
Selenium	25.0	U	5.0	25.0
Thallium	17.5	U	5.0	17.5
Zinc	103	J	12.5	125

7470A Mercury (CVAA)

Method: 7470A
Preparation: 7470A
Dilution: 1.0
Date Analyzed: 06/23/2009 1452
Date Prepared: 06/23/2009 1121

Analysis Batch: 220-28406
Prep Batch: 220-28377

Instrument ID: Perkin Elmer FIMS
Lab File ID: N/A
Initial Weight/Volume: 25 mL
Final Weight/Volume: 50 mL

Analyte	Result (ug/L)	Qualifier	MDL	RL
Mercury	0.20	U	0.060	0.20

Client: STV Incorporated

Job Number: 220-9412-1
Sdg Number: 220-9412

Client Sample ID: **S-1**

Lab Sample ID: 220-9412-3
Client Matrix: Solid

Date Sampled: 06/19/2009 1045
Date Received: 06/20/2009 0748

6010B Metals (ICP)-TCLP

Method:	6010B	Analysis Batch: 220-28513		Instrument ID:	Perkin Elmer ICP
Preparation:	3010A	Prep Batch: 220-28372		Lab File ID:	N/A
Dilution:	1.0	Leachate Batch: 220-28369		Initial Weight/Volume:	20 mL
Date Analyzed:	06/25/2009 1438			Final Weight/Volume:	50 mL
Date Prepared:	06/23/2009 1038				
Date Leached:	06/22/2009 1600				

Analyte	DryWt Corrected: N	Result (mg/L)	Qualifier	MDL	RL
Arsenic		0.064	J	0.020	0.075
Barium		0.33		0.0012	0.025
Cadmium		0.025	U	0.0050	0.025
Chromium		0.023	J	0.0025	0.025
Lead		0.075	U	0.012	0.075
Selenium		0.19	U	0.062	0.19
Silver		0.025	U	0.0012	0.025

6020 Metals (ICP/MS)

Method:	6020	Analysis Batch: 220-28480		Instrument ID:	Agilent ICPMS
Preparation:	3050B	Prep Batch: 220-28339		Lab File ID:	N/A
Dilution:	1.0			Initial Weight/Volume:	1.15 g
Date Analyzed:	06/24/2009 1331			Final Weight/Volume:	1000 mL
Date Prepared:	06/22/2009 1337				

Analyte	DryWt Corrected: Y	Result (mg/Kg)	Qualifier	MDL	RL
Silver		11.2		0.20	1.0
Arsenic		45.6		0.20	1.0
Beryllium		0.70	J	0.30	1.0
Cadmium		51.6		0.20	1.0
Chromium		342		0.40	2.0
Copper		974		0.20	2.0
Nickel		392		0.20	1.0
Lead		607		0.20	1.0
Antimony		8.5		0.40	1.6
Selenium		8.8		0.60	2.0
Thallium		0.56	J	0.40	1.4
Zinc		1350		1.0	10

Client: STV Incorporated

Job Number: 220-9412-1
Sdg Number: 220-9412

Client Sample ID: **S-1**

Lab Sample ID: 220-9412-3
Client Matrix: Solid

Date Sampled: 06/19/2009 1045
Date Received: 06/20/2009 0748

7470A Mercury (CVAA)-TCLP

Method:	7470A	Analysis Batch: 220-28406		Instrument ID:	Perkin Elmer FIMS
Preparation:	7470A	Prep Batch: 220-28377		Lab File ID:	N/A
Dilution:	1.0	Leachate Batch: 220-28369		Initial Weight/Volume:	5 mL
Date Analyzed:	06/23/2009 1515			Final Weight/Volume:	50 mL
Date Prepared:	06/23/2009 1121				
Date Leached:	06/22/2009 1600				

Analyte	DryWt Corrected: N	Result (mg/L)	Qualifier	MDL	RL
Mercury		0.0020	U	0.0010	0.0020

7471A Mercury (CVAA)

Method:	7471A	Analysis Batch: 220-28474		Instrument ID:	Perkin Elmer FIMS
Preparation:	7471A	Prep Batch: 220-28373		Lab File ID:	N/A
Dilution:	5.0			Initial Weight/Volume:	0.62 g
Date Analyzed:	06/24/2009 1546			Final Weight/Volume:	50 mL
Date Prepared:	06/23/2009 1058				

Analyte	DryWt Corrected: Y	Result (mg/Kg)	Qualifier	MDL	RL
Mercury		2.4		0.044	0.55

Client: STV Incorporated

Job Number: 220-9412-1
Sdg Number: 220-9412

Client Sample ID: **S-2**

Lab Sample ID: 220-9412-4
Client Matrix: Solid

Date Sampled: 06/19/2009 1115
Date Received: 06/20/2009 0748

6010B Metals (ICP)-TCLP

Method: 6010B
Preparation: 3010A
Dilution: 1.0
Date Analyzed: 06/25/2009 1441
Date Prepared: 06/23/2009 1038
Date Leached: 06/22/2009 1600

Analysis Batch: 220-28513
Prep Batch: 220-28372
Leachate Batch: 220-28369

Instrument ID: Perkin Elmer ICP
Lab File ID: N/A
Initial Weight/Volume: 20 mL
Final Weight/Volume: 50 mL

Analyte	DryWt Corrected: N	Result (mg/L)	Qualifier	MDL	RL
Arsenic		0.075	U	0.020	0.075
Barium		0.34		0.0012	0.025
Cadmium		0.025	U	0.0050	0.025
Chromium		0.038		0.0025	0.025
Lead		0.075	U	0.012	0.075
Selenium		0.19	U	0.062	0.19
Silver		0.025	U	0.0012	0.025

6020 Metals (ICP/MS)

Method: 6020
Preparation: 3050B
Dilution: 1.0
Date Analyzed: 06/24/2009 1348
Date Prepared: 06/22/2009 1337

Analysis Batch: 220-28480
Prep Batch: 220-28339

Instrument ID: Agilent ICPMS
Lab File ID: N/A
Initial Weight/Volume: 1.45 g
Final Weight/Volume: 1000 mL

Analyte	DryWt Corrected: Y	Result (mg/Kg)	Qualifier	MDL	RL
Silver		19.5		0.15	0.74
Arsenic		34.0		0.15	0.74
Beryllium		0.80		0.22	0.74
Cadmium		104		0.15	0.74
Chromium		530		0.30	1.5
Copper		1450		0.15	1.5
Nickel		337		0.15	0.74
Lead		1370		0.15	0.74
Antimony		7.3		0.30	1.2
Selenium		5.0		0.45	1.5
Thallium		0.31	J	0.30	1.0
Zinc		2240		0.74	7.4

Client: STV Incorporated

Job Number: 220-9412-1
Sdg Number: 220-9412

Client Sample ID: **S-2**

Lab Sample ID: 220-9412-4
Client Matrix: Solid

Date Sampled: 06/19/2009 1115
Date Received: 06/20/2009 0748

7470A Mercury (CVAA)-TCLP

Method: 7470A
Preparation: 7470A
Dilution: 1.0
Date Analyzed: 06/23/2009 1516
Date Prepared: 06/23/2009 1121
Date Leached: 06/22/2009 1600

Analysis Batch: 220-28406
Prep Batch: 220-28377
Leachate Batch: 220-28369

Instrument ID: Perkin Elmer FIMS
Lab File ID: N/A
Initial Weight/Volume: 5 mL
Final Weight/Volume: 50 mL

Analyte	DryWt Corrected: N	Result (mg/L)	Qualifier	MDL	RL
Mercury		0.0020	U	0.0010	0.0020

7471A Mercury (CVAA)

Method: 7471A
Preparation: 7471A
Dilution: 5.0
Date Analyzed: 06/24/2009 1547
Date Prepared: 06/23/2009 1058

Analysis Batch: 220-28474
Prep Batch: 220-28373

Instrument ID: Perkin Elmer FIMS
Lab File ID: N/A
Initial Weight/Volume: 0.60 g
Final Weight/Volume: 50 mL

Analyte	DryWt Corrected: Y	Result (mg/Kg)	Qualifier	MDL	RL
Mercury		2.6		0.043	0.54

General Chemistry

Client Sample ID: S-1

Lab Sample ID: 220-9412-3
Client Matrix: Solid

% Moisture: 56.4

Date Sampled: 06/19/2009 1045
Date Received: 06/20/2009 0748

Analyte	Result	Qual	Units	MDL	RL	Dil	Method
Chromium, hexavalent	2.2	U	mg/Kg	0.24	2.2	1.0	7196A
	Anly Batch: 680-141487	Date Analyzed		06/26/2009 1319		DryWt Corrected: Y	
	Prep Batch: 680-141389	Date Prepared:		06/25/2009 1528			

Analyte	Result	Qual	Units	RL	RL	Dil	Method
Ignitability	neg		mm/sec	2.2	2.2	1.0	1030
	Anly Batch: 220-28346	Date Analyzed		06/22/2009 1446		DryWt Corrected: N	
Temperature	1890		Fahrenheit	1.00	1.00	1.0	1030
	Anly Batch: 220-28346	Date Analyzed		06/22/2009 1446		DryWt Corrected: N	
Cyanide, Reactive	0.50	U	mg/Kg	0.50	0.50	1.0	9012
	Anly Batch: 220-28401	Date Analyzed		06/23/2009 1344		DryWt Corrected: N	
	Prep Batch: 220-28376	Date Prepared:		06/22/2009 1425			
Sulfide, Reactive	372		mg/Kg	20.0	20.0	1.0	9034
	Anly Batch: 220-28438	Date Analyzed		06/24/2009 1042		DryWt Corrected: N	
	Prep Batch: 220-28436	Date Prepared:		06/22/2009 1505			
pH	8.52	HF	SU	0.100	0.100	1.0	9045C
	Anly Batch: 220-28443	Date Analyzed		06/24/2009 1213		DryWt Corrected: N	
Percent Moisture	56.4		%	0.10	0.10	1.0	Moisture
	Anly Batch: 220-28326	Date Analyzed		06/22/2009 1138			
Percent Solids	43.6		%	0.10	0.10	1.0	Moisture
	Anly Batch: 220-28326	Date Analyzed		06/22/2009 1138			

General Chemistry

Client Sample ID: S-2

Lab Sample ID: 220-9412-4
Client Matrix: Solid

% Moisture: 53.7

Date Sampled: 06/19/2009 1115
Date Received: 06/20/2009 0748

Analyte	Result	Qual	Units	MDL	RL	Dil	Method
Chromium, hexavalent	2.1	U	mg/Kg	0.23	2.1	1.0	7196A
	Anly Batch: 680-141487	Date Analyzed		06/26/2009 1319		DryWt Corrected: Y	
	Prep Batch: 680-141389	Date Prepared:		06/25/2009 1528			

Analyte	Result	Qual	Units	RL	RL	Dil	Method
Ignitability	neg		mm/sec	2.2	2.2	1.0	1030
	Anly Batch: 220-28346	Date Analyzed		06/22/2009 1448		DryWt Corrected: N	
Temperature	1890		Fahrenheit	1.00	1.00	1.0	1030
	Anly Batch: 220-28346	Date Analyzed		06/22/2009 1448		DryWt Corrected: N	
Cyanide, Reactive	0.50	U	mg/Kg	0.50	0.50	1.0	9012
	Anly Batch: 220-28401	Date Analyzed		06/23/2009 1345		DryWt Corrected: N	
	Prep Batch: 220-28376	Date Prepared:		06/22/2009 1425			
Sulfide, Reactive	644		mg/Kg	19.9	19.9	1.0	9034
	Anly Batch: 220-28438	Date Analyzed		06/24/2009 1051		DryWt Corrected: N	
	Prep Batch: 220-28436	Date Prepared:		06/22/2009 1505			
pH	8.34	HF	SU	0.100	0.100	1.0	9045C
	Anly Batch: 220-28443	Date Analyzed		06/24/2009 1219		DryWt Corrected: N	
Percent Moisture	53.7		%	0.10	0.10	1.0	Moisture
	Anly Batch: 220-28326	Date Analyzed		06/22/2009 1138			
Percent Solids	46.3		%	0.10	0.10	1.0	Moisture
	Anly Batch: 220-28326	Date Analyzed		06/22/2009 1138			

DATA REPORTING QUALIFIERS

Client: STV Incorporated

Job Number: 220-9412-1
Sdg Number: 220-9412

Lab Section	Qualifier	Description
GC/MS VOA		
	U	Analyzed for but not detected.
	J	Indicates an estimated value.
	*	LCS or LCSD exceeds the control limits
	*	Surrogate exceeds the control limit
	B	The analyte was found in an associated blank, as well as in the sample.
GC/MS Semi VOA		
	U	Analyzed for but not detected.
	J	Indicates an estimated value.
	*	LCS or LCSD exceeds the control limits
GC VOA		
	U	Analyzed for but not detected.
	J	Indicates an estimated value.
GC Semi VOA		
	U	Analyzed for but not detected.
	E	Compound concentration exceeds the upper level of the calibration range of the instrument for that specific analysis.
	*	Duplicate RPD exceeds control limits
	J	Indicates an estimated value.
	*	LCS or LCSD exceeds the control limits
	*	MS or MSD exceeds the control limits
	*	Surrogate exceeds the control limit
	D	The reported value is from a dilution.

DATA REPORTING QUALIFIERS

Client: STV Incorporated

Job Number: 220-9412-1
Sdg Number: 220-9412

Lab Section	Qualifier	Description
Metals		
	U	Indicates analyzed for but not detected.
	4	MS, MSD: The analyte present in the original sample is 4 times greater than the matrix spike concentration; therefore, control limits are not applicable.
	J	Sample result is greater than the MDL but below the CRDL
	N	Spiked sample recovery is not within control limits.
General Chemistry		
	HF	Field parameter with a holding time of 15 minutes
	U	Indicates analyzed for but not detected.

Chain of Custody Record

SEVERN TRENT **STL**
Severn Trent Laboratories, Inc.

9412

STL-4124 (0901)

Client: STV Inc	Project Manager: Mike Tumalty	Date: 6/19/09	Chain of Custody Number: 351398
Address: 225 Park Ave South	Telephone Number (Area Code)/Fax Number: (212) 614-3369	Lab Number: per B.C. 6/22 JMD	Page 1 of 1
City: New York; State: NY; Zip Code: 10003	Site Contact: Brian Connolly; Lab Contact: Jill		
Project Name and Location (State): Borden Ave Bridge, New York	Carrier/Waybill Number:		
Contract/Purchase Order/Quote No.			

Analysis (Attach list if more space is needed)

Sample I.D. No. and Description (Containers for each sample may be combined on one line)	Date	Time	Matrix: Air	Aqueous	Sed.	Soil	Containers & Preservatives: Unpres.	H2SO4	HNO3	HCl	NaOH	ZnAc/NaOH	TCL VOCs	TCL SVOCs	PCBs	Pest/Herb.	PPL METALS	CR (VI)	TCLP	TPHC = DRO/GRO Fingerprint TPHC	Fingerprint TPHC	DRO/GRO	RCRA char	per B.C. 6/22/09 - JMD	Special Instructions/ Conditions of Receipt
	6/19/09																								
1) W-TANK		1030											X	X	X		X			X					All Containers in 7.8°C cooler
2) W-EXC		1000											X	X	X		X			X					All Containers in 7.8°C cooler
3) S-1		1045											X	X	X	X	X	X	X	X	X	X	X		KB 6/20/09
4) S-2		1115											X	X	X	X	X	X	X	X	X	X	X		

Possible Hazard Identification: ☑ Non-Hazard ☐ Flammable ☐ Skin Irritant ☐ Poison B ☐ Unknown

Sample Disposal: ☐ Return To Client ☐ Disposal By Lab ☐ Archive For _____ Months (A fee may be assessed if samples are retained longer than 1 month)

Turn Around Time Required: ☑ 24 Hours ☐ 48 Hours ☐ 7 Days ☐ 14 Days ☐ 21 Days ☐ Other _____

QC Requirements (Specify): Samples collected by Richard Hart (516) 328-1194 if question

	Date	Time		Date	Time
1. Relinquished By: [signature]	6/19/09	3:05	1. Received By: [signature]	6/19/09	3:05
2. Relinquished By:			2. Received By: [signature]	6/20/09	748
3. Relinquished By:			3. Received By:		

Comments: 0.6°C, 7.8°C gun #1 bags of melted ice.

PASSED RAD SCREEN

DISTRIBUTION: WHITE - Returned to Client with Report; CANARY - Stays with the Sample; PINK - Field Copy

06/29/2009

ESTAMERICA CONNECTICUT
RESERVATIVE RECORD

Job Number:

Client:

Client Project:

Lab Number	Preservative	pH	Adjustment (mLs)	pH after Adjustment	Preservative Lot Number	Initials	Date
9412- 01	HNO3	<2	N/A	N/A	N/A	KB	6/20/09
02	↓	<2	↓	↓	↓	↓	↓
01	HCL	<2					
02	↓	<2					

TestAmerica - Connecticut
Internal Chain-of-Custody

220-9412
STV- Borden Ave Bridge

24 hr TAT

Trip Blank:

QC: Air:

FB:

Soil: 3-4 Water: 1-2

Date Received: 6/20/09

Sample #s: 1-4

Locations: 99D, R-1U, A5, R-22

Laboratory Sample #	Signature-Sample Removal	Date	Time	Reason	Signature-Sample Return	Date	Time
1-4		6/20/09	1105	Ext.	Used		
3-4		6/20/09	1105	Ext.	1710	6/20/09	1710
3-4		6/20/09	1030	VOA TRIP		6/20/09	1700
3-4	MC	6/22	12:20	MTL		6/22/09	1430
1,2		6/22	13:30	VOA			
3,4		6-22	13:50	EXT		6/22	15:10
3-4		6-22	1515	MTL		6-22	1610
3-4		6-23	1025	MTL		6-23	1300
1-2	MC	6/23	10:55	MTL	MC	6/23	13:45
1,2		6/24/09	10:40	pH		6/24/09	12:30

Login Sample Receipt Check List

Client: STV Incorporated

Job Number: 220-9412-1
SDG Number: 220-9412

Login Number: 9412
Creator: Blocker, Kristina
List Number: 1

List Source: TestAmerica Connecticut

Question	T / F/ NA	Comment
Radioactivity either was not measured or, if measured, is at or below background	True	
The cooler's custody seal, if present, is intact.	True	
The cooler or samples do not appear to have been compromised or tampered with.	True	
Samples were received on ice.	True	7.8C cooler bags of melted ice/water.
Cooler Temperature is acceptable.	False	
Cooler Temperature is recorded.	True	0.6C, 7.8C
COC is present.	True	
COC is filled out in ink and legible.	True	
COC is filled out with all pertinent information.	True	
There are no discrepancies between the sample IDs on the containers and the COC.	True	
Samples are received within Holding Time.	True	
Sample containers have legible labels.	True	
Containers are not broken or leaking.	True	
Sample collection date/times are provided.	True	
Appropriate sample containers are used.	True	
Sample bottles are completely filled.	True	
There is sufficient vol. for all requested analyses, incl. any requested MS/MSDs	True	
VOA sample vials do not have headspace or bubble is <6mm (1/4") in diameter.	True	
If necessary, staff have been informed of any short hold time or quick TAT needs	True	
Multiphasic samples are not present.	True	
Samples do not require splitting or compositing.	True	
Is the Field Sampler's name present on COC?	True	

Login Sample Receipt Check List

Client: STV Incorporated

Job Number: 220-9412-1
SDG Number: 220-9412

Login Number: 9412
Creator: Daughtry, Beth
List Number: 1

List Source: TestAmerica Savannah
List Creation: 06/23/09 10:36 AM

Question	T / F/ NA	Comment
Radioactivity either was not measured or, if measured, is at or below background	N/A	
The cooler's custody seal, if present, is intact.	True	
The cooler or samples do not appear to have been compromised or tampered with.	True	
Samples were received on ice.	True	
Cooler Temperature is acceptable.	True	
Cooler Temperature is recorded.	True	
COC is present.	True	
COC is filled out in ink and legible.	True	
COC is filled out with all pertinent information.	True	
There are no discrepancies between the sample IDs on the containers and the COC.	True	
Samples are received within Holding Time.	True	
Sample containers have legible labels.	True	
Containers are not broken or leaking.	True	
Sample collection date/times are provided.	True	
Appropriate sample containers are used.	True	
Sample bottles are completely filled.	True	
There is sufficient vol. for all requested analyses, incl. any requested MS/MSDs	True	
VOA sample vials do not have headspace or bubble is <6mm (1/4") in diameter.	True	
If necessary, staff have been informed of any short hold time or quick TAT needs	True	
Multiphasic samples are not present.	N/A	
Samples do not require splitting or compositing.	N/A	
Is the Field Sampler's name present on COC?	N/A	

APPENDIX C - YORK ANALYTICAL DATA REPORT

YORK
ANALYTICAL LABORATORIES, INC.

Technical Report

prepared for:

Moretrench American Corporation
51 Smart Ave
Yonkers, NY 10704
Attention: Joe Mahon

Report Date: 6/25/2009
Re: Client Project ID: Borden Avenue Bridge, Queens, NY
York Project No.: 09060867

CT License No. PH-0723 New York License No. 10854 New Jersey License No. CT-005 PA Reg. 68-04440

120 RESEARCH DRIVE STRATFORD, CT 06615 (203) 325-1371 FAX (203) 357-0166

Report Date: 6/25/2009
Client Project ID: Borden Avenue Bridge, Queens, NY
York Project No.: 09060867

Moretrench American Corporation
51 Smart Ave
Yonkers, NY 10704
Attention: Joe Mahon

Purpose and Results

This report contains the analytical data for the sample(s) identified on the attached chain-of-custody received in our laboratory on 06/22/09. The project was identified as your project "Borden Avenue Bridge, Queens, NY".

The analysis was conducted utilizing appropriate EPA, Standard Methods, and ASTM methods as detailed in the data summary tables.

All samples were received in proper condition meeting the NELAC acceptance requirements for environmental samples except those indicated under the Notes section of this report.

All the analyses met the method and laboratory standard operating procedure requirements except as indicated under the Notes section of this report, or as indicated by any data flags, the meaning of which is explained in the attachment to this report, if applicable.

The results of the analyses, which are all reported on an as-received basis unless otherwise noted, are summarized in the following table(s).

Analysis Results

Client Sample ID			Excavation within project site				
Collection Date			06/19/09				
York Sample ID			09060867-01				
Matrix			WATER				
Parameter	Method	Units	Results	MDL	Analysis Date	Analysis Time	Analyst
Volatiles, 601/602+MTBE+ Xylenes	EPA 601/602	ug/L	---	---	06/23/09	14:31	SS
1,1,1-Trichloroethane			Not detected	5.0	06/23/09	14:31	SS
1,1,2,2-Tetrachloroethane			Not detected	5.0	06/23/09	14:31	SS
1,1,2-Trichloroethane			Not detected	5.0	06/23/09	14:31	SS
1,1-Dichloroethane			Not detected	5.0	06/23/09	14:31	SS
1,1-Dichloroethylene			Not detected	5.0	06/23/09	14:31	SS

YORK

Client Sample ID			Excavation within project site				
Collection Date			06/19/09				
York Sample ID			09060867-01				
Matrix			WATER				
Parameter	Method	Units	Results	MDL	Analysis Date	Analysis Time	Analyst
Volatiles; 601/602+MTBE+ Xylenes	EPA 601/602	ug/L	---	---	06/23/09	14:31	SS
1,2-Dichlorobenzene			Not detected	5.0	06/23/09	14:31	SS
1,2-Dichloroethane			Not detected	5.0	06/23/09	14:31	SS
1,2-Dichloroethylene			Not detected	5.0	06/23/09	14:31	SS
1,2-Dichloropropane			Not detected	5.0	06/23/09	14:31	SS
1,3-Dichlorobenzene			Not detected	5.0	06/23/09	14:31	SS
1,4-Dichlorobenzene			Not detected	5.0	06/23/09	14:31	SS
2-Chloroethylvinyl ether			Not detected	5.0	06/23/09	14:31	SS
Benzene			Not detected	5.0	06/23/09	14:31	SS
Bromodichloromethane			Not detected	5.0	06/23/09	14:31	SS
Bromoform			Not detected	5.0	06/23/09	14:31	SS
Bromomethane			Not detected	5.0	06/23/09	14:31	SS
Carbon tetrachloride			Not detected	5.0	06/23/09	14:31	SS
Chlorobenzene			Not detected	5.0	06/23/09	14:31	SS
Chloroethane			Not detected	5.0	06/23/09	14:31	SS
Chloroform			Not detected	5.0	06/23/09	14:31	SS
Chloromethane			Not detected	5.0	06/23/09	14:31	SS
cis-1,3-Dichloropropylene			Not detected	5.0	06/23/09	14:31	SS
Dibromodichloromethane			Not detected	5.0	06/23/09	14:31	SS
Dichlorodifluoromethane			Not detected	5.0	06/23/09	14:31	SS
Ethylbenzene			Not detected	5.0	06/23/09	14:31	SS
m- & p-Xylenes			Not detected	5.0	06/23/09	14:31	SS
Methyl tert butyl ether (MTBE)			Not detected	5.0	06/23/09	14:31	SS
Methylene chloride			Not detected	5.0	06/23/09	14:31	SS
o-Xylene			Not detected	5.0	06/23/09	14:31	SS
Tetrachloroethylene			Not detected	5.0	06/23/09	14:31	SS
Toluene			Not detected	5.0	06/23/09	14:31	SS
trans-1,3-Dichloropropylene			Not detected	5.0	06/23/09	14:31	SS
Trichloroethylene			Not detected	5.0	06/23/09	14:31	SS
Trichlorofluoromethane			Not detected	5.0	06/23/09	14:31	SS
Vinyl chloride			Not detected	5.0	06/23/09	14:31	SS
Metals, Priority Pollutant List	EPA 200.7	mg/L	---	---	06/25/09	14:43	MW
Antimony			0.020	0.006	06/25/09	14:43	MW
Arsenic			0.025	0.004	06/25/09	14:43	MW
Beryllium			Not detected	0.0001	06/25/09	14:43	MW
Cadmium			0.008	0.003	06/25/09	14:43	MW
Chromium			0.049	0.005	06/25/09	14:43	MW
Copper			0.224	0.005	06/25/09	14:43	MW

YORK

Client Sample ID			Excavation within project site				
Collection Date			06/19/09				
York Sample ID			09060867-01				
Matrix			WATER				
Parameter	**Method**	**Units**	**Results**	**MDL**	**Analysis Date**	**Analysis Time**	**Analyst**
Metals, Priority Pollutant List	EPA 200.7	mg/L	---	---	06/25/09	14:43	MW
Lead			0.150	0.003	06/25/09	14:43	MW
Nickel			0.135	0.005	06/25/09	14:43	MW
Selenium			Not detected	0.005	06/25/09	14:43	MW
Silver			Not detected	0.005	06/25/09	14:43	MW
Thallium			Not detected	0.005	06/25/09	14:43	MW
Zinc			0.410	0.005	06/25/09	14:43	MW
Nitrite + Nitrate Nitrogen	SW846-9065/E300m	mg/L	0.08	0.01	06/25/09	14:22	TD
pH	SM 4500-H+ B	units	7.65	---	06/25/09	14:22	TD
Total Settleable Solids	EPA 160.5	ml/l	0.40	0.1	06/25/09	14:22	TD

Units Key: For Waters/Liquids: mg/L = ppm ; ug/L = ppb For Soils/Solids: mg/kg = ppm ; ug/kg = ppb

Notes for York Project No. 09060867

1. The MDL (Minimum Detectable Limit) reported is adjusted for any dilution necessary due to the levels of target and/or non-target analytes and matrix interference. This MDL is the REPORTING LIMIT and is based upon the lowest standard utilized for calibration where applicable.
2. Samples are retained for a period of thirty days after submittal of report, unless other arrangements are made.
3. York's liability for the above data is limited to the dollar value paid to York for the referenced project.
4. This report shall not be reproduced without the written approval of York Analytical Laboratories, Inc.
5. All samples were received in proper condition for analysis with proper documentation.
6. All analyses conducted met method or Laboratory SOP requirements.
7. It is noted that no analyses reported herein were subcontracted to another laboratory.

Approved By: Robert Q. Bradley
Managing Director

Date: 6/25/2009

YORK

YORK
ANALYTICAL LABORATORIES, INC.
120 RESEARCH DRIVE STRATFORD, CT 06615
(203) 325-1371 FAX (203) 357-0166

Field Chain-of-Custody Record

Page ___ of ___

09060867
09060772

Company Name	Report To:	Invoice To:	Project ID/No.	
Moretrench American Corp.	Joe Mahon		Borden Avenue Bridge Queens, NY	Joseph Mahon Samples Collected By (Signature) Joseph Mahon Name (Printed)

Sample No.	Location/ID	Date Sampled	Sample Matrix: Water	Soil	Air	OTHER	ANALYSES REQUESTED	Container Description(s)
	Excavation within project site.	6/19/09	✓				DEC List	(2) 40ml HCL (1) H_2SO_4 Liter (1) HNO_3 Plastic (1) Unp. Liter Amber

Chain-of-Custody Record

Bottles Relinquished from Lab by	Date/Time	Sample Relinquished by	Date/Time	Sample Received by	Date/Time
		Joseph Mahon		H.B. Horton	6-22-09 9:53AM
Bottles Received in Field by	**Date/Time**	**Sample Relinquished by**	**Date/Time**	**Sample Received in LAB by**	**Date/Time**
				[signature]	6-22-09 16303.9°C

Comments/Special Instructions

Turn-Around Time

___ Standard X RUSH(define) 2 days

APPENDIX D – WATER TREATMENT PLAN

MORETRENCH
....since 1931

SUBMITTAL

MORETRENCH
...since 1931

Borden Avenue Bridge

26 Borden Avenue
Queens, NY

WATER TREATMENT PLAN

July 23, 2009

Presented to:

Maracap Construction Industries Inc.
11018 15th Avenue
College Point, NY 11356

MORETRENCH
....since 1931

Borden Avenue Bridge

26 Borden Avenue
Queens, NY

WATER TREATMENT PLAN

Submitted to: Maracap Construction Industries Inc.

Prepared by

Moretrench American Corporation
51 Smart Avenue, Yonkers NY 10704

The submitted plan is based upon sound engineering principles and accepted industry practices and is reasonable for the described application. Responsibility for the design and installation of all structural elements contained herein, including but not limited to sheeting, underpinning, wood lagging, soldier beams and pilings is by others. Proper operation and supervision of the attached plan and construction of same are the responsibility of others as specified here-in.

MORETRENCH
....since 1931

Table of Contents

System Overview	4
Water Treatment System	5
Operating and Monitoring	8

Appendices

Appendix A	Treatment System Layout
Appendix B	Material & Equipment Specifications
Appendix C	System overview

July 23, 2009

MORETRENCH AMERICAN CORPORATION
51 Smart Avenue – Yonkers, NY 10704
(914) 423-1331

System Overview

As a result of the petroleum-impacted sediment encountered during emergency bridge repair work at Borden Avenue Bridge in Queens, NY, Moretrench, under subcontract to Maracap, amended its Dewatering Plan dated July 20, 2009 to include a Water Treatment System described herein. The amended plan addresses the treatment of impacted water from within the cofferdam and run off from the wet sediment stockpiles. The groundwater table will be lowered and withdrawn from the cofferdam through a series of permitted wells from within the confines of the cofferdam and treated on site through a designed water treatment system prior to discharge to the Dutch Kills. A SPDES Permit Equivalent Application is attached to the Corrective Action Plan (CAP) submitted by STV Incorporated on behalf of the New York City Department of Transportation. Please see the Corrective Action Plan for additional details on the project.

The existing sidewalk is approximately at El+19'. The water table is tidal and varies from El+0' to El-4'. All elevations are referenced to the Borough President of Manhattan Datum, which is 2.75' above Mean Sea Level at Sandy Hook, NJ.

Areas that will require dewatering are as follows:

- The bottom of existing abutment to be removed along west side of the embankment which extends to approximately El-18' with a length of approximately 70'.
- The bottom of existing wing walls to be removed on both ends extending to El-4'.
- Installation of new wing walls and abutment to El-18'.

The general subsurface profile consisted of layers of silty sand fill, organic clays silts, varved clay and silty, sandy till, decomposed rock and bedrock. Although the existing stratigraphy varies across the site, it can be summarized as follows:

- The top layer generally consisting of dense clayey silty fine to coarse sand with trace to some gravel, bricks, wood and coal which extends to approximately El-21'.
- The top layer is underlain by soft to very soft organic clayey silt with some sand which extends to approximately El-30'.
- Beneath the organic clayey silt there are alternating varves of grey and light brown stiff silty glacial clay. These varves extend to approximately El-38'.
- Bedrock is at approximately El-70' with approximately 25' of decomposed rock above it.

Water Treatment System

The proposed temporary water treatment system can treat a maximum of 600 gpm of water generated from dewatering activities. The water treatment system has been designed to remove elevated levels of Total Suspended Solids (TSS), Volatile Organic Compounds (VOCs) and Oil & Grease. We have assumed that any metals present in the raw water are associated with the Total Suspended Solids (TSS) and can be removed by coagulation/flocculation/clarification/bag filtration. The temporary treatment system will consist of the following major components:

- One (1) influent settling tank
- One (1) chemical mix tank
- One (1) chemical injection and storage unit
- One (1) bulk settling clarifier
- One (1) sludge pump
- One (1) cone bottom tank
- One (1) duplex centrifugal transfer pump skid
- Three (3) 6-bag filter housings, parallel operation
- Two (2) liquid phase granular activated carbon adsorbers, series operation
- One (1) effluent flow meter

Water from the dewatering system will be directed to the influent settling tank. The settling tank will be elevated (on a man made berm or on cribbing provided by others) to allow the water to flow by gravity to the chemical mix tank. The influent settling tank is constructed of steel and has a total of four (4) over/under weirs to facilitate the settling of solids. The influent settling tank has a nominal volume of 10,000 gallons. At the design water flow rate of 600 gpm, the influent settling tank will provide approximately 17 minutes of detention time. The influent settling tank is constructed with an open top for ease of cleaning.

Water will flow by gravity from the influent settling tank to the chemical mix tank. The chemical mix tank is constructed of steel and has a nominal volume of 10,000 gallons. At the design water flow rate of 600 gpm, the chemical mix tank will provide approximately 17 minutes of detention time. The mix tank is constructed with an open top for ease of cleaning.

A coagulant and flocculent will be injected to facilitate the settling of solids in the raw water stream. A coagulant (such as ADEGA WC-500) is used to change the electrical charge of the fine particles and to cause a destabilization of the particles. The coagulant will be injected directly into a coagulation chamber in the chemical mix tank via a chemical metering pump. Flocculent (such as ADEGA AP-220) is used to bring the charged particles together and to make them heavier which will allow for better settling in the bulk settling clarifier. The flocculent will be provided as a dry powder and will need to be mixed with clean water on-site in order to make the proper liquid solution. The

flocculent solution will then be injected into the flocculation chamber in the chemical mix tank via a chemical metering pump. Two (2) slow electric mixers equipped with VFD controllers in the chemical mix tank ensure that the flocculent is distributed throughout the water and help to agglomerate the particles further. The amount of coagulant/flocculent injected will be determined by an influent flow meter installed in the influent line.

The chemical mix tank will be elevated (on a man made berm or on cribbing provided by others) to allow the water to flow by gravity from the chemical mix tank to the bulk settling clarifier, thus preventing shearing of the agglomerated particles resulting from the addition of the coagulant and flocculent. The bulk settling clarifier is equipped with a number of features that will facilitate both the settling of solids and routine maintenance of the unit. Water to the bulk settling clarifier is directed to an influent chamber. A weir plate extending from the top of the unit forces the water underneath a removable steel basket containing settling tube media. Treated water flows upward through the settling tubes while solids collect and fall to the bottom of the bulk settling clarifier. Tube settlers capture the settleable fine floc that escapes the clarification zone beneath the tube settlers and allows the larger floc to travel to the tank bottom in a more settleable form. The tube settler's channel collects solids into a compact mass which promotes the solids to slide down the tube channel.

Solids and/or sludge that have settled to the bottom of the clarifier will need to be periodically removed to prevent accumulated material from clogging the tube settlers thus reducing the efficiency of the unit. The base of the bulk settling clarifier contains a series of valved clean out ports. Solids/sludge can be pumped from these ports to a sludge holding tank through the use of an electric diaphragm sludge pump. Water decanted from the sludge holding tank can be introduced back to the head of the plant while the remaining solids will need to be periodically disposed of in accordance with all local, state and federal regulations. The waste products from cleaning the clarifier cannot be pumped back to the head of the treatment system. The waste products from cleaning the clarifier will be disposed of in accordance with all local, State and federal regulations.

Clarified water rises above the settling tube media and flows over a final weir plate into the duplex centrifugal pump skid which pumps water through the bag filter skid, and carbon adsorbers. The duplex pump skid will contain an integral control system and two (2) full capacity centrifugal pumps each capable of producing 600 gpm @ approximately 70' TDH (30 psi). The pumps will each be equipped with 25 Hp, 460V, 3 phase, 60 Hz electric motors. The control system will consist of two (2) pump motor starters and four (4) float controls – Pump 1 on, Pump 2 on, Pump 1 & 2 off, and a high level alarm which will activate an alarm light.

The bag filter skid will consist of three (3) multi-bag filter housings, each rated for a maximum flow of 600 gpm, plumbed in parallel. The inlet and outlet of the bag filter skid will be equipped with manifolds complete with isolation valves. Each of the filter

housings will contain six (6) bag filters designed to remove any remaining sediment prior to the resin units. It is anticipated that 5-micron filter bags will be utilized for this project. The inlet and outlet of each of the bag filter housings will be equipped with pressure gauges to monitor the differential pressure across each filter housing. The bag filters should be changed once the differential pressure across the housing reaches 15 to 20 psi. The bag filter housings will be plumbed in parallel such that the bags in one (1) filter housing can be changed while the remaining two (2) filter housings continue to process water at the design water flow rate of up to 600 gpm. Used filters will be disposed of in accordance with all local, state and federal regulations.

If the bag filters are not properly operated and maintained, the differential pressure across the filter housings can rise to the point that the transfer pumps cannot pump water from the bulk settling clarifier faster than water is introduced into the bulk settling clarifier. The water level in the bulk settling clarifier will rise and eventually activate the high level alarm light. If the bag filters are not changed, the water level in the bulk settling clarifier will continue to rise and will eventually overflow.

The carbon adsorbers will each contain 10,000 lbs. of reactivated, granular liquid phase carbon media designed to remove low levels of SVOCs and VOCs such as BTEX (Benzene, Toluene, Ethyl Benzene, and Xylene) prior to discharge. Flexible hose will be provided to configure the carbon adsorbers in series operation. If breakthrough of SVOCs or VOCs occurs on the lead carbon adsorber, the water will temporarily be directed to the lag adsorber. The spent carbon will be removed from the lead adsorber and will be replaced with 10,000 lbs of reactivated carbon media. The spent carbon will be sampled to determine RCRA waste characteristics and will be disposed/reactivated accordingly.
The inlet and outlet of each carbon adsorber will be equipped with a pressure gauge to monitor the differential pressure across the carbon media. The differential pressure across each carbon adsorber should be recorded in a log book on a daily basis. If the differential pressure across a particular carbon adsorber rises to the point that water flow is restricted (as measured by the effluent flow meter), that carbon adsorber should be taken off line temporarily to backwash the media. The inlet and outlet of each carbon adsorber is equipped with fittings and valves to facilitate backwashing. Backwash water should be obtained from a clean water source such as a hydrant or a water truck. The waste water from the backwash process can be directed to the influent settling tank and will be processed through the treatment system.

A 6" diameter mechanical flow meter with a totalizer will be provided at the end of the treatment system to indicate the flow rate and to record the total gallons of water treated. The flow meter has an acceptable flow range of 90 to 1,200 gpm. Flow readings should be recorded daily in a log book.

The individual components of the system will be skid mounted to the greatest extent possible and will be interconnected using PVC piping and flexible suction hose. Pressure gauges and sample taps will be located throughout the system to monitor system

performance. Butterfly valves will be provided on the inlet and outlet of each of the major units to isolate them for maintenance.

The generators are manufactured by Multiquip or equivalent. Two generators were supplied, one operating and one as a backup system. The generators are 3 phase and supplies 480v. The generators may supply an output between 100kw-200kw, depending upon the power requirements.

Discharge from the treatment plant will be directed to a NYSDEC approved 60' 12" diameter flume as shown in the dewatering layout drawing located in the appendix. The discharge will be directed to the same existing outfall as utilized prior to the discovery of contamination.

Operating and Monitoring

The system will be operated and maintained by Maracap with technical assistance provided by Moretrench. Standby power and standby vacuum pump will be onsite and maintained in proper working order. The total discharge volume, average pump rate, and times of pump operation will be documented daily. The flow meters will be equipped with totalizers which measure the cumulative flow through a meter. Discharge monitoring requirements will be determined by NYSDEC as part of the STIP. Upon issuance of the STIP the Water Treatment Plan will be revised to include specific discharge monitoring requirements as per the NYSDEC.

Appendix A

Water Treatment System

- **Treatment System Layout**

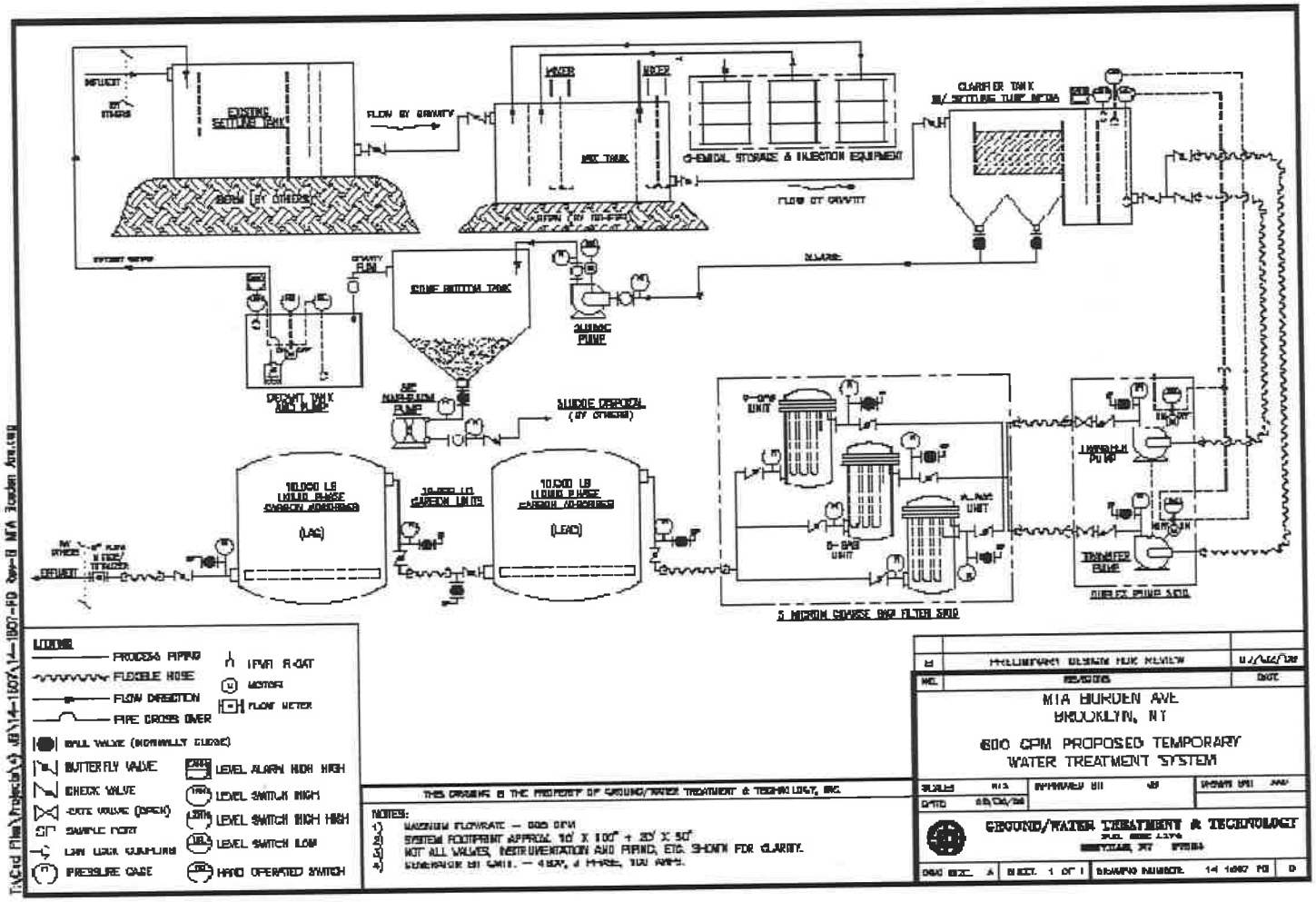

Borden Avenue Bridge
Queens, NY
7/23/09

Appendix B

Material & Equipment Specifications

T:\Cad Files\Rentals - STANDARD DRAWINGS\EQUIPMENT SPECIFICATIONS\TANKS\ST-0034-SPC Rev-C 50 Yard Roll-off Settling Tank.dwg, Layout

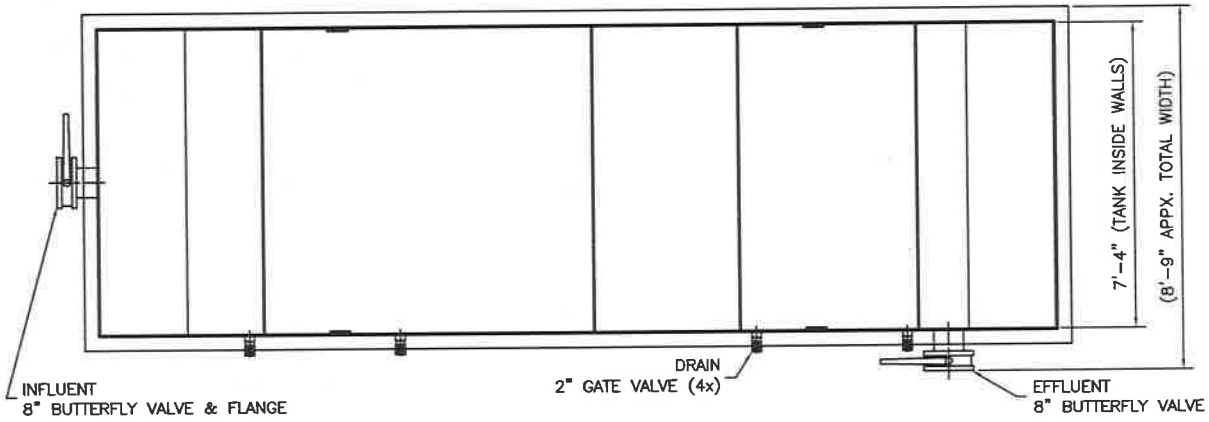

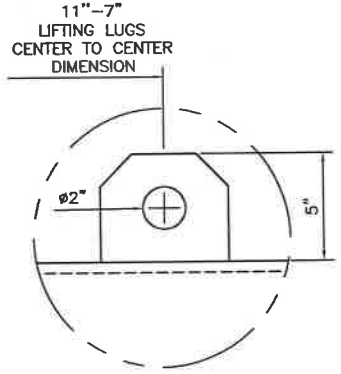

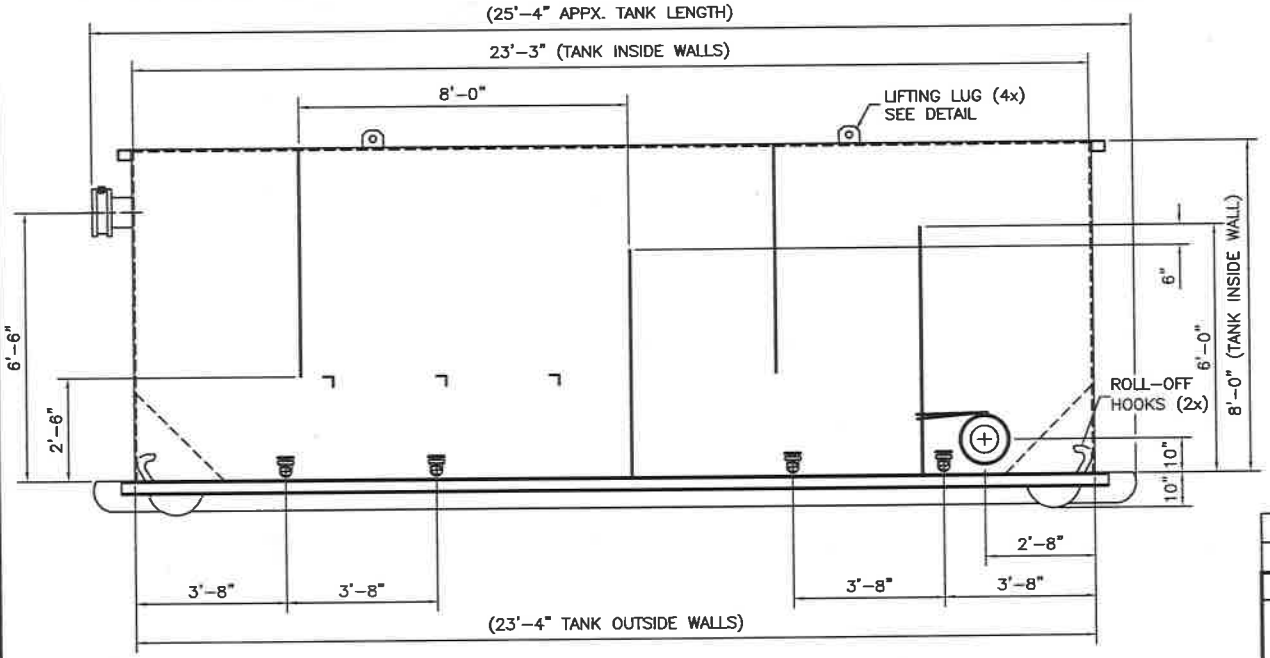

50 YARD ROLL-OFF SETTLING TANK

– TANK CONSTRUCTION:	A-36 CARBON STEEL
– INLET CONNECTION:	8" FLANGE
– OUTLET CONNECTION:	8" FLANGE
– DRAINS (4x):	2" NPT FEMALE COUPLING
– APPX. TANK WEIGHT (EMPTY):	10,000 Lbs.
– APPX. TANK WEIGHT (OPERATING):	75,000 Lbs.

	CAPACITY	
	VOLUME (GAL.)	DESIGN FLOW (GPM) @ 15 MIN. RETENTION
NOMINAL	10,000	666.7
OPERATING	7,500	500

NO.	REVISIONS	DATE
C	CHANGED VOLUMES AND ADDED RETENTION TIME	04/20/09

50 YARD ROLL-OFF SETTLING TANK STANDARD EQUIPMENT SPECIFICATION

SCALE: NTS	APPROVED BY: JB		DRAWN BY: AAV
DATE: 10/06/08			

GROUND/WATER TREATMENT & TECHNOLOGY
P.O. BOX 1174
DENVILLE, NJ 07834

THIS DRAWING IS THE PROPERTY OF
GROUND/WATER TREATMENT & TECHNOLOGY, INC

DWG SIZE: A	SHEET: 1 OF 1	DRAWING NUMBER: ST-0034-SPC	C

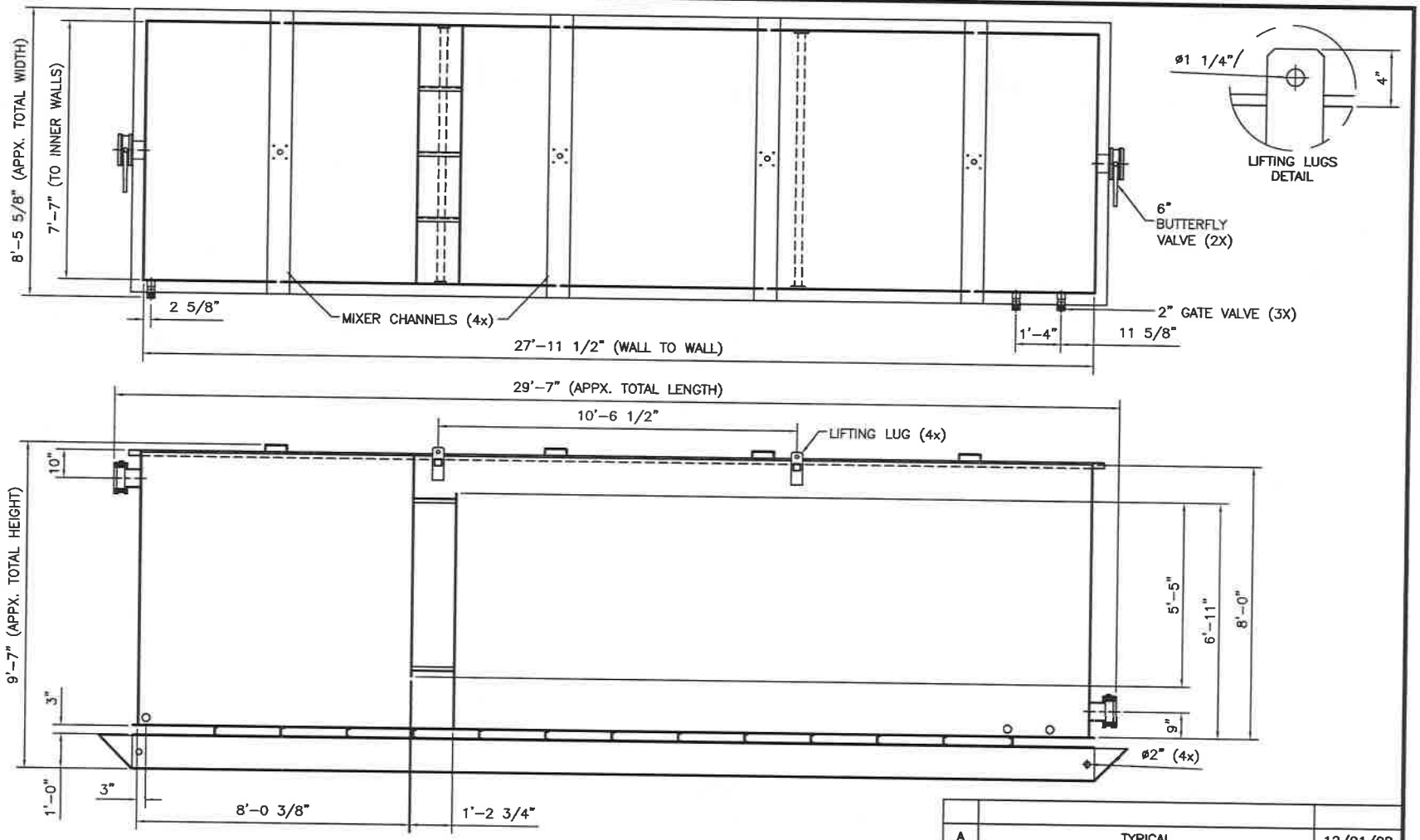

11,000 Gal. MIXING TANK SPECIFICATIONS

– GWTT EQUIPMENT NUMBER:	0342
– RIW NUMBER:	60231
– NOMINAL VOLUME:	11,000 GALLONS
– TANK CONSTRUCTION:	A-36 CARBON STEEL
– WATER INLET CONNECTION:	6" FLANGE
– WATER OUTLET CONNECTION:	6" FLANGE
– DRAINS (3x):	2" GATE VALVES
– APPX. TANK WEIGHT (EMPTY):	17,000 Lbs.
– APPX. TANK WEIGHT (OPERATING):	110,000 Lbs.

NO.	REVISIONS	DATE
A	TYPICAL	12/01/08

11,000 Gal. MIXING SETTLING TANK
GWTT# 0342
EQUIPMENT SPECIFICATION

SCALE: NTS	APPROVED BY: JB	DRAWN BY: AAV	
DATE: 12/01/08			

GROUND/WATER TREATMENT & TECHNOLOGY
P.O. BOX 1174
DENVILLE, NJ 07834

THIS DRAWING IS THE PROPERTY OF
GROUND/WATER TREATMENT & TECHNOLOGY, INC

DWG SIZE: B	SHEET: 1 OF 1	DRAWING NUMBER: EQ-0342-SPC	A

T:\Cad Files\Rentals - EQUIPMENT DRAWINGS\SPECIFICATION\TANKS\EQ-0342-SPC Rev-A 11k Gal Mixing Settling Tank.dwg

EQUIPMENT SPECIFICATIONS

DRAWING NO.: #05AFG0319-4
TAG NUMBERS: RAPID MIXER

DRIVE:

MODEL & SIZE:	POG-2-PTO
RATIO:	5.0:1
SERVICE FACTOR:	1.5 @ 100,000 HOURS
OUTPUT SPEED:	350 RPM
MOUNTING:	BASEMOUNT
GEAR REDUCTION:	SINGLE

SHAFT:

MATERIAL:	316 S.S.
SIZE (DIA.):	1.25"
RIGID COUPLING:	N/A

IMPELLERS:

MATERIAL:	316 S.S.
IMPELLER:	ONE: PROPELLER (CAST/SETSCREW)
DIAMETER:	14.0"

MOTOR:

MANUFACTURER:	RELIANCE
HP:	2
FRAME SIZE:	56C
ENCLOSURE:	TEFC
MOUNTING:	C-FLANGE
SERVICE FACTOR:	1.35
SYNCHRONOUS SPEED:	1800
SERVICE (PH/HZ/V):	3/60/230/460

STANDARD EFFICIENCY, STANDARD DUTY

R2-20090903-575

NEW YORK STATE
DEPARTMENT OF ENVIRONMENTAL CONSERVATION

STIPULATION PURSUANT TO SECTION 17-0303 OF THE ENVIRONMENTAL CONSERVATION LAW AND SECTION 176 OF THE NAVIGATION LAW BY:

NYSDEC Spill No. 0903437

New York City Department of Transportation,

Respondent.

1. The New York State Department of Environmental Conservation is responsible for the cleanup and removal of discharges of petroleum pursuant to Article 12 of the Navigation Law and Article 17 of the Environmental Conservation Law.

2. The Respondent has agreed to clean up and remove a discharge of petroleum which was discovered on or about June 23, 2009 within the excavation limits of the cofferdam at the Borden Avenue Bridge, Long Island City, New York (the "Site") by taking the steps and according to the conditions set forth in the Corrective Action Plan below.

3. This Stipulation does not affect the Department's right to pursue any claims that the Department may have against the Respondent, including but not limited to claims for violation of the Navigation Law and/or the Environmental Conservation Law. This Stipulation does not affect any defenses that the Respondent may have to any such claims.

4. The Respondent, without admitting liability, consents to the issuance of this Stipulation, waives the right to notice and hearing with respect to the issuance and entry of this Stipulation as provided by law, and agrees to be bound by the terms of this Stipulation, including any attachments hereto.

5. This Stipulation is equivalent to an order pursuant to ECL § 17-0303 and a directive pursuant to NL § 176 and is enforceable as such.

6. The Corrective Action Plan may be modified in writing as may be agreed between the parties. The Corrective Action Plan may be modified by the Department in the same manner as a Department permit. In the event of a conflict between the terms of this Stipulation and any Corrective Action Plan submitted pursuant to this Stipulation, the terms of this Stipulation shall control over the terms of the Corrective Action Plan.

7. The effective date of this Stipulation is the date it is signed by the Department.

This Stipulation shall terminate when the Department issues a written determination that no further remedial activities are required with respect to the petroleum discharge at the Site (the "Termination Date").

8. The Respondent and its employees, servants, agents, lessees, sublessees, successors, and assigns hereby waive any right to pursue reimbursement of monies expended by the Respondent prior to the Termination Date as against the State of New York or the New York Environmental Protection and Spill Compensation Fund (the "Spill Fund"), and agree to indemnify and hold harmless the Spill Fund from any and all legal or equitable claims, suits, causes of action, or demands whatsoever with respect to the Site that any of same has or may have as a result of the Respondent's entering into or fulfilling the terms of this Stipulation with respect to the Site.

NEW YORK CITY DEPARTMENT
OF TRANSPORTATION

9/3/09
Date

BY: _____

Henry Perahia, Deputy Comm.
Print name and title

September 15, 2009
Date

_____
Regional Director, NYSDEC Region 2

CORRECTIVE ACTION PLAN
SPILL NUMBER: 0903437

1. The Respondent shall implement the Remedial Action Work Plan as amended August 19, 2009 (the "RAWP"), approved by Department staff on August 31, 2009, within the implementation schedule set forth in the RAWP.

2. All approved submittals shall be an enforceable part of this Stipulation. If a submittal is disapproved, the Department shall specify any deficiencies and required modifications in writing. Within 15 days of receipt of the Department's disapproval notice, the Respondent shall submit a revised submittal which addresses the Department's comments, correcting all deficiencies identified in the disapproval notice.

3. All applicable permits for construction activities that will take place within the limits of waters and wetlands under the jurisdiction of the New York State Department of Environmental Conservation must be in place prior to the start of said work.

4. All water which has been collected as part of the construction activities, and which will be discharged to the Dutch Kills, must not exceed the allowable contaminant limits as set forth in Table 2 – Wastewater Limits for Surface Water Discharges (see attached).

5. Any modifications to this Corrective Action Plan must be approved in advance in writing by the Department. The Department reserves the right to require additional investigation and/or remedial action due to environmental conditions related to the subject spill which were unknown to the Department.

TABLE 2
Wastewater Limits For Surface Water Discharges

COMPOUND	GASOLINE	FUEL OIL
pH range	6.5 - 8.5	6.5 - 8.5
Benzene[1]	7 ug/l	7 ug/l
Ethylbenzene	5 ug/l	5 ug/l
Toluene	5 ug/l	5 ug/l
o-Xylene	5 ug/l	5 ug/l
m-Xylene	5 ug/l	5 ug/l
p-Xylene	5 ug/l	5 ug/l
Mixed xylenes	5 ug/l	5 ug/l
Naphthalene	10 ug/l	10 ug/l
MTBE	10 ug/l	10 ug/l

N A = not applicable

[1] The benzene limits for discharge to Class A surface waters are applicable for water bodies capable of 7:1 dilution ratio of base flow to discharge flow. The Division of Water may be consulted for assistance as needed.

MORETRENCH
....since 1931

SUBMITTAL

MORETRENCH
...since 1931

Borden Avenue Bridge

26 Borden Avenue
Queens, NY

WATER TREATMENT PLAN

July 23, 2009

Presented to:

Maracap Construction Industries Inc.
11018 15th Avenue
College Point, NY 11356

MORETRENCH
....since 1931

Borden Avenue Bridge

26 Borden Avenue
Queens, NY

WATER TREATMENT PLAN

Submitted to: Maracap Construction Industries Inc.

Prepared by

Moretrench American Corporation
51 Smart Avenue, Yonkers NY 10704

The submitted plan is based upon sound engineering principles and accepted industry practices and is reasonable for the described application. Responsibility for the design and installation of all structural elements contained herein, including but not limited to sheeting, underpinning, wood lagging, soldier beams and pilings is by others. Proper operation and supervision of the attached plan and construction of same are the responsibility of others as specified here-in.

MORETRENCH
....since 1931

Table of Contents

System Overview	4
Water Treatment System	5
Operating and Monitoring	8

Appendices

Appendix A	Treatment System Layout
Appendix B	Material & Equipment Specifications
Appendix C	System overview

July 23, 2009

MORETRENCH AMERICAN CORPORATION
51 Smart Avenue – Yonkers, NY 10704
(914) 423-1331

System Overview

As a result of the petroleum-impacted sediment encountered during emergency bridge repair work at Borden Avenue Bridge in Queens, NY, Moretrench, under subcontract to Maracap, amended its Dewatering Plan dated July 20, 2009 to include a Water Treatment System described herein. The amended plan addresses the treatment of impacted water from within the cofferdam and run off from the wet sediment stockpiles. The groundwater table will be lowered and withdrawn from the cofferdam through a series of permitted wells from within the confines of the cofferdam and treated on site through a designed water treatment system prior to discharge to the Dutch Kills. A SPDES Permit Equivalent Application is attached to the Corrective Action Plan (CAP) submitted by STV Incorporated on behalf of the New York City Department of Transportation. Please see the Corrective Action Plan for additional details on the project.

The existing sidewalk is approximately at El+19'. The water table is tidal and varies from El+0' to El-4'. All elevations are referenced to the Borough President of Manhattan Datum, which is 2.75' above Mean Sea Level at Sandy Hook, NJ.

Areas that will require dewatering are as follows:

- The bottom of existing abutment to be removed along west side of the embankment which extends to approximately El-18' with a length of approximately 70'.
- The bottom of existing wing walls to be removed on both ends extending to El-4'.
- Installation of new wing walls and abutment to El-18'.

The general subsurface profile consisted of layers of silty sand fill, organic clays silts, varved clay and silty, sandy till, decomposed rock and bedrock. Although the existing stratigraphy varies across the site, it can be summarized as follows:

- The top layer generally consisting of dense clayey silty fine to coarse sand with trace to some gravel, bricks, wood and coal which extends to approximately El-21'.
- The top layer is underlain by soft to very soft organic clayey silt with some sand which extends to approximately El-30'.
- Beneath the organic clayey silt there are alternating varves of grey and light brown stiff silty glacial clay. These varves extend to approximately El-38'.
- Bedrock is at approximately El-70' with approximately 25' of decomposed rock above it.

Water Treatment System

The proposed temporary water treatment system can treat a maximum of 600 gpm of water generated from dewatering activities. The water treatment system has been designed to remove elevated levels of Total Suspended Solids (TSS), Volatile Organic Compounds (VOCs) and Oil & Grease. We have assumed that any metals present in the raw water are associated with the Total Suspended Solids (TSS) and can be removed by coagulation/flocculation/clarification/bag filtration. The temporary treatment system will consist of the following major components:

- One (1) influent settling tank
- One (1) chemical mix tank
- One (1) chemical injection and storage unit
- One (1) bulk settling clarifier
- One (1) sludge pump
- One (1) cone bottom tank
- One (1) duplex centrifugal transfer pump skid
- Three (3) 6-bag filter housings, parallel operation
- Two (2) liquid phase granular activated carbon adsorbers, series operation
- One (1) effluent flow meter

Water from the dewatering system will be directed to the influent settling tank. The settling tank will be elevated (on a man made berm or on cribbing provided by others) to allow the water to flow by gravity to the chemical mix tank. The influent settling tank is constructed of steel and has a total of four (4) over/under weirs to facilitate the settling of solids. The influent settling tank has a nominal volume of 10,000 gallons. At the design water flow rate of 600 gpm, the influent settling tank will provide approximately 17 minutes of detention time. The influent settling tank is constructed with an open top for ease of cleaning.

Water will flow by gravity from the influent settling tank to the chemical mix tank. The chemical mix tank is constructed of steel and has a nominal volume of 10,000 gallons. At the design water flow rate of 600 gpm, the chemical mix tank will provide approximately 17 minutes of detention time. The mix tank is constructed with an open top for ease of cleaning.

A coagulant and flocculent will be injected to facilitate the settling of solids in the raw water stream. A coagulant (such as ADEGA WC-500) is used to change the electrical charge of the fine particles and to cause a destabilization of the particles. The coagulant will be injected directly into a coagulation chamber in the chemical mix tank via a chemical metering pump. Flocculent (such as ADEGA AP-220) is used to bring the charged particles together and to make them heavier which will allow for better settling in the bulk settling clarifier. The flocculent will be provided as a dry powder and will need to be mixed with clean water on-site in order to make the proper liquid solution. The

flocculent solution will then be injected into the flocculation chamber in the chemical mix tank via a chemical metering pump. Two (2) slow electric mixers equipped with VFD controllers in the chemical mix tank ensure that the flocculent is distributed throughout the water and help to agglomerate the particles further. The amount of coagulant/flocculent injected will be determined by an influent flow meter installed in the influent line.

The chemical mix tank will be elevated (on a man made berm or on cribbing provided by others) to allow the water to flow by gravity from the chemical mix tank to the bulk settling clarifier, thus preventing shearing of the agglomerated particles resulting from the addition of the coagulant and flocculent. The bulk settling clarifier is equipped with a number of features that will facilitate both the settling of solids and routine maintenance of the unit. Water to the bulk settling clarifier is directed to an influent chamber. A weir plate extending from the top of the unit forces the water underneath a removable steel basket containing settling tube media. Treated water flows upward through the settling tubes while solids collect and fall to the bottom of the bulk settling clarifier. Tube settlers capture the settleable fine floc that escapes the clarification zone beneath the tube settlers and allows the larger floc to travel to the tank bottom in a more settleable form. The tube settler's channel collects solids into a compact mass which promotes the solids to slide down the tube channel.

Solids and/or sludge that have settled to the bottom of the clarifier will need to be periodically removed to prevent accumulated material from clogging the tube settlers thus reducing the efficiency of the unit. The base of the bulk settling clarifier contains a series of valved clean out ports. Solids/sludge can be pumped from these ports to a sludge holding tank through the use of an electric diaphragm sludge pump. Water decanted from the sludge holding tank can be introduced back to the head of the plant while the remaining solids will need to be periodically disposed of in accordance with all local, state and federal regulations. The waste products from cleaning the clarifier cannot be pumped back to the head of the treatment system. The waste products from cleaning the clarifier will be disposed of in accordance with all local, State and federal regulations.

Clarified water rises above the settling tube media and flows over a final weir plate into the duplex centrifugal pump skid which pumps water through the bag filter skid, and carbon adsorbers. The duplex pump skid will contain an integral control system and two (2) full capacity centrifugal pumps each capable of producing 600 gpm @ approximately 70' TDH (30 psi). The pumps will each be equipped with 25 Hp, 460V, 3 phase, 60 Hz electric motors. The control system will consist of two (2) pump motor starters and four (4) float controls – Pump 1 on, Pump 2 on, Pump 1 & 2 off, and a high level alarm which will activate an alarm light.

The bag filter skid will consist of three (3) multi-bag filter housings, each rated for a maximum flow of 600 gpm, plumbed in parallel. The inlet and outlet of the bag filter skid will be equipped with manifolds complete with isolation valves. Each of the filter

housings will contain six (6) bag filters designed to remove any remaining sediment prior to the resin units. It is anticipated that 5-micron filter bags will be utilized for this project. The inlet and outlet of each of the bag filter housings will be equipped with pressure gauges to monitor the differential pressure across each filter housing. The bag filters should be changed once the differential pressure across the housing reaches 15 to 20 psi. The bag filter housings will be plumbed in parallel such that the bags in one (1) filter housing can be changed while the remaining two (2) filter housings continue to process water at the design water flow rate of up to 600 gpm. Used filters will be disposed of in accordance with all local, state and federal regulations.

If the bag filters are not properly operated and maintained, the differential pressure across the filter housings can rise to the point that the transfer pumps cannot pump water from the bulk settling clarifier faster than water is introduced into the bulk settling clarifier. The water level in the bulk settling clarifier will rise and eventually activate the high level alarm light. If the bag filters are not changed, the water level in the bulk settling clarifier will continue to rise and will eventually overflow.

The carbon adsorbers will each contain 10,000 lbs. of reactivated, granular liquid phase carbon media designed to remove low levels of SVOCs and VOCs such as BTEX (Benzene, Toluene, Ethyl Benzene, and Xylene) prior to discharge. Flexible hose will be provided to configure the carbon adsorbers in series operation. If breakthrough of SVOCs or VOCs occurs on the lead carbon adsorber, the water will temporarily be directed to the lag adsorber. The spent carbon will be removed from the lead adsorber and will be replaced with 10,000 lbs of reactivated carbon media. The spent carbon will be sampled to determine RCRA waste characteristics and will be disposed/reactivated accordingly.
The inlet and outlet of each carbon adsorber will be equipped with a pressure gauge to monitor the differential pressure across the carbon media. The differential pressure across each carbon adsorber should be recorded in a log book on a daily basis. If the differential pressure across a particular carbon adsorber rises to the point that water flow is restricted (as measured by the effluent flow meter), that carbon adsorber should be taken off line temporarily to backwash the media. The inlet and outlet of each carbon adsorber is equipped with fittings and valves to facilitate backwashing. Backwash water should be obtained from a clean water source such as a hydrant or a water truck. The waste water from the backwash process can be directed to the influent settling tank and will be processed through the treatment system.

A 6" diameter mechanical flow meter with a totalizer will be provided at the end of the treatment system to indicate the flow rate and to record the total gallons of water treated. The flow meter has an acceptable flow range of 90 to 1,200 gpm. Flow readings should be recorded daily in a log book.

The individual components of the system will be skid mounted to the greatest extent possible and will be interconnected using PVC piping and flexible suction hose. Pressure gauges and sample taps will be located throughout the system to monitor system

performance. Butterfly valves will be provided on the inlet and outlet of each of the major units to isolate them for maintenance.

The generators are manufactured by Multiquip or equivalent. Two generators were supplied, one operating and one as a backup system. The generators are 3 phase and supplies 480v. The generators may supply an output between 100kw-200kw, depending upon the power requirements.

Discharge from the treatment plant will be directed to a NYSDEC approved 60' 12" diameter flume as shown in the dewatering layout drawing located in the appendix. The discharge will be directed to the same existing outfall as utilized prior to the discovery of contamination.

Operating and Monitoring

The system will be operated and maintained by Maracap with technical assistance provided by Moretrench. Standby power and standby vacuum pump will be onsite and maintained in proper working order. The total discharge volume, average pump rate, and times of pump operation will be documented daily. The flow meters will be equipped with totalizers which measure the cumulative flow through a meter. Discharge monitoring requirements will be determined by NYSDEC as part of the STIP. Upon issuance of the STIP the Water Treatment Plan will be revised to include specific discharge monitoring requirements as per the NYSDEC.

Appendix A

Water Treatment System

- **Treatment System Layout**

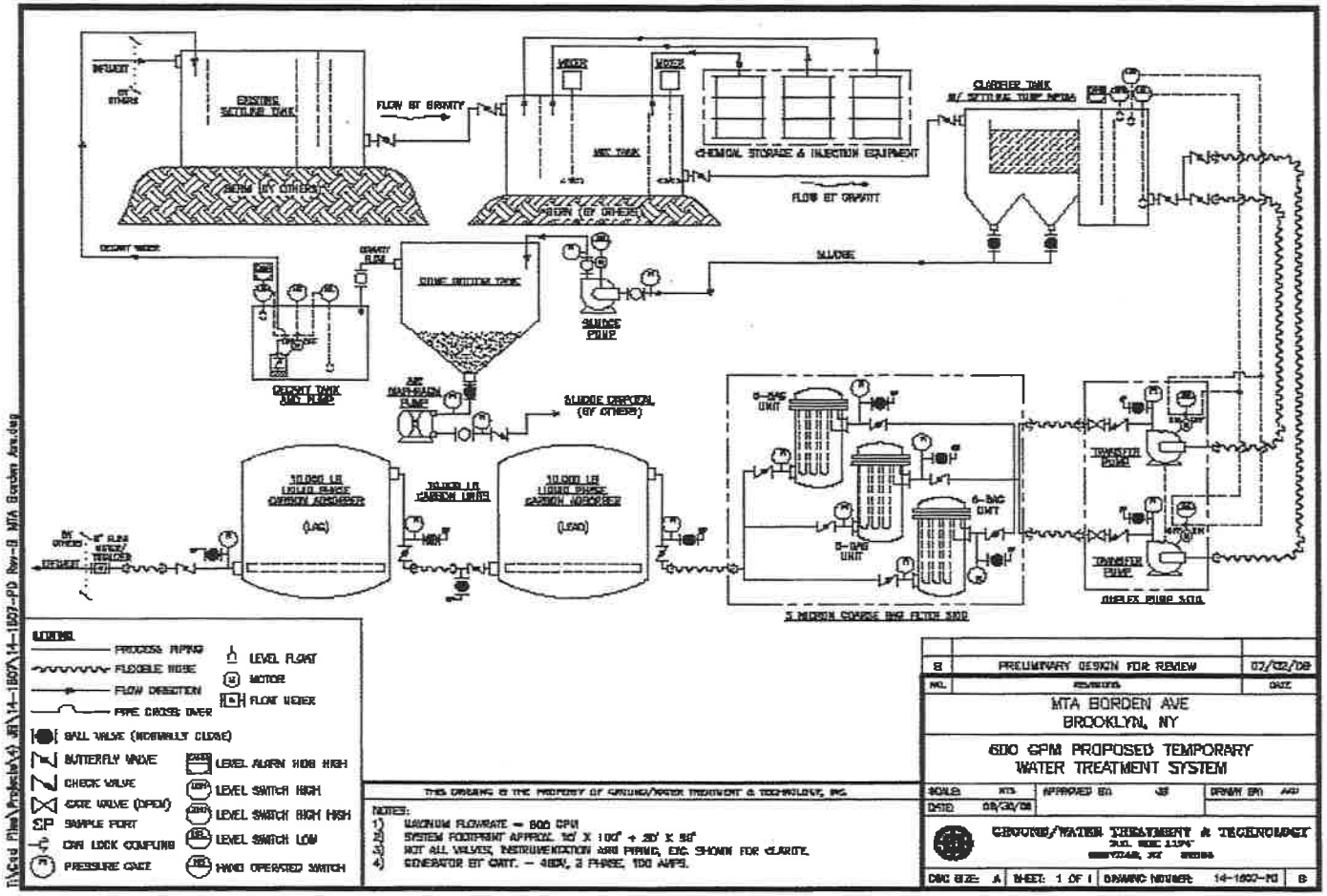

Borden Avenue Bridge
Queens, NY
7/23/09

Appendix B

Material & Equipment Specifications

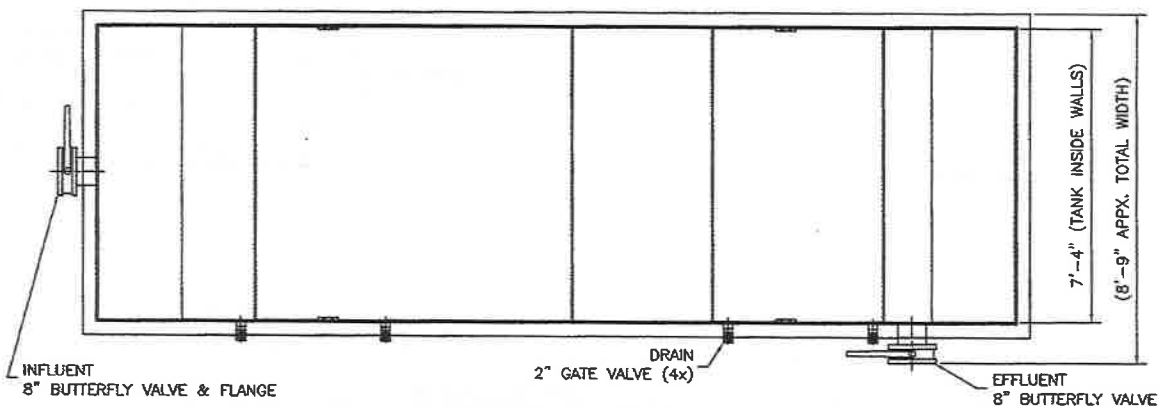

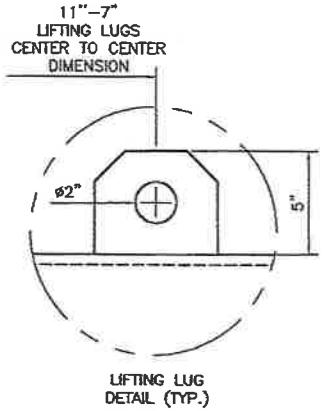

LIFTING LUG
DETAIL (TYP.)

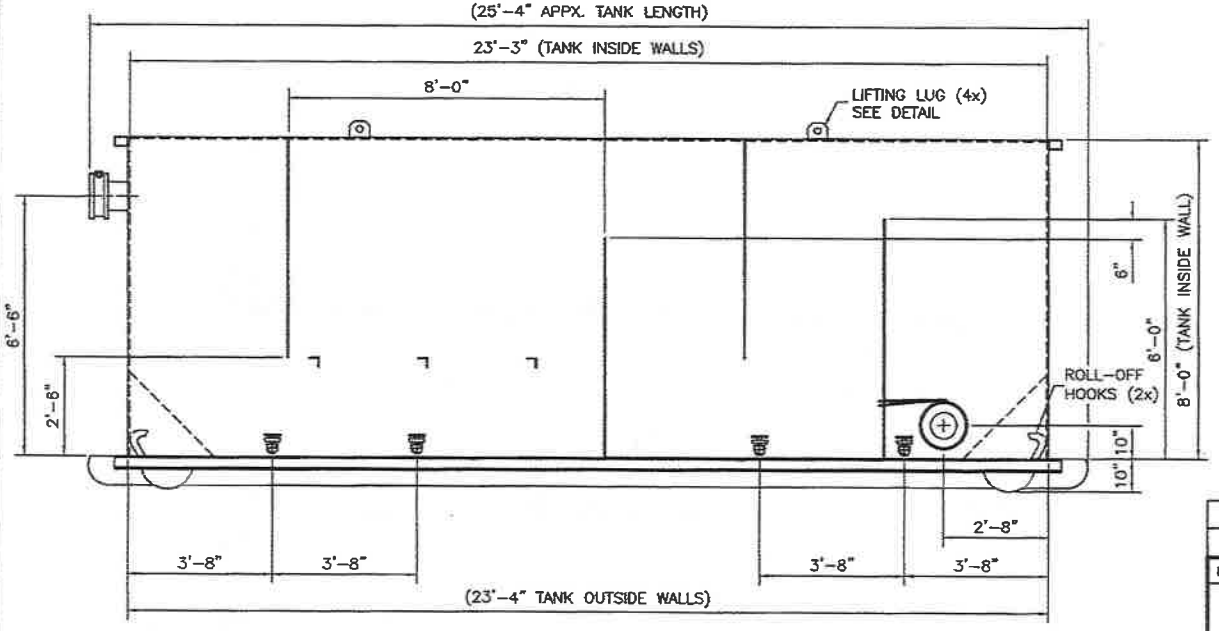

50 YARD ROLL-OFF SETTLING TANK

- TANK CONSTRUCTION:	A-36 CARBON STEEL
- INLET CONNECTION:	8" FLANGE
- OUTLET CONNECTION:	8" FLANGE
- DRAINS (4x):	2" NPT FEMALE COUPLING
- APPX. TANK WEIGHT (EMPTY):	10,000 Lbs.
- APPX. TANK WEIGHT (OPERATING):	75,000 Lbs.

	CAPACITY	
	VOLUME (GAL.)	DESIGN FLOW (GPM) @ 15 MIN. RETENTION
NOMINAL	10,000	666.7
OPERATING	7,500	500

NO.	REVISIONS	DATE
C	CHANGED VOLUMES AND ADDED RETENTION TIME	04/20/09

50 YARD ROLL-OFF SETTLING TANK STANDARD EQUIPMENT SPECIFICATION

SCALE: NTS	APPROVED BY: JB	DRAWN BY: AAV	
DATE: 10/06/08			

GROUND/WATER TREATMENT & TECHNOLOGY
P.O. BOX 1174
DENVILLE, NJ 07834

THIS DRAWING IS THE PROPERTY OF
GROUND/WATER TREATMENT & TECHNOLOGY, INC

DWG SIZE: A	SHEET: 1 OF 1	DRAWING NUMBER: ST-0034-SPC	C

T:\Cad Files\Rentals - STANDARD DRAWINGS\EQUIPMENT SPECIFICATION\TANKS\ST-0034-SPC Rev-C 50 Yard Roll-off Settling Tank.dwg, Letter

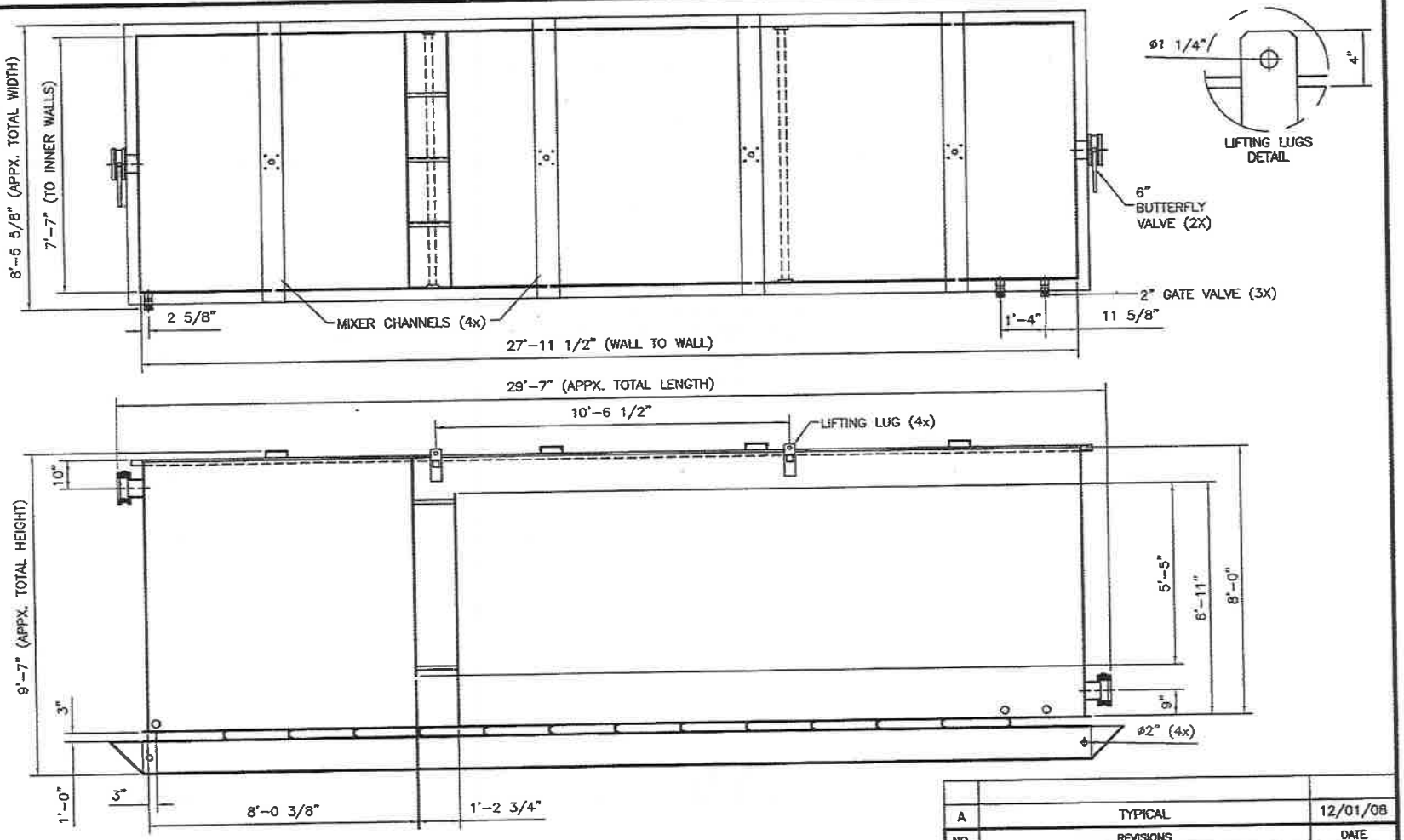

11,000 Gal. MIXING TANK SPECIFICATIONS

– GWTT EQUIPMENT NUMBER:	0342
– RIW NUMBER:	60231
– NOMINAL VOLUME:	11,000 GALLONS
– TANK CONSTRUCTION:	A-36 CARBON STEEL
– WATER INLET CONNECTION:	6" FLANGE
– WATER OUTLET CONNECTION:	6" FLANGE
– DRAINS (3x):	2" GATE VALVES
– APPX. TANK WEIGHT (EMPTY):	17,000 Lbs.
– APPX. TANK WEIGHT (OPERATING):	110,000 Lbs.

NO.	REVISIONS	DATE
A	TYPICAL	12/01/08

11,000 Gal. MIXING SETTLING TANK
GWTT# 0342
EQUIPMENT SPECIFICATION

SCALE: NTS	APPROVED BY: JB		DRAWN BY: AAV
DATE: 12/01/08			

GROUND/WATER TREATMENT & TECHNOLOGY
P.O. BOX 1174
DENVILLE, NJ 07834

THIS DRAWING IS THE PROPERTY OF
GROUND/WATER TREATMENT & TECHNOLOGY, INC

DWG SIZE: B	SHEET: 1 OF 1	DRAWING NUMBER: EQ-0342-SPC	A

T:\Cad Files\Rentals - EQUIPMENT DRAWINGS\SPECIFICATION\TANKS\EQ-0342-SPC Rev-A 11k Gal.Mixing Settling Tank.dwg

EQUIPMENT SPECIFICATIONS

DRAWING NO.: #05AFG0319-4
TAG NUMBERS: RAPID MIXER

DRIVE:

MODEL & SIZE:	POG-2-PTO
RATIO:	5.0:1
SERVICE FACTOR:	1.5 @ 100,000 HOURS
OUTPUT SPEED:	350 RPM
MOUNTING:	BASEMOUNT
GEAR REDUCTION:	SINGLE

SHAFT:

MATERIAL:	316 S.S.
SIZE (DIA.):	1.25"
RIGID COUPLING:	N/A

IMPELLERS:

MATERIAL:	316 S.S.
IMPELLER:	ONE: PROPELLER (CAST/SETSCREW)
DIAMETER:	14.0"

MOTOR:

MANUFACTURER:	RELIANCE
HP:	2
FRAME SIZE:	56C
ENCLOSURE:	TEFC
MOUNTING:	C-FLANGE
SERVICE FACTOR:	1.35
SYNCHRONOUS SPEED:	1800
SERVICE (PH/HZ/V):	3/60/230/460

STANDARD EFFICIENCY, STANDARD DUTY

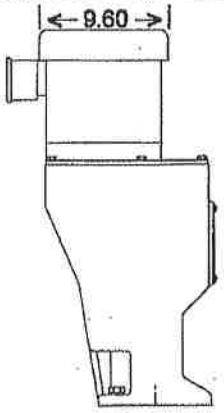

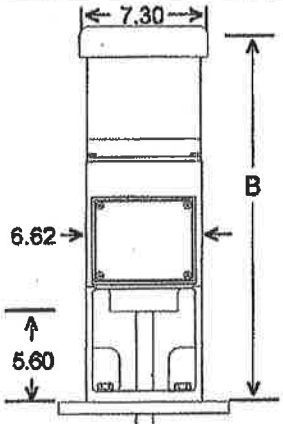

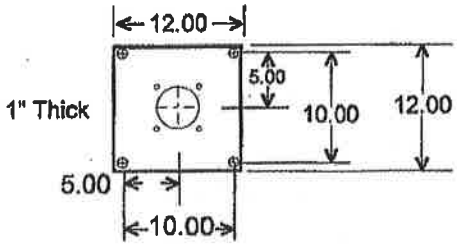

Baseplate Option

MODEL POG OPEN TANK

Model	HP	Motor RPM	Prop RPM	B	Approx. Wt. (in lbs.)
POG-14	1/4	1750	350	22.9	125
POG-13	1/3	1750	350	22.9	128
POG-12	1/2	1750	350	22.9	130
POG-34	3/4	1750	350	25.1	132
POG-11	1	1750	350	25.1	132
POG-15	1 1/2	1750	350	25.1	142
POG-2	2	1750	350	27.8	154

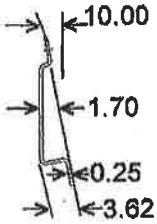

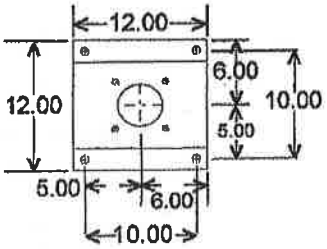

Angle Riser Option

MODEL DESIGNATIONS:

POG – Fixed Mount, Gear Drive, Open Tank
PSG – Seal, Fixed Mount, Gear Drive, Closed Tank
PMG – Mechanical Seal, Fixed mount, Gear Drive, Closed Tank

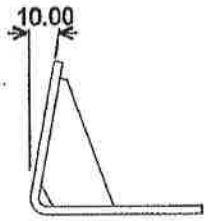

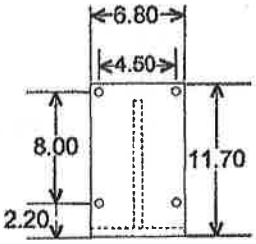

Wall Mount Option

Copyright ©2005 Philadelphia Mixing Solutions

Series JG

Gear Drive Mixer, Clamp or Cup Plate Mount
Heavy Helical Gear, 350 rpm, Grease Lube

Neptune's most powerful mixers for the most difficult mixing applications. Grease filled gearbox eliminates oil seal and the possibility of oil contamination of process.

Features

- No clutches to slip, wear or replace.
- 316SS propellers and shafts are standard. Optional coatings such as rubber, PVC or Teflon® also available.
- Square pitch 1.0 ratio marine propellers are used exclusively. Flow coefficients and power consumption characteristics equal those of the best hydrofoil impeller designs.
- Vibration-absorbing pad standard.
- Motors are available in TEFC or explosion-proof enclosures (1750 rpm, 56C frame). Air motors also available.
- Gears run in grease lubrication. Cannot leak oil.
- All JG mixer shaft bearings are permanently lubricated.
- Variable speed drives also available.
- Cast aluminum housing.
- Mounting clamp has adjustable angle of entry by indexed ball-and-socket design to achieve various process results.
- Fixed cup plate mount optional on 1/3 HP through 1½ HP. Standard on 2 HP and larger models.

Model Number	Standard Motor Description	A Shaft Length	B	C		D Shaft Diameter
				Single	Dual	
Totally-enclosed fan-cooled (TEFC)						
JG-2.0	1/3 HP-1-115/230	48"	17½"	10"	8"	¾"
JG-2.1	1/3 HP-3-230/460	48"	17⅜"	10"	8"	¾"
JG-3.0	1/2 HP-1-115/230	48"	18½"	12"	10"	¾"
JG-3.1	1/2 HP-3-230/460	48"	17⅜"	12"	10"	¾"
JG-4.0	3/4 HP-1-115/230	60"	18½"	13"	11"	¾"
JG-4.1	3/4 HP-3-230/460	60"	18½"	13"	11"	¾"
JG-5.1	1 HP-3-230/460	60"	18⅜"	14"	12"	1"
JG-6.1	1½ HP-3-230/460	60"	18¾"	15"	13"	1"
JG-7.1	2 HP-3-230/460	60"	20⅝"	16"	14"	1¼"
JG-8.1	3 HP-3-230/460	72"	21⅝"	16"	15"	1¼"
Explosion-proof class 1 group D (EP)						
JG-2.2	1/3 HP-1-115/230	48"	20½"	10"	8"	¾"
JG-2.3	1/3 HP-3-230/460	48"	17⅜"	10"	8"	¾"
JG-3.2	1/2 HP-1-115/230	48"	21"	12"	10"	¾"
JG-3.3	1/2 HP-3-230/460	48"	19⅝"	12"	10"	¾"
JG-4.2	3/4 HP-1-115/230	60"	21½"	13"	11"	¾"
JG-4.3	3/4 HP-3-230/460	60"	19⅝"	13"	11"	¾"
JG-5.3	1 HP-3-230/460	60"	20½"	14"	12"	1"
JG-6.3	1½ HP-3-230/460	60"	20½"	15"	13"	1"
JG-7.3	2 HP-3-230/460	60"	22½"	16"	14"	1¼"
Air motor						
JG-3.4	1/3 HP to 1/2 HP AIR Air Requirements: 12-20CFM at 40-80PSI	48"	17¼"	12"	10"	¾"
JG-4.4	3/4 HP AIR Air Requirements: 30CFM at 60PSI	60"	18"	13"	11"	¾"
JG-5.4	1 HP AIR Air Requirements: 40CFM at 40PSI	60"	19¼"	14"	12"	1"
JG-6.4	1½ HP AIR Air Requirements: 55CFM at 60PSI	60"	19¼"	15"	13"	1"
JG-7.4	2 HP AIR Air Requirements: 65CFM at 70PSI	60"	15¾"	16"	14"	1¼"
JG-8.4	4 HP AIR Air Requirements: 125CFM at 90PSI	72"	16¾"	16"	15"	1¼"

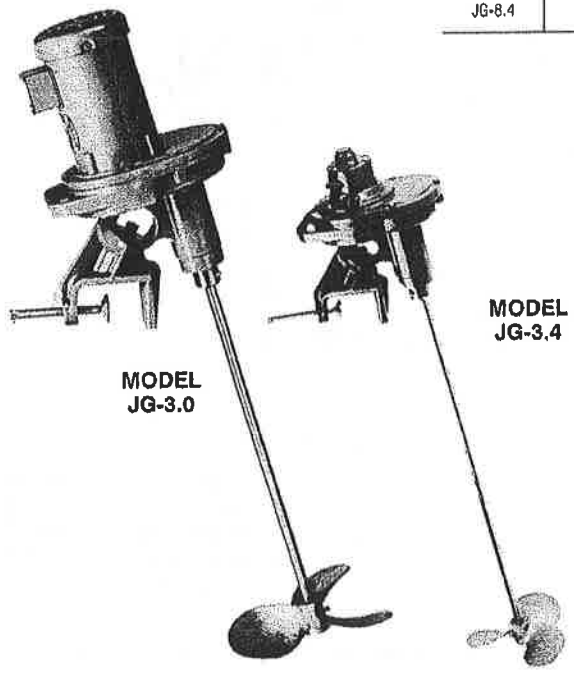

MODEL JG-3.0

MODEL JG-3.4

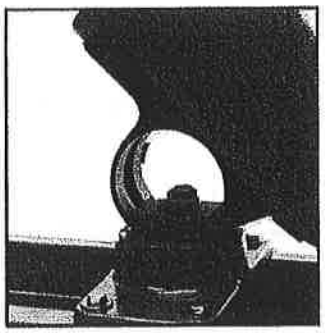

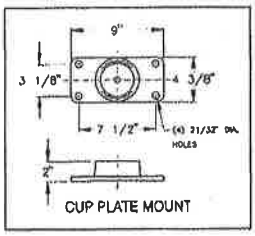

CUP PLATE MOUNT

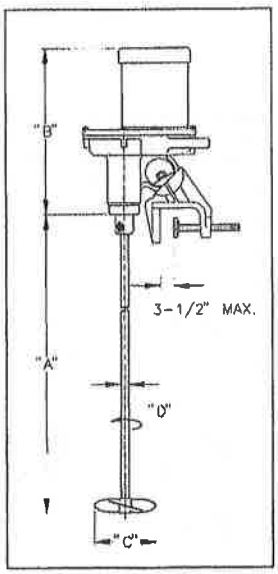

B731-468SI

Data Sheet

Series B

Electronic Metering Pumps

Configuration

Model B92 | 1 | - 392SI

Control & Output Code

Manual Control
Speed (stroking frequency) and stroke length manually adjustable

B11 --- 1.6 GPH	(6.1 l/h)	--- 150 psi	(10.30 Bar)
B12 --- 2.5 GPH	(9.5 l/h)	--- 100 psi	(6.90 Bar)
B13 --- 4.5 GPH	(17.0 l/h)	--- 50 psi	(3.50 Bar)
B14 --- 7.0 GPH	(26.5 l/h)	--- 30 psi	(2.07 Bar)

Instrument Responsive / Manual Control
Manual adjustment features of Series B1 plus switch conversion to external control for automatic systems.

B71 --- 1.6 GPH	(6.1 l/h)	--- 150 psi	(10.30 Bar)
B72 --- 2.5 GPH	(9.5 l/h)	--- 100 psi	(6.90 Bar)
B73 --- 4.5 GPH	(17.0 l/h)	--- 50 psi	(3.50 Bar)
B74 --- 7.0 GPH	(26.5 l/h)	--- 30 psi	(2.07 Bar)
B91 --- 1.6 GPH	(6.1 l/h)	--- 150 psi	(10.30 Bar)
B92 --- 2.5 GPH	(9.5 l/h)	--- 100 psi	(6.90 Bar)
B93 --- 4.5 GPH	(17.0 l/h)	--- 50 psi	(3.50 Bar)
B94 --- 7.0 GPH	(26.5 l/h)	--- 30 psi	(2.07 Bar)

Voltage Code

1	120 VAC, US Plug
2	240 VAC, US Plug
3	220-240 VAC, DIN Plug
5	240-250 VAC, UK Plug
6	240-250 VAC, AUST/NZ Plug
7	220-240 VAC, SWISS Plug

Liquid End

See next page for complete Liquid End specifications and selection.

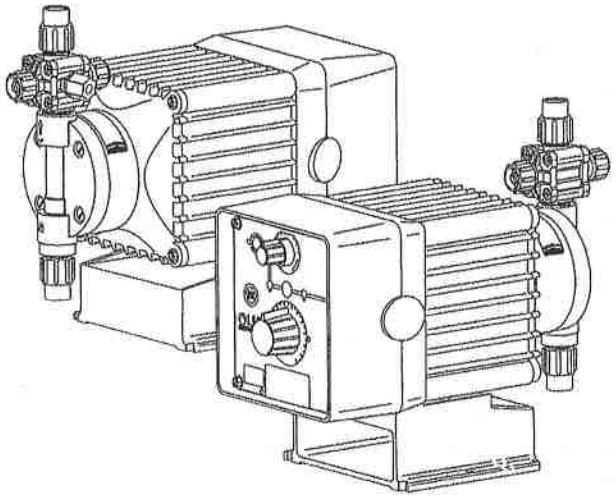

Specifications

Series	Strokes Per Minute (Adjustable) Min	Max	Stroke Length (Adjustable) Recommended Minimum	Average Input Power @ Max Speed	Shipping Weight
B11, B71, B91† B12, B72, B92† B13, B73, B93† B14, B74, B94†	1	100	10%	29 watts	15 lbs (6.9 kg)

† Series B9 pumps may be programmed for strokes per hour for lower outputs.

Dimensions

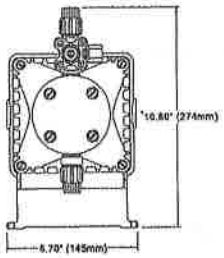

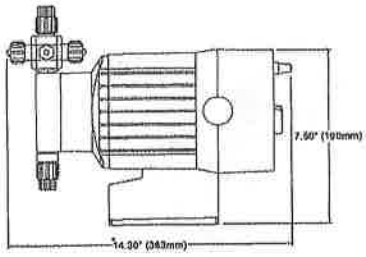

*DIMENSIONS SHOWN ARE MAXIMUM FOR LARGEST LIQUID END AVAILABLE. THESE DIMENSIONS VARY DEPENDING ON THE LIQUID END SELECTED.

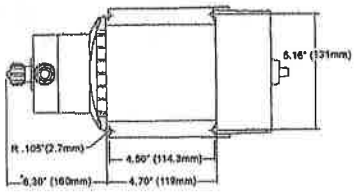

LMI MILTON ROY

8 Post Office Square
Acton, MA 01720 USA
TOLL FREE: (800) 564-1097
TEL: (978) 263-9800
FAX: (978) 264-9172
http://www.lmipumps.com

Replaces same of Rev. G 2/98
1417. H 4/02

Configuration Data & Materials of Construction

Drive Assembly	Liquid End No.	Size Code	Materials of Construction: Head & Fittings	Balls	Liquiflram™	Check Valve	Accessory	Tubing & Connections: Discharge	Suction
B92 ▩ -	498SI†	0.9	PVC / PVC	Ceramic	Fluorofilm™	PVDF / Polyprel®	4FV	PE .375" O.D.	
B91 ▩ -	490SI†	0.9	Acrylic / PVC	Ceramic	Fluorofilm™	PVDF / Polyprel®	4FV	PE .375" O.D.	
B72 ▩ -	490FI	0.9	Acrylic / PVDF	Ceramic	Fluorofilm™	PVDF / Polyprel®	4FV	PE .375" O.D.	
B71 ▩ -	398SI†	0.9	PVC / PVC	Ceramic	Fluorofilm™	PVDF / Polyprel®	4FV	PE .375" O.D.	
B12 ▩ -	393SI†	0.9	PVDF / PVDF	Ceramic	Fluorofilm™	PVDF / PTFE	4FV	PE .375" O.D.	
B11 ▩ -	392SI†	0.9	PVDF / PVDF	Ceramic	Fluorofilm™	PVDF / Polyprel®	4FV	PE .375" O.D.	
	85HV	0.9	Polypropylene	316 S.S.	Fluorofilm™	PTFE		PE .5" O.D.	Vinyl .938" O.D.
	86HV	0.9	Acrylic / PP	316 S.S.	Fluorofilm™	Hypalon®		PE .5" O.D.	Vinyl .938" O.D.
	89	0.9	UHMW PE	Ceramic	Hypalon®	Hypalon®		PE .5" O.D.	Vinyl .500" O.D.
	95S**	0.9	Polypropylene	Ceramic	Fluorofilm™	PTFE	4FV	PE .375" O.D.	
	297	0.9	316 S.S.	316 S.S.	Fluorofilm™	316 S.S.		Pipe 1/4" NPT M	
B93 ▩ -	468SI†	1.8	PVC / PVC	Ceramic	Fluorofilm™	PVDF / Polyprel®	4FV	PE .375" O.D.	
B73 ▩ -	460SI†	1.8	Acrylic / PVC	Ceramic	Fluorofilm™	PVC / Polyprel®	4FV	PE .375" O.D.	
B13 ▩ -	460FI	1.8	Acrylic / PVDF	Ceramic	Fluorofilm™	PVDF / Polyprel®	4FV	PE .375" O.D.	
	368SI†	1.8	PVC / PVC	Ceramic	Fluorofilm™	PVC / Polyprel®	4FV	PE .375" O.D.	
	363SI†	1.8	PVDF / PVDF	Ceramic	Fluorofilm™	PVDF / PTFE	4FV	PE .375" O.D.	
	362SI†	1.8	PVDF / PVDF	Ceramic	Fluorofilm™	PVDF / Polyprel®	4FV	PE .375" O.D.	
	75HV	1.8	Polypropylene	316 S.S.	Fluorofilm™	PTFE		PE .5" O.D.	Vinyl .938" O.D.
	75S**	1.8	Polypropylene	Ceramic	Fluorofilm™	PTFE	4FV	PE .5" O.D.	
	76HV	1.8	Acrylic / PP	316 S.S.	Fluorofilm™	Hypalon®		PE .5" O.D.	Vinyl .938" O.D.
	79	1.8	UHMW PE	Ceramic	Hypalon®	Hypalon®		PE .5" O.D.	Vinyl .500" O.D.
	277	1.8	316 S.S.	316 S.S.	Fluorofilm™	316 S.S.		Pipe 1/4" NPT M	
B94 ▩ -	418SI†	3.0	PVC / PVC	Ceramic	Fluorofilm™	PVC / Polyprel®	4FV	PE .5" O.D.	
B74 ▩ -	410SI†	3.0	Acrylic / PVC	Ceramic	Fluorofilm™	PVC / Polyprel®	4FV	PE .5" O.D.	
B14 ▩ -	410FI	3.0	Acrylic / PVDF	.375 PTFE	Fluorofilm™	PVDF / Polyprel®	4FV	PE .5" O.D.	
	318SI†	3.0	PVC / PVC	Ceramic	Fluorofilm™	PVC / Polyprel®	4FV	PE .5" O.D.	
	312SI†	3.0	PVDF / PVDF	Ceramic	Fluorofilm™	PVDF / Polyprel®	4FV	PE .5" O.D.	
	313SI†	3.0	PVDF / PVDF	Ceramic	Fluorofilm™	PVDF / PTFE	4FV	PE .5" O.D.	
	15S**	3.0	Polypropylene	Ceramic	Fluorofilm™	PTFE	4FV	PE .5" O.D.	
	217	3.0	316 S.S.	316 S.S.	Fluorofilm™	316 S.S.		Pipe 1/4" NPT M	

▩ See front page for voltage code specifications.

** These Liquid Ends are available without a 4FV.

† To specify ¼" NPT male, change 'I' to 'P'. To specify black, UV resistant tubing, change 'I' to 'U'. To specify Bleed 4FV, change 'S' to 'B'. To specify 3FV, change 'S' to'T'.

3FV Indicates that the pump is equipped with an LMI Three Function Valve (pressure relief, priming aid, line drain).

4FV Indicates that the pump is equipped with an LMI Four Function Valve. This diaphragm type anti-syphon/pressure relief valve is installed on the pump head. It provides anti-syphon protection and aids in priming, even under pressure.

Fluorofilm™ is a copolymer of PTFE and PFA.
Polyprel® is an elastomeric PTFE copolymer.

Polyprel is a registered trademark of Liquid Metronics Incorporated. Fluorofilm is a trademark of Liquid Metronics Incorporated. Hypalon is a registered trademark of E. I. du Pont de Nemours & Co., Inc.

Output Information

Series	Gallons per Hour* Min	Max	Liters per Hour* Min	Max	mL/cc per Minute* Min	Max	mL/cc per Stroke Min	Max	Maximum Injection Pressure
B11, B71, B91†	0.002	1.6	0.006	6.1	0.10	101	0.10	1.01	150 psi (10.30 Bar)
B12, B72, B92†	0.003	2.5	0.009	9.5	0.16	158	0.16	1.58	100 psi (6.90 Bar)
B13, B73, B93†	0.005	4.5	0.017	17.0	0.28	284	0.28	2.84	50 psi (3.50 Bar)
B14, B74, B94†	0.007	7.0	0.027	26.5	0.44	442	0.44	4.42	30 psi (2.07 Bar)

*Minimum output is based on one (1) stroke per minute and 10% stroke setting, minimum output can be reduced further in external mode.

†Series B9 pumps may be programmed for strokes per hour for lower outputs.

© 2002 LMI Milton Roy - All Rights Reserved
Printed in USA
Specifications subject to change without notice.

Specification Sheet
Series B

GENERAL
Chemical metering pumps shall be positive displacement, Liquifram™ type pumps that are UL and CUL approved. Output volume shall be adjustable while pumps are in operation from zero to maximum capacity of:

B11, B71, B91 - 1.6 GPH (6.1 liters per hour)
B12, B72, B92 - 2.5 GPH (9.5 liters per hour)
B13, B73, B93 - 4.5 GPH (17.0 liters per hour)
B14, B74, B94 - 7.0 GPH (26.5 liters per hour)

Chemical metering pumps shall be capable, without a hydraulically backed diaphragm, of injecting solutions against pressures up to:

B11, B71, B91 - 150 psig(10:3 bar)
B12, B72, B92 - 100 psig(6.9 bar)
B13, B73, B93 - 50 psig(3.4 bar)
B14, B74, B94 - 30 psig(2.1 bar)

SERIES B1
Adjustment shall be by means of readily accessible dial knobs, one for changing stroke length and the other for changing stroke frequency. Both knobs are to be located opposite the liquid handling end.

SERIES B7
Control of Series B7 metering pumps shall be selectable between internal and external pulsing by means of a 3-position center-off switch. Stroke length shall be adjustable by means of readily accessible dial knob. When in external pulsed mode, Series B7 units shall accept signals without the use of electrical timer or internal timer. Pressure capacity shall be adjustable to reduce noise, vibration and wear.

SERIES B9
Series B9 metering pumps shall have a clear liquid crystal display. Control shall be selectable between internal and external pulsing by means of a tactile keypad. Internal stroke frequency shall be adjustable from 1 stroke per hour to 100 strokes per minute. Pressure capacity shall be keypad adjustable to reduce noise, vibration and wear. Metering pump shall be capable of dividing or multiplying pulse inputs from 1 to 999 or responding directly or inversely to a 4-20mA input signal.

DRIVE
The pump drive shall be totally enclosed with no exposed moving parts. Solid state electronic pulser shall be fully encapsulated and supplied with quick connect terminals at least 3/16" (4.75 mm) wide. Electronics shall be housed in chemical resistant enclosure at the rear of the pump for maximum protection against chemical spillage. Electrical power consumption shall not exceed 29 watts per hour under full speed and maximum pressure conditions. Pump weight shall not exceed 15 lbs (6.9 kg).

AUTOMATIC PRESSURE RELIEF
To eliminate need for pressure relief valve, Liquifram™ shall automatically stop pulsating when discharge pressure exceeds pump pressure rating by not more than 35%.

MATERIAL
Chemical metering pump housing shall be of chemically resistant glass fiber reinforced thermoplastic. All exposed fasteners shall be stainless steel. Chemical metering pump valves shall be ball type, with ceramic balls[1]. Valve seat and seal ring shall be renewable by replacing the combination seat-seal ring[2] or cartridge valve assembly. Pump head shall be of transparent acrylic[3] material capable of resisting the pumped chemical. Fittings and connections at pump head shall be PVC[4].

CHECK VALVES AND TUBING
A total of 16 ft (4.8 m) of polyethylene tubing[5] shall be provided per pump complete with compression connections. A foot valve with integral one piece strainer shall be provided for the suction line, and an injection/back pressure check valve with ½" NPT male connection for the injection point. The injection check valve shall incorporate a dilating orifice which prohibits scale formation and accumulation of crystalline deposits.

Notes:
1. Type 316 stainless steel or PTFE may be specified.
2. Hypalon®, PTFE or Polyprel® may be specified.
3. PVDF, PVC, Polypropylene, or Type 316 stainless steel may be specified.
4. PVDF, Polypropylene, or Type 316 stainless steel may be specified.
5. 6 ft (1.8 m) of vinyl suction tubing may be specified in place of polyethylene for the suction side only. 1/4" or 1/2" pipe thread may be specified.

LMI MILTON ROY
8 Post Office Square
Acton, MA 01720 USA
TEL: (978) 263-9800
FAX: (978) 264-9172
http://www.lmipumps.com

Replaces same of Rev. F 7/96
1034. G 12/99

B Series

LE Codes	W	X	Y	Z
71T, 72T, 75T, 81T, 82T, 85T	3.25 (82.5mm)	8.5 (216.0mm)	.65 (16.5mm)	10.70 (271.8mm)
71S, 72S, 75S 81S, 82S, 85S	4.55(115.6mm)	9.7 (246.5mm)	.65 (16.5mm)	12.00 (304.8mm)
74, 94	3.25 (82.5mm)	8.5 (216.0mm)	.65 (16.5mm)	10.70 (271.8mm)
76, 86	3.55 (90.2mm)	9.5 (241.3mm)	.65 (16.5mm)	11.00 (279.4mm)
77, 97	3.25 (82.5mm)	8.5 (216.0mm)	.65 (16.5mm)	10.70 (271.8mm)
91T, 92T, 95T	3.25 (82.5mm)	8.5 (216.0mm)	.65 (16.5mm)	10.70 (271.8mm)
91S, 91FS 92S, 95S	4.55(115.6mm)	9.7 (246.5mm)	.65 (16.5mm)	12.00 (304.8mm)

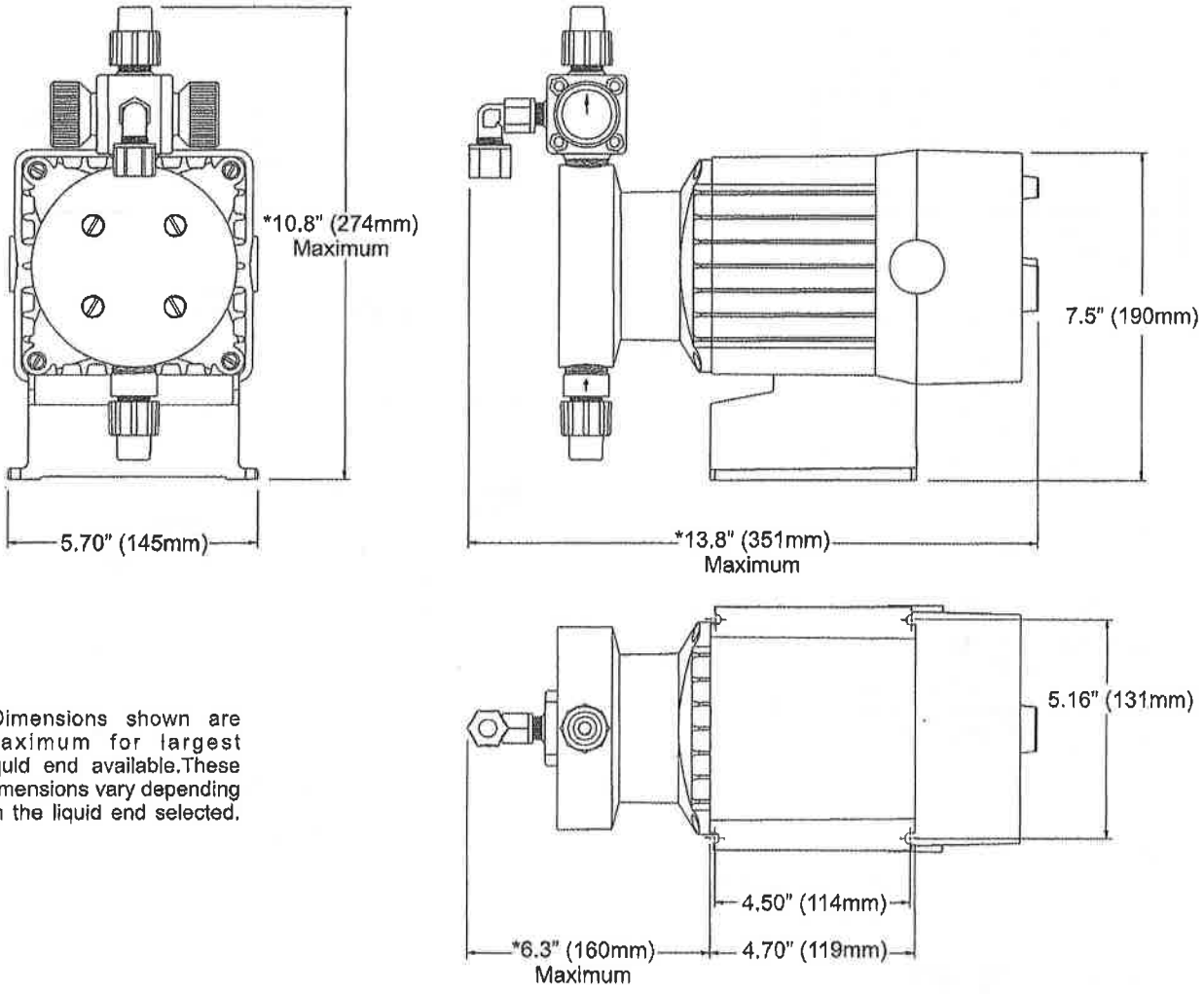

*Dimensions shown are maximum for largest liquid end available.These dimensions vary depending on the liquid end selected.

© 1999 LMI Milton Roy - All Rights Reserved
Printed in USA
Specifications subject to change without notice.

Polypre! is a registered trademark of Liquid Metronics Incorporated.
Liquifram, Liquitron, Micropace are trademarks of Liquid Metronics Incorporated.
Hypalon and Viton are registered trademarks of E. I. du Pont de Nemours & Co., Inc.

C771-26S & C781-35HV PUMPS

Data Sheet

Series C

Electronic Metering Pumps

Configuration Data

Model C92 1 - 363SI

Control & Output Code

Manual Control

Speed (stroking frequency) and stroke length manually adjustable.

C10 --- 1.3 GPH (4.9 l/h) ... 300 psi (20.7 Bar)
C11 --- 2.5 GPH (9.5 l/h) ... 150 psi (10.3 Bar)
C12 --- 4.0 GPH (15.1 l/h) ... 100 psi (6.9 Bar)
C13 --- 8.0 GPH (30 l/h) ..... 60 psi (4.1 Bar)
C14 --- 20 GPH (76 l/h) ..... 25 psi (1.7 Bar)

Instrument Responsive/Manual Control

Manual adjustment features of C1 Series plus switch conversion to external control for automatic systems.

C70 --- 1.3 GPH (4.9 l/h) ... 300 psi (20.7 Bar)
C71 --- 2.5 GPH (9.5 l/h) ... 150 psi (10.3 Bar)
C72 --- 4.0 GPH (15.1 l/h) ... 100 psi (6.9 Bar)
C73 --- 8.0 GPH (30 l/h) ..... 60 psi (4.1 Bar)
C74 --- 20 GPH (76 l/h) ..... 25 psi (1.7 Bar)
C76 --- 4.0 GPH (15.1 l/h) .... 175 psi (12.1 Bar)
C77 --- 10 GPH (38 l/h) ..... 80 psi (5.5 Bar)
C78 --- 25 GPH (95 l/h) ..... 30 psi (2.07 Bar)
C90 --- 1.3 GPH (4.9 l/h) .... 300 psi (20.7 Bar)
C91 --- 2.5 GPH (9.5 l/h) .... 150 psi (10.3 Bar)
C92 --- 4.0 GPH (15.1 l/h) .... 100 psi (6.9 Bar)
C93 --- 8.0 GPH (30 l/h) ..... 60 psi (4.1 Bar)
C94 --- 20 GPH (76 l/h) ..... 25 psi (1.7 Bar)

Voltage Code

1 ------- 120 VAC US Plug
2 ------- 240 VAC US Plug
3 ------- 220-240 VAC DIN Plug
5 ------- 240-250 VAC, UK Plug
6 ------- 240-250 VAC, AUST/NZ Plug
7 ------- 220-240 VAC, SWISS Plug

Liquid End

See next page for complete liquid end specifications and selection.

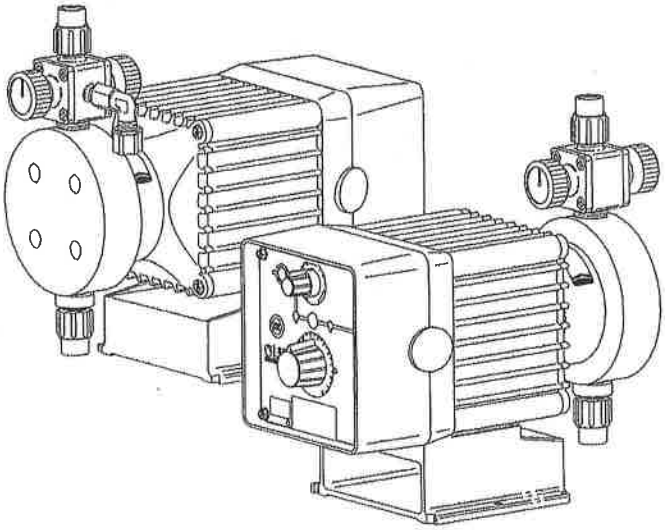

Specifications

Series	Strokes Per Minute (Adjustable) Min	Max	Stroke Length (Adjustable) Recommended Minimum	Average Input Power @Max Speed	Shipping Weight
C10, C70, C90 C11, C71, C91 C12, C72, C92 C13, C73, C93 C14, C74, C94	1	100	10%	44 watts	20 lbs (9.1 kg)
C76 C77 C78	1	100	10%	87 watts	28 lbs (12.7 kg)

Dimensions

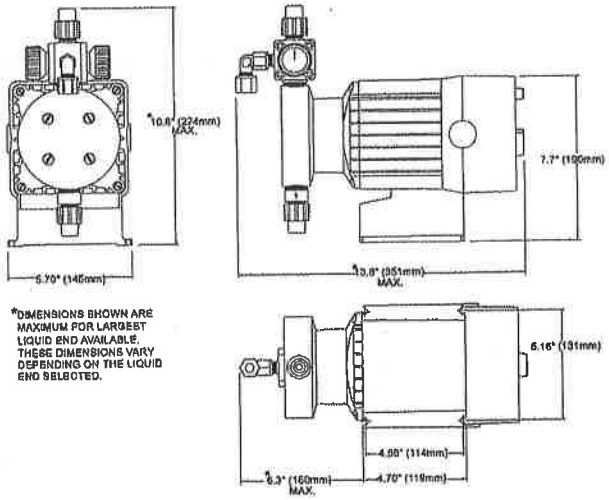

*DIMENSIONS SHOWN ARE MAXIMUM FOR LARGEST LIQUID END AVAILABLE. THESE DIMENSIONS VARY DEPENDING ON THE LIQUID END SELECTED.

LMI MILTON ROY

Florida Water Processing
http://www.watertreatmentsupply.com
800-783-4397

Polypro® is a registered trademark of Liquid Metronics Incorporated. Flourofilm and Liquiflram are trademarks of Liquid Metronics Incorporated. Hypalon and Viton are registered trademarks of E. I. du Pont de Nemours & Co., Inc.

© 2001 LMI Milton Roy - All Rights Reserved
Printed in USA

Replaces same of Rev.D 10/99
1712.E 11/01

Configuration Data & Materials of Construction

Drive Assembly	Liquid End No.	Size Code	Materials of Construction: Head & Fittings	Balls	Liquifram™	Check Valve	Accessory	Tubing & Connections: Discharge	Suction
C90 ▦ -	498SP	0.9	PVC	Ceramic	Fluorofilm™	PTFE	4FV	Pipe 1/4" NPT M	
C70 ▦ -	297	0.9	316 S.S.	316 S.S.	Fluorofilm™	316 S.S.		Pipe 1/4" NPT M	
C10 ▦ -									
	468SI	1.8	PVC / PVC	Ceramic	Fluorofilm™	PVDF / Polyprel®	4FV	PE .375" O.D.	
	460SI†	1.8	Acrylic / PVC	Ceramic	Fluorofilm™	PVDF / Polyprel®	4FV	PE .375 O.D.	
	460FI	1.8	Acrylic / PVC	PTFE	Fluorofilm™	PVDF / Polyprel®	4FV	PE .375 O.D.	
	368SI†	1.8	PVC / PVC	Ceramic	Fluorofilm™	PVDF / Polyprel®	4FV	PE .375" O.D.	
C92 ▦ -	362SI†	1.8	PVDF / PVDF	Ceramic	Fluorofilm™	PVDF / Polyprel®	4FV	PE .375" O.D.	
C91 ▦ -	363SI†	1.8	PVDF / PVDF	Ceramic	Fluorofilm™	PVDF / PTFE	4FV	PE .375" O.D.	
C72 ▦ -	75HV	1.8	Polypropylene	316 S.S.	Fluorofilm™	PTFE		PE .5" O.D.	Vinyl .938" O.D.
C71 ▦ -	75S*	1.8	Polypropylene	Ceramic	Fluorofilm™	PTFE	4FV	PE .5" O.D.	
C12 ▦ -	76HV	1.8	Acrylic/PP	316 S.S.	Fluorofilm™	Hypalon®		PE .5" O.D.	Vinyl .938" O.D.
C11 ▦ -	79	1.8	UHMW PE	Ceramic	Hypalon®	Hypalon®		PE .5" O.D.	Vinyl .5" O.D.
	277	1.8	316 S.S.	316 S.S.	Fluorofilm™	316 S.S.		Pipe 1/4" NPT M	
	418SI#	3.0	PVC / PVC	Ceramic	Fluorofilm™	PVDF / Polyprel®	4FV	PE .5" O.D.	
	410SI†#	3.0	Acrylic / PVC	Ceramic	Fluorofilm™	PVDF / Polyprel®	4FV	PE .5" O.D.	
	410FI†#	3.0	Acrylic / PVC	PTFE	Fluorofilm™	PVDF / Polyprel®	3FV	PE .5" O.D.	
C93 ▦ -	318SI†#	3.0	PVC / PVC	Ceramic	Fluorofilm™	PVDF / Polyprel®	4FV	PE .5" O.D.	
C73 ▦ -	313SI†#	3.0	PVDF / PVDF	Ceramic	Fluorofilm™	PVDF / PTFE	4FV	PE .5" O.D.	
C13 ▦ -	312SI†#	3.0	PVDF / PVDF	Ceramic	Fluorofilm™	PVDF / Polyprel®	4FV	PE .5" O.D.	
	20HV	3.0	Acrylic / PP	316 S.S.	Fluorofilm™	Hypalon®		PE .5" O.D.	Vinyl .938" O.D.
	22	3.0	PVDF	Ceramic	Fluorofilm™	PTFE		PE .5" O.D.	
	22P	3.0	PVDF	Ceramic	Fluorofilm™	PTFE		Pipe 1/2" NPT M	
	24	3.0	PVC	Ceramic	Fluorofilm™	PTFE		Pipe 1/2" NPT M	
	25HV	3.0	Polypropylene	316 S.S.	Fluorofilm™	PTFE		PE .5" O.D.	Vinyl .938" O.D.
	25P	3.0	Polypropylene	Ceramic	Fluorofilm™	PTFE		Pipe 1/2" NPT M	
	25T	3.0	Polypropylene	Ceramic	Fluorofilm™	PTFE		PE .5" O.D.	
	27	3.0	316 S.S.	316 S.S.	Fluorofilm™	PTFE		Pipe 1/2" NPT M	
	29	3.0	UHMW PE	Ceramic	Fluorofilm™	Hypalon®		PE .5" O.D.	
	30	6.0	Acrylic/PVC	Ceramic	Fluorofilm™	PTFE		PE .5" O.D	Vinyl .5" O.D.
	32	6.0	PVDF	Ceramic	Fluorofilm™	PTFE		PE .5" O.D.	
C94 ▦ -	32P	6.0	PVDF	Ceramic	Fluorofilm™	PTFE		Pipe 1/2" NPT M	
C78 ▦ -	34	6.0	PVC	Ceramic	Fluorofilm™	PTFE		Pipe 1/2" NPT M	
C74 ▦ -	35P	6.0	Polypropylene	Ceramic	Fluorofilm™	PTFE		Pipe 1/2" NPT M	
C14 ▦ -	35T	6.0	Polypropylene	Ceramic	Fluorofilm™	PTFE		PE .5" O.D.	
	36	6.0	PVC	Ceramic	Fluorofilm™	PTFE		PE .5" O.D.	
	37	6.0	316 S.S.	316 S.S.	Fluorofilm™	PTFE		Pipe 1/2" NPT M	
	468SP	1.8	PVC/PVC	Ceramic	Fluorofilm™	PVDF / Polyprel®	4FV	PE .375" O.D.	
C76 ▦ -	74S	1.8	Polypropylene	Ceramic	Fluorofilm™	PTFE	4FV	Pipe 1/4" NPT M	
	277	1.8	316 S.S.	316 S.S.	Fluorofilm™	316 S.S.		Pipe 1/4" NPT M	
	20HV	3.0	Acrylic/PP	316 S.S.	Fluorofilm™	Hypalon®		PE .5" O.D.	Vinyl .938" O.D.
	20S**	3.0	Acrylic/PVC	Ceramic	Fluorofilm™	Hypalon®	4FV	PE .5" O.D.	Vinyl .5" O.D.
	22	3.0	PVDF	Ceramic	Fluorofilm™	PTFE		Pipe 1/2" NPT M	
	22P	3.0	PVDF	Ceramic	Fluorofilm™	PTFE	4FV	Pipe 1/2" NPT M	
C77 ▦ -	24	3.0	PVC	Ceramic	Fluorofilm™	PTFE		Pipe 1/2" NPT M	
	25HV	3.0	Polypropylene	316 S.S.	Fluorofilm™	PTFE		PE .5" O.D.	Vinyl .938" O.D.
	25P	3.0	Polypropylene	Ceramic	Fluorofilm™	PTFE		Pipe 1/2" NPT M	
	25T	3.0	Polypropylene	Ceramic	Fluorofilm™	PTFE		PE .5" O.D.	
	26S**	3.0	PVC	Ceramic	Fluorofilm™	Viton®	4FV	PE .5" O.D.	
	27	3.0	316 S.S.	316 S.S.	Fluorofilm™	PTFE		Pipe 1/2" NPT M	
	29	3.0	UHMW PE	Ceramic	Fluorofilm™	Hypalon®		PE .5" O.D.	

▦ See front page for voltage code specifications.
**These Liquid Ends are available without a 4FV, simply drop the 'S' at the end of the Liquid End number to order the model without a 4FV.
#These liquid ends use 3/8" diameter balls. Pump output may be reduced in some applications.

†To specify ¼" NPT male, change 'I' to 'P'. To specify black, UV resistant tubing, change 'I' to 'U'. To specify Bleed 4FV, change 'S' to 'B'. To specify 3FV, change 'S' to 'T'.
Fluorofilm™ is a copolymer of PTFE and PFA.
Polyprel® is an elastomeric PTFE copolymer.

4FV indicates that the pump is equipped with an LMI Four Function Valve. This diaphragm type anti-syphon/pressure relief valve is installed on the pump head. It provides anti-syphon protection and aids in priming, even under pressure.

Output Information

Series	Gallons per Hour Min	Gallons per Hour Max	Liters per Hour Min	Liters per Hour Max	mL/cc per Minute Min	mL/cc per Minute Max	mL/cc per Stroke Min	mL/cc per Stroke Max	Maximum Injection Pressure
C10, C70*, C90*	0.001	1.3	0.005	4.9	0.08	82	0.08	0.82	300 psi (20.7 Bar)
C11, C71*, C91*	0.003	2.5	0.010	9.5	0.16	158	0.16	1.58	150 psi (10.3 Bar)
C12, C72*, C92*	0.004	4.0	0.015	15.1	0.25	252	0.25	2.52	100 psi (6.9 Bar)
C13, C73*, C93*	0.008	8.0	0.030	30.0	0.51	505	0.51	5.05	60 psi (4.1 Bar)
C14, C74*, C94*	0.020	20.0	0.076	76.0	1.26	1262	1.26	12.62	25 psi (1.7 Bar)
C76*	0.004	4.0	0.015	15.1	0.25	252	0.25	2.52	175 psi (12.1 Bar)
C77*	0.010	10.0	0.038	38.0	0.63	631	0.63	6.31	80 psi (5.5 Bar)
C78*	0.025	25.0	0.095	95.0	1.58	1577	1.58	15.77	30 psi (2.07 Bar)

*Minimum output is based on 1 stroke per minute and 10% stroke setting, minimum output can be reduced further in external mode. Series C9 pumps may be programmed for strokes per hour for lower outputs.

Specification Sheet

Series C

GENERAL

Chemical metering pumps shall be positive displacement, Liquifram™ type pumps that are UL and CUL approved. Output volume shall be adjustable while pumps are in operation from zero to maximum capacity of:

C10, C70, C90	- 1.3 GPH	(4.9 liters per hour)
C11, C71, C91	- 2.5 GPH	(9.5 liters per hour)
C12, C72, C92	- 4.0 GPH	(15.1 liters per hour)
C13, C73, C93	- 8.0 GPH	(30.0 liters per hour)
C14, C74, C94	- 20.0 GPH	(75.7 liters per hour)
C76*	- 4.0 GPH	(15.1 liters per hour)
C77*	- 10.0 GPH	(38.0 liters per hour)
C78*	- 25.0 GPH	(95.0 liters per hour)

Chemical metering pumps shall be capable, without a hydraulically backed diaphragm, of injecting solutions against pressures up to:

C10, C70, C90	- 300 psig	(20.7 bar)
C11, C71, C91	- 150 psig	(10.3 bar)
C12, C72, C92	- 100 psig	(6.9 bar)
C13, C73, C93	- 60 psig	(4.1 bar)
C14, C74, C94	- 25 psig	(1.7 bar)
C76*	- 175 psig	(12.1 bar)
C77*	- 80 psig	(5.5 bar)
C78*	- 30 psig	(2.1 bar)

TYPE C1

Adjustment shall be by means of readily accessible dial knobs, one for changing stroke length and the other for changing stroke frequency (speed). Both knobs are to be located opposite the liquid handling end.

TYPE C7

Control of Series C7 metering pumps shall be selectable between internal and external pulsing by means of a 3-position center-off switch. Stroke length shall be adjustable by means of readily accessible dial knob. When in external pulsed mode, Series C7 units shall accept signals without the use of electrical timer or internal timer. Pressure capacity shall be adjustable to reduce noise, vibration and wear.

TYPE C9

Series C9 metering pumps shall have a clear liquid crystal display. Control shall be selectable between internal and external pulsing by means of a tactile keypad. Internal stroke frequency shall be adjustable from 1 stroke per hour to 100 strokes per minute. Pressure capacity shall be keypad adjustable to reduce noise, vibration and wear. Metering pump shall be capable of dividing or multiplying pulse inputs from 1 to 999 or responding directly or inversely to a 4-20mA input signal.

DRIVE

The pump drive shall be totally enclosed with no exposed moving parts. Solid state electronic pulser shall be encapsulated and supplied with quick connect terminals at least 3/16" (4.75 mm) wide. Electronics shall be housed in chemical resistant enclosure at the rear of the pump for maximum protection against chemical spillage. Electrical power consumption shall not exceed 87 watts under full speed and maximum pressure conditions. Pump weight shall not exceed 28 lbs (12.7 kg).

AUTOMATIC PRESSURE RELIEF

To eliminate need for pressure relief valve, Liquifram™ shall automatically stop pulsating when discharge pressure exceeds pump pressure rating by not more than 35%.

MATERIAL

Chemical metering pump housing shall be of chemically resistant glass fiber reinforced thermoplastic with a glass fiber reinforced polypropylene EPU carrier[1]. All exposed fasteners shall be stainless steel. Chemical metering pump valves shall be ball type, with ceramic balls[2]. Valve seat and seal ring shall be renewable by replacing the combination seat-seal ring[3] or cartridge valve assembly. Pump head shall be of transparent acrylic[4] material capable of resisting the pumped chemical. Fittings and connections at pump head shall be PVC[5].

CHECK VALVES AND TUBING

A total of 16 ft (4.8 m) of polyethylene tubing[6] shall be provided per pump complete with compression connections. A foot valve with integral one piece strainer shall be provided for the suction line, and an injection check/back pressure valve with ½" NPT male connection for the injection point. The injection check valve shall incorporate a dilating orifice which prohibits scale formation and accumulation of crystalline deposits.

(* - Not UL or CUL Approved)

Notes:

1. With plastic coated cast iron EPU carrier for Series C 76, C77 and C78.
2. Type 316 stainless steel or PTFE may be specified.
3. Hypalon®, PTFE, Viton® or Polyprel® may be specified.
4. PVC, Polypropylene, PDVF or Type 316 stainless steel may be specified.
5. PVDF, Polypropylene, or Type 316 stainless steel may be specified.
6. 6 ft. (1.8 m) of vinyl suction tubing may be specified in place of polyethylene for the suction side only. 1/4" or 1/2" male pipe thread may be specified.

LMI MILTON ROY

201 Ivyland Road
Ivyland, PA 18974 USA
TOLL FREE: (800) 564-1097
TEL: (215) 293-0401
FAX: (215) 293-0445
http://www.lmipumps.com

Replaces same of Rev.E 8/05
1619. F 11/06

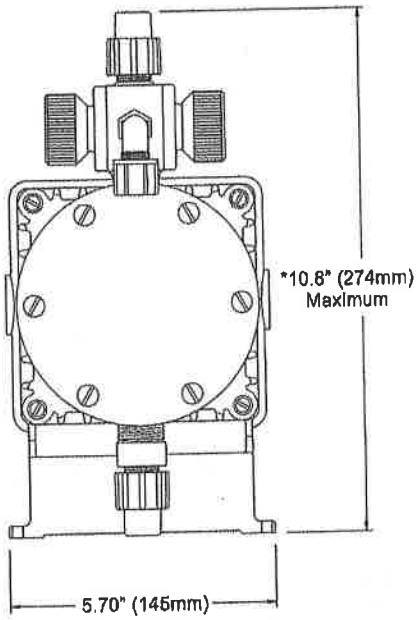

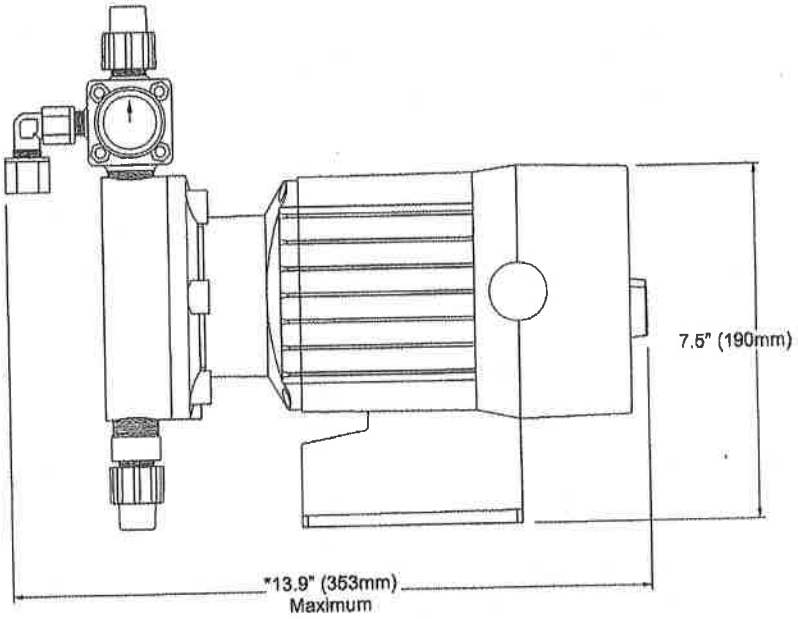

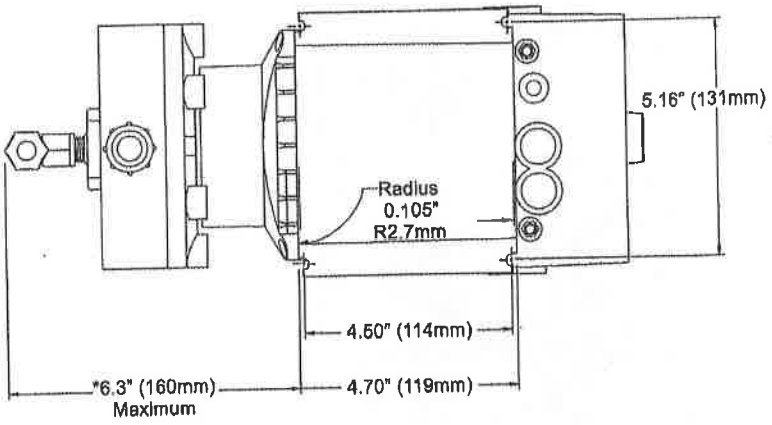

*Dimensions shown are maximum for largest liquid end available. These dimensions vary depending on the liquid end selected.

© 2005 LMI Milton Roy - All Rights Reserved
Printed in USA
Specifications subject to change without notice.

Polypro is a registered trademark of Liquid Metronics Incorporated
Liquifram is a trademark of Liquid Metronics Incorporated
Hypalon and Viton are registered trademarks of E. I. du Pont de Nemours & Co., Inc.

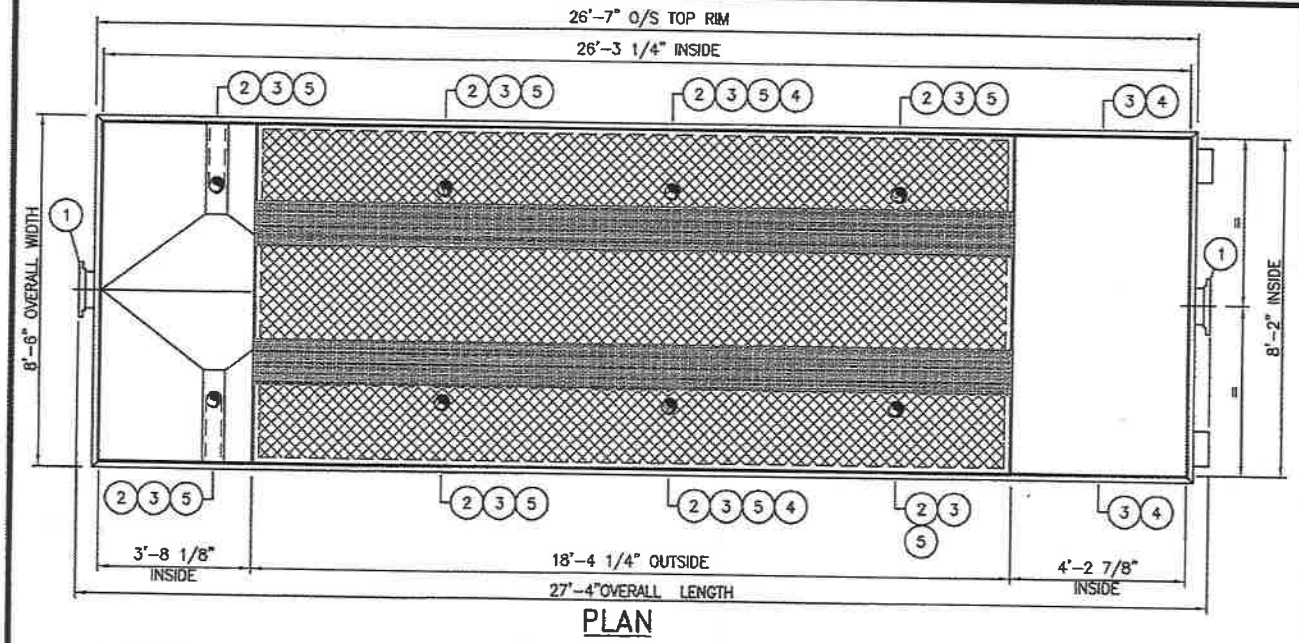

PLAN

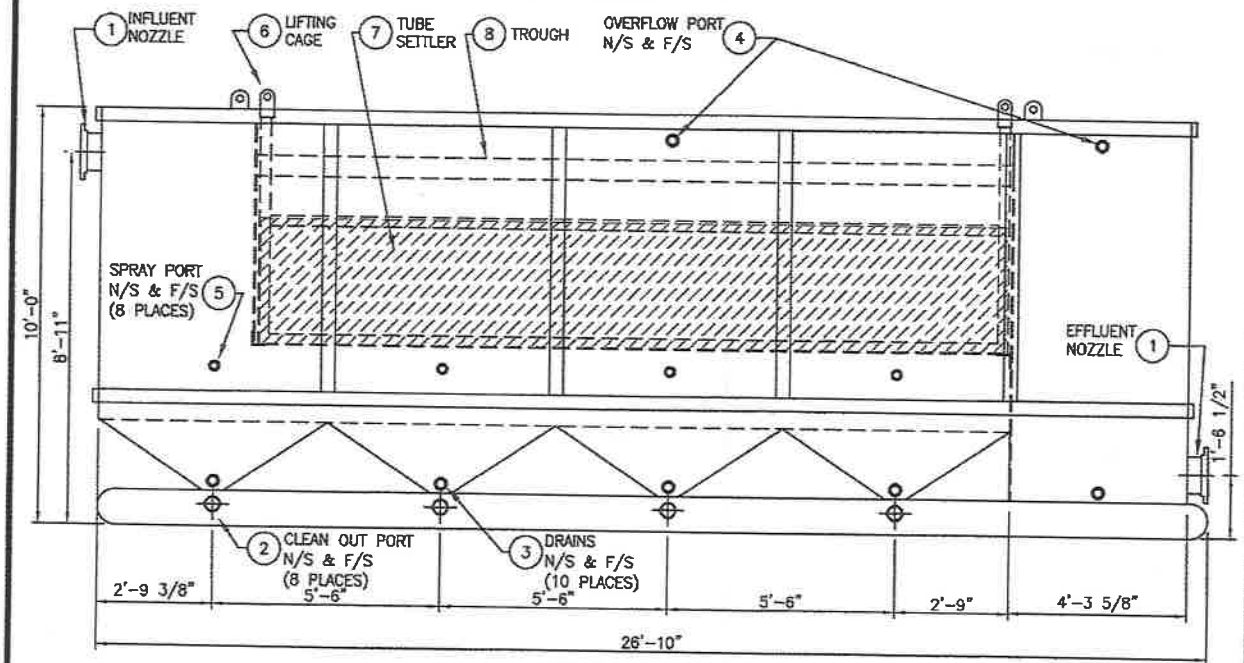

ELEVATION

#	QTY.	DESCRIPTION
1	2	INFLUENT/EFFLUENT NOZZLE W/ 10" 150LB FLG.
2	8	CLEAN OUT PORT W/ 4" NPT PIPE
3	8	DRAIN PORT, W/ 2" CUPL'G FNPT
4	4	OVERFLOW PORT, W/ 2" CUPL'G FNPT
5	8	SPRAY PORT, W/ 1" CUPL'G FNPT
6	1	PACKING REMOVAL CAGE
7	1	41 INCH DEEP TUBE SETTLER
8	2	OVERFLOWN TROUGH

GENERAL NOTES:

DESIGN DATA

- ATMATSPHERIC PRESSURE VESSEL
- TEMP. RATED @ 150 DEG. F.

- DESIGN FLOW RATE: 400 GPM
- MAXIMUM FLOW RATE: 400 GPM

MATERIAL OF CONSTRUCTION

- CARBON STEEL GRADE A36 UNLESS NOTED OTHERWISE.

SURFACE FINISH

- INTERIOR SANDBLASTED TO SSPC-SP-5 WHITE METAL FINISH AND COTED WITH POLYAMIDE EPOXY COATING BY "BENJAMIN MOORE & CO (INDUSTRIAL GRAY).

- EXTERIOR ARE PREPARED PRIOR TO PAINTING PER SSPC-SP1 (WIRE BRUSH WITH SOLVENT WIPE) AS A MINIMUM. IF RUST OR MILL SCALE IS PREVALENT, STRUCTURE WILL BE FINISHED WITH SSPC-SPC3 POWER TOOL CLEANING AND SOLVENT WIPE) PREPARATION AND COATED WITH PRIMER AND HIGH GRAD INDUSTRIAL COATING BY BENJAMIN MOORE & CO. (INDUSTRIAL BLUE) OR EQUAL.

LOADING

- VESSEL EMPTY: (to come) LBS.
- VESSEL FLOODED DURING OPERATION: (to come) LBS

NO.	REVISIONS	DATE
A	FOR INFORMATION ONLY	04/25/06

400 GPM CLARIFIER GENERAL SPECIFICATION

SCALE:	NONE	APPROVED:	DRAWN BY: TLo
DATE:	04/25/06		

GROUND/WATER TREATMENT & TECHNOLOGY
P.O. BOX 1174
DENVILLE, NJ 07834

FILE: 14-1000/C400-01 DRAWING NUMBER: SP-01

ACCU-PAC® TUBE SETTLERS

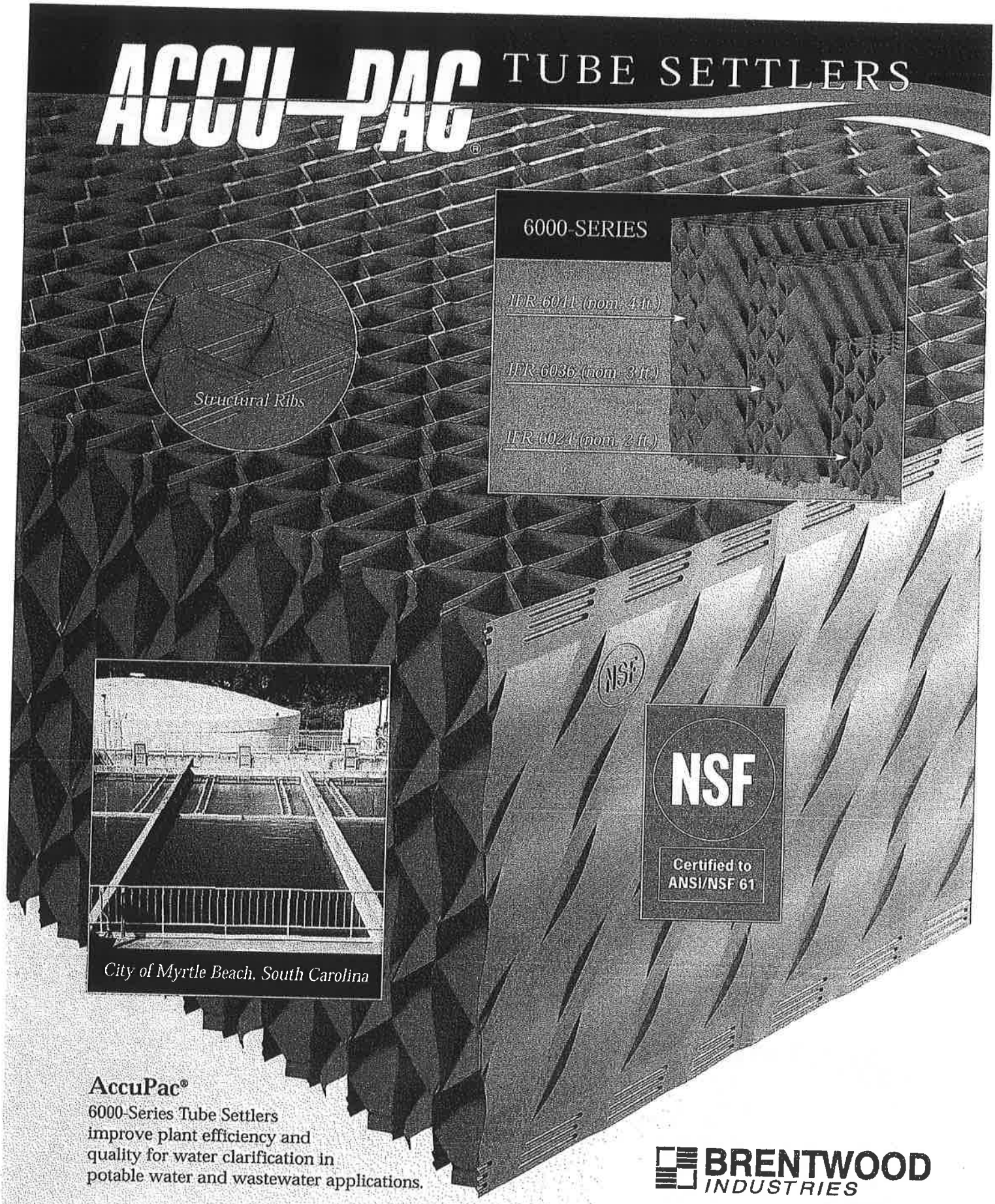

AccuPac®
6000-Series Tube Settlers
improve plant efficiency and
quality for water clarification in
potable water and wastewater applications.

BRENTWOOD INDUSTRIES

ACCU-PAC® TUBE SETTLERS

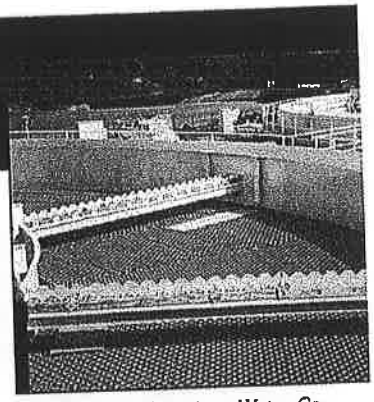

New Jersey-American Water Co.
Tinton Falls, New Jersey

AccuPac® 6000-Series Tube Settlers utilize individual, isolated tubular channels, each sloped at 60°, to expand the settling capacity of water and wastewater clarifiers. Engineered with the individual tubes rising in the same direction to eliminate mixing currents and unstable flow patterns. Constructed of flame-resistant, self-extinguishing PVC that is also inert to naturally occurring constituents in water and wastewater. Potable (blue) 6000-series modules are Tested and Certified by NSF to ANSI/NSF Standard 61.

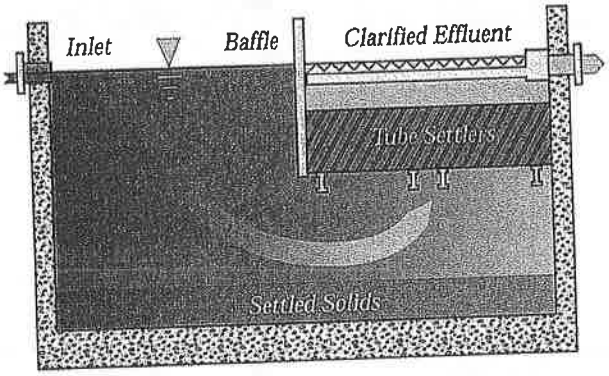

IMPROVE EFFICIENCY

The shape and configuration of 6000-series modules are engineered to minimize the Reynolds Number and to create laminar flow for rapid settling of solids. This enhanced settling reduces chemical coagulant use and downstream filter backwash requirements. For plant design and upgrading, less settling area is needed.

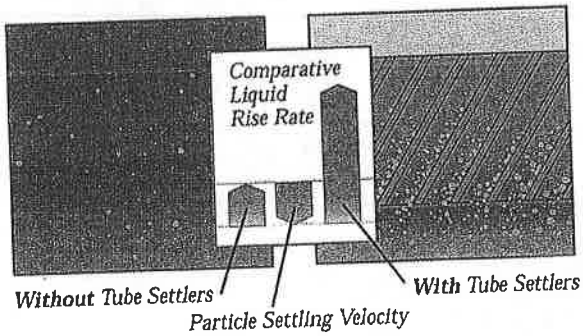

CONFIGURATIONS

For use in either circular or rectangular tanks, standard module sizes are 6, 8, 10, or 12 ft. lengths and 1 or 2 ft. widths. Other sizes available upon request. Available in both potable (blue) and non-potable (black).

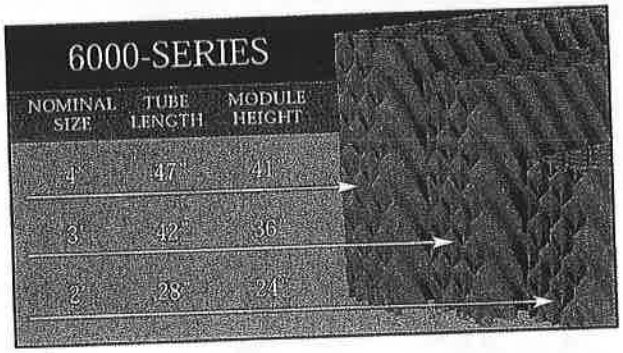

Brentwood also offers complete systems including supports, baffles, surface grating, troughs, and weirs as required for both municipal and industrial projects.

Non-metallic chain and flight sludge collection systems for rectangular clarifiers are available from our Polychem division.

NSF Certified to ANSI/NSF 61

STRUCTURAL INTEGRITY

The 6000-SeriesTube Settler modules are self-supporting and constructed of prime, rigid, UV-protected PVC. Integrated structural ribs provide substantial loading strength (maximum 250 lbs/ft²). The unique design assures a solid interface during installation. Brentwood's sheet forming and bonding processes ensure tremendous strength and long-term durability.

HIGH-TUBIDITY, HIGH RATE APPLICATIONS

3' and 4' IFR-6000 modules are particularly effective in high-turbidity, and higher rate applications

TUBE SETTLER MAXIMUM APPLICATION RATES

Flow (GPM): Required flow through the basin.

Area (FT²): Tube settler area within the basin.

Application Rate (AR): $\frac{GPM}{FT^2}$

IFR-6024 (2 ft.)	IFR-6036 (3 ft.)	IFR-6041 (4 ft.)
AR = ≤ 2.5	AR = ≤ 4.0	AR = ≤ 4.5

BRENTWOOD INDUSTRIES

Brentwood Industries, Inc.
Mailing Address P.O. Box 605, Reading, PA 19603, USA
Shipping Address 610 Morgantown Road, Reading, PA 19611
Phone 610.236.1100 *Fax* 610.736.1280
Email wwsales@brentw.com
Website www.BrentwoodProcess.com

© Brentwood Industries 2003

Printed 06/03

Tube Settler System Design

Tube Settler System design is based on these three criteria:

Flow (gpm): Required hydraulic flow capacity through the basin

Area (ft²): Plan area of tank for tube settlers.

Design Application Rate: Flow/Area (1.5 to 3.5 gpm/ft²)

Tube settlers handle maximum application rates from 2.5 to 4.5 gpm/ft². The recommended application rate for design purposes is 1.5 to 3.5 gpm/ft². This design application rate should be verified in accordance with local design standards for allowable flows, application rates, etc. Consideration of the influent water chemistry, settleability, and basin hydraulics should also play a role in selecting the proper application rate.

TUBE SETTLER	VERTICAL HEIGHT	TUBE LENGTH**	TYPICAL DESIGN APPLICATION RATE	EQUIVALENT SETTLING AREA
20"	20.00"	23.09"	1.50 gpm/ft²	10.3 ft²/ft
IFR-6024*	24.00"	27.71"	2.00 gpm/ft²***	12.3 ft²/ft
30"	30.00"	34.64"	2.50 gpm/ft²	15.4 ft²/ft
IFR-6036*	36.00"	41.57"	3.00 gpm/ft²	18.5 ft²/ft
40"	40.00"	46.19"	3.50 gpm/ft²	20.5 ft²/ft
IFR-6041*	41.00"	47.34"	3.50 gpm/ft²	21.0 ft²/ft

* Brentwood Tube Settlers
** Tube length is based on an angle of 60°
*** Some states are limited by the 10 States Standards application rate of 2.0 gpm/ft²

The top of the tube settler modules should be submerged approximately 18" to 30" below the water surface. To prevent high velocities and short circuiting of tubes, the velocities through the sedimentation basin should be verified. This can be calculated by dividing the flow through the tank (ft³/s) by the cross sectional area (height x width) perpendicular to flow under the tube settler area, where the height is the distance between the bottom of the tube settlers and the basin floor.

Basin Velocity = Flow (ft³/s) /Area (ft²) ≤ 0.05 fps

The velocities under the tube settler area generally should not be greater than 0.05 fps. To avoid problems with longitudinal velocity, either the tank width or height should be modified. If this is not feasible, consideration of decreasing the flow is an option. Note that this figure is a general guideline and, if the velocity is a concern, a more detailed hydraulic analysis should be performed. When designing the layout of tube settlers within a basin, care should be given to avoid installation near entrance areas where turbulence could impact the performance of the tubes. In a horizontal basin it is recommended that approximately one-third of the basin length should remain tube-free to act as a quiescent zone. Generally, this is easy to implement because the required area of tube settler coverage will occupy a smaller portion of the basin.

Support System Design

Tube settler module support systems should have a bearing surface of approximately 2". Bearing surfaces of more than 2" will cause blockage of the tubes that are in contact with the structural members. Supports less than 2" wide can create loading forces that could crush the modules and reduce their effectiveness. Tubular supporting structures are not recommended because they create point loads, which can severely damage the tube settlers.

The support system can be made of stainless steel, painted carbon steel, or aluminum.

Supports for the modules must be located a minimum of 1'-0" from the end of each module for modules less than 8'-0" in length and 1'-6" for modules greater than 8'-0" in length.

The support system must be designed with consideration of both live loads (human traffic) and dead loads (Dead loads include the weight of the PVC tube settlers, floc build-up, troughs, baffles, protective surface grating, etc.). The dry weight of PVC tube settlers is approximately 1.75 to 2.00 lbs/ft³. The support system should be designed in accordance with a maximum 8'-0" unsupported span of the tube settler. This design will support both dead and live loads with an adequate safety factor. Some manufacturers will design based on a 10'-0" unsupported span that limits operator access and can be potentially dangerous.

In rectangular tanks, the supports should span the full width of the tank. If this is not possible, intermediate support columns may be used. However, the support system should not impact any sludge-collecting device operations or other basin operations. Often concrete center columns are available for use in attachment of the tube settler support system.

Circular clarifiers can use supports that span from the outside diameter to the center well, creating pie shape tube settler areas. If complete coverage is not required for circular clarifiers, cantilevered support frames can be attached to the outer wall to provide the required coverage area.

Trough Design

Troughs and weirs for the tube settler system must be designed to handle peak flows and meet local regulatory requirements. Generally, a flow of 20,000 gpd per linear foot of weir (10 States Standards) is sufficient. Material of construction for troughs and weirs is commonly UV-inhibited, NSF-certified fiberglass or stainless steel. The layout of the troughs should be equally-spaced so flow distribution is realized throughout the tube settler area. A general rule of thumb is that trough spacing should not be more than four times the tube submergence.

Baffle Design

Baffles located at the tube settler/quiescent zone interface are required to direct water through the tube settlers area. They should be constructed of UV-inhibited fiberglass, PVC, or stainless steel. The design of the baffle system should be integrated with the support system.

Tube Settler Access

During basin design, consideration must be given to operator access for cleaning and for servicing of the effluent troughs/weirs, as required, within the tube settler area. Like any type of equipment, tube settlers will require periodic cleaning and maintenance and it is unreasonable to deny access for plant operators. A basin walkway design and/or a protective covering on the tube settlers should be provided to allow for a safe walking surface. A plastic or fiberglass grating is ideal because it not only allows access to the tubes, troughs, and weirs, but also adds a protective layer to the tube settlers. Any type of grating must be specifically designed not to hinder the tube settler performance and to be structurally sufficient without causing damage to the tube settlers.

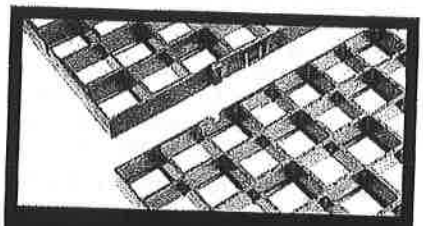

Brentwood AccuGrid® Protective Surface Grating

Brentwood has developed a unique, cost-effective means of providing additional protection to a tube settler system. Our potable-grade NSF-certified AccuGrid provides a protective layer from foot traffic and from the repeated hydraulic impact which occurs during routine wash-downs. The one-piece, interlocking panels are strong, lightweight, economical, and easy to install. AccuGrid protective surface grating will extend the useful life of the tube settlers by 2-3 times.

TUBE SETTLER DESIGN & APPLICATION

System Design Criteria

According to the technical review entitled *Tubular Settlers*[2], written by Mr. Roderick M. Willis in 1978, there are three basic requirements essential for successful performance of tube settlers.

1. There must be laminar (or viscous) flow conditions within the tubes at the maximum flow rate required. Laminar flow is essential so that each slowly-settling floc particle within a tube maintains a steady descent to the collecting surface of the tube and is not intermittently swept upward by turbulent currents within the tube.

2. The residence time within each tube must be ample so that a floc particle entering at the extreme upper edge of the tube will have sufficient time to settle to the collecting surface a vertical distance below. (Once the particle reaches the collecting surface, the coalescing tendency between particles creates a steady sludge formation).

3. The velocity of flow through the tubes must not exceed a critical maximum that would cause the settled sludge to lose stability and be swept out of the tube in the direction of normal flow. As a corollary, the volume of the tube must be ample to allow either accumulation or a continual discharge backward of all sludge, without critically changing the normal flow rate through the tube

Size, Shape, and Configuration

In addition to system design criteria, size, shape, and configuration need to be evaluated when choosing a tube settler module design. The vertical settling height within a tube should be kept as short as possible, within the restraints of cost and plugging potential, to minimize the settling distance for the particles. A V-groove base should be provided to allow for the rapid accumulation of solids into a compact mass, which slides continuously down the tube.

When selecting a tube settler, careful consideration should also be given to the vertical height of the modules. There are several different size tube settlers, each having a specific application rate. *(See chart under System Design for more info.)* Tube settlers with a vertical height of 24" and a tube length of 28" are the most commonly used size. 3' and 4' tube heights, because of longer residence time, are advantageous in many applications as well, such as high flow/high turbidity applications and where existing basins need improved settling capabilities to increase the plants total capacity.

Tube settlers manufactured with the tubes aligned in the same direction avoid the formation of crossing points that crossflow tubes promote. Many manufacturers compromise tube settler flow-through with "criss-crossing" tubes in order to achieve module rigidity. Crossing points can re-suspend the floc particles, affecting process performance. Tube modules that have flow in only one direction are easier to clean and have less chance for plugging, particularly where ends of modules meet.

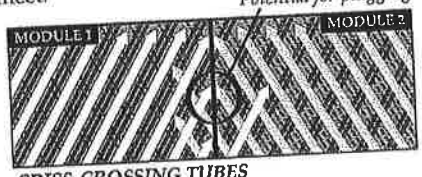

CRISS-CROSSING TUBES

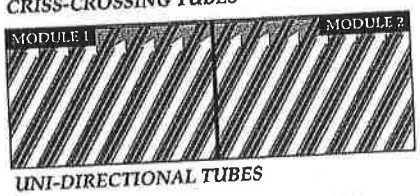

UNI-DIRECTIONAL TUBES

Also, the tube module design should incorporate features that would prevent gaps along the installed modules. These gaps allow short-circuiting of unclarified water to pass around the tube settlers. A module design which allows nesting with adjacent modules is ideal because it maximizes available area and increases the total module strength.

Tube Settlers vs. Plate Settlers

Plate settlers (Lamella Plates) are often compared to tube settlers when evaluating options for upgrading plants. They are more expensive than tube settlers because of the material of construction, and the wide plates in operation tend to be hydraulically unstable. Tube settlers eliminate crossflows and eddy currents and allow for the use of corrosion-resistant, lighter-weight PVC, resulting in a 50% cost savings. Tube settlers are a common, economically-viable alternative/solution to parallel plates (plate settlers).

Material of Construction

Tube settler modules should be constructed of evenly-spaced sheets of PVC which are solvent-welded to form a durable bond between sheets and channels. The PVC material is inert and resistant to deterioration from naturally-occurring constituents in water or wastewater.

Material and finished modules to be used for potable water treatment plant should be Certified to ANSI/NSF-61 Standard for drinking water.

NSF Certified to ANSI/NSF 61

Any material used for either water or wastewater should include an ultraviolet radiation inhibitor.

Some tube settler modules are constructed of ABS, which is a highly flammable material. A spark from welding, drilling, or a cigarette, etc. could ignite the ABS tube settlers, causing injury to personnel and damage to the tube settlers and surrounding structures.

PVC modules (unlike ABS and other materials) have a specific gravity considerably greater than water and will not float. ABS modules have a specific gravity only slightly higher than water and require a tie-down system. This results in greater costs for material and installation. A tube settler module constructed of PVC will not require any hold-down system or clips.

The mechanical properties of PVC exceed those of ABS, resulting in a more structurally sound installation. The most important mechanical property of PVC, flexural modulus, is 30% greater then that of ABS. PVC is denser, has greater tensile strength, higher impact strength, and is much less flammable then ABS.

"The Paducah WTP increased their total plant capacity by 4.0 MGD (12.0 MGD to 16.0 MGD) by replacing their existing 20" high tube settlers with new, extended tube settlers having a vertical height of 36". This allowed the plant to meet the increased demand without building a new settling basin, saving the City of Paducah hundreds of thousands of dollars."

Comparison of Physical and Mechanical Properties of PVC and ABS

PROPERTY	TEST METHOD	PVC	ABS
Specific Gravity	D792	1.45 gram/cm³ max.	1.06 gram/cm³ max.
Tensile Strength	D638/D882	6,000 psi min.	5,100 psi min.
Flexural Modulus	D790	425,000 psi min.	300,000 psi min.
Flexural Strength	D790	11,000 psi min.	8,500 psi min.
Impact Strength	D256	10.0 ft-lbs/in min.	6.3 ft-lbs/in min.
Heat Deflection	D648	158°F @ 264 psi min.	180°F @ 264 psi min.
Flammability	UL94	Grade Count = 22 (self-extinguishing)	Grade Count = 135 (extremely flammable)

[2] Willis, R.M. *Tubular Settlers-A Technical Review, Journal AWWA*, 331:335 (June 1978)

Tube Settlers

Tube settlers and parallel plates increase the settling capacity of circular clarifiers and/or rectangular sedimentation basins by reducing the vertical distance a floc particle must settle before agglomerating to form larger particles.

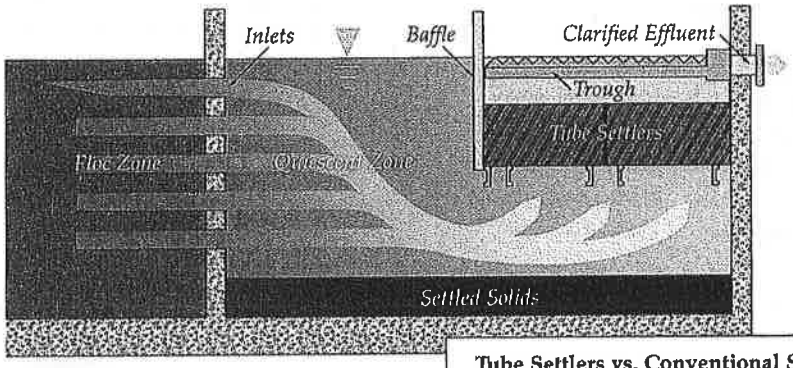

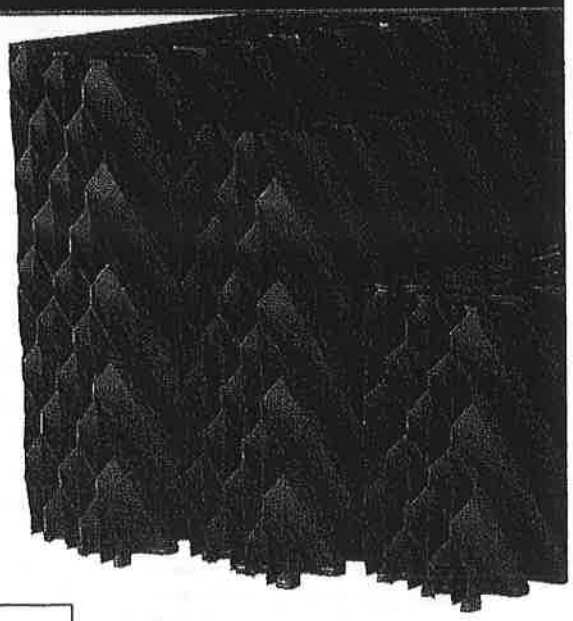

Tube settlers use multiple tubular channels sloped at an angle of 60° and adjacent to each other, which combine to form an increased effective settling area. This provides for a particle settling depth that is significantly less than the settling depth of a conventional clarifier, reducing settling times.

Tube settlers capture the settleable fine floc that escapes the clarification zone beneath the tube settlers and allows the larger floc to travel to the tank bottom in a more settleable form. The tube settler's channel collects solids into a compact mass which promotes the solids to slide down the tube channel.

Why Tube Settlers?

Tube settlers offer an inexpensive method of upgrading existing water treatment plant clarifiers and sedimentation basins to improve performance. They can also reduce the tankage/footprint required in new installations or improve the performance of existing settling basins by reducing the solids loading on downstream filters.

Made of lightweight PVC, tube settlers can be easily supported with minimal structures that often incorporate the effluent trough supports. They are available in a variety of module sizes and tube lengths to fit any tank geometry, with custom design and engineering offered by the manufacturer.

Tube Settlers vs. Conventional Settling

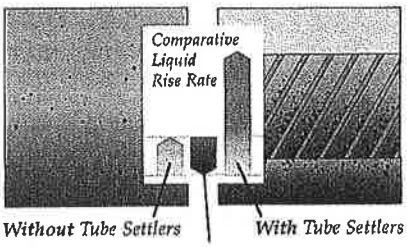

Advantages of Tube Settlers

The advantages of tube settlers can be applied to new or existing clarifiers/basins of any size:

- Clarifiers/basins equipped with tube settlers can operate at 2 to 4 times the normal rate of clarifiers/basins without tube settlers.
- It is possible to cut coagulant dosage by up to half while maintaining a lower influent turbidity to the treatment plant filters.
- Less filter backwashing equates to significant operating cost savings for both water and electricity.
- New installations using tube settlers can be designed smaller because of increased flow capability.

"Clarifiers equipped with tube settlers can operate at 2 to 4 times the normal rate of clarifiers without tube settlers."

- Flow of existing water treatment plants can be increased through the addition of tube settlers.
- Tube settlers increase allowable flow capacity by expanding settling capacity and increasing the solids removal rate in settling tanks.

"The City of Westminster, CO used alum as their water treatment plant flocculant. After the installation of tube settlers, they cut the alum dosage from 30 ppm to 16 ppm, and the filter influent turbidity was still decreased by 25%. Since the filter influent turbidity had decreased, this enabled a savings of over 27% water used for filter backwashing[1]."

[1] *Innovative Plant Operations Yield Bonuses, Opflow,* Vol. 6 No. 10 (Oct. 1980)

BRENTWOOD INDUSTRIES

Document 1.2 © October 2005

Water Technology Group

WHY BRENTWOOD TUBE SETTLERS?

Brentwood provides complete engineered systems, including tube settlers, supports, baffles, troughs & weirs, and protective surface grating. The advantages of a Brentwood installation are:

- **Single source responsibility.** Avoid problems with coordination of engineering, installation, and pricing of different components.
- **Save money** by purchasing an economical packaged system.
- **Exclusive products and features** like AccuGrid Protective Surface Grating and integrated structural ribs provide unique benefits to the tube settler system.
- **Extensive engineering experience** in both plastics design and water treatment technologies are utilized in every system design.

Project Customization

Brentwood tube settler modules can be "custom fit" for either rectangular or circular tanks. Standard lengths available are 6', 8', 10', or 12', with standard widths of 1' or 2'. Other sizes are available upon request.

Every tube settler system is different due to project requirements, tank configuration, etc. Please contact us to provide detailed budget pricing, schematic system layouts, and specifications for your particular system design.

Project Pricing

The following case studies are representative of Brentwood's economic performance within the water industry. The figures shown, adjusted for inflation, are from actual projects. System budget prices will vary considerably based on structural requirements and the scope of the project.

CASE STUDY #1:

IFR-6024 System vs. Plate Settler System

8 basins, 20'x52' tube settler area, Project allowed cost add for plate settler system.

Plate Settler System	Bid Cost = $1,000,000
IFR-6024 System	**Bid Cost = $400,000**

CASE STUDY #2:

Retrofit w/Tubes vs. Build New Basin

2 basins, 17'x32' tube setter area.

New Tank Cost*	Budget Cost = $300,000
IFR-6036 System	**Budget Cost = $95,100**

CASE STUDY #3:

New Tank w/o Tubes vs. w/Tubes

1 basin 20'x50' without Tubes,
1 basin 15'x30' with Tubes

Without Tubes*	Budget Cost = $375,000
IFR-6041 System	**Budget Cost = $250,000**

Does not include new inlet piping, flocculation chamber, troughs, weirs, outlet piping. Includes only site grading, excavation, concrete tank

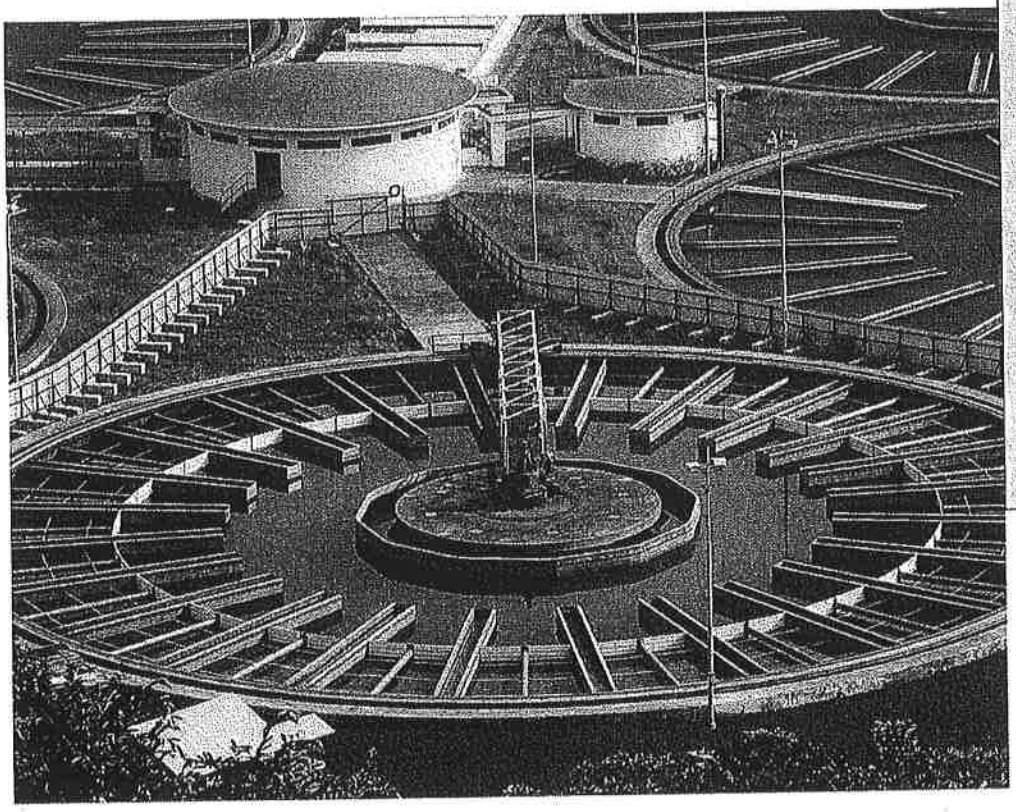

The City of Myrtle Beach Surface Water Treatment Facility has 5 settling tanks, each with an original design flow capacity of 5 MGD. Each tank is 60' wide x 120' long x 15.5' deep, divided into three 20' passes.

The sedimentation process was a major component that needed to be upgraded or expanded to increase the plant's rated capacity to meet current and future flow predictions. Enhanced settling was required because the 4-hour detention time was not being met at 30 MGD. After reviewing all available options, the City of Myrtle Beach SWTF decided to purchase and install Brentwood IFR-6024 Tube Settlers in each of the 5 settling basins.

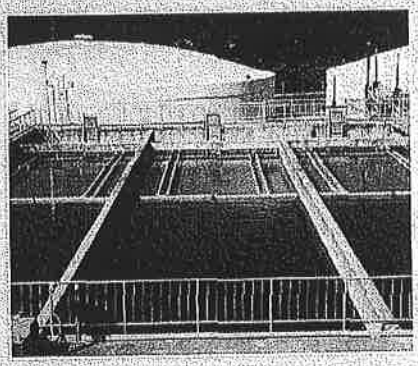

"After less than a year in operation, our Brentwood Tube Settler System:

- *Increased our flow capability (approved plant capacity) from 30 to 40 MGD*
- *Contributed significantly to historically-low settled water turbidity*
- *Reduced chemical coagulant usage*
- *Improved overall filter performance*
- *Allowed us to reduce the state Dept. of Health and Environmental Control (DHEC) mandated basin retention times from 4 hours to approximately 2.5 hours*
- *Allowed greater operating flexibility for the plant staff"*

Sam Scialdone
Plant Superintendent

BRENTWOOD INDUSTRIES

610 Morgantown Road, Reading, PA 19611
Phone 610.236.1100
Fax 610.736.1280
Email wwsales@brentw.com
Website BrentwoodProcess.com

AMT
A Subsidiary of The Gorman-Rupp Company ™

NEW FOR 2007
90° ROTATABLE BASE ON ALL MODELS

Self-Priming Diaphragm Pumps

- ***Sand Cast Aluminum Construction for Portability and Durability***
- ***Thermoplastic Rubber Diaphragm***
- ***2" to 3" NPT Suction and Discharge Sizes***
- ***1-5/8" Diameter Solids Handling Capability***
- ***Modular Component Design Permits Easy Maintenance and Cleanout***
- ***Engine Driven Models: Choice of Honda and Briggs & Stratton Gas or Yanmar Diesel Engines***
- ***Delivers up to 90 GPM***
- ***Maximum Temperature 180°F***

The AMT line of 2" and 3" Diaphragm pumps features 2-stage, 44 to 1 gear reduction with a large diameter output gear and heavy duty ball bearing construction. Often referred to as Mud Pumps or Sludge Pumps, diaphragm pumps are designed to pump mud, slurry, sewage, and thick liquids that have the ability to flow. AMT Diaphragm pumps are available with a choice of drivers to meet your application requirements: Briggs & Stratton or Honda gasoline engines, Yanmar Diesel, and 115 VAC electric motor with weatherproof cord and switch. Built-in molded polyurethane flapper/check valve assures self-priming to 20 ft. after initial prime. Heavy duty gear box is designed to operate pumps at 40 strokes per minute for Electric Motor Models and 60 strokes per minute for Engine-Driven Models. Each unit includes a 2" or 3" NPT steel suction strainer, two NPT nipples, and a wheel kit with 10" semi-pneumatic transport wheels for portability. Models 336E-K6, 336G-K6, 335G-K6, and 335E-K6, are kits provided less motor or engine. Pumps are designed for use with non-flammable liquids which are compatible with pump component materials. ***Suction and discharge port size cannot be reduced.***

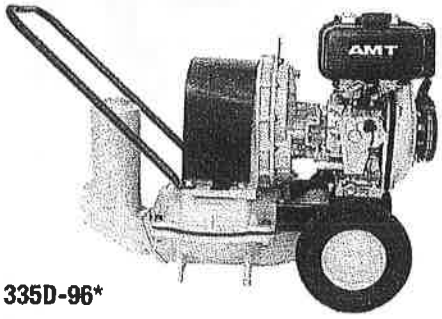

Model 335D-96*

*shown with 90° rotatable base

INDUSTRIAL DUTY

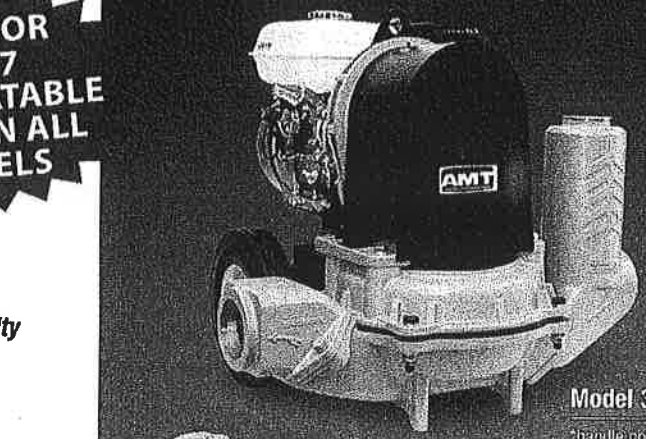

Model 335H-96*
*handle not shown

Model 335E-96

Performance of 2" Diaphragm Pumps

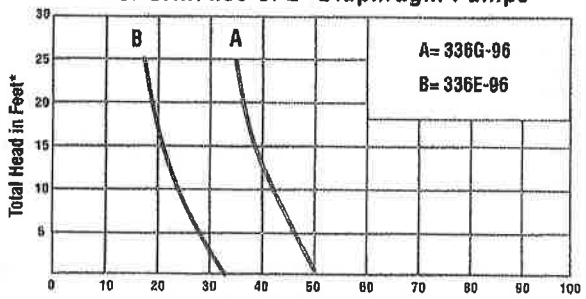

* Convert to PSI, divide by 2.31 Liquid-Water specific gravity 1.0

Performance of 3" Diaphragm Pumps

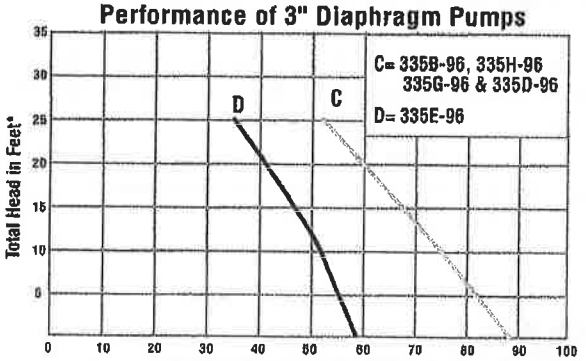

* Convert to PSI, divide by 2.31 Liquid-Water specific gravity 1.0

Diaphragm Pumps

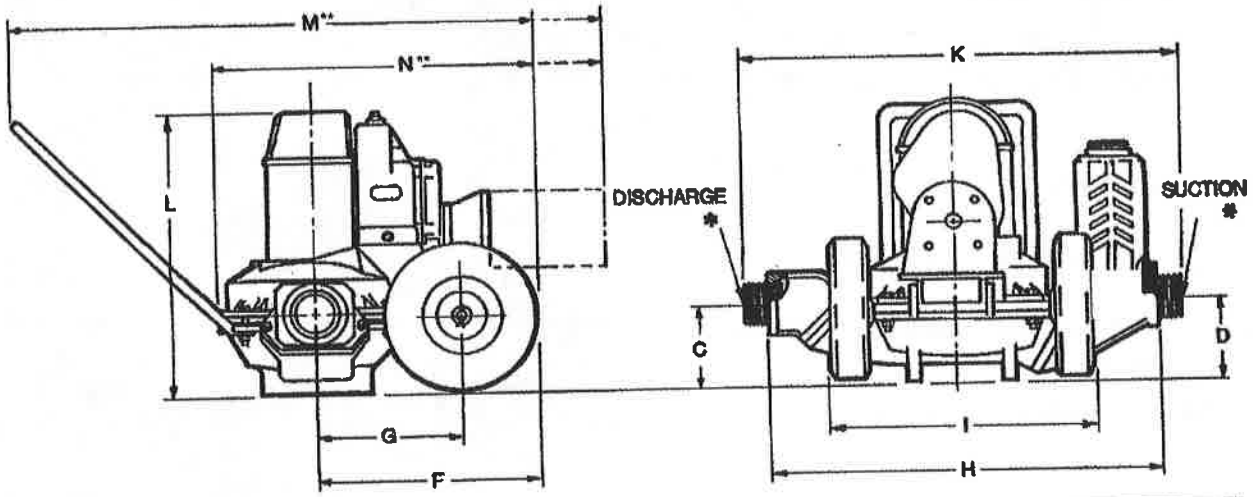

Model #	Curve	Driver	SUC*	DIS*	C	D	F	G	H	I	K	L	M**	N**	Shpg. Wt.
336G-96	A	HONDA GX120	2"	2"	7.3	5.6	17.8	12.8	22.2	18.1	25.7	23.2	39.2	25.0	125 lbs.
336E-96	B	1.5 HP Elec. Motor	2"	2"	7.3	5.6	17.8	12.8	22.2	18.1	25.7	23.2	41.1	26.8	131 lbs.
335G-96	C	HONDA GX120	3"	3"	6.2	6.3	14.5	9.5	26.5	17.9	30.0	22.0	42.0	46.0	175 lbs.
335E-96	D	1.5 HP Elec. Motor	3"	3"	6.2	6.3	14.5	9.5	26.5	17.9	30.0	22.0	43.5	27.5	186 lbs.
335B-96	C	B&S CP550	3"	3"	6.2	6.3	14.5	9.5	26.5	17.9	30.0	22.0	41.5	25.5	181 lbs.
335H-96	C	HONDA GX160	3"	3"	6.2	6.3	14.5	9.5	26.5	17.9	30.0	22.0	41.5	25.5	182 lbs.
335D-96	C	YANMAR DIESEL L48	3"	3"	6.2	6.3	14.5	9.5	26.5	17.9	30.0	22.0	43.0	27.0	203 lbs.
336G-K6	A	Kit, Less Engine	2"	2"	7.3	5.6	17.8	12.8	22.2	18.1	25.7	23.2	N/A	N/A	95 lbs.
336E-K6	B	Kit, Less Motor	2"	2"	7.3	5.6	17.8	12.8	22.2	18.1	25.7	23.2	N/A	N/A	95 lbs.
335G-K6	C	Kit, Less Engine	3"	3"	6.2	6.3	14.5	9.5	26.5	17.9	30.0	22.0	N/A	N/A	146 lbs.
335E-K6	D	Kit, Less Motor	3"	3"	6.2	6.3	14.5	9.5	26.5	17.9	30.0	22.0	N/A	N/A	146 lbs.

(*) Standard NPT (female) pipe thread.
(**) This dimension may vary due to motor or engine manufacturer's specifications.
NOTE: Dimensions have a tolerance of ±1/8".

Standard Features for AMT Diaphram Pumps

- Engine Driven Models - Choice of Honda, Briggs & Stratton Gas or Yanmar Diesel Engines
- 2" to 3" NPT Port Sizes
- Models 336E-96/335E-96 – 1.5 HP single phase, 115/230 Volt motor with manual reset overload includes 20 foot 115 VAC power cord and weather-proof on/off switch
- Models 336G-K6/335G-K6 – Kit, furnished less engine. For use with gasoline or diesel engines with .75" keyed shaft (SAE J609a Mounting Flange)
- Model 336E-K6/335E-K6 – Kit, furnished less motor. For use with electric motor (1725 RPM) or air motor with a minimum of 1.5 HP. 56C Mounting Flange required.

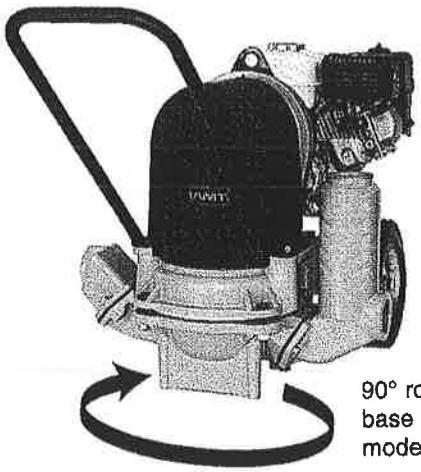

90° rotatable base on all models

OFF THE SHELF PUMPS

WARNING: Do not use in explosive atmosphere or for pumping volatile flammable liquids.

See price book page 13

The Gorman-Rupp Company reserves the right to discontinue any model or change specifications at any time without incurring any obligation.

PROPRIETARY DATA

PROPERTY OF DEN HARTOG INDUSTRIES, INC. INFORMATION FURNISHED HEREIN IS THE PROPERTY OF DEN HARTOG INDUSTRIES, INC. AND SHALL NOT BE USED, DISCLOSED TO OTHERS, OR COPIED WITHOUT THE EXPRESSED WRITTEN CONSENT OF DEN HARTOG INDUSTRIES, INC. ALL RIGHTS RESERVED.

CB2600-86 C

1. SPECIFIC GRAVITY IS 1.75
2. 1 PIECE ROTATIONALLY MOLDED
3. TRANSLUCENT
4. FDA APPROVED RESIN
5. CALIBRATED IN GALLONS
6. THREE YEAR WARRANTY
7. UV STABILIZED
8. MIXER OR PUMP MOUNT ON REQUEST

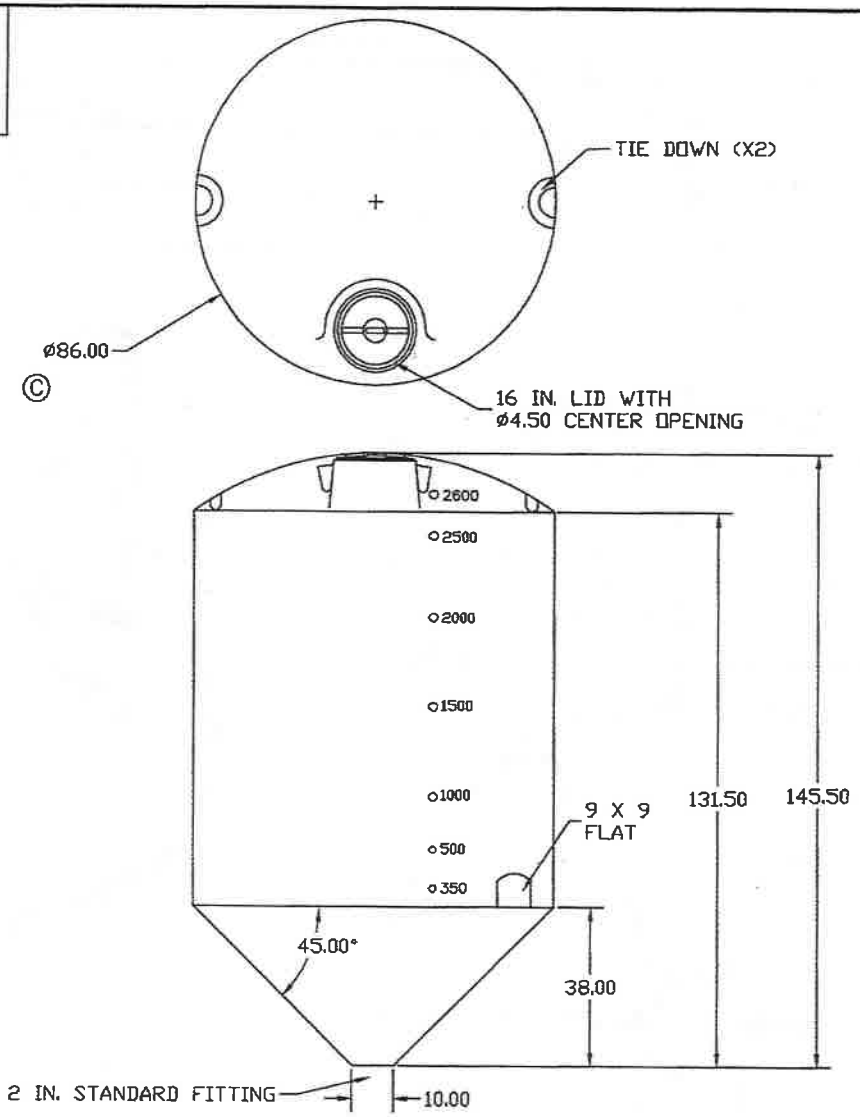

REV	DESCRIPTION	DATE	APPRD
C	DIAMETER WAS 85	7/31/06	NVE
B	UPDATED DIMENSIONS	7/13/06	NVE
A	ISOLATED TANK AND STAND	6/13/06	NVE

DRAWN / DATE
DHJ 12/9/93

APPRD. / DATE

ALL DIMENSIONS ARE IN DECIMAL INCHES
TOLERANCES UNLESS OTHERWISE SPECIFIED
± 1% @ 68° F

THIRD ANGLE PROJECTION
ANSI 14.5M

MATERIAL

HDPE OR EQUIVALENT
REFERENCE MATERIAL DATA SHEET FOR SPECIFIC PROPERTIES.

NOTES:
1. NOM. WALL @ 0.369
2. SHOT WEIGHT 500 LBS.

ACE ROTO-MOLD
A DIVISION OF DEN HARTOG INDUSTRIES, INC.
4018 HWY. 60 BLVD, BOX 421, HOSPERS, IOWA 51238

CLIENT / DESCRIPTION
2600 Gallon ø86 CONE BOTTOM TANK

SCALE
N.S.

PART NO.
CB2600-86

PROPRIETARY DATA

PROPERTY OF DEN HARTOG INDUSTRIES, INC. INFORMATION FURNISHED HEREIN IS THE PROPERTY OF DEN HARTOG INDUSTRIES, INC. AND SHALL NOT BE USED, DISCLOSED TO OTHERS, OR COPIED WITHOUT THE EXPRESSED WRITTEN CONSENT OF DEN HARTOG INDUSTRIES, INC. ALL RIGHTS RESERVED.

CB086-45ST

C

KEY	PART NUMBER	DESCRIPTION	QTY.
1	A01250X15000	1/8 X 1 1/2 ANGLE	200 IN
2	B02500X30000	1/4 X 3 FLAT	306 IN (6 @ 51)
3	B03750X20000	3/8 X 2 FLAT	288 IN (6 @ 48)
4	C03X4.1	3" CHANNEL	576 IN
5	P10000	1" PIPE	217.5 IN (6 @ 36.25)
6	S-14GA	14 GA SHEET	9999 SI, (3 @ 48 X 88)
7	SJCB86/90ST-1	12" CB RING STAND	1
8	SJCB86/90ST-7	1/4 X 4 X 4 LEG PAD	6
9	T1000X01090	1 OD X .109 TUBING	241.5 IN (6 @ 40.25)

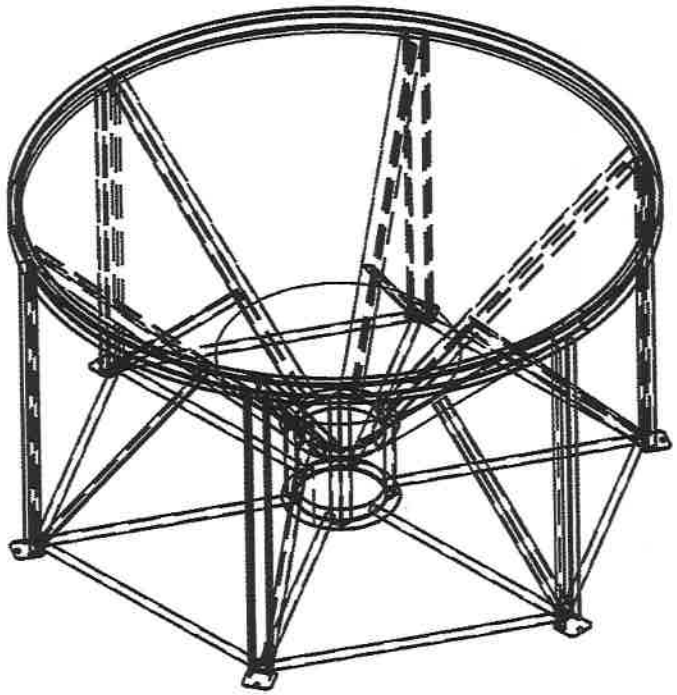

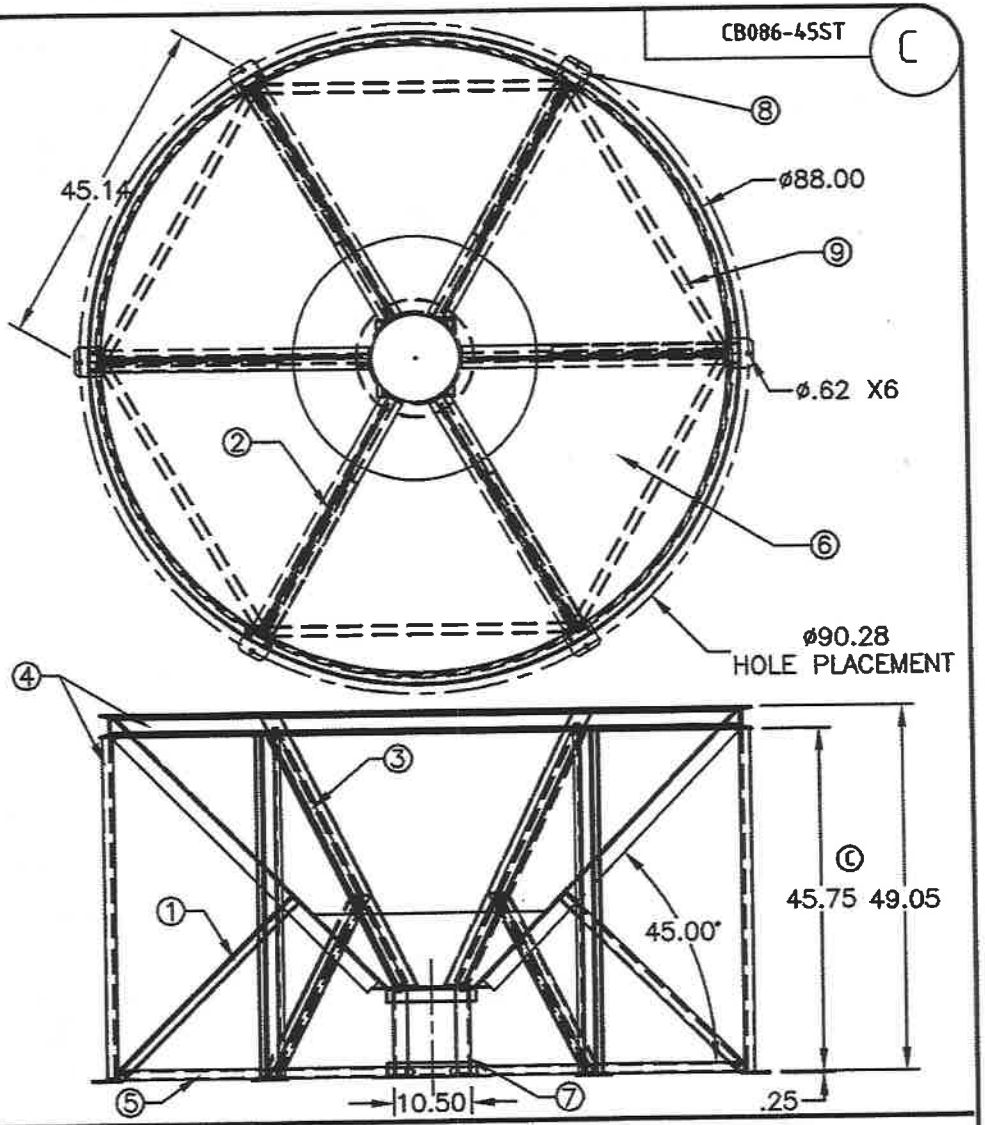

REV	DESCRIPTION	DATE	APPRD
C	WAS 46.00	12/27/06	
B	PN WAS CB085-45ST	7/31/06	NVE
A	ADDED B.O.M.	6/9/06	NVE

ALL DIMENSIONS ARE IN DECIMAL INCHES
TOLERANCES UNLESS OTHERWISE SPECIFIED
± 0.25

DRAWN / DATE: NVE 7/1/05

APPRD. / DATE: DHJ 10/14/05

THIRD ANGLE PROJECTION ANSI 14.5M

MATERIAL: MILD STEEL

NOTES:
1. POWDER COATED - BLACK COLOR
2. WEIGHT 580 LBS.

ACE ROTO-MOLD
A DIVISION OF DEN HARTOG INDUSTRIES, INC.
4010 HWY. 60 BLVD., BOX 425, HOSPERS, IOWA 51238

CLIENT / DESCRIPTION: STAND FOR ø86.00 45° CONE BOTTOM TANKS

SCALE: N.S.

PART NO.: CB086-45ST

T:\Cad Files\Revisions - STANDARD DRAWINGS\EQUIPMENT SPECIFICATION\PUMPS\ST-0048-SPC Rev-A Duplex 25 Hp Pump Skid.dwg

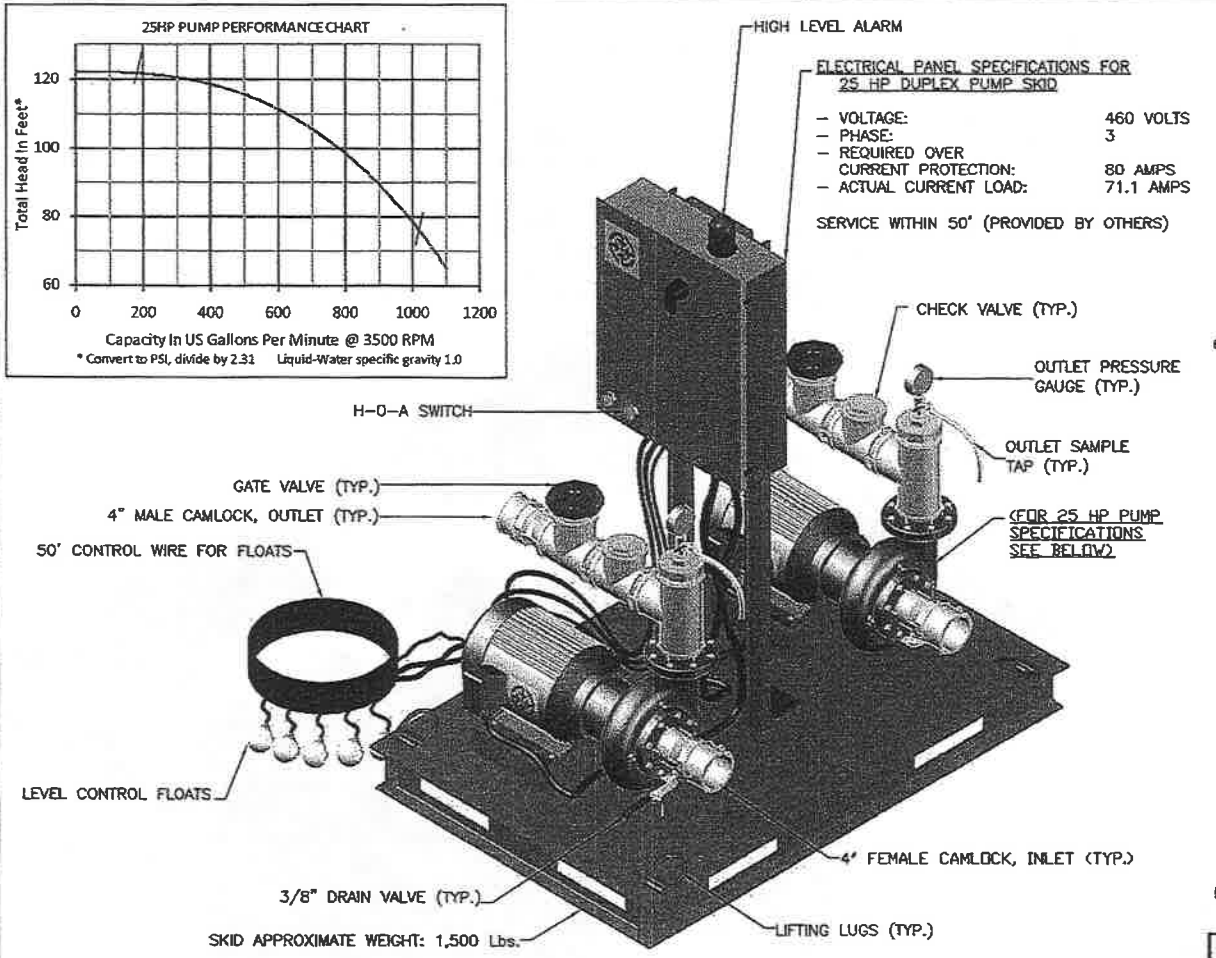

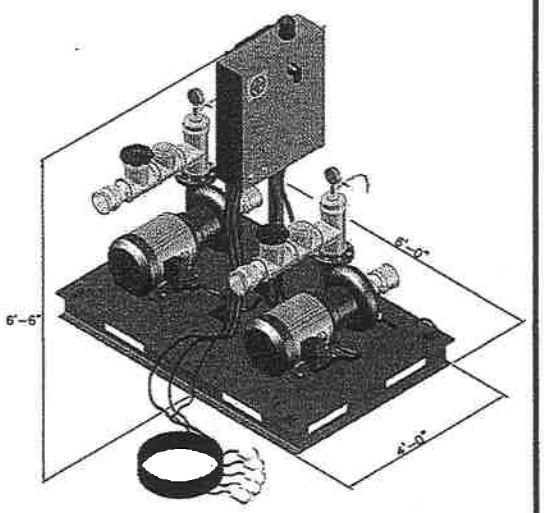

NOTE: THIS DRAWING DEPICTS A "TYPICAL" SKID.
ACTUAL DETAILS AND DIMENSIONS MAY VARY.

25 HP PUMP MECHANICAL/ELECTRICAL SPECIFICATIONS

– TYPICAL CAPACITY AND HEAD:	750 GPM @ 100' TDH
– CONSTRUCTION:	STAINLESS STEEL
– MAXIMUM HEAD:	120 ft.
– MAXIMUM FLOW:	1000 GPM
– FRAME:	256TCZ
– ENCLOSURE:	TEFC
– SUCTION:	4" FLANGE
– DISCHARGE:	4" FLANGE
– PUMP WEIGHT:	400 Lbs.
– IMPELLER DIAMETER:	6"
– DRIVER:	60 Hz 2 POLE 3500 RPM

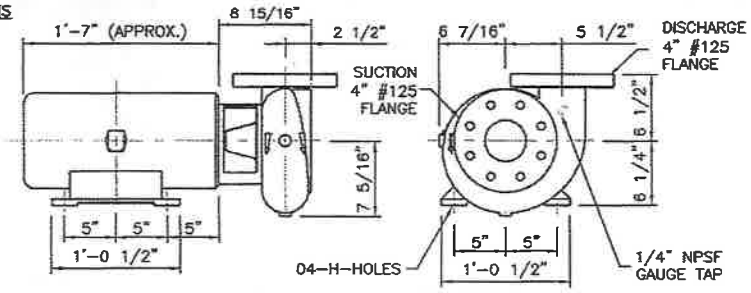

NO.	REVISIONS	DATE
A	TYPICAL	01/14/09

DUPLEX 25 Hp PUMP SKID STANDARD EQUIPMENT SPECIFICATION

SCALE: NTS	APPROVED BY: JB	DRAWN BY: AAV	
DATE: 01/14/09			

GROUND/WATER TREATMENT & TECHNOLOGY
P.O. BOX 1174
DENVILLE, NJ 07834

THIS DRAWING IS THE PROPERTY OF GROUND/WATER TREATMENT & TECHNOLOGY, INC

DWG SIZE: A	SHEET: 1 OF 1	DRAWING NUMBER: ST-0048-SPC	A

T:\Cad Files\Rentals - STANDARD DRAWINGS\EQUIPMENT SPECIFICATION\BAG FILTERS\ST-0020-SPC Rev-C Triplex Six Bag Filter Skid.dwg

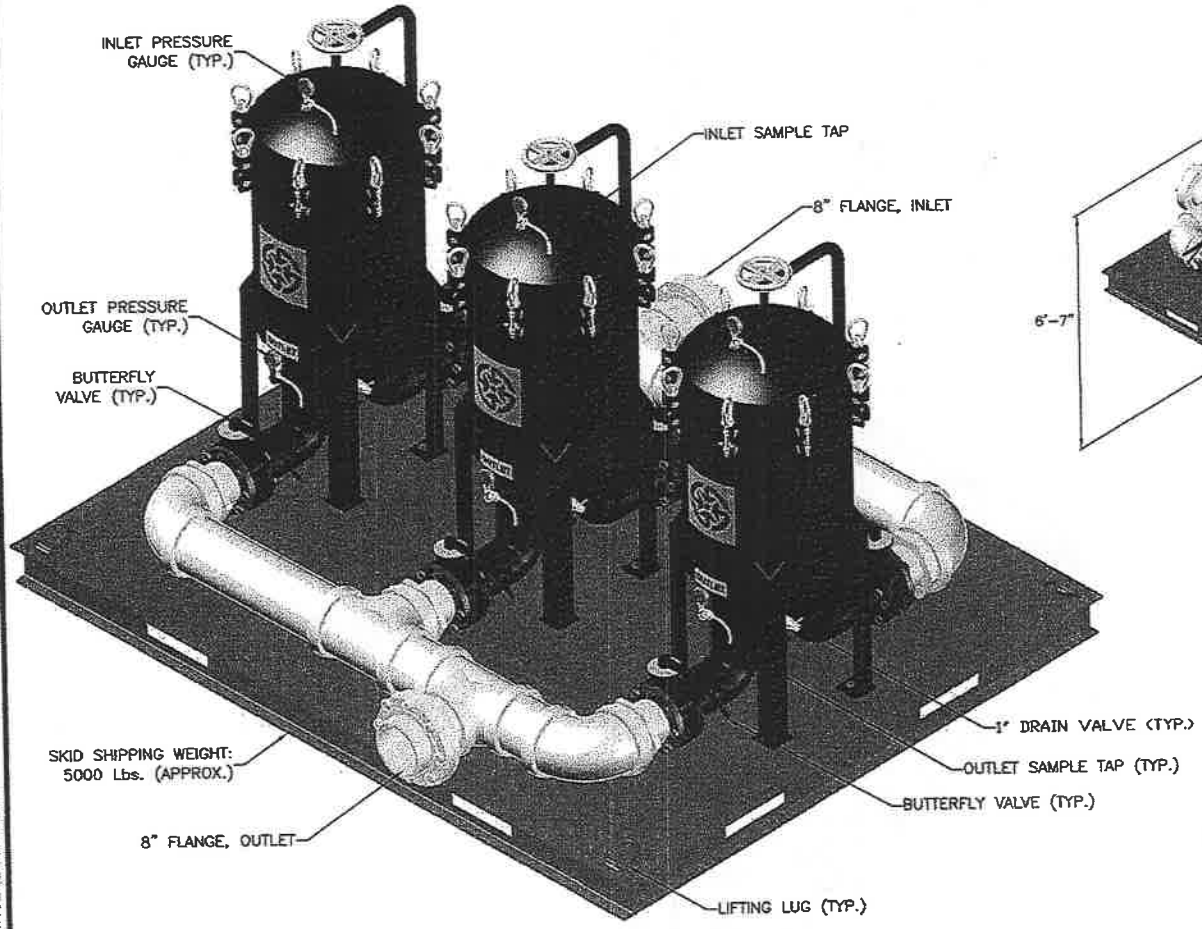

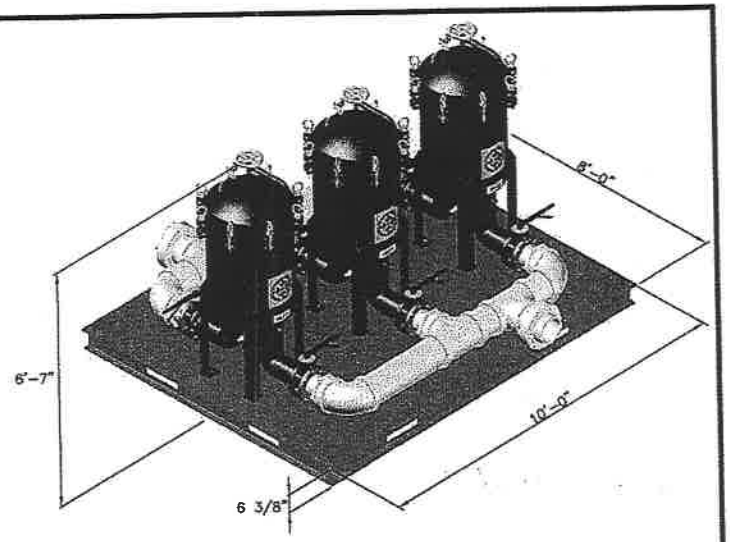

NOTE: THIS DRAWING DEPICTS A "TYPICAL" SKID. ACTUAL DETAILS AND DIMENSIONS MAY VARY.

PRESSURE DROP

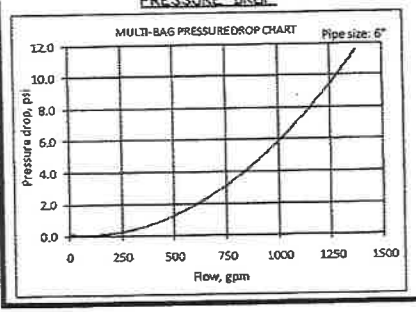

MULTI-BAG FILTER SPECIFICATIONS

- CONSTRUCTION:	CARBON STEEL
- HOUSING STYLE:	STANDARD
- NUMBER OF BASKETS:	6
- STRAINING FILTERING AREA:	26.4 SQR. FT.
- INLET/OUTLET SIZE:	6"
- NOMINAL FLOW RATE:	600
- STANDARD PRESSURE:	150 PSI
- WEIGHT (PER DRY UNIT):	750 Lbs.

BASIC DIMENSIONS

MODEL NUMBER & A: 24"
LEG BOLT CIRCLE: ø22.0"

B: 6"	C:15.0"
D: 50.7"	E: 69.7"
F: 7.00"	G: 20.1"

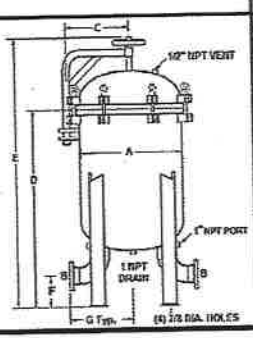

NO.	REVISIONS	DATE
C	ADDED SKID WEIGHT	02/18/09

TRIPLEX SIX BAG FILTER SKID STANDARD EQUIPMENT SPECIFICATION

SCALE: NTS	APPROVED BY: JB	DRAWN BY: AAW	
DATE: 07/17/08			

GROUND/WATER TREATMENT & TECHNOLOGY
P.O. BOX 1174
DENVILLE, NJ 07834

THIS DRAWING IS THE PROPERTY OF GROUND/WATER TREATMENT & TECHNOLOGY, INC

DWG SIZE: A	SHEET: 1 OF 1	DRAWING NUMBER: ST-0020-SPC	C

Rosedale Filter Media

Rosedale has a wide selection of filter media available to help solve your filtration problems. Our product offerings include filter bags, filter cartridges, and perforated strainer baskets. This selection features a variety of options from low-cost, disposable filter media; through high-performance filter cartridge; to cleanable stainless steel elements.

The filtration efficiency values specified in our data (see Element Performance Chart on page 123), are the indication of the filter's performance. Unlike many manufacturers, Rosedale publishes the filtration efficiency and dirt capacity of our media, providing all the information needed for an accurate sizing of a filter.

Our media is offered in standard grades and high efficiency. Standard grade refers to products which are nominally rated. This means there is no specified efficiency at the micron size but the product is interchangeable with industry standards. Rosedale high efficiency filter media is rated 95%, 99%, or 99.98% efficient at the specified micron level.

Nominal Rating	Absolute Rating (95% Efficiency)
1	35
3	35
5	48
10	55
15	65
25	70
50	90
75	110
100	110

Bag or cartridge filters are usually selected so that the clean pressure drop does not exceed 2 psi. Change-out is recommended at 15 psid (for bags), and 30 psid (for cartridges). Higher pressure drops may be tolerated when contaminant loading is low.

A more comprehensive chart on page 123 details each product group with corresponding efficiency and micron rating.

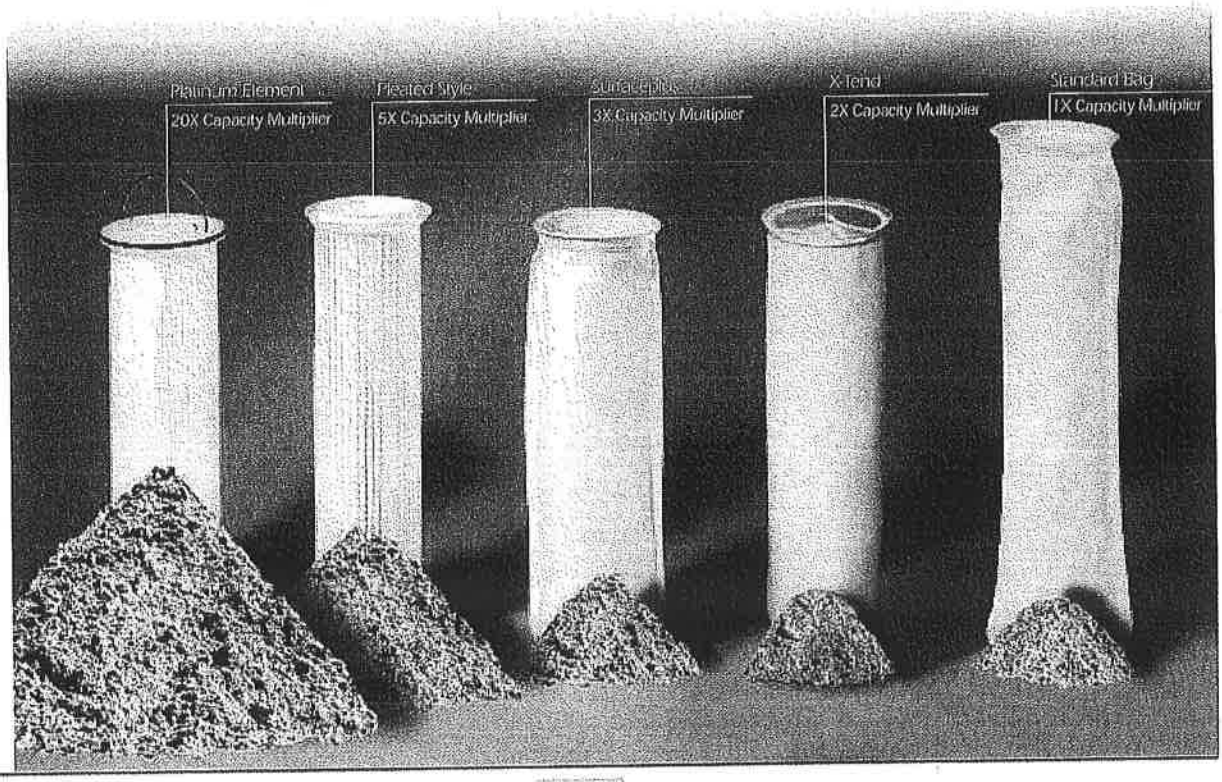

High Capacity Filter Bags for Rosedale Bag Filters

Fits All Rosedale Filter Housings

Construction

Felt Bags-Standard Grade

Felt construction is generally chosen where smaller particle retention is required, in the nominal 1 to 100 micron range. It offers higher solids loading capacity than mesh. General-purpose felt bags are offered in polyester and polypropylene materials. Special-purpose felt bags are offered in polyester and polypropylene materials. Special-purpose felt bags include high temperature service (to 500°F) bags of Nomex® nylon or Teflon®.

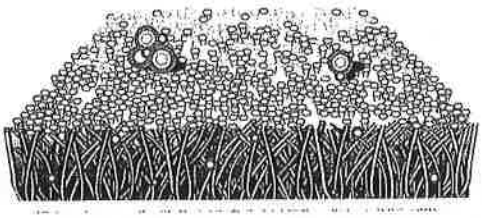

Mesh Bags

Mesh is a woven construction, generally used where micron ratings of 50 to 800 are required.

Two types are offered. The **multifilament** mesh is a low cost, disposable material offered in polyester. **Monofilament** mesh has higher strength, and is available in nylon. (It should be considered cleanable.)

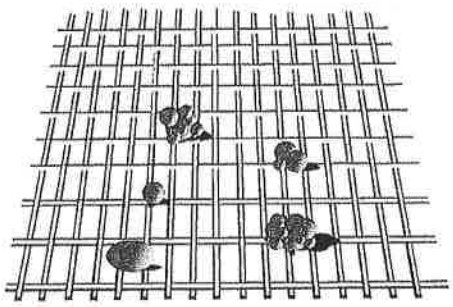

Oil Adsorption Bags

For removal of free oil, bags made of polypropylene microfibers, known as oil-adsorb, are available. A size 2 oil-adsorb bag will remove approximately a half-pound of oil from a water-oil liquid. It is only available with a 25 micron rating. If finer filtration is needed in an oil removal task, or high volume oil removal is required, Rosedale's Sorbent Containment Systems are available and information is located on page 101.

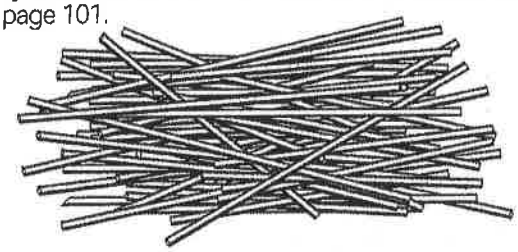

Melt Blown Media (Microfiber)

Polypropylene melt blown media offers unparalleled adsorption capacity for the removal of hydrocarbon contaminates from liquid streams. The melt blown media is also the heart of the high efficiency filter bag. The small diameter fibers create the bag's ability to remove fine particulate at high efficiencies. Fiber diameter is important because the pore size is a function of fiber diameter, density of fibers, and thickness of materials.

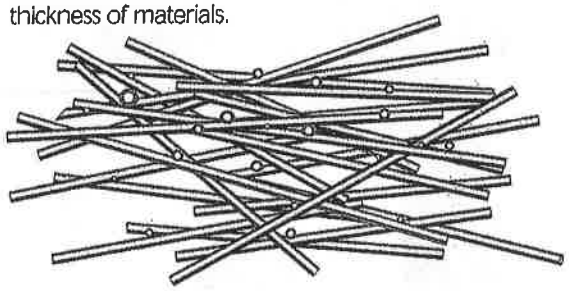

Felt Bag Finishes and Covers

Standard finish. Plain, as manufactured, without treatment or covers.

Glazed finish. The outer most surface fibers are melted by a momentary application of high heat. This bonds the fibers together and reduces the possibility of fiber migration.

Mesh covers completely encase the felt bag. This cover acts to contain any fibers that may separate from the filter bag. Materials available in mono and multifilament mesh, spun bonded nylon and polyester.

T:\Cad Files\Rentals - STANDARD DRAWINGS\EQUIPMENT SPECIFICATION\CARBON ADSORBERS\ST-0032-SPC Rev-B 10K Carbon Adsorber Unit.dwg

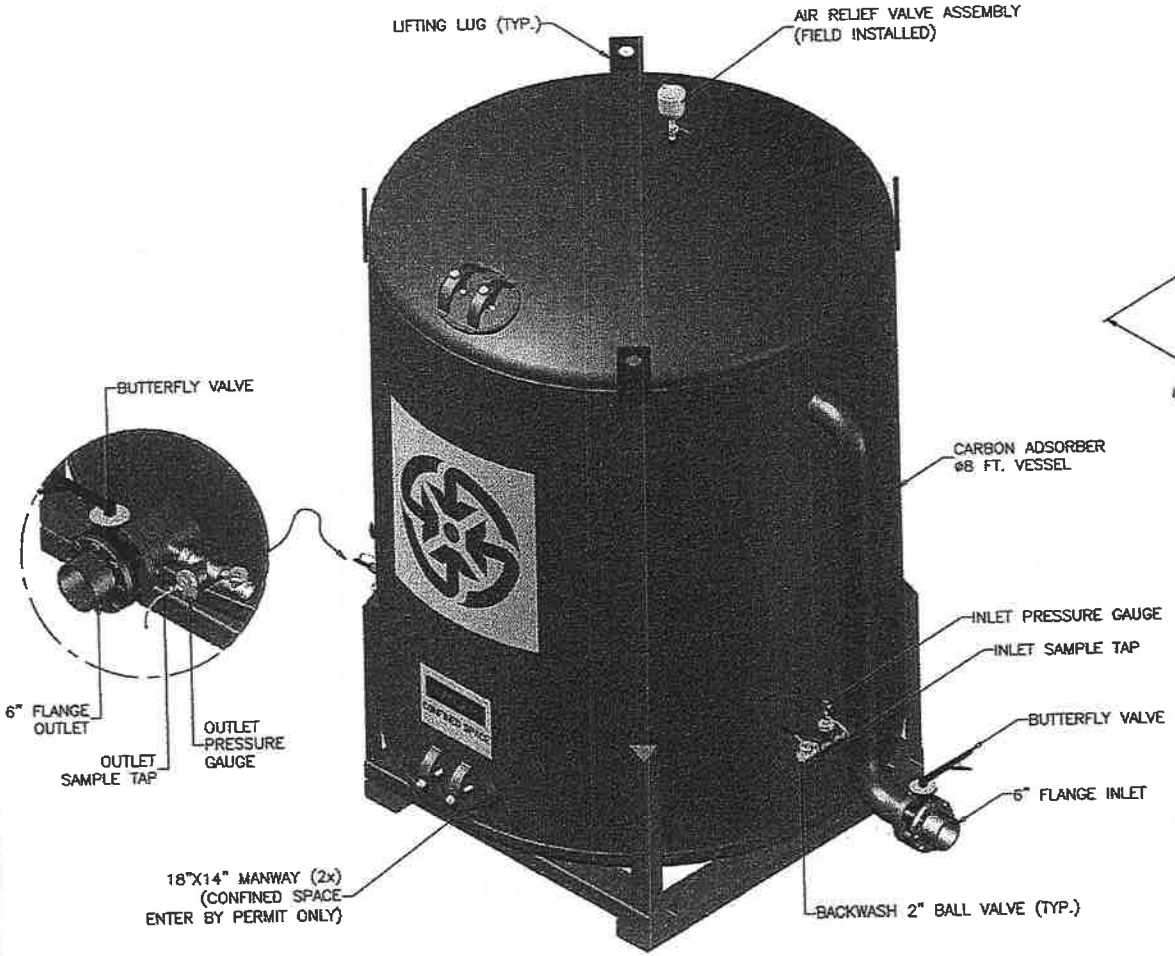

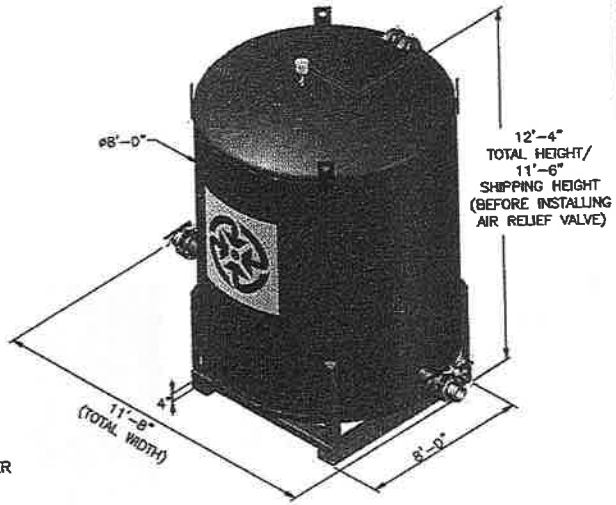

NOTE: THIS DRAWING DEPICTS A "TYPICAL" SKID. ACTUAL DETAILS AND DIMENSIONS MAY VARY.

10,000 POUNDS CARBON ADSORBER SPECIFICATIONS

– CARBON FILL:	10,000 Lbs.
– DESIGN STANDARD PRESSURE:	75 PSI
– MAX. FLOW RATE:	500/1,000 GPM
– HOUSING CONSTRUCTION:	A-36 CARBON STEEL
– INLET CONNECTION:	6" FLANGE
– OUTLET CONNECTION:	6" FLANGE
– DRAIN:	N/A
– CARBON FILL VOLUME:	350 Cu.ft.
– CARBON ADSORBER WEIGHT	
EMPTY:	5,000 Lbs.
SHIPPING (W/CARBON):	15,000 Lbs.
OPERATING:	30,000 Lbs.
– EBCT @ 500 GPM:	5.25 min.

NO.	REVISIONS	DATE
B	TYPICAL	05/26/09

10,000 Lb. CARBON ADSORBER STANDARD EQUIPMENT SPECIFICATION

SCALE: NTS	APPROVED BY: JB		DRAWN BY: AAV
DATE: 09/30/08			

GROUND/WATER TREATMENT & TECHNOLOGY
P.O. BOX 1174
DENVILLE, NJ 07834

THIS DRAWING IS THE PROPERTY OF
GROUND/WATER TREATMENT & TECHNOLOGY, INC

DWG SIZE: A	SHEET: 1 OF 1	DRAWING NUMBER: ST-0032-SPC	B

Design of Pump and Treat GAC Systems

A pump and treat scheme like the one shown in the Figure below made up of two adsorbers in series allows for the best utilization of the carbon. The adsorbers should be sized to give an empty bed contact time (EBCT) of between 5 and 15 minutes at a hydraulic surface loading of 1 to 8 gpm/ft^2. These operating parameters are important in that they can strongly influence the length of the mass transfer zone (MTZ). The length of the MTZ should be significantly shorter than the depth of carbon bed. If this is not the case rapid breakthrough of the components being controlled may occur.

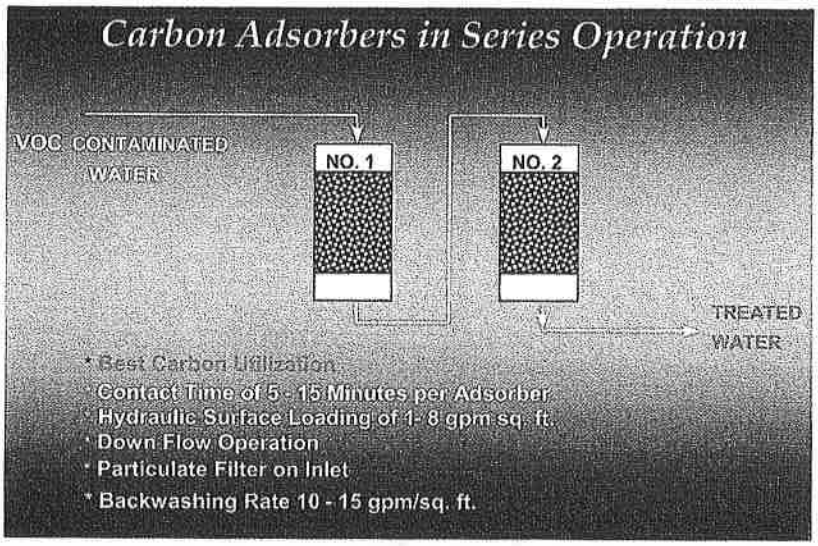

The lead adsorber in series operation is normally operated beyond the breakthrough discharge limit for the first compound needing to be controlled. This allows for more complete loading of the carbon contained in the first adsorber (reducing carbon consumption) before it is changed out with fresh carbon and the second adsorber is moved to the lead position. Under some circumstances such as low contaminant concentrations, long contact times and long expected operating cycles, adsorbers can be operated in parallel without a backup adsorber, provided the effluent from the adsorber is frequently monitored. Often the appearance of the contaminant of interest at the vessels 75% sample port is used to schedule changeout servicing. Monitoring in this manner assures breakthrough beyond acceptable limits does not occur.

The above is an excerpt from USFilter Westates Technical Dept. Los Angeles, CA, Tech Note No. 24, October 2001 "Carbon Applications for Groundwater Clean-Up" by James R. Graham, PhD., Technical Director, USFilter Westates.

DATA SHEET

USFILTER WESTATES CARBON AQUACARB® 830 AND 1240

Coal based granular activated carbon

(Formerly KG-401 and KG-502)

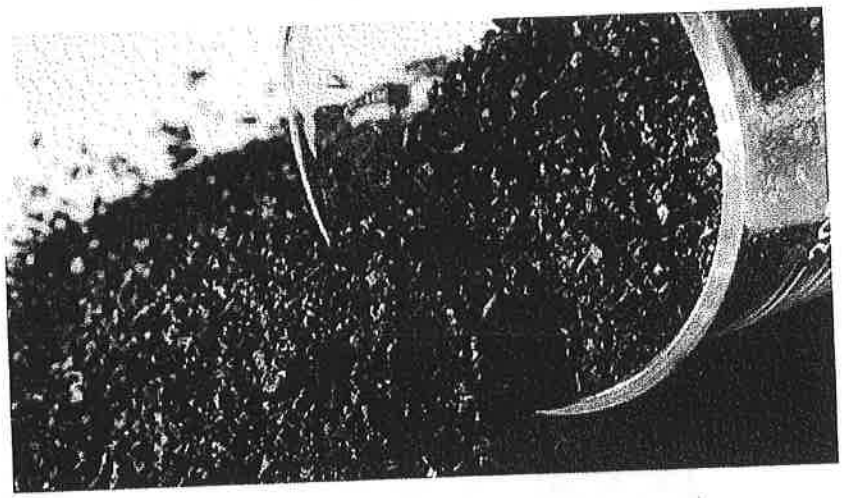

FOR MUNICIPAL, INDUSTRIAL AND REMEDIAL WATER TREATMENT

Description & Applications

AquaCarb® 830 and AquaCarb® 1240 are high activity granular activated carbons. manufactured from selected grades of bituminous coal. Manufactured by direct activation, they exhibit exceptional hardness and attrition resistance and have become a cost effective choice for use in municipal, industrial and remedial water treatment applications. These high surface area microporous carbons have been specifically developed for the removal of a broad range of organic contaminants from potable, waste and process waters.

- ANSI/NSF Standard 61 classified for use in potable water applications
- Fully conforms to physical, performance and leachability requirements established by the current ANSI/AWWA B604 (which includes the Food Chemical Codex requirements)
- A detailed quality assurance program guarantees consistent quality from lot to lot and shipment to shipment

Quality Control

All AquaCarb® activated carbons are extensively quality checked at our State of California certified environmental and carbon testing laboratory located in Los Angeles, CA. USFilter's laboratory is fully equipped to provide complete quality control analyses using ASTM standard test methods in order to assure the consistent quality of all AquaCarb® carbons.

Our technical staff offers hands-on guidance in selecting the most appropriate system, operating conditions and carbon to meet your needs. For more information, contact your nearest USFilter representative.

USFilter

DATA SHEET

AQUACARB® 830
AQUACARB® 1240

Coal based granular activated carbon

(Formerly KG-401 and KG-502)

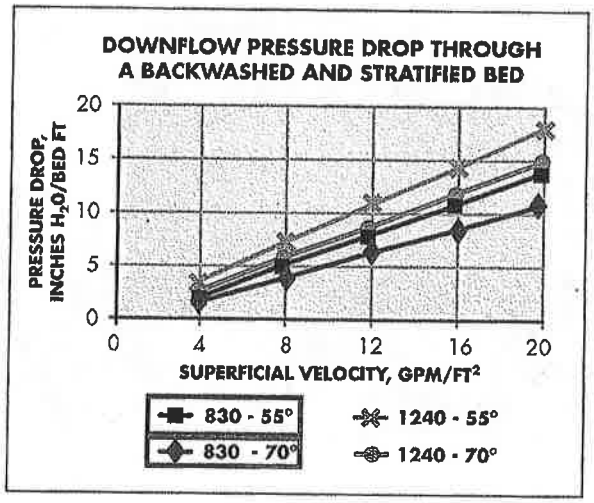

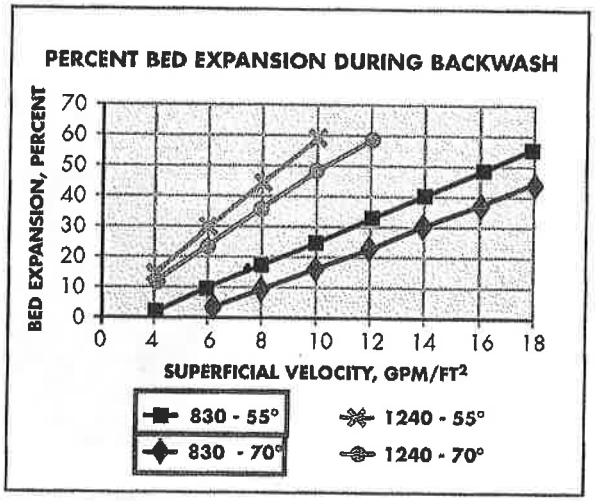

Safety Note: Wet activated carbon depletes oxygen from the air and therefore dangerously low levels of oxygen may be encountered. Whenever workers enter a vessel containing activated carbon, the vessel's oxygen content should be determined and work procedures for potentially low oxygen areas should be followed. Read Material Safety Data Sheet (MSDS) before using this product.

All information presented herein is believed reliable and in accordance with accepted engineering practices. USFilter makes no warranties as to the completeness of this information. Users are responsible for evaluating individual product suitability for specific applications. USFilter assumes no liability whatsoever for any special, indirect or consequential damages arising from the sale, resale or misuse of its products.

SPECIFICATIONS/TYPICAL PROPERTIES

Specification	AquaCarb® 830	AquaCarb® 1240
Carbon Type	Bituminous Coal	Bituminous Coal
Mesh Size, U.S. Sieve	8 x 30	12 x 40
Effective Size, mm	0.8 - 1.1	0.55 - 0.75
Uniformity Coefficient (max)	2.1	1.9
Iodine No., mgI_2/g (min.)	900	1000
Abrasion No., Wt. % (min.)	80	80
Apparent Density, g/cc	0.46 - 0.54	0.46 - 0.54

USFilter

Westates
Customer and
Technical Service Network:

Gulf Coast Region 800.659.1723
(Louisiana) 225.744.3153
Western Region 800.659.1771
Mid-Atlantic Region 800.659.1717
Midwest Region 708.345.7290
Northwest Region 800.659.1718
Southeast Region 225.744.3153
New England Region 800.659.1717

www.usfilter.com

USFilter reserves the right to change the specifications referred to in this literature at any time, without prior notice. AquaCarb is a trademark of United States Filter Corporation or its affiliates.

WS-AQ83-DS-0704

©2004 United States Filter Corporation

USFilter

WESTATES CARBON
15319 Carmenita Avenue
Santa Fe Springs, CA 90670

TOLL FREE 800.659.1771
TELEPHONE 562.229.9606
FACSIMILE 562.229.9322

CARBON SPECIFICATION

AQUACARB™ NS
(Reactivated)

ANALYSIS	SPECIFICATIONS
Type	Reactivated Bituminous Coal
PSD, U.S. Standard Mesh Size	8x30 mesh, 5% max. over, 5% max. under
Iodine Number, mgI_2/g	850 min. 950 typical
Abrasion Number, wt. %	75 min.
Moisture as Packed, wt. %	2% max.
Apparent Density, g/cc	0.46 - 0.58

T:\Cad Files\Rentals - STANDARD DRAWINGS\EQUIPMENT SPECIFICATION FLOW METERS\ST-0052-SPC Rev-A Flow Meter Assembly.dwg

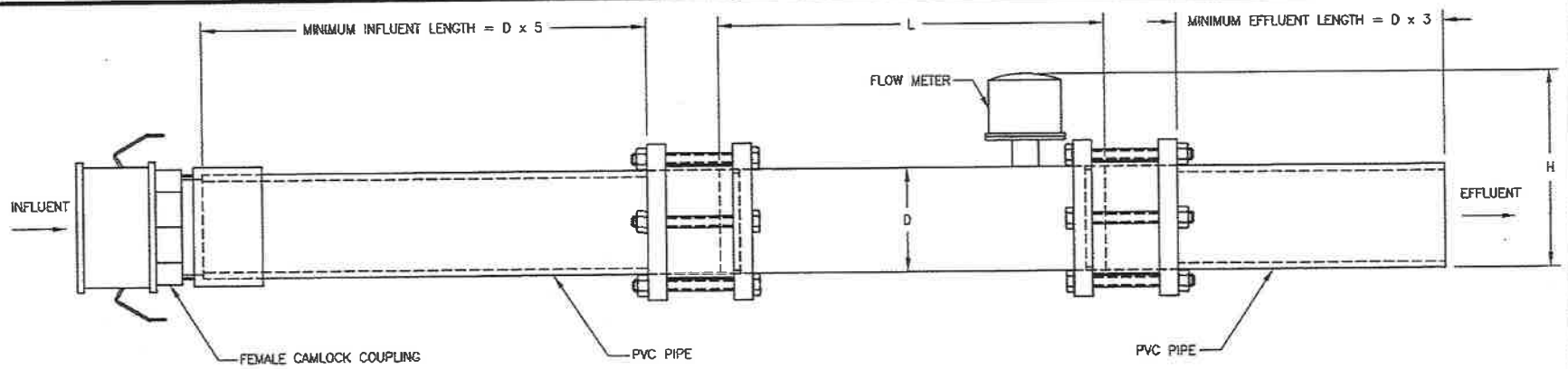

FLOW METER ASSEMBLY

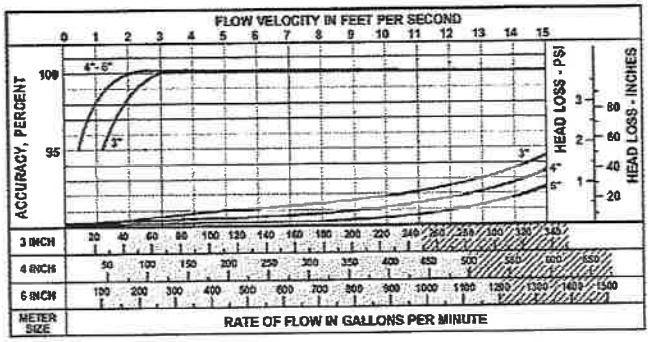

ACCURACY AND HEAD LOSS CURVES
(3"/4"/6" FLOW METERS)

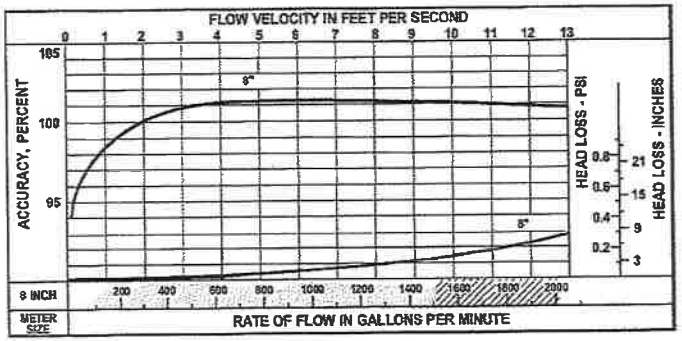

ACCURACY AND HEAD LOSS CURVES
(8" FLOW METER)

MG100 FLOW METER SPECIFICATIONS

	3	4	6	8
– METER SIZE, D (INCHES):				
– MAXIMUM FLOW U.S. GPM:	250	600	1200	1500
– MINIMUM FLOW U.S. GPM:	40	50	90	100
– HEAD LOSS IN INCHES AT MAX. FLOW:	29.50	23.00	17.00	6.75
– H (INCHES):	10.9	12.78	13.84	14.84
– L (INCHES):	13	20	20	20
– O.D. OF METER TUBE:	3.50	4.50	6.625	8.625
– MIN. INFLUENT LENGTH (INCHES):	15	20	30	40
– MIN. EFFLUENT LENGTH (INCHES):	9	12	18	24

– MAXIMUM TEMPERATURE: 160°F CONSTANT

– PRESSURE RATING: 150 PSI

NO.	REVISIONS	DATE
A	TYPICAL	01/28/09

FLOW METER ASSEMBLY STANDARD EQUIPMENT SPECIFICATION

SCALE: NTS	APPROVED BY: JB	DRAWN BY: AAV	
DATE: 01/28/09			

GROUND/WATER TREATMENT & TECHNOLOGY
P.O. BOX 1174
DENVILLE, NJ 07834

THIS DRAWING IS THE PROPERTY OF
GROUND/WATER TREATMENT & TECHNOLOGY, INC

DWG SIZE: A	SHEET: 1 OF 1	DRAWING NUMBER: ST-0052-SPC	A

MORETRENCH

....since 1931

DCA-220SSVU

From stationary standby power sources to mobile construction applications, MQ Power's WhisperWatt portable generators will meet your most demanding requiremens.

WhisperWatt generators have been engineered to provide the highest reliability and maximum motor starting capability.

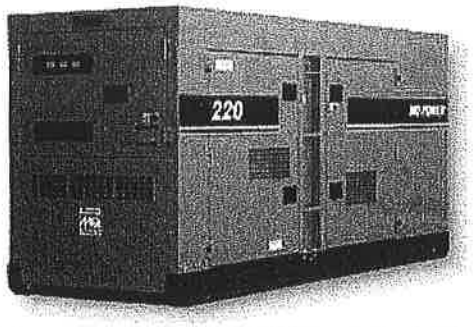

Performance Data	
Standby Output	194 kW , 242 kVA
Prime Output	176 kW , 220 kVA
Generator RPM	1800 RPMs
Generator Design	Revolving Field Self-Ventilated Dip-Proof Single Bearing
Voltage Regulation - (No Load to Full Load)	1 %
Power Factor	0.8
Armature Connection	Star with Neutral
Excitation	Brushless with AVR
No. Poles	4 Pole
Frequency	60 Hz
Available Voltages - 3 Phase	208, 220, 240, 416,440, 480 Reconnectable Volts
Available Voltages - Single Phase	120, 127, 139, 240, 254, 277 Adjustable Volts
Amps - Single Phase 120V	488.9 (4 Wire) Amps
Amps - Single Phase 240V	244.4 (4 Wire) Amps
Amps - Three Phase 240V	529 Amps
Amps - Three Phase 480V	265 Amps
Insulation	Class F
Sound Level dB(A) - Full Load at 23 feet	72 dB(A)
Power Source	
Engine Make / Model	Volvo TAD741GE
Dimensions	
Overall Length	144 in. , 365 cm
Overall Width	52 in. , 130 cm
Overall Height	69 in. , 175 cm
Approx. Net Wt. Dry	7696 lbs., 3490 kg.

Appendix C

- **System Overview**

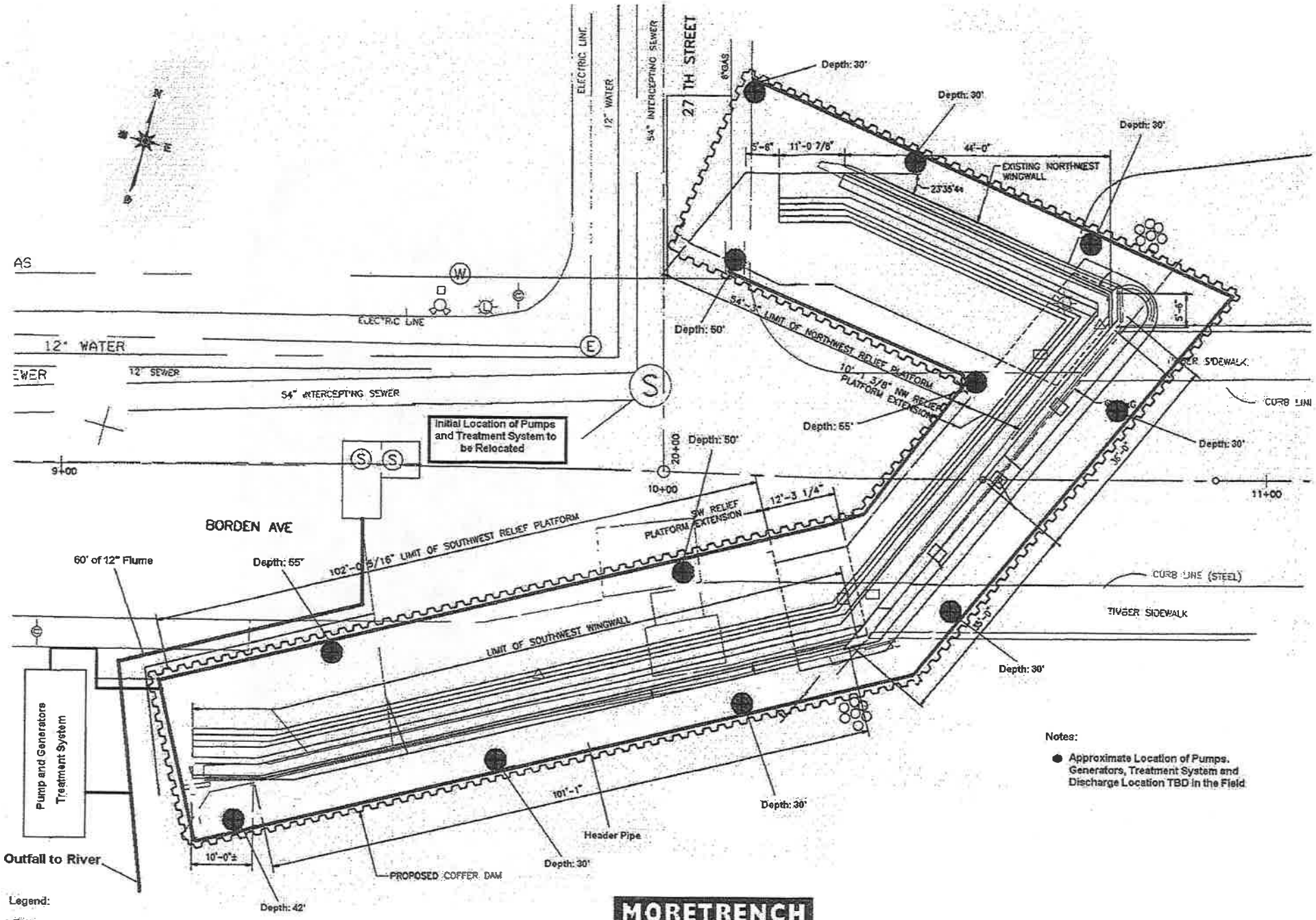

MORETRENCH

Borden Avenue
Dewatering Layout
7-9-09

MORETRENCH

....since 1931

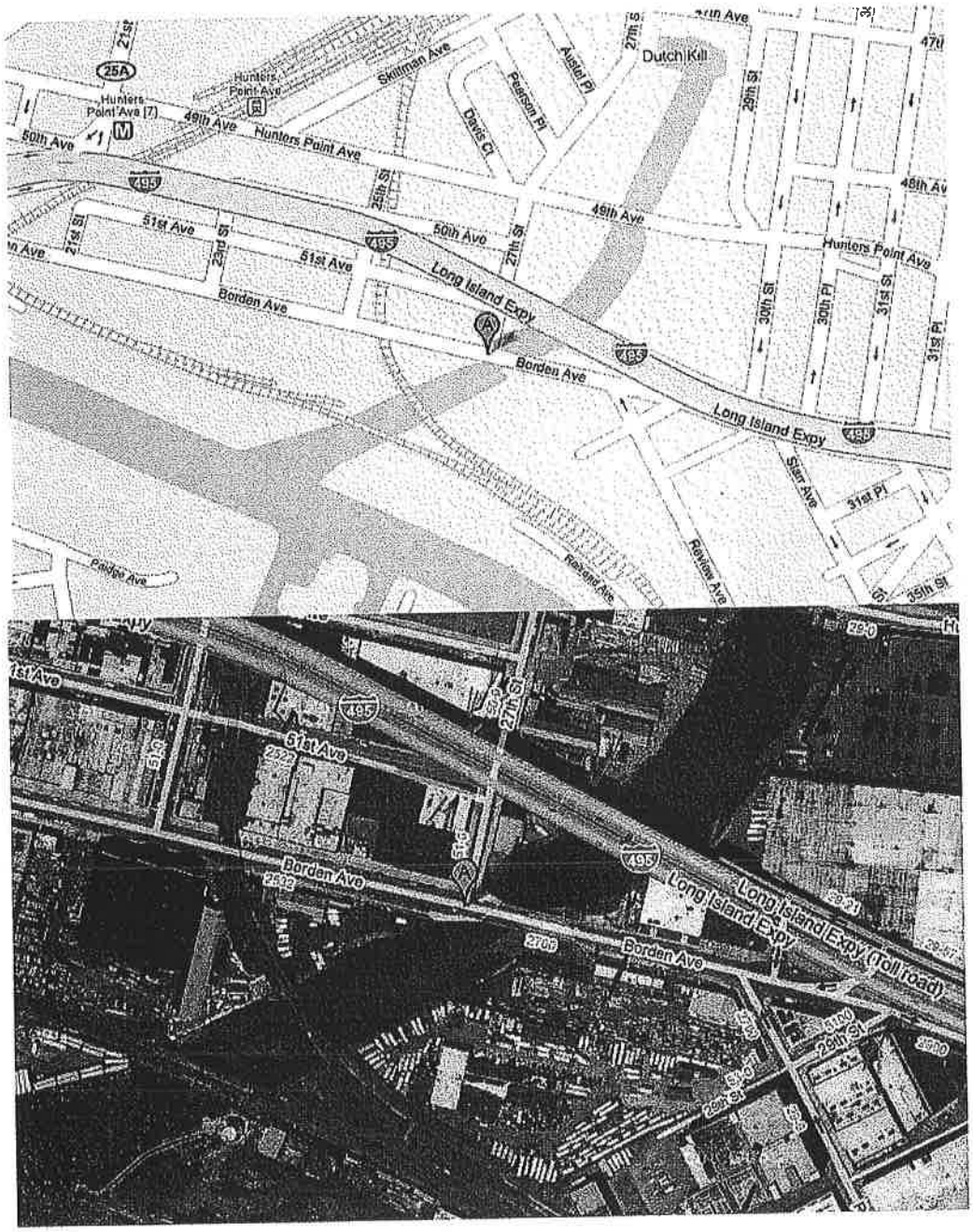

Borden Avenue Bridge
Queens, NY
7/23/09

MORETRENCH
....since 1931

- **BORED PILES & SHAFTS**
- **CUTOFF/CONTAINMENT WALLS**
- **DEWATERING**
- **GROUND FREEZING**
- **GROUNDWATER REMEDIATION**
- **INDUSTRIAL INFRASTRUCTURE**
- **LANDFILL GAS/LEACHATE SYSTEMS**
- **SOIL MODIFICATION/SOIL STABILIZATION**

Borden Avenue Bridge
Queens, NY
7/23/09

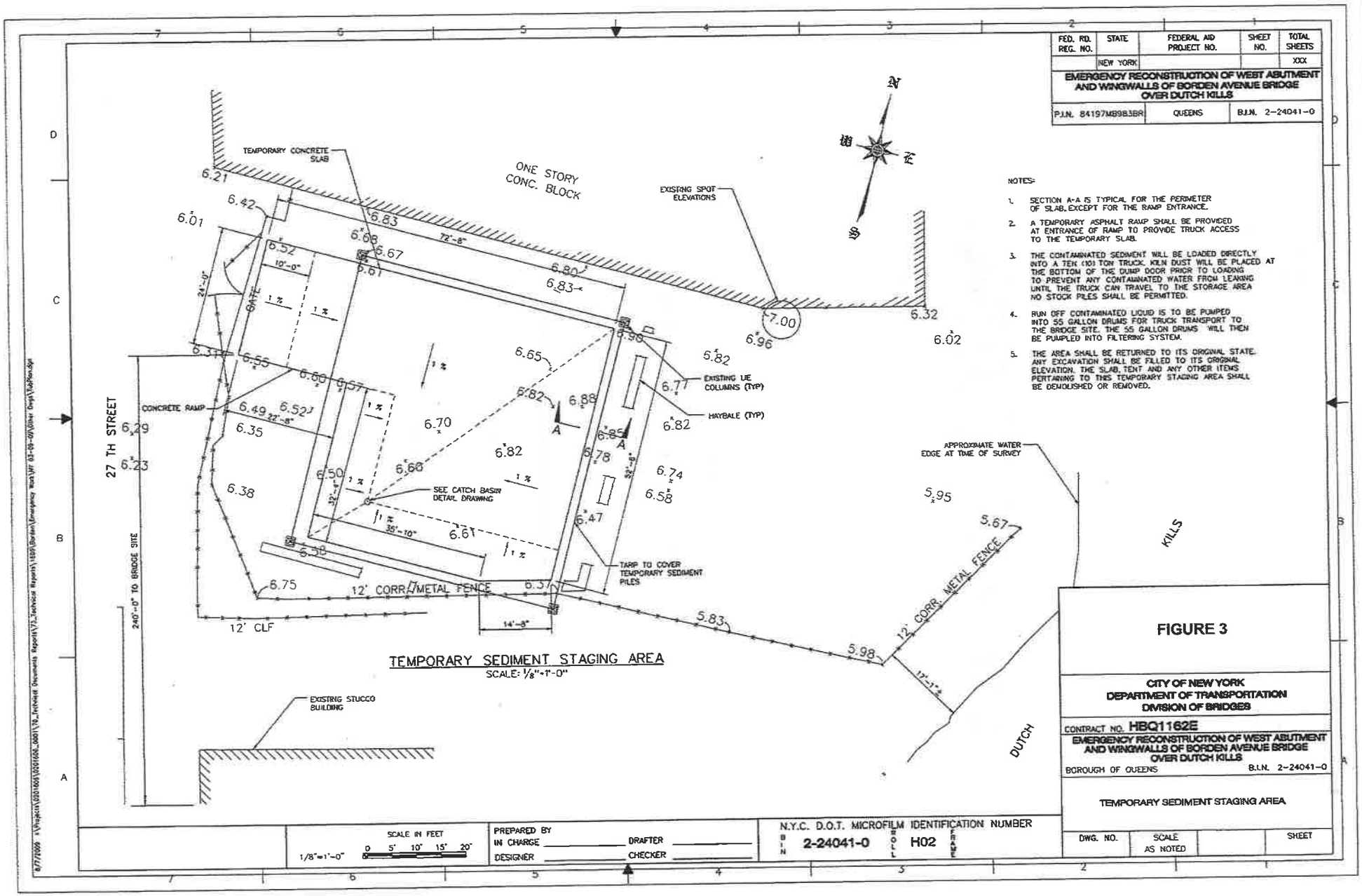

TEMPORARY SEDIMENT STAGING AREA
SCALE: 1/8"=1'-0"

NOTES:

1. SECTION A-A IS TYPICAL FOR THE PERIMETER OF SLAB, EXCEPT FOR THE RAMP ENTRANCE.
2. A TEMPORARY ASPHALT RAMP SHALL BE PROVIDED AT ENTRANCE OF RAMP TO PROVIDE TRUCK ACCESS TO THE TEMPORARY SLAB.
3. THE CONTAMINATED SEDIMENT WILL BE LOADED DIRECTLY INTO A TEN (10) TON TRUCK. KILN DUST WILL BE PLACED AT THE BOTTOM OF THE DUMP DOOR PRIOR TO LOADING TO PREVENT ANY CONTAMINATED WATER FROM LEAKING UNTIL THE TRUCK CAN TRAVEL TO THE STORAGE AREA NO STOCK PILES SHALL BE PERMITTED.
4. RUN OFF CONTAMINATED LIQUID IS TO BE PUMPED INTO 55 GALLON DRUMS FOR TRUCK TRANSPORT TO THE BRIDGE SITE. THE 55 GALLON DRUMS WILL THEN BE PUMPED INTO FILTERING SYSTEM.
5. THE AREA SHALL BE RETURNED TO ITS ORIGINAL STATE. ANY EXCAVATION SHALL BE FILLED TO ITS ORIGINAL ELEVATION. THE SLAB, TENT AND ANY OTHER ITEMS PERTAINING TO THIS TEMPORARY STAGING AREA SHALL BE DEMOLISHED OR REMOVED.

FED. RD. REG. NO.	STATE	FEDERAL AID PROJECT NO.	SHEET NO.	TOTAL SHEETS
	NEW YORK			XXX

EMERGENCY RECONSTRUCTION OF WEST ABUTMENT AND WINGWALLS OF BORDEN AVENUE BRIDGE OVER DUTCH KILLS

P.I.N. 84197MB98BR	QUEENS	B.I.N. 2-24041-0

SCALE IN FEET
1/8"=1'-0" 0 5' 10' 15' 20'

PREPARED BY
IN CHARGE _____ DRAFTER _____
DESIGNER _____ CHECKER _____

N.Y.C. D.O.T. MICROFILM IDENTIFICATION NUMBER
BIN 2-24041-0 ROLL H02 FRAME

FIGURE 3

CITY OF NEW YORK
DEPARTMENT OF TRANSPORTATION
DIVISION OF BRIDGES

CONTRACT NO. HBQ1162E

EMERGENCY RECONSTRUCTION OF WEST ABUTMENT AND WINGWALLS OF BORDEN AVENUE BRIDGE OVER DUTCH KILLS

BOROUGH OF QUEENS B.I.N. 2-24041-0

TEMPORARY SEDIMENT STAGING AREA

DWG. NO.	SCALE AS NOTED		SHEET

FED. RD. REG. NO.	STATE	FEDERAL AID PROJECT NO.	SHEET NO.	TOTAL SHEETS
	NEW YORK			XXX

EMERGENCY RECONSTRUCTION OF WEST ABUTMENT AND WINGWALLS OF BORDEN AVENUE BRIDGE OVER DUTCH KILLS

P.I.N. 84197MB983BR	QUEENS	B.I.N. 2-24041-0

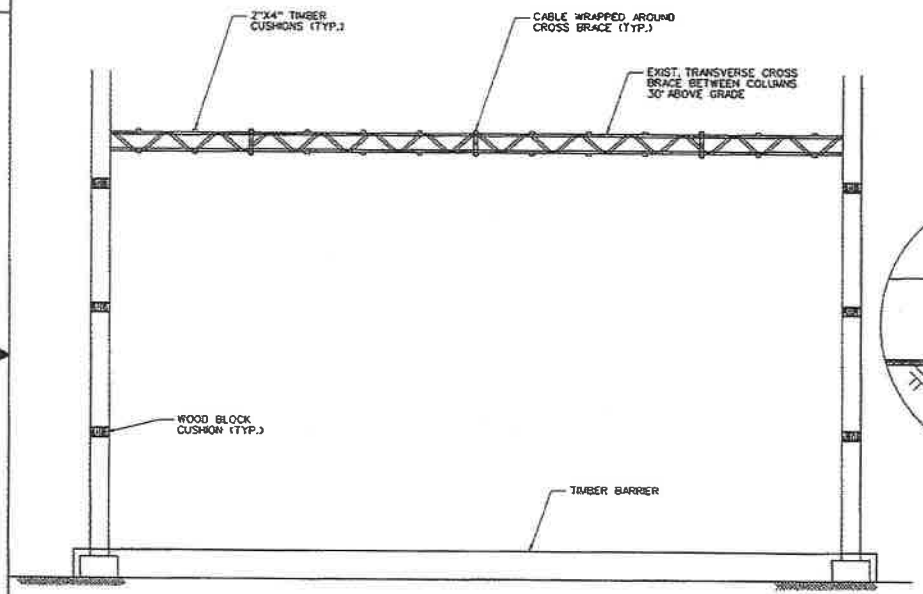

TYPICAL BENT ELEVATION
SCALE: 1/4"=1'-0"

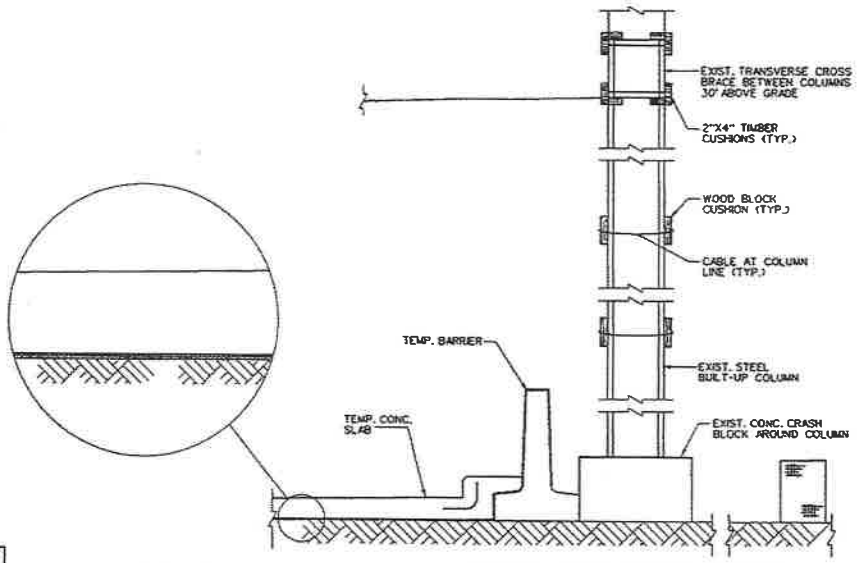

TYPICAL BENT CROSS SECTION
SCALE: 3/4"=1'-0"

FIGURE 3A

CITY OF NEW YORK
DEPARTMENT OF TRANSPORTATION
DIVISION OF BRIDGES

CONTRACT NO. HBQ1162E

EMERGENCY RECONSTRUCTION OF WEST ABUTMENT AND WINGWALLS OF BORDEN AVENUE BRIDGE OVER DUTCH KILLS

BOROUGH OF QUEENS B.I.N. 2-24041-0

TEMPORARY SEDIMENT STAGING AREA
SHEET 2

DWG. NO.	SCALE		SHEET
	AS NOTED		

PREPARED BY
IN CHARGE _____ DRAFTER _____
DESIGNER _____ CHECKER _____

N.Y.C. D.O.T. MICROFILM IDENTIFICATION NUMBER
BIN 2-24041-0 ROLL H02 FRAME

FED. RD. REG. NO.	STATE	FEDERAL AID PROJECT NO.	SHEET NO.	TOTAL SHEETS
	NEW YORK			XXX

EMERGENCY RECONSTRUCTION OF WEST ABUTMENT AND WINGWALLS OF BORDEN AVENUE BRIDGE OVER DUTCH KILLS

P.I.N. 84197MB983BR	QUEENS	B.I.N. 2-24041-0

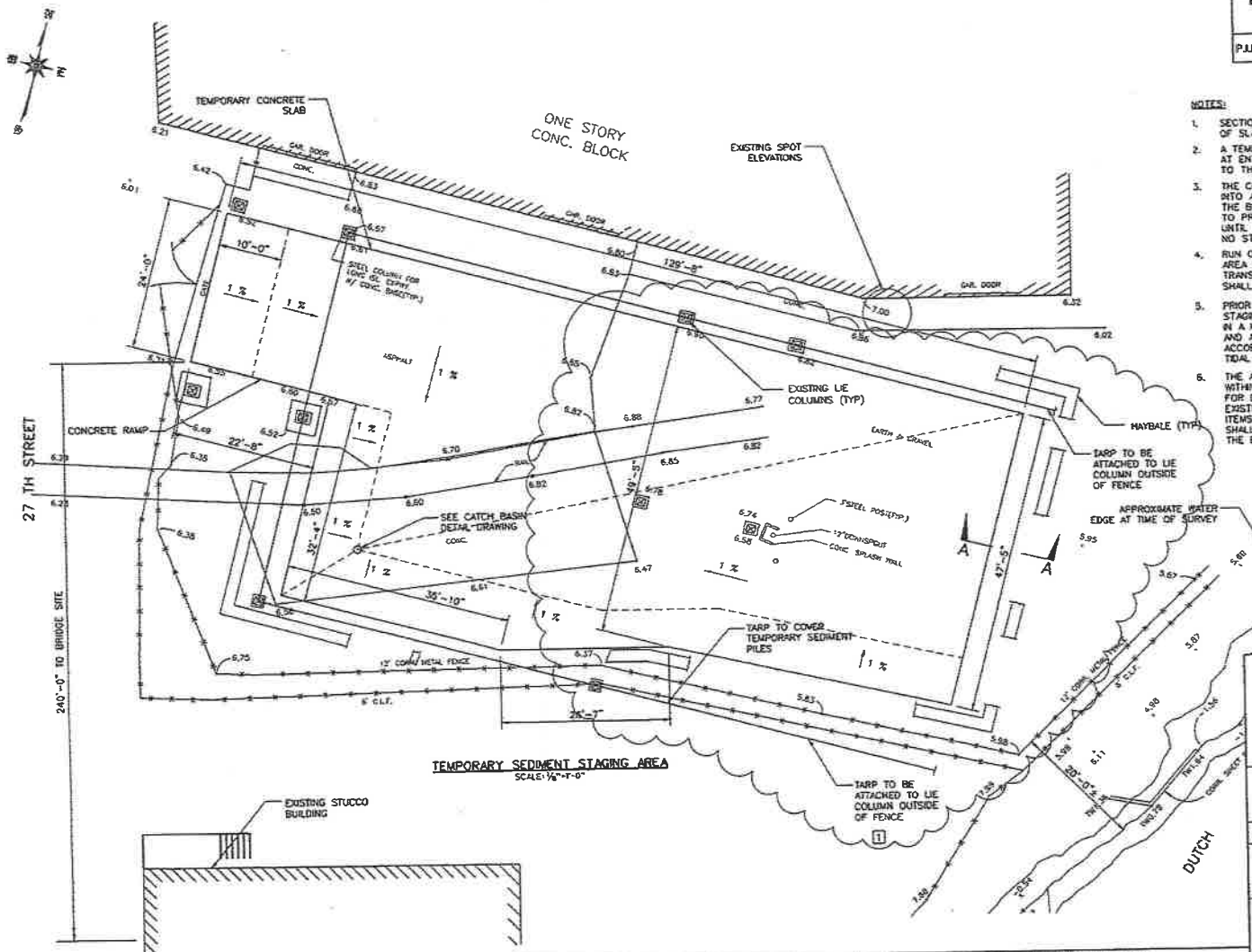

NOTES:

1. SECTION A-A IS TYPICAL FOR THE PERIMETER OF SLAB, EXCEPT FOR THE RAMP ENTRANCE.
2. A TEMPORARY ASPHALT RAMP SHALL BE PROVIDED AT ENTRANCE OF RAMP TO PROVIDE TRUCK ACCESS TO THE TEMPORARY SLAB.
3. THE CONTAMINATED SEDIMENT SHALL BE LOADED DIRECTLY INTO A TEN (10) TON DUMP TRUCK. KILN DUST WILL BE PLACED AT THE BOTTOM OF THE DUMP TRUCK DOOR PRIOR TO LOADING TO PREVENT ANY CONTAMINATED WATER FROM LEAKING UNTIL THE TRUCK CAN TRAVEL TO THE STORAGE AREA NO STOCK PILES SHALL BE PERMITTED.
4. RUN OFF CONTAMINATED LIQUID RETRIEVED IN STAGING AREA IS TO BE PUMPED INTO 55 GALLON DRUMS FOR TRUCK TRANSPORT TO THE BRIDGE SITE. THE 55 GALLON DRUMS SHALL THEN BE PUMPED INTO FILTERING SYSTEM.
5. PRIOR TO THE DEMOLITION OF THE TEMPORARY STAGING AREA, THE CONCRETE TUB SHALL BE CLEANED IN A MANNER WHICH ALLOWS ALL CONTAMINATED SOIL AND ASSOCIATED WATER TO BE SHIPPED OR TREATED ACCORDING TO THE CONDITIONS STATED UNDER THE TIDAL WETLANDS PERMIT.
6. THE AREA SHALL BE RESTORED TO ITS EXISTING CONDITION WITHIN TWO WEEKS AFTER TUB HAS BEEN PREPARED FOR DEMOLITION. ANY EXCAVATION SHALL BE FILLED TO ITS EXISTING ELEVATIONS. THE SLAB, TENT AND ANY OTHER ITEMS PERTAINING TO THIS TEMPORARY STAGING AREA SHALL BE DEMOLISHED OR REMOVED, AS DIRECTED BY THE ENGINEER.

FIELD CHANGE NO. 1
THIS DWG SUPERSEDES DWG NO. S-558 (12/29/09)

CITY OF NEW YORK
DEPARTMENT OF TRANSPORTATION
DIVISION OF BRIDGES

CONTRACT NO. **HBQ1162E**

EMERGENCY RECONSTRUCTION OF WEST ABUTMENT AND WINGWALLS OF BORDEN AVENUE BRIDGE OVER DUTCH KILLS

BOROUGH OF QUEENS B.I.N. 2-24041-0

TEMPORARY SEDIMENT STAGING AREA
SHEET 1 OF 2

DWG. NO.	SCALE	DATE	SHEET
S-558R	AS NOTED	12/29/09	98

STV Incorporated
architects/engineers/planners/interior designers
225 Park Avenue South, New York, NY 10003

SCALE IN FEET 1/8"=1'-0" 0 5' 10' 15' 20'

PREPARED BY
IN CHARGE A.P.M. DRAFTER M.R.
DESIGNER M.R. CHECKER A.P.M.

N.Y.C. D.O.T. MICROFILM IDENTIFICATION NUMBER
BIN 2-24041-0 ROLL H02 FRAME

CORRECTIVE ACTION PLAN

BORDEN AVENUE BRIDGE WEST ABUTMENT AND WINGWALL RECONSTRUCTION
BORDEN AVENUE BETWEEN 27TH STREET AND REVIEW AVENUE
LONG ISLAND CITY, NEW YORK 11101

NYCDOT CONTRACT NO.: #HBQ1162E
NYSDEC SPILL NO. 0903437

CONSULTANT PROJECT NO.: #0201606-0134

July 23, 2009

Prepared by:

STV Inc.
225 Park Avenue South
New York, New York 10003
Phone: (212) 777-4400
Fax: (646) 654-1861
Attn: Alan P. Marchan, P.E.

Prepared for:

NYCDOT
55 Water Street, 5th Floor
New York, New York 10041
Phone: (212) 839-4846
Fax: (212) 839-4925
Attn: George Klein, P.E

TABLE OF CONTENTS

1.0 INTRODUCTION 2
1.1 Site Location and Description 2
1.2 Project Background 2
1.3 Contamination Discovery 3
1.3.1 Summary of Sediment and Water Analytical Results 3
1.4 Spills Reporting 4
1.5 NYSDEC Consultation 4
1.6 Objectives 4
2.0 WATER TREATMENT AND DISCHARGE 6
2.1 Proposed Temporary Water Treatment System 6
2.2 Discharge Monitoring 6
3.0 SEDIMENT HANDLING AND DISPOSAL 8
3.1 Sediment Handling 8
3.2 Off-Site Disposal 9

FIGURE 1 – SITE LOCATION MAP 10
FIGURE 2- TEMPORARY OUTFALL PLAN AND DETAIL 11
FIGURE 3 – WEST WINGWALL AND ABUTMENT CROSS SECTIONS 12
FIGURE 4 – TEMPORARY SEDIMENT STAGING AREA 13
FIGURE 5 – TEMPORARY SEDIMENT STAGING AREA CROSS SECTION 14
FIGURE 6 – SEDIMENT STAGING AREA CATCH BASIN DETAILS 15

TABLE 1 – NYSDEC SOIL EXCEEDENCES 16
TABLE 2- NYSDEC GROUNDWATER EXCEEDENCES 17

APPENDIX A – ENVIRONMENTAL PERMITS 18
APPENDIX B - TEST AMERICA ANALYTICAL DATA REPORT 19
APPENDIX C - YORK ANALYTICAL DATA REPORT 20
APPENDIX D – WATER TREATMENT PLAN 21
APPENDIX E – SPDES PERMIT EQUIVALENT APPLICATION 22
APPENDIX F – TREATMENT SYSTEM SCHEMATIC 23
APPENDIX G – CEMENT KILN DUST MSDS 24
APPENDIX H – CLEAN EARTH FACILITY PERMIT AND SUPPORTING DOCUMENTATION 25
APPENDIX I – WASTE TRANSPORTER PERMIT 26

1.0 INTRODUCTION

On behalf of the New York City Department of Transportation (NYCDOT) STV Incorporated (STV) prepared this Corrective Action Plan (CAP) to be implemented at the Borden Avenue Bridge Site located on Borden Avenue in Queens, NY. The CAP was prepared to address remediation issues associated with petroleum-impacted sediment and water encountered during dewatering and excavation operations at the Site as part of the emergency bridge repair project.

STV understands that this CAP will likely be implemented pursuant to a Stipulation Agreement between NYCDOT and the New York State Department of Environmental Conservation (NYSDEC).

1.1 Site Location and Description

Borden Avenue is a two-lane east west oriented local city street in Queens extending from the East River to Greenpoint Avenue in the Borough of Queens, NY. The Borden Avenue Bridge is located just south of the Long Island Expressway between 27th Street and Review Avenue in Long Island City, NY 11101. Figure 1 provides a Site Location Map.

The Bridge, identified by the NYCDOT as B.I.N 2-24041-0, is a retractile type moveable bridge. The bridge structure carries a two-lane two-way vehicular roadway with sidewalks on either side over the Dutch Kills.

1.2 Project Background

In March 2008, the NYCDOT discovered that an existing crack in the bridge's west abutment wingwall had expanded, leading to a continued movement of the west abutment wall. NYCDOT began a weekly monitoring program which has shown the wall movement to be accelerating. On October 16, 2008, NYCDOT submitted a formal Declaration of Emergency to the City which stressed that it was critical to expeditiously perform the required repair work to avert serious danger to life, public safety, and property. Contracting services were procured to begin repairs and the bridge was closed as an emergency action due to safety concerns.

In order to perform preliminary bridge inspection work, a cofferdam was installed around the west abutment and its wingwalls. The cofferdam allows for the dewatering within its confines to lower the water level and facilitate sediments excavation. In addition, during the excavation work, the existing storm sewer outfall to the Dutch Kills had to be removed and rerouted. A 12-inch corrugated pipe was connected to an existing storm sewer structure and trenched in a southwest direction to a new outfall location adjacent to the southwestern end of the cofferdam. The discharge location is at N 40° 44' 19.98", W 73° 56' 36.97". Figure 2 provides the plan and detail of the temporary sewer outfall piping and discharge.

The following environmental permits have been obtained from the NYSDEC for this project to date:

- NYSDEC Determination of No Jurisdiction — Permit No. 2-6304-01440/00008
- NYSDEC Long Island Well Permit — Permit No. 2-6304-01440/00007
- NYSDEC Excavation & Fill in Navigable Waters — Permit No. 2-6304-01440/00006
- NYSDEC Water Quality Certification — Permit No. 2-6304-01440/00005
- NYSDEC Tidal Wetlands — Permit No. 2-6304-01440/00004

Copies of these permits are attached in Appendix A.

1.3 Contamination Discovery

During the excavation within the cofferdam, contractor personnel noted odors. On the morning of June 19, 2009, NYCDOT discovered an oil sheen and noticed an odor in the settling tank. NYCDOT shut down the dewatering operation and the contractor placed oil spill booms around the outfall area to prevent migration into the Dutch Kills.

At an estimated depth from the top of the channel to 10 feet below grade, excavated sediments began exhibiting the appearance and odor of petroleum. Two samples of the impacted sediment and two water samples: one within the settling tank and one at the outfall discharge, were collected on June 19, 2009 by Environmental Planning & Management (EPM), the environmental consultant for HAKS, the project resident engineering firm for the project. The samples were sent to Test America Laboratories in Shelton, CT (Test America) for analysis on an expedited turnaround request. Receipt of partial and preliminary analytical results began on June 22, 2009 with the preliminary footprint identification of a mix between a No. 6 fuel oil and motor fuel.

In addition, Moretrench collected a water sample from within the cofferdam excavation on June 19, 2009 and shipped the sample to York Analytical Laboratories of Stratford, CT. Results of both sets of samples are summarized below.

1.3.1 Summary of Sediment and Water Analytical Results

The samples collected by EPM were analyzed for volatile organic compounds (VOCs), semi-volatile organic compounds (SVOCs), pesticides, herbicides, and metals. STV compared the results of the samples to NYSDEC soil and groundwater standards. Specifically, soil concentrations were compared to the NYSDEC Recommended Soil Cleanup Objectives (TAGM 4046) and the State's Brownfield Cleanup, Track 1 - Unrestricted Use: Generic Soil Cleanup Table (Track 1) pursuant to 6 NYCRR Part 375-6.8. Water samples were compared to NYSDEC Technical & Operational Guidance Series (TOGS) Ambient Water Quality Standards and Guidance Values.

Acetone, eight individual polyaromatic hydrocarbons (PAHs), the pesticides dieldrin and endrin, and nine metals exceeded both TAGM 4046 and Track 1 objectives in both soil samples. Heptachlor epoxide also exceeded the TAGM objective in one of the two samples. Diesel range organic (DRO) compounds were detected in the soil samples at 5,100 and 7,000 mg/kg, respectively. The gasoline range organic (GRO) petroleum fraction of the two soil samples was considerably lower at 28 and 50 mg/kg, respectively.

Water sample W-Tank, collected within the settling tank revealed concentrations of six PAHs, three PCB aroclors and seven metals (antimony, arsenic, cadmium, chromium, copper, lead, and nickel) exceeding NYSDEC TOGS standards or guidance values as applicable. Lower concentrations of PAHs and metals were detected in Sample W-Exc which was collected from within the cofferdam excavation. Five PAHs and one metal (lead) exceeded the applicable TOGS standard or guidance value. PCBs were non-detected in this sample. The DRO concentration of the W-Tank sample was 11,000 ug/L while the W-Exc sample contained 890 ug/L DRO. The GRO concentration of the W-Tank sample was an estimated concentration of 0.018 ug/L and non detected in the W-Exc sample. Metals analysis indicated NYSDEC TOGS exceedences of copper (224µg/L), lead (150 µg/L) and nickel (135µg/L).

Summaries of the analytical results can be found in the attached Tables 1 and 2. The laboratory data package can be found in Appendices B and C.

In summary, sediment removed from the cofferdam on June 19, 2009 contained concentrations of metals, PAHs, and pesticides which exceeded NYSDEC guidelines. The fingerprint analysis, supported by the petroleum organic analyses (DRO and GRO), indicates that the petroleum present in the sediment is a heavier fuel oil between a motor fuel and a No. 6 fuel oil. None of the soil samples exceeded Toxic Characteristic Leaching Procedure (TCLP) parameters for characterizing the sediment for waste disposal purposes.

Water samples collected contained concentrations of PAHs, PCBs, antimony, arsenic, cadmium, chromium, copper, lead, and nickel which exceeded NYSDEC standards and guidance values.

1.4 Spills Reporting

The presence of petroleum contaminated soil was reported to the NYSDEC Spills Line on June 23, 2009. Spill number 0903437 was created and Ms. Veronica Zhune was assigned as NYSDEC Spills Case Manager.

In addition, the National Response Center (NRC) was contacted on June 26, 2009 to report the sheen that was discovered at the outfall area. The NRC assigned Spill Number 909828. NRC was informed that NYSDEC had been contacted and that a case number had been assigned.

It should be noted that Sanborn Fire Insurance Maps dated 1915, 1936, and 1950 from the site vicinity indicated the presence of a fuel storage facility adjacent to the northwest of the bridge from at least 1915 to at least 1950. STV has provided copies of these maps to Ms. Zhune of NYSDEC.

1.5 NYSDEC Consultation

A meeting was held with the NYSDEC in their Long Island City offices on June 29, 2009 to discuss the remedial measures that must be implemented in order to continue emergency bridge repair work at the site. NYSDEC indicated that a CAP must be prepared that addresses contaminated sediments and dewatering fluids in order to close out the NYSDEC spill case and continue with construction activities. It was agreed that the scope of the remediation would be limited to the work needed to address the emergency repair, i.e. management of sediments and dewatering fluid within the cofferdam.

STV and NYCDOT understand that in lieu of a complete SPDES permit application process, the NYSDEC will allow the submittal of a SPDES Permit Equivalent Application. The requirements for the application were provided to NYCDOT subsequent to the June 29, 2009 meeting. It is also understood that no public comment period or public hearings are required and that discharge standards will be dependent on the contamination present in the sediments and water. NYSDEC will forward a draft Stipulation Agreement to NYCDOT to memorialize the CAP.

1.6 Objectives

The objectives of this CAP are to:

- Implement procedures for handling and disposing of petroleum-impacted sediment from the cofferdam in order to proceed with the emergency bridge repair,

- Treat and discharge water generated from the dewatering operation within the confines of the cofferdam and from sediment stockpiles in a manner that complies with NYSDEC requirements and discharge to surface water standards,

- Conduct the work in an efficient and expeditious manner so as to minimize further delays to the emergency bridge repair project, and.

- Successfully close out the existing Spill Case No. 0903437.

2.0 WATER TREATMENT AND DISCHARGE

As a result of the petroleum-impacted sediment, Moretrench, under subcontract to Maracap, amended its Dewatering Plan, now referred to as a Water Treatment Plan (dated July 23, 2009). The Water Treatment Plan addresses the treatment of impacted groundwater from within the cofferdam and run off from the wet sediment stockpiles. The groundwater table will be lowered and withdrawn from the cofferdam through a series of permitted wells from within the confines of the cofferdam and treated on site through a designed water treatment system prior to discharge to the Dutch Kills. The information provided in the CAP meets the SPDES Permit Equivalent Application Requirements for Remediation Discharges to Surface or Groundwaters. A copy of the plan is provided in Appendix D and a copy of the completed SPDES Permit Equivalent Application is attached as Appendix E.

2.1 Proposed Temporary Water Treatment System

The water treatment system has been designed by Moretrench to provide for sufficient constituent removal from the water to meet NYSDEC discharge requirements. A summary of the general treatment components is as follows.

- One settling tank
- One Chemical Mixing Tank
- One Chemical Injection and Storage Unit
- Two Clarifiers rated for 300 gallons per minute (gpm)
- One Sludge Pump
- One Cone Bottom Tank
- Two Electric Transfer Pumps
- Three 6-bag Filter Housings in parallel operation with a 600 gpm nominal capacity each
- Two con-code Carbon Adsorbers, each with 10,000 lbs activated carbon, 600 gpm nominal capacity in series
- One 6-inch diameter flow meter with totalizer in the 90 to 1,200 gpm range
- Piping and/or flexible hosing from the existing settling tank to the flow meter.

A schematic drawing of the treatment components is provided as Appendix F. The treatment system has been designed for a discharge rate of 600 gpm.

Solids and/or sludge that have settled to the bottom of the clarifier will need to be periodically removed to prevent accumulated material from clogging the tube settlers thus reducing the efficiency of the unit. The base of the bulk settling clarifier contains a series of valved clean out ports. Solids/sludge can be pumped from these ports to a sludge holding tank through the use of an electric diaphragm sludge pump. Water decanted from the sludge holding tank can be introduced back to the head of the plant while the remaining solids will be periodically transported to the Clean Earth facility in Carteret, NJ.

2.2 Discharge Monitoring

A discharge monitoring plan to include analytical parameters and sampling frequency will be developed upon review and approval of this CAP by NYSDEC Division of Water, Bureau of Water Permits.

The estimated duration for the effluent discharge is three months. The first day of discharge will be dependent on NYSDEC approval of the CAP, and treatment system installation.

The water treatment system will be operated and maintained by Maracap with technical assistance provided by Moretrench. The total discharge volume, average pump rate, and times of pump operation will be documented daily. The flow meters will be equipped with totalizers which measure the cumulative flow through a meter. Standby power and standby vacuum pump will be onsite and maintained in proper working order.

3.0 SEDIMENT HANDLING AND DISPOSAL

Section 3 presents the procedures to be employed to handle and dispose of the Dutch Kills sediments that will be removed in conjunction with the dewatering operation.

NYCDOT intends to only manage the contaminated soils and water within the cofferdam and only to the limits of the contract construction excavation. Post-excavation soil sampling will not be technically feasible within the cofferdam since a 2- foot deep tremie cap will be placed for the entire bottom of the cofferdam to prevent any contaminated liquid to resurface prior to pulling the metal sheets from the cofferdam. There is potential for petroleum contamination to remain outside the cofferdam and construction project limits which will remain in place at the completion of the project. Figure 3 shows a cross section of the proposed west wingwall and abutment emergency reconstruction.

3.1 Sediment Handling

Sediment will continue to be excavated from within the confines of the cofferdam by either a *CAT* 320 or *CAT* 345 Excavator or through the use of a Clamshell attached to the HB248 Link belt crane. Excavated sediment will be stored in a nearby lot beneath the Long Island Expressway (LIE)/495 viaduct at 27th Street and 51st Avenue (approximately 500 feet north of the project site). The lot is leased by the NYCDOT from the City of New York. The use of this additional work area is necessary to allow the temporary staging of excavated material generated during around the clock dewatering and excavation operations. Figure 4 provides a drawing which shows the layout of the staging area.

The sediment staging area will be cleared of vegetation prior to placement of filter fabric and 6- mil poly sheeting. A minimum of a 6- inch thick slab will be placed on top of the poly and filter fabric. The concrete slab sill be surrounded with 6-inch curbing. Concrete jersey barriers, interlocked with additional poly placed over them to the ground will be placed adjacent to curbing. Hay bales will be placed as an additional layer of containment along the perimeter of the area (fence line). Figure 5 depicts a typical cross section of the containment features.

The 6- inch minimum concrete slab will be sloped to collect water from the excavated sediment into a NYC Type II Precast Catch Basin with a precast top and a C.I drain inlet The precast top will be set 6" below the top of the new slab. The casting will then be set on top, backfilled all around, and the new concrete slab will be poured over the top of the precast cover and flush to the casting. Figure 6 provides construction details of the catch basin. If drained water accumulates in the basin, it will be pumped dry as necessary using either 55-gallon drums or a vacuum truck and transported to the on-site treatment system for treatment prior to discharge into the Dutch Kills.

Newly excavated sediment will transported via a 20-cubic yard water-tight dump truck to the lot and placed in a conical pile within the containment to facilitate excess water runoff into the collection sump. Once this material has been determined to be sufficiently drained, it will be spread out for drying and mixing with kiln dust to await loading and off-site transport. Appendix G provides a Material Safety Data Sheet (MSDS) of the kiln dust.

Water-tight trucks will be loaded via a pay loader with the dried material. Additional kiln dust will be placed in the rear of the truck as an extra precaution against leakage.

The staging area will be returned to its original state when the project is completed. Excavations will be backfilled with clean fill and the original grade restored. The slab, tenting, and any other times pertaining to the staging area will be removed from the site.

3.2 Off-Site Disposal

The dried sediment will be shipped off site to Clean Earth of Carteret, New Jersey (Clean Earth) (NJ Facility Registration # 132310) for treatment. Clean Earth is registered by the New Jersey Department of Environmental Protection (NJDEP) as an approved Recycling Center for Petroleum Contaminated Soil. Appendix H provides the NJDEP State permit approval and other supporting documentation for the Clean Earth facility.

The material will be shipped as non-hazardous waste by Rainbow Transport Corporation of Hackettstown, NJ. Rainbow Transport holds a valid NYSDEC Part 364 Waste Transporter Permit No. NJ-586 (Effective 6/26/09 and Expires 5/27/10). Appendix I provides a copy of the waste transporter permit.

Proper documentation will be collected to ensure that material is disposed accordingly. Each waste load will be tracked using a Clean Earth non-hazardous material manifest.

Figure 1 – Site Location Map

SCALE: 1" = 2,000'

0 1,000 2,000

REFERENCE: United States Department of Interior Geological Survey Brooklyn, NY (1967, Photorevised 1979)

PROJECT LOCATION MAP
BORDEN AVENUE BRIDGE OVER THE DUTCH KILLS CREEK
NEW YORK CITY DEPARTMENT OF TRANSPORTATION

Figure 2- Temporary Outfall Plan and Detail

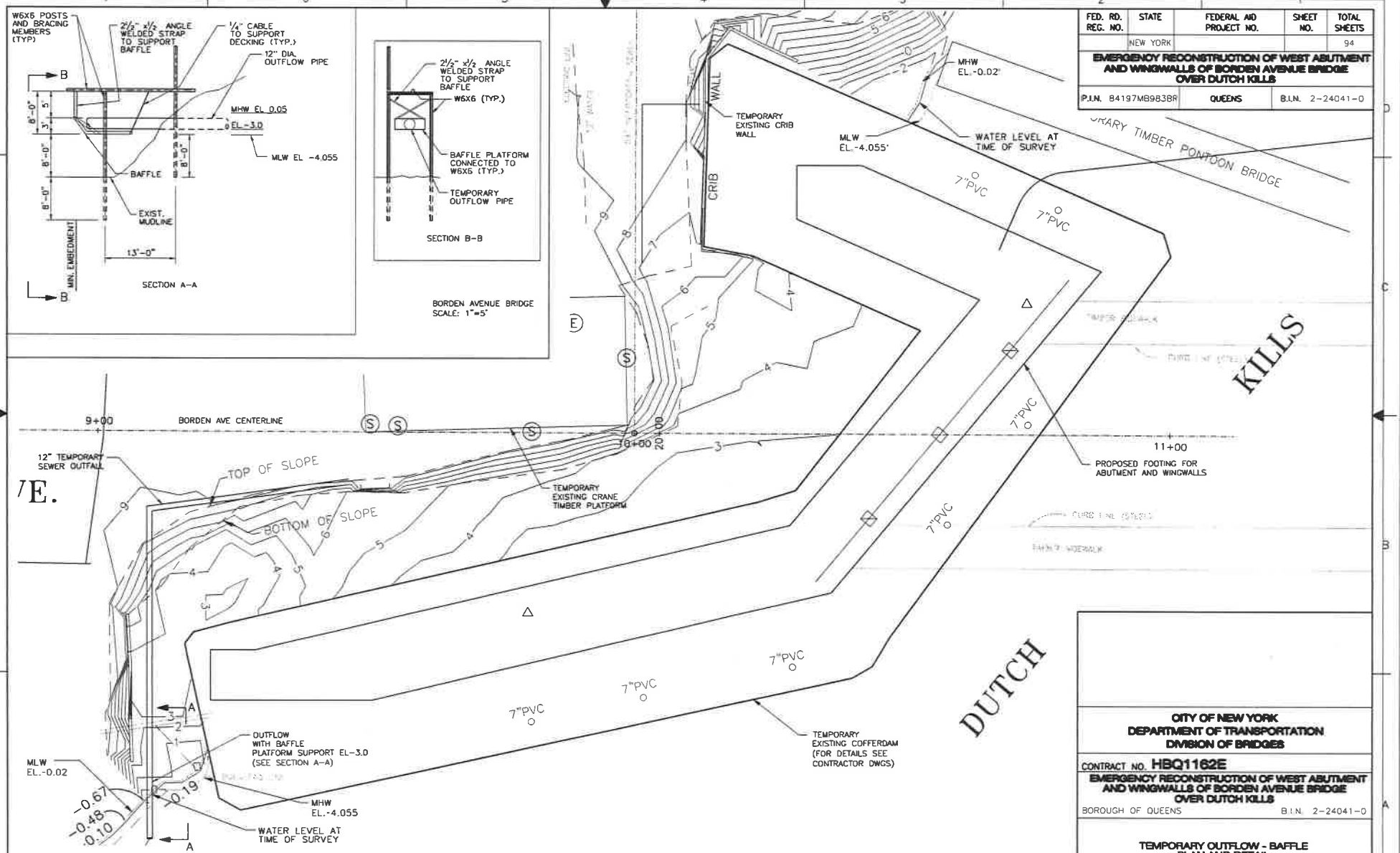

FED. RD. REG. NO.	STATE	FEDERAL AID PROJECT NO.	SHEET NO.	TOTAL SHEETS
	NEW YORK			94

EMERGENCY RECONSTRUCTION OF WEST ABUTMENT AND WINGWALLS OF BORDEN AVENUE BRIDGE OVER DUTCH KILLS

P.I.N. 84197MB983BR | QUEENS | B.I.N. 2-24041-0

STV Incorporated
architects/engineers/planners/interior designers
225 Park Avenue South, New York, NY 10003

PREPARED BY
IN CHARGE A.P.M. DRAFTER D.H.
DESIGNER E.N.B. CHECKER B.T.

N.Y.C. D.O.T. MICROFILM IDENTIFICATION NUMBER
BIN 2-24041-0 ROLL H02 FRAME

CITY OF NEW YORK
DEPARTMENT OF TRANSPORTATION
DIVISION OF BRIDGES

CONTRACT NO. HBQ1162E

EMERGENCY RECONSTRUCTION OF WEST ABUTMENT AND WINGWALLS OF BORDEN AVENUE BRIDGE OVER DUTCH KILLS

BOROUGH OF QUEENS B.I.N. 2-24041-0

TEMPORARY OUTFLOW - BAFFLE PLAN AND DETAIL

DWG. NO.	SCALE	DATE	SHEET
XXXX	AS NOTED	06/16/09	XX

Figure 3 – West Wingwall and Abutment Cross Sections

FED. RD. REG. NO.	STATE	FEDERAL AID PROJECT NO.	SHEET NO.	TOTAL SHEETS
	NEW YORK			XXX

EMERGENCY RECONSTRUCTION OF WEST ABUTMENT AND WINGWALLS OF BORDEN AVENUE BRIDGE OVER DUTCH KILLS

P.I.N. 84197MB983BR	QUEENS	B.I.N. 2-24041-0

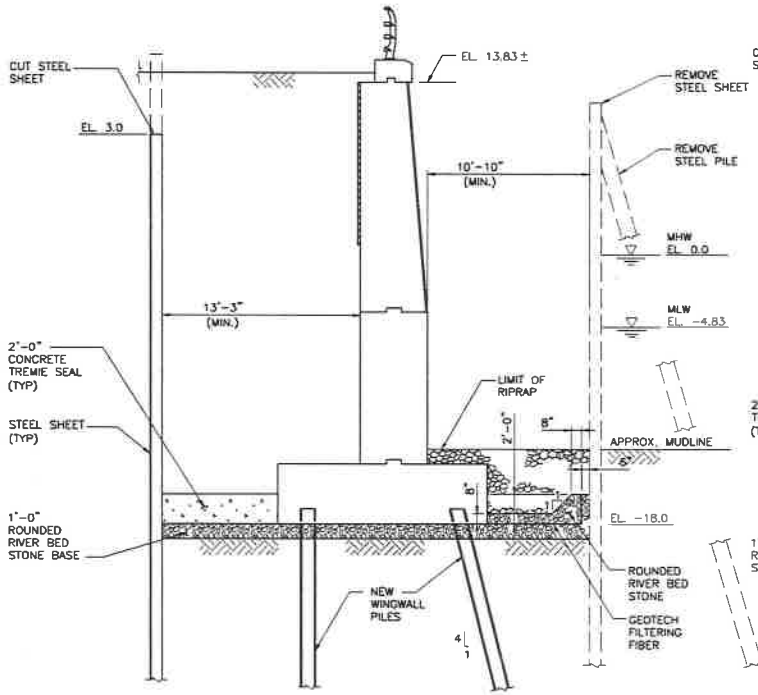

WINGWALL SECTION
SCALE 1/4"=1'-0"

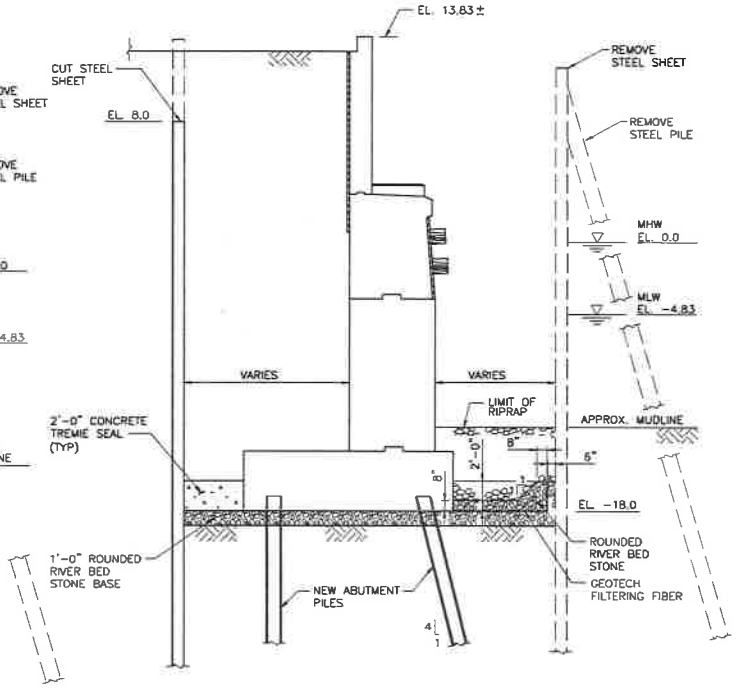

ABUTMENT SECTION
SCALE: 1/4"=1'-0"

SUGGESTED SEQUENCE OF CONSTRUCTION FOR ABUTMENT AND WINGWALL

1. CONSTRUCT REMAINDER OF ABUTMENT AND WINGWALL.
2. BACKFILL TO BOTTOM OF ROADWAY.
3. MAKE A 1'-0" DEEP ROUNDED RIVER STONE BASE. CONSTRUCT THE 2'-0" TREMIE SEAL ON BACK OF WALLS. INSTALL KATCHALL GEOTECH FIBER (OR APPROVED EQUAL) IN FRONT OF WALL AND INSTALL AS INDICATED IN THE PLANS.
3. REMOVE COFFERDAM. CUT SHEETING IN BACKSIDE OF WALL AND ABUTMENT TO ELEV. 8'±. REMOVE SHEETING AND STEEL PILES IN FRONT OF WALLS AND ABUTMENT.
4. AFTER STEEL SHEETS ARE PULLED CONTRACTOR SHALL MAKE RIPRAP ELEVATION MATCH THE EXISTING MUDLINE ELEVATION.

CITY OF NEW YORK
DEPARTMENT OF TRANSPORTATION
DIVISION OF BRIDGES

CONTRACT NO. **HBQ1162E**

EMERGENCY RECONSTRUCTION OF WEST ABUTMENT AND WINGWALLS OF BORDEN AVENUE BRIDGE OVER DUTCH KILLS

BOROUGH OF QUEENS B.I.N. 2-24041-0

CONSTRUCTION STAGING SECTION 5 [1]

DWG. NO.	SCALE	DATE	SHEET
S-359	AS NOTED	05/15/09	88

STV Incorporated
architects/engineers/planners/interior designers
225 Park Avenue South, New York, NY 10003

1/4"=1'-0" SCALE IN FEET 0 1' 2' 3' 4' 5' 6' 7' 8' 9'10'

PREPARED BY
IN CHARGE A.P.M. DRAFTER D.H.
DESIGNER CHECKER E.E.

N.Y.C. D.O.T. MICROFILM IDENTIFICATION NUMBER
BIN 2-24041-0 ROLL H02 FRAME

7/21/2009 I:\Projects\0201608\0201608_0001\70_Technical Documents Reports\72_Technical Reports\1606\Borden\Emergency Work\MF 03-09-09\Other Dwgs\S-359.dgn

Figure 4 – Temporary Sediment Staging Area

FED. RD. REG. NO.	STATE	FEDERAL AID PROJECT NO.	SHEET NO.	TOTAL SHEETS
	NEW YORK			XXX

EMERGENCY RECONSTRUCTION OF WEST ABUTMENT AND WINGWALLS OF BORDEN AVENUE BRIDGE OVER DUTCH KILLS

P.I.N. 84197MB983BR | QUEENS | B.I.N. 2-24041-0

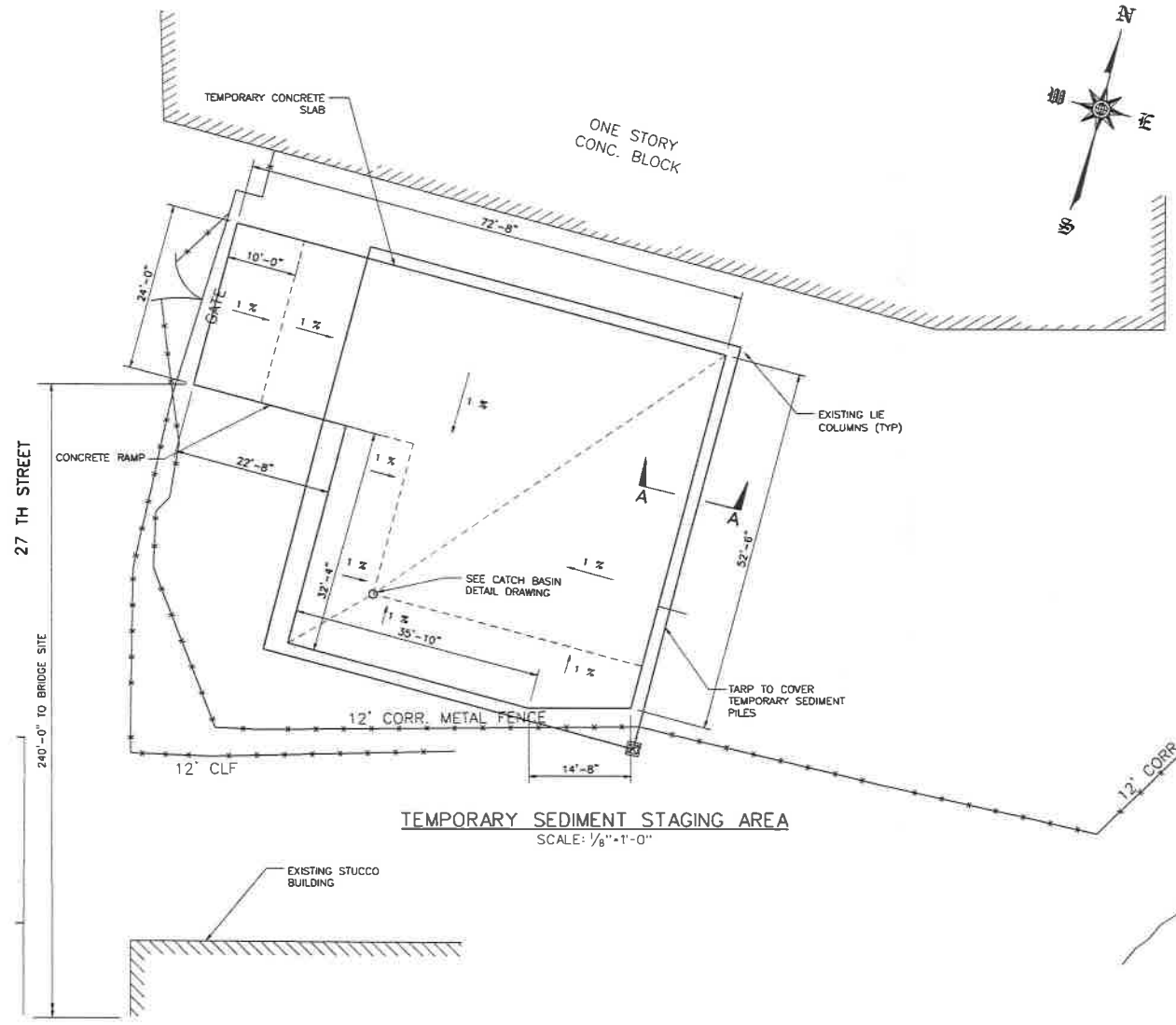

TEMPORARY SEDIMENT STAGING AREA

SCALE: 1/8"=1'-0"

NOTES:

1. SECTION A-A IS TYPICAL FOR THE PERIMETER OF SLAB, EXCEPT FOR THE RAMP ENTRANCE.
2. A TEMPORARY ASPHALT RAMP SHALL BE PROVIDED AT ENTRANCE OF RAMP TO PROVIDE TRUCK ACCESS TO THE TEMPORARY SLAB.
3. RUN OFF CONTAMINATED LIQUID IS TO BE PUMPED INTO 55 GALON DRUMS FOR TRANSPORT TO THE FILTERING SYSTEM.
4. THE AREA SHALL BE RETURNED TO ITS ORIGINAL STATE. ANY EXCAVATION SHALL BE FILLED TO ITS ORIGINAL ELEVATION. THE SLAB, TENT AND ANY OTHER ITEMS PERTAINING TO THIS TEMPORARY STAGING AREA SHALL BE DEMOLISHED OR REMOVED.

CITY OF NEW YORK
DEPARTMENT OF TRANSPORTATION
DIVISION OF BRIDGES

CONTRACT NO. HBQ1162E

EMERGENCY RECONSTRUCTION OF WEST ABUTMENT AND WINGWALLS OF BORDEN AVENUE BRIDGE OVER DUTCH KILLS

BORDOUGH OF QUEENS B.I.N. 2-24041-0

TEMPORARY STAGING SEDIMENT AREA

DWG. NO.	SCALE		SHEET
	AS NOTED		

SCALE IN FEET
1/8"=1'-0" 0 5' 10' 15' 20'

PREPARED BY
IN CHARGE _____ DRAFTER _____
DESIGNER _____ CHECKER _____

N.Y.C. D.O.T. MICROFILM IDENTIFICATION NUMBER
BIN 2-24041-0 ROLL H02 FRAME

7/22/2009 I:\Projects\0201600\0201600_0001\70_Technical Documents Reports\73_Technical Reports\1606\Borden\Emergency Work\WT 03-09-09\Other Dwgs\SedPlan.dgn

Figure 5 – Temporary Sediment Staging Area Cross Section

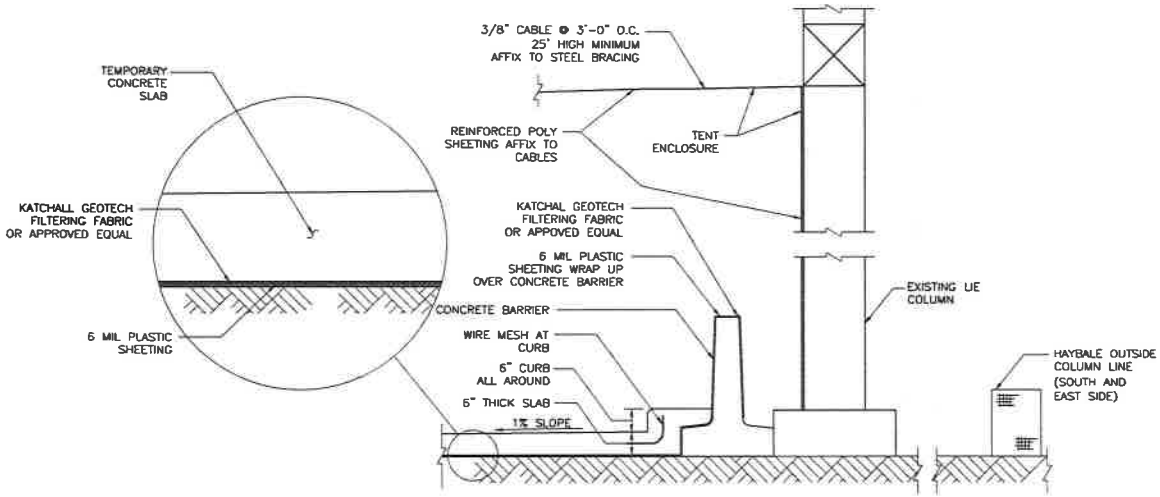

SECTION A-A

N.T.S.

Figure 6 – Sediment Staging Area Catch Basin Details

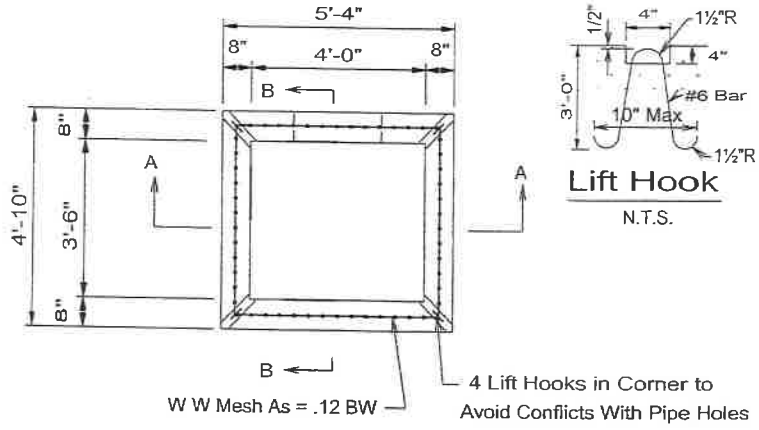

Plan

Lift Hook

N.T.S.

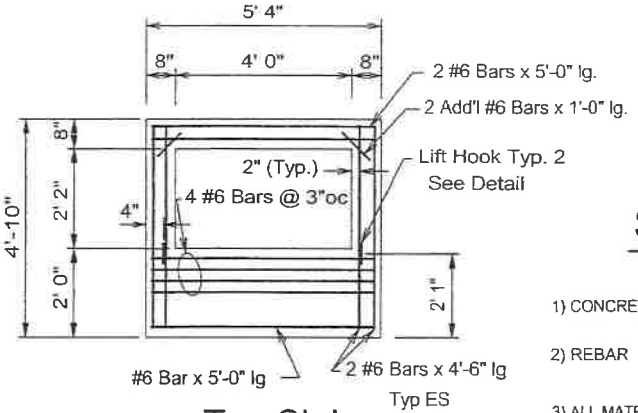

Top Slab

Precast Removable

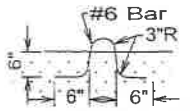

Lift Hook

Top Slab

N.T.S.

Specifications

1) CONCRETE 4000 PSI @28 DAYS W/ 5% AIR ENTRAINMENT

2) REBAR ASTM A-615 GRADE 60

3) ALL MATERIALS SHALL MEET THE REQUIREMENTS OF N.Y.C. D.D.C. October 1997

4) ALL OTHER DETAILS SUCH AS C.I. HOOD, CASTINGS,ETC. SHALL MEET NYC DDC SPECIFICATIONS AND ARE TO BE FURNISHED AND INSTALLED BY GENERAL CONTRACTOR.

5) LOCATION OF ANGLE BASIN CONNECTIONS MAY BE VARIED TO SUIT FIELD CONDITIONS

6) KEYED CONSTRUCTION JOINTS REQ;D BETWEEN SUCCESSIVE POURS.

7) PLACEMENT OF REINFORCEMENT TO BE CERTIFIED BY COMPANY OFFICER OR PROFESSIONAL ENGINEER.

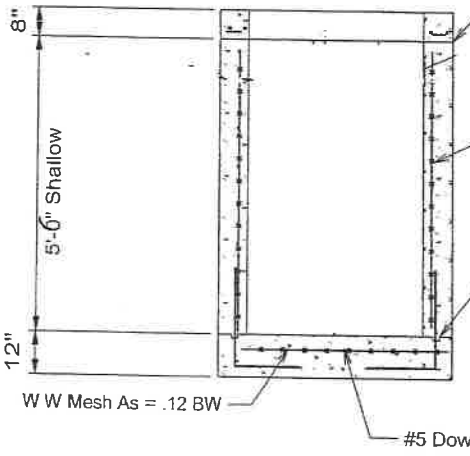

Section A-A

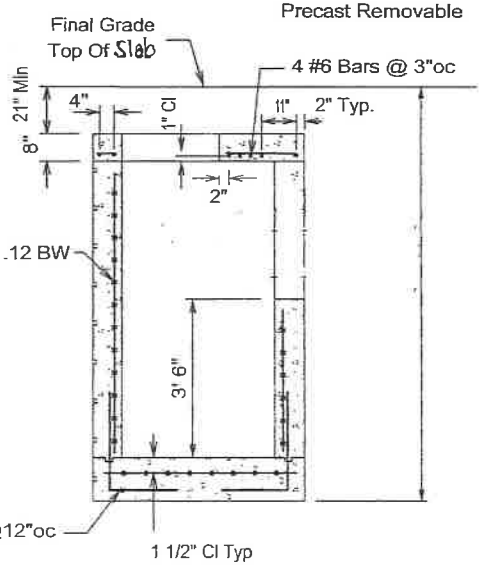

Section B-B

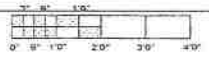

SCALE

Product: NYC DDC Type II Precast Catch Basin -			
scale	date	dwn. by	dwg. no.
As Noted			

TABLE 1 – NYSDEC SOIL EXCEEDENCES

Table 1

Soil Exceedences -
Borden Avenue Bridge
Over Dutch Kills
Long Island City, New York 11101

Sample ID			S-1		S-2	
Sampling Date			6/19/2009		6/19/2009	
Matrix			Soil		Soil	
Depth (feet)						
Units			(µg/Kg)		(µg/Kg)	
	NYSDEC Recommended Soil Cleanup Objective (µg/Kg)	NYSDEC (Part 375-6.8) Soil Cleanup Objective** (Track 1) (µg/Kg)				
VOCs						
Acetone	200	50	**210**	**J***	**340**	*
Methylene Chloride	100	50	**100**	**JB**	**98**	**JB**
Xylenes, Total	1,200	260	**300**		**90**	
SEMIVOLATILE COMPOUNDS						
Benzo[a]anthracene	224 or MDL	1,000	**6,200**	**J**	**8,900**	**J**
Chrysene	400	1,000	**6,900**	**J**	**9,200**	**J**
Bis(2-ethylhexyl) phthalate	50,000	NC	130,000		110,000	
Di-n-octyl phthalate	50,000	NC	ND		ND	
Benzo[b]fluoranthene	1,100 or MDL	1,000	**5,000**	**J**	**5,300**	**J**
Benzo[k]fluoranthene	1,100 or MDL	800	**1,900**	**J**	**1,800**	**J**
Benzo[a]pyrene	61 or MDL	1,000	**6,400**	**J**	**7,200**	**J**
Indeno[1,2,3-cd]pyrene	3,200	500	**14,000**		**14,000**	
Dibenz(a,h)anthracene	14 or MDL	330	**11,000**	**J**	**11,000**	**J**
PEST/ HERBICIDES						
4,4'-DDD	2,900	3.3	**310**		**120**	
4,4'-DDE	2,100	3.3	**130**		**66**	
4,4'-DDT	2,100	3.3	**410**	*	**260**	*
Aldrin	41	5	**6.4**	**J**	ND	
Dieldrin	44	5	**180**		**74**	
Endrin	100	14	**270**		**200**	
Heptachlor epoxide	20	NC	27		11	
PCBs						
Aroclor-1242	10,000	100	**590**		**720**	
Aroclor-1254	10,000	100	**520**		**1,100**	
Aroclor-1260	10,000	100	**760**		**890**	

Footnotes:

NYSDEC - New York State Department of Environmental Conservation.

USEPA - United States Environmental Protection Agency.

VOCs - Volatile Organic Compounds.

Table 1

Soil Exceedences -
Borden Avenue Bridge
Over Dutch Kills
Long Island City, New York 11101

SVOCs - Semi- Volatile Organic Compounds.

U - The compound was not detected at the indicated concentration.

J - Data indicates the presence of a compound that meets the identification criteria. The result is less than the quantitation limit but greater than zero. The concentration given is an approximate value.

B - The Analyte was found in an associate blank, as well as the sample.

SB - Site Background.

NC - No Criteria.

MDL - Method Detection Limit.

mg/Kg - milligrams per kilogram.

- Indicates an exceedance of NYSDEC

Table 1

Soil Exceedences -
Borden Avenue Bridge
Over Dutch Kills
Long Island City, New York 11101

Sample ID			S-1		S-2	
Sampling Date			6/19/2009		6/19/2009	
Matrix			Soil		Soil	
Depth (feet)						
Units			(µg/Kg)		(µg/Kg)	
	NYSDEC Recommended Soil Cleanup Objective (µg/Kg)	NYSDEC (Part 375-6.8) Soil Cleanup Objective** (Track 1) (µg/Kg)				
VOCs						
Acetone	200	50	**210**	**J***	**340**	*
Methylene Chloride	100	50	**100**	**JB**	**98**	**JB**
Xylenes, Total	1,200	260	**300**		**90**	
SEMIVOLATILE COMPOUNDS						
Benzo[a]anthracene	224 or MDL	1,000	**6,200**	**J**	**8,900**	**J**
Chrysene	400	1,000	**6,900**	**J**	**9,200**	**J**
Bis(2-ethylhexyl) phthalate	50,000	NC	130,000		110,000	
Di-n-octyl phthalate	50,000	NC	ND		ND	
Benzo[b]fluoranthene	1,100 or MDL	1,000	**5,000**	**J**	**5,300**	**J**
Benzo[k]fluoranthene	1,100 or MDL	800	**1,900**	**J**	**1,800**	**J**
Benzo[a]pyrene	61 or MDL	1,000	**6,400**	**J**	**7,200**	**J**
Indeno[1,2,3-cd]pyrene	3,200	500	**14,000**		**14,000**	
Dibenz(a,h)anthracene	14 or MDL	330	**11,000**	**J**	**11,000**	**J**
PEST/ HERBICIDES						
4,4'-DDD	2,900	3.3	**310**		**120**	
4,4'-DDE	2,100	3.3	**130**		**66**	
4,4'-DDT	2,100	3.3	**410**	*	**260**	*
Aldrin	41	5	**6.4**	**J**	ND	
Dieldrin	44	5	**180**		**74**	
Endrin	100	14	**270**		**200**	
Heptachlor epoxide	20	NC	27		11	
PCBs						
Aroclor-1242	10,000	100	**590**		**720**	
Aroclor-1254	10,000	100	**520**		**1,100**	
Aroclor-1260	10,000	100	**760**		**890**	

Footnotes:

NYSDEC - New York State Department of Environmental Conservation.

USEPA - United States Environmental Protection Agency.

VOCs - Volatile Organic Compounds.

Table 1

Soil Exceedences -
Borden Avenue Bridge
Over Dutch Kills
Long Island City, New York 11101

SVOCs - Semi- Volatile Organic Compounds.

U - The compound was not detected at the indicated concentration.

J - Data indicates the presence of a compound that meets the identification criteria. The result is less than the quantitation limit but greater than zero. The concentration given is an approximate value.

B - The Analyte was found in an associate blank, as well as the sample.

SB - Site Background.

NC - No Criteria.

MDL - Method Detection Limit.

mg/Kg - milligrams per kilogram.

- Indicates an exceedance of NYSDEC

TABLE 2- NYSDEC GROUNDWATER EXCEEDENCES

Table 2

Groundwater Exceedences -
Borden Avenue Bridge
Over Dutch Kills
Long Island City, New York 11101

Sample ID Sampling Date Matrix Units		W-Tank 6/19/2009 Aqueous (µg/L)		W-Exc 6/19/2009 Aqueous (µg/L)	
	NYSDEC TOGS Standards and Guidance Values (µg/L)				
SEMIVOLATILE COMPOUNDS (GC/MS)					
Benzo[a]anthracene	0.002	8.6	J	0.74	J
Chrysene	0.002	8.3	J	0.66	J
Bis(2-ethylhexyl) phthalate	5	290		17	
Benzo[b]fluoranthene	0.002	4.4	J	0.52	J
Benzo[k]fluoranthene	0.002	1.7	J	ND	
Indeno[1,2,3-cd]pyrene	0.002	4	J	0.92	J
PCBs					
Aroclor-1242	0.09*	1.6		ND	
Aroclor-1254	0.09*	2.3		ND	
Aroclor-1260	0.09*	2.2		ND	
METALS					
Antimony	3	16.2	J	ND	
Arsenic	25	25.8		7.3	J
Cadmium	5	13.1		ND	
Chromium	50	101		18.4	J
Copper	200	290		54.8	
Lead	25	280		47.0	
Nickel	100	126		30.0	

Footnotes (Groundwater):

NYSDEC - New York State Department of Environmental Conservation.
TOGS - Technical and Operational Guidance Series.
VOCs - Volatile Organic Compounds.
SVOCs - Semi- Volatile Organic Compounds.
U - The compound was not detected at the indicated concentration.
J - Data indicates the presence of a compound that meets the identification criteria. The result is less than the quantitation limit but greater than zero. The concentration given is an approximate value.
NC - No Criteria.
ug/L - micrograms per liter.
mg/L - milligrams per liter.
- Indicates an exceedance of TOGs.

APPENDIX A – ENVIRONMENTAL PERMITS

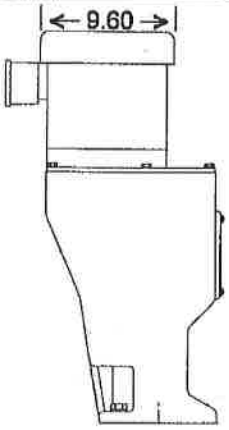

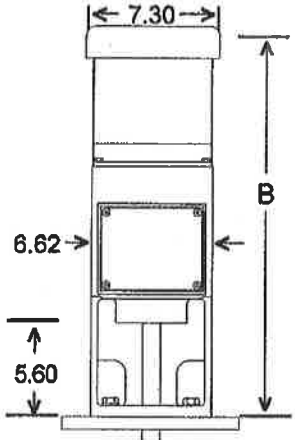

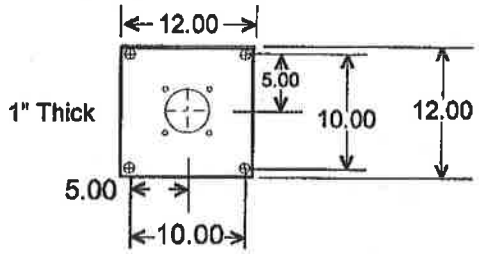

Baseplate Option

MODEL POG OPEN TANK

Model	HP	Motor RPM	Prop RPM	B	Approx. Wt. (In lbs.)
POG-14	1/4	1750	350	22.9	125
POG-13	1/3	1750	350	22.9	128
POG-12	1/2	1750	350	22.9	130
POG-34	3/4	1750	350	25.1	132
POG-11	1	1750	350	25.1	132
POG-15	1 1/2	1750	350	25.1	142
POG-2	2	1750	350	27.8	154

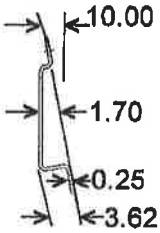

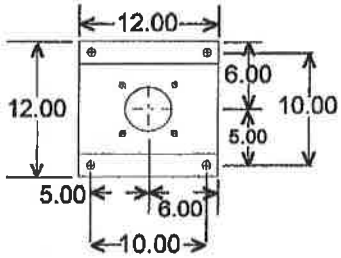

Angle Riser Option

MODEL DESIGNATIONS:

POG – Fixed Mount, Gear Drive, Open Tank
PSG – Seal, Fixed Mount, Gear Drive, Closed Tank
PMG – Mechanical Seal, Fixed mount, Gear Drive, Closed Tank

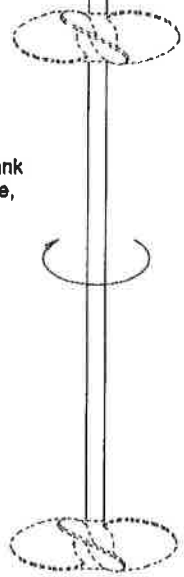

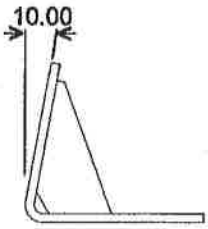

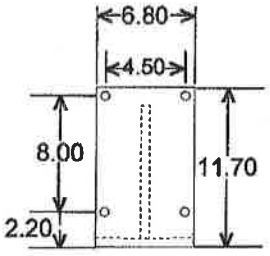

Wall Mount Option

Copyright ©2005 Philadelphia Mixing Solutions

Series JG
Gear Drive Mixer, Clamp or Cup Plate Mount
Heavy Helical Gear, 350 rpm, Grease Lube

Neptune's most powerful mixers for the most difficult mixing applications. Grease filled gearbox eliminates oil seal and the possibility of oil contamination of process.

Features

- No clutches to slip, wear or replace.
- 316SS propellers and shafts are standard. Optional coatings such as rubber, PVC or Teflon® also available.
- Square pitch 1.0 ratio marine propellers are used exclusively. Flow coefficients and power consumption characteristics equal those of the best hydrofoil impeller designs.
- Vibration-absorbing pad standard.
- Motors are available in TEFC or explosion-proof enclosures (1750 rpm, 56C frame). Air motors also available.
- Gears run in grease lubrication. Cannot leak oil.
- All JG mixer shaft bearings are permanently lubricated.
- Variable speed drives also available.
- Cast aluminum housing.
- Mounting clamp has adjustable angle of entry by indexed ball-and-socket design to achieve various process results.
- Fixed cup plate mount optional on 1/3 HP through 1½ HP. Standard on 2 HP and larger models.

Model Number	Standard Motor Description	A Shaft Length	B	C		D Shaft Diameter
				Single	Dual	
Totally-enclosed fan-cooled (TEFC)						
JG-2.0	1/3 HP-1-115/230	48"	17⅝"	10"	8"	¾"
JG-2.1	1/3 HP-3-230/460	48"	17⅜"	10"	8"	¾"
JG-3.0	1/2 HP-1-115/230	48"	18½"	12"	10"	¾"
JG-3.1	1/2 HP-3-230/460	48"	17⅝"	12"	10"	¾"
JG-4.0	3/4 HP-1-115/230	60"	18⅜"	13"	11"	¾"
JG-4.1	3/4 HP-3-230/460	60"	18⅛"	13"	11"	¾"
JG-5.1	1 HP-3-230/460	60"	18⅜"	14"	12"	1"
JG-6.1	1½ HP-3-230/460	60"	18¾"	15"	13"	1"
JG-7.1	2 HP-3-230/460	60"	20⅝"	16"	14"	1¼"
JG-8.1	3 HP-3-230/460	72"	21⅝"	16"	15"	1¼"
Explosion-proof class 1 group D (EP)						
JG-2.2	1/3 HP-1-115/230	48"	20½"	10"	8"	¾"
JG-2.3	1/3 HP-3-230/460	48"	17⅜"	10"	8"	¾"
JG-3.2	1/2 HP-1-115/230	48"	21"	12"	10"	¾"
JG-3.3	1/2 HP-3-230/460	48"	19⅝"	12"	10"	¾"
JG-4.2	3/4 HP-1-115/230	60"	21½"	13"	11"	¾"
JG-4.3	3/4 HP-3-230/460	60"	19⅝"	13"	11"	¾"
JG-5.3	1 HP-3-230/460	60"	20½"	14"	12"	1"
JG-6.3	1½ HP-3-230/460	60"	20½"	15"	13"	1"
JG-7.3	2 HP-3-230/460	60"	22⅛"	16"	14"	1¼"
Air motor						
JG-3.4	1/3 HP to 1/2 HP AIR Air Requirements: 12-20CFM at 40-80PSI	48"	17⅛"	12"	10"	¾"
JG-4.4	3/4 HP AIR Air Requirements: 30CFM at 60PSI	60"	18"	13"	11"	¾"
JG-5.4	1 HP AIR Air Requirements: 40CFM at 40PSI	60"	19⅛"	14"	12"	1"
JG-6.4	1½ HP AIR Air Requirements: 55CFM at 60PSI	60"	19⅛"	15"	13"	1"
JG-7.4	2 HP AIR Air Requirements: 65CFM at 70PSI	60"	15¾"	16"	14"	1¼"
JG-8.4	4 HP AIR Air Requirements: 125CFM at 90PSI	72"	16¾"	16"	15"	1¼"

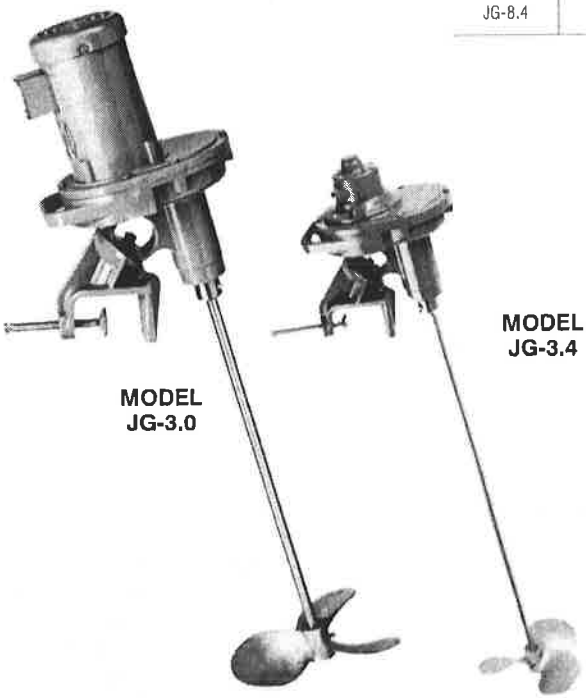

MODEL JG-3.0

MODEL JG-3.4

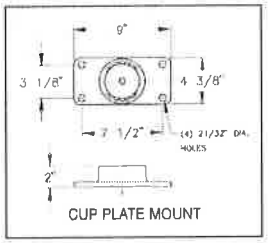

CUP PLATE MOUNT

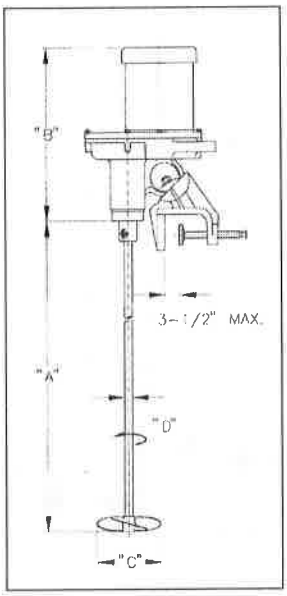

B731-468SI

Data Sheet

Series B
Electronic Metering Pumps

Configuration

Model B92 | 1 | - | 392SI

Control & Output Code

Manual Control
Speed (stroking frequency) and stroke length manually adjustable

B11 ---	1.6 GPH	(6.1 l/h) ---	150 psi (10.30 Bar)
B12 ---	2.5 GPH	(9.5 l/h) ---	100 psi (6.90 Bar)
B13 ---	4.5 GPH	(17.0 l/h) ---	50 psi (3.50 Bar)
B14 ---	7.0 GPH	(26.5 l/h) ---	30 psi (2.07 Bar)

Instrument Responsive / Manual Control
Manual adjustment features of Series B1 plus switch conversion to external control for automatic systems.

B71 ---	1.6 GPH	(6.1 l/h) ---	150 psi (10.30 Bar)
B72 ---	2.5 GPH	(9.5 l/h) ---	100 psi (6.90 Bar)
B73 ---	4.5 GPH	(17.0 l/h) ---	50 psi (3.50 Bar)
B74 ---	7.0 GPH	(26.5 l/h) ---	30 psi (2.07 Bar)
B91 ---	1.6 GPH	(6.1 l/h) ---	150 psi (10.30 Bar)
B92 ---	2.5 GPH	(9.5 l/h) ---	100 psi (6.90 Bar)
B93 ---	4.5 GPH	(17.0 l/h) ---	50 psi (3.50 Bar)
B94 ---	7.0 GPH	(26.5 l/h) ---	30 psi (2.07 Bar)

Voltage Code

1 ---------	120 VAC, US Plug
2 ---------	240 VAC, US Plug
3 ---------	220-240 VAC, DIN Plug
5 ---------	240-250 VAC, UK Plug
6 ---------	240-250 VAC, AUST/NZ Plug
7 ---------	220-240 VAC, SWISS Plug

Liquid End

See next page for complete Liquid End specifications and selection.

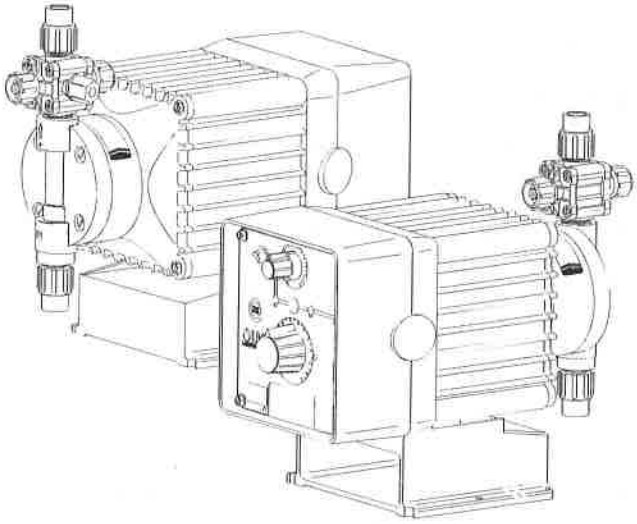

Dimensions

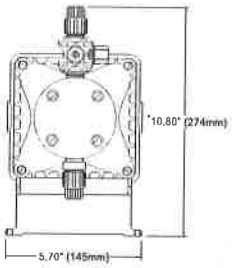

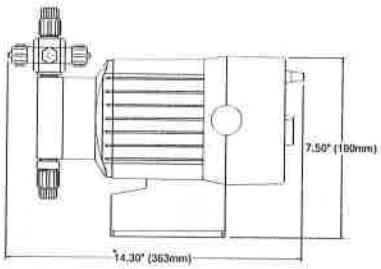

*DIMENSIONS SHOWN ARE MAXIMUM FOR LARGEST LIQUID END AVAILABLE. THESE DIMENSIONS VARY DEPENDING ON THE LIQUID END SELECTED.

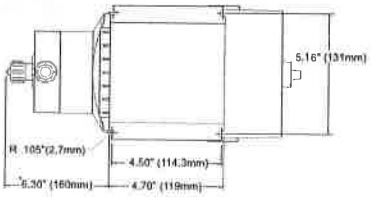

Specifications

Series	Strokes Per Minute (Adjustable) Min	Max	Stroke Length (Adjustable) Recommended Minimum	Average Input Power @ Max Speed	Shipping Weight
B11, B71, B91† B12, B72, B92† B13, B73, B93† B14, B74, B94†	1	100	10%	29 watts	15 lbs (6.9 kg)

† Series B9 pumps may be programmed for strokes per hour for lower outputs.

LMI MILTON ROY

8 Post Office Square
Acton, MA 01720 USA
TOLL FREE: (800) 564-1097
TEL: (978) 263-9800
FAX: (978) 264-9172
http://www.lmipumps.com

Replaces same of Rev. G 2/98
1417. H 4/02

Configuration Data & Materials of Construction

Drive Assembly	Liquid End No.	Size Code	Materials of Construction				Accessory	Tubing & Connections	
			Head & Fittings	Balls	Liquifram™	Check Valve		Discharge	Suction
	498SI†	0.9	PVC / PVC	Ceramic	Fluorofilm™	PVDF / Polyprel®	4FV	PE .375" O.D.	
B92 ■ -	490SI†	0.9	Acrylic / PVC	Ceramic	Fluorofilm™	PVDF / Polyprel®	4FV	PE .375" O.D.	
B91 ■ -	490FI	0.9	Acrylic / PVDF	Ceramic	Fluorofilm™	PVDF / Polyprel®	4FV	PE .375" O.D.	
B72 ■ -	398SI†	0.9	PVC / PVC	Ceramic	Fluorofilm™	PVDF / Polyprel®	4FV	PE .375" O.D.	
B71 ■ -	393SI†	0.9	PVDF / PVDF	Ceramic	Fluorofilm™	PVDF / PTFE	4FV	PE .375" O.D.	
B12 ■ -	392SI†	0.9	PVDF / PVDF	Ceramic	Fluorofilm™	PVDF / Polyprel®	4FV	PE .375" O.D.	
B11 ■ -	85HV	0.9	Polypropylene	316 S.S.	Fluorofilm™	PTFE		PE .5" O.D.	Vinyl .938" O.D.
	86HV	0.9	Acrylic / PP	316 S.S.	Fluorofilm™	Hypalon®		PE .5" O.D.	Vinyl .938" O.D.
	89	0.9	UHMW PE	Ceramic	Hypalon®	Hypalon®		PE .5" O.D.	Vinyl .500" O.D.
	95S**	0.9	Polypropylene	Ceramic	Fluorofilm™	PTFE	4FV	PE .375" O.D.	
	297	0.9	316 S.S.	316 S.S.	Fluorofilm™	316 S.S.		Pipe 1/4" NPT M	
	468SI†	1.8	PVC / PVC	Ceramic	Fluorofilm™	PVDF / Polyprel®	4FV	PE .375" O.D.	
	460SI†	1.8	Acrylic / PVC	Ceramic	Fluorofilm™	PVC / Polyprel®	4FV	PE .375" O.D.	
	460FI	1.8	Acrylic / PVDF	Ceramic	Fluorofilm™	PVDF / Polyprel®	4FV	PE .375" O.D.	
	368SI†	1.8	PVC / PVC	Ceramic	Fluorofilm™	PVC / Polyprel®	4FV	PE .375" O.D.	
	363SI†	1.8	PVDF / PVDF	Ceramic	Fluorofilm™	PVDF / PTFE	4FV	PE .375" O.D.	
B93 ■ -	362SI†	1.8	PVDF / PVDF	Ceramic	Fluorofilm™	PVDF / Polyprel®	4FV	PE .375" O.D.	
B73 ■ -	75HV	1.8	Polypropylene	316 S.S.	Fluorofilm™	PTFE		PE .5" O.D.	Vinyl .938" O.D.
B13 ■ -	75S**	1.8	Polypropylene	Ceramic	Fluorofilm™	PTFE	4FV	PE .5" O.D.	
	76HV	1.8	Acrylic / PP	316 S.S.	Fluorofilm™	Hypalon®		PE .5" O.D.	Vinyl .938" O.D.
	79	1.8	UHMW PE	Ceramic	Hypalon®	Hypalon®		PE .5" O.D.	Vinyl .500" O.D.
	277	1.8	316 S.S.	316 S.S.	Fluorofilm™	316 S.S.		Pipe 1/4" NPT M	
	418SI†	3.0	PVC / PVC	Ceramic	Fluorofilm™	PVC / Polyprel®	4FV	PE .5" O.D.	
	410SI†	3.0	Acrylic / PVC	Ceramic	Fluorofilm™	PVC / Polyprel®	4FV	PE .5" O.D.	
	410FI	3.0	Acrylic / PVDF	.375 PTFE	Fluorofilm™	PVDF / Polyprel®	4FV	PE .5" O.D.	
	318SI†	3.0	PVC / PVC	Ceramic	Fluorofilm™	PVC / Polyprel®	4FV	PE .5" O.D.	
B94 ■ -	312SI†	3.0	PVDF / PVDF	Ceramic	Fluorofilm™	PVDF / Polyprel®	4FV	PE .5" O.D.	
B74 ■ -	313SI†	3.0	PVDF / PVDF	Ceramic	Fluorofilm™	PVDF / PTFE	4FV	PE .5" O.D.	
B14 ■ -	15S**	3.0	Polypropylene	Ceramic	Fluorofilm™	PTFE	4FV	PE .5" O.D.	
	217	3.0	316 S.S.	316 S.S.	Fluorofilm™	316 S.S.		Pipe 1/4" NPT M	

■ See front page for voltage code specifications.

** These Liquid Ends are available without a 4FV.

† To specify ¼" NPT male, change 'I' to 'P'. To specify black, UV resistant tubing, change 'I' to 'U'. To specify Bleed 4FV, change 'S' to 'B'. To specify 3FV, change 'S' to'T'.

3FV Indicates that the pump is equipped with an LMI Three Function Valve (pressure relief, priming aid, line drain).

4FV Indicates that the pump is equipped with an LMI Four Function Valve. This diaphragm type anti-syphon/pressure relief valve is installed on the pump head. It provides anti-syphon protection and aids in priming, even under pressure.

Fluorofilm™ is a copolymer of PTFE and PFA.
Polyprel® is an elastomeric PTFE copolymer.

Polyprel is a registered trademark of Liquid Metronics Incorporated. Fluorofilm is a trademark of Liquid Metronics Incorporated. Hypalon is a registered trademark of E. I. du Pont de Nemours & Co., Inc.

Output Information

Series	Gallons per Hour* Min	Max	Liters per Hour* Min	Max	mL/cc per Minute* Min	Max	mL/cc per Stroke Min	Max	Maximum Injection Pressure
B11, B71, B91†	0.002	1.6	0.006	6.1	0.10	101	0.10	1.01	150 psi (10.30 Bar)
B12, B72, B92†	0.003	2.5	0.009	9.5	0.16	158	0.16	1.58	100 psi (6.90 Bar)
B13, B73, B93†	0.005	4.5	0.017	17.0	0.28	284	0.28	2.84	50 psi (3.50 Bar)
B14, B74, B94†	0.007	7.0	0.027	26.5	0.44	442	0.44	4.42	30 psi (2.07 Bar)

*Minimum output is based on one (1) stroke per minute and 10% stroke setting, minimum output can be reduced further in external mode.

†Series B9 pumps may be programmed for strokes per hour for lower outputs.

© 2002 LMI Milton Roy - All Rights Reserved
Printed in USA
Specifications subject to change without notice.

Specification **Sheet**

Series B

GENERAL

Chemical metering pumps shall be positive displacement, Liquifram™ type pumps that are UL and CUL approved. Output volume shall be adjustable while pumps are in operation from zero to maximum capacity of:

B11, B71, B91 - 1.6 GPH (6.1 liters per hour)
B12, B72, B92 - 2.5 GPH (9.5 liters per hour)
B13, B73, B93 - 4.5 GPH (17.0 liters per hour)
B14, B74, B94 - 7.0 GPH (26.5 liters per hour)

Chemical metering pumps shall be capable, without a hydraulically backed diaphragm, of injecting solutions against pressures up to:

B11, B71, B91 - 150 psig(10.3 bar)
B12, B72, B92 - 100 psig(6.9 bar)
B13, B73, B93 - 50 psig(3.4 bar)
B14, B74, B94 - 30 psig(2.1 bar)

SERIES B1

Adjustment shall be by means of readily accessible dial knobs, one for changing stroke length and the other for changing stroke frequency. Both knobs are to be located opposite the liquid handling end.

SERIES B7

Control of Series B7 metering pumps shall be selectable between internal and external pulsing by means of a 3-position center-off switch. Stroke length shall be adjustable by means of readily accessible dial knob. When in external pulsed mode, Series B7 units shall accept signals without the use of electrical timer or internal timer. Pressure capacity shall be adjustable to reduce noise, vibration and wear.

SERIES B9

Series B9 metering pumps shall have a clear liquid crystal display. Control shall be selectable between internal and external pulsing by means of a tactile keypad. Internal stroke frequency shall be adjustable from 1 stroke per hour to 100 strokes per minute. Pressure capacity shall be keypad adjustable to reduce noise, vibration and wear. Metering pump shall be capable of dividing or multiplying pulse inputs from 1 to 999 or responding directly or inversely to a 4-20mA input signal.

DRIVE

The pump drive shall be totally enclosed with no exposed moving parts. Solid state electronic pulser shall be fully encapsulated and supplied with quick connect terminals at least 3/16" (4.75 mm) wide. Electronics shall be housed in chemical resistant enclosure at the rear of the pump for maximum protection against chemical spillage. Electrical power consumption shall not exceed 29 watts per hour under full speed and maximum pressure conditions. Pump weight shall not exceed 15 lbs (6.9 kg).

AUTOMATIC PRESSURE RELIEF

To eliminate need for pressure relief valve, Liquifram™ shall automatically stop pulsating when discharge pressure exceeds pump pressure rating by not more than 35%.

MATERIAL

Chemical metering pump housing shall be of chemically resistant glass fiber reinforced thermoplastic. All exposed fasteners shall be stainless steel. Chemical metering pump valves shall be ball type, with ceramic balls[1]. Valve seat and seal ring shall be renewable by replacing the combination seat-seal ring[2] or cartridge valve assembly. Pump head shall be of transparent acrylic[3] material capable of resisting the pumped chemical. Fittings and connections at pump head shall be PVC[4].

CHECK VALVES AND TUBING

A total of 16 ft (4.8 m) of polyethylene tubing[5] shall be provided per pump complete with compression connections. A foot valve with integral one piece strainer shall be provided for the suction line, and an injection/back pressure check valve with ½" NPT male connection for the injection point. The injection check valve shall incorporate a dilating orifice which prohibits scale formation and accumulation of crystalline deposits.

Notes:

1. Type 316 stainless steel or PTFE may be specified.
2. Hypalon®, PTFE or Polyprel® may be specified.
3. PVDF, PVC, Polypropylene, or Type 316 stainless steel may be specified.
4. PVDF, Polypropylene, or Type 316 stainless steel may be specified.
5. 6 ft (1.8 m) of vinyl suction tubing may be specified in place of polyethylene for the suction side only. 1/4" or 1/2" pipe thread may be specified.

LMI MILTON ROY

8 Post Office Square
Acton, MA 01720 USA
TEL: (978) 263-9800
FAX: (978) 264-9172
http://www.lmipumps.com

ISO9001

Replaces same of Rev. F 7/96
1034. G 12/99

B Series

LE Codes	W	X	Y	Z
71T, 72T, 75T, 81T, 82T, 85T	3.25 (82.5mm)	8.5 (216.0mm)	.65 (16.5mm)	10.70 (271.8mm)
71S, 72S, 75S 81S, 82S, 85S	4.55(115.6mm)	9.7 (246.5mm)	.65 (16.5mm)	12.00 (304.8mm)
74, 94	3.25 (82.5mm)	8.5 (216.0mm)	.65 (16.5mm)	10.70 (271.8mm)
76, 86	3.55 (90.2mm)	9.5 (241.3mm)	.65 (16.5mm)	11.00 (279.4mm)
77, 97	3.25 (82.5mm)	8.5 (216.0mm)	.65 (16.5mm)	10.70 (271.8mm)
91T, 92T, 95T	3.25 (82.5mm)	8.5 (216.0mm)	.65 (16.5mm)	10.70 (271.8mm)
91S, 91FS 92S, 95S	4.55(115.6mm)	9.7 (246.5mm)	.65 (16.5mm)	12.00 (304.8mm)

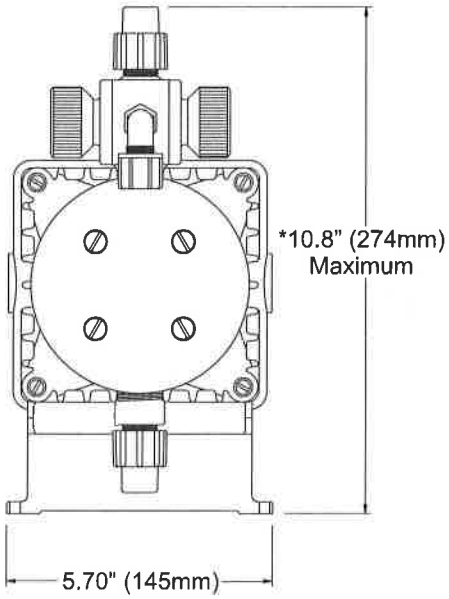

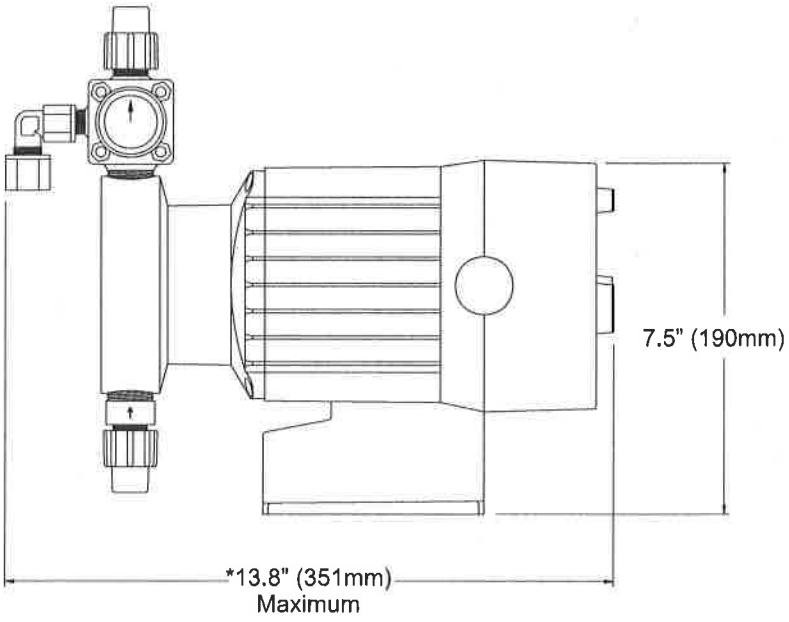

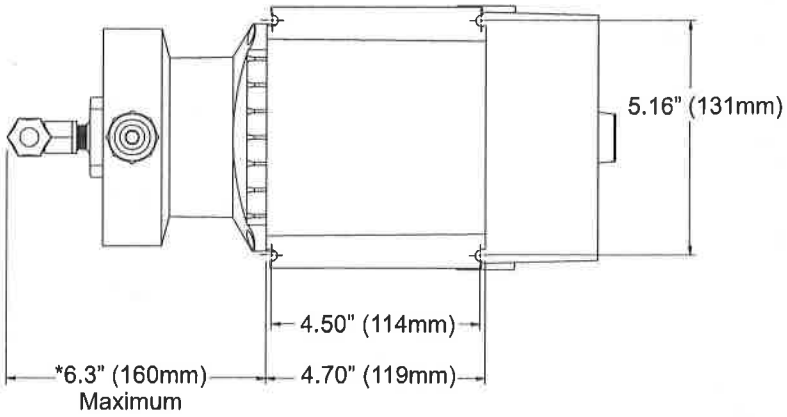

*Dimensions shown are maximum for largest liquid end available.These dimensions vary depending on the liquid end selected.

© 1999 LMI Milton Roy - All Rights Reserved
Printed in USA
Specifications subject to change without notice.

Polyprel is a registered trademark of Liquid Metronics Incorporated.
Liquifram, Liquitron, Micropace are trademarks of Liquid Metronics Incorporated.
Hypalon and Viton are registered trademarks of E. I. du Pont de Nemours & Co., Inc.

Data Sheet

Series C
Electronic Metering Pumps

Configuration Data

Model C92 1 - 363SI

Control & Output Code

Manual Control

Speed (stroking frequency) and stroke length manually adjustable.

C10 — 1.3 GPH (4.9 l/h) ... 300 psi (20.7 Bar)
C11 — 2.5 GPH (9.5 l/h) ... 150 psi (10.3 Bar)
C12 — 4.0 GPH (15.1 l/h) ... 100 psi (6.9 Bar)
C13 — 8.0 GPH (30 l/h) ..... 60 psi (4.1 Bar)
C14 — 20 GPH (76 l/h) ..... 25 psi (1.7 Bar)

Instrument Responsive/Manual Control

Manual adjustment features of C1 Series plus switch conversion to external control for automatic systems.

C70 — 1.3 GPH (4.9 l/h) ... 300 psi (20.7 Bar)
C71 — 2.5 GPH (9.5 l/h) ... 150 psi (10.3 Bar)
C72 — 4.0 GPH (15.1 l/h) ... 100 psi (6.9 Bar)
C73 — 8.0 GPH (30 l/h) ..... 60 psi (4.1 Bar)
C74 — 20 GPH (76 l/h) ..... 25 psi (1.7 Bar)
C76 — 4.0 GPH (15.1 l/h) .... 175 psi (12.1 Bar)
C77 — 10 GPH (38 l/h) ..... 80 psi (5.5 Bar)
C78 — 25 GPH (95 l/h) ..... 30 psi (2.07 Bar)
C90 — 1.3 GPH (4.9 l/h) .... 300 psi (20.7 Bar)
C91 — 2.5 GPH (9.5 l/h) .... 150 psi (10.3 Bar)
C92 — 4.0 GPH (15.1 l/h) .... 100 psi (6.9 Bar)
C93 — 8.0 GPH (30 l/h) ..... 60 psi (4.1 Bar)
C94 — 20 GPH (76 l/h) ..... 25 psi (1.7 Bar)

Voltage Code

1 — 120 VAC US Plug
2 — 240 VAC US Plug
3 — 220-240 VAC DIN Plug
5 — 240-250 VAC, UK Plug
6 — 240-250 VAC, AUST/NZ Plug
7 — 220-240 VAC, SWISS Plug

Liquid End

See next page for complete liquid end specifications and selection.

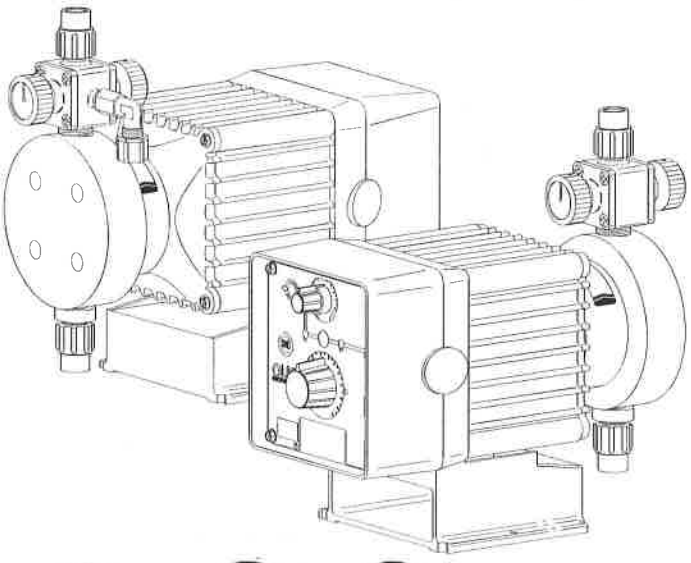

Specifications

Series	Strokes Per Minute (Adjustable) Min	Max	Stroke Length (Adjustable) Recommended Minimum	Average Input Power @Max Speed	Shipping Weight
C10, C70, C90 C11, C71, C91 C12, C72, C92 C13, C73, C93 C14, C74, C94	1	100	10%	44 watts	20 lbs (9.1 kg)
C76 C77 C78	1	100	10%	87 watts	28 lbs (12.7 kg)

Dimensions

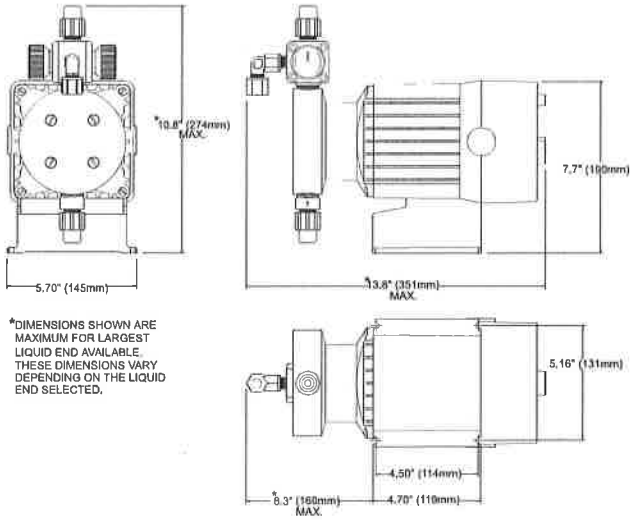

*DIMENSIONS SHOWN ARE MAXIMUM FOR LARGEST LIQUID END AVAILABLE. THESE DIMENSIONS VARY DEPENDING ON THE LIQUID END SELECTED.

LMI MILTON ROY

Florida Water Processing
http://www.watertreatmentsupply.com
800-783-4397

Polypre® is a registered trademark of Liquid Metronics Incorporated. Flourofilm and Liquifram are trademarks of Liquid Metronics Incorporated.
Hypalon and Viton are registered trademarks of E. I. du Pont de Nemours & Co., Inc.
© 2001 LMI Milton Roy - All Rights Reserved
Printed in USA

Replaces same of Rev.D 10/99
1712.E 11/01

Configuration Data & Materials of Construction

Drive Assembly	Liquid End No.	Size Code	Materials of Construction: Head & Fittings	Balls	Liquifram™	Check Valve	Accessory	Tubing & Connections: Discharge	Suction
C90 ▩ -	498SP	0.9	PVC	Ceramic	Fluorofilm™	PTFE	4FV	Pipe 1/4" NPT M	
C70 ▩ -	297	0.9	316 S.S.	316 S.S.	Fluorofilm™	316 S.S.		Pipe 1/4" NPT M	
C10 ▩ -									
	468SI	1.8	PVC / PVC	Ceramic	Fluorofilm™	PVDF / Polyprel®	4FV	PE .375" O.D.	
	460SI†	1.8	Acrylic / PVC	Ceramic	Fluorofilm™	PVDF / Polyprel®	4FV	PE .375" O.D.	
	460FI	1.8	Acrylic / PVC	PTFE	Fluorofilm™	PVDF / Polyprel®	4FV	PE .375 O.D.	
	368SI†	1.8	PVC / PVC	Ceramic	Fluorofilm™	PVDF / Polyprel®	4FV	PE .375" O.D.	
C92 ▩ -	362SI†	1.8	PVDF / PVDF	Ceramic	Fluorofilm™	PVDF / Polyprel®	4FV	PE .375" O.D.	
C91 ▩ -	363SI†	1.8	PVDF / PVDF	Ceramic	Fluorofilm™	PVDF / PTFE	4FV	PE .375" O.D.	
C72 ▩ -	75HV	1.8	Polypropylene	316 S.S.	Fluorofilm™	PTFE		PE .5" O.D.	Vinyl .938" O.D.
C71 ▩ -	75S*	1.8	Polypropylene	Ceramic	Fluorofilm™	PTFE	4FV	PE .5" O.D.	
C12 ▩ -	76HV	1.8	Acrylic/PP	316 S.S.	Fluorofilm™	Hypalon®		PE .5" O.D.	Vinyl .938" O.D.
C11 ▩ -	79	1.8	UHMW PE	Ceramic	Hypalon®	Hypalon®		PE .5" O.D.	Vinyl .5" O.D.
	277	1.8	316 S.S.	316 S.S.	Fluorofilm™	316 S.S.		Pipe 1/4" NPT M	
	418SI#	3.0	PVC / PVC	Ceramic	Fluorofilm™	PVDF / Polyprel®	4FV	PE .5" O.D.	
	410SI†#	3.0	Acrylic / PVC	Ceramic	Fluorofilm™	PVDF / Polyprel®	4FV	PE .5" O.D.	
	410FI†#	3.0	Acrylic / PVC	PTFE	Fluorofilm™	PVDF / Polyprel®	3FV	PE .5" O.D.	
C93 ▩ -	318SI†#	3.0	PVC / PVC	Ceramic	Fluorofilm™	PVDF / Polyprel®	4FV	PE .5" O.D.	
C73 ▩ -	313SI†#	3.0	PVDF / PVDF	Ceramic	Fluorofilm™	PVDF / PTFE	4FV	PE .5" O.D.	
C13 ▩ -	312SI†#	3.0	PVDF / PVDF	Ceramic	Fluorofilm™	PVDF / Polyprel®	4FV	PE .5" O.D.	
	20HV	3.0	Acrylic / PP	316 S.S.	Fluorofilm™	Hypalon®		PE .5" O.D.	Vinyl .938" O.D.
	22	3.0	PVDF	Ceramic	Fluorofilm™	PTFE		PE .5" O.D.	
	22P	3.0	PVDF	Ceramic	Fluorofilm™	PTFE		Pipe 1/2" NPT M	
	24	3.0	PVC	Ceramic	Fluorofilm™	PTFE		Pipe 1/2" NPT M	
	25HV	3.0	Polypropylene	316 S.S.	Fluorofilm™	PTFE		PE .5" O.D.	Vinyl .938" O.D.
	25P	3.0	Polypropylene	Ceramic	Fluorofilm™	PTFE		Pipe 1/2" NPT M	
	25T	3.0	Polypropylene	Ceramic	Fluorofilm™	PTFE		PE .5" O.D.	
	27	3.0	316 S.S.	316 S.S.	Fluorofilm™	PTFE		Pipe 1/2" NPT M	
	29	3.0	UHMW PE	Ceramic	Fluorofilm™	Hypalon®		PE .5" O.D.	
	30	6.0	Acrylic/PVC	Ceramic	Fluorofilm™	PTFE		PE .5" O.D	Vinyl .5" O.D.
	32	6.0	PVDF	Ceramic	Fluorofilm™	PTFE		PE .5" O.D.	
C94 ▩ -	32P	6.0	PVDF	Ceramic	Fluorofilm™	PTFE		Pipe 1/2" NPT M	
C78 ▩ -	34	6.0	PVC	Ceramic	Fluorofilm™	PTFE		Pipe 1/2" NPT M	
C74 ▩ -	35P	6.0	Polypropylene	Ceramic	Fluorofilm™	PTFE		Pipe 1/2" NPT M	
C14 ▩ -	35T	6.0	Polypropylene	Ceramic	Fluorofilm™	PTFE		PE .5" O.D.	
	36	6.0	PVC	Ceramic	Fluorofilm™	PTFE		PE .5" O.D.	
	37	6.0	316 S.S.	316 S.S.	Fluorofilm™	PTFE		Pipe 1/2" NPT M	
	468SP	1.8	PVC/PVC	Ceramic	Fluorofilm™	PVDF / Polyprel®	4FV	PE .375" O.D.	
C76 ▩ -	74S	1.8	Polypropylene	Ceramic	Fluorofilm™	PTFE	4FV	Pipe 1/4" NPT M	
	277	1.8	316 S.S.	316 S.S.	Fluorofilm™	316 S.S.		Pipe 1/4" NPT M	
	20HV	3.0	Acrylic/PP	316 S.S.	Fluorofilm™	Hypalon®		PE .5" O.D.	Vinyl .938" O.D.
	20S**	3.0	Acrylic/PVC	Ceramic	Fluorofilm™	Hypalon®	4FV	PE .5" O.D.	Vinyl .5" O.D.
	22	3.0	PVDF	Ceramic	Fluorofilm™	PTFE		Pipe 1/2" NPT M	
	22P	3.0	PVDF	Ceramic	Fluorofilm™	PTFE	4FV	Pipe 1/2" NPT M	
C77 ▩ -	24	3.0	PVC	Ceramic	Fluorofilm™	PTFE		Pipe 1/2" NPT M	
	25HV	3.0	Polypropylene	316 S.S.	Fluorofilm™	PTFE		PE .5" O.D.	Vinyl .938" O.D.
	25P	3.0	Polypropylene	Ceramic	Fluorofilm™	PTFE		Pipe 1/2" NPT M	
	25T	3.0	Polypropylene	Ceramic	Fluorofilm™	PTFE		PE .5" O.D.	
	26S**	3.0	PVC	Ceramic	Fluorofilm™	Viton®	4FV	PE .5" O.D.	
	27	3.0	316 S.S.	316 S.S.	Fluorofilm™	PTFE		Pipe 1/2" NPT M	
	29	3.0	UHMW PE	Ceramic	Fluorofilm™	Hypalon®		PE .5" O.D.	

▩ See front page for voltage code specifications.
**These Liquid Ends are available without a 4FV, simply drop the 'S' at the end of the Liquid End number to order the model without a 4FV.
#These liquid ends use 3/8" diameter balls. Pump output may be reduced in some applications.

†To specify ¼" NPT male, change 'I' to 'P'. To specify black, UV resistant tubing, change 'I' to 'U'. To specify Bleed 4FV, change 'S' to 'B'. To specify 3FV, change 'S' to'T'.
Fluorofilm™ is a copolymer of PTFE and PFA.
Polyprel® is an elastomeric PTFE copolymer.

4FV Indicates that the pump is equipped with an LMI Four Function Valve. This diaphragm type anti-syphon/pressure relief valve is installed on the pump head. It provides anti-syphon protection and aids in priming, even under pressure.

Output Information

Series	Gallons per Hour Min	Gallons per Hour Max	Liters per Hour Min	Liters per Hour Max	mL/cc per Minute Min	mL/cc per Minute Max	mL/cc per Stroke Min	mL/cc per Stroke Max	Maximum Injection Pressure
C10, C70*, C90*	0.001	1.3	0.005	4.9	0.08	82	0.08	0.82	300 psi (20.7 Bar)
C11, C71*, C91*	0.003	2.5	0.010	9.5	0.16	158	0.16	1.58	150 psi (10.3 Bar)
C12, C72*, C92*	0.004	4.0	0.015	15.1	0.25	252	0.25	2.52	100 psi (6.9 Bar)
C13, C73*, C93*	0.008	8.0	0.030	30.0	0.51	505	0.51	5.05	60 psi (4.1 Bar)
C14, C74*, C94*	0.020	20.0	0.076	76.0	1.26	1262	1.26	12.62	25 psi (1.7 Bar)
C76*	0.004	4.0	0.015	15.1	0.25	252	0.25	2.52	175 psi (12.1 Bar)
C77*	0.010	10.0	0.038	38.0	0.63	631	0.63	6.31	80 psi (5.5 Bar)
C78*	0.025	25.0	0.095	95.0	1.58	1577	1.58	15.77	30 psi (2.07 Bar)

* Minimum output is based on 1 stroke per minute and 10% stroke setting, minimum output can be reduced further in external mode. Series C9 pumps may be programmed for strokes per hour for lower outputs.

Specification Sheet

Series C

GENERAL

Chemical metering pumps shall be positive displacement, Liquifram™ type pumps that are UL and CUL approved. Output volume shall be adjustable while pumps are in operation from zero to maximum capacity of:

C10, C70; C90	- 1.3 GPH	(4.9 liters per hour)
C11, C71, C91	- 2.5 GPH	(9.5 liters per hour)
C12, C72, C92	- 4.0 GPH	(15.1 liters per hour)
C13, C73, C93	- 8.0 GPH	(30.0 liters per hour)
C14, C74, C94	- 20.0 GPH	(75.7 liters per hour)
C76*	- 4.0 GPH	(15.1 liters per hour)
C77*	- 10.0 GPH	(38.0 liters per hour)
C78*	- 25.0 GPH	(95.0 liters per hour)

Chemical metering pumps shall be capable, without a hydraulically backed diaphragm, of injecting solutions against pressures up to:

C10, C70, C90	- 300 psig	(20.7 bar)
C11, C71, C91	- 150 psig	(10.3 bar)
C12, C72, C92	- 100 psig	(6.9 bar)
C13, C73, C93	- 60 psig	(4.1 bar)
C14, C74, C94	- 25 psig	(1.7 bar)
C76*	- 175 psig	(12.1 bar)
C77*	- 80 psig	(5.5 bar)
C78*	- 30 psig	(2.1 bar)

TYPE C1

Adjustment shall be by means of readily accessible dial knobs, one for changing stroke length and the other for changing stroke frequency (speed). Both knobs are to be located opposite the liquid handling end.

TYPE C7

Control of Series C7 metering pumps shall be selectable between internal and external pulsing by means of a 3-position center-off switch. Stroke length shall be adjustable by means of readily accessible dial knob. When in external pulsed mode, Series C7 units shall accept signals without the use of electrical timer or internal timer. Pressure capacity shall be adjustable to reduce noise, vibration and wear.

TYPE C9

Series C9 metering pumps shall have a clear liquid crystal display. Control shall be selectable between internal and external pulsing by means of a tactile keypad. Internal stroke frequency shall be adjustable from 1 stroke per hour to 100 strokes per minute. Pressure capacity shall be keypad adjustable to reduce noise, vibration and wear. Metering pump shall be capable of dividing or multiplying pulse inputs from 1 to 999 or responding directly or inversely to a 4-20mA input signal.

DRIVE

The pump drive shall be totally enclosed with no exposed moving parts. Solid state electronic pulser shall be encapsulated and supplied with quick connect terminals at least 3/16" (4.75 mm) wide. Electronics shall be housed in chemical resistant enclosure at the rear of the pump for maximum protection against chemical spillage. Electrical power consumption shall not exceed 87 watts under full speed and maximum pressure conditions. Pump weight shall not exceed 28 lbs (12.7 kg).

AUTOMATIC PRESSURE RELIEF

To eliminate need for pressure relief valve, Liquifram™ shall automatically stop pulsating when discharge pressure exceeds pump pressure rating by not more than 35%.

MATERIAL

Chemical metering pump housing shall be of chemically resistant glass fiber reinforced thermoplastic with a glass fiber reinforced polypropylene EPU carrier[1]. All exposed fasteners shall be stainless steel. Chemical metering pump valves shall be ball type, with ceramic balls[2]. Valve seat and seal ring shall be renewable by replacing the combination seat-seal ring[3] or cartridge valve assembly. Pump head shall be of transparent acrylic[4] material capable of resisting the pumped chemical. Fittings and connections at pump head shall be PVC[5].

CHECK VALVES AND TUBING

A total of 16 ft (4.8 m) of polyethylene tubing[6] shall be provided per pump complete with compression connections. A foot valve with integral one piece strainer shall be provided for the suction line, and an injection check/back pressure valve with ½" NPT male connection for the injection point. The injection check valve shall incorporate a dilating orifice which prohibits scale formation and accumulation of crystalline deposits.

(* - Not UL or CUL Approved)

Notes:

1. With plastic coated cast iron EPU carrier for Series C 76, C77 and C78.
2. Type 316 stainless steel or PTFE may be specified.
3. Hypalon®, PTFE, Viton® or Polyprel® may be specified.
4. PVC, Polypropylene, PDVF or Type 316 stainless steel may be specified.
5. PVDF, Polypropylene, or Type 316 stainless steel may be specified.
6. 6 ft. (1.8 m) of vinyl suction tubing may be specified in place of polyethylene for the suction side only. 1/4" or 1/2" male pipe thread may be specified.

LMI MILTON ROY

201 Ivyland Road
Ivyland, PA 18974 USA
TOLL FREE: (800) 564-1097
TEL: (215) 293-0401
FAX: (215) 293-0445
http://www.lmipumps.com

Replaces same of Rev.E 8/05
1619. F 11/06

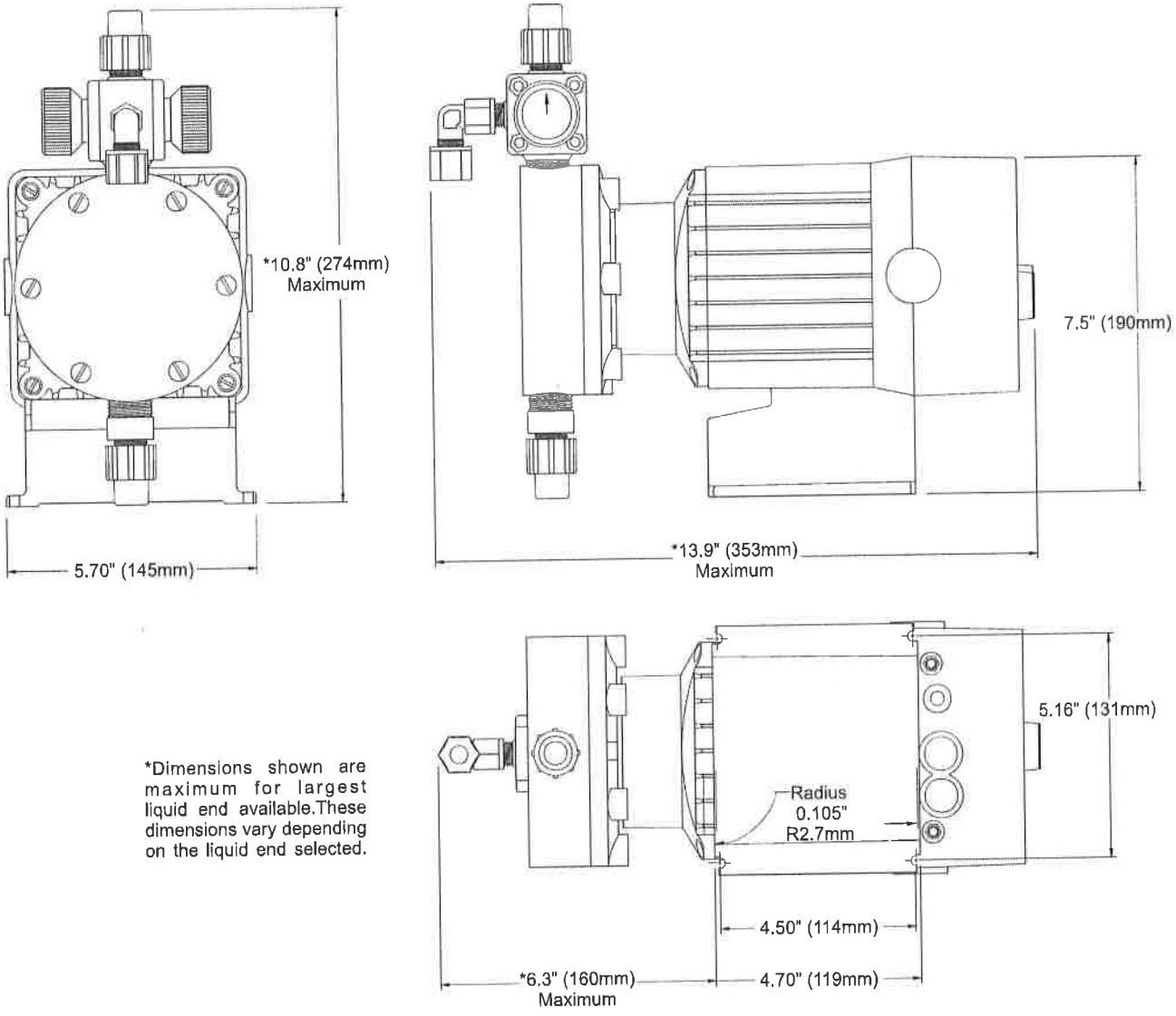

*Dimensions shown are maximum for largest liquid end available.These dimensions vary depending on the liquid end selected.

© 2005 LMI Milton Roy - All Rights Reserved
Printed in USA
Specifications subject to change without notice.

Polyprel is a registered trademark of Liquid Metronics Incorporated
Liquifram is a trademark of Liquid Metronics Incorporated
Hypalon and Viton are registered trademarks of E. I. du Pont de Nemours & Co., Inc.

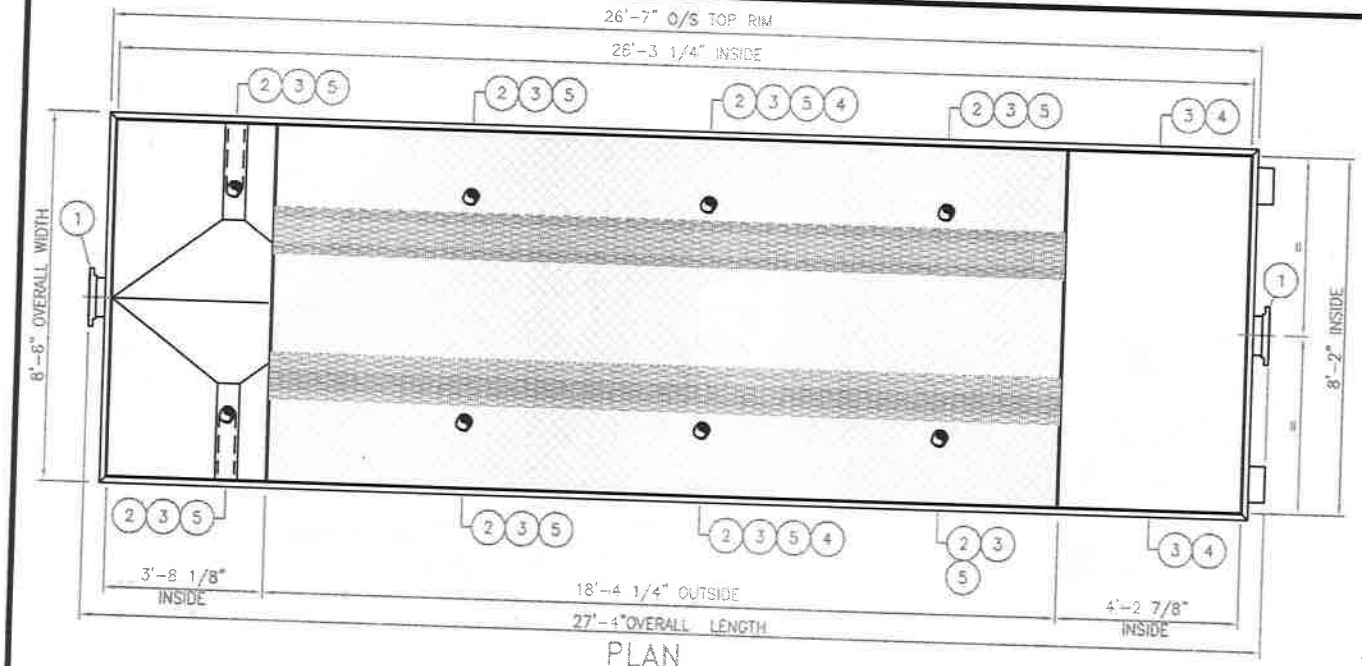

PLAN

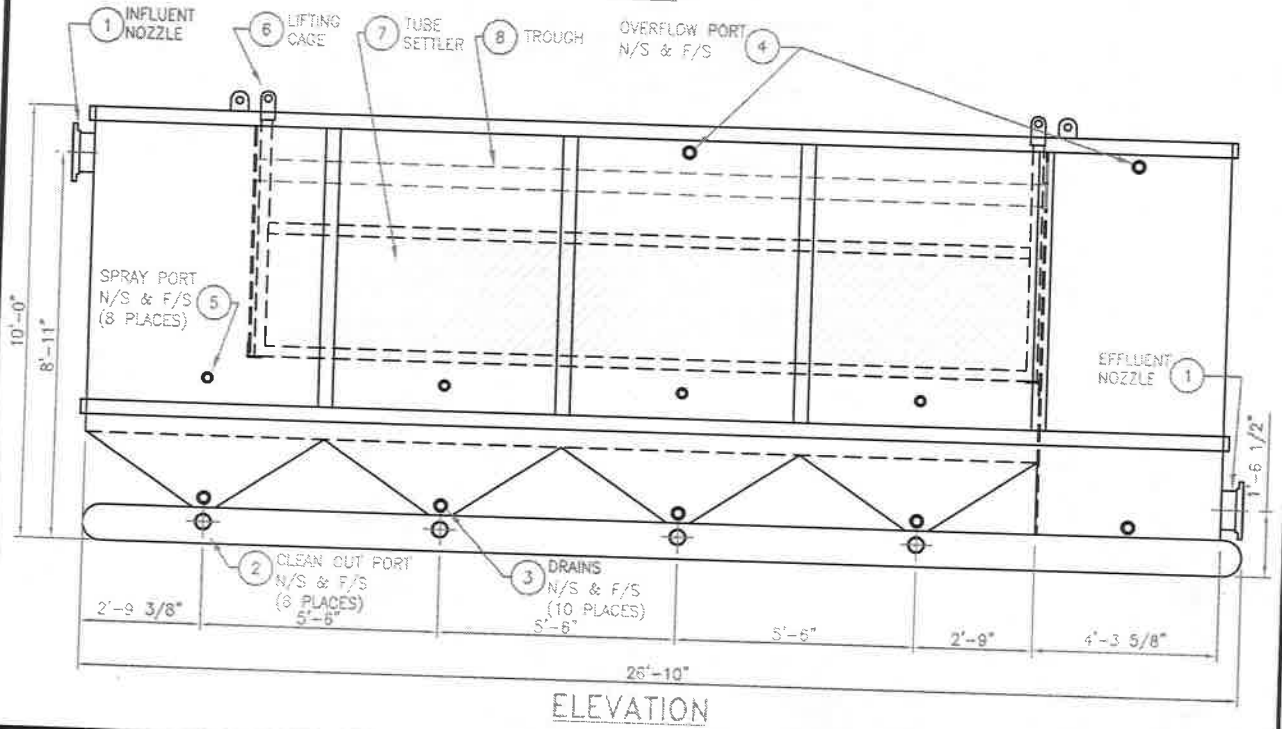

ELEVATION

#	QTY.	DESCRIPTION
1	2	INFLUENT/EFFLUENT NOZZLE W/ 10" 150LB FLG.
2	8	CLEAN OUT PORT W/ 4" NPT PIPE
3	8	DRAIN PORT, W/ 2" CUPL'G FNPT
4	4	OVERFLOW PORT, W/ 2" CUPL'G FNPT
5	8	SPRAY PORT, W/ 1" CUPL'G FNPT
6	1	PACKING REMOVAL CAGE
7	1	41 INCH DEEP TUBE SETTLER
8	2	OVERFLOWN TROUGH

GENERAL NOTES:

DESIGN DATA

- ATMATSPHERIC PRESSURE VESSEL
- TEMP. RATED @ 150 DEG. F.

- DESIGN FLOW RATE: 400 GPM
- MAXIMUM FLOW RATE: 400 GPM

MATERIAL OF CONSTRUCTION

- CARBON STEEL GRADE A36 UNLESS NOTED OTHERWISE.

SURFACE FINISH

- INTERIOR SANDBLASTED TO SSPC-SP-5 WHITE METAL FINISH AND COTED WITH POLYAMIDE EPOXY COATING BY "BENJAMIN MOORE & CO (INDUSTRIAL GRAY).

- EXTERIOR ARE PREPARED PRIOR TO PAINTING PER SSPC-SP1 (WIRE BRUSH WITH SOLVENT WIPE) AS A MINIMIUM. IF RUST OR MILL SCALE IS PREVALENT, STRUCTURE WILL BE FINISHED WITH SSPC-SPC3 POWER TOOL CLEANING AND SOLVENT WIPE) PREPARATION AND COATED WITH PRIMER AND HIGH GRAD INDUSTRIAL COATING BY BENJAMIN MOORE & CO. (INDUSTRIAL BLUE) OR EQUAL.

LOADING

- VESSEL EMPTY: (to come) LBS.
- VESSEL FLOODED DURING OPERATION: (to come) LBS

NO.	REVISIONS	DATE
A	FOR INFORMATION ONLY	04/25/06

400 GPM CLARIFIER GENERAL SPECIFICATION

SCALE:	NONE	APPROVED:	DRAWN BY: TLo
DATE:	04/25/06		

GROUND/WATER TREATMENT & TECHNOLOGY
P.O. BOX 1174
DENVILLE, NJ 07834

FILE: 14-1000/C400-01 DRAWING NUMBER: SP-01

ACCU-PAC® TUBE SETTLERS

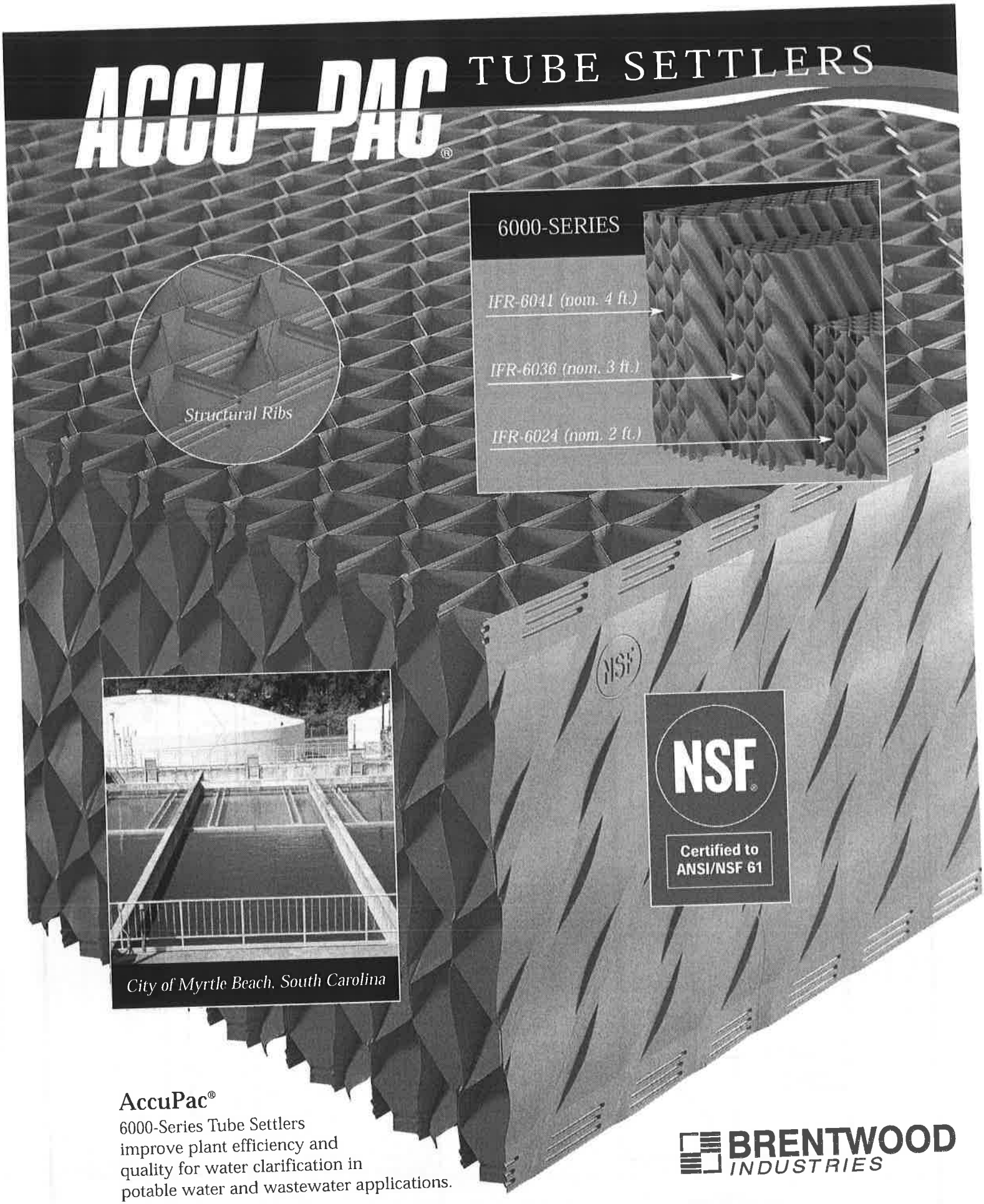

City of Myrtle Beach, South Carolina

AccuPac®
6000-Series Tube Settlers improve plant efficiency and quality for water clarification in potable water and wastewater applications.

BRENTWOOD INDUSTRIES

ACCU-PAC® TUBE SETTLERS

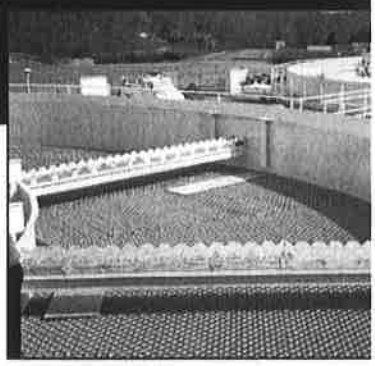

New Jersey-American Water Co.
Tinton Falls, New Jersey

AccuPac® 6000-Series Tube Settlers utilize individual, isolated tubular channels, each sloped at 60°, to expand the settling capacity of water and wastewater clariflers. Engineered with the individual tubes rising in the same direction to eliminate mixing currents and unstable flow patterns. Constructed of flame-resistant, self-extinguishing PVC that is also inert to naturally occurring constituents in water and wastewater. Potable (blue) 6000-series modules are Tested and Certified by NSF to ANSI/NSF Standard 61.

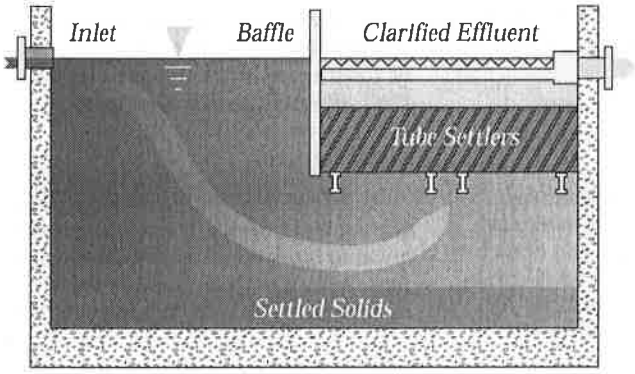

IMPROVE EFFICIENCY

The shape and configuration of 6000-series modules are engineered to minimize the Reynolds Number and to create laminar flow for rapid settling of solids. This enhanced settling reduces chemical coagulant use and downstream filter backwash requirements. For plant design and upgrading, less settling area is needed.

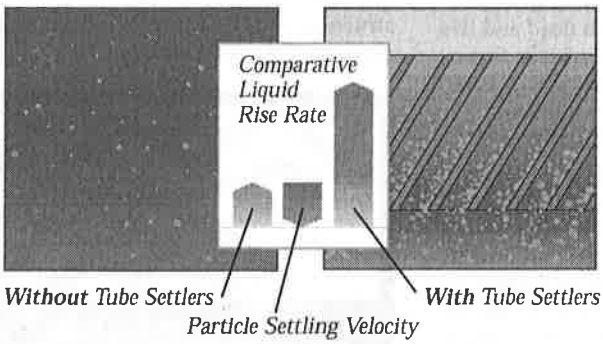

CONFIGURATIONS

For use in either circular or rectangular tanks, standard module sizes are 6, 8, 10, or 12 ft. lengths and 1 or 2 ft. widths. Other sizes available upon request. Available in both potable (blue) and non-potable (black).

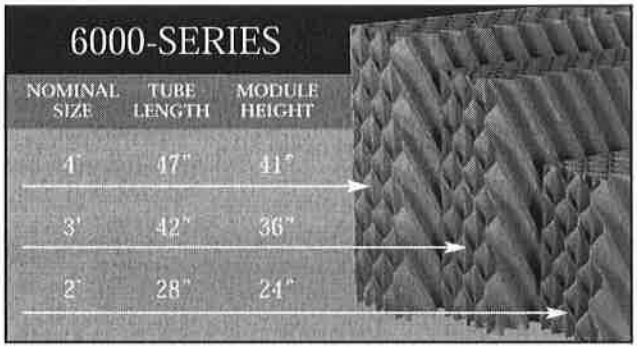

Brentwood also offers complete systems including supports, baffles, surface grating, troughs, and weirs as required for both municipal and industrial projects.

Non-metallic chain and flight sludge collection systems for rectangular clarifiers are available from our Polychem division.

NSF Certified to ANSI/NSF 61

STRUCTURAL INTEGRITY

The 6000-SeriesTube Settler modules are self-supporting and constructed of prime, rigid, UV-protected PVC. Integrated structural ribs provide substantial loading strength (maximum 250 lbs/ft²). The unique design assures a solid interface during installation. Brentwood's sheet forming and bonding processes ensure tremendous strength and long-term durability.

HIGH-TUBIDITY, HIGH RATE APPLICATIONS

3' and 4' IFR-6000 modules are particularly effective in high-turbidity, and higher rate applications

TUBE SETTLER MAXIMUM APPLICATION RATES

Flow (GPM): Required flow through the basin.

Area (FT²): Tube settler area within the basin.

Application Rate (AR): $\frac{GPM}{FT^2}$

IFR-6024 (2 ft.)	IFR-6036 (3 ft.)	IFR-6041 (4 ft.)
AR = ≤ 2.5	AR = ≤ 4.0	AR = ≤ 4.5

BRENTWOOD INDUSTRIES

Brentwood Industries, Inc.
Mailing Address P.O. Box 605, Reading, PA 19603, USA
Shipping Address 610 Morgantown Road, Reading, PA 19611
Phone 610.236.1100 *Fax* 610.736.1280
Email wwsales@brentw.com
Website www.BrentwoodProcess.com

© Brentwood Industries 2003
Printed 06/03

Tube Settler System Design

Tube Settler System design is based on these three criteria:

Flow (gpm): Required hydraulic flow capacity through the basin

Area (ft²): Plan area of tank for tube settlers.

Design Application Rate: Flow/Area (1.5 to 3.5 gpm/ft²)

Tube settlers handle maximum application rates from 2.5 to 4.5 gpm/ft². The recommended application rate for design purposes is 1.5 to 3.5 gpm/ft². This design application rate should be verified in accordance with local design standards for allowable flows, application rates, etc. Consideration of the influent water chemistry, settleability, and basin hydraulics should also play a role in selecting the proper application rate.

TUBE SETTLER	VERTICAL HEIGHT	TUBE LENGTH**	TYPICAL DESIGN APPLICATION RATE	EQUIVALENT SETTLING AREA
20"	20.00"	23.09"	1.50 gpm/ft²	10.3 ft²/ft
IFR-6024*	24.00"	27.71"	2.00 gpm/ft²***	12.3 ft²/ft
30"	30.00"	34.64"	2.50 gpm/ft²	15.4 ft²/ft
IFR-6036*	36.00"	41.57"	3.00 gpm/ft²	18.5 ft²/ft
40"	40.00"	46.19"	3.50 gpm/ft²	20.5 ft²/ft
IFR-6041*	41.00"	47.34"	3.50 gpm/ft²	21.0 ft²/ft

* Brentwood Tube Settlers
** Tube length is based on an angle of 60°
*** Some states are limited by the 10 States Standards application rate of 2.0 gpm/ft²

The top of the tube settler modules should be submerged approximately 18" to 30" below the water surface. To prevent high velocities and short circuiting of tubes, the velocities through the sedimentation basin should be verified. This can be calculated by dividing the flow through the tank (ft³/s) by the cross sectional area (height x width) perpendicular to flow under the tube settler area, where the height is the distance between the bottom of the tube settlers and the basin floor.

Basin Velocity = Flow (ft³/s) /Area (ft²) ≤ 0.05 fps

The velocities under the tube settler area generally should not be greater than 0.05 fps. To avoid problems with longitudinal velocity, either the tank width or height should be modified. If this is not feasible, consideration of decreasing the flow is an option. Note that this figure is a general guideline and, if the velocity is a concern, a more detailed hydraulic analysis should be performed. When designing the layout of tube settlers within a basin, care should be given to avoid installation near entrance areas where turbulence could impact the performance of the tubes. In a horizontal basin it is recommended that approximately one-third of the basin length should remain tube-free to act as a quiescent zone. Generally, this is easy to implement because the required area of tube settler coverage will occupy a smaller portion of the basin.

Support System Design

Tube settler module support systems should have a bearing surface of approximately 2". Bearing surfaces of more than 2" will cause blockage of the tubes that are in contact with the structural members. Supports less than 2" wide can create loading forces that could crush the modules and reduce their effectiveness. Tubular supporting structures are not recommended because they create point loads, which can severely damage the tube settlers.

The support system can be made of stainless steel, painted carbon steel, or aluminum.

Supports for the modules must be located a minimum of 1'-0" from the end of each module for modules less than 8'-0" in length and 1'-6" for modules greater than 8'-0" in length.

The support system must be designed with consideration of both live loads (human traffic) and dead loads (Dead loads include the weight of the PVC tube settlers, floc build-up, troughs, baffles, protective surface grating, etc.). The dry weight of PVC tube settlers is approximately 1.75 to 2.00 lbs/ft³. The support system should be designed in accordance with a maximum 8'-0" unsupported span of the tube settler. This design will support both dead and live loads with an adequate safety factor. Some manufacturers will design based on a 10'-0" unsupported span that limits operator access and can be potentially dangerous.

In rectangular tanks, the supports should span the full width of the tank. If this is not possible, intermediate support columns may be used. However, the support system should not impact any sludge-collecting device operations or other basin operations. Often concrete center columns are available for use in attachment of the tube settler support system.

Circular clarifiers can use supports that span from the outside diameter to the center well, creating pie shape tube settler areas. If complete coverage is not required for circular clarifiers, cantilevered support frames can be attached to the outer wall to provide the required coverage area.

Trough Design

Troughs and weirs for the tube settler system must be designed to handle peak flows and meet local regulatory requirements. Generally, a flow of 20,000 gpd per linear foot of weir (10 States Standards) is sufficient. Material of construction for troughs and weirs is commonly UV-inhibited, NSF-certified fiberglass or stainless steel. The layout of the troughs should be equally-spaced so flow distribution is realized throughout the tube settler area. A general rule of thumb is that trough spacing should not be more than four times the tube submergence.

Baffle Design

Baffles located at the tube settler/quiescent zone interface are required to direct water through the tube settlers area. They should be constructed of UV-inhibited fiberglass, PVC, or stainless steel. The design of the baffle system should be integrated with the support system.

Tube Settler Access

During basin design, consideration must be given to operator access for cleaning and for servicing of the effluent troughs/weirs, as required, within the tube settler area. Like any type of equipment, tube settlers will require periodic cleaning and maintenance and it is unreasonable to deny access for plant operators. A basin walkway design and/or a protective covering on the tube settlers should be provided to allow for a safe walking surface. A plastic or fiberglass grating is ideal because it not only allows access to the tubes, troughs, and weirs, but also adds a protective layer to the tube settlers. Any type of grating must be specifically designed not to hinder the tube settler performance and to be structurally sufficient without causing damage to the tube settlers.

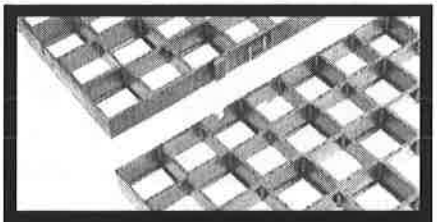

Brentwood AccuGrid® Protective Surface Grating

Brentwood has developed a unique, cost-effective means of providing additional protection to a tube settler system. Our potable-grade NSF-certified AccuGrid provides a protective layer from foot traffic and from the repeated hydraulic impact which occurs during routine wash-downs. The one-piece, interlocking panels are strong, lightweight, economical, and easy to install. AccuGrid protective surface grating will extend the useful life of the tube settlers by 2-3 times.

TUBE SETTLER DESIGN & APPLICATION

System Design Criteria

According to the technical review entitled *Tubular Settlers*[2], written by Mr. Roderick M. Willis in 1978, there are three basic requirements essential for successful performance of tube settlers.

1. There must be laminar (or viscous) flow conditions within the tubes at the maximum flow rate required. Laminar flow is essential so that each slowly-settling floc particle within a tube maintains a steady descent to the collecting surface of the tube and is not intermittently swept upward by turbulent currents within the tube.

2. The residence time within each tube must be ample so that a floc particle entering at the extreme upper edge of the tube will have sufficient time to settle to the collecting surface a vertical distance below. (Once the particle reaches the collecting surface, the coalescing tendency between particles creates a steady sludge formation).

3. The velocity of flow through the tubes must not exceed a critical maximum that would cause the settled sludge to lose stability and be swept out of the tube in the direction of normal flow. As a corollary, the volume of the tube must be ample to allow either accumulation or a continual discharge backward of all sludge, without critically changing the normal flow rate through the tube

Size, Shape, and Configuration

In addition to system design criteria, size, shape, and configuration need to be evaluated when choosing a tube settler module design. The vertical settling height within a tube should be kept as short as possible, within the restraints of cost and plugging potential, to minimize the settling distance for the particles. A V-groove base should be provided to allow for the rapid accumulation of solids into a compact mass, which slides continuously down the tube.

When selecting a tube settler, careful consideration should also be given to the vertical height of the modules. There are several different size tube settlers, each having a specific application rate. *(See chart under System Design for more info.)* Tube settlers with a vertical height of 24" and a tube length of 28" are the most commonly used size. 3' and 4' tube heights, because of longer residence time, are advantageous in many applications as well, such as high flow/high turbidity applications and where existing basins need improved settling capabilities to increase the plants total capacity.

Tube settlers manufactured with the tubes aligned in the same direction avoid the formation of crossing points that crossflow tubes promote. Many manufacturers compromise tube settler flow-through with "criss-crossing" tubes in order to achieve module rigidity. Crossing points can re-suspend the floc particles, affecting process performance. Tube modules that have flow in only one direction are easier to clean and have less chance for plugging, particularly where ends of modules meet.

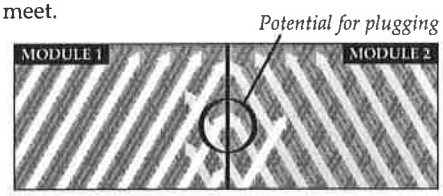

CRISS-CROSSING TUBES

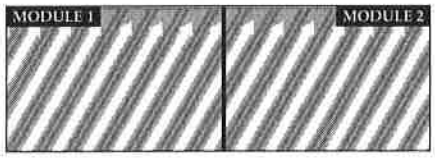

UNI-DIRECTIONAL TUBES

Also, the tube module design should incorporate features that would prevent gaps along the installed modules. These gaps allow short-circuiting of unclarified water to pass around the tube settlers. A module design which allows nesting with adjacent modules is ideal because it maximizes available area and increases the total module strength.

Tube Settlers vs. Plate Settlers

Plate settlers (Lamella Plates) are often compared to tube settlers when evaluating options for upgrading plants. They are more expensive than tube settlers because of the material of construction, and the wide plates in operation tend to be hydraulically unstable. Tube settlers eliminate crossflows and eddy currents and allow for the use of corrosion-resistant, lighter-weight PVC, resulting in a 50% cost savings. Tube settlers are a common, economically-viable alternative/solution to parallel plates (plate settlers).

Material of Construction

Tube settler modules should be constructed of evenly-spaced sheets of PVC which are solvent-welded to form a durable bond between sheets and channels. The PVC material is inert and resistant to deterioration from naturally-occurring constituents in water or wastewater.

Material and finished modules to be used for potable water treatment plant should be Certified to ANSI/NSF-61 Standard for drinking water.

Any material used for either water or wastewater should include an ultraviolet radiation inhibitor.

Some tube settler modules are constructed of ABS, which is a highly flammable material. A spark from welding, drilling, or a cigarette, etc. could ignite the ABS tube settlers, causing injury to personnel and damage to the tube settlers and surrounding structures.

PVC modules (unlike ABS and other materials) have a specific gravity considerably greater than water and will not float. ABS modules have a specific gravity only slightly higher than water and require a tie-down system. This results in greater costs for material and installation. A tube settler module constructed of PVC will not require any hold-down system or clips.

The mechanical properties of PVC exceed those of ABS, resulting in a more structurally sound installation. The most important mechanical property of PVC, flexural modulus, is 30% greater then that of ABS. PVC is denser, has greater tensile strength, higher impact strength, and is much less flammable then ABS.

"The Paducah WTP increased their total plant capacity by 4.0 MGD (12.0 MGD to 16.0 MGD) by replacing their existing 20" high tube settlers with new, extended tube settlers having a vertical height of 36". This allowed the plant to meet the increased demand without building a new settling basin, saving the City of Paducah hundreds of thousands of dollars."

Comparison of Physical and Mechanical Properties of PVC and ABS

PROPERTY	TEST METHOD	PVC	ABS
Specific Gravity	D792	1.45 gram/cm³ max.	1.06 gram/cm³ max.
Tensile Strength	D638/D882	6,000 psi min.	5,100 psi min.
Flexural Modulus	D790	425,000 psi min.	300,000 psi min.
Flexural Strength	D790	11,000 psi min.	8,500 psi min.
Impact Strength	D256	10.0 ft-lbs/in min.	6.3 ft-lbs/in min.
Heat Deflection	D648	158°F @ 264 psi min.	180°F @ 264 psi min.
Flammability	UL94	Grade Count = 22 (self-extinguishing)	Grade Count = 135 (extremely flammable)

[2] Willis, R.M. *Tubular Settlers-A Technical Review, Journal AWWA*, 331:335 (June 1978)

Tube Settlers

Tube settlers and parallel plates increase the settling capacity of circular clarifiers and/or rectangular sedimentation basins by reducing the vertical distance a floc particle must settle before agglomerating to form larger particles.

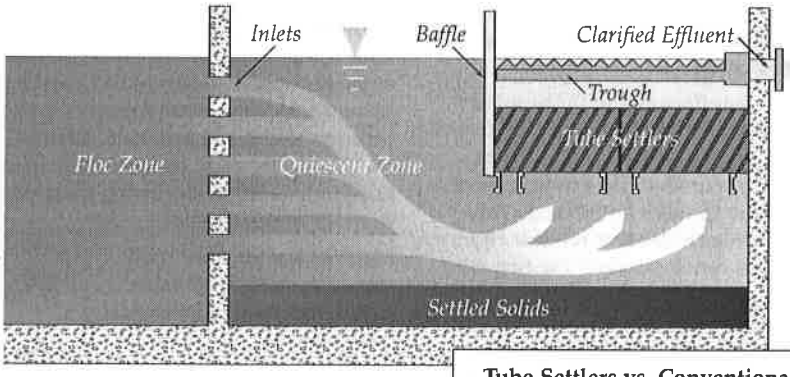

Tube Settlers vs. Conventional Settling

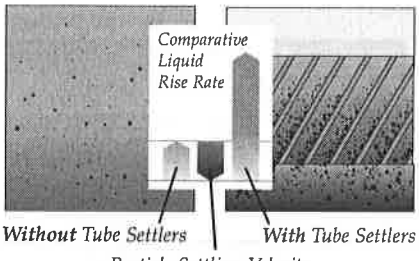

Tube settlers use multiple tubular channels sloped at an angle of 60° and adjacent to each other, which combine to form an increased effective settling area. This provides for a particle settling depth that is significantly less than the settling depth of a conventional clarifier, reducing settling times.

Tube settlers capture the settleable fine floc that escapes the clarification zone beneath the tube settlers and allows the larger floc to travel to the tank bottom in a more settleable form. The tube settler's channel collects solids into a compact mass which promotes the solids to slide down the tube channel.

Why Tube Settlers?

Tube settlers offer an inexpensive method of upgrading existing water treatment plant clarifiers and sedimentation basins to improve performance. They can also reduce the tankage/footprint required in new installations or improve the performance of existing settling basins by reducing the solids loading on downstream filters.

Made of lightweight PVC, tube settlers can be easily supported with minimal structures that often incorporate the effluent trough supports. They are available in a variety of module sizes and tube lengths to fit any tank geometry, with custom design and engineering offered by the manufacturer.

Advantages of Tube Settlers

The advantages of tube settlers can be applied to new or existing clarifiers/basins of any size:

- Clarifiers/basins equipped with tube settlers can operate at 2 to 4 times the normal rate of clarifiers/basins without tube settlers.
- It is possible to cut coagulant dosage by up to half while maintaining a lower influent turbidity to the treatment plant filters.
- Less filter backwashing equates to significant operating cost savings for both water and electricity.
- New installations using tube settlers can be designed smaller because of increased flow capability.

"Clarifiers equipped with tube settlers can operate at 2 to 4 times the normal rate of clarifiers without tube settlers."

- Flow of existing water treatment plants can be increased through the addition of tube settlers.
- Tube settlers increase allowable flow capacity by expanding settling capacity and increasing the solids removal rate in settling tanks.

"The City of Westminster, CO used alum as their water treatment plant flocculant. After the installation of tube settlers, they cut the alum dosage from 30 ppm to 16 ppm, and the filter influent turbidity was still decreased by 25%. Since the filter influent turbidity had decreased, this enabled a savings of over 27% water used for filter backwashing[1]."

[1] *Innovative Plant Operations Yield Bonuses, Opflow,* Vol. 6 No. 10 (Oct. 1980)

BRENTWOOD INDUSTRIES

Document 1.2 © October 2005

Water Technology Group

WHY BRENTWOOD TUBE SETTLERS?

Brentwood provides complete engineered systems, including tube settlers, supports, baffles, troughs & weirs, and protective surface grating. The advantages of a Brentwood installation are:

- **Single source responsibility.** Avoid problems with coordination of engineering, installation, and pricing of different components.
- **Save money** by purchasing an economical packaged system.
- **Exclusive products and features** like AccuGrid Protective Surface Grating and integrated structural ribs provide unique benefits to the tube settler system.
- **Extensive engineering experience** in both plastics design and water treatment technologies are utilized in every system design.

Project Customization

Brentwood tube settler modules can be "custom fit" for either rectangular or circular tanks. Standard lengths available are 6', 8', 10', or 12', with standard widths of 1' or 2'. Other sizes are available upon request.

Every tube settler system is different due to project requirements, tank configuration, etc. Please contact us to provide detailed budget pricing, schematic system layouts, and specifications for your particular system design.

Project Pricing

The following case studies are representative of Brentwood's economic performance within the water industry. The figures shown, adjusted for inflation, are from actual projects. System budget prices will vary considerably based on structural requirements and the scope of the project.

CASE STUDY #1:

IFR-6024 System vs. Plate Settler System	
8 basins, 20'x52' tube settler area, Project allowed cost add for plate settler system.	
Plate Settler System	Bid Cost = $1,000,000
IFR-6024 System	**Bid Cost = $400,000**

CASE STUDY #2:

Retrofit w/Tubes vs. Build New Basin	
2 basins, 17'x32' tube setter area.	
New Tank Cost*	Budget Cost = $300,000
IFR-6036 System	**Budget Cost = $95,100**

CASE STUDY #3:

New Tank w/o Tubes vs. w/Tubes	
1 basin 20'x50' without Tubes, 1 basin 15'x30' with Tubes	
Without Tubes*	Budget Cost = $375,000
IFR-6041 System	**Budget Cost = $250,000**

Does not include new inlet piping, flocculation chamber, troughs, weirs, outlet piping. Includes only site grading, excavation, concrete tank

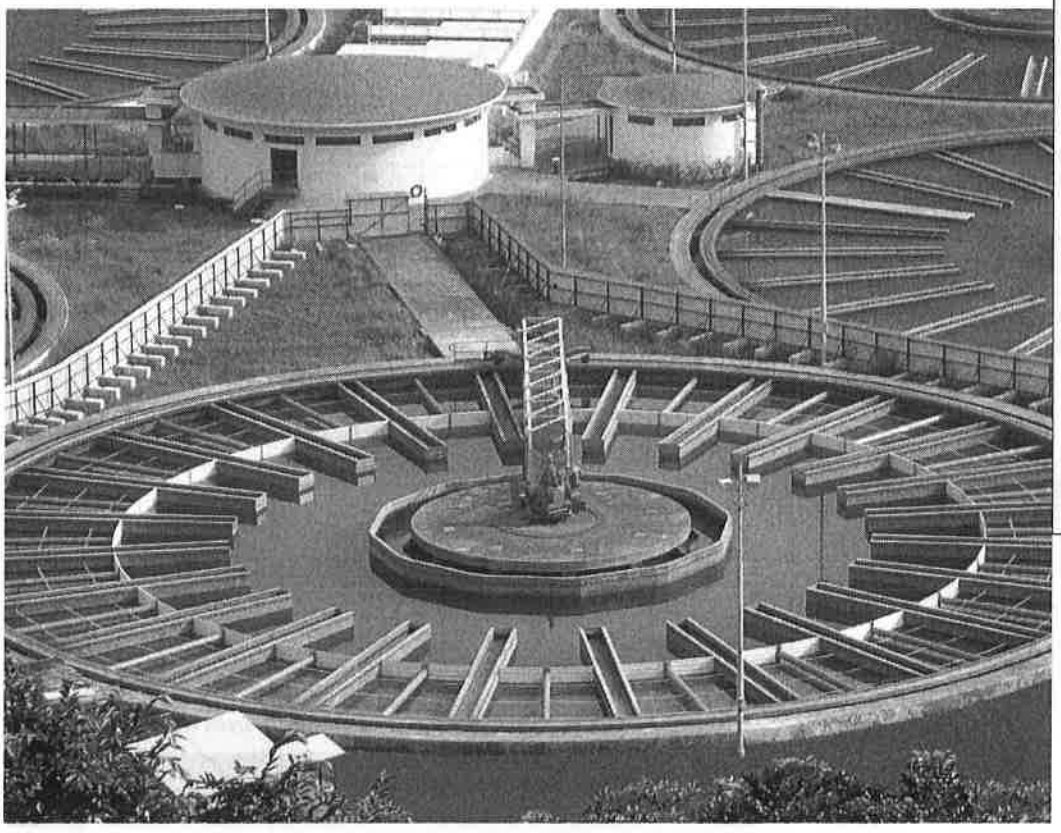

The City of Myrtle Beach Surface Water Treatment Facility has 5 settling tanks, each with an original design flow capacity of 5 MGD. Each tank is 60' wide x 120' long x 15.5' deep, divided into three 20' passes.

The sedimentation process was a major component that needed to be upgraded or expanded to increase the plant's rated capacity to meet current and future flow predictions. Enhanced settling was required because the 4-hour detention time was not being met at 30 MGD. After reviewing all available options, the City of Myrtle Beach SWTF decided to purchase and install Brentwood IFR-6024 Tube Settlers in each of the 5 settling basins.

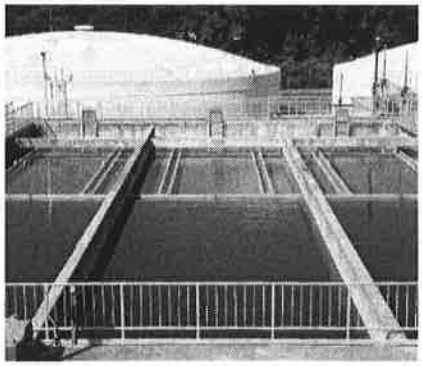

"After less than a year in operation, our Brentwood Tube Settler System:

- *Increased our flow capability (approved plant capacity) from 30 to 40 MGD*
- *Contributed significantly to historically-low settled water turbidity*
- *Reduced chemical coagulant usage*
- *Improved overall filter performance*
- *Allowed us to reduce the state Dept. of Health and Environmental Control (DHEC) mandated basin retention times from 4 hours to approximately 2.5 hours*
- *Allowed greater operating flexibility for the plant staff"*

Sam Scialdone
Plant Superintendent

BRENTWOOD INDUSTRIES
610 Morgantown Road, Reading, PA 19611
Phone 610.236.1100
Fax 610.736.1280
Email wwsales@brentw.com
Website BrentwoodProcess.com

AMT
A Subsidiary of The Gorman-Rupp Company
TM

NEW FOR 2007
90° ROTATABLE BASE ON ALL MODELS

Self-Priming Diaphragm Pumps

- ***Sand Cast Aluminum** Construction for Portability and Durability*
- ***Thermoplastic Rubber Diaphragm***
- ***2" to 3" NPT Suction and Discharge Sizes***
- ***1-5/8" Diameter Solids Handling Capability***
- ***Modular Component Design Permits Easy Maintenance and Cleanout***
- ***Engine Driven Models: Choice of Honda and Briggs & Stratton Gas or Yanmar Diesel Engines***
- ***Delivers up to 90 GPM***
- ***Maximum Temperature 180°F***

The AMT line of 2" and 3" Diaphragm pumps features 2-stage, 44 to 1 gear reduction with a large diameter output gear and heavy duty ball bearing construction. Often referred to as Mud Pumps or Sludge Pumps, diaphragm pumps are designed to pump mud, slurry, sewage, and thick liquids that have the ability to flow. AMT Diaphragm pumps are available with a choice of drivers to meet your application requirements: Briggs & Stratton or Honda gasoline engines, Yanmar Diesel, and 115 VAC electric motor with weatherproof cord and switch. Built-in molded polyurethane flapper/check valve assures self-priming to 20 ft. after initial prime. Heavy duty gear box is designed to operate pumps at 40 strokes per minute for Electric Motor Models and 60 strokes per minute for Engine-Driven Models. Each unit includes a 2" or 3" NPT steel suction strainer, two NPT nipples, and a wheel kit with 10" semi-pneumatic transport wheels for portability. Models 336E-K6, 336G-K6, 335G-K6, and 335E-K6, are kits provided less motor or engine. Pumps are designed for use with non-flammable liquids which are compatible with pump component materials. ***Suction and discharge port size cannot be reduced.***

Model 335D-96*

*shown with 90° rotatable base

INDUSTRIAL DUTY

Model 335H-96*
*handle not shown

Model 335E-96

Performance of 2" Diaphragm Pumps

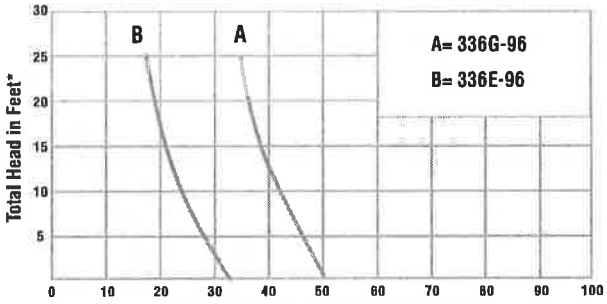

* Convert to PSI, divide by 2.31 Liquid-Water specific gravity 1.0

Performance of 3" Diaphragm Pumps

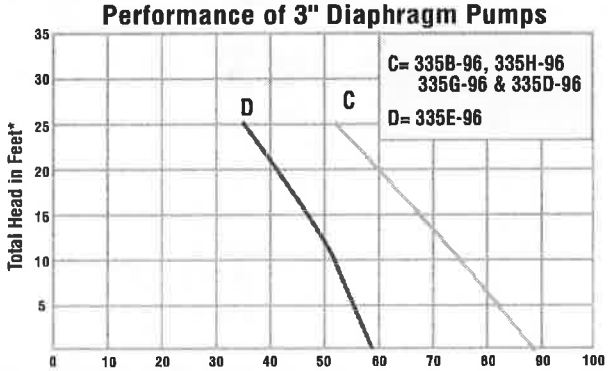

* Convert to PSI, divide by 2.31 Liquid-Water specific gravity 1.0

Diaphragm Pumps

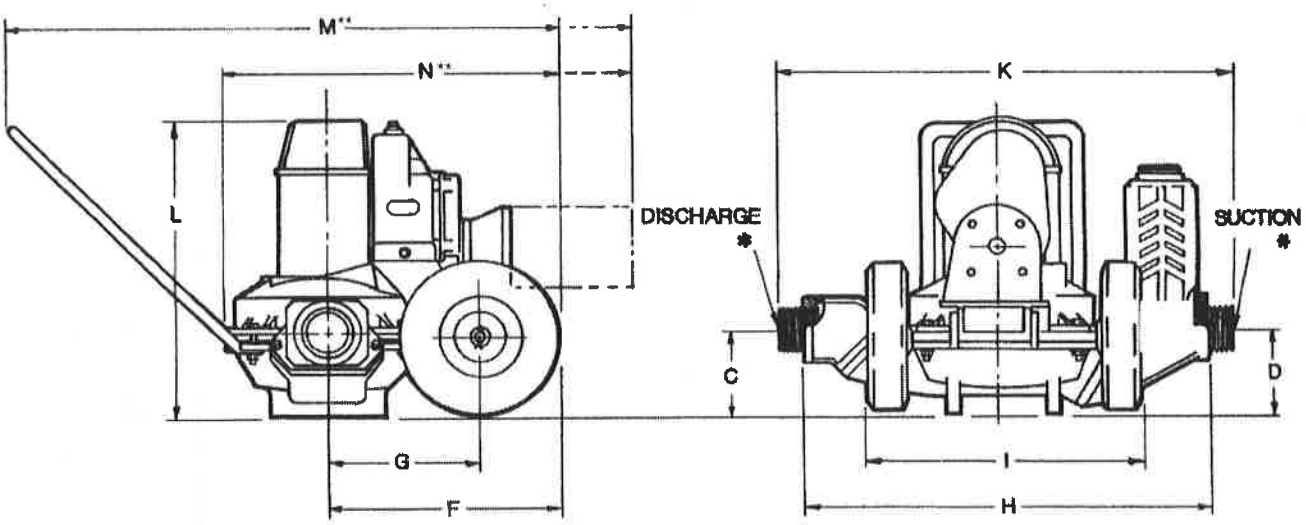

Model #	Curve	Driver	SUC*	DIS*	C	D	F	G	H	I	K	L	M**	N**	Shpg. Wt.
336G-96	A	HONDA GX120	2"	2"	7.3	5.6	17.8	12.8	22.2	18.1	25.7	23.2	39.2	25.0	125 lbs.
336E-96	B	1.5 HP Elec. Motor	2"	2"	7.3	5.6	17.8	12.8	22.2	18.1	25.7	23.2	41.1	26.8	131 lbs.
335G-96	C	HONDA GX120	3"	3"	6.2	6.3	14.5	9.5	26.5	17.9	30.0	22.0	42.0	46.0	175 lbs.
335E-96	D	1.5 HP Elec. Motor	3"	3"	6.2	6.3	14.5	9.5	26.5	17.9	30.0	22.0	43.5	27.5	186 lbs.
335B-96	C	B&S CP550	3"	3"	6.2	6.3	14.5	9.5	26.5	17.9	30.0	22.0	41.5	25.5	181 lbs.
335H-96	C	HONDA GX160	3"	3"	6.2	6.3	14.5	9.5	26.5	17.9	30.0	22.0	41.5	25.5	182 lbs.
335D-96	C	YANMAR DIESEL L48	3"	3"	6.2	6.3	14.5	9.5	26.5	17.9	30.0	22.0	43.0	27.0	203 lbs.
336G-K6	A	Kit, Less Engine	2"	2"	7.3	5.6	17.8	12.8	22.2	18.1	25.7	23.2	N/A	N/A	95 lbs.
336E-K6	B	Kit, Less Motor	2"	2"	7.3	5.6	17.8	12.8	22.2	18.1	25.7	23.2	N/A	N/A	95 lbs.
335G-K6	C	Kit, Less Engine	3"	3"	6.2	6.3	14.5	9.5	26.5	17.9	30.0	22.0	N/A	N/A	146 lbs.
335E-K6	D	Kit, Less Motor	3"	3"	6.2	6.3	14.5	9.5	26.5	17.9	30.0	22.0	N/A	N/A	146 lbs.

(*) Standard NPT (female) pipe thread.
(**) This dimension may vary due to motor or engine manufacturer's specifications.
NOTE: Dimensions have a tolerance of ±1/8".

Standard Features for AMT Diaphram Pumps

- Engine Driven Models - Choice of Honda, Briggs & Stratton Gas or Yanmar Diesel Engines
- 2" to 3" NPT Port Sizes
- Models 336E-96/335E-96 – 1.5 HP single phase, 115/230 Volt motor with manual reset overload includes 20 foot 115 VAC power cord and weather-proof on/off switch
- Models 336G-K6/335G-K6 – Kit, furnished less engine. For use with gasoline or diesel engines with .75" keyed shaft (SAE J609a Mounting Flange)
- Model 336E-K6/335E-K6 – Kit, furnished less motor. For use with electric motor (1725 RPM) or air motor with a minimum of 1.5 HP. 56C Mounting Flange required.

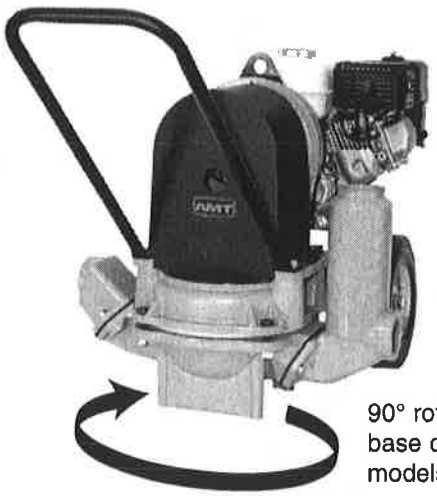

90° rotatable base on all models

OFF THE SHELF PUMPS

WARNING: Do not use in explosive atmosphere or for pumping volatile flammable liquids.

See price book page 13

The Gorman-Rupp Company reserves the right to discontinue any model or change specifications at any time without incurring any obligation.

PROPRIETARY DATA

PROPERTY OF DEN HARTOG INDUSTRIES, INC. INFORMATION FURNISHED HEREIN IS THE PROPERTY OF DEN HARTOG INDUSTRIES, INC. AND SHALL NOT BE USED, DISCLOSED TO OTHERS, OR COPIED WITHOUT THE EXPRESSED WRITTEN CONSENT OF DEN HARTOG INDUSTRIES, INC. ALL RIGHTS RESERVED.

CB2600-86 C

1. SPECIFIC GRAVITY IS 1.75
2. 1 PIECE ROTATIONALLY MOLDED
3. TRANSLUCENT
4. FDA APPROVED RESIN
5. CALIBRATED IN GALLONS
6. THREE YEAR WARRANTY
7. UV STABILIZED
8. MIXER OR PUMP MOUNT ON REQUEST

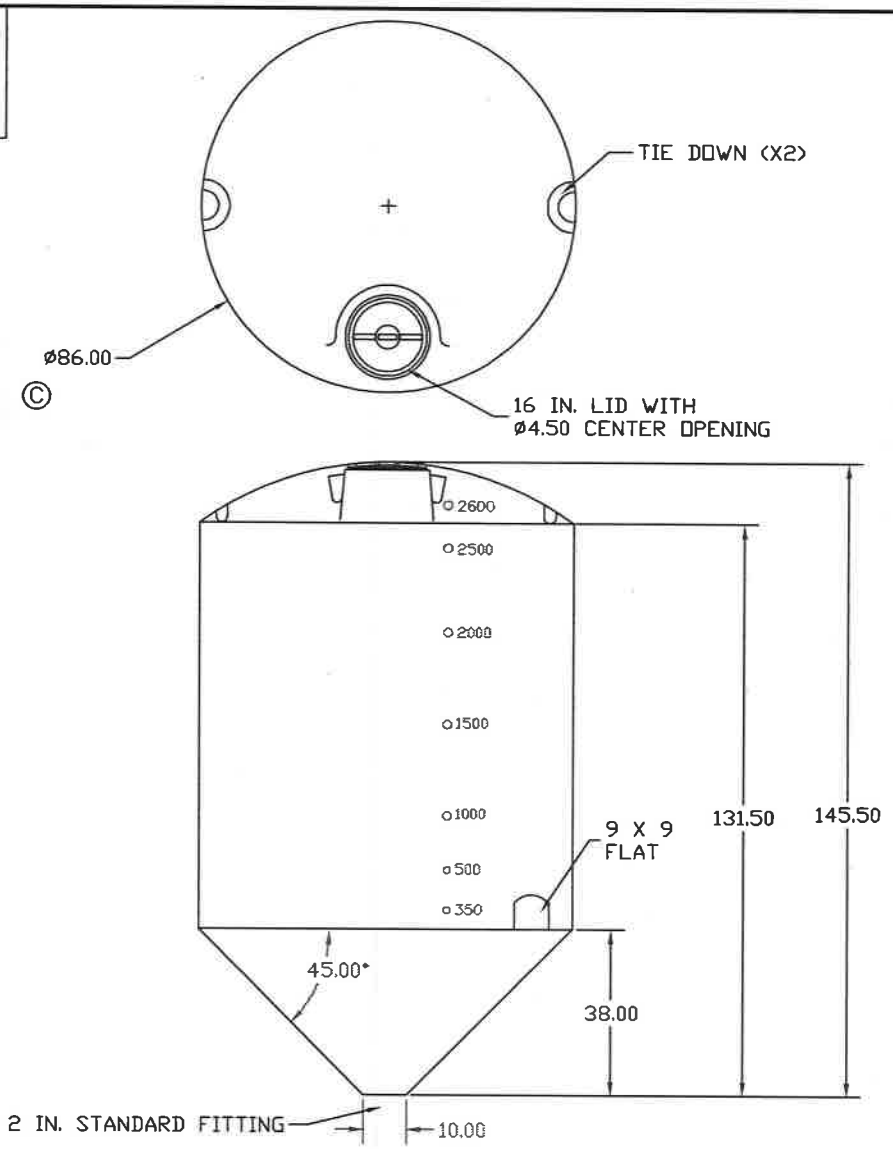

REV	DESCRIPTION	DATE	APPRD
C	DIAMETER WAS 85	7/31/06	NVE
B	UPDATED DIMENSIONS	7/13/06	NVE
A	ISOLATED TANK AND STAND	6/13/06	NVE

DRAWN / DATE
DHJ 12/9/93

APPRD. / DATE

ALL DIMENSIONS ARE IN DECIMAL INCHES
TOLERANCES UNLESS OTHERWISE SPECIFIED
± 1% @ 68° F

THIRD ANGLE PROJECTION
ANSI 14.5M

MATERIAL

HDPE OR EQUIVALENT
REFERENCE MATERIAL DATA SHEET FOR SPECIFIC PROPERTIES.

NOTES:

1. NOM. WALL @ 0.369
2. SHOT WEIGHT 500 LBS.

ACE ROTO-MOLD
A DIVISION OF DEN HARTOG INDUSTRIES, INC.
4018 HWY. 60 BLVD, BOX 421, HOSPERS, IOWA 51238

CLIENT / DESCRIPTION
2600 Gallon ø86 CONE BOTTOM TANK

SCALE
N.S.

PART NO.
CB2600-86

PROPRIETARY DATA

PROPERTY OF DEN HARTOG INDUSTRIES, INC. INFORMATION FURNISHED HEREIN IS THE PROPERTY OF DEN HARTOG INDUSTRIES, INC. AND SHALL NOT BE USED, DISCLOSED TO OTHERS, OR COPIED WITHOUT THE EXPRESSED WRITTEN CONSENT OF DEN HARTOG INDUSTRIES, INC. ALL RIGHTS RESERVED.

CB086-45ST

C

KEY	PART NUMBER	DESCRIPTION	QTY.
1	A01250X15000	1/8 X 1 1/2 ANGLE	200 IN
2	B02500X30000	1/4 X 3 FLAT	306 IN (6 @ 51)
3	B03750X20000	3/8 X 2 FLAT	288 IN (6 @ 48)
4	C03X4.1	3" CHANNEL	576 IN
5	P10000	1" PIPE	217.5 IN (6 @ 36.25)
6	S-14GA	14 GA SHEET	9999 SI, (3 @ 48 X 88)
7	SJCB86/90ST-1	12" CB RING STAND	1
8	SJCB86/90ST-7	1/4 X 4 X 4 LEG PAD	6
9	T1000X01090	1 OD X .109 TUBING	241.5 IN (6 @ 40.25)

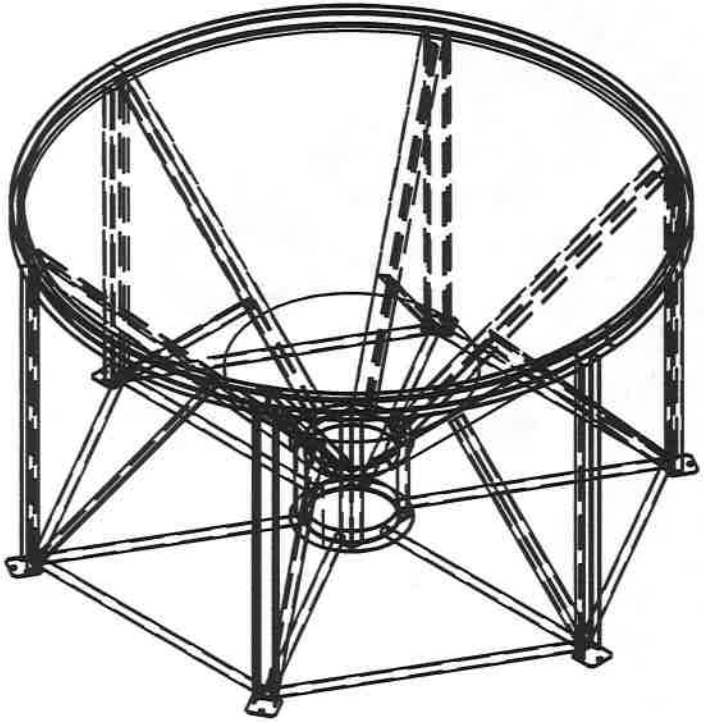

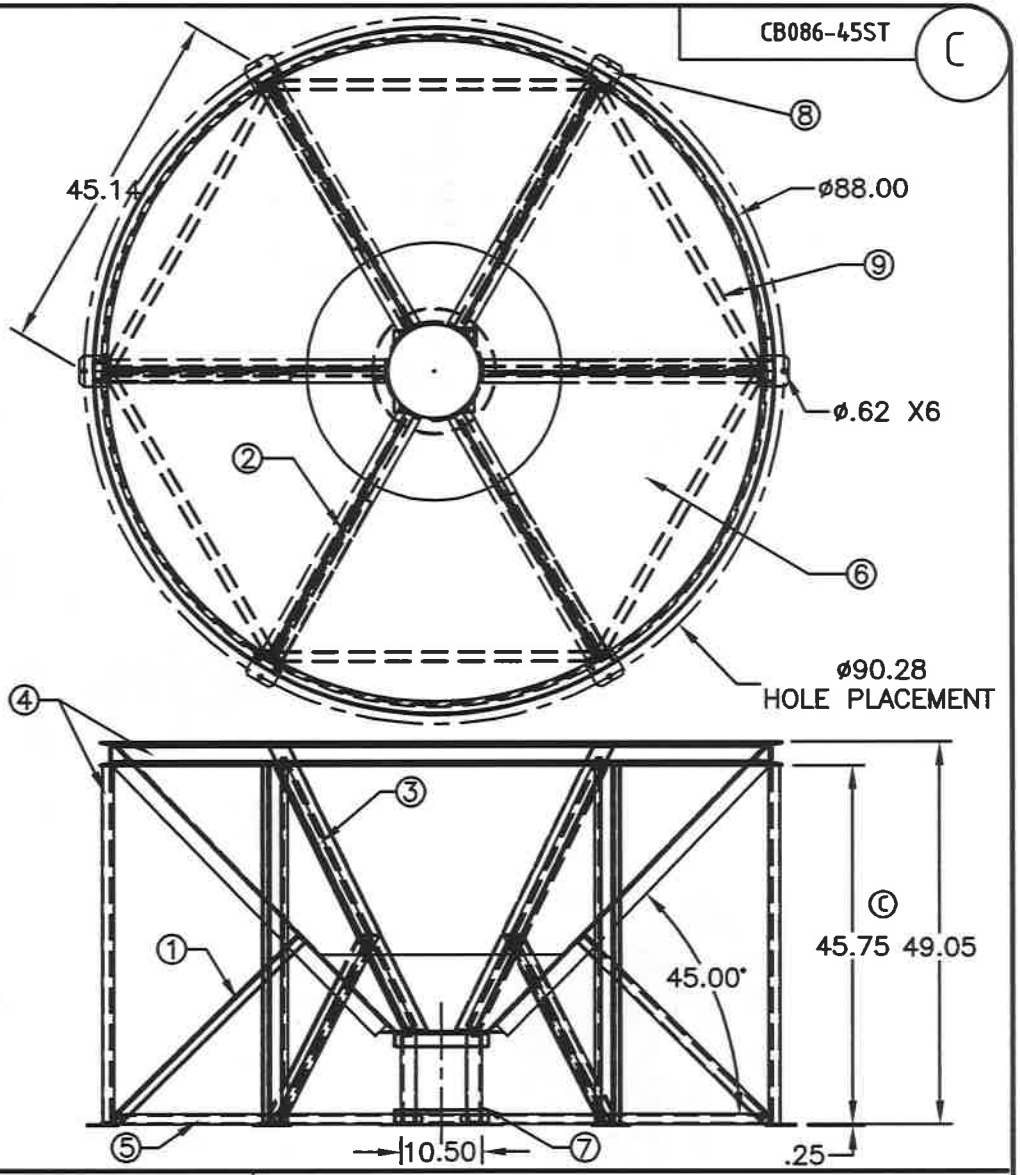

REV	DESCRIPTION	DATE	APPRD
C	WAS 46.00	12/27/06	
B	PN WAS CB08S-45ST	7/31/06	NVE
A	ADDED B.O.M.	6/9/06	NVE

DRAWN / DATE: NVE 7/1/05

APPRD. / DATE: DHJ 10/14/05

MATERIAL: MILD STEEL

ACE ROTO-MOLD
A DIVISION OF DEN HARTOG INDUSTRIES, INC.
4010 HWY. 60 BLVD., BOX 425, HOSPERS, IOWA 51238

CLIENT / DESCRIPTION: STAND FOR ø86.00 45° CONE BOTTOM TANKS

ALL DIMENSIONS ARE IN DECIMAL INCHES
TOLERANCES UNLESS OTHERWISE SPECIFIED
± 0.25

THIRD ANGLE PROJECTION
ANSI 14.5M

NOTES:
1. POWDER COATED - BLACK COLOR
2. WEIGHT 580 LBS.

SCALE: N.S.

PART NO.: CB086-45ST

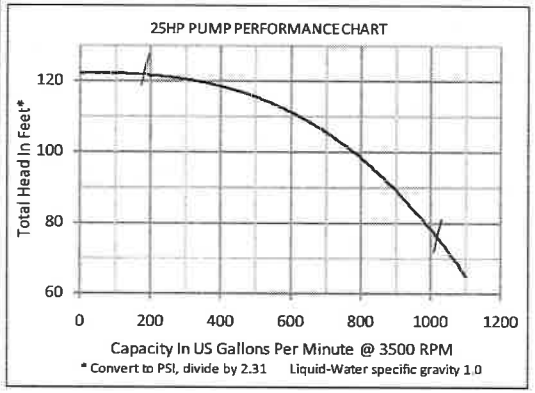

HIGH LEVEL ALARM

ELECTRICAL PANEL SPECIFICATIONS FOR 25 HP DUPLEX PUMP SKID

- VOLTAGE: 460 VOLTS
- PHASE: 3
- REQUIRED OVER CURRENT PROTECTION: 80 AMPS
- ACTUAL CURRENT LOAD: 71.1 AMPS

SERVICE WITHIN 50' (PROVIDED BY OTHERS)

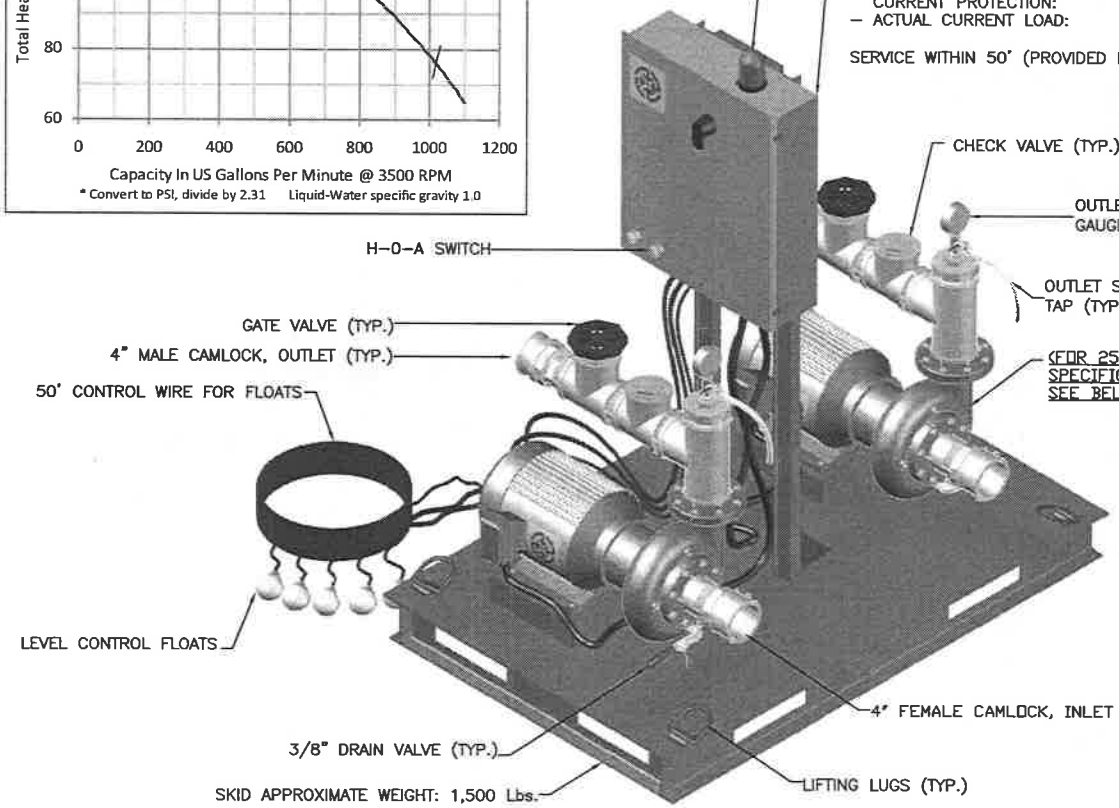

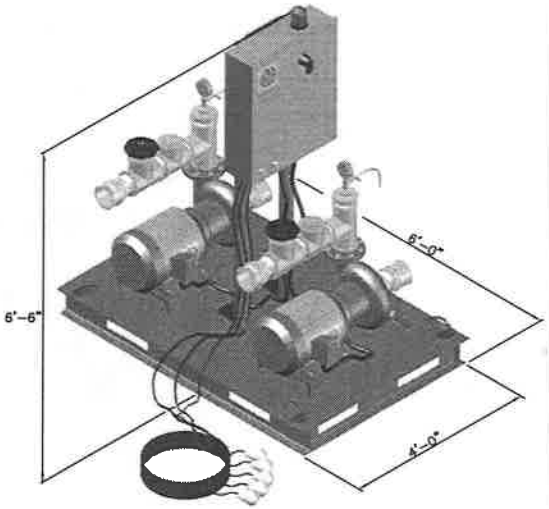

NOTE: THIS DRAWING DEPICTS A "TYPICAL" SKID.
ACTUAL DETAILS AND DIMENSIONS MAY VARY.

25 HP PUMP MECHANICAL/ELECTRICAL SPECIFICATIONS

- TYPICAL CAPACITY AND HEAD: 750 GPM @ 100' TDH
- CONSTRUCTION: STAINLESS STEEL
- MAXIMUM HEAD: 120 ft.
- MAXIMUM FLOW: 1000 GPM
- FRAME: 256TCZ
- ENCLOSURE: TEFC
- SUCTION: 4" FLANGE
- DISCHARGE: 4" FLANGE
- PUMP WEIGHT: 400 Lbs.
- IMPELLER DIAMETER: 6"
- DRIVER: 60 Hz, 2 POLE, 3500 RPM

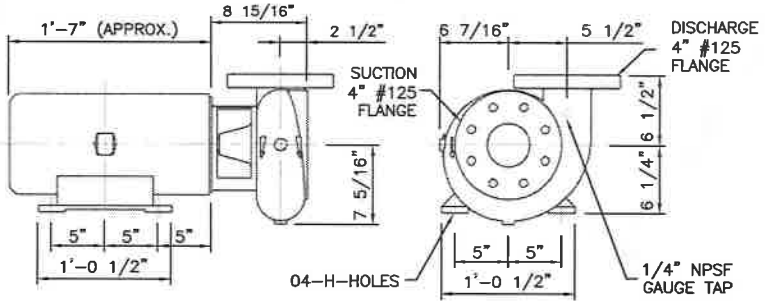

NO.	REVISIONS	DATE
A	TYPICAL	01/14/09

DUPLEX 25 Hp PUMP SKID STANDARD EQUIPMENT SPECIFICATION

SCALE:	NTS	APPROVED BY:	JB	DRAWN BY:	AAV
DATE:	01/14/09				

GROUND/WATER TREATMENT & TECHNOLOGY
P.O. BOX 1174
DENVILLE, NJ 07834

THIS DRAWING IS THE PROPERTY OF GROUND/WATER TREATMENT & TECHNOLOGY, INC

DWG SIZE:	A	SHEET:	1 OF 1	DRAWING NUMBER:	ST-0048-SPC	A

I:\Cad Files Rentals - STANDARD DRAWINGS\EQUIPMENT SPECIFICATION PUMPS\ST-0048-SPC Rev-A Duplex 25 Hp Pump Skid.dwg

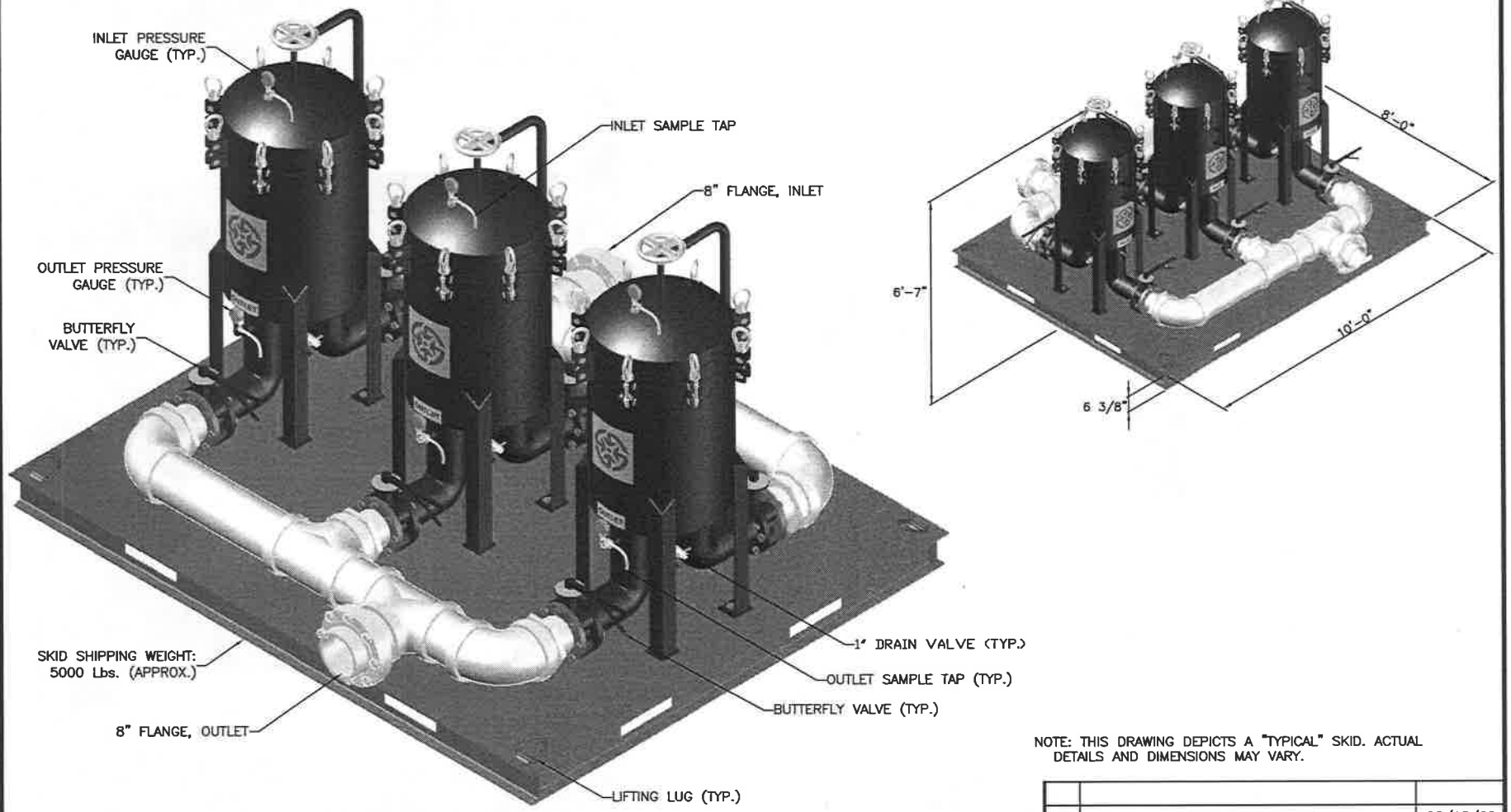

NOTE: THIS DRAWING DEPICTS A "TYPICAL" SKID. ACTUAL DETAILS AND DIMENSIONS MAY VARY.

PRESSURE DROP

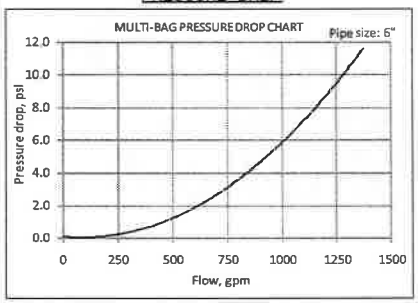

MULTI-BAG FILTER SPECIFICATIONS

- CONSTRUCTION:	CARBON STEEL
- HOUSING STYLE:	STANDARD
- NUMBER OF BASKETS:	6
- STRAINING FILTERING AREA:	26.4 SQR. FT.
- INLET/OUTLET SIZE:	6"
- NOMINAL FLOW RATE:	600
- STANDARD PRESSURE:	150 PSI
- WEIGHT (PER DRY UNIT):	750 Lbs.

BASIC DIMENSIONS

MODEL NUMBER & A: 24"
LEG BOLT CIRCLE: ø22.0"

B: 6"	C:15.0"
D: 50.7"	E: 69.7"
F: 7.00"	G: 20.1"

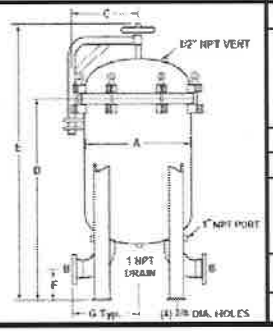

NO.	REVISIONS	DATE
C	ADDED SKID WEIGHT	02/18/09

TRIPLEX SIX BAG FILTER SKID STANDARD EQUIPMENT SPECIFICATION

SCALE: NTS	APPROVED BY: JB		DRAWN BY: AAV
DATE: 07/17/08			

GROUND/WATER TREATMENT & TECHNOLOGY
P.O. BOX 1174
DENVILLE, NJ 07834

THIS DRAWING IS THE PROPERTY OF GROUND/WATER TREATMENT & TECHNOLOGY, INC

DWG SIZE: A	SHEET: 1 OF 1	DRAWING NUMBER: ST-0020-SPC	C

I:\Good Files\Rentals - STANDARD DRAWINGS\EQUIPMENT SPECIFICATION\BAG FILTERS\ST-0020-SPC Rev-C Triplex Six Bag Filter Skid.dwg

Rosedale Filter Media

Rosedale has a wide selection of filter media available to help solve your filtration problems. Our product offerings include filter bags, filter cartridges, and perforated strainer baskets. This selection features a variety of options from low-cost, disposable filter media; through high-performance filter cartridge; to cleanable stainless steel elements.

The filtration efficiency values specified in our data (see Element Performance Chart on page 123), are the indication of the filter's performance. Unlike many manufacturers, Rosedale publishes the filtration efficiency and dirt capacity of our media, providing all the information needed for an accurate sizing of a filter.

Our media is offered in standard grades and high efficiency. Standard grade refers to products which are nominally rated. This means there is no specified efficiency at the micron size but the product is interchangeable with industry standards. Rosedale high efficiency filter media is rated 95%, 99%, or 99.98% efficient at the specified micron level.

Nominal Rating	Absolute Rating (95% Efficiency)
1	35
3	35
5	48
10	55
15	65
25	70
50	90
75	110
100	110

Bag or cartridge filters are usually selected so that the clean pressure drop does not exceed 2 psi. Change-out is recommended at 15 psid (for bags), and 30 psid (for cartridges). Higher pressure drops may be tolerated when contaminant loading is low.

A more comprehensive chart on page 123 details each product group with corresponding efficiency and micron rating.

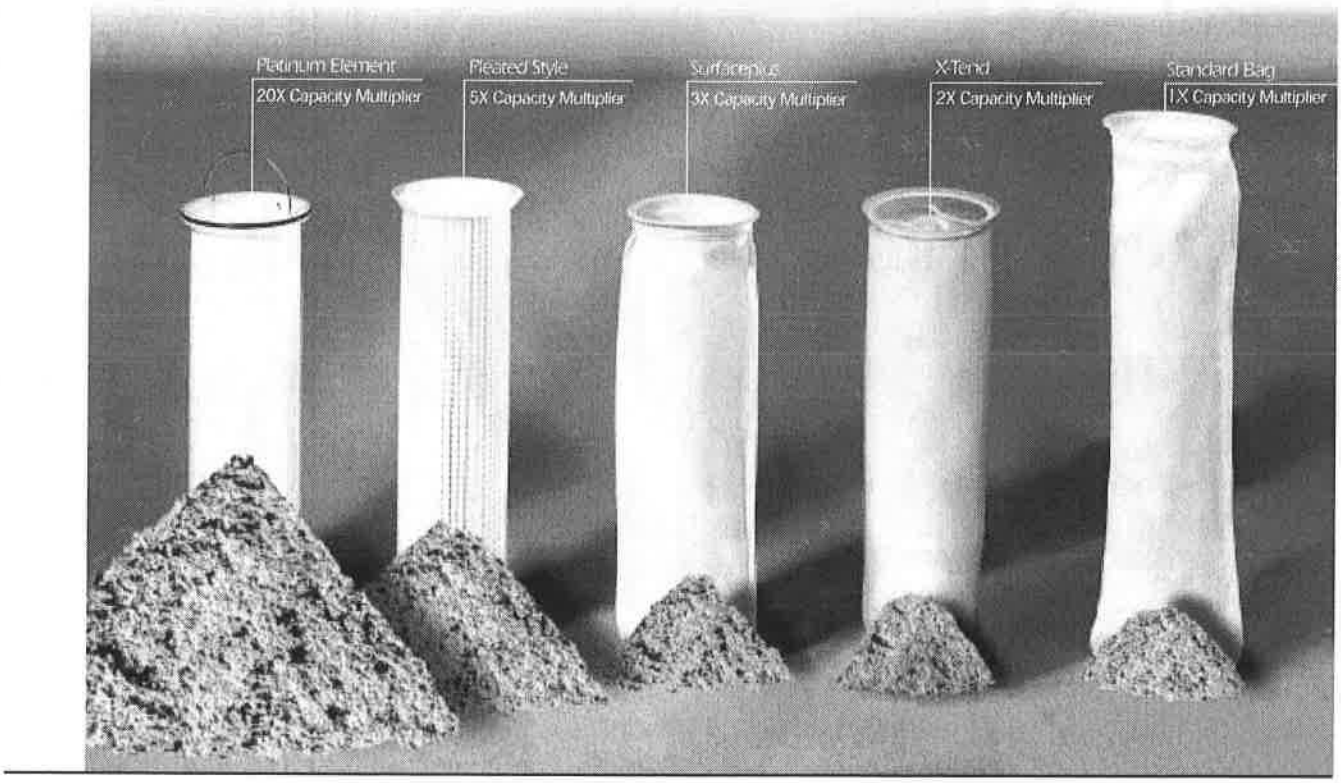

High-Capacity Filter Bags for Rosedale Bag Filters

Fits All Rosedale Filter Housings

Construction

Felt Bags-Standard Grade

Felt construction is generally chosen where smaller particle retention is required, in the nominal 1 to 100 micron range. It offers higher solids loading capacity than mesh. General-purpose felt bags are offered in polyester and polypropylene materials. Special-purpose felt bags are offered in polyester and polypropylene materials. Special-purpose felt bags include high temperature service (to 500°F) bags of Nomex® nylon or Teflon®.

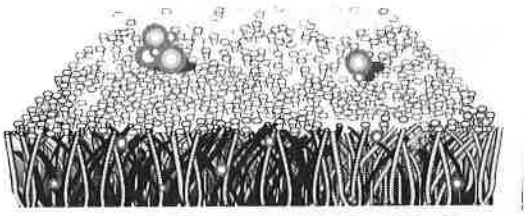

Mesh Bags

Mesh is a woven construction, generally used where micron ratings of 50 to 800 are required.

Two types are offered. The **multifilament** mesh is a low cost, disposable material offered in polyester. **Monofilament** mesh has higher strength, and is available in nylon. (It should be considered cleanable.)

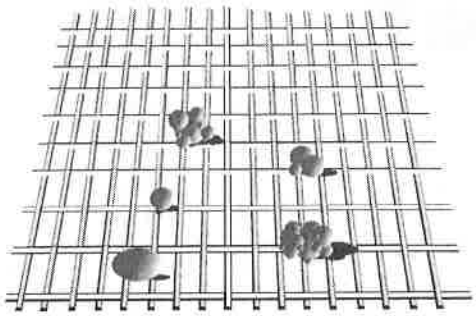

Oil Adsorption Bags

For removal of free oil, bags made of polypropylene microfibers, known as oil-adsorb, are available. A size 2 oil-adsorb bag will remove approximately a half-pound of oil from a water-oil liquid. It is only available with a 25 micron rating. If finer filtration is needed in an oil removal task, or high volume oil removal is required, Rosedale's Sorbent Containment Systems are available and information is located on page 101.

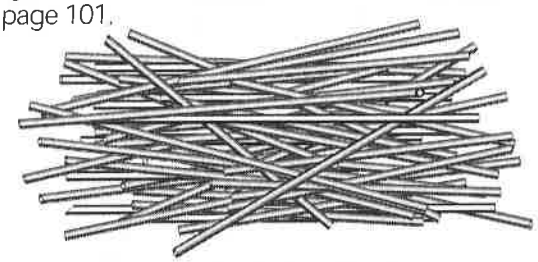

Melt Blown Media (Microfiber)

Polypropylene melt blown media offers unparalleled adsorption capacity for the removal of hydrocarbon contaminates from liquid streams. The melt blown media is also the heart of the high efficiency filter bag. The small diameter fibers create the bag's ability to remove fine particulate at high efficiencies. Fiber diameter is important because the pore size is a function of fiber diameter, density of fibers, and thickness of materials.

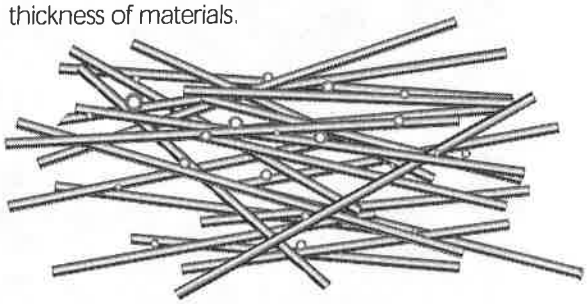

Felt Bag Finishes and Covers

Standard finish. Plain, as manufactured, without treatment or covers.

Glazed finish. The outer most surface fibers are melted by a momentary application of high heat. This bonds the fibers together and reduces the possibility of fiber migration.

Mesh covers completely encase the felt bag. This cover acts to contain any fibers that may separate from the filter bag. Materials available in mono and multifilament mesh, spun bonded nylon and polyester.

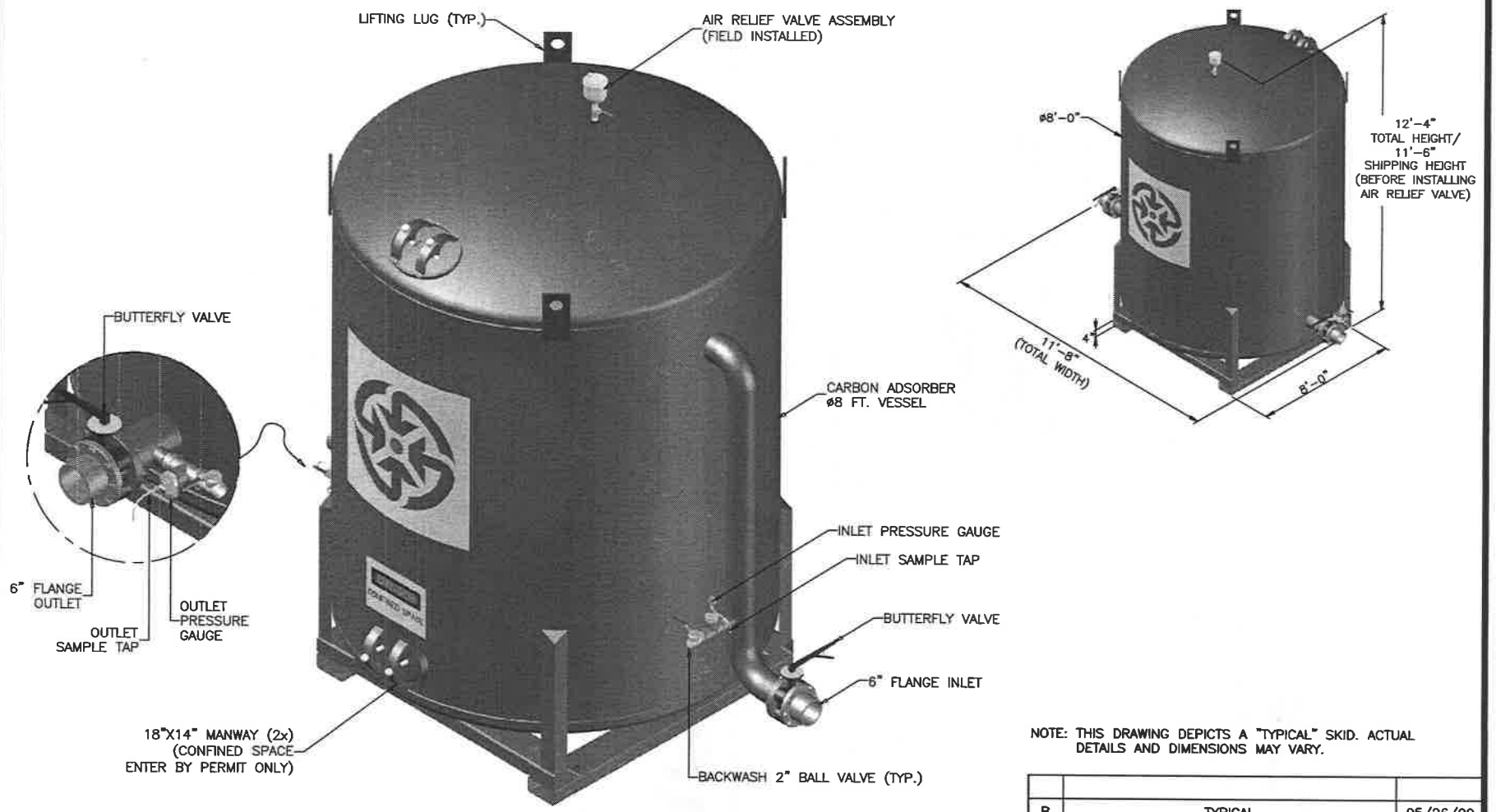

NOTE: THIS DRAWING DEPICTS A "TYPICAL" SKID. ACTUAL DETAILS AND DIMENSIONS MAY VARY.

10,000 POUNDS CARBON ADSORBER SPECIFICATIONS

– CARBON FILL:	10,000 Lbs.
– DESIGN STANDARD PRESSURE:	75 PSI
– MAX. FLOW RATE:	500/1,000 GPM
– HOUSING CONSTRUCTION:	A-36 CARBON STEEL
– INLET CONNECTION:	6" FLANGE
– OUTLET CONNECTION:	6" FLANGE
– DRAIN:	N/A
– CARBON FILL VOLUME:	350 Cu.ft.
– CARBON ADSORBER WEIGHT	
EMPTY:	5,000 Lbs.
SHIPPING (W/CARBON):	15,000 Lbs.
OPERATING:	30,000 Lbs.
– EBCT @ 500 GPM:	5.25 min.

NO.	REVISIONS	DATE
B	TYPICAL	05/26/09

10,000 Lb. CARBON ADSORBER STANDARD EQUIPMENT SPECIFICATION

SCALE: NTS	APPROVED BY: JB	DRAWN BY: AAV	
DATE: 09/30/08			

GROUND/WATER TREATMENT & TECHNOLOGY
P.O. BOX 1174
DENVILLE, NJ 07834

THIS DRAWING IS THE PROPERTY OF
GROUND/WATER TREATMENT & TECHNOLOGY, INC

DWG SIZE: A	SHEET: 1 OF 1	DRAWING NUMBER: ST-0032-SPC	B

I:\cad files\Rendok - STANDARD DRAWINGS\EQUIPMENT SPECIFICATIONS\CARBON ADSORBERS\ST-0032-SPC Rev-B 10k Carbon Adsorber Unit.dwg

Design of Pump and Treat GAC Systems

A pump and treat scheme like the one shown in the Figure below made up of two adsorbers in series allows for the best utilization of the carbon. The adsorbers should be sized to give an empty bed contact time (EBCT) of between 5 and 15 minutes at a hydraulic surface loading of 1 to 8 gpm/ft^2. These operating parameters are important in that they can strongly influence the length of the mass transfer zone (MTZ). The length of the MTZ should be significantly shorter than the depth of carbon bed. If this is not the case rapid breakthrough of the components being controlled may occur.

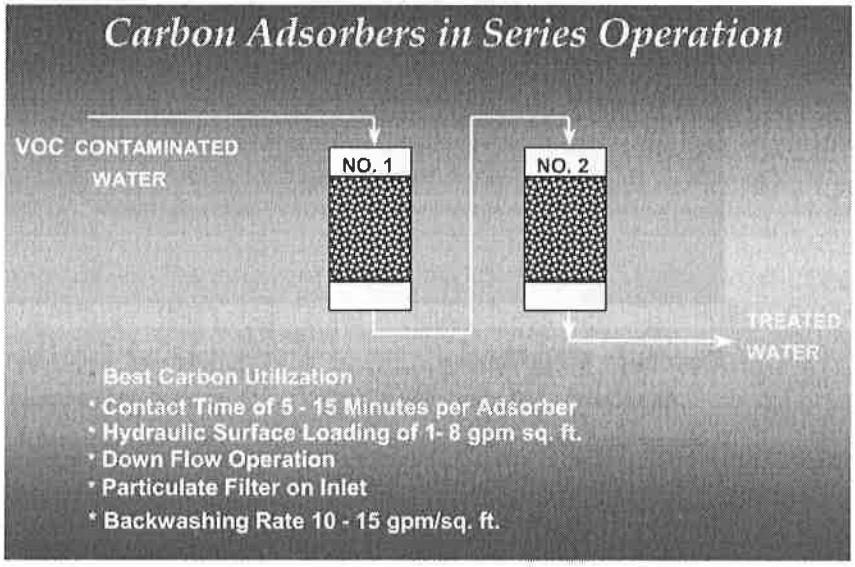

The lead adsorber in series operation is normally operated beyond the breakthrough discharge limit for the first compound needing to be controlled. This allows for more complete loading of the carbon contained in the first adsorber (reducing carbon consumption) before it is changed out with fresh carbon and the second adsorber is moved to the lead position. Under some circumstances such as low contaminant concentrations, long contact times and long expected operating cycles, adsorbers can be operated in parallel without a backup adsorber, provided the effluent from the adsorber is frequently monitored. Often the appearance of the contaminant of interest at the vessels 75% sample port is used to schedule changeout servicing. Monitoring in this manner assures breakthrough beyond acceptable limits does not occur.

The above is an excerpt from USFilter Westates Technical Dept. Los Angeles, CA, Tech Note No. 24, October 2001 "Carbon Applications for Groundwater Clean-Up" by James R. Graham, PhD., Technical Director, USFilter Westates.

DATA SHEET

USFILTER WESTATES CARBON AQUACARB® 830 AND 1240

Coal based granular activated carbon

(Formerly KG-401 and KG-502)

FOR MUNICIPAL, INDUSTRIAL AND REMEDIAL WATER TREATMENT

Description & Applications

AquaCarb® 830 and AquaCarb® 1240 are high activity granular activated carbons manufactured from selected grades of bituminous coal. Manufactured by direct activation, they exhibit exceptional hardness and attrition resistance and have become a cost effective choice for use in municipal, industrial and remedial water treatment applications. These high surface area microporous carbons have been specifically developed for the removal of a broad range of organic contaminants from potable, waste and process waters.

- ANSI/NSF Standard 61 classified for use in potable water applications
- Fully conforms to physical, performance and leachability requirements established by the current ANSI/AWWA B604 (which includes the Food Chemical Codex requirements)
- A detailed quality assurance program guarantees consistent quality from lot to lot and shipment to shipment

Quality Control

All AquaCarb® activated carbons are extensively quality checked at our State of California certified environmental and carbon testing laboratory located in Los Angeles, CA. USFilter's laboratory is fully equipped to provide complete quality control analyses using ASTM standard test methods in order to assure the consistent quality of all AquaCarb® carbons.

Our technical staff offers hands-on guidance in selecting the most appropriate system, operating conditions and carbon to meet your needs. For more information, contact your nearest USFilter representative.

USFilter

DATA SHEET

AQUACARB® 830
AQUACARB® 1240

Coal based granular activated carbon

(Formerly KG-401 and KG-502)

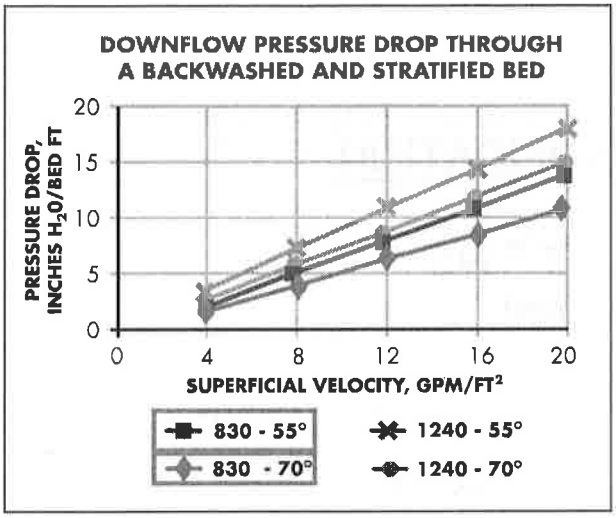

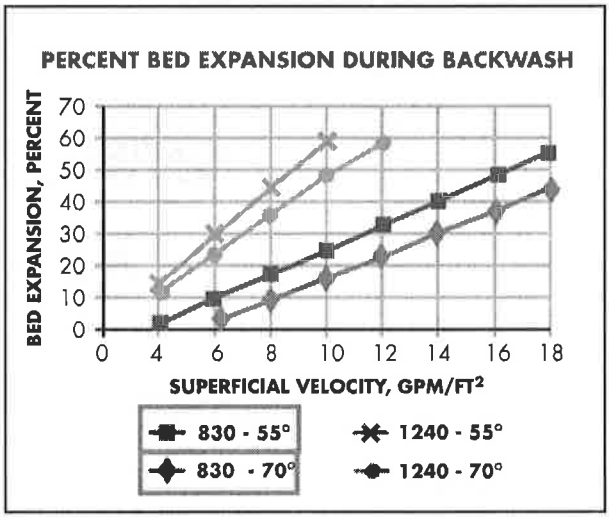

Safety Note: Wet activated carbon depletes oxygen from the air and therefore dangerously low levels of oxygen may be encountered. Whenever workers enter a vessel containing activated carbon, the vessel's oxygen content should be determined and work procedures for potentially low oxygen areas should be followed. Read Material Safety Data Sheet (MSDS) before using this product.

All information presented herein is believed reliable and in accordance with accepted engineering practices. USFilter makes no warranties as to the completeness of this information. Users are responsible for evaluating individual product suitability for specific applications. USFilter assumes no liability whatsoever for any special, indirect or consequential damages arising from the sale, resale or misuse of its products.

SPECIFICATIONS/TYPICAL PROPERTIES		
Specification	**AquaCarb® 830**	**AquaCarb® 1240**
Carbon Type	Bituminous Coal	Bituminous Coal
Mesh Size, U.S. Sieve	8 x 30	12 x 40
Effective Size, mm	0.8 - 1.1	0.55 - 0.75
Uniformity Coefficient (max)	2.1	1.9
Iodine No., mgI_2/g (min.)	900	1000
Abrasion No., Wt. % (min.)	80	80
Apparent Density, g/cc	0.46 - 0.54	0.46 - 0.54

USFilter reserves the right to change the specifications referred to in this literature at any time, without prior notice. AquaCarb is a trademark of United States Filter Corporation or its affiliates.

USFilter

Westates
Customer and
Technical Service Network:

Gulf Coast Region 800.659.1723
(Louisiana) 225.744.3153
Western Region 800.659.1771
Mid-Atlantic Region 800.659.1717
Midwest Region 708.345.7290
Northwest Region 800.659.1718
Southeast Region 225.744.3153
New England Region 800.659.1717

www.usfilter.com

WS-AQ83-DS-0704

©2004 United States Filter Corporation

USFilter

WESTATES CARBON
15319 Carmenita Avenue
Santa Fe Springs, CA 90670

TOLL FREE 800.659.1771
TELEPHONE 562.229.9606
FACSIMILE 562.229.9322

CARBON SPECIFICATION

AQUACARB™ NS
(Reactivated)

ANALYSIS	SPECIFICATIONS
Type	Reactivated Bituminous Coal
PSD, U.S. Standard Mesh Size	8x30 mesh, 5% max. over, 5% max. under
Iodine Number, mgI_2/g	850 min. 950 typical
Abrasion Number, wt. %	75 min.
Moisture as Packed, wt. %	2% max.
Apparent Density, g/cc	0.46 - 0.58

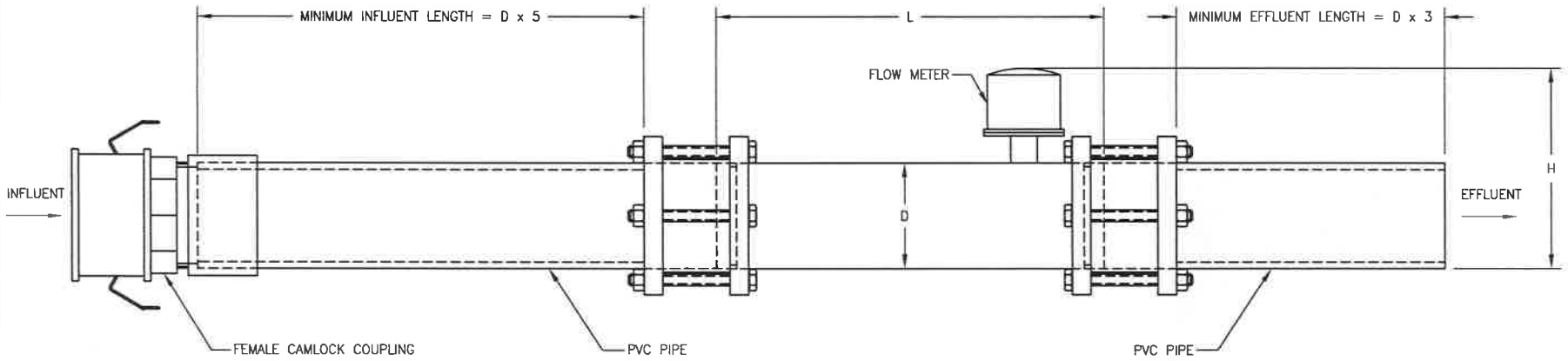

FLOW METER ASSEMBLY

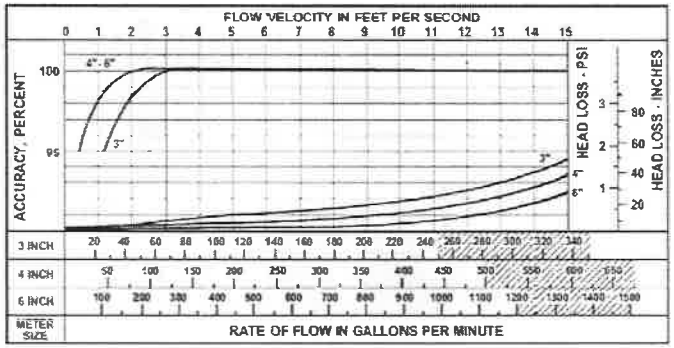

ACCURACY AND HEAD LOSS CURVES
(3"/4"/6" FLOW METERS)

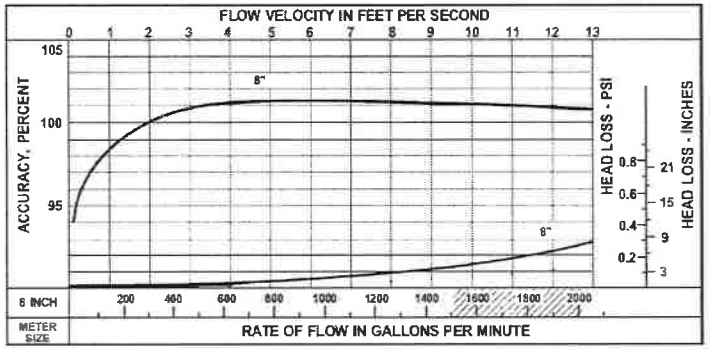

ACCURACY AND HEAD LOSS CURVES
(8" FLOW METER)

MG100 FLOW METER SPECIFICATIONS

	3	4	6	8
– METER SIZE, D (INCHES):				
– MAXIMUM FLOW U.S. GPM:	250	600	1200	1500
– MINIMUM FLOW U.S. GPM:	40	50	90	100
– HEAD LOSS IN INCHES AT MAX. FLOW:	29.50	23.00	17.00	6.75
– H (INCHES):	10.9	12.78	13.84	14.84
– L (INCHES):	13	20	20	20
– O.D. OF METER TUBE:	3.50	4.50	6.625	8.625
– MIN. INFLUENT LENGTH (INCHES):	15	20	30	40
– MIN. EFFLUENT LENGTH (INCHES):	9	12	18	24

– MAXIMUM TEMPERATURE: 160°F CONSTANT

– PRESSURE RATING: 150 PSI

NO.	REVISIONS	DATE
A	TYPICAL	01/28/09

FLOW METER ASSEMBLY STANDARD EQUIPMENT SPECIFICATION

SCALE: NTS	APPROVED BY: JB	DRAWN BY: AAV	
DATE: 01/28/09			

GROUND/WATER TREATMENT & TECHNOLOGY
P.O. BOX 1174
DENVILLE, NJ 07834

THIS DRAWING IS THE PROPERTY OF
GROUND/WATER TREATMENT & TECHNOLOGY, INC

DWG SIZE: A	SHEET: 1 OF 1	DRAWING NUMBER: ST-0052-SPC	A

T:\Cad Files\Rentals - STANDARD DRAWINGS\EQUIPMENT SPECIFICATIONS\FLOW METERS\ST-0052-SPC Rev-A Flow Meter Assembly.dwg

MORETRENCH

....since 1931

DCA-220SSVU

From stationary standby power sources to mobile construction applications, MQ Power's WhisperWatt portable generators will meet your most demanding requiremens.

WhisperWatt generators have been engineered to provide the highest reliability and maximum motor starting capability.

Performance Data

Standby Output	194 kW , 242 kVA
Prime Output	176 kW , 220 kVA
Generator RPM	1800 RPMs
Generator Design	Revolving Field Self-Ventilated Dip-Proof Single Bearing
Voltage Regulation - (No Load to Full Load)	1 %
Power Factor	0.8
Armature Connection	Star with Neutral
Excitation	Brushless with AVR
No. Poles	4 Pole
Frequency	60 Hz
Available Voltages - 3 Phase	208, 220, 240, 416,440, 480 Reconnectable Volts
Available Voltages - Single Phase	120, 127, 139, 240, 254, 277 Adjustable Volts
Amps - Single Phase 120V	488.9 (4 Wire) Amps
Amps - Single Phase 240V	244.4 (4 Wire) Amps
Amps - Three Phase 240V	529 Amps
Amps - Three Phase 480V	265 Amps
Insulation	Class F
Sound Level dB(A) - Full Load at 23 feet	72 dB(A)

Power Source

Engine Make / Model	Volvo TAD741GE

Dimensions

Overall Length	144 in. , 365 cm
Overall Width	52 in. , 130 cm
Overall Height	69 in. , 175 cm
Approx. Net Wt. Dry	7696 lbs., 3490 kg.

Appendix C

- **System Overview**

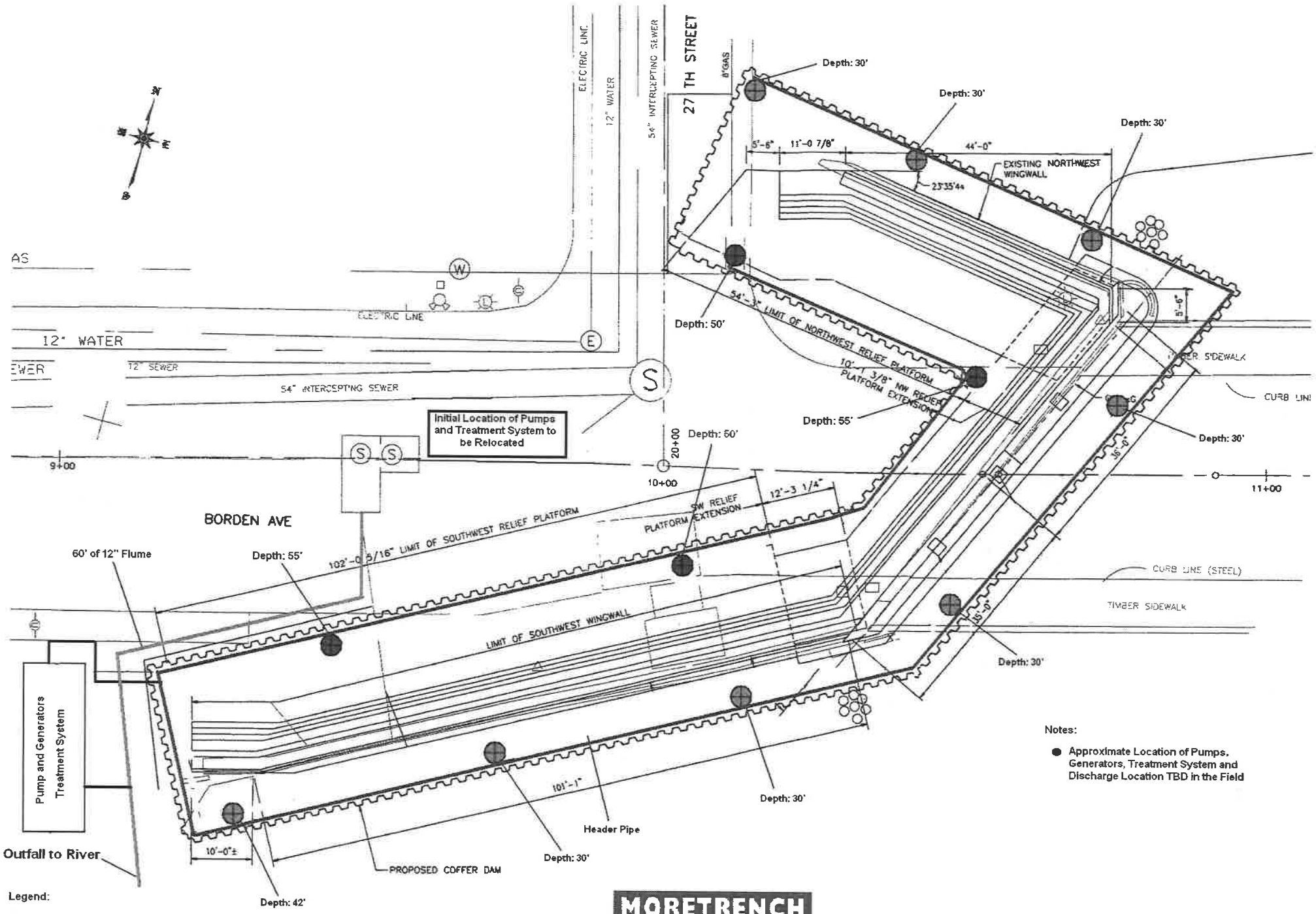

MORETRENCH

Borden Avenue
Dewatering Layout
7-9-09

MORETRENCH

....since 1931

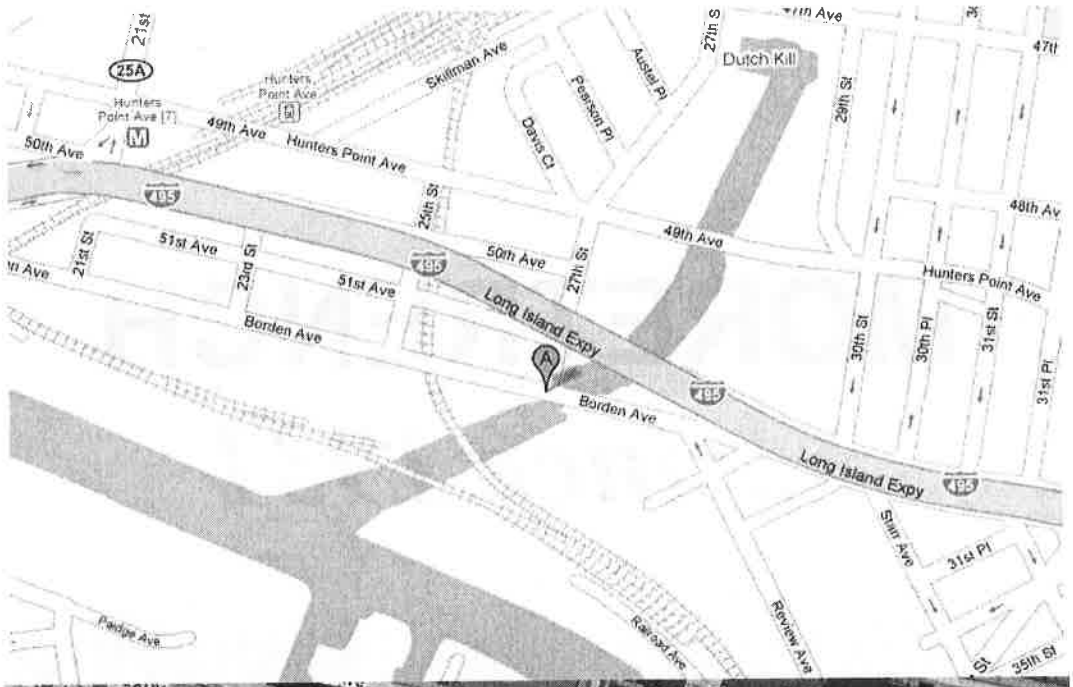

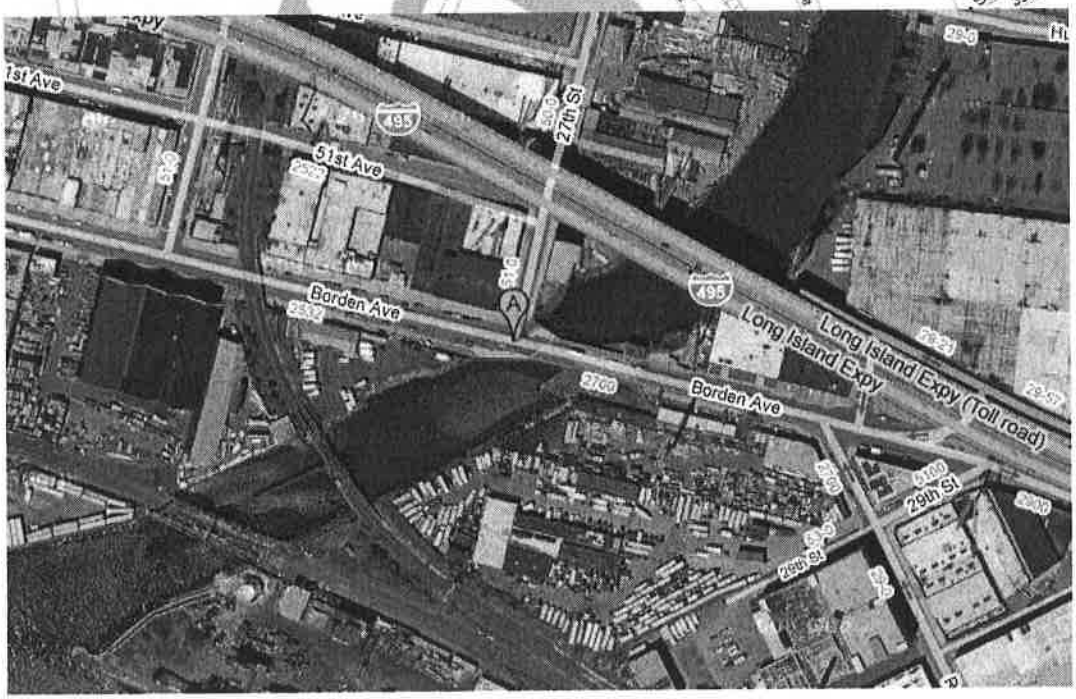

Borden Avenue Bridge
Queens, NY
7/23/09

MORETRENCH
....since 1931

- **BORED PILES & SHAFTS**
- **CUTOFF/CONTAINMENT WALLS**
- **DEWATERING**
- **GROUND FREEZING**
- **GROUNDWATER REMEDIATION**
- **INDUSTRIAL INFRASTRUCTURE**
- **LANDFILL GAS/LEACHATE SYSTEMS**
- **SOIL MODIFICATION/SOIL STABILIZATION**

APPENDIX E – SPDES PERMIT EQUIVALENT APPLICATION

New York State Department of Environmental Conservation
Division of Water
Bureau of Water Permits, 4th Floor
625 Broadway, Albany, New York 12233-3505
Phone: (518) 402-8111 • **FAX:** (518) 402-9029

Website: www.dec.state.ny.us

Denise M. Sheehan
Commissioner

SPDES PERMIT EQUIVALENT *APPLICATION* REQUIREMENTS
REMEDIATION DISCHARGES TO SURFACE OR GROUNDWATERS

To request effluent criteria for direct discharges of remediation wastewaters, please provide the following:

1. **Discharge rate (i.e. treatment system design capacity);**

- *The treatment system has been designed for the following discharge rates*
  - *864,000 gpd (Maximum)*
  - *432,000 gpd (Minimum)*
  - *720,000 gpd (Daily average)*

2. **A brief description/flow diagram for the proposed treatment system;**

- *A schematic flow diagram of the proposed system is presented in Appendix F of the project Corrective Action Plan*

3. **A description of the receiving stream, including an accurate USGS map showing the stream and discharge location. When available, provide latitude and longitude of discharge point;**

- *The receiving stream is the Dutch Kills, a tributary of the Newtown Creek. The discharge location is shown on Figure 1 – Site Location Map of the Corrective Action Plan. The discharge location is at N 40° 44' 19.98", W 73° 56' 36.97".*

4. **Available wastewater monitoring data in the attached tabular format, prepared using the attached tables 6- 10;**

- *Available wastewater sampling data is presented in attached tables as applicable.*

5. **The proposed first day of discharge (for pump test discharges please do not encourage pump tests during summer low flow periods);**

- *Due to Emergency Bridge Repair status of the Borden Avenue Bridge, the applicant requests approval to discharge as soon as possible.*

6. **Proposed duration of discharge;**

- *The discharge duration is estimated to be three months.*

7. **State whether it is a potentially responsible party, federal superfund or state superfund site, or if the site is a Brownfields site;**

- *The site is a NYSDEC Spills site.*

8. **The name and telephone number of the responsible DER project manager to contact if we have questions or want to borrow a copy of the RI report;**

- *Ms. Veronica Zhune (718) 482-7305*
  NYSDEC Division of Environmental Remediation
  Hunters Point Plaza
  47-20 21st Street
  Long Island City, NY 11101

9. **The DER Site number (i.e., 1-01-001);**

- *Spills Case Number 0903437*

10. **The DER contact/address where compliance monitoring data is to be sent;**

- *Ms. Veronica Zhune (718) 482-7305*
  NYSDEC Division of Environmental Remediation
  Hunters Point Plaza
  47-20 21st Street
  Long Island City, NY 11101

11. **For discharges that will have iron in excess of 0.3 mg/l:**
    a. provide monitoring data for iron from both filtered and unfiltered samples.
    b. If the discharge is to groundwater please provide monitoring data for iron from both filtered and unfiltered samples from monitoring wells not influenced by site contamination.
    c. If the discharge is to a relatively small stream compared to the discharge, please provide monitoring data for iron from both filtered and unfiltered samples from and upstream point of the receiving water.

- *There is no available sampling data for iron from the discharge.*

Please note that it is not unusual for a DOW review to take 8 weeks. Please inform responsible parties to plan on submitting requests for effluent criteria at least 8 weeks in advance of the proposed first day of discharge. If you have any questions or comments, please do not hesitate to call one of the following BWP section chiefs:

Al Fuchs 402-8238 (regions 1-3), Shayne Mitchell 402-8125 (regions 4-6), or Brian Baker 402-8124(regions 7-9).

TABLE 6

PRIORITY POLLUTANTS (From: 40CFR Part 122, Appendix D)

Include monitoring results for any of the pollutants listed below that are believed present in the discharge from any outfall at your facility.

GC/MS Volatile fraction compounds:

CAS #	Pollutant Name
00107-02-8	Acrolein[1]
00107-13-1	Acrylonitrile[1]
00071-43-2	Benzene
00075-25-2	Bromoform
00056-23-5	Carbon Tetrachloride
00108-90-7	Chlorobenzene
00124-48-1	Chlorodibromomethane
00075-00-3	Chloroethane
00110-75-8	2-Chloroethylvinyl ether
00067-66-3	Chloroform
00075-27-4	Dichlorobromomethane
00075-34-3	1,1-Dichloroethane
00107-06-2	1,2-Dichloroethane
00075-35-4	1,1-Dichloroethylene
00078-87-5	1,2-Dichloropropane
00542-75-6	1,3-Dichloropropylene
00100-41-4	Ethylbenzene
00074-83-9	Methyl Bromide[1]
00074-87-3	Methyl Chloride
00075-09-2	Methylene Chloride
00079-34-5	1,1,2,2-Tetrachloroethane
00127-18-4	Tetrachloroethylene
00108-88-3	Toluene
00156-60-5	1,2-trans-Dichloroethylene
00071-55-6	1,1,1-Trichloroethane
00079-00-5	1,1,2-Trichloroethane
00079-01-6	Trichloroethene
00075-01-4	Vinyl Chloride

GC/MS Acid Fraction Compounds:

CAS #	Pollutant Name
00095-57-8	2-Chlorophenol
00120-83-2	2,4-Dichlorophenol
00105-69-7	2,4-Dimethylphenol
00534-52-1	4,6-Dinitro-o-cresol[1]
00051-28-5	2,4-Dinitrophenol
00088-75-5	2-Nitrophenol
00100-02-7	4-Nitrophenol
00059-50-7	p-Chloro-m-cresol
00087-86-5	Pentachlorophenol[1]
00108-95-2	Phenol
00088-06-2	2,4,6-Trichlorophenol

GC/MS Base/Neutral fraction compounds

CAS #	Pollutant Name	
00083-32-9	**Acenaphthene**	**3.6J**
00208-96-8	**Acenaphthylene**	**2.2J**
00120-12-7	**Anthracene[1]**	**5.4J**
00092-87-5	Benzidine	
00056-55-3	**Benz(a)anthracene[1]**	**8.6J**
00050-32-8	**Benzo(a)pyrene[1]**	**5.3J**
00205-99-4	3,4-Benzofluoranthene[1]	
00191-24-2	Benzo(ghi)perylene[1]	
00207-08-9	**Benzo(k)fluoranthene**	**1.7J**
00111-91-1	Bis(2-chloroethoxy)methane	
00111-44-4	Bis(2-chloroethyl)ether	
00102-60-1	Bis(2-chloroisopropyl)ether	
00117-81-7	**Bis(2-ethylhexyl)phthalate**	**290**
00101-55-3	4-Bromophenyl phenyl ether[1]	
00085-68-7	Butylbenzyl phthalate	
00091-58-7	2-Chloronaphthalene	
07005-72-3	4-Chlorophenyl phenyl ether[1]	
00218-01-9	**Chrysene[1]**	**8.3J**
00053-70-3	**Dibenz(a,h)anthracene[1]**	**3.1J**
00095-50-1	1,2-Dichlorobenzene	
00541-73-1	1,3-Dichlorobenzene	
00106-46-7	1,4-Dichlorobenzene	
00091-94-1	3,3'-Dichlorobenzidine	
00084-66-2	Diethyl phthalate	
00131-11-3	Dimethyl phthalate	
00084-74-2	Di-n-butyl phthalate	
00606-20-2	2,6-Dinitrotoluene	
00117-84-0	Di-n-octyl phthalate	
00122-66-7	1,2-Diphenylhydrazine	
00206-44-0	**Fluroranthene[1]**	**17J**
00086-73-7	**Fluorene**	**3.5J**
00118-74-1	Hexachlorobenzene[1]	
00087-68-3	Hexachlorobutadiene[1]	
00077-47-4	Hexachlorocyclopentadiene	
00067-72-1	Hexachloroethane[1]	
00193-39-5	**Indeno(1,2,3-cd)pyrene[1]**	**4J**
00078-59-1	Isophorone	
00091-20-3	Naphthalene	1.9J
00098-95-3	Nitrobenzene	
00062-75-9	N-nitrosodimethylamine	
00621-64-7	N-nitrosodi-n-propylamine	
00086-30-6	N-nitrosodiphenylamine	
00085-01-8	**Phenanthrene[1]**	**13J**
00129-00-0	**Pyrene[1]**	**19J**
00120-82-1	1,2,4-Trichlorobenzene[1]	

GC/MS Pesticides fraction compounds:

CAS #	Pollutant Name
00309-00-2	Aldrin[1]
00319-84-6	alpha-BHC[1]
00319-85-7	beta-BHC[1]
00058-89-9	gamma-BHC (Lindane)[1]
00319-86-8	delta-BHC[1]
00057-74-9	Chlordane[1]
00050-29-3	4,4'-DDT[1]
00072-55-9	4,4'-DDE[1]
00072-54-8	4,4'-DDD[1]
00060-57-1	Dieldrin[1]
00959-98-8	alpha-Endosulfan[1]
33213-65-9	beta-Endosulfan
01031-07-8	Endosulfan sulfate
00072-20-8	Endrin[1]
07421-93-4	Endrin aldehyde
00076-44-8	Heptachlor[1]
01024-57-3	Heptachlor epoxide[1]
53469-21-9	**PCB-1242[1]** **1.6**
11097-69-1	**PCB-1254[1]** **2.3**
11104-28-2	PCB-1221[1]
11141-16-5	PCB-1232[1]
12672-29-6	PCB-1248[1]
11096-82-5	**PCB-1260[1]** **2.2**
12674-11-2	PCB-1016[1]
08001-35-2	Toxaphene[1]

Dioxin:

01764-01-6	2,3,7,8-Tetrachlorodibenzo-p-dioxin[1,2]

Metals and Other Toxic Pollutants:

CAS #	Pollutant Name	
07440-36-0	**Antimony, Total**	**16.2J**
07440-38-2	**Arsenic, Total**	**25.8**
07440-41-7	Beryllium, Total	
07440-43-9	**Cadmium Total**	**13.1**
07440-47-3	**Chromium, Total**	**101**
07440-50-8	**Copper, Total**	**290**
07439-92-1	**Lead, Total**	**280**
07439-97-6	**Mercury, Total[1]**	**0.44**
07440-02-0	**Nickel, Total**	**126**
07782-49-2	Selenium, Total	
07440-22-4	Silver, Total	
07440-28-0	Thallium, Total[1]	
07440-66-6	**Zinc, Total**	**506**
00057-12-5	Cyanide, Total	
	Phenols, Total[3]	
01332-21-4	Asbestos	

Notes: 1. These pollutants either have FDA fish flesh concentration limits, are identified as Bioaccumulative Chemicals of Concern (BCCs), or are restricted pesticides. .

2. Dioxin is not listed in Part 122, Appendix D, but is a priority pollutant.

3. Phenols, Total is not a Priority Pollutant but is considered a Toxic Substance for permit classification purposes.

TABLE 7

Other Significant Pollutants with NYSDEC Standards/Guidance Values and USEPA/NYSDEC Promulgated Analytical Methods

Include monitoring results for any of the pollutants listed below that are believed present in the discharge from any outfall at your facility.

A. Base/Neutral/Acid Compounds:

CAS Number	Parameter Name
00092-67-1	4-Aminobiphenyl
00062-53-3	Aniline
00140-57-8	Aramite
00106-47-8	4-Chloroaniline
00119-93-7	3,3'-Dimethylbenzidine
00122-09-8	α,α-Dimethylphenethylamine
00099-65-0	1,3-Dinitrobenzene
00122-39-4	Diphenylamine
00070-30-4	Hexachlorophene
01888-71-7	Hexachloropropene
00099-55-8	5-Nitro-o-toluidine
00088-74-4	2-Nitroaniline
00099-09-2	3-Nitroaniline
00100-01-6	4-Nitroaniline
00608-93-5	Pentachlorobenzene[1]
00106-50-3	1,4-Phenylenediamine
00298-02-2	Phorate
00095-94-3	1,2,4,5-Tetrachlorobenzene[1]
00095-53-4	o-Toluidine
00099-35-4	1,3,5-Trinitrobenzene, sym-

B. Conventional Compounds and Metals:

CAS Number	Parameter Name
07664-41-7	Ammonia/ammonium
24959-67-9	Bromide
	Chloride
	Color
	Coliform, Fecal
	Coliform, Total
16984-48-8	Fluoride
	Nitrogen, Nitrate
	Nitrogen, Nitrite
	Methylene Blue Active Substances
07723-14-0	Phosphorus (as P), Total
	Radioactivity
	Alpha, Total
	Beta, Total
	Radium, Total
	Radium 226, Total
	Solids, Settleable
14808-79-8	Sulfate (as SO4)
	Sulfide (as S)
14265-45-3	Sulfite (as SO3)
	Cyanide, Amenable to Chlorination
07440-47-3	Chromium, Hexavalent
07439-90-5	Aluminum, Total
07440-39-3	Barium, Total
07440-42-8	Boron, Total
07440-48-4	Cobalt, Total
07439-89-6	Iron, Total
07439-95-4	Magnesium, Total
07439-98-7	Molybdenum, Total
07439-96-5	Manganese, Total
07440-23-5	Sodium, Total
07440-31-5	Tin, Total
07440-32-6	Titanium, Total
07440-62-2	Vanadium, Total

C. Volatile Organic Compounds:

CAS Number	Parameter Name	
00067-64-1	Acetone	16 ug/L
00107-05-1	Allyl chloride	
00126-99-8	Chloroprene	
00074-95-3	Dibromomethane	
00110-57-6	trans-1,4-Dichloro-2-butene	
00075-71-8	Dichlorodifluoromethane	
00156-59-2	cis-1,2-Dichloroethylene	
10061-01-5	cis-1,3-Dichloropropene	
10061-02-6	trans-1,3-Dichloropropene	
00106-93-4	Ethylene dibromide (EDB)	
00107-21-1	Ethylene glycol	
00591-78-6	2-Hexanone	
00126-98-7	Methacrylonitrile	
00078-93-3	Methyl ethyl ketone	
00074-88-4	Methyl iodide (Iodomethane)	
00080-62-6	Methyl methacrylate	
00076-01-7	Pentachloroethane	
00110-86-1	Pyridine	
00100-42-5	Styrene	
00630-20-6	1,1,1,2-Tetrachloroethane	
00075-69-4	Trichlorofluoromethane	
00096-18-4	1,2,3-Trichloropropane	
00095-47-6	Xylene, Ortho- (1,2-)	
00108-38-3	Xylene, Meta- (1,3-)	
00106-42-3	Xylene, Para- (1,4-)	

D. Pesticides:

CAS Number	Parameter Name
15972-60-8	Alachlor
00116-06-3	Aldicarb
00834-12-8	Ametryn
02032-59-9	Aminocarb (Metacil)
01610-17-9	Atraton
01912-24-9	Atrazine
00086-50-0	Azinphosmethyl
00101-27-9	Barban
01861-40-1	Benefin
00314-40-9	Bromacil
23184-66-9	Butachlor
00133-06-2	Captan
00063-25-2	Carbaryl[1]
01563-66-2	Carbofuran[1]
00075-99-0	Dalapon
00298-03-3	Demeton (-o)[1]
00126-75-0	Demeton (-S)[1]
00333-41-5	Diazinon
00096-12-8	1,2-Dibromo-3-chloropropane
01918-00-9	Dicamba
00094-75-7	2,4-Dichlorophenoxyacetic acid (2,4-D)[1]
00088-85-7	Dinoseb[1]
00298-04-4	Disulfoton
14484-64-1	Ferbam
02164-17-2	Fluometuron
01071-83-6	Glyphosate (Roundup)[1]
00608-73-1	Hexachlorocyclohexanes
51235-04-2	Hexazinone
00465-73-6	Isodrin
33820-53-0	Isopropalin[1]
00143-50-0	Kepone
00121-75-5	Malathion
08018-01-7	Mancozeb
12427-38-2	Maneb
16752-77-5	Methomyl[1]
00072-43-5	Methoxychlor[1]
00298-00-0	Methyl parathion[1]
00094-74-6	2-Methyl-4-chloro-phenoxyacetic acid; MCPA
21087-64-9	Metribuzin
02385-85-5	Mirex[1] (Hexachloropentadiene)
00142-59-6	Nabam
23135-22-0	Oxamyl[1]
00056-38-2	Parathion[1]
00082-68-8	Pentachloronitrobenzene
01610-18-0	Prometon
01918-16-7	Propachlor
00139-40-2	Propazine
00122-42-9	Propham[1]
00122-34-9	Simazine
05902-51-2	Terbacil[1]
13071-79-9	Terbufos[1]
00093-76-5	2,4,5-Trichlorophenoxyacetic
01582-09-8	Trifluralin
12122-67-7	Zineb
00137-30-4	Ziram

Notes: 1. These pollutants either have FDA fish flesh concentration limits, are identified as Bioaccumulative Chemicals of Concern (BCCs), or are restricted pesticides.

TABLE 8

Other Significant Pollutants with USEPA/NYSDEC Promulgated Analytical Methods

Include monitoring results for any of the pollutants listed below that are believed present in the discharge from any outfall at your facility.

CAS Number	Pollutant Name
	AOP (Ambam oxidation product)
00075-05-8	Acetonitrile
00098-86-2	Acetophenone
17804-35-2	Benomyl
25057-89-0	Bentazon
00100-51-6	Benzyl alcohol
00100-44-7	Benzyl chloride
35400-43-2	Bolstar (Sulprofos)
51026-28-9	Busan 40
00128-03-0	Busan 85
07440-70-2	Calcium, Total
00128-04-1	Carbam S
10605-21-7	Carbendazim
00075-15-0	Carbon disulfide [1]
00786-19-6	Carbophenothion (Trithion) [1]
03734-48-3	Chlordene
00093-65-2	2-(4-Chloro-2-methylphenoxy)propionic acid;
00510-15-6	Chlorobenzilate
00101-21-3	Chloropropham
05836-10-2	Chloropropylate
02921-88-2	Chlorpyrifos
05598-13-0	Chlorpyrifos methyl
00056-72-4	Coumaphos
21725-46-2	Cyanazine
00094-82-6	2,4-DB
00134-62-3	DEET
02303-16-4	Diallate
00132-64-9	**Dibenzofuran 2.1J**
00097-17-6	Dichlofenthion
00099-30-9	Dichloran
00087-65-0	2,6-Dichlorophenol
00062-73-7	Dichlorvos
00115-32-2	Dicofol
00297-97-2	o,o-Diethyl-o-2-pyrazinyl phosphorothioate
00060-51-5	Dimethoate
00057-97-6	7,12-Dimethylbenz(a)anthracene
00123-91-1	1,4-Dioxane; diethylene dioxide
00078-34-2	Dioxathion
00330-54-1	Diuron
55283-68-6	Ethalfluralin
00563-12-2	Ethion
00097-63-2	Ethyl methacrylate
00062-50-0	Ethyl methane sulfonate
02593-15-9	Etridiazole
00052-85-7	Famphur
68876-78-8	Fecal Streptococci
00115-90-2	Fensulfothion
00055-38-9	Fenthion (Baytex) [1]
00101-42-8	Fenuron
04482-55-7	Fenuron-TCA
00050-00-0	Formaldehyde
07440-57-5	Gold, Total
03389-71-7	Hexachlorobicycloheptadiene
07439-88-5	Iridium, Total
00078-83-1	Isobutyl alcohol
00120-58-1	Isosafrole
00128-03-0	KN Methyl
00330-55-2	Linuron
26544-20-7	MCPA isooctyl ester
00950-10-7	Mephosfolan

CAS Number	Pollutant Name
00137-42-8	Metham
02032-65-7	Methyl carbamate; methiocarb [1]
00066-27-3	3-Methyl methanesulfonate
00953-17-3	Methyl trithion
00108-10-1	4-Methyl-2-pentanone; Methyl isobutyl ketone
00056-49-5	3-Methylcholanthrene
00091-57-6	2-Methylnaphthalene 2.5J
00095-48-7	2-Methylphenol; o-Cresol
00108-39-4	3-Methylphenol; m-Cresol
00106-44-5	4-Methylphenol; p-Cresol
07786-34-7	Mevinphos [1]
00315-18-4	Mexacarbate [1]
00150-68-5	Monuron
00140-41-0	Monuron-TCA
10595-95-6	N-Nitrosomethylethylamine
00059-89-2	N-Nitrosomorpholine
00100-75-4	N-Nitrosopiperidine
00930-55-2	N-Nitrosopyrrolidine
00300-76-5	Naled
00134-32-7	1-Naphthylamine
00091-59-8	2-Naphthylamine
00130-15-4	1,4-Napthoquinone
00555-37-3	Neburon
15339-36-3	Niacaide
00056-57-5	4-Nitroquinoline-1-oxide
07440-04-2	Osmium, Total
07440-05-3	Palladium, Total
00072-56-0	Perthane
00062-44-2	Phenacetin
	Phosphorus, Orthophosphate
00109-06-8	Picoline, alpha-
07440-06-4	Platinum, Total
07440-09-7	Potassium, Total
26399-36-0	Profluralin
07287-19-6	Prometryn
23950-58-5	Pronamide
00107-12-0	Propionitrile
00114-26-1	Propoxur
07440-15-5	Rhenium
07440-16-6	Rhodium, Total
00299-84-3	Ronnel
07440-18-8	Ruthenium, Total
00094-59-7	Safrole
26259-45-0	Secbumeton
01982-49-6	Siduron
07631-86-9	Silica, Dissolved
01014-70-6	Simetrin
00961-11-5	Stirofos [1]
08001-50-1	Strobane [1]
01918-18-9	Swep
05915-41-3	Terbuthylazine
00886-50-0	Terbutryn
00058-90-2	2,3,4,6-Tetrachlorophenol
03689-24-5	Tetraethyl dithiopyrophosphate
43121-43-3	Triadimefon
00327-98-0	Trichloronate
00095-95-4	2,4,5-Trichlorophenol
32534-95-5	2,4,5-Trichlorophenoxyacetic acid, isooctyl ester
41814-78-2	Tricyclazole
00126-68-1	o,o,o-Triethylphosphorothioate
00108-05-4	Vinyl acetate
38714-47-5	ZAC (Zinc ammonium carbonates, etc)

Notes: 1. These pollutants either have FDA fish flesh concentration limits, are identified as Bioaccumulative Chemicals of Concern (BCCs), or are restricted pesticides.

TABLE 9
Other Significant Pollutants with NYSDEC Standards/Guidance Values

Identify any of the pollutants listed below that are believed present in the discharge from any outfall at your facility on the Industrial Chemical Survey form. No USEPA/NYSDEC analytical methods have been promulgated for the pollutants in Table 9. Provide analytical results, if available, as directed in Section III Items 2.A.i. and ii. of the instructions or as an attachment to this application.

CAS Number	Pollutant Name
00079-06-1	Acrylamide
00079-10-7	Acrylic acid
01646-88-4	Aldicarb sulfone
01646-87-3	Aldicarb sulfoxide
68391-01-5	Alkyl dimethyl benzyl ammonium chloride
	Alkyl diphenyl oxide sulfonates
00095-84-1	2-Amino-para-cresol
02835-99-6	4-Amino-meta-cresol
02835-95-2	5-Amino-ortho-cresol
	Aminomethylene phosphonic acid salts
26445-05-6	Aminopyridine
00504-29-0	2-Aminopyridines
00462-08-8	3-Aminopyridines
00504-24-5	4-Aminopyridines
00108-44-1	3-Aminotoluene
00106-49-0	4-Aminotoluene
00100-66-3	Anisole
	Aryltriazoles
00103-33-3	Azobenzene
00098-87-3	Benzal chloride
00271-61-4	Benzisothiazole
00098-07-7	Benzoic trichloride
25973-55-1	2-(2-hydroxy-3,5-di-tert-pentylphenyl)Benzotriazole
00092-52-4	1,1'-Biphenyl
00542-88-1	Bis(chloromethyl)ether
	Boric acid, Borates and Metaborates
00108-86-1	Bromobenzene
00074-97-5	Bromochloromethane
31600-69-8	4-(1-methylethoxy)-1-Butanol
15798-64-8	cis-2-Butenal
00123-73-9	trans-2-Butenal
01190-76-7	cis-2-Butenenitrile
00627-26-9	trans-2-Butenenitrile
00112-34-5	Butoxyethoxyethanol
05131-66-8	Butoxypropanol
	Butyl isopropyl phthalate
02008-41-5	Butylate
00104-51-8	n-Butylbenzene
00135-98-8	sec-Butylbenzene
00098-06-6	tert-Butylbenzene
05234-68-4	Carboxin
00133-90-4	Chloramben
00118-75-2	Chloranil
	Chlorinated dibenzofurans
00460-35-5	3-Chloro-1,1,1-trifluoropropane
00095-69-2	4-Chloro-o-toluidine
00095-79-4	5-Chloro-o-toluidine
00095-51-2	2-Chloroaniline
00108-42-9	3-Chloroaniline
00098-56-6	4-Chlorobenzotrifluoride
00109-69-3	1-Chlorobutane
00107-30-2	Chloromethyl methyl ether
00088-73-3	2-Chloronitrobenzene
00121-73-3	3-Chloronitrobenzene
00100-00-5	4-Chloronitrobenzene
01897-45-6	Chlorothalonil
00095-49-8	2-Chlorotoluene
00108-41-8	3-Chlorotoluene
00106-43-4	4-Chlorotoluene
00506-68-3	Cyanogen bromide
00506-77-4	Cyanogen chloride
13560-89-9	Dechlorane Plus [1]
08065-48-3	Demeton (Systox)
00103-23-1	Di(2-ethylhexyl)adipate
10222-01-2	2,2-Dibromo-3-nitrilopropionamide
03252-43-5	Dibromoacetonitrile
00583-53-9	1,2-Dibromobenzene
00108-36-1	1,3-Dibromobenzene
00106-37-6	1,4-Dibromobenzene
00594-18-3	Dibromodichloromethane
01476-11-5	cis-1,4-Dichloro-2-butene
00328-84-7	3,4-Dichlorobenzotrifluoride
00075-71-8	Dichlorodifluoromethane
00075-43-4	Dichlorofluoromethane
00078-99-9	1,1-Dichloropropanes
00142-28-9	1,3-Dichloropropanes
00594-20-7	2,2-Dichloropropanes
00563-58-6	1,1-Dichloropropene
00098-87-3	α,α-Dichlorotoluene
32768-54-0	2,3-Dichlorotoluenes
00095-73-8	2,4-Dichlorotoluenes
19398-61-9	2,5-Dichlorotoluenes
00118-69-4	2,6-Dichlorotoluenes
00095-75-0	3,4-Dichlorotoluenes
25186-47-4	3,5-Dichlorotoluenes
00076-12-0	1,2-Difluoro-1,1,2,2-tetrachloroethane
00100-18-5	1,4-Diisopropyl benzene
00577-55-9	1,2-Diisopropylbenzene
00099-62-7	1,3-Diisopropylbenzene
00121-69-7	N,N-Dimethyl aniline
01861-32-1	Dimethyl tetrachloroterephthalate
00087-59-2	2,3-Dimethylaniline
00095-68-1	2,4-Dimethylaniline
00095-78-3	2,5-Dimethylaniline
00087-62-7	2,6-Dimethylaniline
00095-64-7	3,4-Dimethylaniline
00108-69-0	3,5-Dimethylaniline
01875-92-9	Dimethylbenzylammonium chloride
00538-39-6	4,4'-Dimethylbibenzyl
04957-14-6	4,4'-Dimethyldiphenylmethane
05197-80-8	Dimethylethylbenzylammonium chloride
00068-12-2	Dimethylformamide
25321-14-6	Dinitrotoluene (mixed isomers)
00602-01-7	2,3-Dinitrotoluene
00619-15-8	2,5-Dinitrotoluene
00610-39-9	3,4-Dinitrotoluene
00618-85-9	3,5-Dinitrotoluene
00957-51-7	Diphenamid
00530-50-7	1,1-Diphenylhydrazines
00085-00-7	Diquat dibromide
02439-10-3	Dodecylguanidine acetate
13590-97-1	Dodecylguanidine hydrochloride
00479-18-5	Dyphilline
00145-73-3	Endothall
53494-70-5	Endrin ketone
00107-07-3	Ethylene chlorohydrin
00075-21-8	Ethylene oxide
00096-45-7	Ethylenethiourea
00133-07-3	Folpet
00093-14-1	Guaifenesin
06108-10-7	Hexachlorocyclohexanes (epsilon)
00302-01-2	Hydrazine
07783-06-4	Hydrogen sulfide
00123-31-9	Hydroquinone
02809-21-4	1-Hydroxyethylidene-1,1-diphosphonic acid
29761-21-5	Isodecyl diphenyl phosphate

TABLE 9
Other Significant Pollutants with NYSDEC Standards/Guidance Values (continued)

00098-82-8	Isopropylbenzene
00527-84-4	2-Isopropyltoluene
00535-77-3	3-Isopropyltoluene
00099-87-6	4-Isopropyltoluene
	Isothiazolones, total
	Linear alkylbenzene sulfonates
00149-30-4	Mercaptobenzothiazole
00079-41-4	Methacrylic acid
04013-34-7	[1-Methoxyethyl]benzene
03558-60-9	[2-Methoxyethyl]benzene
	Methylbenz(a)anthracenes
06217-18-6	Methylene bisthiocyanate
00101-14-4	4,4'-Methylene-bis-(2-chloroaniline)
00101-61-1	4,4'-Methylene-bis-(N,N'-dimethyl)aniline
01807-55-2	4,4'-Methylene-bis-(N-methyl)aniline
00126-39-6	2-Methylethyl-1,3-dioxolane
00611-15-4	2-Methylstyrene
00100-80-1	3-Methylstyrene
00622-97-9	4-Methylstyrene
00098-83-9	α-Methylstyrene
00100-61-8	N-Methylaniline
00098-92-0	Niacinamide
04726-14-1	Nitralin
00139-13-9	Nitrilotriacetic acid
00088-72-2	2-Nitrotoluene
00099-08-1	3-Nitrotoluene
00099-99-0	4-Nitrotoluene
04685-14-7	Paraquat
40487-42-1	Pendimethalin
00101-84-8	Phenyl ether
00637-50-3	3-Phenyl-1-propene
00766-90-5	cis-1-Phenyl-1-propene
00873-66-5	trans-1-Phenyl-1-propene
00095-54-5	1,2-Phenylenediamine
00108-45-2	1,3-Phenylenediamine
00100-63-0	Phenylhydrazine
14838-15-4	Phenylpropanolamine
01918-02-1	Picloram
59536-65-1	Polybrominated biphenyls (PBBs)
00709-98-8	Propanil
00103-65-1	n-Propylbenzene
	Quaternary ammonium compounds
07440-24-6	Strontium 90
34014-18-1	Tebuthiuron
00634-66-2	1,2,3,4-Tetrachlorobenzenes [1]
00634-90-2	1,2,3,5-Tetrachlorobenzenes
02136-79-0	Tetrachloroterephthalic acid
05216-25-1	α,α,α,4-Tetrachlorotoluene
00109-99-9	Tetrahydrofuran
00058-55-9	Theophylline
00137-26-8	Thiram
00095-80-7	Toluene-2,4-diamine
00095-70-5	Toluene-2,5-diamine
00823-40-5	Toluene-2,6-diamine
29385-43-1	Tolyltriazole
00615-54-3	1,2,4-Tribromobenzene
00056-35-9	Tributyltin oxide
00634-93-5	2,4,6-Trichloroaniline
00087-61-6	1,2,3-Trichlorobenzenes
00108-70-3	1,3,5-Trichlorobenzenes
00075-69-4	Trichlorofluoromethane
00093-72-1	2,4,5-Trichlorophenoxypropionic acid (Silvex) [1]
00598-77-6	1,1,2-Trichloropropane
13116-57-9	cis-1,2,3-Trichloropropene
13116-58-0	trans-1,2,3-Trichloropropene
07359-72-0	2,3,4-Trichlorotoluene
56961-86-5	2,3,5-Trichlorotoluene
02077-46-5	2,3,6-Trichlorotoluene
06639-30-1	2,4,5-Trichlorotoluene
23749-65-7	2,4,6-Trichlorotoluene
00098-07-7	α,α,α-Trichlorotoluene
00088-66-4	α,α,2-Trichlorotoluene
00094-99-5	α,2,4-Trichlorotoluene
13940-94-8	α,α,4-Trichlorotoluene
02014-83-7	α-2,6-Trichlorotoluene
00102-47-6	α-3,4-Trichlorotoluene
26523-64-8	Trichlorotrifluoroethanes
00354-58-5	1,1,1-Trichloro-2,2,2-trifluoroethane
00076-13-1	1,1,2-Trichloro-1,2,2-trifluoroethane
00108-67-8	Trimethylbenzenes
00526-73-8	1,2,3-Trimethylbenzenes
00095-63-6	1,2,4-Trimethylbenzenes
00108-67-8	1,3,5-Trimethylbenzenes
25551-13-7	Trimethylbenzenes (mixed isomers)
01463-84-6	2,3,6-Trimethylpyridines
00108-75-8	2,4,6-Trimethylpyridines
00602-29-9	2,3,4-Trinitrotoluene
18292-97-2	2,3,6-Trinitrotoluene
00610-25-3	2,4,5-Trinitrotoluene
00118-96-7	2,4,6-Trinitrotoluene
00603-15-6	3,4,5-Trinitrotoluene
00115-86-6	Triphenyl phosphate
10028-17-8	Tritium
	Uranyl Ion

For discharges to groundwater, also include any substances to which the Principal Organic Contaminant (POC) groundwater standard applies. The POC groundwater standard includes the following classes of compounds: (1) Halogenated alkanes (includes those compounds identified by *Freon, Genatron, Halon, CFC-* and *HCFC-* prefixes in their product names); (2) Halogenated ethers; (3) Halobenzenes and substituted halobenzenes; (4) Benzene and alkyl- or nitrogen-substituted benzenes; (5) Substituted unsaturated hydrocarbons (i.e. straight or branched chain unsaturated hydrocarbon containing one of the following: halogen, aldehyde, nitrile, amide); (6) Halogenated non-aromatic cyclic hydrocarbons. See 6NYCRR Section 700.1 for additional information.

Notes: 1. These pollutants either have FDA fish flesh concentration limits, are identified as Bioaccumulative Chemicals of Concern (BCCs), or are restricted pesticides.

TABLE 10

Other Pollutants and Hazardous Substances Required to be Identified in ICS by Applicants if Present at Facility in Significant Levels

Abamectin [Avermectin B1]
Acephate
Acetic Acid
Acetic anhydride
Acetone cyanohydrin
Acetyl bromide
Acetyl chloride
Acid Compounds
Acifluorfen, sodium salt
Adipic acid
Alkalinity, Carbonate, as CaCO3
d-trans-Allethrin
Allyl alcohol
Allylamine
Aluminum oxide (fibrous form)
Aluminum phosphide
Aluminum sulfate
1-Amino-2-methylanthraquinone
2-Aminoanthraquinone
4-Aminoazobenzene
Amitraz
Amitrole
Ammonium acetate
Ammonium benzoate
Ammonium bicarbonate
Ammonium bichromate
Ammonium bifluoride
Ammonium bisulfite
Ammonium carbamate
Ammonium carbonate
Ammonium chloride
Ammonium chromate
Ammonium citrate
Ammonium fluoride
Ammonium fluoroborate
Ammonium hydroxide
Ammonium nitrate (solution)
Ammonium oxalate
Ammonium silicofluoride
Ammonium sulfamate
Ammonium sulfate (solution)
Ammonium sulfide
Ammonium sulfite
Ammonium tartrate
Ammonium thiocyanate
Ammonium thiosulfate
Amyl acetate
Anilazine
ortho-Anisidine hydrochloride
ortho-Anisidine
para-Anisidine
Antimony pentachloride
Antimony potassium tartrate
Antimony tribromide
Antimony trichloride
Antimony trifluoride
Antimony trioxide
Arsenic disulfide
Arsenic pentoxide
Arsenic trichloride
Arsenic trioxide
Arsenic trisulfide
Avitrol [1]
Azodrin
1-(3-Chloroallyl)-3,5,7-triaza-1-Azoniaadamantane chloride
Bandane
Barium cyanide
Bendiocarb
Bentazon
Benzaldehyde
Benzamide
Benzeneacetic acid
1,2-Benzenedicarboxaldehyde
Benzenepropanoic acid
Benzo(e)pyrene
Benzo(j)fluoranthene
Benzo(rst)pentaphene
Benzoic acid
Benzoic acid
Benzoic acid, ammonium salt
Benzonitrile
2-(Thiocyanomethyltrio)Benzothiazole
Benzoyl chloride
Benzoyl peroxide
Beryllium chloride
Beryllium fluoride
Beryllium nitrate
Bidrin
Bifenthrin
Bis(2-chloro-1-methylethyl)ether
1,3-Bis(methylisocyanate)cyclohexane
1,4-Bis(methylisocyanate)cyclohexane
Bis(pentabromophenyl)ether
Bismuth, Total
Bomyl
Boron trichloride
Boron trifluoride
Brodifacoum (Talon) [1]
Bromacil, lithium salt
Bromadialone (Maki) [1]
Bromethalin
Bromine
1-Bromo-1-(bromomethyl)-1,3-propane dicarbonitrile
Bromophos
Bromoxynil
Bromoxynil octanoate
Bronopol
Brucine
1,3-Butadiene
1-Butanol
Butyl acrylate
sec-Butyl alcohol
Butylacetate
Butylamine
N-Butylbenzene sulfonamide
4,4-Butyldenebis-(6-T-butyl-M-cresol)
1,2-Butylene oxide
N-Butylphthalate
Butyraldehyde
Butyric acid
4-(4-Chloro-2-methylphenoxy) Butyric
C.I. Acid Green 3
C.I. Acid Red 114
C.I. Basic Green 4
C.I. Basic Red 1
C.I. Direct Black 38
C.I. Direct Blue 218
C.I. Direct Blue 6
C.I. Direct Brown 95
C.I. Disperse Yellow 3
C.I. Food Red 15
C.I. Food Red 5
C.I. Solvent Orange 7
C.I. Solvent Yellow 14
C.I. Solvent Yellow 3
C.I. Solvent Yellow 34 (Auramine)
C.I. Vat Yellow 4
Cacodylic acid
Cadmium acetate
Cadmium bromide
Cadmium chloride
Calcium arsenate
Calcium arsenite
Calcium carbide
Calcium chromate
Calcium cyanamide
Calcium cyanide
Calcium dodecylbenzenesulfonate
Calcium hypochlorite
Caprolactam
Captafol
Carbamates
Carbazole
Carbonyl sulfide
Catechol
Chinomethionat
Chloral
Chlorendic Acid [1]
Chlorfenvinphos (Birlane)
Chlorimuron ethyl
Chlorine
Chlorine dioxide
3-Chloro-2-methyl-1-propene
4-Chloro-3,5-dimethylphenol
Chloroacetic acid
2-Chloroacetophenone
4-Chlorobenzoic acid [1]
Chlorophacinone (Rozol)
para-Chlorophenyl isocyanate
Chloropicrin
3-Chloropropionitrile
Chlorosulfonic acid
Chlorotetrafluoroethane
Chlorothymol
Chlorsulfuron
Cholecalciferol (Quintox) [1]
Chromic acetate
Chromic acid
Chromic sulfate
Chromous chloride
Cimectacarb
Clopyralid
Cobaltous bromide
Cobaltous formate
Cobaltous sulfamate
Creosote
para-Cresidine
Crotonaldehyde
Cupferron
Cupric acetate
Cupric acetoarsenite
Cupric chloride
Cupric nitrate
Cupric oxalate
Cupric sulfate
Cupric sulfate ammoniated
Cupric tartrate
Cyanogen chloride
Cycloate
Cyclohexamide (Actidone) [1]
Cyclohexane
1,4-Cyclohexane diisocyanate
Cyclohexanol
Cyclohexanone
Cyclohexanone oxime
Cyclohexene
Cyclohexylamine
Cyclopentanone
Cyclotrimethylenetrinitramine
Cyfluthrin
Cyhalothrin
2,4-DP
Daminozide (Alar) [1]
Dasanit
Dazomet
Dazomet, sodium salt
Decanal
2,4-Diaminoanisole sulfate
2,4-Diaminoanisole
4,4'-Diaminodiphenyl ether
Diaminotoluene (mixed isomers)
Dibenz(a,h)acridine
Dibenz(a,j)acridine
Dibenzo(a,e)fluoranthene
Dibenzo(a,e)pyrene
Dibenzo(a,h)pyrene
Dibenzo(a,l)pyrene
Dibenzo(c,g)carbazole, 7H-
Dibutyltin chloride
Dibutyltin dilaurate
Dichlobenil
Dichlone
2,3-Dichloro-1,4-napthoquinone (Dichlone)
1,4-Dichloro-2-butene
3,3'-Dichlorobenzidine dihydrochloride
3,3'-Dichlorobenzidine sulfate
1,4-Dichlorobutane
Dichlorophene
2,3-Dichlorophenol
2,4-Dichlorophenoxyacetic acid (2,4-D),
2,4-Dichlorophenoxyacetic acid (2,4-D), propy
2,4-Dichlorophenoxyacetic acid (2,4-D), 2-eth
2,4-Dichlorophenoxyacetic acid (2,4-D), butox
2,4-Dichlorophenoxyacetic acid (2,4-D), butyl
2,4-Dichlorophenoxyacetic acid (2,4-D), chlor
2,4-Dichlorophenoxyacetic acid (2,4-D), isopr
2,4-Dichlorophenoxyacetic acid (2,4-D), sodiu
2,4-Dichlorophenoxyacetic acid (2,4-D), isobu
2,3-Dichloropropene
2,2-Dichloropropionic acid
Dichlorotetrafluoroethane (CFC-114)
α,α-Dichlorotoluene
Diclofop methyl
Dicyclohexylamine
Dicyclopentadiene
Diepoxybutane
Diethanolamine
Diethatyl ethyl
Diethyl formamide
Diethyl maleate
Diethyl mercury
Diethyl sulfate
Diethylamine
Diethylaminoethanol
Diethyldiisocyanatobenzene
Diethylene glycol
Diethylene glycol monoethyl ether
Diethylhexylphthalate isomer
Diethyltin dycaprylate
Diflubenzuron
Diglycidyl resorcinol ether
2,3-Dihydro-1,6-dimethyl-1H-indene
2,3-Dihydro-1-methyl-1H-indene
Dihydrosafrole
4,4'-Diisocyanatodiphenyl ether
2,4'-Diisocyanatodiphenyl sulfide
Diisopropyl ether
Diisopropylamine
Dimethipin
3,3'-Dimethoxybenzidine dihydrochloride,
3,3'-Dimethoxybenzidine hydrochloride,
3,3'-Dimethoxybenzidine,
3,3'-Dimethoxybenzidine-4,4'-diisocyanate
Dimethyl chlorothiophosphate
trans-1,4-Dimethyl cyclohexane
Dimethyl sulfate
2,2-Dimethyl-2,3-Dihydro-7-Benzofuranol
3,3'- Dimethyl-4,4'-diphenylene diisocyanate
Dimethylamine
Dimethylamine dicamba
3,3'- Dimethylbenzidine dihydrochloride (o-To
3,3'-Dimethylbenzidine dihydrofluoride
Dimethylcarbamyl chloride
Dimethyldichlorosilane
Dimethyldioxane
3,3'-Dimethyldiphenylmethane-4,4'-diisocyanate
Dimethyldithiocarbamate
2,5-Dimethylfuran
1,1-Dimethylhydrazine
1,2-Dimethylhydrazine
2,6-Dimethylphenol
Dimethylphenylcarbinol
Dimethylterephthalate
ortho-Dinitrobenzene
para-Dinitrobenzene
Dinitrophenol
Dinocap [1]
Diphacinone
Dipotassium endothall
Dipropyl isocinchomeronate
Diquat
Disodium cyanodithioimidocarbonate
Di-Syston
2,4-Dithiobiuret
Dithiocarbamate
Dodecanoic acid

2,4-Dichlorophenoxyacetic acid (2,4-D), 2-ethylhexyl ester

TABLE 10 (Ctd.)

Other Pollutants and Hazardous Substances Required to be Identified in ICS by Applicants If Present at Facility in Significant Levels

Dodecene-4
Dodecylbenzesulfonic acid
Dyphonate
EDTA
EDTA, Ammoniated
EPN
Epichlorohydrin
Ethoprop
2-Ethoxyethanol
2-Ethoxyethanol acetate
Ethyl acetate
Ethyl acrylate
Ethyl chloroformate
Ethyl di-n-propylthiocarbamate (EPTC)
Ethyl ether
Ethyl mercuric chloride
Ethylene
Ethylene cyanohydrin
Ethylene dichloride
Ethylene glycol dinitrate
Ethylenediamine
Ethyleneimine (Aziridine)
Fenamiphos
Fenarimol
Fenbutatin oxide
Fenoxaprop ethyl
Fenoxycarb
Fenpropathrin
Fenvalerate
Ferric ammonium citrate
Ferric ammonium oxalate
Ferric chloride
Ferric fluoride
Ferric nitrate
Ferric sulfate
Ferricyanide
Ferrocyanide
Ferrous ammonium sulfate
Ferrous sulfate
Ferrous chloride
Fluazifop butyl
Fluoride, Complex
Fluoride, Free
Fluorine
Fluoroborates
Fluorouracil
Fluvalinate
Fomesafen
Formetanate hydrochloride (Carazol SP)[1]
Formic acid
Fumaric acid
Fumarin
Furan
Furazolidone
Furfural
Furium
Glycidaldehyde
Guthion
n-Heptane
1-Heptanol
2-Heptanol
3-Heptanol
4-Heptanol
Hexachloronaphthalene
Hexamethyl benzene
Hexamethylene diamine
Hexamethylene-1,6-diisocyanate
Hexamethylphosphoramide
Hexanate
n-Hexane
3-Hexanone
Hydramethylnon
Hydrazine sulfate
Hydrochloric acid
Hydrofluoric acid
Hydrogen cyanide
Hydrogen fluoride
Hydrogen peroxide
α-Hydroxy-α-methylbenzeneacetic acid
3-Hydroxycarbofuran
1-Hydroxyethylidene
Hydroxyquinoline, total
Imazalil
Iodide (as I)
3-Iodo-2-propynyl butylcarbamate
Iron pentacarbonyl
1,3-Isobenzofurandione
1,(3H)-Isobenzofuranone
Isobutyraldehyde
Isofenphos
Isophorone diisocyanate
Isoprene
Isopropanolamine dodecylbenzenesulfonate
Isopropyl alcohol
Isopropylamine
Isopropylbenzene hydroperoxide
4,4'-Isopropylidenediphenol
Karbutilate
Kelthane
Lactofen
Lanthanum, Total
Lead acetate
Lead arsenate
Lead chloride
Lead flourite
Lead fluoborate
Lead iodide
Lead nitrate
Lead stearate
Lead sulfate
Lead sulfide
Lead thiocyanate
Lethane 384
Lithium carbonate
Lithium chromate
Lithium, Total
2,5-Lutidine
Magnesium phosphide
Maleic anhydride
Maleic hydrazide
Malononitrile
Mercaptodimethur
Mercuric cyanide
Mercuric nitrate
Mercuric sulfate
Mercuric thiocyanate
Mercurous nitrate
Merphos
Methacrylamide
Methacrylate
Methanol
Methazole
Methoprene
Methoxone sodium salt
2-Methoxy-5-nitroaniline
2-Methoxyethanol acetate
2-Methoxyethanol
Methoxypropylamine
Methyl acetate
2-Methyl benzene sulfonamide
Methyl chlorocarbonate
Methyl isobutyl ketone
Methyl isocyanate
Methyl isothiocyanate
Methyl mercaptan
Methyl mercury
Methyl tert-butyl ether
2-Methyl-2-propanol
1-Methyl-4-(1-methyethenyl)cyclohexene
Methylamine
2-Methylanthracene
9-Methylanthracene
2-Methylbenzaldehyde
3-Methylbenzaldehyde
4-Methylbenzaldehyde
4-Methylbenzene sulfonamide
4-Methylbenzenemethanol
2-Methylbenzoic acid
3-Methylbenzoic acid
5-Methylchrysene
Methylcyclopentane
4-Methyldiphenylmethane-3,4-diisocyanate
1,1-Methylene bis(4-isocyanatocyclohexane)
Methylenebis(phenylisocyanate) (MDI)
4,4'-Methylenedianiline
1-Methylnaphthalene
Methylolmethacrylamide
Methylphthalate
Methyltrichlorosilane
Metiram
Metolachlor
Michler's ketone
Molinate
Molybdenum trioxide
Monitor
Monochlorobenzyl trifluoride
Monoethylamine
Monomethylamine
Mustard gas (1,1'-thiobis[2-chloro-]Ethane)
Myclobutanil
N-Methyl-2-pyrrolidone
N-Methylolacrylamide
N-Nitroso-N-methyl urea
N-Nitrosodi-N-butylamine
N-Nitrosodiethylamine
N-Nitrosomethylvinylamine
N-Nitrosonornicotine
1,5-Naphthalene diisocyanate
Naphthenic acid
α-Naphthyl thiourea
Nickel ammonium sulfate
Nickel chloride
Nickel hydroxide
Nickel nitrate
Nickel sulfate
Nicotine alkaloid
Nitrapyrin
Nitric acid
4-Nitrobiphenyl
Nitrocyclohexane
Nitrofen
Nitrofurans
Nitrofurantoin
Nitrofurazone
Nitrogen dioxide
Nitrogen mustard
Nitroglycerin
2-Nitropropane
1-Nitropyrene
para-Nitrosodiphenylamine
Nonanal
1-Nonanol
Norflurazon
Octachlorocyclopentene
Octachloronaphthalene
Octachlorostyrene
Octamethylpyrophosphoramine
Oryzalin
Osmium tetroxide
Oxalic acid, benzyl ester
Oxydemeton methyl
Oxydiazon
Oxyfluorfen
Ozone
Paraformeldehyde
Paraldehyde
Paraquat dichloride
Pebulate
Pentac
Pentanate
Pentobarbital sodium
Peracetic acid
Perchloromethyl mercaptan
Permethrin
Phenothrin
1,3-Phenylene diisocyanate
1,4-Phenylene diisocyanate
1,2-Phenylenediamine dihydrochloride
1,4-Phenylenediamine dihydrochloride
Phenylmercuric acetate
2-Phenylphenol
4-Phenylphenol
Phenytoin
Phosdrin
Phosgene
Phosphamidon
Phosphate, Ortho
Phosphate, as PO4
Phosphine
Phosphoric acid
Phosphorus oxychloride
Phosphorus pentasulfide
Phosphorus trichloride
Photomirex
Phthalate Esters
Picric acid
Piperonyl butoxide
Pirimiphos methyl
Pival
Polybutene(1-propene, 2-methyl homopolymer)
Polymeric diphenylmethane diisocyanate
Polymethacrylic Acid
Potassium N-methyldithiocarbamate
Potassium arsenate
Potassium arsenite
Potassium bichromate
Potassium bromate
Potassium chromate
Potassium cyanide
Potassium hydroxide
Potassium permanganate
Prodiamine
Profenofos
Propane sultone
1-Propanol
Propargite
Propargyl alcohol
1-Propene
Propetamphos
Propiconazole
β-Propiolactone
Propionaldehyde
Propionic acid
Propionic anhydride
Propylene glycol
Propylene glycol monoethyl ether
Propylene glycol monomethyl ether
Propylene oxide
Propyleneimine
Pyrethrins
Quinoline
Quinone
1,4-Quinone dioxide
Quizalofop ethyl
Randox
Reserpine
Resmethrin
Resorcinol
Rhodamine WT
Rotenone
Saccharin (manufacturing)
Schradan
Selenium oxide
Sethoxydim
Sevin
Silver nitrate
Sodium
Sodium Molybdate
Sodium Nitrite
Sodium Sulfate
Sodium adipate, disodium salt
Sodium arsenate
Sodium arsenite
Sodium azide
Sodium bichromate
Sodium bifluoride
Sodium bisulfite
Sodium chromate
Sodium cyanide
Sodium dicamba
Sodium diethyldithiocarbamate
Sodium dodecylbenzenesulfonate
Sodium fluoride
Sodium fluoroacetate
Sodium hydrosulfide
Sodium hydroxide
Sodium hypochlorite

TABLE 10 (Ctd.)

Other Pollutants and Hazardous Substances Required to be Identified in ICS by Applicants if Present at Facility in Significant Levels

Sodium methylate
Sodium nitrite
Sodium o-phenylphenoxide
Sodium pentachlorophenate
Sodium phosphate (tribasic)
Sodium selenite
Sodum phosphate (dibasic)
Strontium qhromate
Strychnine
Styrene oxide
Sulfotepp
Sulfur moriochloride
Sulfuric acid
Sulfuryl flupride (Vikane) [1]
Supracide [1]
Tellurium, Total
Temephos
Tetrachlorodiphenyl ethane (TDE)
Tetracycline hydrochloride [1]
Tetraethyl leadTetraethyl pyrophosphate [1]
Tetraethyl tin
Tetramethrin
1,2,4,5-Tetramethylbenzene
Thallium sulfate
2-(4-Thiazolyl)-1H-benzimidazole
Thioacetamide
Thiobencarb
Thiocyanate
4,4'-Thiodianiline
Thiodicarb
Thiofanox
Thiophanate ethyl
Thiophanate methyl
Thiosemicarbazide
Thiourea
Thorium dioxide
Titanium tetrachloride
Toluene diisocyanate
Toluene-2,6-diisocyanate
ortho-Toluidine hydrochloride
Tri-N-butyl phosphate
Triallate
Tribenuron methyl [1]
Tributyltin
Tributyltin fluoride
Tributyltin methacrylate
S,S,S-Tributyltrithiophosphate (DEF)
Trichlorfon
Trichloroacetyl chloride
Trichlorofon
2,4,5-Trichlorophenoxy acetic acid, (2,4,5-TP), esters
2,4,5-Trichlorophenoxy acetic acid salts
Trichlorophenoxy propanoic acid
α,α,α-Trichlorotoluene
Triclopyr triethylammonium salt
Triethanolamine dodecylbenzenesulfonate
Triethylamine
Triforine
Trimethyl phosphate
Trimethylamine
1,3,5-Trimethylbenzene
Trimethylchlorosilane
3,3,5-Trimethylcyclohexanone
2,2,4-Trimethylhexamethylene diisocyanate
2,4,4-Trimethylhexamethylene diisocyanate
2,3,5-Trimethylphenyl methylcarbamate
Triphenyltin chloride
Tris(2,3-dibromopropyl) phosphate
Trypan blue
Uranyl acetate
Uranyl nitiate
Urethane (Ethyl carbamate)
Valone (PMP) [1]
Vanadium pentoxide
Vernolate
Vinclozolin
Vinylidene chloride
Vinyl bromide
Vinyl fluoride
Vanadyl sulfate [1]
Warfarin
Zinc acetate
Zinc ammonium chloride
Zinc borate
Zinc bromide
Zinc carbonate
Zinc chloride
Zinc fluoride
Zinc formate
Zinc hydrosulfite
Zinc nitrate
Zinc phenolsulfonate [1]
Zinc phosphide
Zinc silicofluoride
Zinc sulfate
Zirconium nitrate
Zirconium potassium flouride
Zirconium sulfate
Zirconium tetrachloride
Zinc cyanide [1]
Zinophos

Notes: 1. These pollutants either have FDA fish flesh concentration limits, are identified as Bioaccumulative Chemicals of Concern (BCCs), or are restricted pesticides.

APPLICATION FOR SPDES PERMIT EQUIVALENT REQUIREMENTS

1. Conventional Monitoring Information - Table 1

The following monitoring information must be included.

Parameter	Raw Wastewater or Monitoring Well				Projected or Actual Treated Wastewater (if available)		
	Units	Min	Max	Avg	Min	Max	Avg
Flow							
pH							
BOD5							
TSS							
TDS							
TKN							
Ammonia							

2. Sampling Information - Priority Pollutants, Toxic Pollutants, and Hazardous Substances

i. Do you know or have reason to believe that any of the pollutants listed in Tables 6, 7, or 8 of the instructions are present in the discharge from this outfall?

- ☐ **Yes** - If yes, monitoring data must be included in table 2 (next pg)
- ☐ **No** - Go to Item **ii.** below.

ii. Do you know or have reason to believe that any of the pollutants listed in Table 9 or Table 10 of the instructions, or any other toxic, harmful, or injurious chemical substances not listed in Tables 6-10, are present in the discharge from this outfall?

- ☐ **Yes** - Source or reason for presence in discharge attached
- ☐ **Yes** - Quantitative or qualitative data attached
- ☐ **No**

2. Monitoring Information for Priority Pollutants, Toxic Pollutants, and Hazardous Substances - Table 2

CAS #	Parameter	Raw Wastewater or Monitoring Well				Projected or Actual Treated Wastewater (if available)		
		Units	Min	Max	Avg	Min	Max	Avg

APPENDIX F – TREATMENT SYSTEM SCHEMATIC

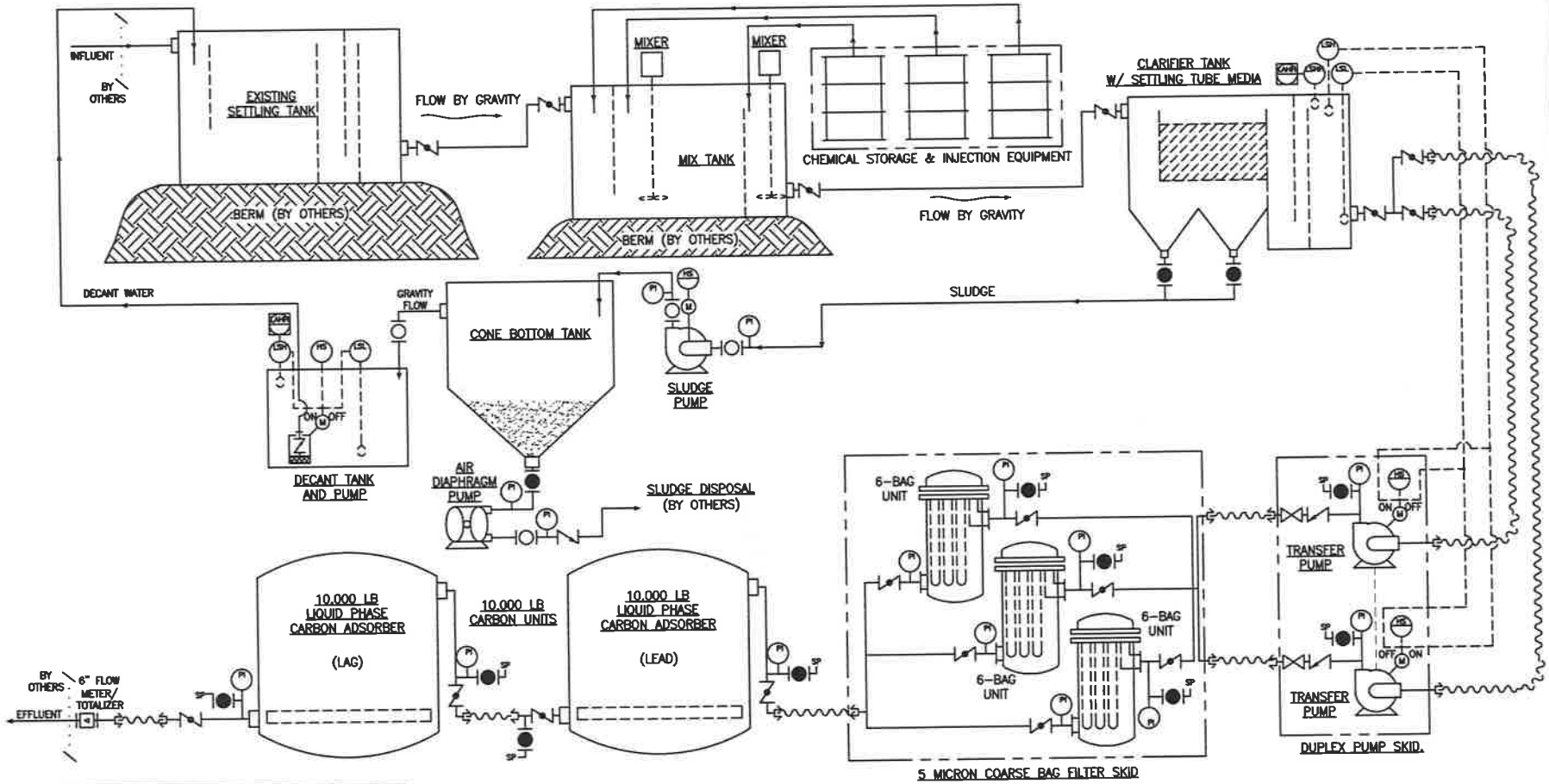

LEGEND

- PROCESS PIPING
- FLEXIBLE HOSE
- FLOW DIRECTION
- PIPE CROSS OVER
- LEVEL FLOAT
- MOTOR
- FLOW METER
- BALL VALVE (NORMALLY CLOSE)
- BUTTERFLY VALVE
- CHECK VALVE
- GATE VALVE (OPEN)
- SP SAMPLE PORT
- CAM LOCK COUPLING
- PRESSURE GAGE
- LEVEL ALARM HIGH HIGH
- LEVEL SWITCH HIGH
- LEVEL SWITCH HIGH HIGH
- LEVEL SWITCH LOW
- HAND OPERATED SWITCH

THIS DRAWING IS THE PROPERTY OF GROUND/WATER TREATMENT & TECHNOLOGY, INC.

NOTES:
1) MAXIMUM FLOWRATE = 600 GPM
2) SYSTEM FOOTPRINT APPROX. 10' X 100' + 20' X 50'
3) NOT ALL VALVES, INSTRUMENTATION AND PIPING, ETC. SHOWN FOR CLARITY.
4) GENERATOR BY GWTT. – 460V, 3 PHASE, 100 AMPS.

NO.	REVISIONS	DATE
B	PRELIMINARY DESIGN FOR REVIEW	07/02/09

MTA BORDEN AVE
BROOKLYN, NY

600 GPM PROPOSED TEMPORARY WATER TREATMENT SYSTEM

SCALE: NTS	APPROVED BY: JB	DRAWN BY: AAV	
DATE: 06/30/09			

GROUND/WATER TREATMENT & TECHNOLOGY
P.O. BOX 1174
DENVILLE, NJ 07834

DWG SIZE: A	SHEET: 1 OF 1	DRAWING NUMBER: 14-1607-PD	B

T:\Cad Files\Projects\14-JB\14-1607\14-1607-PD Rev-B MTA Borden Ave.dwg

APPENDIX G – CEMENT KILN DUST MSDS

Material Safety Data Sheet

Section 1: PRODUCT AND COMPANY INFORMATION

Product Name(s): Cement Kiln Dust

Product Identifiers: Cement Kiln Dust (CKD), Kiln Dust, Cement Lime, New Lime™.

Manufacturer:
Lafarge North America Inc.
12950 Worldgate Drive, Suite 500
Herndon, VA 20170

Information Telephone Number:
703-480-3600 (9am to 5pm EST)

Emergency Telephone Number:
1-800-451-8346 (3E Hotline)

Product Use: Kiln dust used in the manufacture of bricks, mortar, cement, concrete, plasters, paving materials, and other construction applications.

Note: This MSDS covers many types of kiln dust. Individual composition of hazardous constituents will vary between types of kiln dust.

Section 2: COMPOSITION/INFORMATION ON INGREDIENTS

Component	Percent (By Weight)	CAS Number	OSHA PEL -TWA (mg/m^3)	ACGIH TLV-TWA (mg/m^3)	LD_{50} (mouse, intraperitoneal)	LC_{50}
Portland Cement Kiln Dust	100	68475-76-3	NA	NA	NA	NA
Calcium Carbonate*	10-80	1317-65-3	15 (T); 5 (R)	10 (T)	NA	NA
Calcium Oxide	5-50	1305-78-8	5 (T)	2 (T)	3059 mg/kg	NA
Crystalline Silica	0-10	14808-60-7	[(10) / (%SiO_2+2)] (R); [(30) / (%SiO_2+2)] (T)	0.05 (R)	NA	NA
Magnesium Oxide	0-2	1309-48-4	15 (T)	10 (T)	NA	NA

Note: Exposure limits for components noted with an * contain no asbestos and <1% crystalline silica

Cement is made from materials mined from the earth and is processed using energy provided by fuels. Trace amounts of chemicals may be detected during chemical analysis of cement and cement kiln dust. For example, cement kiln dust may contain trace amounts of potassium and sodium sulfate compounds, chromium compounds, nickel compounds, and other trace compounds.

Section 3: HAZARD IDENTIFICATION

WARNING

Corrosive - Causes severe burns.
Toxic - Harmful by inhalation.
(Contains crystalline silica)

Use proper engineering controls, work practices, and personal protective equipment to prevent exposure to wet or dry product.

Read MSDS for details.

Respiratory Protection

Eye Protection

Waterproof Gloves

Waterproof Boots

Section 3: HAZARD IDENTIFICATION (continued)

Emergency Overview: Kiln dust is a solid, grey or tan, odorless powder. It is not combustible or explosive. A single, short-term exposure to the dry powder presents little or no hazard. Exposure of sufficient duration to wet kiln dust, or to dry kiln dust on moist areas of the body, can cause serious, potentially irreversible tissue (skin, eye, respiratory tract) damage due to chemical (caustic) burns, including third degree burns.

Potential Health Effects:

Eye Contact: Airborne dust may cause immediate or delayed irritation or inflammation. Eye contact with large amounts of dry powder or with wet kiln dust can cause moderate eye irritation, chemical burns and blindness. Eye exposures require immediate first aid and medical attention to prevent significant damage to the eye.

Skin Contact: Kiln dust may cause dry skin, discomfort, irritation, severe burns, and dermatitis.

Burns: Exposure of sufficient duration to wet kiln dust, or to dry kiln dust on moist areas of the body, can cause serious, potentially irreversible damage to skin, eye, respiratory and digestive tracts due to chemical (caustic) burns, including third degree burns. A skin exposure may be hazardous even if there is no pain or discomfort.

Kiln dust may be shipped or stored hot and can cause thermal burns to unprotected skin.

Dermatitis: Kiln dust is capable of causing dermatitis by irritation and allergy. Skin affected by dermatitis may include symptoms such as, redness, itching, rash, scaling, and cracking.

Irritant dermatitis is caused by the physical properties of kiln dust including alkalinity and abrasion.

Allergic contact dermatitis is caused by sensitization to hexavalent chromium (chromate) present in kiln dust. The reaction can range from a mild rash to severe skin ulcers. Persons already sensitized may react to the first contact with kiln dust. Others may develop allergic dermatitis after years of repeated contact with kiln dust.

Inhalation (acute): Breathing dust may cause nose, throat or lung irritation, including choking, depending on the degree of exposure. Inhalation of high levels of dust can cause chemical burns to the nose, throat and lungs.

Inhalation (chronic): Risk of injury depends on duration and level of exposure.

Silicosis: This product contains crystalline silica. Prolonged or repeated inhalation of respirable crystalline silica from this product can cause silicosis, a seriously disabling and fatal lung disease. See Note to Physicians in Section 4 for further information.

Carcinogenicity: Kiln dust is not listed as a carcinogen by IARC or NTP; however, kiln dust contains trace amounts of crystalline silica and hexavalent chromium which are classified by IARC and NTP as known human carcinogens.

Autoimmune Disease: Some studies show that exposure to respirable crystalline silica (without silicosis) or that the disease silicosis may be associated with the increased incidence of several autoimmune disorders such as scleroderma (thickening of the skin), systemic lupus erythematosus, rheumatoid arthritis and diseases affecting the kidneys.

Section 3: HAZARD IDENTIFICATION (continued)

Tuberculosis: Silicosis increases the risk of tuberculosis.

Renal Disease: Some studies show an increased incidence of chronic kidney disease and end-stage renal disease in workers exposed to respirable crystalline silica.

Ingestion: Do not ingest kiln dust. Although ingestion of small quantities of kiln dust is not known to be harmful, large quantities can cause chemical burns in the mouth, throat, stomach, and digestive tract.

Medical Conditions Aggravated by Exposure: Individuals with lung disease (e.g. bronchitis, emphysema, COPD, pulmonary disease) or sensitivity to hexavalent chromium can be aggravated by exposure.

Section 4: FIRST AID MEASURES

Eye Contact: Rinse eyes thoroughly with water for at least 15 minutes, including under lids, to remove all particles. Seek medical attention for abrasions and burns.

Skin Contact: Wash with cool water and a pH neutral soap or a mild skin detergent. Seek medical attention for rash, burns, irritation, dermatitis, and prolonged unprotected exposures to wet cement or kiln dust, cement mixtures or liquids from wet cement.

Inhalation: Move person to fresh air. Seek medical attention for discomfort or if coughing or other symptoms do not subside.

Ingestion: Do not induce vomiting. If conscious, have person drink plenty of water. Seek medical attention or contact poison control center immediately.

Note to Physician: The three types of silicosis include:

- Simple chronic silicosis – which results from long-term exposure (more than 20 years) to low amounts of respirable crystalline silica. Nodules of chronic inflammation and scarring provoked by the respirable crystalline silica form in the lungs and chest lymph nodes. This disease may feature breathlessness and may resemble chronic obstructive pulmonary disease (COPD).
- Accelerated silicosis – occurs after exposure to larger amounts of respirable crystalline silica over a shorter period of time (5-15 years). Inflammation, scarring, and symptoms progress faster in accelerated silicosis than in simple silicosis.
- Acute silicosis – results from short-term exposure to very large amounts of respirable crystalline silica. The lungs become very inflamed and may fill with fluid, causing severe shortness of breath and low blood oxygen levels.

Progressive massive fibrosis may occur in simple or accelerated silicosis, but is more common in the accelerated form. Progressive massive fibrosis results from severe scarring and leads to the destruction of normal lung structures.

Section 5: FIREFIGHTING MEASURES

Flashpoint & Method: Non-combustible

General Hazard: Avoid breathing dust. Wet kiln dust and cement is caustic.

Extinguishing Media: Use extinguishing media appropriate for surrounding fire.

Firefighting Equipment: Kiln dust poses no fire-related hazard. A SCBA is recommended to limit exposures to combustion products when fighting any fire.

Combustion Products: None.

Section 6: ACCIDENTAL RELEASE MEASURES

General: Place spilled material into a container. Avoid actions that cause the kiln dust to become airborne. Avoid inhalation of kiln dust and contact with skin. Wear appropriate protective equipment as described in Section 8. Scrape wet kiln dust or cement and place in container. Allow material to dry or solidify before disposal. Do not wash kiln dust down sewage and drainage systems or into bodies of water (e.g. streams).

Waste Disposal Method: Dispose of kiln dust according to Federal, State, Provincial and Local regulations.

Section 7: HANDLING AND STORAGE

General: Keep bulk and bagged kiln dust dry until used. Stack bagged material in a secure manner to prevent falling. Bagged kiln dust and cement is heavy and poses risks such as sprains and strains to the back, arms, shoulders and legs during lifting and mixing. Handle with care and use appropriate control measures.

Engulfment hazard. To prevent burial or suffocation, do not enter a confined space, such as a silo, bin, bulk truck, or other storage container or vessel that stores or contains kiln dust. Kiln dust and cement can buildup or adhere to the walls of a confined space. The kiln dust and cement can release, collapse or fall unexpectedly.

Properly ground all pneumatic conveyance systems. The potential exists for static build-up and static discharge when moving cement powders through a plastic, non-conductive, or non-grounded pneumatic conveyance system. The static discharge may result in damage to equipment and injury to workers.

Usage: Cutting, crushing or grinding hardened cement, concrete or other crystalline silica-bearing materials will release respirable crystalline silica. Use all appropriate measures of dust control or suppression, and Personal Protective Equipment (PPE) described in Section 8 below.

Housekeeping: Avoid actions that cause the kiln dust to become airborne during clean-up such as dry sweeping or using compressed air. Use HEPA vacuum or thoroughly wet with water to clean-up dust. Use PPE described in Section 8 below.

Storage Temperature: Unlimited. **Storage Pressure:** Unlimited.

Clothing: Promptly remove and launder clothing that is dusty or wet with kiln dust. Thoroughly wash skin after exposure to dust or wet kiln dust.

Section 8: EXPOSURE CONTROLS AND PERSONAL PROTECTION

Engineering Controls: Use local exhaust or general dilution ventilation or other suppression methods to maintain dust levels below exposure limits.

Personal Protective Equipment (PPE):

Respiratory Protection: Under ordinary conditions no respiratory protection is required. Wear a NIOSH approved respirator that is properly fitted and is in good condition when exposed to dust above exposure limits.

Eye Protection: Wear ANSI approved glasses or safety goggles when handling dust or wet kiln dust to prevent contact with eyes. Wearing contact lenses when using kiln dust, under dusty conditions, is not recommended.

Section 8: EXPOSURE CONTROLS AND PERSONAL PROTECTION (continued)

Skin Protection: Wear gloves, boot covers and protective clothing impervious to water to prevent skin contact. Do not rely on barrier creams, in place of impervious gloves. Remove clothing and protective equipment that becomes saturated with wet kiln dust or cement and immediately wash exposed areas.

Section 9: PHYSICAL AND CHEMICAL PROPERTIES

Physical State:	Solid (powder).	**Evaporation Rate:**	NA.
Appearance:	Gray, tan, or white powder.	**pH (in water):**	10 – 13
Odor:	None.	**Boiling Point:**	>1000° C
Vapor Pressure:	NA.	**Freezing Point:**	None, solid.
Vapor Density:	NA.	**Viscosity:**	None, solid.
Specific Gravity:	2.6-2.8	**Solubility in Water:**	2-20%

Section 10: STABILITY AND REACTIVITY

Stability: Stable. Keep dry until use. Avoid contact with incompatible materials. Kiln dust reacts with water, resulting in a slight release of heat, depending on the amount of lime (Calcium oxide) present.

Incompatibility: Kiln dust and wet cement is alkaline and is incompatible with acids, ammonium salts and aluminum metal. Kiln dust and cement dissolves in hydrofluoric acid, producing corrosive silicon tetrafluoride gas. Kiln dust and cement reacts with water to form silicates and calcium hydroxide. Silicates react with powerful oxidizers such as fluorine, boron trifluoride, chlorine trifluoride, manganese trifluoride, and oxygen difluoride.

Hazardous Polymerization: None. **Hazardous Decomposition:** None.

Section 11 and 12: TOXICOLOGICAL AND ECOLOGICAL INFORMATION

For questions regarding toxicological and ecological information refer to contact information in Section 1.

Section 13: DISPOSAL CONSIDERATIONS

Dispose of waste and containers in compliance with applicable Federal, State, Provincial and Local regulations.

Section 14: TRANSPORT INFORMATION

This product is not classified as a Hazardous Material under U.S. DOT or Canadian TDG regulations.

Section 15: REGULATORY INFORMATION

OSHA/MSHA Hazard Communication: This product is considered by OSHA/MSHA to be a hazardous chemical and should be included in the employer's hazard communication program.

CERCLA/SUPERFUND: This product is not listed as a CERCLA hazardous substance.

EPCRA SARA Title III: This product has been reviewed according to the EPA Hazard Categories promulgated under Sections 311 and 312 of the Superfund Amendment and Reauthorization Act of 1986 and is considered a hazardous chemical and a delayed health hazard.

EPRCA SARA Section 313: This product contains none of the substances subject to the reporting requirements of Section 313 of Title III of the Superfund Amendments and Reauthorization Act of 1986 and 40 CFR Part 372.

Section 15: REGULATORY INFORMATION (continued)

RCRA:	If discarded in its purchased form, this product would not be a hazardous waste either by listing or characteristic. However, under RCRA, it is the responsibility of the product user to determine at the time of disposal, whether a material containing the product or derived from the product should be classified as a hazardous waste.
TSCA:	Kiln dust and crystalline silica are exempt from reporting under the inventory update rule.
California Proposition 65:	Crystalline silica (airborne particulates of respirable size) and Chromium (hexavalent compounds) are substances known by the State of California to cause cancer.
WHMIS/DSL:	Products containing crystalline silica and calcium carbonate are classified as D2A, E and are subject to WHMIS requirements.

Section 16: OTHER INFORMATION

Abbreviations:

>	Greater than	NA	Not Applicable
ACGIH	American Conference of Governmental Industrial Hygienists	NFPA	National Fire Protection Association
CAS No	Chemical Abstract Service number	NIOSH	National Institute for Occupational Safety and Health
CERCLA	Comprehensive Environmental Response, Compensation and Liability Act	NTP	National Toxicology Program
		OSHA	Occupational Safety and Health Administration
CFR	Code for Federal Regulations	PEL	Permissible Exposure Limit
CL	Ceiling Limit	pH	Negative log of hydrogen ion
DOT	U.S. Department of Transportation	PPE	Personal Protective Equipment
EST	Eastern Standard Time	R	Respirable Particulate
HEPA	High-Efficiency Particulate Air	RCRA	Resource Conservation and Recovery Act
HMIS	Hazardous Materials Identification System	SARA	Superfund Amendments and Reauthorization Act
IARC	International Agency for Research on Cancer	T	Total Particulate
		TDG	Transportation of Dangerous Goods
LC_{50}	Lethal Concentration	TLV	Threshold Limit Value
LD_{50}	Lethal Dose	TWA	Time Weighted Average (8 hour)
mg/m^3	Milligrams per cubic meter	WHMIS	Workplace Hazardous Materials Information System
MSHA	Mine Safety and Health Administration		

This MSDS (Sections 1-16) was revised on March 3, 2005.

An electronic version of this MSDS is available at: www.lafarge-na.com under the Products section.

Lafarge North America Inc. (LNA) believes the information contained herein is accurate; however, LNA makes no guarantees with respect to such accuracy and assumes no liability in connection with the use of the information contained herein which is not intended to be and should not be construed as legal advice or as insuring compliance with any federal, state or local laws or regulations. Any party using this product should review all such laws, rules, or regulations prior to use, including but not limited to US and Canada Federal, Provincial and State regulations.

NO WARRANTY IS MADE, EXPRESS OR IMPLIED, OF MERCHANTABILITY, FITNESS FOR A PARTICULAR PURPOSE, OR OTHERWISE.

ACORD™ CERTIFICATE OF LIABILITY INSURANCE

DATE (MM/DD/YYYY): 6/26/2008

PRODUCER Phone: 610-992-3500 Fax: 610-992-3501
HUB International Pennsylvania, LLC
2 West Lafayette Street
Suite 400
Norristown PA 19401

INSURED
Clean Earth, Inc.
(Named Insureds cont'd below)
334 South Warminster Road
Hatboro PA 19040

THIS CERTIFICATE IS ISSUED AS A MATTER OF INFORMATION ONLY AND CONFERS NO RIGHTS UPON THE CERTIFICATE HOLDER. THIS CERTIFICATE DOES NOT AMEND, EXTEND OR ALTER THE COVERAGE AFFORDED BY THE POLICIES BELOW.

INSURERS AFFORDING COVERAGE	NAIC #
INSURER A: Zurich American Insurance Comp	16535
INSURER B: Steadfast Insurance Company	26387
INSURER C:	
INSURER D:	
INSURER E:	

COVERAGES

THE POLICIES OF INSURANCE LISTED BELOW HAVE BEEN ISSUED TO THE INSURED NAMED ABOVE FOR THE POLICY PERIOD INDICATED. NOTWITHSTANDING ANY REQUIREMENT, TERM OR CONDITION OF ANY CONTRACT OR OTHER DOCUMENT WITH RESPECT TO WHICH THIS CERTIFICATE MAY BE ISSUED OR MAY PERTAIN, THE INSURANCE AFFORDED BY THE POLICIES DESCRIBED HEREIN IS SUBJECT TO ALL THE TERMS, EXCLUSIONS AND CONDITIONS OF SUCH POLICIES. AGGREGATE LIMITS SHOWN MAY HAVE BEEN REDUCED BY PAID CLAIMS.

INSR LTR	ADD'L INSRD	TYPE OF INSURANCE	POLICY NUMBER	POLICY EFFECTIVE DATE (MM/DD/YY)	POLICY EXPIRATION DATE (MM/DD/YY)	LIMITS	
A		GENERAL LIABILITY X COMMERCIAL GENERAL LIABILITY CLAIMS MADE X OCCUR GEN'L AGGREGATE LIMIT APPLIES PER POLICY PRO-JECT LOC	GLO905269802	6/30/2008	6/30/2009	EACH OCCURRENCE DAMAGE TO RENTED PREMISES (Ea occurrence) MED EXP (Any one person) PERSONAL & ADV INJURY GENERAL AGGREGATE PRODUCTS - COMP/OP AGG	$1,000,000 $500,000 $10,000 $1,000,000 $2,000,000 $2,000,000
A		AUTOMOBILE LIABILITY X ANY AUTO ALL OWNED AUTOS SCHEDULED AUTOS X HIRED AUTOS X NON-OWNED AUTOS X Comp $1000 X Coll $1000	BAP905270002	6/30/2008	6/30/2009	COMBINED SINGLE LIMIT (Ea accident) BODILY INJURY (Per person) BODILY INJURY (Per accident) PROPERTY DAMAGE (Per accident)	$1,000,000 $ $ $
		GARAGE LIABILITY ANY AUTO				AUTO ONLY - EA ACCIDENT OTHER THAN AUTO ONLY EA ACC AGG	$ $ $
B		EXCESS/UMBRELLA LIABILITY X OCCUR CLAIMS MADE DEDUCTIBLE X RETENTION $10,000	SEO905270302	6/30/2008	6/30/2009	EACH OCCURRENCE AGGREGATE	$20,000,000 $20,000,000 $ $ $
A		WORKERS COMPENSATION AND EMPLOYERS' LIABILITY ANY PROPRIETOR/PARTNER/EXECUTIVE OFFICER/MEMBER EXCLUDED? If yes, describe under SPECIAL PROVISIONS below	WC905269202	6/30/2008	6/30/2009	X WC STATU-TORY LIMITS OTH-ER E.L. EACH ACCIDENT E.L. DISEASE - EA EMPLOYEE E.L. DISEASE - POLICY LIMIT	 $1,000,000 $1,000,000 $1,000,000
B		OTHER Pollution Liability	PLC905270500	6/30/2006	6/30/2009	$10,000,000 $100,000	per claim deductible

DESCRIPTION OF OPERATIONS / LOCATIONS / VEHICLES / EXCLUSIONS ADDED BY ENDORSEMENT / SPECIAL PROVISIONS

NAMED INSUREDS CONT'D:
Allied Environment Group, Inc., 2163 Merrick Ave., Merrick, NY 11566
Clean Earth of Carteret, Inc., 24 Middlesex Ave., Carteret, NJ 07008
Clean Earth Dredging Technologies, Inc., 334 South Warminster Rd., Hatboro, PA 19040
Clean Earth of Maryland, Inc., 1469 Oak Ridge Place, Hagerstown, MD 21740
Clean Earth of New Castle, Inc., 94 Pyles Lane, New Castle, DE 19720
Continued...

CERTIFICATE HOLDER

Industrial Waste Technologies, Inc.
22 Hillary Street
W Paterson NJ 07424

CANCELLATION

SHOULD ANY OF THE ABOVE DESCRIBED POLICIES BE CANCELLED BEFORE THE EXPIRATION DATE THEREOF, THE ISSUING INSURER WILL ENDEAVOR TO MAIL 30 DAYS WRITTEN NOTICE TO THE CERTIFICATE HOLDER NAMED TO THE LEFT, BUT FAILURE TO DO SO SHALL IMPOSE NO OBLIGATION OR LIABILITY OF ANY KIND UPON THE INSURER, ITS AGENTS OR REPRESENTATIVES.

AUTHORIZED REPRESENTATIVE

© ACORD CORPORATION 1988

DESCRIPTION OF OPERATIONS / LOCATIONS / VEHICLES / EXCLUSIONS / SPECIAL PROVISIONS

Clean Earth of North Jersey, Inc., 115 Jacobus Ave., South Kearny, NJ 07032
Clean Earth of Philadelphia, Inc., 3201 S. 61st Street, Philadelphia, PA 19153
Clean Earth of West Virginia, Inc., 3815 South State Route 2, Friendly, WV 26146
Clean Earth of Southeast Pennsylvania, Inc., 7 Steel Road East, Morrisville, PA 19067
Where required by a written contract or agreement with Clean Earth, the following entity is included as Additional Insured for General Liability:
Industrial Waste Technologies

APPENDIX H – CLEAN EARTH FACILITY PERMIT AND SUPPORTING DOCUMENTATION

JON S. CORZINE
Governor

State of New Jersey
DEPARTMENT OF ENVIRONMENTAL PROTECTION
Solid & Hazardous Waste Program
P.O. Box 414 401 East State Street
Trenton, New Jersey 08625-0414
Telephone: (609) 984-6985 Telecopier: (609) 633-9839
http://www.state.nj.us/dep/dshw

LISA P. JACKSON
Commissioner

RECYCLING CENTER GENERAL APPROVAL FOR CLASS B RECYCLABLE MATERIALS FOR PETROLEUM CONTAMINATED SOIL

Under the provisions of N.J.S.A. 13:1E-1 *et seq.* and N.J.S.A. 13:1E-99.11 *et seq.*, known as the Solid Waste Management Act and New Jersey Statewide Mandatory Source Separation and Recycling Act, respectively, and pursuant to N.J.A.C. 7:26A-1 *et seq.*, known as the Recycling Regulations, this approval is hereby issued to:

Clean Earth of Carteret, Inc.

Facility Type:	Recycling Center for Class B Materials
Lot No.:	3.02
Block No.:	1
Municipality:	Borough of Carteret
County:	Middlesex
Facility Registration No.:	132310

This General Approval is subject to compliance with all conditions specified herein and all regulations promulgated by the Department of Environmental Protection (Department).

This General Approval shall not prejudice any claim the State may have to riparian land nor does it allow the registrant to fill or alter, or allow to be filled or altered, in any way, lands that are deemed to be riparian, wetlands, stream encroachment or flood plains, or within the Coastal Area Facility Review Act (CAFRA) zone or are subject to the Pinelands Protection Act of 1979, nor shall it allow the discharge of pollutants to waters of this State without prior acquisition of the necessary grants, permits, or approvals from the Department of Environmental Protection.

March 7, 2007
Issuance Date

Robert M. Confer, Chief
Bureau of Solid & Hazardous Waste Permitting
Solid and Hazardous Waste Program

March 7, 2012
Expiration Date

CLEANEARTH

Manifest # 341391

GLOBAL JOB NUMBER: 108580 **FACILITY APPROVAL NUMBER:** 93070218

Please Check One:

☐ Clean Earth of Carteret
24 Middlesex Avenue
Carteret, NJ 07008
Ph: 732-541-9909

☐ Clean Earth of Maryland
1469 Oak Ridge Place
Hagerstown, MD 21740
Ph: 301-791-6220

☐ Clean Earth of New Castle
94 Pyles Lane
New Castle, DE 19720
Ph: 302-427-5633

☐ Other

☐ Clean Earth of Philadelphia
3201 S. 61st Street
Philadelphia, PA 19153
Ph: 215-724-5520

☐ Clean Earth of West Virginia
3815 South State Route 2
Friendly, WV 26146
Ph: 304-652-8580

☐ Clean Earth of Southeast Pennsylvania
7 Steel Road East
Morrisville, PA 19067
Ph: 215-428-1700

Non-Hazardous Material Manifest

(Type or Print Clearly)

GENERATOR'S NAME & SITE ADDRESS: Hoyden Ave. Bridge Repair Borden Ave. @ 27th St, Long Island City, NY	GROSS WEIGHT: ☐Tons ☐Yards TARE WEIGHT: ☐Tons ☐Yards
GENERATOR'S PHONE: John Kurre 212-256-1060	NET WEIGHT: ☐Tons ☐Yards

DESCRIPTION OF MATERIAL/SAMPLE ID AND LOCATION

Petroleum Contaminated Soil

GENERATOR'S CERTIFICATION – Incomplete and/or unsigned manifests will cause the load to be delayed and/or rejected.

I hereby certify that the above named material does not contain free liquid as defined by 40 CFR Part 260.10 or any applicable state law, is not a hazardous waste as defined by 40 CFR Part 261 or any applicable state law, is not a DOT hazardous substance as defined by 49 CFR Part 172 or any applicable state law, has been fully and accurately described above, classified, packaged and is in proper condition for transportation according to all applicable state and federal regulations.

Name: Dmitriy Shvets for NYC DOT Title: Inspector

Signature: [signature] Date and Time: 6/22/09 8:05 am

TRANSPORTER

Company: Rainbow Transport Phone Number: 908-850-9642

Address: 167 Stephens St Pk Rd, Hackettstown NJ Truck # and License Plate: 204 - AM121A

Driver: DEDICA TABORDA SW Haulers Permit #:

(Type or Print Clearly) (applicable state permit #)

I hereby certify that the above named material was picked up at the site listed above.

Driver Signature: DEDICA TABORDA Date and Time: 6-22-09

DESTINATION

I hereby certify that the above named material was delivered without incident to the facility noted above.

Driver Signature: DEDICA TABORDA Date and Time: 6-22-09

I hereby certify that the above named material has been accepted at the above referenced facility.

Authorized Signature: [signature] Date and Time: 6/22/09

GENERATOR

ACORD CERTIFICATE OF LIABILITY INSURANCE

OP ID ME RAINB-1 | DATE (MM/DD/YYYY) 02/18/09

PRODUCER

LCIA INC
839 KEARNY AVE
KEARNY NJ 07032
Phone: 201-997-0060 Fax: 201-997-3378

THIS CERTIFICATE IS ISSUED AS A MATTER OF INFORMATION ONLY AND CONFERS NO RIGHTS UPON THE CERTIFICATE HOLDER. THIS CERTIFICATE DOES NOT AMEND, EXTEND OR ALTER THE COVERAGE AFFORDED BY THE POLICIES BELOW.

INSURED

Rainbow Transport Corp.
167 Stephens Park Road
Hackettstown NJ 07840

INSURERS AFFORDING COVERAGE		NAIC #
INSURER A:	Castle Point Insurance Co.	163
INSURER B:	Rochdale Insurance Company	
INSURER C:	Markel Ins Co	38970
INSURER D:		
INSURER E:		

COVERAGES

THE POLICIES OF INSURANCE LISTED BELOW HAVE BEEN ISSUED TO THE INSURED NAMED ABOVE FOR THE POLICY PERIOD INDICATED. NOTWITHSTANDING ANY REQUIREMENT, TERM OR CONDITION OF ANY CONTRACT OR OTHER DOCUMENT WITH RESPECT TO WHICH THIS CERTIFICATE MAY BE ISSUED OR MAY PERTAIN, THE INSURANCE AFFORDED BY THE POLICIES DESCRIBED HEREIN IS SUBJECT TO ALL THE TERMS, EXCLUSIONS AND CONDITIONS OF SUCH POLICIES. AGGREGATE LIMITS SHOWN MAY HAVE BEEN REDUCED BY PAID CLAIMS.

INSR LTR	ADD'L INSRD	TYPE OF INSURANCE	POLICY NUMBER	POLICY EFFECTIVE DATE (MM/DD/YY)	POLICY EXPIRATION DATE (MM/DD/YY)	LIMITS	
C		GENERAL LIABILITY X COMMERCIAL GENERAL LIABILITY CLAIMS MADE X OCCUR GEN'L AGGREGATE LIMIT APPLIES PER: POLICY PRO-JECT LOC	MPK072173	03/15/08	03/15/09	EACH OCCURRENCE DAMAGE TO RENTED PREMISES (Ea occurence) MED EXP (Any one person) PERSONAL & ADV INJURY GENERAL AGGREGATE PRODUCTS - COMP/OP AGG	$ 1,000,000 $ 50,000 $ 5,000 $ 1,000,000 $ 3,000,000 $ 2,000,000
A		AUTOMOBILE LIABILITY ANY AUTO ALL OWNED AUTOS X SCHEDULED AUTOS X HIRED AUTOS X NON-OWNED AUTOS X $1,000 Comp Ded X $1,000 Coll Ded	AC0200082 MCS 90 FORM ENDORSED CA9948 FORM ENDORSED	11/24/08	11/24/09	COMBINED SINGLE LIMIT (Ea accident) BODILY INJURY (Per person) BODILY INJURY (Per accident) PROPERTY DAMAGE (Per accident)	$ 1,000,000 $ $ $
		GARAGE LIABILITY ANY AUTO				AUTO ONLY - EA ACCIDENT OTHER THAN AUTO ONLY: EA ACC AGG	$ $ $
		EXCESS/UMBRELLA LIABILITY OCCUR CLAIMS MADE DEDUCTIBLE RETENTION $				EACH OCCURRENCE AGGREGATE	$ $
B		WORKERS COMPENSATION AND EMPLOYERS' LIABILITY ANY PROPRIETOR/PARTNER/EXECUTIVE OFFICER/MEMBER EXCLUDED? If yes, describe under SPECIAL PROVISIONS below	RWC-3170661	02/15/09	02/15/10	WC STATU-TORY LIMITS X OTH-ER E.L. EACH ACCIDENT E.L. DISEASE - EA EMPLOYEE E.L. DISEASE - POLICY LIMIT	$ $ 1,000,000 $ 1,000,000 $ 1,000,000
		OTHER					

DESCRIPTION OF OPERATIONS / LOCATIONS / VEHICLES / EXCLUSIONS ADDED BY ENDORSEMENT / SPECIAL PROVISIONS

The Workers Compensation Coverage includes All States Endorsement Coverage.
New York State is included.

CERTIFICATE HOLDER

Industrial Waste Technologies
NJ

CANCELLATION

SHOULD ANY OF THE ABOVE DESCRIBED POLICIES BE CANCELLED BEFORE THE EXPIRATION DATE THEREOF, THE ISSUING INSURER WILL ENDEAVOR TO MAIL 30 DAYS WRITTEN NOTICE TO THE CERTIFICATE HOLDER NAMED TO THE LEFT, BUT FAILURE TO DO SO SHALL IMPOSE NO OBLIGATION OR LIABILITY OF ANY KIND UPON THE INSURER, ITS AGENTS OR REPRESENTATIVES.

AUTHORIZED REPRESENTATIVE
Gus Campisano

© ACORD CORPORATION 1988

APPENDIX I – WASTE TRANSPORTER PERMIT

NEW YORK STATE DEPARTMENT OF ENVIRONMENTAL CONSERVATION
DIVISION OF SOLID & HAZARDOUS MATERIALS

PART 364
WASTE TRANSPORTER PERMIT NO. NJ-586

Pursuant to Article 27,Titles 3 and 19 of the Environmental Conservation Law and 6 NYCRR 364

PERMIT ISSUED TO:

RAINBOW TRANSPORT CORPORATION
167 STEPHENS PARK ROAD
HACKETTSTOWN, NJ 07840

CONTACT NAME: TOM JUSKUS
COUNTY: OUT OF STATE
TELEPHONE NO: (973)246-9493

PERMIT TYPE:

☐ NEW
☐ RENEWAL
■ MODIFICATION

EFFECTIVE DATE: 06/26/2009
EXPIRATION DATE: 06/27/2010
US EPA ID NUMBER:

AUTHORIZED WASTE TYPES BY DESTINATION FACILITY:
The Permittee is Authorized to Transport the Following Waste Type(s) to the Destination Facility listed :

Destination Facility	Location	Waste Type(s)
BELLMAWR WATERFRONT DEVELOPMENT	BELLMAWR , NJ	Non-Hazardous Industrial/Commercial Petroleum Contaminated Soil
CLEAN EARTH OF CARTERET	CARTERET , NJ	Petroleum Contaminated Soil
CLEAN EARTH OF NEW CASTLE, INC.	NEW CASTLE , DE	Non-Hazardous Industrial/Commercial Petroleum Contaminated Soil
CLEAN EARTH OF NORTH JERSEY	SOUTH KEARNY , NJ	Non-Hazardous Industrial/Commercial Asbestos Petroleum Contaminated Soil
CLEAN EARTH OF PHILADELPHIA	PHILADELPHIA , PA	Non-Hazardous Industrial/Commercial Petroleum Contaminated Soil
CLEAN EARTH OF SOUTHEASTERN PA., INC.	MORRISVILLE , PA	Non-Hazardous Industrial/Commercial Petroleum Contaminated Soil
COPLAY AGGREGATES	WHITEHALL , PA	Non-Hazardous Industrial/Commercial Petroleum Contaminated Soil
DEEP GREEN OF NEW YORK	NEW WINDSOR , NY	Non-Hazardous Industrial/Commercial Petroleum Contaminated Soil
DURAPORT MARINE & RAIL	BAYONNE , NJ	Non-Hazardous Industrial/Commercial Petroleum Contaminated Soil
EGMI OF NEW JERSEY	KEASBAY , NJ	Non-Hazardous Industrial/Commercial Petroleum Contaminated Soil

*** AUTHORIZED WASTE TYPES BY DESTINATION FACILITY LISTING (continued on next page) ***

NOTE: By acceptance of this permit, the permittee agrees that the permit is contingent upon strict compliance with the Environmental Conservation Law, all applicable regulations, and the General Conditions printed on the back of this page.

ADDRESS:

New York State Department of Environmental Conservation
Division of Solid & Hazardous Materials - Waste Transporter Program
625 Broadway, 9th Floor
Albany, NY 12233-7253

AUTHORIZED SIGNATURE: _____ Date: JUN 29 2009

NEW YORK STATE DEPARTMENT OF ENVIRONMENTAL CONSERVATION
DIVISION OF SOLID & HAZARDOUS MATERIALS

PART 364
WASTE TRANSPORTER PERMIT NO. NJ-586

Pursuant to Article 27,Titles 9 and 15 of the Environmental Conservation Law and 6 NYCRR 364

PERMIT ISSUED TO:

RAINBOW TRANSPORT CORPORATION
167 STEPHENS PARK ROAD
HACKETTSTOWN, NJ 07840

CONTACT NAME: TOM JUSKUS
COUNTY: OUT OF STATE
TELEPHONE NO: (973)246-9493

PERMIT TYPE:

☐ NEW
☐ RENEWAL
■ MODIFICATION

EFFECTIVE DATE: 06/26/2009
EXPIRATION DATE: 05/27/2010
US EPA ID NUMBER:

AUTHORIZED WASTE TYPES BY DESTINATION FACILITY: (Continued)
The Permittee is Authorized to Transport the Following Waste Type(s) to the Destination Facility listed :

Destination Facility	Location	Waste Type(s)
GROWS LANDFILL(WASTE MGT.)	MORRISVILLE , PA	Non-Hazardous Industrial/Commercial Petroleum Contaminated Soil
HAZLETON CREEK PROPERTIES,LLC	HAZLETON , PA	Non-Hazardous Industrial/Commercial Petroleum Contaminated Soil
MID ATLANTIC RECYCLING TECHNOLOGIES	VINELAND , NJ	Non-Hazardous Industrial/Commercial Petroleum Contaminated Soil
PURE SOIL TECHNOLOGIES	JACKSON , NJ	Petroleum Contaminated Soil Petroleum Contaminated Soil
SLRD COMPANY MULLICA HILL, LLC	MULLICA HILL , NJ	Petroleum Contaminated Soil
SOIL SAFE, INC.	LOGAN TOWNSHIP , NJ	Non-Hazardous Industrial/Commercial Petroleum Contaminated Soil
WASTE MANAGEMENT - TULLYTOWN	MORRISVILLE , PA	Non-Hazardous Industrial/Commercial Petroleum Contaminated Soil

NEW YORK STATE DEPARTMENT OF ENVIRONMENTAL CONSERVATION
DIVISION OF SOLID & HAZARDOUS MATERIALS

PART 364
WASTE TRANSPORTER PERMIT NO. NJ-586

Pursuant to Article 27, Titles 3 and 15 of the Environmental Conservation Law and 6 NYCRR 364

PERMIT ISSUED TO:

RAINBOW TRANSPORT CORPORATION
167 STEPHENS PARK ROAD
HACKETTSTOWN, NJ 07840

CONTACT NAME: TOM JUSKUS
COUNTY: OUT OF STATE
TELEPHONE NO: (973)248-9493

PERMIT TYPE:

☐ NEW
☐ RENEWAL
■ MODIFICATION

EFFECTIVE DATE: 06/26/2009
EXPIRATION DATE: 05/27/2010
US EPA ID NUMBER:

AUTHORIZED VEHICLES:

The Permittee is Authorized to Operate the Following Vehicles to Transport Waste:
(Vehicles enclosed in <>'s are authorized to haul Residential Raw Sewage and/or Septage only)

79 (Seventy Nine) Permitted Vehicle(s)

NJ AJ176S
NJ AJ176S
NJ AJ660T
NJ AJ661T
NJ AK383T
NJ AK385T
NJ AK386T
NJ AK384W
NJ AK456Y
NJ AK457Y
NJ AK503Z
NJ AK532T
NJ AK533T
NJ AK534T
NJ AK535T
NJ AK659X
NJ AK660X
NJ AK661X
NJ AL130M
NJ AL131M
NJ AL189U
NJ AL215A
NJ AL217A
NJ AL251K
NJ AL280G
NJ AL320L
NJ AL373S
NJ AL374S
NJ AL557Z
NJ AL558Z
NJ AL559Z
NJ AL560T
NJ AL599T
NJ AL599A
NJ AL600A
NJ AL612C
NJ AL638M
NJ AL639S
NJ AL640S
NJ AL654S
NJ AL655S
NJ AL688B
NJ AL689B
NJ AL674A
NJ AL725P
NJ AL726P
NJ AL730J
NJ AL772N
NJ AL773N
NJ AL774N
NJ AL777N
NJ AL778N
NJ AL803R
NJ AL805R
NJ AL806R
NJ AL807R
NJ AL808R
NJ AL862U
NJ AL863U
NJ AL864U
NJ AM120A
NJ AM121A
NJ AM122A
NJ AM161C
NJ AM162C
NJ AM191E
NJ AM192E
NJ AM193E
NJ AM194E
NJ AM283B
NJ AM284B
NJ AM285B
NJ AM288B
NJ AM363D
NJ AM489A
NJ AM635B
NJ AM636D
NJ AM637D
NJ AM638D
End of List

Attachment 5

Spill Closure Report

SPILL CLOSURE REPORT

BORDEN AVENUE BRIDGE WEST ABUTMENT AND WINGWALL RECONSTRUCTION
BORDEN AVENUE BETWEEN 27TH STREET AND REVIEW AVENUE
LONG ISLAND CITY, NEW YORK 11101

NYCDOT CONTRACT NO.: #HBQ1162E
NYSDEC SPILL NO. 0903437

STV PROJECT NO.: #0201606-0134

MARCH 1, 2011

Prepared by:

STV Incorporated
225 Park Avenue South
New York, NY 10003
Phone: (212) 777-4400
Fax: (646) 654-1861

Prepared for:

NEW YORK CITY DOT

NYCDOT
55 Water Street, 5th Floor
New York, New York 10041
Phone: (212) 839-4846
Fax: (212) 839-4925
Attn: George Klein, P.E

Appendix C – Stipulation Agreement

Appendix D – Treatment System Schematic Diagram

Appendix E – Sediment and Sludge Waste Disposal Manifests and Truck Weigh Tickets

Appendix F – Summary Table of Waste Shipments

40.739016
-73.942666

2.0 BACKGROUND

2.1 Site Description

Borden Avenue is a two-lane east-west oriented local city street extending from the East River to Greenpoint Avenue in the Borough of Queens, NY. The Borden Avenue Bridge is located just south of the Long Island Expressway between 27th Street and Review Avenue in Long Island City, NY 11101. Figure 1 provides a Site Location Map.

The Bridge, identified by the NYCDOT as B.I.N 2-24041-0, is a retractile type moveable bridge. The bridge structure carries a two-lane two-way vehicular roadway with sidewalks on each side over the Dutch Kills.

2.2 Site Background and Spill Discovery

In order to perform preliminary bridge inspection work, a cofferdam was installed around the west abutment and its wingwalls. The cofferdam allowed for the dewatering within its confines to lower the water level through a series of permitted wells and facilitate sediment excavation. The dewatering system was designed to have the groundwater pass through a settling tank and flow meter prior to discharge to the Dutch Kills. During the excavation within the cofferdam, contractor personnel detected odors. On the morning of June 19, 2009, NYCDOT discovered a sheen and noticed an odor in the dewatering settling tank. NYCDOT shut down the dewatering operation and the contractor placed oil spill booms around the outfall area to prevent migration into the Dutch Kills.

At an estimated depth from the top of the channel to 10 feet below grade, excavated sediments began exhibiting the appearance and odor of petroleum. Two samples of the impacted sediment and two water samples: one within the settling tank and one at the outfall discharge, were collected on June 19, 2009 by Environmental Planning & Management (EPM), the environmental consultant for HAKS, the project resident engineering firm for the project. The samples were sent to Test America Laboratories in Shelton, CT (Test America) for analysis on an expedited turnaround request. In addition, Moretrench collected a water sample from within the cofferdam excavation on June 19, 2009 and shipped the sample to York Analytical Laboratories of Stratford, CT. Results of both sets of samples are summarized below.

2.2.1 Summary of Sediment and Water Analytical Results

The samples collected by EPM were analyzed for petroleum fingerprint, volatile organic compounds (VOCs), semi-volatile organic compounds (SVOCs), pesticides, herbicides, and metals. STV compared the results of the samples to NYSDEC soil and groundwater standards. Specifically, soil concentrations were compared to the NYSDEC Recommended Soil Cleanup Objectives (TAGM 4046) and the State's Brownfield Cleanup, Track 1 - Unrestricted Use: Generic Soil Cleanup Table (Track 1) pursuant to 6 NYCRR Part 375-6.8. Water samples were compared to NYSDEC Technical & Operational Guidance Series (TOGS) Ambient Water Quality Standards and Guidance Values.

The preliminary fingerprint identified a mix between a No. 6 fuel oil and motor fuel. Acetone, eight individual polyaromatic hydrocarbons (PAHs), the pesticides dieldrin and endrin, and nine metals exceeded both TAGM 4046 and Track 1 objectives in both soil samples. Heptachlor epoxide also

needed to address the emergency repair, i.e. management of sediments and dewatering fluid within the cofferdam.

It was also agreed that in lieu of a complete State Pollutant Discharge Elimination System (SPDES) permit application process, NYSDEC would allow the submittal of a SPDES Permit Equivalent Application. NYSDEC established surface water discharge standards based on the contamination present in the sediments and water. A copy of the SPDES permit is contained in the CAP. The Stipulation Agreement, which contains the discharge standards issued by the NYSDEC, is presented in Appendix C.

4.0 REMEDIAL ACTIVITIES

This section summarizes the tasks completed during Site remediation and includes the following:

- Dewatering and Water Treatment;
- Sediment excavation, temporary storage, and disposal;
- Placement of Geomembrane and Fill.

4.1 Dewatering and Water Treatment

The water treatment system was designed by Moretrench to provide for sufficient constituent removal from the water to meet NYSDEC discharge requirements. The treatment system was designed for a discharge rate of 600 gallons per minute (gpm). Details and specifications for the treatment system are contained in the CAP. A schematic drawing of the treatment components is provided as Appendix D.

A summary of the general treatment components is as follows.

- One settling tank
- One Chemical Mixing Tank
- One Chemical Injection and Storage Unit
- Two Clarifiers rated for 300 gpm
- One Sludge Pump
- One Cone Bottom Tank
- Two Electric Transfer Pumps
- Three 6-bag Filter Housings in parallel operation with a 600 gpm nominal capacity each
- Two con-code Carbon Adsorbers, each with 10,000 lbs activated carbon, 600 gpm nominal capacity in series
- One 6-inch diameter flow meter with totalizer in the 90 to 1,200 gpm range
- Piping and/or flexible hosing from the existing settling tank to the flow meter.

The pumping of the dewatering wells re-commenced on December 10, 2009 after the treatment system was operational and the NYSDEC Tidal Wetlands Permit for the project was amended to include the expanded water treatment system. A pH adjustment component was added to the water treatment system on December 11, 2009 to address pH readings that exceeded the discharge limits specified in the Corrective Action Plan. This issue was communicated to the NYSDEC in a letter dated December 11, 2009. Treated effluent samples began to be collected on a weekly basis for laboratory analysis. All parameters were below the wastewater limits for surface water discharges specified in the Corrective Action Plan and Stipulation Agreement.

Upon completion of the excavation required for the bridge reconstruction, the geomembrane and stone backfill was placed and water treatment continued until August 9, 2010 at 1500 hours at which time it ceased. However, the settling tank that was required in the original NYSDEC Wetlands Permit remained in use as part of the dewatering operation. A total of 12,152,173 gallons of water were treated and discharged to the Dutch Kills. The final treated effluent sample was collected for analysis on August 3, 2010.

the project is completed. Excavations will be backfilled with clean fill and the original grade restored. The slab, tenting, and any other times pertaining to the staging area will be removed from the site.

4.3 Placement of Geomembrane and Fill

Backfilling inside the cofferdam excavation began during the week of June 21, 2010. As per the construction details approved by NYSDEC, a 1-foot layer of rounded river bed stone base was placed atop the base of the excavation followed by a 60-mil high density polyethylene (HDPE) geomembrane manufactured by GSE (GM 13-60). The geomembrane was placed both landward and seaward of the abutment and wingwalls. The geomembrane was installed with overlapped, glued seams. For the seaward side of the abutments and wingwalls, a 1-foot overlap of geomembrane was set which was topped by a 1-foot layer of rounded river bed stone to protect the fabric from sharp stones. A 2-foot overlap of geomembrane was bolted to the pike caps as per manufacturer's instructions. Large riprap stone was placed atop the 1-foot stone base on the seaward side to the approximate mud line elevation. Figure 4 provides a drawing the construction sequence for the abutment and wingwalls including placement of the geomembrane and fill on the seaward side of the abutment and wingwalls.

For the landward side of the abutment and wingwalls, the same configuration of round river bed stone base, a single layer of geomembrane, and a layer of river bed stone cover was set in place. Structural fill (NYSDOT 203.21 select structural fill) was used to backfill to approximate existing grade. Figure 5 provides backfill details for the landward side of the abutment and wingwalls.

Figure 1

Site Location Map

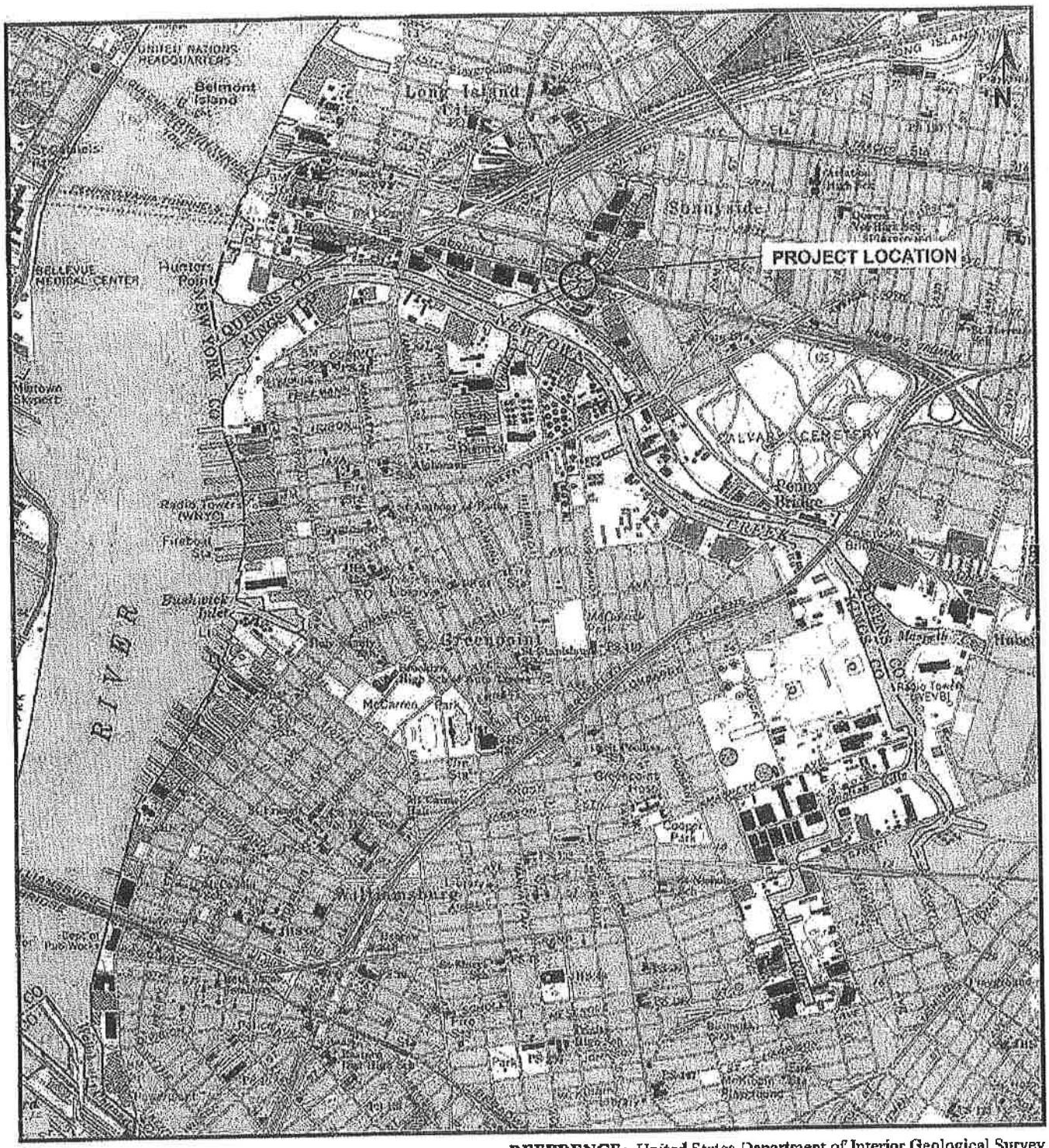

SCALE: 1" = 2,000'

0 1,000 2,000

REFERENCE: United States Department of Interior Geological Survey Brooklyn, NY (1967, Photorevised 1979)

PROJECT LOCATION MAP
BORDEN AVENUE BRIDGE OVER THE DUTCH KILLS CREEK
NEW YORK CITY DEPARTMENT OF TRANSPORTATION

Figure 2

Sediment Staging Area – Sheet 1 of 2

FED. RD. REG. NO.	STATE	FEDERAL AID PROJECT NO.	SHEET NO.	TOTAL SHEETS
	NEW YORK			XXX

EMERGENCY RECONSTRUCTION OF WEST ABUTMENT AND WINGWALLS OF BORDEN AVENUE BRIDGE OVER DUTCH KILLS

P.I.N. 84197MB983BR	QUEENS	B.I.N. 2-24041-0

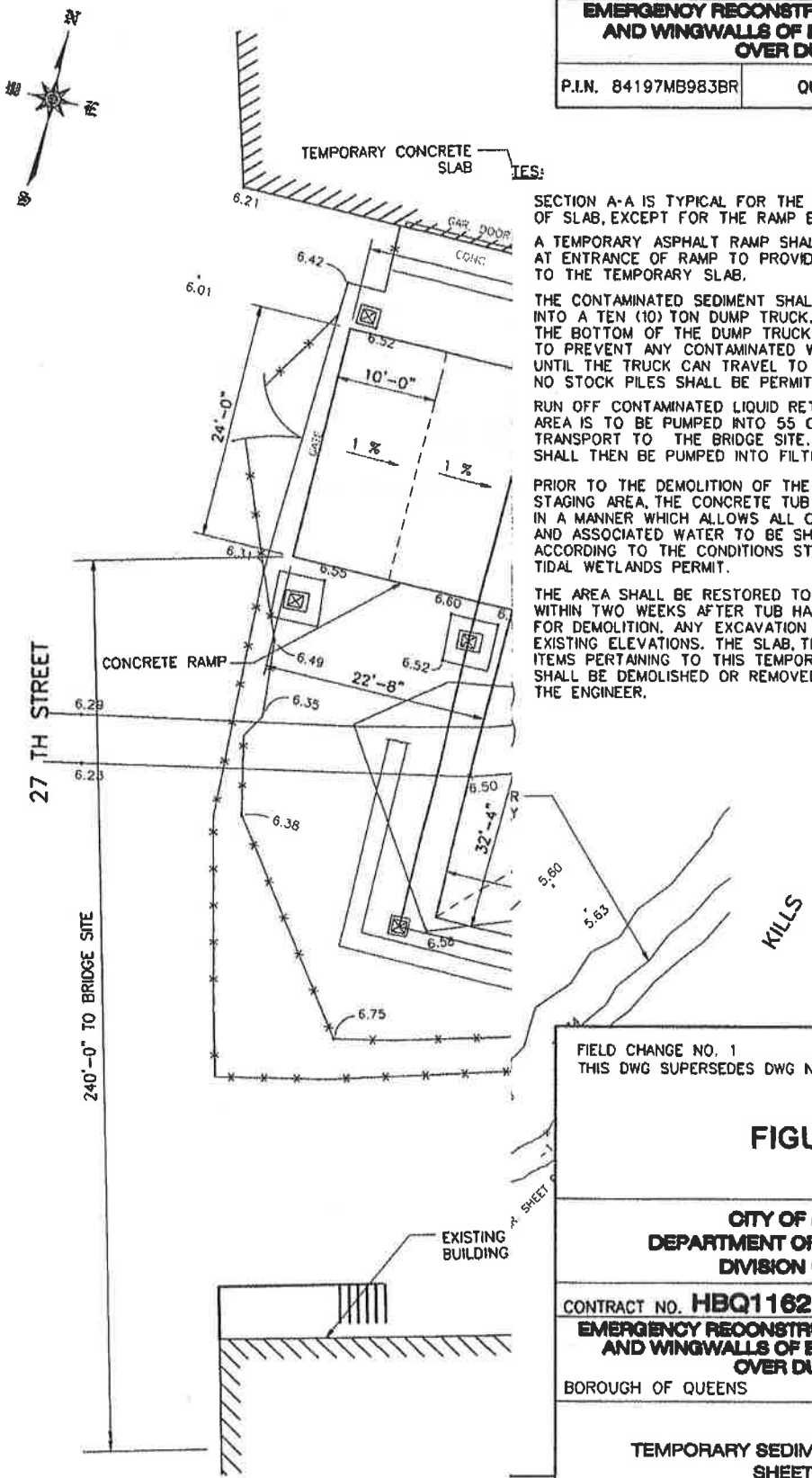

NOTES:

SECTION A-A IS TYPICAL FOR THE PERIMETER OF SLAB, EXCEPT FOR THE RAMP ENTRANCE.

A TEMPORARY ASPHALT RAMP SHALL BE PROVIDED AT ENTRANCE OF RAMP TO PROVIDE TRUCK ACCESS TO THE TEMPORARY SLAB.

THE CONTAMINATED SEDIMENT SHALL BE LOADED DIRECTLY INTO A TEN (10) TON DUMP TRUCK. KILN DUST WILL BE PLACED AT THE BOTTOM OF THE DUMP TRUCK DOOR PRIOR TO LOADING TO PREVENT ANY CONTAMINATED WATER FROM LEAKING UNTIL THE TRUCK CAN TRAVEL TO THE STORAGE AREA NO STOCK PILES SHALL BE PERMITTED.

RUN OFF CONTAMINATED LIQUID RETRIEVED IN STAGING AREA IS TO BE PUMPED INTO 55 GALLON DRUMS FOR TRUCK TRANSPORT TO THE BRIDGE SITE. THE 55 GALLON DRUMS SHALL THEN BE PUMPED INTO FILTERING SYSTEM.

PRIOR TO THE DEMOLITION OF THE TEMPORARY STAGING AREA, THE CONCRETE TUB SHALL BE CLEANED IN A MANNER WHICH ALLOWS ALL CONTAMINATED SOIL AND ASSOCIATED WATER TO BE SHIPPED OR TREATED ACCORDING TO THE CONDITIONS STATED UNDER THE TIDAL WETLANDS PERMIT.

THE AREA SHALL BE RESTORED TO ITS EXISTING CONDITION WITHIN TWO WEEKS AFTER TUB HAS BEEN PREPARED FOR DEMOLITION. ANY EXCAVATION SHALL BE FILLED TO ITS EXISTING ELEVATIONS. THE SLAB, TENT AND ANY OTHER ITEMS PERTAINING TO THIS TEMPORARY STAGING AREA SHALL BE DEMOLISHED OR REMOVED, AS DIRECTED BY THE ENGINEER.

FIELD CHANGE NO. 1 [1]
THIS DWG SUPERSEDES DWG NO. S-558 (12/29/09)

FIGURE 2

CITY OF NEW YORK
DEPARTMENT OF TRANSPORTATION
DIVISION OF BRIDGES

CONTRACT NO. **HBQ1162E**

EMERGENCY RECONSTRUCTION OF WEST ABUTMENT AND WINGWALLS OF BORDEN AVENUE BRIDGE OVER DUTCH KILLS

BOROUGH OF QUEENS B.I.N. 2-24041-0

TEMPORARY SEDIMENT STAGING AREA
SHEET 1 OF 2

DWG. NO.	SCALE	DATE	SHEET
S-558R [1]	AS NOTED	12/29/09 [1]	98

STV Incorporated
architects/engineers/planners/interior designers
225 Park Avenue South, New York, NY 10003

1/8"=1'-0"

1/7/2010 I:\Projects\Q201606\Q201606_000\1\70_Technical Documents Reports\73_Technical Reports\1606\Borden\Emergency Work\NY 03-09-09\Other Dwgs\Permit Drawings\S-558(Revised).dgn

Figure 3

Sediment Staging Area – Sheet 2 of 2

FED. RD. REG. NO.	STATE	FEDERAL AID PROJECT NO.	SHEET NO.	TOTAL SHEETS
	NEW YORK			XXX

EMERGENCY RECONSTRUCTION OF WEST ABUTMENT AND WINGWALLS OF BORDEN AVENUE BRIDGE OVER DUTCH KILLS

P.I.N. 84197MB983BR	QUEENS	B.I.N. 2-24041-0

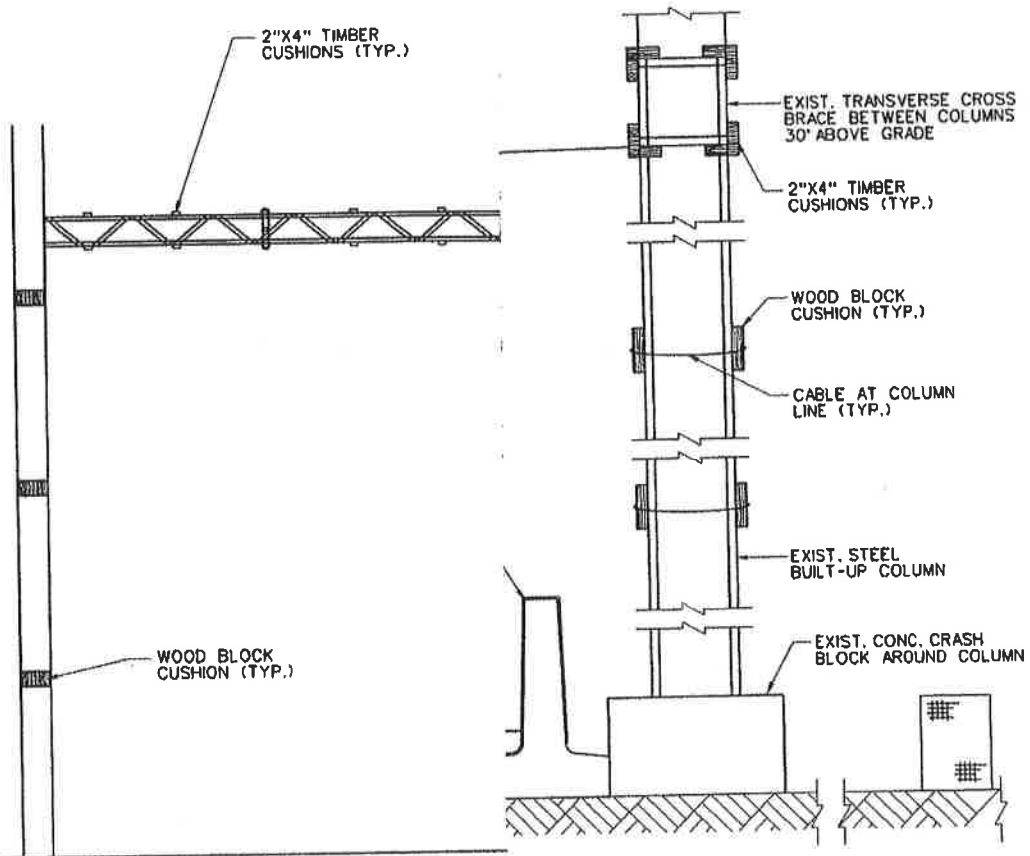

CAL BENT CROSS SECTION

SCALE: 3/4"=1'-0"

TYPIC

FIGURE 3

CITY OF NEW YORK
DEPARTMENT OF TRANSPORTATION
DIVISION OF BRIDGES

CONTRACT NO. **HBQ1162E**

EMERGENCY RECONSTRUCTION OF WEST ABUTMENT AND WINGWALLS OF BORDEN AVENUE BRIDGE OVER DUTCH KILLS

BOROUGH OF QUEENS B.I.N. 2-24041-0

TEMPORARY SEDIMENT STAGING AREA SHEET 2

DWG. NO.	SCALE AS NOTED		SHEET

8/6/2009 L:\Projects\0201606\0201606_00011\70_Technical Documents Reports\73_Technical Reports\1606\Borden\Emergency Work\NY 03-09-09\Other Dwgs\TempStaging2.dgn

Figure 4

Construction Staging Section 5 (S-359)

FED. RD. REG. NO.	STATE	FEDERAL AID PROJECT NO.	SHEET NO.	TOTAL SHEETS
	NEW YORK			XXX

EMERGENCY RECONSTRUCTION OF WEST ABUTMENT AND WINGWALLS OF BORDEN AVENUE BRIDGE OVER DUTCH KILLS

P.I.N. 84197MB983BR	QUEENS	B.I.N. 2-24041-0

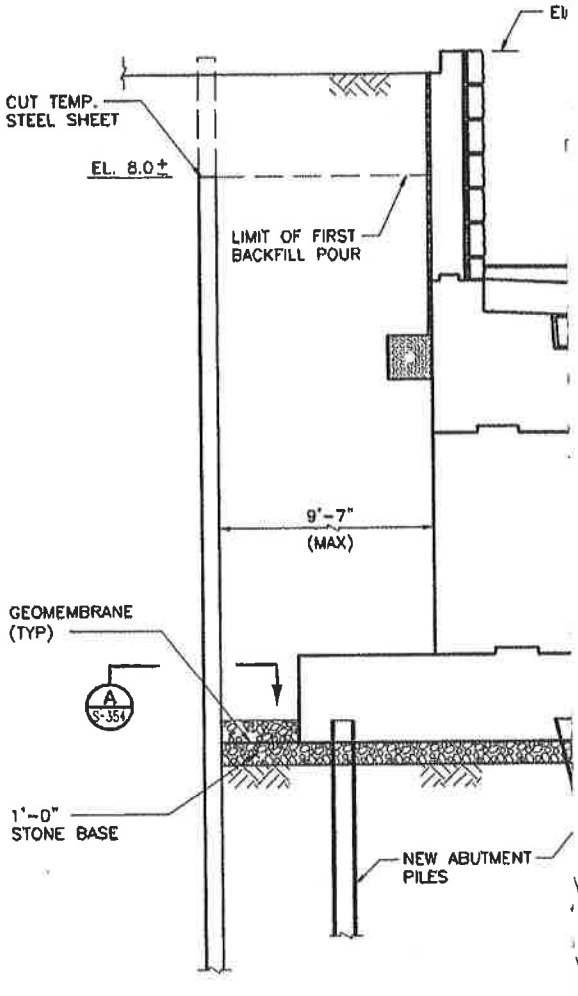

ABUTMENT
SCALE: 1/4

SUGGESTED SEQUENCE OF CONSTRUCTION FOR ABUTMENT AND WINGWALL

1. NEW DOLPHIN TIMBER PILES WILL BE INSTALLED OUTSIDE OF COFFERDAM AREA AND INSTALLED AFTER THE COFFERDAM IS REMOVED. FOR LOCATION OF PILES SEE DWG S-153.
2. CONSTRUCT REMAINDER OF ABUTMENT AND WINGWALL.
3. FOR THE BACKSIDE OF ABUTMENT AND WINGWALLS CONSTRUCTION SEE DWG S-354.
4. FOR THE FRONT OF THE ABUTMENT AND WINGWALL INSTALL A SINGLE LAYER OF GEOMEMBRANE WITH A 1'-0 OVERLAP WHERE ADJACENT FABRICS ARE SET. THE FABRIC SHALL BE GSE, GM 13-60 MIL THICK OR APPROVED EQUAL. A 1'-0" COVER OF ROUNDED RIVER BED STONE OF A MAXIMUM 3" DIAMETER SHALL BE SET ON TOP OF FABRIC TO PROTECT IT FROM ANY SHARP STONE EDGE THAT CAN TEAR THE FABRIC. A 2'-0" OVERLAP OF GEOMEMBRANE SHALL BE BOLTED TO THE PILE CAP AS PER MANUFACTURER'S SPECIFICATIONS. (PRIOR TO ALL FILL PLACEMENT ON THE FRONTSIDE OF THE ABUTMENT AND WINGWALLS THE CONTRACTOR SHALL NOTIFY THE ENGINEER. THE ENGINEER SHALL BE PRESENT DURING THE GEOMEMBRANE INSTALLATION AND FILL PLACEMENT. THE CONTRACTOR SHALL PLACE ALL STONE FILL AND RIP RAP CAREFULLY TO NOT DAMAGE THE GEOMEMBRANE.)
5. REMOVE COFFERDAM. CUT SHEETING IN BACKSIDE OF WALL AND ABUTMENT TO ELEV. 8' . BEFORE REMOVING SHEETING IN FRONT OF WALLS FILL WITH RIP RAP TO MATCH EXISTING STREAM ELEVATION, THEN REMOVE SHEETING AND STEEL PILES IN FRONT OF WALLS AND ABUTMENT.
6. AFTER STEEL SHEETS ARE PULLED CONTRACTOR SHALL ENSURE THAT THE RIP RAP ELEVATION MATCHES THE EXISTING MUDLINE ELEVATION. IF THE ELEVATIONS VARY THE CONTRACTOR SHALL PROVIDE ADDITIONAL RIPRAP TO MATCH THE ELEVATIONS.

FIGURE 4

CITY OF NEW YORK
DEPARTMENT OF TRANSPORTATION
DIVISION OF BRIDGES

CONTRACT NO. **HBQ1162E**

EMERGENCY RECONSTRUCTION OF WEST ABUTMENT AND WINGWALLS OF BORDEN AVENUE BRIDGE OVER DUTCH KILLS

BOROUGH OF QUEENS B.I.N. 2-24041-0

CONSTRUCTION STAGING SECTION 5

1

STV Incorporated
architects/engineers/planners/interior designers
225 Park Avenue South, New York, NY 10003

1/4"=1'-0"

DWG. NO.	SCALE	DATE	SHEET
S-359	AS NOTED	11/20/09	88

11/16/2009\\Projects\0201606\0201606_0001\70_Technical Documents Reports\73_Technical Reports\1605\Borden\Emergency Work\Wr 03-09-09\Other Dwgs\Permit Drawings\S-359.dgn

Figure 5

Backfill Sections (S-354)

FED. RD. REG. NO.	STATE	FEDERAL AID PROJECT NO.	SHEET NO.	TOTAL SHEETS
	NEW YORK			XXX

EMERGENCY RECONSTRUCTION OF WEST ABUTMENT AND WINGWALLS OF BORDEN AVENUE BRIDGE OVER DUTCH KILLS

P.I.N. 84197MB983BR	QUEENS	B.I.N. 2-24041-0

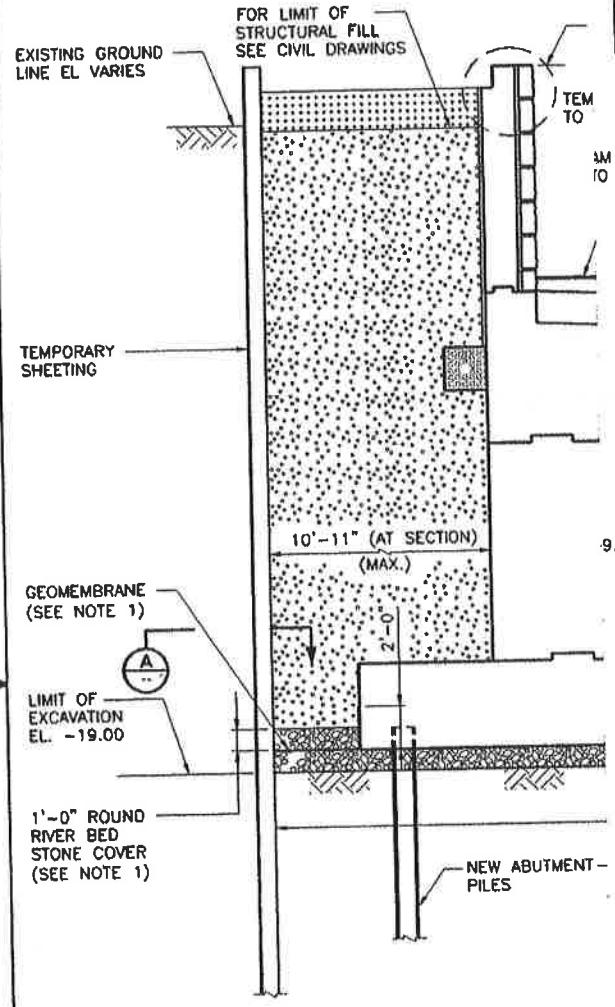

NOTES:

1. FOR BACKSIDE OF THE ABUTMENT AND WINGWALLS INSTALL A SINGLE LAYER OF GEOMEMBRANE WITH A 1'-0" OVERLAP WHERE ADJACENT FABRICS ARE SET. ALL ADJACENT PANELS SHALL BE WELDED AS PER MANUFACTURER'S SPECIFICATIONS. A 2'-0" OVERLAP OF GEOMEMBRANE SHALL BE BOLTED TO THE PILE CAP AS PER MANUFACTURER'S SPECIFICATIONS. THE GEOMEMBRANE SHALL BE CUT TO FIT THE SHAPE OF THE COFFERDAM AS SHOWN ON SECTION A. THE FABRIC SHALL BE GSE, GM 13-60 MIL THICK OR APPROVED EQUAL. A 1'-0" COVER OF ROUNDED RIVER BED STONE OF A MAXIMUM 3" DIAMETER SHAL BE SET ON TOP OF THE FABRIC. (THE ENGINEER SHAL BE PRESENT DURING THE GEOMEMBRANE INSTALLATION AND FILL PLACEMENT. ALL STRUCTURAL FILL SHALL BE COMPACTED AS PER SPECIFICATIONS FOR SELECT STRUCTURAL FILL).
2. FOR LIMIT OF HIGHWAY EMBANKMENT FILL SEE DWG. NO. C-301R.
3. FOR FILL ON FRONT SIDE OF THE ABUTMENT AND WINGWALLS SEE DWG. S-359.

LEGEND

- SELECT STRUCTURAL FILL (ITEM 203.21)
- HIGHWAY EMBANKMENT MATERIAL (HIGHWAY ESTIMATE)

SECTION C
SCALE: 1/4"=1'-0"

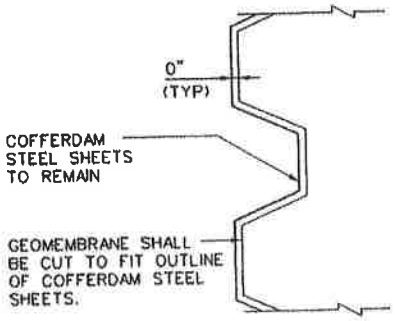

SECTION A
SCALE: 1/2"=1'-0"

FIGURE 5

CITY OF NEW YORK
DEPARTMENT OF TRANSPORTATION
DIVISION OF BRIDGES

CONTRACT NO. **HBQ1162E**

EMERGENCY RECONSTRUCTION OF WEST ABUTMENT AND WINGWALLS OF BORDEN AVENUE BRIDGE OVER DUTCH KILLS

BOROUGH OF QUEENS B.I.N. 2-24041-0

BACKFILL SECTIONS [1]

DWG. NO.	SCALE	DATE	SHEET
S-354	AS NOTED	11/20/09	83

STV Incorporated
architects/engineers/planners/interior designers
225 Park Avenue South, New York, NY 10003

1/4"=1'-0"

11/16/2009k:\Projects\0201606\0201606_0001\70_Technical Documents Reports\73_Technical Reports\1606\Borden\Emergency Work\NY 03-09-09\Other Dwgs\Permit Drawings\S-354.dgn

Table 1

Soil Exceedences for Sediment Waste

Table 1

Soil Exceedences -
Borden Avenue Bridge
Over Dutch Kills
Long Island City, New York 11101

Sample ID			S-1		S-2	
Sampling Date			6/19/2009		6/19/2009	
Matrix			Soil		Soil	
Depth (feet)						
Units			(µg/Kg)		(µg/Kg)	
	NYSDEC Recommended Soil Cleanup Objective (µg/Kg)	NYSDEC (Part 375-6.8) Soil Cleanup Objective** (Track 1) (µg/Kg)				
VOCs						
Acetone	200	50	210	J*	340	*
Methylene Chloride	100	50	100	JB	98	JB
Xylenes, Total	1,200	260	300		90	
SEMIVOLATILE COMPOUNDS						
Benzo[a]anthracene	224 or MDL	1,000	6,200	J	8,900	J
Chrysene	400	1,000	6,900	J	9,200	J
Bis(2-ethylhexyl) phthalate	50,000	NC	130,000		110,000	
Di-n-octyl phthalate	50,000	NC	ND		ND	
Benzo[b]fluoranthene	1,100 or MDL	1,000	5,000	J	5,300	J
Benzo[k]fluoranthene	1,100 or MDL	800	1,900	J	1,800	J
Benzo[a]pyrene	61 or MDL	1,000	6,400	J	7,200	J
Indeno[1,2,3-cd]pyrene	3,200	500	14,000		14,000	
Dibenz(a,h)anthracene	14 or MDL	330	11,000	J	11,000	J
PEST/ HERBICIDES						
4,4'-DDD	2,900	3.3	310		120	
4,4'-DDE	2,100	3.3	130		66	
4,4'-DDT	2,100	3.3	410	*	260	*
Aldrin	41	5	6.4	J	ND	
Dieldrin	44	5	180		74	
Endrin	100	14	270		200	
Heptachlor epoxide	20	NC	27		11	
PCBs						
Aroclor-1242	10,000	100	590		720	
Aroclor-1254	10,000	100	520		1,100	
Aroclor-1260	10,000	100	760		890	

Footnotes:

NYSDEC - New York State Department of Environmental Conservation.

USEPA - United States Environmental Protection Agency.

VOCs - Volatile Organic Compounds.

SVOCs - Semi- Volatile Organic Compounds.

Table 1 (continued)

Soil Exceedences -
Borden Avenue Bridge
Over Dutch Kills
Long Island City, New York 11101

Sample ID Sampling Date Matrix Depth (feet) Units				S-1 6/19/2009 Soil (mg/Kg)		S-2 6/19/2009 Soil (mg/Kg)
	NYSDEC Recommended Soil Cleanup Objective (mg/Kg)	Eastern USA Background (mg/Kg)	NYSDEC (Part 375-6.8) Soil Cleanup Objective** (Track 1) (mg/Kg)			
METALS						
Arsenic	7.5 or SB	3 - 12	13	**45.6**		**34**
Beryllium	0.16 or SB	0.1 - 1.75	7.2	0.7	J	0.8
Cadmium	1 or SB	0.1 - 1.0	2.5	**51.6**		**104**
Chromium	10 or SB	1.5 - 40	NC	342		530
Copper	25 or SB	1 - 50	50	**974**		**1,450**
Lead	SB	200 - 500	63	**607**		**1,370**
Mercury	0.1	0.001 - 0.2	0.18	**2.4**		**2.6**
Nickel	13 or SB	0.5 - 25	30	**392**		**337**
Selenium	2 or SB	0.1 - 3.9	3.9	**8.8**		**5**
Silver	SB	NC	2	**11.2**		**19.5**
Zinc	20 or SB	9 - 50	109	**1,350**		**2,240**

Footnotes:

NYSDEC - New York State Department of Environmental Conservation.

USEPA - United States Environmental Protection Agency.

VOCs - Volatile Organic Compounds.

SVOCs - Semi- Volatile Organic Compounds.

U - The compound was not detected at the indicated concentration.

J - Data indicates the presence of a compound that meets the identification criteria. The result is less than the quantitation limit but greater than zero. The concentration given is an approximate value.

B - The Analyte was found in an associate blank, as well as the sample.

SB - Site Background.

NC - No Criteria.

MDL - Method Detection Limit.

mg/Kg - milligrams per kilogram.

- Indicates an exceedance of NYSDEC's Recommended Soil Cleanup Objective

Table 2

Groundwater Exceedences for Dewatering

Table 2

Groundwater Exceedences -
Borden Avenue Bridge
Over Dutch Kills
Long Island City, New York 11101

Sample ID Sampling Date Matrix Units		W-Tank 6/19/2009 Aqueous (µg/L)		W-Exc 6/19/2009 Aqueous (µg/L)	
	NYSDEC TOGS Standards and Guidance Values (µg/L)				
SEMIVOLATILE COMPOUNDS (GC/MS)					
Benzo[a]anthracene	0.002	8.6	J	0.74	J
Chrysene	0.002	8.3	J	0.66	J
Bis(2-ethylhexyl) phthalate	5	290		17	
Benzo[b]fluoranthene	0.002	4.4	J	0.52	J
Benzo[k]fluoranthene	0.002	1.7	J	ND	
Indeno[1,2,3-cd]pyrene	0.002	4	J	0.92	J
PCBs					
Aroclor-1242	0.09*	1.6		ND	
Aroclor-1254	0.09*	2.3		ND	
Aroclor-1260	0.09*	2.2		ND	
METALS					
Antimony	3	16.2	J	ND	
Arsenic	25	25.8		7.3	J
Cadmium	5	13.1		ND	
Chromium	50	101		18.4	J
Copper	200	290		54.8	
Lead	25	280		47.0	
Nickel	100	126		30.0	

Footnotes (Groundwater):

NYSDEC - New York State Department of Environmental Conservation.
TOGS - Technical and Operational Guidance Series.
VOCs - Volatile Organic Compounds.
SVOCs - Semi- Volatile Organic Compounds.
U - The compound was not detected at the indicated concentration.
J - Data indicates the presence of a compound that meets the identification criteria. The result is less than the quantitation limit but greater than zero. The concentration given is an approximate value.
NC - No Criteria.
ug/L - micrograms per liter.
mg/L - milligrams per liter.
- Indicates an exceedance of TOGs.

Appendix A

Corrective Action Regulatory Approvals

New York State Department of Environmental Conservation
Division of Environmental Remediation, Region 2
Bureau of Spill Prevention and Response
One Hunters Point Plaza
47-40 21st Street, Long Island City, NY 11101-5407
Phone: (718) 482-4995 • **Fax:** (718) 482-4098
Website: www.dec.ny.gov

Alexander B. Grannis
Commissioner

August 31, 2009

George Klein, P.E.
Deputy Chief Engineer
NYC DOT
Bureau of Specialty Engineering and Construction
Division of Bridges
55 Water Street, 5th Floor
New York, NY 10041

Re: Spill #0903437
Borden Avenue Bridge
Borden Avenue and 7th Street
LIC, NY

Dear Mr. Klein:

The Division of Marine Resources and the Bureau of Spill Prevention and Response within the New York State Department of Environmental Conservation (the Department) have reviewed the amended *Corrective Action Plan* (CAP) dated August 19, 2009 and submitted by STV on behalf of the New York City Department of Transportation. Both the Division of Marine Resources and the Bureau of Spill Prevention and Response have approved the CAP. We would also like to inform you that a Stipulation Agreement has been forwarded to your office under separate cover. Please review it and return the signed Stipulation Agreement as soon as possible.

Should you have any questions or wish to discuss the matter, please feel free to contact Jesselynne Krief at (718) 482-3988 or myself at (718) 482-4634.

Sincerely,

Jesselynne Krief
Marine Biologist I

Sincerely,

Raphael Ketani, CPG
Engineering Geologist II

NEW YORK STATE DEPARTMENT OF ENVIRONMENTAL CONSERVATION
Facility DEC ID 2-6304-01440

PERMIT

Under the Environmental Conservation Law (ECL)

Permittee and Facility Information

Permit Issued To:
NYC DEPT OF TRANSPORTATION
40 WORTH ST 11TH FL
NEW YORK, NY 10003
(212) 676-0557

Facility:
NYC DOT - BORDEN AVE BRIDGE
BORDEN AVE BTWN 25TH & 27TH ST
LONG ISLAND CITY, NY 11101

Facility Location: in QUEENS COUNTY **Village:** Long Island City
Facility Principal Reference Point: NYTM-E: 589.262 NYTM-N: 4510.311
Latitude: 41°44'20.1" Longitude: 74°56'34.1"
Project Location: West Bridge Abutment
Authorized Activity: Repair / replace west bridge abutment.

Permit Authorizations

Tidal Wetlands - Under Article 25
Permit ID 2-6304-01440/00004

New Permit	Effective Date: 2/12/2009	Expiration Date: 12/31/2010
Modification # 1	Effective Date: 4/2/2009	Expiration Date: 12/31/2010
Modification # 2	Effective Date: 11/19/2009	Expiration Date: 12/31/2010
Modification # 3	Effective Date: 1/26/2010	Expiration Date: 12/31/2010

Water Quality Certification - Under Section 401 - Clean Water Act
Permit ID 2-6304-01440/00005

New Permit	Effective Date: 2/12/2009	Expiration Date: 12/31/2010
Modification # 1	Effective Date: 4/2/2009	Expiration Date: 12/31/2010
Modification # 2	Effective Date: 11/19/2009	Expiration Date: 12/31/2010
Modification # 3	Effective Date: 1/26/2010	Expiration Date: 12/31/2010

Excavation & Fill in Navigable Waters - Under Article 15, Title 5
Permit ID 2-6304-01440/00006

New Permit	Effective Date: 2/12/2009	Expiration Date: 12/31/2010
Modification # 1	Effective Date: 4/2/2009	Expiration Date: 12/31/2010
Modification # 2	Effective Date: 11/19/2009	Expiration Date: 12/31/2010
Modification # 3	Effective Date: 1/26/2010	Expiration Date: 12/31/2010

NYSDEC Approval

By acceptance of this permit, the permittee agrees that the permit is contingent upon strict compliance with the ECL, all applicable regulations, and all conditions included as part of this permit.

Permit Administrator: JOHN F CRYAN, Regional Permit Administrator

seaward than the existing slope. Within ninety (90) days of permit issuance, the Permittee must submit for review and approval a proposed Mitigation Plan to NYSDEC Bureau of Marine Resources, 47-40 21st Street, Long Island City, New York 11101 (Attention: Jesse Krief). The Mitigation Plan must include a location, a detailed description of the project, and a time schedule for the mitigation project as well as permission from adjacent land owners for all work proposed on adjacent properties not owned by NYCDOT. The Mitigation Plan must be of sufficient detail and substance that it can be accepted by DEC with minimal revision. Within two (2) weeks of receiving comments to the proposed Mitigation Plan, Permittee must submit a revised proposed Mitigation Plan incorporating DEC's comments. Upon approval of the proposed Mitigation Plan Permittee must complete the Mitigation Plan pursuant to the approved schedule or, if no schedule is approved, without delay. Permittee may contact Jesse Krief in the NYSDEC Bureau of Marine Resources at (718) 482-6464 with any questions concerning the Mitigation Plan.

4. **Removal of Temporary Structures** Within sixty (60) days of the completion of the abutment reconstruction activities all temporary structures installed to facilitate the reconstruction must be removed in their entirety. After removal is complete all areas must be restored to original grades using only clean/natural fill and stabilized. Temporary structures to be removed include the sediment staging area, the temporary flume, outfall pipe and baffle, temporary timber pontoon bridge and landings.

5. **HDPE Geomembrane Liner Requirements** Installation of a continuous 60 MIL HDPE geomembrane liner must be installed over all oil contaminated sediment within the cofferdam surrounding the bridge abutment, and on slopes that expose similarly oil contaminated sediment. A one (1) foot minimum cushioning layer must be installed on either side of the liner in order to prevent puncturing. All liner panels must be hot welded together with at least a six (6) inch overlap. All edges of the geomembrane panels adjacent to the bridge abutment must be sealed to the bridge abutment. All liner edges not adjacent to the abutment must be buried in an anchoring trench. Where space is limited and an anchoring trench is not possible liner edges must be left flat and carefully covered with backfill.

6. **Timber Fender Replacement** The replacement of the timber fender system is limited to areas where the fender existed prior to removal of the abutment and must be attached directly to the abutment face as shown on the project plans referenced in Natural Resources Permit Condition 2, specifically sheets 8, 18 and 94R.

7. **Notice of Intent to Commence Work** At least five (5) days prior to commencement of the permitted activity, Permittee must complete and submit the attached "Notice of Intent to Commence Work" to NYSDEC Bureau of Marine Resources, 47-40 21st Street, Long Island City, New York 11101 (Attention: Jesselynne Krief).

8. **Post Permit Sign** The permit sign enclosed with this permit shall be posted in a conspicuous location on the worksite and adequately protected from the weather.

9. **Post Construction Photographs** Within 30 days of the completion of work authorized by this permit, Permittee must provide post-construction photographs of the work area to: NYSDEC Bureau of Marine Resources, 47-40 21st Street, Long Island City, New York 11101 (Attention: Jesse Krief).

10. **Best Management Practices** Best management practices must be employed to prevent the loss of construction materials, debris, and sediment from entering the waterways. Such practices may include, but are not limited to silt fencing, hay bales, floating booms, and oil capture systems. At minimum a floating boom with attached silt curtain must be installed encircling the entire project site for both the

Natural Resource Permit Condition 2. All effluent must be transported to and incorporated into the treatment system.

23. **Storage of Construction Equipment & Materials** The storage of construction equipment and materials must be confined to within the project work site and or upland areas greater than 35 linear feet from the tidal wetland boundary and outside the area of excavation.

24. **Disposal of Excavated Material** All dredged material must be retained so as to not re-enter any water body, tidal wetland, or protected buffer area and be disposed of at an upland site approved to accept petroleum contaminated sediments. Excavated sediments from within the cofferdam area must be placed directly into a conveyance vehicle for transportation to the stockpile area. The sidecasting (double dipping) or temporary storage of excavated material is prohibited.

25. **Prohibited Treated Wood** Use of wood treated with creosote is prohibited. Wood treated with Pentachlorophenol (PCP) must not be used in wetlands or surface waters. Standard pressure treated lumber with CCA and its use is permitted.

26. **Use of wood Preservatives** Pressure treated wood used for construction of in-water structures must have been treated with a preservative and must have undergone a treatment process approved (stamped or otherwise marked as certified) by the American Wood Preservative Association.

Chromated Copper Arsenate (CCA) pressure treated wood must be clean and free of CCA surface deposits. Wood with surface deposits must be washed for at least 5 minutes under running water prior to use. (Note the following condition for the handling of wash water.)

Any wood debris such as sawdust or wash water must not enter any water body, including wetlands, or protected buffer areas. Field application of CCA is strictly prohibited.

27. **Debris Removal** Should any demolition or construction debris fall into the waterway or enter the tidal wetlands, it must be removed immediately.

28. **Debris Disposal** Any debris or excess material from construction of this project will be completely removed from the adjacent area (upland) and removed to an approved upland area for disposal. No debris is permitted in tidal wetlands or tidal wetlands adjacent area or protected buffer areas. All demolition and construction debris must be properly disposed of at a licensed facility.

29. **Clean Fill Material Only** All fill material must consist of "clean" sand, gravel, or soil. The use of material such as asphalt, slag, fly-ash, recycled concrete aggregate (RCA), broken concrete, or demolition debris is strictly prohibited.

30. **Containment of Disturbed Soils** All disturbed areas where soil will be temporarily exposed or stockpiled for longer than one (1) week must be contained by a continuous line of staked hay bales/silt curtain (or other NYSDEC approved method) placed on the seaward side between the fill and wetland or protected buffer area. Tarps are authorized to supplement these approved methods.

31. **No Interference With Navigation** There shall be no unreasonable interference with navigation by the work herein authorized.

32. **Prior Approval of Changes** If the Permittee desires to make any changes in construction techniques, species to be planted, the site plan, any mitigation plan, scheduling or staging of

1. **Facility Inspection by The Department** The permitted site or facility, including relevant records, is subject to inspection at reasonable hours and intervals by an authorized representative of the Department of Environmental Conservation (the Department) to determine whether the permittee is complying with this permit and the ECL. Such representative may order the work suspended pursuant to ECL 71- 0301 and SAPA 401(3).

The permittee shall provide a person to accompany the Department's representative during an inspection to the permit area when requested by the Department.

A copy of this permit, including all referenced maps, drawings and special conditions, must be available for inspection by the Department at all times at the project site or facility. Failure to produce a copy of the permit upon request by a Department representative is a violation of this permit.

2. **Relationship of this Permit to Other Department Orders and Determinations** Unless expressly provided for by the Department, issuance of this permit does not modify, supersede or rescind any order or determination previously issued by the Department or any of the terms, conditions or requirements contained in such order or determination.

3. **Applications For Permit Renewals, Modifications or Transfers** The permittee must submit a separate written application to the Department for permit renewal, modification or transfer of this permit. Such application must include any forms or supplemental information the Department requires. Any renewal, modification or transfer granted by the Department must be in writing. Submission of applications for permit renewal, modification or transfer are to be submitted to:

Regional Permit Administrator
NYSDEC REGION 2 HEADQUARTERS
47-40 21ST ST
LONG ISLAND CITY, NY11101 -5407

4. **Submission of Renewal Application** The permittee must submit a renewal application at least 30 days before permit expiration for the following permit authorizations: Excavation & Fill in Navigable Waters, Tidal Wetlands, Water Quality Certification.

5. **Permit Modifications, Suspensions and Revocations by the Department** The Department reserves the right to modify, suspend or revoke this permit. The grounds for modification, suspension or revocation include:

a. materially false or inaccurate statements in the permit application or supporting papers;

b. failure by the permittee to comply with any terms or conditions of the permit;

c. exceeding the scope of the project as described in the permit application;

d. newly discovered material information or a material change in environmental conditions, relevant technology or applicable law or regulations since the issuance of the existing permit;

e. noncompliance with previously issued permit conditions, orders of the commissioner, any provisions of the Environmental Conservation Law or regulations of the Department related to the permitted activity.

NOTICE OF INTENT TO COMMENCE WORK

Date: _____

NYSDEC Marine Resources
Attn. Jesse Krief
N.Y.S.D.E.C Region 2 Office
47-40 21st Street
Long Island City, N.Y. 11101

Re: NYSDEC Permit No. 2-6304-01440/00004
NYC Dept. Of Transportation
Borden Avenue bridge over Dutch Kills
Borden Avenue between 27th Street & Review Avenue
Queens, New York

Dear Ms. Krief:

In accordance with Natural Resource Condition 7 of the referenced permit, I hereby serve notice to commence work on _____, 200____.

This is also to certify that, having read this entire permit, I am fully aware of and understand the general and special conditions therein, and agree to comply with all such conditions. I further understand that prior to undertaking any modification to the subject work, I must seek and receive written approval of the NYSDEC Regional Permit Administrator.

_____
Signature of Permittee

_____
Name of Permittee (please print)

_____
Signature of Contractor

_____
Name of Contractor (please print)

_____
Street Address of Contractor

_____
City, State, & Zip Code of Contractor

_____
Telephone Number of Contractor

WARNING

The permittee and his contractor (if any) are required to follow all permit conditions. Violations of the permit may lead to legal action, including the imposition of substantial monetary fines and corrective work.

cc: NYSDEC Environmental Permits

Appendix B

Photo Log

Appendix B - Remediation Photographs

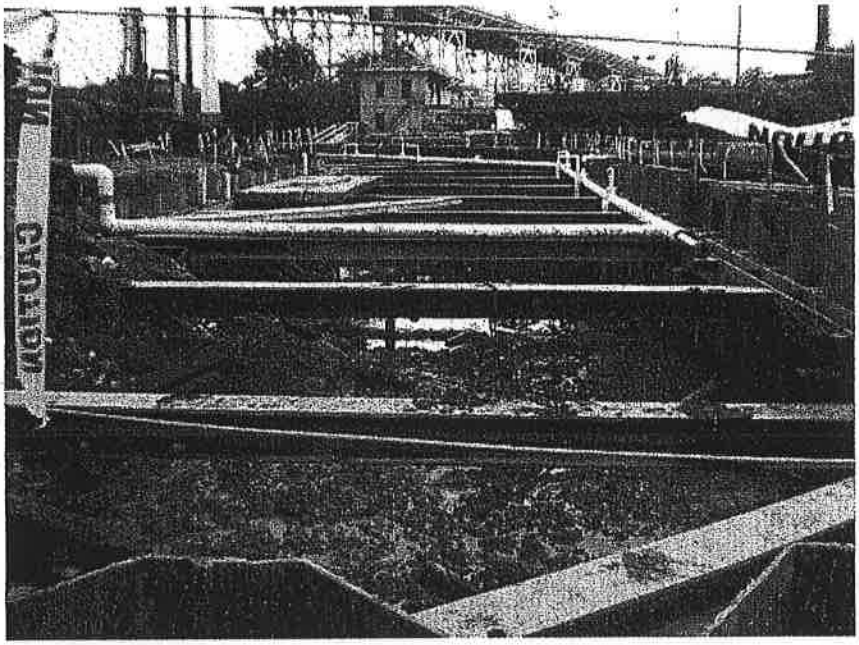

Photograph 1 – Looking east-northeast at sediment within southern side of cofferdam (6/19/10)

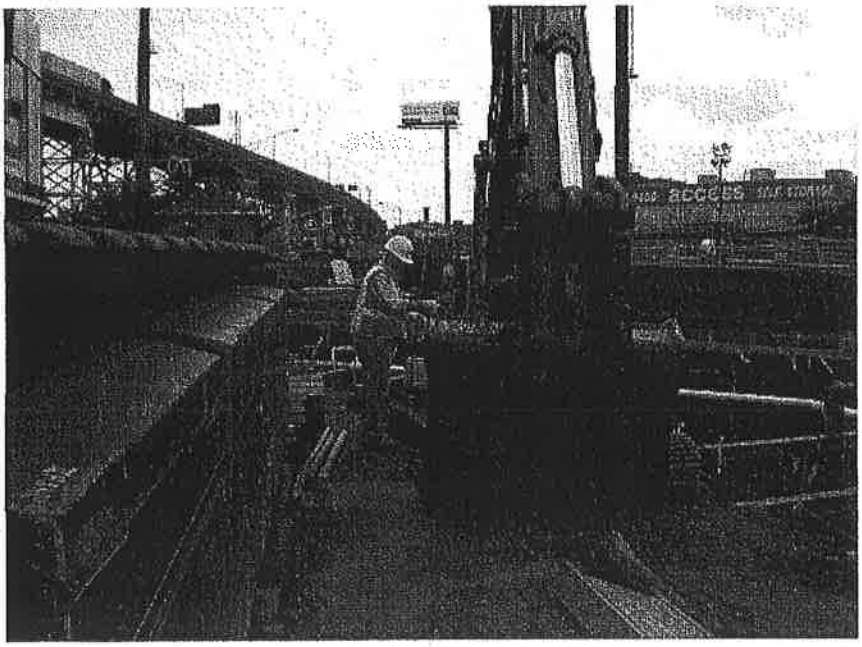

Photograph 2 – EPM collecting sediment sample form excavator bucket (6/19/09)

Appendix B - Remediation Photographs

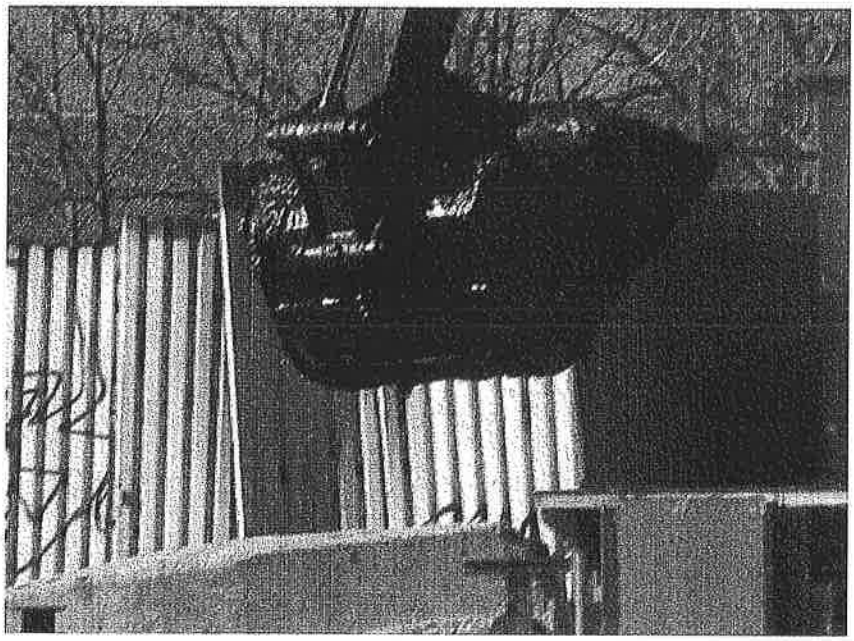

Photograph 5 – Petroleum-contaminated sediment in excavator bucket (01/05/10)

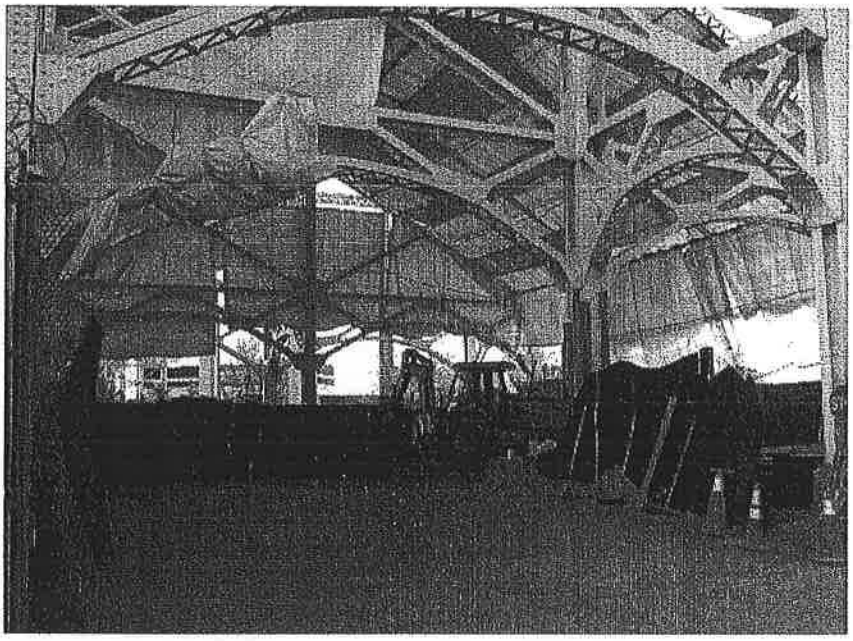

Photograph 6 – Sediment Staging Area. Note concrete slab and tarp cover overhead (01/05/10)

Appendix B - Remediation Photographs

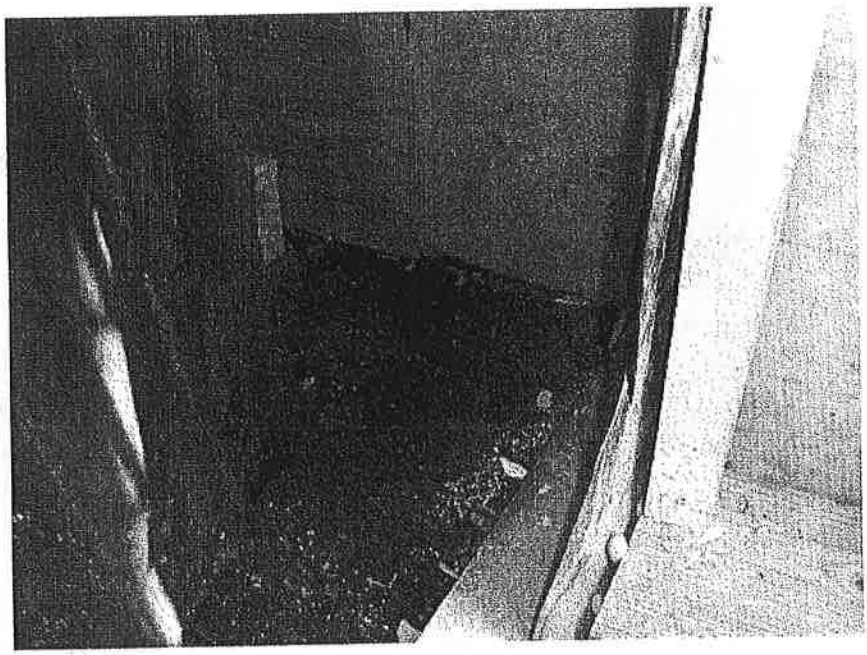

Photograph 9 – Membrane cut to fit around cofferdam sheeting on landward side of the footing (6/22/10)

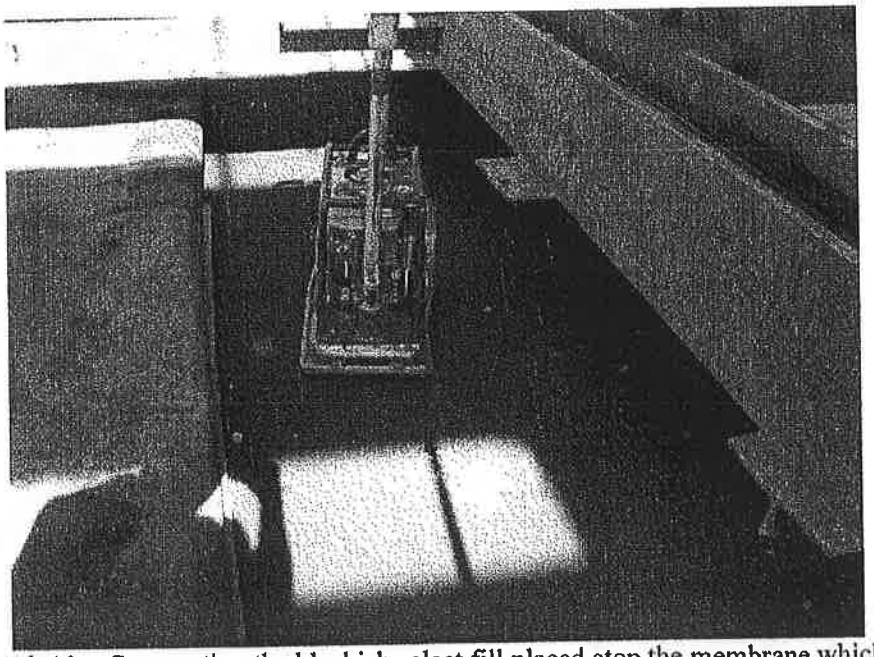

Photograph 10 – Compacting the blackish select fill placed atop the membrane which can be seen to the left coming up the back wall of the footing and over the top (6/22/10)

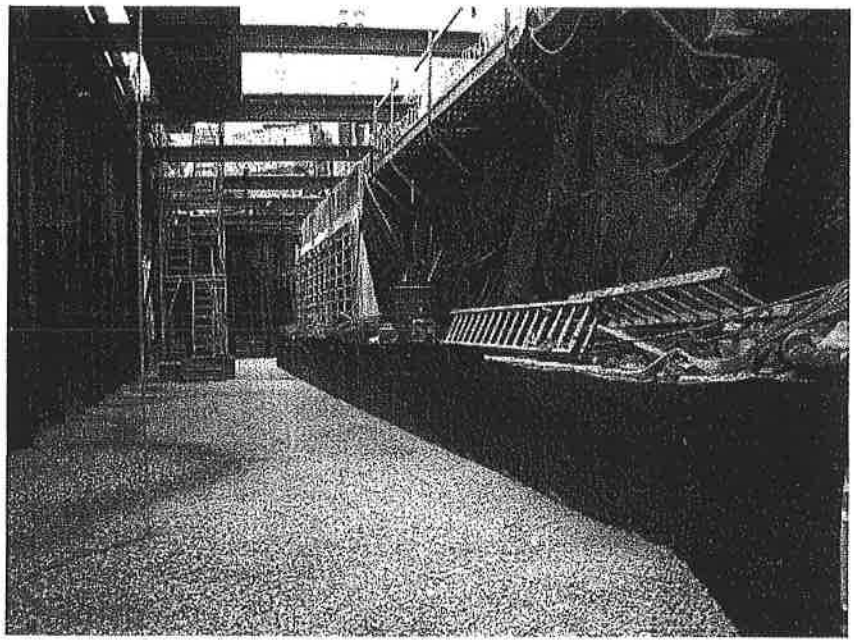

Photograph 13 – River bed stone atop the geomembrane which is seen running up the side of the footing (7/29/10)

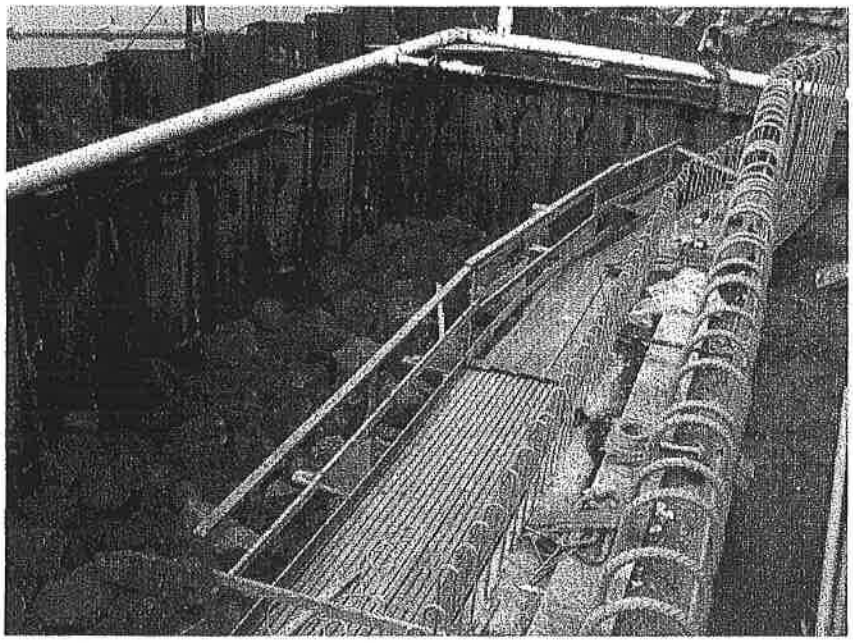

Photograph 14 – Riprap placement on the seaward side of the abutment (8/10/10)

Appendix C

Stipulation Agreement

NEW YORK CITY Department of Transportation
JANETTE SADIK-KHAN, Commissioner

September 3, 2009

BY CERTIFIED MAIL RETURN RECEIPT REQUESTED
AND E-MAIL

John K. Urda, Esq.
New York State Department of Environmental Conservation
Office of General Counsel, Region 2
47-40 21st St.
Long Island City, New York 11101-5401

RE: Borden Avenue Bridge, NYSDEC Spill No. 0903437

Dear Mr. Urda:

Enclosed please find the Stipulation in the above-referenced matter executed by the New York City Department of Transportation.

I would appreciate receiving a copy of the final Stipulation countersigned by the New York State Department of Environmental Conservation.

Sincerely,

Kedari Reddy

Kedari Reddy, Esq.
Director, Office of Environmental Compliance Assessment

NYC Department of Transportation
Division of Legal Affairs
55 Water Street, New York, NY 10041
T: 212.839.6633 F: 212.839.6646
www.nyc.gov/dot

This Stipulation shall terminate when the Department issues a written determination that no further remedial activities are required with respect to the petroleum discharge at the Site (the "Termination Date").

8. The Respondent and its employees, servants, agents, lessees, sublessees, successors, and assigns hereby waive any right to pursue reimbursement of monies expended by the Respondent prior to the Termination Date as against the State of New York or the New York Environmental Protection and Spill Compensation Fund (the "Spill Fund"), and agree to indemnify and hold harmless the Spill Fund from any and all legal or equitable claims, suits, causes of action, or demands whatsoever with respect to the Site that any of same has or may have as a result of the Respondent's entering into or fulfilling the terms of this Stipulation with respect to the Site.

NEW YORK CITY DEPARTMENT
OF TRANSPORTATION

9/3/09
Date

BY: _____

Henry Pereira, Deputy Comm.
Print name and title

_____
Date

_____
Regional Director, NYSDEC Region 2

TABLE 2
Wastewater Limits For Surface Water Discharges

COMPOUND	GASOLINE	FUEL OIL
pH range	6.5 - 8.5	6.5 - 8.5
Benzene[1]	7 ug/l	7 ug/l
Ethylbenzene	5 ug/l	5 ug/l
Toluene	5 ug/l	5 ug/l
o-Xylene	5 ug/l	5 ug/l
m-Xylene	5 ug/l	5 ug/l
p-Xylene	5 ug/l	5 ug/l
Mixed xylenes	5 ug/l	5 ug/l
Naphthalene	10 ug/l	10 ug/l
MTBE	10 ug/l	10 ug/l

N A = not applicable

[1] The benzene limits for discharge to Class A surface waters are applicable for water bodies capable of 7:1 dilution ratio of base flow to discharge flow. The Division of Water may be consulted for assistance as needed

Appendix D

Treatment System Schematic Diagram

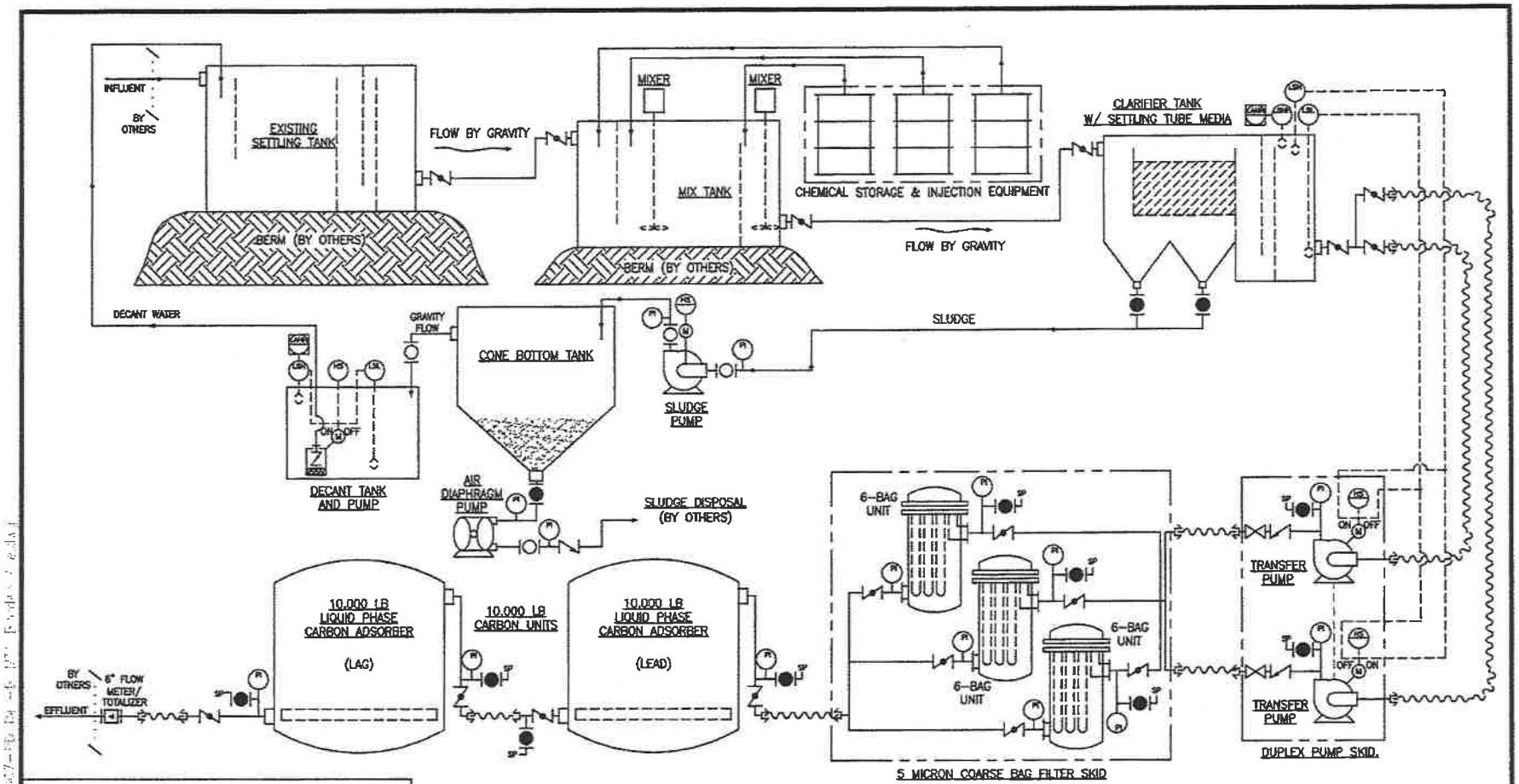

LEGEND

- PROCESS PIPING
- FLEXIBLE HOSE
- FLOW DIRECTION
- PIPE CROSS OVER
- LEVEL FLOAT
- MOTOR
- FLOW METER
- BALL VALVE (NORMALLY CLOSE)
- BUTTERFLY VALVE
- CHECK VALVE
- GATE VALVE (OPEN)
- SP SAMPLE PORT
- CAM LOCK COUPLING
- PRESSURE GAGE
- LEVEL ALARM HIGH HIGH
- LEVEL SWITCH HIGH
- LEVEL SWITCH HIGH HIGH
- LEVEL SWITCH LOW
- HAND OPERATED SWITCH

Appendix D - Treatment System Schematic

THIS DRAWING IS THE PROPERTY OF GROUND/WATER TREATMENT & TECHNOLOGY, INC.

NOTES:
1) MAXIMUM FLOWRATE = 600 GPM
2) SYSTEM FOOTPRINT APPROX. 10' X 100' + 20' X 50'
3) NOT ALL VALVES, INSTRUMENTATION AND PIPING, ETC. SHOWN FOR CLARITY.
4) GENERATOR BY GWTT. - 460V, 3 PHASE, 100 AMPS.

NO.	REVISIONS	DATE
B	PRELIMINARY DESIGN FOR REVIEW	07/02/09

MTA BORDEN AVE
BROOKLYN, NY

600 GPM PROPOSED TEMPORARY WATER TREATMENT SYSTEM

SCALE:	NTS	APPROVED BY:	JB	DRAWN BY:	AAV
DATE:	06/30/09				

GROUND/WATER TREATMENT & TECHNOLOGY
P.O. BOX 1174
DENVILLE, NJ 07834

DWG SIZE:	A	SHEET:	1 OF 1	DRAWING NUMBER:	14-1607-PD	B

Appendix E

Sediment and Sludge Waste Disposal Manifests and Truck Weigh Tickets

Appendix F

Summary Table of Waste Shipments

APPENDIX D
WASTE SHIPMENT SUMMARY
BORDEN AVENUE BRIDGE SITE

Month/Year	Date	Clean Earth Manifest No.	Weigh Ticket No.	Weight in Tons
December-09	12/16/09	378151	307000095407	29.48
		378152	307000095424	30.82
		378157	307000095477	27.09
		378158	307000095472	35.80
		378159	307000095342	25.74
		378160	307000095327	26.42
	12/17/09	378161	307000095569	28.02
		378162	307000095520	28.73
		378164	307000095720	28.07
		378165	307000095713	31.33
		378166	307000095684	29.97
		378167	307000095645	30.18
		378168	307000095629	29.81
		378169	307000095519	27.54
		378170	307000095646	31.89
		378171	307000095721	26.49
		378172	307000095512	30.89
	12/18/09	378153	307000095738	30.14
		378154	307000095816	28.97
		378155	307000095801	29.86
		378156	307000095798	29.53
		378163	307000095819	32.22
		378244	307000095860	29.03
		378245	307000095863	30.98
		378255	307000095854	30.44
		378256	307000095839	30.55
	12/21/09	378246	307000095908	27.88
		378247	307000095909	27.34
		378248	307000095931	27.91
		378249	307000095933	29.29
		378251	307000095929	27.64
		378252	307000095926	24.66
		378253	307000095916	27.24
		378254	307000095903	26.32
		378257	307000095895	25.95
		378258	307000095899	24.05
		277633	307000095882	29.66
		277634	307000095883	27.99
		277637	307000095878	26.03
		277646	307000095877	30.57
		277652	307000095875	30.01
	12/22/09	378250	307000095959	31.94
		378324	307000095964	21.41
		378325	307000095965	20.65
		378326	307000095972	17.84
		378429	307000096193	30.88
	12/23/09	378338	307000096172	24.93
		378339	307000096136	27.29
	12/29/09	378424	307000096485	25.88
		378327	307000096584	27.56
		378328	307000096642	26.46
	12/30/09	378335	307000096719	31.77
		378337	307000096729	27.82
		378467	307000096724	26.02
		378468	307000096814	30.69
		378469	307000096876	33.59
		378470	307000096902	32.22
		378471	307000096903	29.36
		378475	307000096825	25.99
		378476	307000096780	31.77
	1/4/10	378472	307000096953	25.84
		378473	307000096955	28.87
		378474	307000096956	28.88
		378425	307000097037	31.46
		378426	307000097000	28.84
		378427	307000097005	28.75
		378428	307000097001	28.66
		378333	307000097048	29.71
		378334	307000097045	31.15
	1/5/10	378580	307000097256	30.78
		378581	307000097267	29.68
		378582	307000097265	31.19
		378583	308000097322	30.19
		378584	307000097326	29.88
		378585	307000097327	27.87
		378587	307000097170	28.59
		378588	307000097181	28.16
		378589	307000097177	31.41
	1/6/10	369530	307000097387	35.67
		369531	307000097390	30.64
		369637	307000097476	34.25
		369638	307000097477	32.25
		369639	307000097538	31.86
		369640	307000097531	35.88

APPENDIX D
WASTE SHIPMENT SUMMARY
BORDEN AVENUE BRIDGE SITE

Month/Year	Date	Clean Earth Manifest No.	Weigh Ticket No.	Weight in Tons
February-10	2/19/10	377328	307000104441	28.52
		377329	307000104523	29.82
		377330	307000104567	30.17
Mar-10	3/29/10	277649	307000109108	29.63
		277650	307000109143	32.86
		277651	307000109060	28.56
		277654	307000109100	25.92
		238925	307000109149	30.73
Apr-10	4/5/10	293556	307000109745	29.06
		370767	307000109746	29.23
		402767	307000109832	29.30
		402766	307000109840	30.68
		402763	307000109907	27.65
		402764	307000109915	28.40
		402765	307000109922	28.65
	4/6/10	370761	307000110226	33.96
		402758	307000110213	36.07
		402759	307000110118	35.47
		402760	307000110014	28.79
		402761	307000110015	27.20
		402762	307000110130	30.54
	4/7/10	370762	307000110327	28.65
		370764	307000110448	28.50
		404148	307000110571	34.15
	4/8/10	402911	307000110766	29.81
		402912	307000110706	27.74
		402913	307000110642	28.28
	4/9/10	370763	307000110819	24.66
		402828	307000110882	30.18
		402829	307000110849	30.74
		403079	307000110847	26.74
		403080	307000110874	28.33
	4/12/10	402827	307000111078	29.66
		404149	307000110946	28.02
		404150	307000110947	27.42
		404632	307000111022	28.97
		404633	307000111023	30.62
		404634	307000111079	31.90
	4/13/10	404151	307000111165	31.14
		404152	307000111260	31.97
		404176	307000111331	33.89
	4/14/10	404781	307000111552	30.32
		404782	307000111560	31.01
		404783	307000111418	27.63
		404784	307000111421	27.96
		404785	307000111508	30.40
		404786	307000111497	28.94
	4/15/10	402801	307000111627	31.82
		402802	307000111710	30.10
		402806	307000111752	30.52
	4/16/10	402803	307000111907	34.72
		402804	307000111817	32.52
		402805	307000111872	35.05
	4/19/10	404930	307000112080	29.93
		404931	307000111981	28.78
		404929	307000112038	28.67
	4/21/10	404791	307000112351	30.20
		405052	307000112485	30.14
		405053	307000112553	32.95
	4/22/10	404178	307000112743	29.31
		404787	307000112833	29.59
		404788	307000112655	30.50
		404789	307000112754	32.71
		404790	307000112837	30.33
	4/23/10	404179	307000113016	29.30
		404180	307000112921	28.06
		405137	307000223060	27.96
	4/26/10	404172	307000113154	27.32
		404173	307000113197	27.44
		404174	307000113206	28.50
		405176	307000113397	33.56
	4/27/10	405177	307000113451	33.76
	4/28/10	404156	307000113556	20.02
		404157	307000113507	20.38
		404175	307000113597	9.35
August-10	8/12/10	424151	307000130762	10.93
	8/13/10	424148	307000131104	21.60
	8/16/10	424147	307000131362	6.45
	8/19/10	424150	307000132249	19.16
	8/25/10	424146	307000133215	16.24
	8/26/10	424145	307000133345	16.03
			Total Weight (tons)	7390.75

Kurre, John

From: Donald P. Hessemer <Donald.Hessemer@stvinc.com>
Sent: Thursday, April 07, 2011 4:08 PM
To: Kurre, John; Duran, Beatriz; Lotfi, Reza; Reddy, Kedari
Cc: Alan P. Marchan; Miguel A. Rodriguez; Haks,Jerry Liebowitz; harold palmer; Paul@maracapconstruction.com
Subject: Borden Ave Spill Case Closed
Attachments: Spill Case Closure 3-3-11 NYSDEC Spills Database.pdf

As mentioned in Tuesday's Project Progress meeting, after review of the Spill Closure Report, DEC closed out the Spill Case for Borden Avenue on March 3, 2011. Case Manager, Raphael Ketani informed me that "No Further action" letters are no longer issued for spills.

I have attached the DEC spills database printout as documentation for your files.

If you have any questions or comments, please contact me.

Don Hessemer, CHMM
Senior Project Manager
STV Incorporated
225 Park Avenue South
New York, NY 10003
(212) 614-3412 Direct Dial
(646) 654-1861 Fax
www.stvinc.com

Please consider the environment before printing this e-mail.

Visit us at our website: http://www.stvinc.com

The information contained in this electronic message is intended only for the use of the individual or entity to which it is addressed and may contain information that is privileged, confidential and exempt from disclosure under applicable law. If the reader of this message is not the intended recipient, you are informed that any dissemination, copying or disclosure of the material contained herein, in whole or in part, is strictly prohibited. If you have received this transmission in error, please notify STV and purge this message.

NEW YORK STATE
DEPARTMENT OF
ENVIRONMENTAL CONSERVATION

Spill Incidents Database Search Details

Spill Record

Administrative Information

DEC Region: 2
Spill Number: 0903437

Spill Date/Time

Spill Date: 06/23/2009 **Spill Time:** 01:25:00 PM
Call Received Date: 06/23/2009 **Call Received Time:** 01:25:00 PM

Location

Spill Name: NYC DOT BORDEN AVENUE BRIDGE
Address: BORDEN AVE & 7TH ST
City: LONG ISLAND CITY **County:** Queens

Spill Description

Material Spilled	Amount Spilled	Resource Affected
#6 Fuel Oil	UNKNOWN	Soil , Groundwater , Surface Water

Cause: Other
Source: Commercial/Industrial
Waterbody: DUTCH KILLS

Record Close

Date Spill Closed: 03/03/2011

"Date Spill Closed" means the date the spill case was closed by the case manager in the Department of Environmental Conservation (the Department). The spill case was closed because either; a) the records and data submitted indicate that the necessary cleanup and removal actions have been completed and no further remedial activities are necessary, or b) the case was closed for administrative reasons (e.g., multiple reports of a single spill consolidated into a single spill number). The Department however reserves the right to require additional remedial work in relation to the spill, if in the future it determines that further action is necessary.

If you have questions about this reported incident, please contact the Regional Office where the incident occurred.

Refine Current Search

New York State Department of Environmental Conservation
Division of Environmental Permits, Region 2
47-40 21ST Street, Long Island City, NY 11101-5407
Phone: (718) 482-4997 • **FAX:** (718) 482-4975
Website: www.dec.state.ny.us

Alexander B. Grannis
Commissioner

February 12, 2009

Michael V. Tumulty
STV Incorporated
225 Park Avenue South
New York, NY 10003

Re: NYSDEC Permit No. 2-6304-01440/00004
NYC Dept. Of Transportation
Borden Avenue Bridge over Dutch Kills
Borden Avenue between 27th Street & Review Avenue
Queens, New York
6NYCRR Part 608 - Water Quality Certification
NYCRR Part 661 - Tidal Wetlands
ECL Article 15 - Protection of Waters
NOTICE OF PERMIT ISSUANCE

Dear Mr. Tumulty:

Enclosed is your permit. Please read it carefully. Compliance with all permit conditions is required.

Please note that:

a. Natural Resource Permit Condition 3 requires submission of a mitigation plan within 90 days of permit issuance.

b. Natural Resource Permit Condition 4 requires identification of construction option within 1 week of bridge inspection.

c. Natural Resource Permit Condition 5 requires submission of the attached Notice of Intent to Commence Work at least 5 days prior to beginning work authorized by the permit.

Technical questions concerning the permit should be directed to Jesselynne Krief in the NYSDEC Bureau of Marine Resources at 718 482-6464. Administrative questions should be directed to Tammy Greco in the NYSDEC Division of Environmental Permits at 718 482-4997.

Sincerely,

Harold J. Dickey
Deputy Regional Permit Administrator

cc: NYC Dept. Of Transportation
NYSDEC Marine Resources
NYSDEC Law Enforcement

NEW YORK STATE DEPARTMENT OF ENVIRONMENTAL CONSERVATION
Facility DEC ID 2-6304-01440

PERMIT

Under the Environmental Conservation Law (ECL)

Permittee and Facility Information

Permit Issued To:
NYC DEPT OF TRANSPORTATION
40 WORTH ST 11TH FL
NEW YORK, NY 10003
(212) 676-0557

Facility:
NYC DOT - BORDEN AVE BRIDGE
BORDEN AVE BTWN 25TH & 27TH ST
LONG ISLAND CITY, NY 11101

Facility Location: in QUEENS COUNTY **Village:** Long Island City
Facility Principal Reference Point: NYTM-E: 589.262 NYTM-N: 4510.311
Latitude: 41°44'20.1" Longitude: 74°56'34.1"
Project Location: South of Long Island Expressway between 27th Street & Review Avenue
Authorized Activity: Repair/replacement west bridge abutment.

Permit Authorizations

Tidal Wetlands - Under Article 25
Permit ID 2-6304-01440/00004
New Permit Effective Date: 2/12/2009 Expiration Date: 12/31/2010
Water Quality Certification - Under Section 401 - Clean Water Act
Permit ID 2-6304-01440/00005
New Permit Effective Date: 2/12/2009 Expiration Date: 12/31/2010
Excavation & Fill in Navigable Waters - Under Article 15, Title 5
Permit ID 2-6304-01440/00006
New Permit Effective Date: 2/12/2009 Expiration Date: 12/31/2010

NYSDEC Approval

By acceptance of this permit, the permittee agrees that the permit is contingent upon strict compliance with the ECL, all applicable regulations, and all conditions included as part of this permit.

Permit Administrator: JOHN F CRYAN, Regional Permit Administrator
Address: NYSDEC REGION 2 HEADQUARTERS
47-40 21ST ST
LONG ISLAND CITY, NY 11101 -5407

Authorized Signature: John F. Cryan Date 02/12/09

Permit Components

NEW YORK STATE DEPARTMENT OF ENVIRONMENTAL CONSERVATION
Facility DEC ID 2-6304-01440

NATURAL RESOURCE PERMIT CONDITIONS

WATER QUALITY CERTIFICATION SPECIFIC CONDITION

GENERAL CONDITIONS, APPLY TO ALL AUTHORIZED PERMITS

NOTIFICATION OF OTHER PERMITTEE OBLIGATIONS

NATURAL RESOURCE PERMIT CONDITIONS - Apply to the Following Permits: TIDAL WETLANDS; WATER QUALITY CERTIFICATION; EXCAVATION & FILL IN NAVIGABLE WATERS

1. **Conformance With Plans** All activities authorized by this permit must be in strict conformance with the approved plans submitted by the applicant or applicant's agent as part of the permit application. Such approved plans were prepared by Ground/Water Treatment and Technology entitled: ¿50 Yard Roll-Off Settling Tank Standard Equipment Specification¿, Sheet 1 of 1, dated October 6, 2008, rec¿d by NYSDEC on February 5, 2009..

2. **Conformance with Plans - Addenda** In addition to plans referenced in the Condition titled "Conformance with Plans," the activities authorized by this permit must be in strict conformance with the following approved plans and/or submissions made as part of the permit application:

If Option 1 (Repair) is employed:

Plans prepared by STV Incorporated for the City of New York Department of Transportation Division of Bridges contract no. HBQ1162E entitled:

a) "Emergency Reconstruction of West Abutment and Wingwalls of Borden Avenue Bridge over Dutch Kills", SHEETS 8, 9, 38, 42R, 43, 44, 45, and 46 dated January 16, 2009, received by NYS DEC on February 5, 2009.

b) "Emergency Reconstruction of West Abutment and Wingwalls of Borden Avenue Bridge over Dutch Kills", SHEET 39, dated January 29, 2009, received by NYS DEC on February 5, 2009.

c) "Emergency Reconstruction of West Abutment and Wingwalls of Borden Avenue Bridge over Dutch Kills", SHEET 61, dated January 16, 2009, received by NYS DEC on January 26, 2009.

If Option 2 (Replacement) is employed:

a) "Emergency Reconstruction of West Abutment and Wingwalls of Borden Avenue Bridge over Dutch Kills", SHEETS 8, 67, 78, 82, 83, and 88 dated January 16, 2009, received by NYS DEC on February 5, 2009.

b) "Emergency Reconstruction of West Abutment and Wingwalls of Borden Avenue Bridge over Dutch Kills", SHEET 71, dated January 29, 2009, received by NYS DEC on February 5, 2009.

c) "Emergency Reconstruction of West Abutment and Wingwalls of Borden Avenue Bridge over Dutch Kills", SHEETS 72 an 75, dated January 16, 2009, received by NYS DEC on February 6, 2009.

3. **Mitigation Plan** Within ninety (90) days of permit issuance, Permittee must submit for review and approval a proposed Mitigation Plan Permittee that allows for the removal of approximately 50 cubic yards of debris from the Dutch Kills shoreline to: NYSDEC Bureau of Marine Resources, 47-40 21st Street, Long Island City, New York 11101 (Attention: Jesselynne Krief).

The Mitigation Plan must include a location, a detailed description of the project, and a time schedule for the mitigation project. The Mitigation Plan must be of sufficient detail and substance that it can be accepted by NYSDEC with minimal revision. Within two (2) weeks of receiving comments to the proposed Mitigation Plan, Permittee must submit a revised proposed Mitigation Plan incorporating DEC's comments: Upon approval of the proposed Mitigation Plan Permittee must complete the Mitigation Plan pursuant to the approved schedule or, if no schedule is approved, without delay. Please contact Jesselynne Krief in the NYSDEC Bureau of Marine Resources at (718) 482-6464 if you have any questions concerning the Mitigation Plan.

4. **Notification of Construction Option** Within (1) one week of the completion of the inspection of the bridge abutment timber pile support structure, Permittee must provide an inspection report and written notification indicating which of the two approved construction methods (replacement or repair) will be employed to: NYSDEC Bureau of Marine Resources, 47-40 21st Street, Long Island City, New York 11101 (Attention: Jesselynne Krief).

5. **Notice of Intent to Commence Work** At least five (5) days prior to commencement of the permitted activity, Permittee must complete and submit the attached "Notice of Intent to Commence Work" to NYSDEC Bureau of Marine Resources, 47-40 21st Street, Long Island City, New York 11101 (Attention: Jesselynne Krief).

6. **Post Construction Photographs** Post-construction photographs of the work area must be submitted to the NYSDEC Bureau of Marine Resources, 47-40 21st Street, Long Island City, New York 11101 (Attention: Jesselynne Krief) within 30 days of the completion of work.

7. **Post Permit Sign** The permit sign enclosed with this permit shall be posted in a conspicuous location on the worksite and adequately protected from the weather.

8. **Best Management Practices** Best management practices must be employed to prevent the loss of construction materials, debris, and sediment from entering the waterways. Such practices may include, but are not limited to silt fencing, hay bales, and floating booms. At minimum a floating boom with attached silt curtain must be installed encircling the entire project site for both the preliminary inspection of the relieving platform and for the duration of the project.

9. **Precautions Against Contamination of Waters** All necessary precautions shall be taken to preclude contamination of any wetland or waterway by suspended solids, sediments, fuels, solvents, lubricants, epoxy coatings, paints, concrete, leachate or any other environmentally deleterious materials associated with the project.

10. **Discharges to Tidal Wetlands Prohibited** There must be no discharge of runoff or other effluent over or through any abutment wall or shoreline stabilization structure or into any tidal wetland or tidal wetlands adjacent area unless specifically authorized by this permit.

11. **Concrete / Leachate Discharges Prohibited** During construction, concrete or leachate must not escape or be discharged, nor will washings from transit mix trucks, mixers, or other devices enter tidal wetlands and or protected buffer areas.

12. **Excavate Backfill Prior to Removal of Abutment** Prior to any construction or removal of the abutment and other shoreline stabilization structures all backfill must be excavated landward of the abutment and retained so as not to enter the waterway, tidal wetland or protected buffer area.

13. **Construct Abutment Prior to Fill Placement** Reconstruction or repair of the west abutment wall must be completed prior to placement of any fill material behind this structure.

14. **Install Cofferdam & Sheeting Protection Prior to Excavation** All cofferdams and protective sheeting functioning as the seaward project boundaries must be installed prior to excavation and removal of existing structures and fill immediately landward of such structures.

15. **Weep Holes Prohibited** The construction of weep holes in the abutment wall is strictly prohibited.

16. **Equipment Operation Below High Water Pohibited** Equipment operation below apparent high water is strictly prohibited.

17. **Storage of Construction Equipment and Materials** The storage of construction equipment and materials must be confined to within the project work site and or upland areas greater than 35 linear feet from the tidal wetland boundary.

18. **Disposal of Excavated Material** All dredged /excavated material must be disposed on an approved upland site and be retained so as to not re-enter any water body, tidal wetland, or protected buffer area. Excavated sediments will be placed directly into the approved disposal site or conveyance vehicle. The sidecasting (double dipping) or temporary storage of excavated material is prohibited.

19. **Debris Removal** Should any demolition or construction debris fall into the waterway or enter the tidal wetlands, it must be removed immediately.

20. **Debris Disposal** All demolition and construction debris must be properly disposed of at a licensed facility.

21. **Removal of Debris and Excess Material** Any debris or excess material from construction of this project will be completely removed from the adjacent area (upland) and removed to an approved upland area for disposal. No debris is permitted in tidal wetlands or tidal wetlands adjacent area or protected buffer areas.

22. **Clean Fill Material Only** All fill material must consist of "clean" sand, gravel, or soil. The use of material such as asphalt, slag, fly-ash, recycled concrete aggregate (RCA), broken concrete, or demolition debris is strictly prohibited.

23. **Containment of Disturbed Soils** All disturbed areas where soil will be temporarily exposed or stockpiled for longer than one (1) week will be contained by a continuous line of staked hay bales/silt curtain (or other NYSDEC approved method) placed on the seaward side between the fill and wetland or protected buffer area. Tarps are authorized to supplement these approved methods.

24. **No Interference With Navigation** There shall be no unreasonable interference with navigation by the work herein authorized.

25. **Minimize Adverse Impacts to Wetlands, Wildlife, Water** All work must be performed in a manner which minimizes adverse impacts to wetlands, wildlife, water quality and natural resources.

26. **Prior Approval of Changes** If the Permittee desires to make any changes in construction

techniques, species to be planted, the site plan, any mitigation plan, scheduling or staging of construction, or any other aspect of this project, the Permittee shall submit a written request to the Regional Permit Administrator to make such proposed changes and shall not make such changes unless authorized in writing by the Department.

27. **Failure to Meet Permit Conditions** Failure of the permittee to meet all the conditions of this permit is a violation of this permit and grounds for an order to immediately cease the permitted activity at the project site.

28. **State May Require Site Restoration** If upon the expiration or revocation of this permit, the project hereby authorized has not been completed, the applicant shall, without expense to the State, and to such extent and in such time and manner as the Department of Environmental Conservation may require, remove all or any portion of the uncompleted structure or fill and restore the site to its former condition. No claim shall be made against the State of New York on account of any such removal or alteration.

29. **State May Order Removal or Alteration of Work** If future operations by the State of New York require an alteration in the position of the structure or work herein authorized, or if, in the opinion of the Department of Environmental Conservation it shall cause unreasonable obstruction to the free navigation of said waters or flood flows or endanger the health, safety or welfare of the people of the State, or cause loss or destruction of the natural resources of the State, the owner may be ordered by the Department to remove or alter the structural work, obstructions, or hazards caused thereby without expense to the State, and if, upon the expiration or revocation of this permit, the structure, fill, excavation, or other modification of the watercourse hereby authorized shall not be completed, the owners, shall, without expense to the State, and to such extent and in such time and manner as the Department of Environmental Conservation may require, remove all or any portion of the uncompleted structure or fill and restore to its former condition the navigable and flood capacity of the watercourse. No claim shall be made against the State of New York on account of any such removal or alteration.

30. **State Not Liable for Damage** The State of New York shall in no case be liable for any damage or injury to the structure or work herein authorized which may be caused by or result from future operations undertaken by the State for the conservation or improvement of navigation, or for other purposes, and no claim or right to compensation shall accrue from any such damage.

WATER QUALITY CERTIFICATION SPECIFIC CONDITIONS

1. **Water Quality Certification** The NYS Department of Environmental Conservation hereby certifies that the subject project will not contravene effluent limitations or other limitations or standards under Sections 301, 302, 303, 306 and 307 of the Clean Water Act of 1977 (PL 95-217) provided that all of the conditions listed herein are met.

GENERAL CONDITIONS - Apply to ALL Authorized Permits:

1. **Facility Inspection by The Department** The permitted site or facility, including relevant records, is subject to inspection at reasonable hours and intervals by an authorized representative of the Department of Environmental Conservation (the Department) to determine whether the permittee is complying with this permit and the ECL. Such representative may order the work suspended pursuant to ECL 71- 0301

and SAPA 401(3).

The permittee shall provide a person to accompany the Department's representative during an inspection to the permit area when requested by the Department.

A copy of this permit, including all referenced maps, drawings and special conditions, must be available for inspection by the Department at all times at the project site or facility. Failure to produce a copy of the permit upon request by a Department representative is a violation of this permit.

2. **Relationship of this Permit to Other Department Orders and Determinations** Unless expressly provided for by the Department, issuance of this permit does not modify, supersede or rescind any order or determination previously issued by the Department or any of the terms, conditions or requirements contained in such order or determination.

3. **Applications For Permit Renewals, Modifications or Transfers** The permittee must submit a separate written application to the Department for permit renewal, modification or transfer of this permit. Such application must include any forms or supplemental information the Department requires. Any renewal, modification or transfer granted by the Department must be in writing. Submission of applications for permit renewal, modification or transfer are to be submitted to:

Regional Permit Administrator
NYSDEC REGION 2 HEADQUARTERS
47-40 21ST ST
LONG ISLAND CITY, NY11101 -5407

4. **Submission of Renewal Application** The permittee must submit a renewal application at least 30 days before permit expiration for the following permit authorizations: Tidal Wetlands, Water Quality Certification, Excavation & Fill in Navigable Waters.

5. **Permit Modifications, Suspensions and Revocations by the Department** The Department reserves the right to modify, suspend or revoke this permit. The grounds for modification, suspension or revocation include:

a. materially false or inaccurate statements in the permit application or supporting papers;

b. failure by the permittee to comply with any terms or conditions of the permit;

c. exceeding the scope of the project as described in the permit application;

d. newly discovered material information or a material change in environmental conditions, relevant technology or applicable law or regulations since the issuance of the existing permit;

e. noncompliance with previously issued permit conditions, orders of the commissioner, any provisions of the Environmental Conservation Law or regulations of the Department related to the permitted activity.

6. **Permit Transfer** Permits are transferrable unless specifically prohibited by statute, regulation or another permit condition. Applications for permit transfer should be submitted prior to actual transfer of ownership.

NEW YORK STATE DEPARTMENT OF ENVIRONMENTAL CONSERVATION
Facility DEC ID 2-6304-01440

NOTIFICATION OF OTHER PERMITTEE OBLIGATIONS

Item A: Permittee Accepts Legal Responsibility and Agrees to Indemnification
The permittee, excepting state or federal agencies, expressly agrees to indemnify and hold harmless the Department of Environmental Conservation of the State of New York, its representatives, employees, and agents ("DEC") for all claims, suits, actions, and damages, to the extent attributable to the permittee's acts or omissions in connection with the permittee's undertaking of activities in connection with, or operation and maintenance of, the facility or facilities authorized by the permit whether in compliance or not in compliance with the terms and conditions of the permit. This indemnification does not extend to any claims, suits, actions, or damages to the extent attributable to DEC's own negligent or intentional acts or omissions, or to any claims, suits, or actions naming the DEC and arising under Article 78 of the New York Civil Practice Laws and Rules or any citizen suit or civil rights provision under federal or state laws.

Item B: Permittee's Contractors to Comply with Permit
The permittee is responsible for informing its independent contractors, employees, agents and assigns of their responsibility to comply with this permit, including all special conditions while acting as the permittee's agent with respect to the permitted activities, and such persons shall be subject to the same sanctions for violations of the Environmental Conservation Law as those prescribed for the permittee.

Item C: Permittee Responsible for Obtaining Other Required Permits
The permittee is responsible for obtaining any other permits, approvals, lands, easements and rights-of-way that may be required to carry out the activities that are authorized by this permit.

Item D: No Right to Trespass or Interfere with Riparian Rights
This permit does not convey to the permittee any right to trespass upon the lands or interfere with the riparian rights of others in order to perform the permitted work nor does it authorize the impairment of any rights, title, or interest in real or personal property held or vested in a person not a party to the permit.

NOTICE OF INTENT TO COMMENCE WORK

Date: _____

NYSDEC Marine Resources
Attn. Jesselynne Krief
N.Y.S.D.E.C Region 2 Office
47-40 21st Street
Long Island City, N.Y. 11101

Re: NYSDEC Permit No. 2-6304-01440/00004
NYC Dept. Of Transporation
Borden Avenue Bridge over Dutch Kills
Borden Avenue between 27th Street & Review Avenue
Queens, New York

Dear Ms. Krief:

In accordance with Natural Resource Condition 5 of the referenced permit, I hereby serve notice to commence work on _____, 200____.

This is also to certify that, having read this entire permit, I am fully aware of and understand the general and special conditions therein, and agree to comply with all such conditions further understand that prior to undertaking any modification to the subject work, I must seek and receive written approval of the NYSDEC Regional Permit Administrator.

_____
Signature of Permittee

_____
Name of Permittee (please print)

_____
Signature of Contractor

_____
Name of Contractor (please print)

_____
Street Address of Contractor

_____
City, State, & Zip Code of Contractor

_____
Telephone Number of Contractor

WARNING

The permittee and his contractor (if any) are required to follow all permit conditions. Violations of the permit may lead to legal action, including the imposition of substantial monetary fines and corrective work.

cc: Environmental Permits

95-20-1 (11/03) -9d

New York State
Department of Environmental Conservation

NOTICE

The Department of Environmental Conservation (DEC) has issued permit(s) pursuant to the Environmental Conservation Law for work being conducted at this site. For further information regarding the nature and extent of the approved work and any Department conditions applied to the approval, contact the Regional Permit Administrator listed below. Please refer to the permit number shown when contacting the DEC.

Permit Number 2-6302-01440/00004

Expiration Date December 31, 2010

Regional Permit Administrator

John F. Cryan
47-40 21st Street
Long Island City, New York 11101
(718) 482-4997

NOTE: This notice is NOT a permit

010/010

New York State Department of Environmental Conservation
Division of Environmental Permits, Region 2
47-40 21ST Street, Long Island City, NY 11101-5407
Phone: (718) 482-4997 • **FAX:** (718) 482-4975
Website: www.dec.state.ny.us

Alexander B. Grannis
Commissioner

April 2, 2009

Alan P. Marchan, P.E.
STV Incorporated
225 Park Avenue South
New York, NY 10003

Re: NYSDEC Permit No. 2-6304-01440/00004
NYC Dept. Of Transportation
Borden Avenue Bridge over Dutch Kills
Borden Avenue between 27th Street & Review Avenue
Queens, New York
6NYCRR Part 608 - Water Quality Certification
NYCRR Part 661 - Tidal Wetlands
ECL Article 15 - Protection of Waters
NOTICE OF PERMIT MODIFICATION

Dear Mr. Marchan:

In response to your request, please be advised that the above referenced permit has been modified to provide clarification of the conditions contained in the previously issued permit.

Technical questions concerning the permit should be directed to Jesselynne Krief in the NYSDEC Bureau of Marine Resources at 718 482-6464. Administrative questions should be directed to Tammy Greco in the NYSDEC Division of Environmental Permits at 718 482-4997.

Sincerely,

Harold J. Dickey
Deputy Regional Permit Administrator

cc: NYC Dept. Of Transportation
NYSDEC Marine Resources
NYSDEC Law Enforcement

NEW YORK STATE DEPARTMENT OF ENVIRONMENTAL CONSERVATION
Facility DEC ID 2-6304-01440

PERMIT

Under the Environmental Conservation Law (ECL)

Permittee and Facility Information

Permit Issued To:
NYC DEPT OF TRANSPORTATION
40 WORTH ST 11TH FL
NEW YORK, NY 10003
(212) 676-0557

Facility:
NYC DOT - BORDEN AVE BRIDGE
BORDEN AVE BTWN 25TH & 27TH ST
LONG ISLAND CITY, NY 11101

Facility Location: in QUEENS COUNTY **Village:** Long Island City
Facility Principal Reference Point: NYTM-E: 589,262 NYTM-N: 4510.311
Latitude: 41°44'20.1" Longitude: 74°56'34.1"
Project Location: South of Long Island Expressway between 27th Street & Review Avenue
Authorized Activity: Repair / replace west bridge abutment.

Permit Authorizations

Tidal Wetlands - Under Article 25
Permit ID 2-6304-01440/00004

New Permit	Effective Date: 2/12/2009	Expiration Date: 12/31/2010
Modification # 1	Effective Date: 4/2/2009	Expiration Date: 12/31/2010

Water Quality Certification - Under Section 401 - Clean Water Act
Permit ID 2-6304-01440/00005

New Permit	Effective Date: 2/12/2009	Expiration Date: 12/31/2010
Modification # 1	Effective Date: 4/2/2009	Expiration Date: 12/31/2010

Excavation & Fill in Navigable Waters - Under Article 15, Title 5
Permit ID 2-6304-01440/00006

New Permit	Effective Date: 2/12/2009	Expiration Date: 12/31/2010
Modification # 1	Effective Date: 4/2/2009	Expiration Date: 12/31/2010

NYSDEC Approval

By acceptance of this permit, the permittee agrees that the permit is contingent upon strict compliance with the ECL, all applicable regulations, and all conditions included as part of this permit.

Permit Administrator: JOHN F CRYAN, Regional Permit Administrator
Address: NYSDEC REGION 2 HEADQUARTERS
47-40 21ST ST
LONG ISLAND CITY, NY 11101 -5407

Authorized Signature: John J. Cryan Date 04/02/09

the proposed Mitigation Plan, Permittee must submit a revised proposed Mitigation Plan incorporating DEC's comments. Upon approval of the proposed Mitigation Plan Permittee must complete the Mitigation Plan pursuant to the approved schedule or, if no schedule is approved, without delay. Contact Jesselynne Krief in the NYSDEC Bureau of Marine Resources at (718) 482-6464 if you have any questions concerning the Mitigation Plan.

4. **Notification of Construction Option** Within (1) one week of the completion of the inspection of the bridge abutment timber pile support structure, Permittee must provide an inspection report and written notification stating which of the two approved construction methods (replacement or repair) will be employed to: NYSDEC Marine Resources, 47-40 21st Street, Long Island City, New York 11101 (Attention: Jesselynne Krief).

5. **Notice of Intent to Commence Work** At least five (5) days prior to commencement of the permitted activity, Permittee must complete and submit the attached "Notice of Intent to Commence Work" to NYSDEC Bureau of Marine Resources, 47-40 21st Street, Long Island City, New York 11101 (Attention: Jesselynne Krief).

6. **Post Permit Sign** The permit sign enclosed with this permit shall be posted in a conspicuous location on the worksite and adequately protected from the weather.

7. **Best Management Practices** Best management practices will be employed to prevent the loss of construction materials, debris, and sediment from entering the waterways. Such practices may include, but are not limited to silt fencing, hay bales, and floating booms. At minimum a floating boom with attached silt curtain must be installed encircling the entire project site for both the preliminary inspection of the relieving platform and for the duration of the project.

8. **Precautions Against Contamination of Waters** All necessary precautions shall be taken to preclude contamination of any wetland or waterway by suspended solids, sediments, fuels, solvents, lubricants, epoxy coatings, paints, concrete, leachate or any other environmentally deleterious materials associated with the project.

charge to Tidal Wetlands Prohibited There will be no discharge of runoff or other effluent over or through any abutment wall or shoreline stabilization structure or into any tidal wetland or tidal wetlands adjacent area (unless specifically authorized herein).

ncrete / Leachate Discharges Prohibited During construction, concrete or leachate must not escape or be discharged, nor will washings from transit mix trucks, mixers, or other devices enter tidal wetlands and or protected buffer areas.

11. **Excavate Backfill Prior to Removal of Abutment** Prior to any construction or removal of the abutment and other shoreline stabilization structures all backfill must be excavated landward of the abutment and retained so as not to enter the waterway, tidal wetland or protected buffer area.

nstruct Abutment Prior to Fill Placement Reconstruction or repair of the west abutment wall must be completed prior to placement of any fill material behind this structure.

13. **Installation of Cofferdam & Sheeting Protection Prior to Excavation** All cofferdams and protective sheeting functioning as the seaward project boundaries must be installed prior to excavation and removal of existing structures and fill immediately landward of such structures.

14. **Cofferdam Removal** Within (30) thirty days of the completion of the abutment wall reconstruction, all cofferdams and protective sheeting installed seaward of the abutment wall are temporary and must be pulled in their entirety.

15. **No Weep Holes** The construction of weep holes in the abutment wall is strictly prohibited.

16. **Discharge of Effluent Obtained Through Excavation of Material** The effluent discharged from the settling tank into Dutch Kills Creek must not contain a visible contrast to the receiving water. If the effluent bears a substantial visible contrast to the receiving waters, discharging must cease and the settling time must be lengthened or the decant water must be filtered so that no visible contrast is seen.

17. **No Equipment Below High Water** Equipment operation below apparent high water is strictly prohibited.

18. **Dewatering** All sediment removed from within the excavation area must be dewatered using the settling tank shown on project plans referenced in Natural Resource Permit Condition 2. All effluent must be discharged into areas of the Dutch Kills with water depths greater than 4 feet at mean low water.

19. **Storage of Construction Equipment & Materials** The storage of construction equipment and materials must be confined to within the project work site and or upland areas greater than 35 linear feet from the tidal wetland boundary and outside the area of excavation.

sposal of Excavated Material All dredged material must be disposed on an approved upland site and be retained so as to ot re-enter any water body, tidal wetland, or protected buffer area. Excavated sediments must be placed directly into the approved disposal site or conveyance vehicle. The sidecasting (double dipping) or temporary storage of excavated material is prohibited.

21. **Debris Removal**
Should any demolition or construction debris fall into the waterway or enter the tidal wetlands, it must be removed immediately.

22. **Debris Disposal** Any debris or excess material from construction of this project will be completely removed from the adjacent area (upland) and removed to an approved upland area for disposal. No debris is permitted in tidal wetlands or tidal wetlands adjacent area or protected buffer areas. All demolition and construction debris must be properly disposed of at a licensed facility.

23. Clean Fill Material Only All fill material must consist of "clean" sand, gravel, or soil. The use of material such as asphalt, slag, fly-ash, recycled concrete aggregate (RCA), broken concrete, or demolition debris is strictly prohibited.

ntainment of Disturbed Soils AAll disturAlllAll disturbed areas where soil will be temporarily exposed or stockpiled for longer than one (1) week will be contained by a continuous line of staked hay bales/silt curtain (or other NYSDEC approved method) placed on the seaward side between the fill and wetland or protected buffer area. Tarps are authorized to supplement these approved methods.

25. **No Interference With Navigation** There shall be no unreasonable interference with navigation by the work herein authorized.

26. **Prior Approval of Changes** If the Permittee desires to make any changes in construction techniques, species to be planted, the site plan, any mitigation plan, scheduling or staging of construction, or any other aspect of this project, the Permittee shall submit a written request to the

Regional Permit Administrator to make such proposed changes and shall not make such changes unless authorized in writing by the Department.

27. **Minimize Adverse Impacts to Wetlands, Wildlife, Water** All work must be performed in a manner which minimizes adverse impacts to wetlands, wildlife, water quality and natural resources.

28. **Failure to Meet Permit Conditions** Failure of the permittee to meet all the conditions of this permit is a violation of this permit and grounds for an order to immediately cease the permitted activity at the project site.

29. **State May Require Site Restoration** If upon the expiration or revocation of this permit, the project hereby authorized has not been completed, the applicant shall, without expense to the State, and to such extent and in such time and manner as the Department of Environmental Conservation may require, remove all or any portion of the uncompleted structure or fill and restore the site to its former condition. No claim shall be made against the State of New York on account of any such removal or alteration.

30. **State May Order Removal or Alteration of Work** If future operations by the State of New York require an alteration in the position of the structure or work herein authorized, or if, in the opinion of the Department of Environmental Conservation it shall cause unreasonable obstruction to the free navigation of said waters or flood flows or endanger the health, safety or welfare of the people of the State, or cause loss or destruction of the natural resources of the State, the owner may be ordered by the Department to remove or alter the structural work, obstructions, or hazards caused thereby without expense to the State, and if, upon the expiration or revocation of this permit, the structure, fill, excavation, or other modification of the watercourse hereby authorized shall not be completed, the owners, shall, without expense to the State, and to such extent and in such time and manner as the Department of Environmental Conservation may require, remove all or any portion of the uncompleted structure or fill and restore to its former condition the navigable and flood capacity of the watercourse. No claim shall be made against the State of New York on account of any such removal or alteration.

31. **State Not Liable for Damage** The State of New York shall in no case be liable for any damage or injury to the structure or work herein authorized which may be caused by or result from future operations undertaken by the State for the conservation or improvement of navigation, or for other purposes, and no claim or right to compensation shall accrue from any such damage.

WATER QUALITY CERTIFICATION SPECIFIC CONDITIONS

1. **Water Quality Certification** The NYS Department of Environmental Conservation hereby certifies that the subject project will not contravene effluent limitations or other limitations or standards under Sections 301, 302, 303, 306 and 307 of the Clean Water Act of 1977 (PL 95-217) provided that all of the conditions listed herein are met.

GENERAL CONDITIONS - Apply to ALL Authorized Permits:

1. **Facility Inspection by The Department** The permitted site or facility, including relevant records, is subject to inspection at reasonable hours and intervals by an authorized representative of the Department of Environmental Conservation (the Department) to determine whether the permittee is complying with

this permit and the ECL. Such representative may order the work suspended pursuant to ECL 71- 0301 and SAPA 401(3).

The permittee shall provide a person to accompany the Department's representative during an inspection to the permit area when requested by the Department.

A copy of this permit, including all referenced maps, drawings and special conditions, must be available for inspection by the Department at all times at the project site or facility. Failure to produce a copy of the permit upon request by a Department representative is a violation of this permit.

2. **Relationship of this Permit to Other Department Orders and Determinations** Unless expressly provided for by the Department, issuance of this permit does not modify, supersede or rescind any order or determination previously issued by the Department or any of the terms, conditions or requirements contained in such order or determination.

3. **Applications For Permit Renewals, Modifications or Transfers** The permittee must submit a separate written application to the Department for permit renewal, modification or transfer of this permit. Such application must include any forms or supplemental information the Department requires. Any renewal, modification or transfer granted by the Department must be in writing. Submission of applications for permit renewal, modification or transfer are to be submitted to:

Regional Permit Administrator
NYSDEC REGION 2 HEADQUARTERS
47-40 21ST ST
LONG ISLAND CITY, NY11101 -5407

4. **Submission of Renewal Application** The permittee must submit a renewal application at least 30 days before permit expiration for the following permit authorizations: Tidal Wetlands, Water Quality Certification, Excavation & Fill in Navigable Waters.

5. **Permit Modifications, Suspensions and Revocations by the Department** The Department reserves the right to modify, suspend or revoke this permit. The grounds for modification, suspension or revocation include:

a. materially false or inaccurate statements in the permit application or supporting papers;

b. failure by the permittee to comply with any terms or conditions of the permit;

c. exceeding the scope of the project as described in the permit application;

d. newly discovered material information or a material change in environmental conditions, relevant technology or applicable law or regulations since the issuance of the existing permit;

e. noncompliance with previously issued permit conditions, orders of the commissioner, any provisions of the Environmental Conservation Law or regulations of the Department related to the permitted activity.

6. **Permit Transfer** Permits are transferrable unless specifically prohibited by statute, regulation or another permit condition. Applications for permit transfer should be submitted prior to actual transfer of ownership.

NOTIFICATION OF OTHER PERMITTEE OBLIGATIONS

Item A: Permittee Accepts Legal Responsibility and Agrees to Indemnification
The permittee, excepting state or federal agencies, expressly agrees to indemnify and hold harmless the Department of Environmental Conservation of the State of New York, its representatives, employees, and agents ("DEC") for all claims, suits, actions, and damages, to the extent attributable to the permittee's acts or omissions in connection with the permittee's undertaking of activities in connection with, or operation and maintenance of, the facility or facilities authorized by the permit whether in compliance or not in compliance with the terms and conditions of the permit. This indemnification does not extend to any claims, suits, actions, or damages to the extent attributable to DEC's own negligent or intentional acts or omissions, or to any claims, suits, or actions naming the DEC and arising under Article 78 of the New York Civil Practice Laws and Rules or any citizen suit or civil rights provision under federal or state laws.

Item B: Permittee's Contractors to Comply with Permit
The permittee is responsible for informing its independent contractors, employees, agents and assigns of their responsibility to comply with this permit, including all special conditions while acting as the permittee's agent with respect to the permitted activities, and such persons shall be subject to the same sanctions for violations of the Environmental Conservation Law as those prescribed for the permittee.

Item C: Permittee Responsible for Obtaining Other Required Permits
The permittee is responsible for obtaining any other permits, approvals, lands, easements and rights-of-way that may be required to carry out the activities that are authorized by this permit.

Item D: No Right to Trespass or Interfere with Riparian Rights
This permit does not convey to the permittee any right to trespass upon the lands or interfere with the riparian rights of others in order to perform the permitted work nor does it authorize the impairment of any rights, title, or interest in real or personal property held or vested in a person not a party to the permit.

From: Regina Seetahal
To: Anthony Morenzi; Gail Hintz; Harold Dickey; John Cryan; Louis Oliva;...
Date: 4/7/2009
Time: 3:00 PM - 4:00 PM
Subject: Meeting on Coppola project
Place: R2 Conf Room

NOTICE OF INTENT TO COMMENCE WORK

Date: _____

NYSDEC Marine Resources
Attn. Jesselynne Krief
N.Y.S.D.E.C Region 2 Office
47-40 21st Street
Long Island City, N.Y. 11101

Re: NYSDEC Permit No. 2-6304-01440/00004
NYC Dept. Of Transporation
Borden Avenue Bridge over Dutch Kills
Borden Avenue between 27th Street & Review Avenue
Queens, New York

Dear Ms. Krief:

In accordance with Natural Resource Condition 5 of the referenced permit, I hereby serve notice to commence work on _____, 200____.

This is also to certify that, having read this entire permit, I am fully aware of and understand the general and special conditions therein, and agree to comply with all such conditions further understand that prior to undertaking any modification to the subject work, I must seek and receive written approval of the NYSDEC Regional Permit Administrator.

_____
Signature of Permittee

_____
Name of Permittee (please print)

_____
Signature of Contractor

_____
Name of Contractor (please print)

_____
Street Address of Contractor

_____
City, State, & Zip Code of Contractor

_____
Telephone Number of Contractor

WARNING

The permittee and his contractor (if any) are required to follow all permit conditions. Violations of the permit may lead to legal action, including the imposition of substantial monetary fines and corrective work.

cc: Environmental Permits

95-20-1 (11/03) –9d

New York State
Department of Environmental Conservation

NOTICE

The Department of Environmental Conservation (DEC) has issued permit(s) pursuant to the Environmental Conservation Law for work being conducted at this site. For further information regarding the nature and extent of the approved work and any Department conditions applied to the approval, contact the Regional Permit Administrator listed below. Please refer to the permit number shown when contacting the DEC.

Regional Permit Administrator

John F. Cryan
47-40 21st Street
Long Island City, New York 11101
(718) 482-4997

Permit Number **2-6302-01440/00004**

Expiration Date **December 31, 2010**

NOTE: This notice is **NOT** a permit

New York State Department of Environmental Conservation
Division of Environmental Permits, Region 2
47-40 21ST Street, Long Island City, NY 11101-5407
Phone: (718) 482-4997 • FAX: (718) 482-4975
Website: www.dec.state.ny.us

Alexander B. Grannis
Commissioner

May 22, 2009

Beatrice Duran
New York City Department of Transportation
Division of Bridges
2 Rector Street-7th Floor
New York, New York 10006

Re: NYSDEC Permit No. 2-6304-001440/00004
New York City Department of Transportation
Borden Avenue Bridge over Dutch Kills
Borden Avenue between 27th Street & Review Avenue
Queens, New York

Dear Ms. Duran:

It has come to the Department's attention that the proposed method of dewatering, as previously approved by the above referenced permit, has changed. NYSDEC is in receipt of a Long Island Well permit application submitted by Maracap Constructions Industries, Inc. on behalf on NYCDOT for dewatering of the same area through the installation of 12 wells.

The permit authorized the dewatering of excavated sediment through the use of a settling tank and the discharge of the related effluent into the Dutch Kills waterway at water depths greater than 4' at mean Low Water (MLW). The proposed well point dewatering will increase the flow rate of effluent entering the water body and may have additional impacts which were not considered previously.

Therefore, NYSDEC requests that within one (1) week of the receipt of this letter NYCDOT submit a formal request to modify the above referenced permit. The modification request must be accompanied by an application fee of $200 (see attached fee schedule).

If NYCDOT a fails to provide a request for permit modification within one (1) week of the receipt of this letter NYSDEC will initiate the permit modification in accordance with the provisions of 6NYCRR Part 621.14(a), for the following reasons;

1. Exceeding the scope of the project as described in the permit application;

The proposed method of dewatering has changed to incorporate the installation of 12 wells.

2. Failure by the permittee to comply with any terms or conditions of the permit.

The installation of Long Island wells was not approved by permit # 2-6304-01440/00004.

3. Newly discovered material information or material change in environmental conditions, relevant technology or applicable law or regulations since the issuance of the existing permit.

Long Island well permit application #2-6304-01440/00008 submitted by Maracap Construction Industries, Inc. on behalf of NYCDOT proposes to modify the previously authorized dewatering methods..

The Department acknowledges NYCDOT's urgent need for the proposed repairs and will review the modification request as expeditiously as possible.

Technical questions concerning this matter should be directed to Jesselynne Krief in the NYSDEC Bureau of Marine Resources at 718 482-6464. Administrative questions should be directed to Tammy Greco in the NYSDEC Division of Environmental Permits at 718 482-4997.

Sincerely,

John F. Cryan
Regional Permit Administrator

cc: George Klein, NYCDOT
Michael Tumulty, STV
John Aitkin, Maracap
Joe Mahon, Moretrench
Stephen A. Watts III, NYSDEC Permits

NOTICE TO ALL DEC PERMIT APPLICANTS REGARDING NEW PERMIT APPLICATION FEES FOR FRESHWATER AND TIDAL WETLANDS PERMITS EFFECTIVE APRIL 1, 2009

Please be advised that the NYS Legislature passed legislation amending Section 70-0117 of the Environmental Conservation Law (Uniform Procedures) to require application fees for certain regulated activities requiring a permit from the Department. Any applications received on or after April 1, 2009 will be subject to the following fee schedule for each application, as applicable, before the Department can issue a permit decision.

Freshwater Wetlands Permits (ECL Article 24)

- Minor projects (go to http://www.dec.ny.gov/permits/6275.html) $50
- Modifications to Permits. $50
- Residential projects defined as associated with one single family dwelling and customary appurtenances thereto $50
- Multiple family dwellings and customary appurtenances thereto $100
- Other projects $200

Tidal Wetlands Permits (ECL Article 25)

- Minor projects (go to http://www.dec.ny.gov/permits/6355.html) $200
- Modifications to Permits $200
- Other projects $900

No cash or credit cards may be used for payment at this time. Only checks or money orders will be accepted, made payable to the New York State Department of Environmental Conservation (NYSDEC). The cancelled check will be your receipt. Please file your payment with your permit application. There are no provisions for partial or full refund once you file an application, regardless of project changes or permit decision. If you have any questions regarding these requirements, please contact the Environmental Permits Unit in any DEC regional office (go to http://www.dec.ny.gov/about/39381.html). Thank you for your cooperation.

STV

September 8, 2009

Mr. Harold J. Dickey
NYS Department of Environmental Conservation
Division of Environmental Permits, Region 2
47-40 21st Street
Long Island City
New York, NY 11101

Reference: **Emergency Reconstruction of West Abutment and Wingwalls Borden Avenue Bridge over Dutch Kills, NYCDOT Contract HBQ1162E**
NYSDEC Permit ID-2-6304-01440/00004/00005/00006

Subject: Request for Permit Modification

Dear Mr. Dickey:

On behalf of the NYC Department of Transportation (NYCDOT), STV Inc. requests that the above referenced permits be modified. NYCDOT and its consultant and contractors have had a series of technical discussions and meetings, both on and off site, with Ms. Jesselynne Krief of NYSDEC's Bureau of Marine Services concerning the emergency bridge repair. This request for permit modification is to formally respond to Ms. Krief's comments and field observations regarding potential impacts to the shoreline and water way and to provide engineering plans that supplement and, in some cases, supersede plans submitted with the initial Permit Application which was approved on February 12, 2009, and the Notice of Permit Modification issued on April 2, 2009.

The original permit application was submitted and approved prior to the selection of one of two bridge repair options which were being considered by the NYCDOT. The alternative selection that offered the best long term solution could not be made until detailed inspections of the abutment wall and wingwalls were subsequently performed. As a result of the decision to proceed with full replacement of the bridge's western abutment and its wing walls and subsequent discovery of petroleum-impacted sediment and water during excavation and dewatering, construction modifications and systems for handling and treatment of impacted sediment and water have been evaluated and designed. The following paragraphs address modifications to plans for activities that may have potential impacts to the shoreline and water way and identify the attached plans that support the modifications.

It is noted that many of plans have been previously submitted to the NYSDEC Spills Division in a Corrective Action Plan (CAP) to address Spill Case No. 0903437 at the site. The CAP was approved by the NYSDEC Division of Marine Resources and the Bureau of Spill Prevention Response on August 31, 2009.

Item 1: Outfall Pipe to the Dutch Kills

During removal of the southwest wing wall, an existing storm sewer outfall was destroyed. In order to provide a discharge outlet for the project's dewatering operation, a 12-inch temporary sewer pipe was installed, beginning at the Borden Avenue regulator chamber and routed for discharge to an outflow position into the Dutch Kills adjacent to the southwestern most cofferdam. As communicated to Mr. John F. Cryan, NYSDEC Regional Permit Administrator, in a letter dated May 29, 2009, effluent from the outflow pipe was discharged in a manner designed to minimize the potential for suspending bottom sediments and increasing turbidity. This was accomplished by placing a small (4 ft. by 4 ft.) temporary platform approximately 0.5 to 1.0 ft. below the invert of the discharge pipe. The platform was secured to the existing shoring will be removed when the dewatering

AN EMPLOYEE-OWNED COMPANY PROVIDING QUALITY SERVICE SINCE 1912 | 225 PARK AVENUE SOUTH
NEW YORK, NEW YORK 10003-1604
(212) 777-4400 FAX: (212) 529-5237

operations are completed. The platform was constructed with 1 in. by 6 in. members across the top, spaced approximately 1 to 2 inches apart to dissipate energy from the discharged water.

In addition, it was necessary to remove several feet of debris and fill material from adjacent to the shoreline and trench the piping from the chamber to the shoreline to allow gravity flow of the effluent to the discharge point. This outfall will now be sued to discharge treated effluent from the dewatering operation.

- Temporary Outflow – Baffle Plan and Detail - Depicts the discharge outfall to the Dutch Kills in plan and section view with details of the baffle platform

- Outflow Pipe and Flume Details – Depicts details of the flume connection of the inlet for the treated wastewater discharge to the discharge pipe

Item 2: Extension of the Outside Edges of the Cofferdam

The original construction sequence for the western wing walls and abutment included a smaller cofferdam, a large concrete tremie and underwater demolition. The design was changed when underwater demolition was eliminated and an alternate plan was developed to use well points to pump water from within the cofferdam prior to construction. A new and larger cofferdam was designed to allow sufficient space to install the well points and allow work to proceed. In addition, diagonal/bracing struts were installed within the cofferdam to strengthen the cofferdam perimeter while dewatering was being performed. The actual layout changed slightly to agree with updated survey data and to ensure clearing of all existing and proposed battered piles.

- Temporary Outflow – Baffle Plan and Detail - This surveyed drawling also shows the full extent of the outside edges of the cofferdam that protrude into the Dutch Kills.

Item 3: Temporary Pontoon Bridge

The Borden Avenue Bridge is currently in a retraced position during emergency repairs. During the initial emergency repair activities a floating pontoon bridge was constructed across the Dutch Kills from the western embankment to access equipment staged on the east side of the bridge. Access stairs are attached at each end with lockable gates and the walkway can swing out of the Dutch Kills as required to allow marine traffic.

- General Plan – Proposed Option 2 – Shows the temporary timber pontoon bridge located to the north of the northern end of the cofferdam

- Temporary Floating Walkway During Construction Schematic – Provides construction details and notes

Item 4: Design Modifications to the Western Bridge Abutment and Wingwalls

The original abutment and wing walls were designed as gravity walls; therefore they were fairly massive in size. The failure of the south west wing wall was due to this concept; the wall began to slide on top of the timber platform. In order to avoid this problem and also to make a stronger, code abiding abutment/wing wall a new system based on piles was chosen. This design allowed the size of the abutment/walls to be much smaller and also provided a far superior slide resistance. It was for these economic and functional advantages that the abutment and wing walls were redesigned as shown on the following plans.

- Construction Staging Area Section 5 – Shows cross sections of the Wingwall and Abutment Structures keyed into elevations.

- Backfill Sections – Shows cross sections of the backfill to be placed behind the abutment and wing wall of the western side of the bridge.

Item 4: Temporary Sediment Staging Area

Excavated stream sediment will be stored in a nearby lot beneath the Long Island Expressway (LIE)/495 viaduct at 27th Street and 51st Avenue (approximately 500 feet north of the project site). The lot is leased by the NYCDOT from the City of New York. The use of this additional work area is necessary to allow the temporary staging of excavated material generated during around the clock dewatering and excavation operations.

The sediment staging area will be cleared of vegetation prior to placement of filter fabric and 6- mil poly sheeting. A minimum of a 6- inch thick slab will be placed on top of the poly and filter fabric. The concrete slab will be surrounded with 6-inch curbing. Concrete jersey barriers, interlocked with additional poly placed over them to the ground will be placed adjacent to curbing. Hay bales will be placed as an additional layer of containment along the perimeter of the area (fence line).

The 6- inch minimum concrete slab will be sloped to collect water from the excavated sediment into a NYC Type II Precast Catch Basin with a precast top and a C.I drain inlet. The precast top will be set 6" below the top of the new slab. The casting will then be set on top, backfilled all around, and the new concrete slab will be poured over the top of the precast cover and flush to the casting. If drained water accumulates in the basin, it will be pumped dry as necessary using either 55-gallon drums or a vacuum truck and transported to the on-site treatment system for treatment prior to discharge into the Dutch Kills.

Newly excavated sediment will be transported via a 20-cubic yard water-tight dump truck to the lot and placed in a conical pile within the containment to facilitate excess water runoff into the collection sump. Once this material has been determined to be sufficiently drained, it will be spread out for drying and mixing with kiln dust to await loading and off-site transport. The following attached figures provide plan and cross section details of the Sediment Staging Area.

- Temporary Sediment Staging Area Figure 3- Depicts a plan view of the Temporary Sediment Storage Area to be located to the north of the bridge site.

- Temporary Sediment Staging Area Sheet 2, Figure 3A – Depicts a cross section of the concrete pad and barriers as well as how an overhead tarp will be attached to existing bridge columns and bracing.

Item 5: Streambank Protection

At the time of the initial NYSDEC Permit Application submission, the engineering of appropriate stream bank protections measures (rip rap) had not been developed. The following plans detail the cross sections and extent

of engineering controls designed to protect the stream bank areas adjacent to the southwest and northeast wing walls to the western bridge abutment.

- Streambank Protection Plan – Provides a plan view of the extent of stream bank protection to the northern and southern ends of the wingwalls
- Stream Embankment 1 – Shows a cross section of proposed streambank protection on the north side of the bridge. Protection consists of new stone riprap atop geotech fiber bedding. Drawing notes describe construction details.
- Stream Embankment 2 – Shows a cross section of the proposed streambank protection measures on the south side of the bridge

Item 6: East Side Bridge Work

Construction activity to the east side of the bridge includes changes of construction sequence, pile jacketing, repair to the breastwork and structural repair to the bridge span with Class A Containment for painting, and concrete deck replacement.

We trust this information sufficiently supports our request for permit modification. If you have any questions or additional comments, please contact Mr. Donald Hessemer or Mr. Alan Marchan at 212-777-4400.

Sincerely,
STV, Incorporated

Donald P. Hessemer
Environmental Project Manager

Alan P. Marchan, P.E.
Project Manager

cc: Jesselynne Krief, NYSDEC, Bureau of Marine Services
Raphael Ketani, NYSDEC Bureau of Spill Prevention and Response
George Klein, NYCDOT
Kedari Reddy, NYCDOT
Beatriz Duran, NYCDOT
John Kurre, NYCDOT

Attachments: Temporary Outflow Baffle Plan and Detail
Outflow Pipe and Flume Details
General Plan – Proposed Option 2
Temporary Floating Walkway during Construction Schematic
Construction Staging Area Section 5

Backfill Sections
Temporary Sediment Staging Area – Figure 3
Temporary Sediment Staging Area Sheet 2, Figure 3A
Streambank Protection Plan
Stream Embankment 1
Stream Embankment 2

10/13/2009

New York State Department of Environmental Conservation
Notice of Incomplete Application - This is NOT a Permit

Application ID: 2-6304-01440/00004

Batch Number: 614606

→ G. Klein
J. Kurre

Facility: NYC DOT - BORDEN AVE BRIDGE
BORDEN AVE BTWN 25TH & 27TH ST
LONG ISLAND CITY, NY 11101

Applicant: NYC DEPT OF TRANSPORTATION
40 WORTH ST 11TH FL
NEW YORK, NY 10003

Owner ID: 19237

2009 OCT 14 A 8:59
D/C-BRIDGES

Permit(s) Applied for: 1 - Article 25 Tidal Wetlands
1 - Section 401 - Clean Water Act Water Quality Certification
1 - Article 15 Title 5 Excavation & Fill in Navigable Waters

Project Location: in QUEENS in QUEENS COUNTY

Your application for Permit is incomplete. The following items are required:

1. As previously requested, NYSDEC requires the revision of permitted drawings to reflect the currently proposed conditions. Three (3) full size scalable copies of each revised plan must be submitted. Please include the datum cited wherever MHW/MLW is shown. All changes to the previously permitted design must be incorporated; at minimum the following revisions must be made;

a. Sheet 8 - include existing shoreline conditions, and location of MHW/MLW for the south west shoreline.

b. Sheet 67 - include existing shoreline conditions, and location of MHW/MLW for the south west, and limits for the staging areas proposed at the east abutment.

c. Sheet 78- No revisions are necessary to this plan as long as the previously approved design is still proposed.

d. Sheet 72- No revisions are necessary to this plan as long as the previously approved design is still proposed.

e. Sheet 75- No revisions are necessary to this plan as long as the previously approved design is still proposed.

f. Sheet 82- This plan must be updated to show an accurate distance between the abutment face and the steel sheet pile, as well as the current limit of excavation. All distances provided must show either the maximum extent or provide a range for max and min distances from the abutment.

g. Sheet 83- revisions submitted 9/10/09 see additional required revisions as per items 2 and 3 below).

h. Sheet 88- revisions submitted 9/10/09 see additional required revisions as per items 2 and 3 below).

i. Sheet 71- This plan must be revised to show the current location of the cofferdam/braces; include existing shoreline conditions and the location of MHW/MLW for the southwest shoreline intersecting with the west bridge abutment. This plan should also show the location of all well points installed for the dewatering operation.

The following additional details are still required.

i. An elevation for the replacement of the pile dolphins. The detail must provide measurements for the size and type of the piles installed, as well as how perforation of the impermeable membrane installed to isolate the remaining oil laden sediment will be prevented.

ii. A cross sectional detail indicating how the float bridges/stairs intersect with both the east and west shorelines. Two details may be submitted if necessary. The cross sectional details should be oriented as if looking perpendicular to the float bridges/stairs and should include any gates proposed.

2. NYSDEC requests the following revisions to the plans submitted by STV which accompanied the modification request dated September 9, 2009. Three (3) full size scalable copies of each revised plan must be submitted.

a. Sheet 88- Please remove note 4. All fill landward of the cofferdam must be placed prior to removal of the cofferdam. This plan must be updated to show an accurate distance between the abutment face and the steel sheet pile, as well as the current limit of excavation. All distances provided must show either the maximum extent or provide a range for max and min distances from the abutment. Please provide the size of the rounded river bed stone to be used as fill. Additional revisions requested by Spills are listed in question 3.

b.Sheet 83- Please verify that the location of Section C and Section D are still the locations indicated by the permitted sheet 71 and that the location of MHW/MLW and the mud line are accurate. This plan must be updated to show an accurate distance between the abutment face and the steel sheet pile, as well as the current limit of excavation. All distances provided must show either the maximum extent or provide a range for max and min distances from the abutment. This plan must also show the backfill between the abutment face and the cofferdam and any liner proposed. Additional revisions requested by Spills are listed in question 3.

c. Temporary Floating Walkway During Construction Schematic- Please provide a unique sheet number for this plan. All information on this plan must be drawn to scale. The plan should indicate where and how the safety boat will be moored as well as the limits of the staging area. What type and size of safety boat will be employed? What materials will be stored in the staging area? How will the floating walkway be moved into the open/closed positions? Will the floating walkway be left in the waterway when construction is not active? If so, will it be left in the open or closed position? Will the floating bridge be utilized for the duration of the construction activities?

d. Figure 2- Please provide a unique sheet number for this plan. Please provide the scale used for the plan and both sections. What datum are the elevations provided in?

e. Figure 2A- Please provide a unique sheet number for this plan.

f. Figure 3- Please provide a unique sheet number for this plan. An earlier version of this plan was inadvertently included with the modification request. The submitted version must be updated to show hay bales/silt fencing continuing around the north east corner of the staging

area, as well as the location of the shoreline and MHW/MLW. Note #5 should include a time frame and description of the restoration activities for the site (ie: Within 6 months from the completion of excavation activities the area will be returned to the original grade. Any excavation shall be filled using clean natural fill.)

g. Figure 3A- Please provide a unique sheet number for this plan.

h. Sheet 67R (General Plan-Proposed Option 2) – All information provided by this plan appears to duplicate information more clearly provided on other plans, with the exception of BMP's. If this is the case, this plan may be omitted from the resubmission. However please be advised appropriate BMP's must be employed for the duration of the construction and dewatering activities. Best management practices such as the use of a floating boom/silt curtains, hay bales and silt fencing etc. must be employed where appropriate to minimize the impacts associated with cleanup and construction.

Stabilization Plans

i. Sheet 67R (Streambank Protection – Plan) – Please provide a unique sheet number for this plan. The plan should be revised to show the completed project conditions prior to the stabilization work, existing contours for both the north and south shorelines, location of MHW/MLW, limits for the stabilization activities, and lot boundaries. Any proposed changes to the toe of slope or location of MHW/MLW should be removed. In addition to this plan existing and proposed grading plans, and a photo plan for each area of stabilization must be submitted. Grading plans must show property boundaries and how the proposed stabilization will intersect with the bridge abutment and existing shoreline. Additional cross sections should be provided for each stabilization area. The proposed shoreline stabilization must result in a shoreline that is no further seaward that the existing shoreline. If a slope of 2:1 is desired, a design similar to that proposed by the plan entitled Stream Embankment 1, which pulls the shoreline landward should be considered.

ii. Stream Embankment 1- Please provide a unique sheet number for this plans. All notes which allow for deviation from the approved plans must be removed.

iii. Stream Embankment 2- Please provide a unique sheet number for this plan. The currently proposed design results in the placement of fill in both Littoral Zone and Adjacent Area. Please revise the design so that the proposed slope is no further seaward than the existing slope, resulting in a net fill of zero. Existing contours do not indicate a sidewalk/road. Does the current design propose the seaward relocation of the existing sidewalk/road?

iv. Stream Embankment 1 and 2- Additional detail are required for the rip-rap design. Please provide the following on all plans where rip-rap is proposed: size of the bedding stone and depth of the bedding layer, location of geotextile fabric proposed, minimum capstone size and depth of the capstone layer, size of the toe stone.

3. The NYSDEC Marine Resources Program has some concerns regarding the proposed method of containment for residual oil contamination within the project boundary. The proposed method of containment must be shown on revised sheets 88 and 83. The NYSDEC Spills requires that the following information be included on these plans so that it may be determined whether or not the proposed method of containment is adequate.

a. Thickness and type of liner proposed. The liner should be a minimum of 60 mils thick and manufacturer's specs should be attached.

b. Thickness and type of cushion layer above and below the liner. The thickness of the cushioning layers should be in accordance with the point loads over the liner. Clean sand would be a good material to be used for the cushioning layer.

c. The plans must clearly indicate how a "blow out" of the leading edge of the liner, where it meets the mud line of the Dutch Kills, will be prevented? If the liner should open up, then the pressure of the weight of the sediment may mobilize the residual oil. This oil will rise to the surface of the Dutch Kills and be an intermittent or continuous seep that will be difficult to stop.

4. Written permission from adjacent property owners for any work including the shoreline stabilization work completed on adjacent lots not owned by DOT must be provided. Possible affected properties are Queens County Block 112 Lot 1 and Queens County Block 68 Lot 9.

5. Through discussion with STV it has come to the NYSDEC's Marine Resources Program's attention that the in water work (ie. pile jacketing etc.) on the east bridge abutment is no longer proposed. All repairs proposed will take place landward of the east abutment. Please confirm that this is the case and provide a detailed description of the remaining work proposed to the east abutment.

Technical questions concerning this matter should be directed to Jesselynne Krief in the NYSDEC Bureau of Marine Resources at 718 482-6464. Administrative questions should be directed to the contact person listed below.

Please submit requested information by _____
No further action can be taken until all of these materials are received.

Signature:

Date: October 13, 2009

Contact Person:
TAMARA A GRECO
NYSDEC
47-40 21ST ST
LONG ISLAND CITY, NY 11101

Telephone Number: (718) 482-4997

N.Y.S. DEPARTMENT OF ENVIRONMENTAL CONSERVATION
NYSDEC REGION 2 HEADQUARTERS
47-40 21ST ST
LONG ISLAND CITY NY 11101
(718) 482-4997

SAVE THE TOP HALF OF THIS FORM FOR YOUR RECORDS AND RETURN THE BOTTOM HALF WHEN PROVIDING THE INFORMATION REQUESTED ON THE ACCOMPANYING **NOTICE OF INCOMPLETE APPLICATION.**

YOUR DOING SO WILL HELP US EXPEDITE YOUR PERMIT PROCESSING. THANK YOU.

DEC Contact:	TAMARA A GRECO
Batch ID:	614606
Application ID:	2-6304-01440/00004
Owner ID:	19237
Date Received:	06/01/2009
Date Incomplete:	10/13/2009
Application Type:	MOD
Applicant Name:	NYC DEPT OF TRANSPORTATION
Facility Name:	NYC DOT - BORDEN AVE BRIDGE
Project Desc:	Modification to dewatering operation

PLEASE PROVIDE REQUESTED INFORMATION ON OR BEFORE:

SAVE THIS PART !

DETACH

N.Y.S. DEPARTMENT OF ENVIRONMENTAL CONSERVATION

NYSDEC REGION 2 HEADQUARTERS

DEC Contact:	TAMARA A GRECO
Batch Id:	614606
Application Id:	2-6304-01440/00004
Owner Id:	19237
Date Received:	06/01/2009
Date Incomplete:	10/13/2009
Application Type:	MOD
Applicant Name:	NYC DEPT OF TRANSPORTATION
Facility name:	NYC DOT - BORDEN AVE BRIDGE
Project Desc:	Modification to dewatering operation
Information Due On Or Before:	

PLEASE ATTACH THIS HALF SO IT IS DISPLAYED PROMINENTLY ON YOUR RESUBMISSION

RETURN THIS PART !

RETURN THIS HALF OF THIS FORM WHEN PROVIDING THE INFORMATION REQUESTED ON THE ACCOMPANYING

NOTICE OF INCOMPLETE APPLICATION.

New York State Department of Environmental Conservation
Division of Environmental Permits, Region 2
47-40 21ST Street, Long Island City, NY 11101-5407
Phone: (718) 482-4997 • **FAX:** (718) 482-4975
Website: www.dec.state.ny.us

Alexander B. Grannis
Commissioner

November 19, 2009

Alan P. Marchan, P.E.
STV Incorporated
225 Park Avenue South
New York, NY 10003

Re: NYSDEC Permit No. 2-6304-01440/00004
NYC Dept. Of Transportation
Borden Avenue Bridge over Dutch Kills
Borden Avenue between 27th Street & Review Avenue
Queens, New York
6NYCRR Part 608 - Water Quality Certification
NYCRR Part 661 - Tidal Wetlands
ECL Article 15 - Protection of Waters
NOTICE OF PERMIT MODIFICATION

Dear Mr. Marchan:

In response to your request, please be advised that the above referenced permit has been modified to refelect dewatering methods. Your modified permit is attached.

If you have any technical questions concerning the permit please contact Jesselynne Krief in the NYSDEC Bureau of Marine Resources at 718 482-6464. Administrative questions should be directed to Tammy Greco in the NYSDEC Division of Environmental Permits at 718 482-4997.

Sincerely,

Harold J. Dickey
Deputy Regional Permit Administrator

cc: NYC Dept. Of Transportation
NYSDEC Marine Resources
NYSDEC Law Enforcement

NEW YORK STATE DEPARTMENT OF ENVIRONMENTAL CONSERVATION
Facility DEC ID 2-6304-01440

PERMIT

Under the Environmental Conservation Law (ECL)

Permittee and Facility Information

Permit Issued To:
NYC DEPT OF TRANSPORTATION
40 WORTH ST 11TH FL
NEW YORK, NY 10003
(212) 676-0557

Facility:
NYC DOT - BORDEN AVE BRIDGE
BORDEN AVE BTWN 25TH & 27TH ST
LONG ISLAND CITY, NY 11101

Facility Location: in QUEENS COUNTY **Village:** Long Island City
Facility Principal Reference Point: NYTM-E: 589.262 NYTM-N: 4510.311
Latitude: 41°44'20.1" Longitude: 74°56'34.1"
Project Location: Repair / replace west bridge abutment.
Authorized Activity: Repair / replace west bridge abutment.

Permit Authorizations

Tidal Wetlands - Under Article 25
Permit ID 2-6304-01440/00004

New Permit	Effective Date: 2/12/2009	Expiration Date: 12/31/2010
Modification # 1	Effective Date: 4/2/2009	Expiration Date: 12/31/2010
Modification # 2	Effective Date: 11/19/2009	Expiration Date: 12/31/2010

Water Quality Certification - Under Section 401 - Clean Water Act
Permit ID 2-6304-01440/00005

New Permit	Effective Date: 2/12/2009	Expiration Date: 12/31/2010
Modification # 1	Effective Date: 4/2/2009	Expiration Date: 12/31/2010
Modification # 2	Effective Date: 11/19/2009	Expiration Date: 12/31/2010

Excavation & Fill in Navigable Waters - Under Article 15, Title 5
Permit ID 2-6304-01440/00006

New Permit	Effective Date: 2/12/2009	Expiration Date: 12/31/2010
Modification # 1	Effective Date: 4/2/2009	Expiration Date: 12/31/2010
Modification # 2	Effective Date: 11/19/2009	Expiration Date: 12/31/2010

NYSDEC Approval

By acceptance of this permit, the permittee agrees that the permit is contingent upon strict compliance with the ECL, all applicable regulations, and all conditions included as part of this permit.

Permit Administrator: JOHN F CRYAN, Regional Permit Administrator
Address: NYSDEC REGION 2 HEADQUARTERS
47-40 21ST ST
LONG ISLAND CITY, NY 11101 -5407

Authorized Signature: _____ Date 11/19/09

Permit Components

NATURAL RESOURCE PERMIT CONDITIONS

WATER QUALITY CERTIFICATION SPECIFIC CONDITION

GENERAL CONDITIONS, APPLY TO ALL AUTHORIZED PERMITS

NOTIFICATION OF OTHER PERMITTEE OBLIGATIONS

NATURAL RESOURCE PERMIT CONDITIONS - Apply to the Following Permits: TIDAL WETLANDS; WATER QUALITY CERTIFICATION; EXCAVATION & FILL IN NAVIGABLE WATERS

1. **Conformance With Plans** All activities authorized by this permit must be in strict conformance with the approved plans submitted by the applicant or applicant's agent as part of the permit application. Such approved plans were prepared by STV Incorporated and Ground/Water Treatment & Technology for the City of New York Department of Transportation Division of Bridges.

2. **Conformance with Plans - Addenda** In addition to plans referenced in the Condition titled "Conformance with Plans," the activities authorized by this permit must be in strict conformance with the following approved plans and/or submissions made as part of the permit application:

a. Plans prepared by STV Incorporated for the City of New York Department of Transportation Division of Bridges contract no. HBQ1162E entitled: "Emergency Reconstruction of West Abutment and Wingwalls of Borden Avenue Bridge over Dutch Kills", SHEETS 8, 18, 67R, 71R, 72R, 75R, 78R, 82, 83, 88, 94R, 96, 97, 98, 99, and 103 dated Nov 20, 2009, received by NYS DEC on Nov 16, 2009.

The location of the Water treatment system and treatment system details must be consistent with the plans and information included in the CAP approved by DEC on August 31, 2009.

3. **Mitigation Plan** Permittee must provide a Mitigation Plan that allows for the removal of approximately 75 cubic yards of debris/material from the Dutch Kills shoreline as well as the stabilization of disturbed areas on either side of the replaced bridge abutment. The stabilization design must result in no increase of net fill in the waterway and a shoreline with a proposed slope no further seaward than the existing slope. Within ninety (90) days of permit issuance, the Permittee must submit for review and approval a proposed Mitigation Plan to NYSDEC Bureau of Marine Resources, 47-40 21st Street, Long Island City, New York 11101 (Attention: Jesse Krief). The Mitigation Plan must include a location, a detailed description of the project, and a time schedule for the mitigation project as well as permission from adjacent land owners for all work proposed on adjacent properties not owned by NYCDOT. The Mitigation Plan must be of sufficient detail and substance that it can be accepted by DEC with minimal revision. Within two (2) weeks of receiving comments to the proposed Mitigation Plan, Permittee must submit a revised proposed Mitigation Plan incorporating DEC's comments. Upon approval of the proposed Mitigation Plan Permittee must complete the Mitigation Plan pursuant to the

approved schedule or, if no schedule is approved, without delay. Permittee may contact Jesse Krief in the NYSDEC Bureau of Marine Resources at (718) 482-6464 with any questions concerning the Mitigation Plan.

4. **Removal of Temporary Structures** Within sixty (60) days of the completion of the abutment reconstruction activities all temporary structures installed to facilitate the reconstruction must be removed in their entirety. After removal is complete all areas must be restored to original grades using only clean/natural fill and stabilized. Temporary structures to be removed include the sediment staging area, the temporary flume, outfall pipe and baffle, temporary timber pontoon bridge and landings.

5. **HDPE Geomembrane Liner Requirements** Installation of a continuous 60 MIL HDPE geomembrane liner must be installed over all oil contaminated sediment within the cofferdam surrounding the bridge abutment, and on slopes that expose similarly oil contaminated sediment. A one (1) foot minimum cushioning layer must be installed on either side of the liner in order to prevent puncturing. All liner panels must be hot welded together with at least a six (6) inch overlap. All edges of the geomembrane panels adjacent to the bridge abutment must be sealed to the bridge abutment. All liner edges not adjacent to the abutment must be buried in an anchoring trench. Where space is limited and an anchoring trench is not possible liner edges must be left flat and carefully covered with backfill.

6. **Timber Fender Replacement** The replacement of the timber fender system is limited to areas where the fender existed prior to removal of the abutment and must be attached directly to the abutment face as shown on the project plans referenced in Natural Resources Permit Condition 2, specifically sheets 8, 18 and 94R.

7. **Notice of Intent to Commence Work** At least five (5) days prior to commencement of the permitted activity, Permittee must complete and submit the attached "Notice of Intent to Commence Work" to NYSDEC Bureau of Marine Resources, 47-40 21st Street, Long Island City, New York 11101 (Attention: Jesselynne Krief).

8. **Post Permit Sign** The permit sign enclosed with this permit shall be posted in a conspicuous location on the worksite and adequately protected from the weather.

9. **Post Construction Photographs** Within 30 days of the completion of work authorized by this permit, Permittee must provide post-construction photographs of the work area to: NYSDEC Bureau of Marine Resources, 47-40 21st Street, Long Island City, New York 11101 (Attention: Jesse Krief).

10. **Best Management Practices** Best management practices must be employed to prevent the loss of construction materials, debris, and sediment from entering the waterways. Such practices may include, but are not limited to silt fencing, hay bales, floating booms, and oil capture systems. At minimum a floating boom with attached silt curtain must be installed encircling the entire project site for both the preliminary inspection of the relieving platform and for the duration of the project.

11. **Precautions Against Contamination of Waters** All necessary precautions shall be taken to preclude contamination of any wetland or waterway by suspended solids, sediments, fuels, solvents, lubricants, epoxy coatings, paints, concrete, leachate or any other environmentally deleterious materials associated with the project.

12. **Discharge to Tidal Wetlands Prohibited** There must be no discharge of runoff or other effluent over or through any abutment wall or shoreline stabilization structure or into any tidal wetland or tidal wetlands adjacent area (unless specifically authorized by this permit).

13. **Water Treatment** All waters discharged into the Dutch Kills resulting from the dewatering activities associated with this project must first undergo treatment as described in the Corrective Action Plan approved by NYSDEC on August 31, 2009. The location of the treatment system must also remain consistent with the CAP. All effluent must be discharged into areas of the Dutch Kills with water depths greater than 4 feet at mean low water.

14. **Concrete/ Leachate Discharges Prohibited** During construction, concrete or leachate must not escape or be discharged. Washings from transit mix trucks, mixers, or other devices must not enter tidal wetlands and or protected buffer areas.

15. **Excavate Backfill Prior to Removal of Abutment** Prior to any construction or removal of the abutment and other shoreline stabilization structures all backfill must be excavated landward of the abutment and retained so as not to enter the waterway, tidal wetland or protected buffer area.

16. **Construct Abutment Prior to Fill Placement** Reconstruction or repair of the west abutment wall must be completed prior to placement of any fill material on either side of this structure.

17. **Installation of Cofferdam & Sheeting Protection Prior to Excavation** All cofferdams and protective sheeting functioning as the seaward project boundaries must be installed prior to excavation and removal of existing structures and fill immediately landward of such structures.

18. **Cofferdam Removal** Within (30) of the completion of the abutment wall reconstruction, all cofferdams, protective sheeting and associated bracing structures installed seaward of the abutment wall must be pulled in their entirety.

19. **No Weep Holes** The construction of weep holes in the abutment wall is strictly prohibited.

20. **Discharge of Effluent Obtained Through Excavation of Material** The effluent discharged from the water treatment system into the Dutch Kills Creek must not contain a visible contrast to the receiving water. If the effluent bears a substantial visible contrast to the receiving waters, discharging must cease and the water must be reintroduced back into the head of the treatment system until no visible contrast is seen.

21. **No Equipment Below High Water** Equipment operation below apparent high water is strictly prohibited.

22. **Dewatering** All sediment removed from within the excavation area must be dewatered within the confines of the concrete pad located in the sediment staging area shown on project plans referenced in Natural Resource Permit Condition 2. All effluent must be transported to and incorporated into the treatment system.

23. **Storage of Construction Equipment & Materials** The storage of construction equipment and materials must be confined to within the project work site and or upland areas greater than 35 linear feet from the tidal wetland boundary and outside the area of excavation.

24. **Disposal of Excavated Material** All dredged material must be retained so as to not re-enter any water body, tidal wetland, or protected buffer area and be disposed of at an upland site approved to accept petroleum contaminated sediments. Excavated sediments from within the cofferdam area must be placed directly into a conveyance vehicle for transportation to the stockpile area. The sidecasting (double dipping) or temporary storage of excavated material is prohibited.

25. **Prohibited Treated Wood** Use of wood treated with creosote is prohibited; Wood treated with Pentachlorophenol (PCP) must not be used in wetlands or surface waters. Standard pressure treated lumber with CCA and its use is permitted.

26. **Use of wood Preservatives** Pressure treated wood used for construction of in-water structures must have been treated with a preservative and must have undergone a treatment process approved (stamped or otherwise marked as certified) by the American Wood Preservative Association.

Chromated Copper Arsenate (CCA) pressure treated wood must be clean and free of CCA surface deposits. Wood with surface deposits must be washed for at least 5 minutes under running water prior to use. (Note the following condition for the handling of wash water.)

Any wood debris such as sawdust or wash water must not enter any water body, including wetlands, or protected buffer areas. Field application of CCA is strictly prohibited.

27. **Debris Removal** Should any demolition or construction debris fall into the waterway or enter the tidal wetlands, it must be removed immediately.

28. **Debris Disposal** Any debris or excess material from construction of this project will be completely removed from the adjacent area (upland) and removed to an approved upland area for disposal. No debris is permitted in tidal wetlands or tidal wetlands adjacent area or protected buffer areas. All demolition and construction debris must be properly disposed of at a licensed facility.

29. Clean Fill Material Only All fill material must consist of "clean" sand, gravel, or soil. The use of material such as asphalt, slag, fly-ash, recycled concrete aggregate (RCA), broken concrete, or demolition debris is strictly prohibited.

30. **Containment of Disturbed Soils** All disturbed areas where soil will be temporarily exposed or stockpiled for longer than one (1) week must be contained by a continuous line of staked hay bales/silt curtain (or other NYSDEC approved method) placed on the seaward side between the fill and wetland or protected buffer area. Tarps are authorized to supplement these approved methods.

31. **No Interference With Navigation** There shall be no unreasonable interference with navigation by the work herein authorized.

32. **Prior Approval of Changes** If the Permittee desires to make any changes in construction techniques, species to be planted, the site plan, any mitigation plan, scheduling or staging of construction, or any other aspect of this project, the Permittee shall submit a written request to the Regional Permit Administrator to make such proposed changes and shall not make such changes unless authorized in writing by the Department.

33. **Minimize Adverse Impacts to Wetlands, Wildlife, Water** All work must be performed in a manner which minimizes adverse impacts to wetlands, wildlife, water quality and natural resources.

34. **Failure to Meet Permit Conditions** Failure of the permittee to meet all the conditions of this permit is a violation of this permit and grounds for an order to immediately cease the permitted activity at the project site.

35. **State May Require Site Restoration** If upon the expiration or revocation of this permit, the project hereby authorized has not been completed, the applicant shall, without expense to the State, and to such extent and in such time and manner as the Department of Environmental Conservation may

require, remove all or any portion of the uncompleted structure or fill and restore the site to its former condition. No claim shall be made against the State of New York on account of any such removal or alteration.

36. **State May Order Removal or Alteration of Work** If future operations by the State of New York require an alteration in the position of the structure or work herein authorized, or if, in the opinion of the Department of Environmental Conservation it shall cause unreasonable obstruction to the free navigation of said waters or flood flows or endanger the health, safety or welfare of the people of the State, or cause loss or destruction of the natural resources of the State, the owner may be ordered by the Department to remove or alter the structural work, obstructions, or hazards caused thereby without expense to the State, and if, upon the expiration or revocation of this permit, the structure, fill, excavation, or other modification of the watercourse hereby authorized shall not be completed, the owners, shall, without expense to the State, and to such extent and in such time and manner as the Department of Environmental Conservation may require, remove all or any portion of the uncompleted structure or fill and restore to its former condition the navigable and flood capacity of the watercourse. No claim shall be made against the State of New York on account of any such removal or alteration.

37. **State Not Liable for Damage** The State of New York shall in no case be liable for any damage or injury to the structure or work herein authorized which may be caused by or result from future operations undertaken by the State for the conservation or improvement of navigation, or for other purposes, and no claim or right to compensation shall accrue from any such damage.

WATER QUALITY CERTIFICATION SPECIFIC CONDITIONS

1. **Water Quality Certification** The NYS Department of Environmental Conservation hereby certifies that the subject project will not contravene effluent limitations or other limitations or standards under Sections 301, 302, 303, 306 and 307 of the Clean Water Act of 1977 (PL 95-217) provided that all of the conditions listed herein are met.

GENERAL CONDITIONS - Apply to ALL Authorized Permits:

1. **Facility Inspection by The Department** The permitted site or facility, including relevant records, is subject to inspection at reasonable hours and intervals by an authorized representative of the Department of Environmental Conservation (the Department) to determine whether the permittee is complying with this permit and the ECL. Such representative may order the work suspended pursuant to ECL 71-0301 and SAPA 401(3).

The permittee shall provide a person to accompany the Department's representative during an inspection to the permit area when requested by the Department.

A copy of this permit, including all referenced maps, drawings and special conditions, must be available for inspection by the Department at all times at the project site or facility. Failure to produce a copy of the permit upon request by a Department representative is a violation of this permit.

2. **Relationship of this Permit to Other Department Orders and Determinations** Unless expressly provided for by the Department, issuance of this permit does not modify, supersede or rescind any order or determination previously issued by the Department or any of the terms, conditions or requirements

contained in such order or determination.

3. **Applications For Permit Renewals, Modifications or Transfers** The permittee must submit a separate written application to the Department for permit renewal, modification or transfer of this permit. Such application must include any forms or supplemental information the Department requires. Any renewal, modification or transfer granted by the Department must be in writing. Submission of applications for permit renewal, modification or transfer are to be submitted to:

Regional Permit Administrator
NYSDEC REGION 2 HEADQUARTERS
47-40 21ST ST
LONG ISLAND CITY, NY11101 -5407

4. **Submission of Renewal Application** The permittee must submit a renewal application at least 30 days before permit expiration for the following permit authorizations: Excavation & Fill in Navigable Waters, Tidal Wetlands, Water Quality Certification.

5. **Permit Modifications, Suspensions and Revocations by the Department** The Department reserves the right to modify, suspend or revoke this permit. The grounds for modification, suspension or revocation include:

a. materially false or inaccurate statements in the permit application or supporting papers;

b. failure by the permittee to comply with any terms or conditions of the permit;

c. exceeding the scope of the project as described in the permit application;

d. newly discovered material information or a material change in environmental conditions, relevant technology or applicable law or regulations since the issuance of the existing permit;

e. noncompliance with previously issued permit conditions, orders of the commissioner, any provisions of the Environmental Conservation Law or regulations of the Department related to the permitted activity.

6. **Permit Transfer** Permits are transferrable unless specifically prohibited by statute, regulation or another permit condition. Applications for permit transfer should be submitted prior to actual transfer of ownership.

NOTIFICATION OF OTHER PERMITTEE OBLIGATIONS

Item A: Permittee Accepts Legal Responsibility and Agrees to Indemnification
The permittee, excepting state or federal agencies, expressly agrees to indemnify and hold harmless the Department of Environmental Conservation of the State of New York, its representatives, employees, and agents ("DEC") for all claims, suits, actions, and damages, to the extent attributable to the permittee's acts or omissions in connection with the permittee's undertaking of activities in connection with, or operation and maintenance of, the facility or facilities authorized by the permit whether in compliance or not in compliance with the terms and conditions of the permit. This indemnification does not extend to any claims, suits, actions, or damages to the extent attributable to DEC's own negligent or intentional acts or omissions, or to any claims, suits, or actions naming the DEC and arising under

Article 78 of the New York Civil Practice Laws and Rules or any citizen suit or civil rights provision under federal or state laws.

Item B: Permittee's Contractors to Comply with Permit
The permittee is responsible for informing its independent contractors, employees, agents and assigns of their responsibility to comply with this permit, including all special conditions while acting as the permittee's agent with respect to the permitted activities, and such persons shall be subject to the same sanctions for violations of the Environmental Conservation Law as those prescribed for the permittee.

Item C: Permittee Responsible for Obtaining Other Required Permits
The permittee is responsible for obtaining any other permits, approvals, lands, easements and rights-of-way that may be required to carry out the activities that are authorized by this permit.

Item D: No Right to Trespass or Interfere with Riparian Rights
This permit does not convey to the permittee any right to trespass upon the lands or interfere with the riparian rights of others in order to perform the permitted work nor does it authorize the impairment of any rights, title, or interest in real or personal property held or vested in a person not a party to the permit.

NOTICE OF INTENT TO COMMENCE WORK

Date: _____

NYSDEC Marine Resources
Attn. Jesse Krief
N.Y.S.D.E.C Region 2 Office
47-40 21st Street
Long Island City, N.Y. 11101

Re: NYSDEC Permit No. 2-6304-01440/00004
NYC Dept. Of Transportation
Borden Avenue bridge over Dutch Kills
Borden Avenue between 27th Street & Review Avenue
Queens, New York

Dear Ms. Krief:

In accordance with Natural Resource Condition 7 of the referenced permit, I hereby serve notice to commence work on _____, 200____.

This is also to certify that, having read this entire permit, I am fully aware of and understand the general and special conditions therein, and agree to comply with all such conditions. I further understand that prior to undertaking any modification to the subject work, I must seek and receive written approval of the NYSDEC Regional Permit Administrator.

_____
Signature of Permittee

_____
Name of Permittee (please print)

_____
Signature of Contractor

_____
Name of Contractor (please print)

_____
Street Address of Contractor

_____
City, State, & Zip Code of Contractor

_____
Telephone Number of Contractor

WARNING

The permittee and his contractor (if any) are required to follow all permit conditions. Violations of the permit may lead to legal action, including the imposition of substantial monetary fines and corrective work.

cc: NYSDEC Environmental Permits

95-20-1 (11/03) –9d

New York State
Department of Environmental Conservation

NOTICE

The Department of Environmental Conservation (DEC) has issued permit(s) pursuant to the Environmental Conservation Law for work being conducted at this site. For further information regarding the nature and extent of the approved work and any Department conditions applied to the approval, contact the Regional Permit Administrator listed below. Please refer to the permit number shown when contacting the DEC.

Permit Number 2-6302-01440/00004

Expiration Date December 31, 2010

Regional Permit Administrator

John F. Cryan
47-40 21st Street
Long Island City, New York 11101
(718) 482-4997

NOTE: This notice is NOT a permit

STV

December 7, 2009

Mr. Selvin T. Southwell, P.E
NYS Department of Environmental Conservation
47-40 21st Street
Long Island City, New York 11101

Reference: Emergency Reconstruction of West Abutment and Wingwalls Borden Avenue Bridge over Dutch Kills

Subject: Discharge Monitoring Plan
NYSDEC Permit No. 2-6304-01440/00004

Dear Mr. Southwell:

The New York City Department of Transportation (NYCDOT) is preparing to resume construction and repair activities at the Borden Avenue Bridge site. As you know, the project was placed on hold after the discovery of petroleum-impacted sediment during dewatering and excavation activities on the western side of the Dutch Kills.

The purpose of this letter is to serve as a Discharge Monitoring Plan to provide guidance in monitoring treated effluent at the above-referenced project site prior to discharge to the Dutch Kills.

Background

As a result of the discovery of petroleum-impacted sediment, Moretrench, under subcontract to Maracap, developed a Water Treatment Plan (dated July 23, 2009) as part of a Corrective Action Plan (CAP) which addresses the treatment of impacted groundwater from within the cofferdam and collected run off from the wet sediment stockpiles. The treatment design is based upon the water sampling data that was obtained by the project team on June 19, 2009. The groundwater table will be lowered and withdrawn from the cofferdam through a series of permitted wells from within the confines of the cofferdam and treated on site through a designed water treatment system prior to discharge to the Dutch Kills. The information provided in the CAP meets the SPDES Permit Equivalent Application Requirements for Remediation Discharges to Surface or Groundwaters.

The CAP was approved by the NYSDEC Bureau of Spill Prevention and Response and the Division of Water Resources on August 31, 2009. Subsequently, a Stipulation Agreement was issued by the NYSDEC which outlined the terms of the corrective action. Condition 4 of the Corrective Action Plan as contained in the Stipulation Agreement requires that all water collected as part of the construction activities and which will be discharged to the Dutch Kills, must not exceed the allowable contaminant limits as set forth in Table 2 - Wastewater Limits for Surface Water Discharges (see attached).

Discharge Monitoring

The estimated duration for the effluent discharge is three months. The first day of discharge is projected to be December 10, 2009.

225 PARK AVENUE SOUTH
NEW YORK, NEW YORK 10003-1604
(212) 777-4400 FAX: (212) 529-6237

The water treatment system will be operated and maintained by Maracap with technical assistance provided by Moretrench. The total discharge volume, average pump rate, and times of pump operation will be documented daily. The flow meters will be equipped with totalizers which measure the cumulative flow through a meter. Standby power and standby vacuum pump will be onsite and maintained in proper working order.

NYCDOT proposes a grab water sample be collected on a **weekly** basis (Monday mornings) from between the two (lead and lag) carbon adsorption units of the treatment system as shown on the attached treatment system plan.

The samples will be collected by Environmental Planning & Management (EPM) under subcontract to the NYCDOT. The weekly sample will be analyzed by a NYS accredited and certified laboratory for the parameters identified in Table 2 (attached) of the Stipulation Agreement. If any of the parameters for volatile organic compounds exceed the discharge limits established by NYSDEC, a repeat sample will be collected from the discharge of the lag carbon adsorption unit for analysis. In accordance with the Water Treatment Plan, if a repeat exceedance occurs from the lag carbon absorber the spent carbon will be removed and replaced with 10,000 pounds of reactivated carbon media. The results of the weekly monitoring sample will be submitted to the NYSDEC.

Weekly sampling and analysis will continue through the excavation phase of the project and the placement of the geomembrane at the base of the cofferdam. After the geomembrane is secured, the sampling and analysis for the Table 2 parameters will continue on a monthly basis until dewatering and treatment discharge to the Dutch Kills ceases.

In addition, the pH will be measured daily by the treatment system operator in accordance with the standards set forth in Table 2. If there is an exceedance of the pH range the contractor will perform repeat readings. If the pH readings continue to exceed the standards the contractor will install automatic pH adjustment devices into the Water Treatment Plant.

If there are any questions or comments to this Discharge Monitoring Plan, please contact me at your earliest convenience at 212-614-3412 or donald.hessemer@stvinc.com.

Sincerely,
STV, Incorporated

Donald P. Hessemer

Donald P. Hessemer
Senior Project Manager

Attachments: Table 2 – Wastewater Limits for Surface Water Discharges
Temporary Water Treatment System Schematic

cc: C. Chakrabarti - NYSDEC
S. Watts – NYSDEC
R. Ketani - NYSDEC

B. Duran - NYCDOT
R. Lofti – NYCDOT
J. Kurre - NYCDOT
H. Palmer - Haks
J. Aitken - Maracap
P. Casazza - Maracap
A. Marchan - STV
M. Tumulty - STV
T. Maguire - Moretrench

TABLE 2
Wastewater Limits For Surface Water Discharges

COMPOUND	GASOLINE	FUEL OIL
pH range	6.5 - 8.5	6.5 - 8.5
Benzene[1]	7 ug/l	7 ug/l
Ethylbenzene	5 ug/l	5 ug/l
Toluene	5 ug/l	5 ug/l
o-Xylene	5 ug/l	5 ug/l
m-Xylene	5 ug/l	5 ug/l
p-Xylene	5 ug/l	5 ug/l
Mixed xylenes	5 ug/l	5 ug/l
Naphthalene	10 ug/l	10 ug/l
MTBE	10 ug/l	10 ug/l

N A = not applicable

[1] The benzene limits for discharge to Class A surface waters are applicable for water bodies capable of 7:1 dilution ratio of base flow to discharge flow. The Division of Water may be consulted for assistance as needed

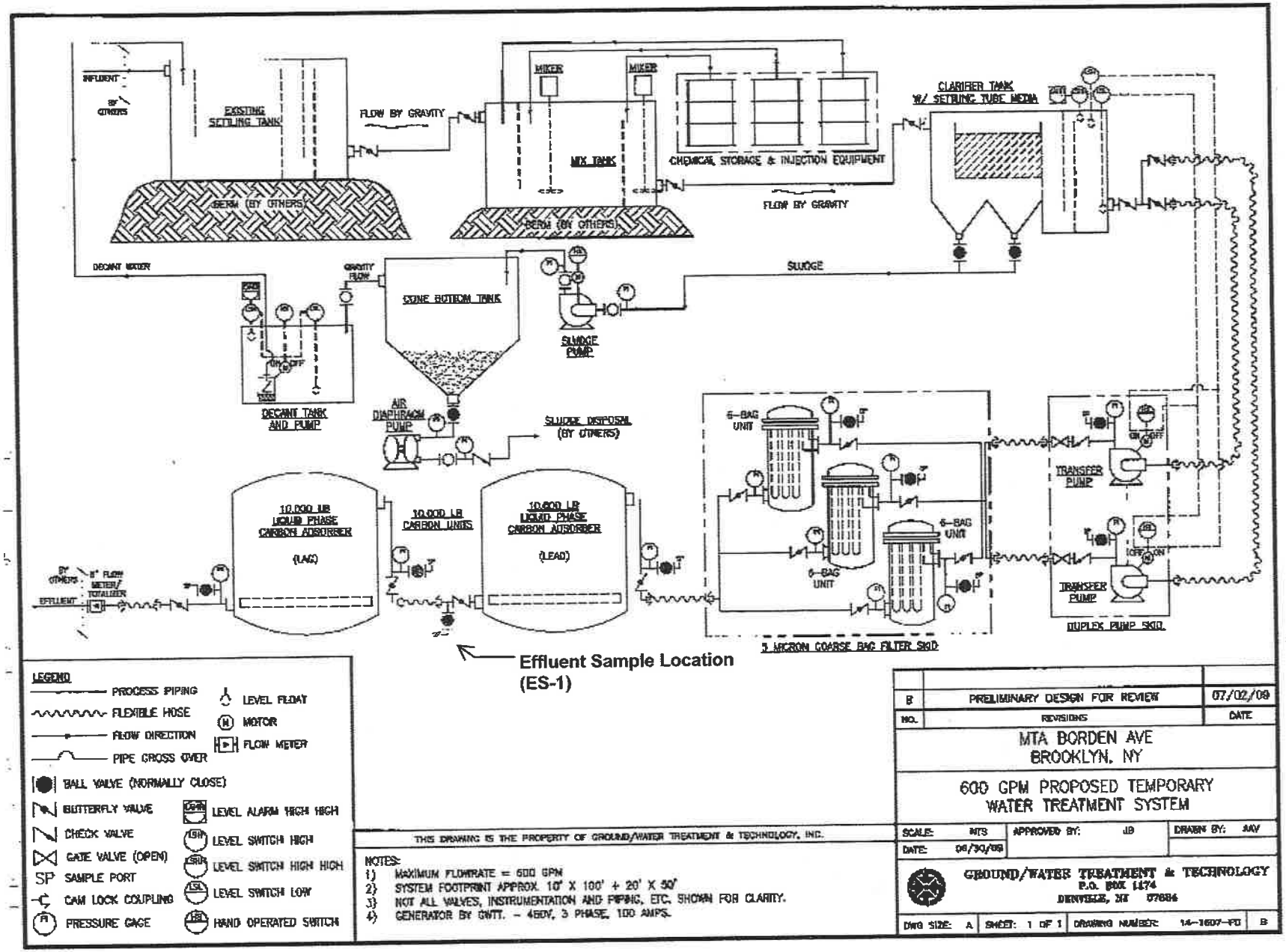
INFLUENT
BY OTHERS
EXISTING SETTLING TANK
BERM (BY OTHERS)
FLOW BY GRAVITY
MIXER
MIXER
MIX TANK
CHEMICAL STORAGE & INJECTION EQUIPMENT
BERM (BY OTHERS)
FLOW BY GRAVITY
CLARIFIER TANK W/ SETTLING TUBE MEDIA
DECANT WATER
GRAVITY FLOW
CONE BOTTOM TANK
SLUDGE
SLUDGE PUMP
DECANT TANK AND PUMP
AIR DIAPHRAGM PUMP
SLUDGE DISPOSAL (BY OTHERS)
10,000 LB LIQUID PHASE CARBON ADSORBER (LAG)
10,000 LB CARBON UNITS
10,000 LB LIQUID PHASE CARBON ADSORBER (LEAD)
BY OTHERS
6" FLOW METER/ TOTALIZER
EFFLUENT
5-BAG UNIT
5-BAG UNIT
5-BAG UNIT
5 MICRON COARSE BAG FILTER SKID
TRANSFER PUMP
TRANSFER PUMP
DUPLEX PUMP SKID
Effluent Sample Location (ES-1)
LEGEND
PROCESS PIPING
FLEXIBLE HOSE
FLOW DIRECTION
PIPE CROSS OVER
BALL VALVE (NORMALLY CLOSE)
BUTTERFLY VALVE
CHECK VALVE
GATE VALVE (OPEN)
SP SAMPLE PORT
CAM LOCK COUPLING
PRESSURE GAGE
LEVEL FLOAT
MOTOR
FLOW METER
LEVEL ALARM HIGH HIGH
LEVEL SWITCH HIGH
LEVEL SWITCH HIGH HIGH
LEVEL SWITCH LOW
HAND OPERATED SWITCH
THIS DRAWING IS THE PROPERTY OF GROUND/WATER TREATMENT & TECHNOLOGY, INC.
NOTES:
1) MAXIMUM FLOWRATE = 600 GPM
2) SYSTEM FOOTPRINT APPROX. 10' X 100' + 20' X 50'
3) NOT ALL VALVES, INSTRUMENTATION AND PIPING, ETC. SHOWN FOR CLARITY.
4) GENERATOR BY CWTT. - 480V, 3 PHASE, 100 AMPS.
B PRELIMINARY DESIGN FOR REVIEW 07/02/09
NO. REVISIONS DATE
MTA BORDEN AVE
BROOKLYN, NY
600 GPM PROPOSED TEMPORARY WATER TREATMENT SYSTEM
SCALE: NTS
APPROVED BY: JB
DRAWN BY: JMV
DATE: 06/30/09
GROUND/WATER TREATMENT & TECHNOLOGY
P.O. BOX 1174
DENVILLE, NJ 07834
DWG SIZE: A
SHEET: 1 OF 1
DRAWING NUMBER: 14-1607-PD
B

STV

December 11 2009

Mr. Rafael Ketani, MS, CPG
NYS Department of Environmental Conservation
Hunters Point Plaza
47-40 21st Street
Long Island City, New York, NY 11101-5401

Reference: Emergency Reconstruction of West Abutment and Wingwalls
Borden Avenue Bridge over Dutch Kills
Corrective Action Plan

Dear Mr. Ketani:

This letter provides notification that the dewatering operations at the project were started yesterday. A water sample was collected from the sampling port between the two carbon units and sent for expedited laboratory analyses of the parameters stipulated in the approved Corrective Action Plan (CAP). Field measurements of pH indicate that the effluent is exceeding the 8.5 threshold stipulated in the approved CAP. Measurements taken yesterday and today indicate pH varied between 8.38 and 9.1. As per our letter of December 7, 2009 regarding the discharge monitoring plan and pH exceedances the contractor is taking corrective action by installing a pH adjustment unit to the treatment system today. We will keep you informed as these activities proceed and the effectiveness of pH adjustment unit. Please contact us with any questions or comments.

Sincerely,
STV Incorporated

Donald P. Hessemer

Donald P. Hessemer
Senior Project Manager

cc: Beatrice Duran, NYCDOT
John Kurre, NYCDOT
Harold Palmer, HAKS
Alan Marchan, STV
Selvin Southwell, NYSDEC

225 PARK AVENUE SOUTH
NEW YORK, NEW YORK 10003-1604
(212) 777-4400 FAX: (212) 529-5237

STV

January 7, 2010

Mr. Rafael Ketani, MS, CPG
NYS Department of Environmental Conservation
Hunters Point Plaza
47-40 21st Street
Long Island City, New York, NY 11101-5401

Reference: Emergency Reconstruction of West Abutment and Wingwalls
Borden Avenue Bridge over Dutch Kills
Corrective Action Plan Addendum Request

Dear Mr. Ketani:

On behalf of the New York City Department of Transportation, (NYCDOT), this letter serves to request approval of modifications to the Sediment Staging Area for the above-referenced project. The Sediment Staging Area was previously approved by the New York State Department of Environmental Conservation (NYSDEC) as part of an Amended Corrective Action Plan (CAP) on August 31, 2009.

Figures 3 and 3A (attached) provide the current design drawing of the Sediment Staging Area contained in the CAP. The attached Drawing S-558R depicts a proposed expansion of the Sediment Staging Area that will allow greater capacity for sediment handling and drying as well as increase in excavation productivity. Currently, the Contractor is unable to excavate during a night-shift due to a lack of staging area space. The proposed expansion will accelerate the rate of excavation and sediment disposal and thereby improve the efficiency of the project.

We understand that upon approval of this CAP Amendment, it will become incorporated by reference to the Stipulation Agreement between NYSDEC and NYCDOT.

Please contact us if you have any questions or comments

Sincerely,
STV Incorporated

Donald P. Hessemer

Donald P. Hessemer
Senior Project Manager

cc: Jesse Krief, NYSDEC
Beatrice Duran, NYCDOT
John Kurre, NYCDOT
Harold Palmer, HAKS
Alan Marchan, STV

Attachments: Figure 3 – Temporary Sediment Staging Area
Figure 3A – Temporary Sediment Staging Area, Sheet 2
Drawling S-558R – Proposed Sediment Staging Area Expansion

AN EMPLOYEE-OWNED COMPANY PROVIDING QUALITY SERVICE SINCE 1912 | 225 PARK AVENUE SOUTH
NEW YORK, NEW YORK 10003-1604
(212) 777-4400 FAX: (212) 629-5237

STV

January 11, 2010

Mr. John Cryan
NYS Department of Environmental Conservation
Division of Environmental Permits, Region 2
47-40 21st Street
Long Island City
New York, NY 11101

Reference: **Emergency Reconstruction of West Abutment and Wingwalls Borden Avenue Bridge over Dutch Kills, NYCDOT Contract HBQ1162E**
NYSDEC Permit ID-2-6304-01440/00004/00005/00006

Subject: **Request for Permit Modification**

Dear Mr. Cryan:

On behalf of the NYC Department of Transportation (NYCDOT), STV Inc. requests that the above referenced permits be modified. The permits were initially approved on February 12, 2009 with subsequent Notices of Permit Modification issued on April 2, 2009 and November 19, 2009.

This request for permit modification is to formally propose modifications to the project's Sediment Staging Area which is being used to stage and dry excavated petroleum-impacted sediment prior to off-site disposal. Please note that the engineering details of this Staging Area were previously submitted to the NYSDEC Spills Division in a Corrective Action Plan (CAP) to address Spill Case No. 0903437 at the site. An amended CAP was approved by the NYSDEC Division of Marine Resources and the Bureau of Spill Prevention Response on August 31, 2009.

The attached Drawings S-558 and S-559 provide the current design drawing of the Sediment Staging Area approved in the November 19, 2009 Permit Modification and August 31, 2009 Amended CAP approval. The attached Drawing S-558 (Revision) depicts a proposed expansion of the Sediment Staging Area that will allow greater capacity for sediment handling and drying as well as increase in excavation productivity. Currently, the Contractor is unable to excavate during a night-shift due to a lack of staging area space. The proposed expansion will accelerate the rate of excavation and sediment disposal and thereby improve the efficiency of the project. A formal request to modify the CAP has been submitted to Mr. Raphael Ketani of the NYSDEC Spills Division under separate cover in a letter dated January 7, 2010.

We trust this information sufficiently supports our request for permit modification. A check in the amount of $200 is attached as application fee for this permit modification request. If you have any questions or additional comments, please contact Mr. Donald Hessemer or Mr. Alan Marchan at 212-777-4400.

Sincerely,
STV, Incorporated

Donald P. Hessemer
Environmental Project Manager

Alan P. Marchan, P.E.
Project Manager

225 PARK AVENUE SOUTH
NEW YORK, NEW YORK
(212) 777-4400 FAX: (2

cc: Jesselynne Krief, NYSDEC, Bureau of Marine Services
Harold Dickey, NYSDEC, Division of Environmental Permits
Raphael Ketani, NYSDEC Bureau of Spill Prevention and Response
George Klein, NYCDOT
Kedari Reddy, NYCDOT
Beatriz Duran, NYCDOT
John Kurre, NYCDOT

Attachments: Drawing S-558 Temporary Sediment Staging Area Sheet 1 of 2
Drawing S-559 Temporary Sediment Staging Area Sheet 2 of 2
Drawing S-558 **(Revised)** Temporary Sediment Staging Area Sheet 1 of 2
Permit Modification Application Fee - $200

FED. RD. REG. NO.	STATE	FEDERAL AID PROJECT NO.	SHEET NO.	TOTAL SHEETS
	NEW YORK			XXX

EMERGENCY RECONSTRUCTION OF WEST ABUTMENT AND WINGWALLS OF BORDEN AVENUE BRIDGE OVER DUTCH KILLS

P.I.N. 84197MB983BR	QUEENS	B.I.N. 2-24041-0

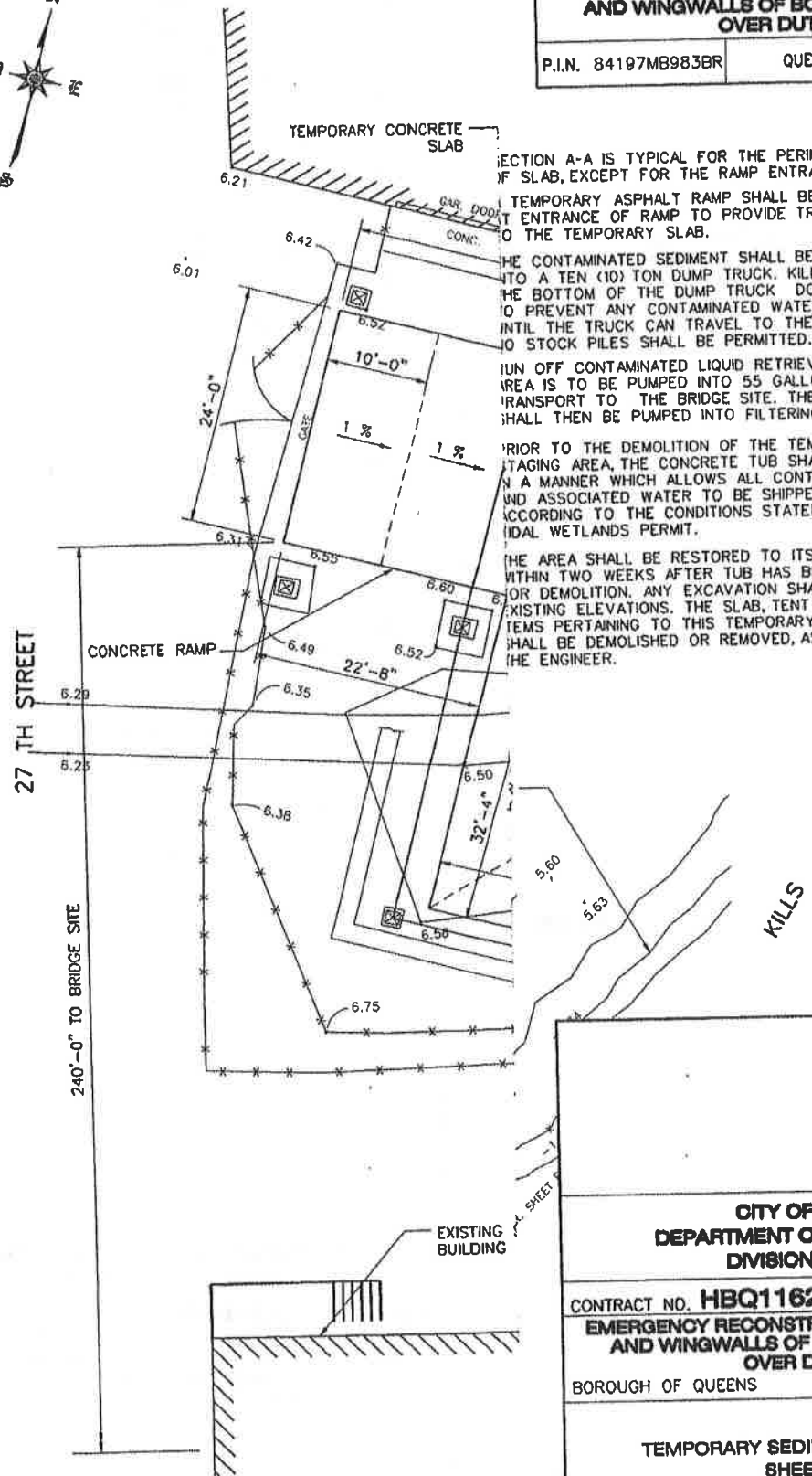

ECTION A-A IS TYPICAL FOR THE PERIMETER
F SLAB, EXCEPT FOR THE RAMP ENTRANCE.

TEMPORARY ASPHALT RAMP SHALL BE PROVIDED
T ENTRANCE OF RAMP TO PROVIDE TRUCK ACCESS
O THE TEMPORARY SLAB.

HE CONTAMINATED SEDIMENT SHALL BE LOADED DIRECTLY
NTO A TEN (10) TON DUMP TRUCK. KILN DUST WILL BE PLACED AT
HE BOTTOM OF THE DUMP TRUCK DOOR PRIOR TO LOADING
O PREVENT ANY CONTAMINATED WATER FROM LEAKING
NTIL THE TRUCK CAN TRAVEL TO THE STORAGE AREA
O STOCK PILES SHALL BE PERMITTED.

UN OFF CONTAMINATED LIQUID RETRIEVED IN STAGING
REA IS TO BE PUMPED INTO 55 GALLON DRUMS FOR TRUCK
RANSPORT TO THE BRIDGE SITE. THE 55 GALLON DRUMS
SHALL THEN BE PUMPED INTO FILTERING SYSTEM.

RIOR TO THE DEMOLITION OF THE TEMPORARY
TAGING AREA, THE CONCRETE TUB SHALL BE CLEANED
N A MANNER WHICH ALLOWS ALL CONTAMINATED SOIL
ND ASSOCIATED WATER TO BE SHIPPED OR TREATED
CCORDING TO THE CONDITIONS STATED UNDER THE
IDAL WETLANDS PERMIT.

HE AREA SHALL BE RESTORED TO ITS EXISTING CONDITION
ITHIN TWO WEEKS AFTER TUB HAS BEEN PREPARED
OR DEMOLITION. ANY EXCAVATION SHALL BE FILLED TO ITS
XISTING ELEVATIONS. THE SLAB, TENT AND ANY OTHER
TEMS PERTAINING TO THIS TEMPORARY STAGING AREA
SHALL BE DEMOLISHED OR REMOVED, AS DIRECTED BY
HE ENGINEER.

CITY OF NEW YORK
DEPARTMENT OF TRANSPORTATION
DIVISION OF BRIDGES

CONTRACT NO. **HBQ1162E**

EMERGENCY RECONSTRUCTION OF WEST ABUTMENT AND WINGWALLS OF BORDEN AVENUE BRIDGE OVER DUTCH KILLS

BOROUGH OF QUEENS B.I.N. 2-24041-0

TEMPORARY SEDIMENT STAGING AREA
SHEET 1 OF 2

DWG. NO.	SCALE	DATE	SHEET
S-558	AS NOTED	11/20/09	98

STV Incorporated
architects/engineers/planners/interior designers
225 Park Avenue South, New York, NY 10003

1/8"=1'-0"

11/16/2009\\Projects\0201605\0201605_0001\70_Technical Documents Reports\73_Technical Reports\1605\Borden\Emergency Work\NY 03-09-09\Other Dwgs\Permit Drawings\S-558.dgn

FED. RD. REG. NO.	STATE	FEDERAL AID PROJECT NO.	SHEET NO.	TOTAL SHEETS
	NEW YORK			XXX

EMERGENCY RECONSTRUCTION OF WEST ABUTMENT AND WINGWALLS OF BORDEN AVENUE BRIDGE OVER DUTCH KILLS

P.I.N. 84197MB983BR	QUEENS	B.I.N. 2-24041-0

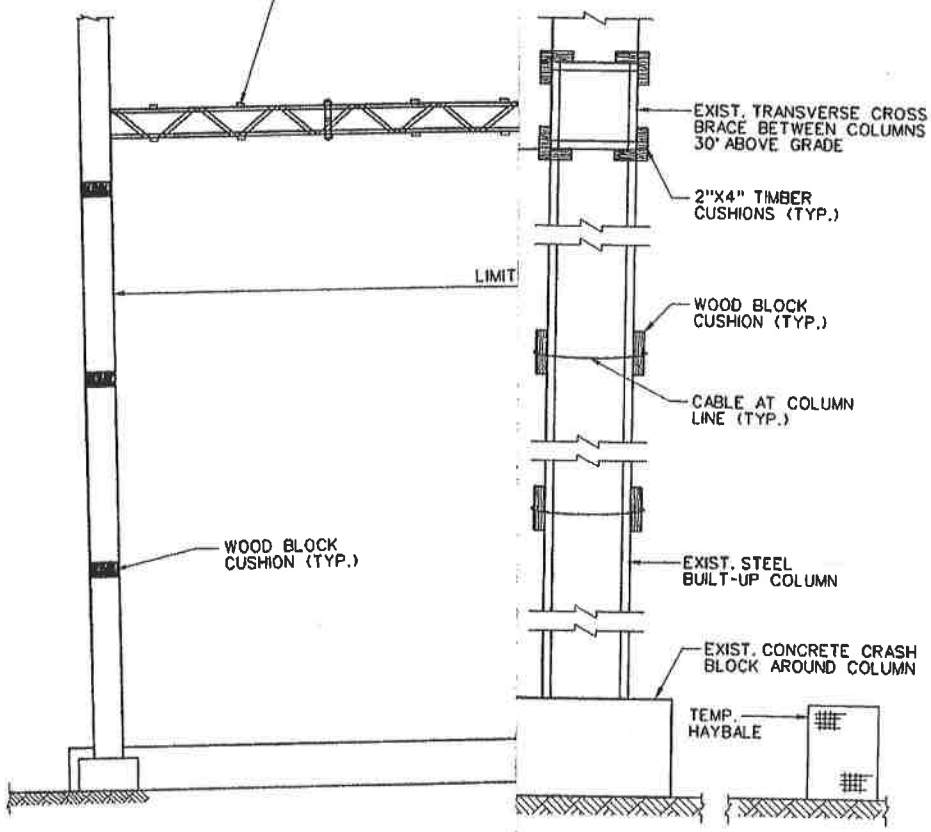

TYPICAL BE CAL BENT CROSS SECTION

SCALE: 3/4"=1'-0"

CITY OF NEW YORK
DEPARTMENT OF TRANSPORTATION
DIVISION OF BRIDGES

CONTRACT NO. **HBQ1162E**

EMERGENCY RECONSTRUCTION OF WEST ABUTMENT AND WINGWALLS OF BORDEN AVENUE BRIDGE OVER DUTCH KILLS

BOROUGH OF QUEENS B.I.N. 2-24041-0

TEMPORARY SEDIMENT STAGING AREA
SHEET 2 OF 2

DWG. NO.	SCALE	DATE	SHEET
S-559	AS NOTED	11/20/09	99

STV Incorporated
architects/engineers/planners/interior designers
225 Park Avenue South, New York, NY 10003

11/16/2009 L:\Projects\Q201606\Q201606_0001\70_Technical Documents Reports\73_Technical Reports\1606\Borden\Emergency Work\NY 03-09-09\Other Dwgs\Permit Drawings\S-559.dgn

FED. RD. REG. NO.	STATE	FEDERAL AID PROJECT NO.	SHEET NO.	TOTAL SHEETS
	NEW YORK			XXX

EMERGENCY RECONSTRUCTION OF WEST ABUTMENT AND WINGWALLS OF BORDEN AVENUE BRIDGE OVER DUTCH KILLS

P.I.N. 84197MB983BR	QUEENS	B.I.N. 2-24041-0

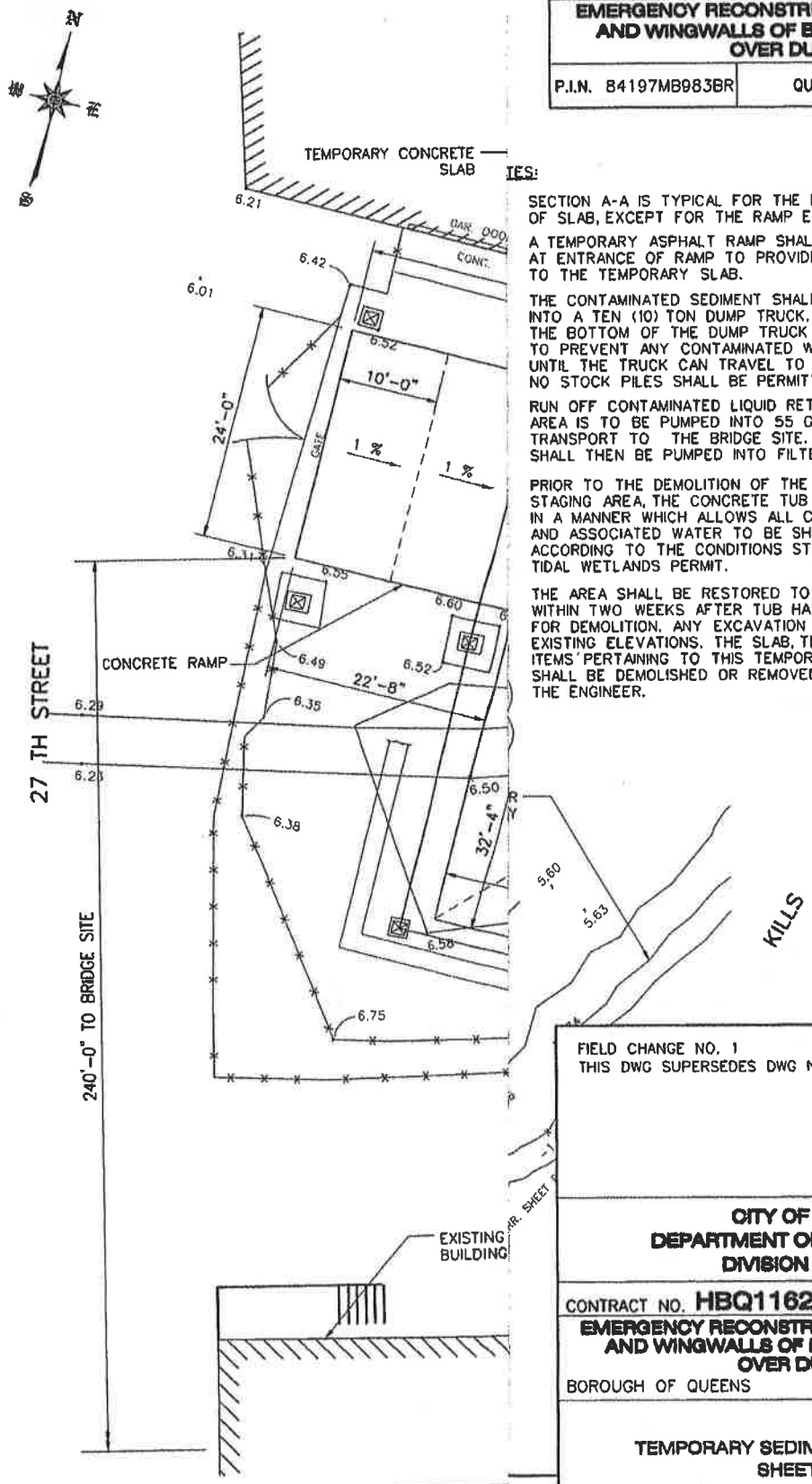

IES:

SECTION A-A IS TYPICAL FOR THE PERIMETER OF SLAB, EXCEPT FOR THE RAMP ENTRANCE.

A TEMPORARY ASPHALT RAMP SHALL BE PROVIDED AT ENTRANCE OF RAMP TO PROVIDE TRUCK ACCESS TO THE TEMPORARY SLAB.

THE CONTAMINATED SEDIMENT SHALL BE LOADED DIRECTLY INTO A TEN (10) TON DUMP TRUCK. KILN DUST WILL BE PLACED AT THE BOTTOM OF THE DUMP TRUCK DOOR PRIOR TO LOADING TO PREVENT ANY CONTAMINATED WATER FROM LEAKING UNTIL THE TRUCK CAN TRAVEL TO THE STORAGE AREA NO STOCK PILES SHALL BE PERMITTED.

RUN OFF CONTAMINATED LIQUID RETRIEVED IN STAGING AREA IS TO BE PUMPED INTO 55 GALLON DRUMS FOR TRUCK TRANSPORT TO THE BRIDGE SITE. THE 55 GALLON DRUMS SHALL THEN BE PUMPED INTO FILTERING SYSTEM.

PRIOR TO THE DEMOLITION OF THE TEMPORARY STAGING AREA, THE CONCRETE TUB SHALL BE CLEANED IN A MANNER WHICH ALLOWS ALL CONTAMINATED SOIL AND ASSOCIATED WATER TO BE SHIPPED OR TREATED ACCORDING TO THE CONDITIONS STATED UNDER THE TIDAL WETLANDS PERMIT.

THE AREA SHALL BE RESTORED TO ITS EXISTING CONDITION WITHIN TWO WEEKS AFTER TUB HAS BEEN PREPARED FOR DEMOLITION. ANY EXCAVATION SHALL BE FILLED TO ITS EXISTING ELEVATIONS. THE SLAB, TENT AND ANY OTHER ITEMS PERTAINING TO THIS TEMPORARY STAGING AREA SHALL BE DEMOLISHED OR REMOVED, AS DIRECTED BY THE ENGINEER.

FIELD CHANGE NO. 1 [1]
THIS DWG SUPERSEDES DWG NO. S-558 (12/29/09)

CITY OF NEW YORK
DEPARTMENT OF TRANSPORTATION
DIVISION OF BRIDGES

CONTRACT NO. **HBQ1162E**

EMERGENCY RECONSTRUCTION OF WEST ABUTMENT AND WINGWALLS OF BORDEN AVENUE BRIDGE OVER DUTCH KILLS

BOROUGH OF QUEENS B.I.N. 2-24041-0

TEMPORARY SEDIMENT STAGING AREA
SHEET 1 OF 2

DWG. NO. [1]	SCALE	DATE [1]	SHEET
S-558R	AS NOTED	12/29/09	98

STV Incorporated
architects/engineers/planners/interior designers
225 Park Avenue South, New York, NY 10003

1/8"=1'-0"

1/7/2010 K:\Projects\0201605\0201605_0001\70_Technical Documents Reports\73_Technical Reports\1606\Borden\Emergency Work\NY 03-09-09\Other Dwgs\Permit Drawings\S-558(Revised).dgn

New York State Department of Environmental Conservation
Division of Environmental Permits, Region 2
47-40 21ST Street, Long Island City, NY 11101-5407
Phone: (718) 482-4997 • **FAX:** (718) 482-4975
Website: www.dec.state.ny.us

Alexander B. Grannis
Commissioner

January 26, 2010

Donald P. Hessemer
STV Incorporated
225 Park Avenue South
New York, NY 10003

Re: NYSDEC Permit No. 2-6304-01440/00004
NYC Dept. Of Transportation
Borden Avenue Bridge over Dutch Kills
Borden Avenue between 27th Street & Review Avenue
Queens, New York
6NYCRR Part 608 - Water Quality Certification
NYCRR Part 661 - Tidal Wetlands
ECL Article 15 - Protection of Waters
NOTICE OF PERMIT MODIFICATION

Dear Mr. Hessemer:

In response to your request, please be advised that the above referenced permit has been modified to authorize changes to the project's Sediment Staging Area. Your modified permit is attached. Please read it carefully. Compliance with all permit conditions is required.

If you have any technical questions concerning the permit please contact Jesselynne Krief in the NYSDEC Bureau of Marine Resources at 718 482-6464. Administrative questions should be directed to Tammy Greco in the NYSDEC Division of Environmental Permits at 718 482-4997.

Sincerely,

Harold J. Dickey
Deputy Regional Permit Administrator

cc: NYC Dept. Of Transportation
NYSDEC Marine Resources
NYSDEC Law Enforcement

NEW YORK STATE DEPARTMENT OF ENVIRONMENTAL CONSERVATION
Facility DEC ID 2-6304-01440

PERMIT

Under the Environmental Conservation Law (ECL)

Permittee and Facility Information

Permit Issued To:
NYC DEPT OF TRANSPORTATION
40 WORTH ST 11TH FL
NEW YORK, NY 10003
(212) 676-0557

Facility:
NYC DOT - BORDEN AVE BRIDGE
BORDEN AVE BTWN 25TH & 27TH ST
LONG ISLAND CITY, NY 11101

Facility Location: in QUEENS COUNTY **Village:** Long Island City
Facility Principal Reference Point: NYTM-E: 589.262 NYTM-N: 4510.311
Latitude: 41°44'20.1" Longitude: 74°56'34.1"
Project Location: West Bridge Abutment
Authorized Activity: Repair / replace west bridge abutment.

Permit Authorizations

Tidal Wetlands - Under Article 25
Permit ID 2-6304-01440/00004

New Permit	Effective Date: 2/12/2009	Expiration Date: 12/31/2010
Modification # 1	Effective Date: 4/2/2009	Expiration Date: 12/31/2010
Modification # 2	Effective Date: 11/19/2009	Expiration Date: 12/31/2010
Modification # 3	Effective Date: 1/26/2010	Expiration Date: 12/31/2010

Water Quality Certification - Under Section 401 - Clean Water Act
Permit ID 2-6304-01440/00005

New Permit	Effective Date: 2/12/2009	Expiration Date: 12/31/2010
Modification # 1	Effective Date: 4/2/2009	Expiration Date: 12/31/2010
Modification # 2	Effective Date: 11/19/2009	Expiration Date: 12/31/2010
Modification # 3	Effective Date: 1/26/2010	Expiration Date: 12/31/2010

Excavation & Fill in Navigable Waters - Under Article 15, Title 5
Permit ID 2-6304-01440/00006

New Permit	Effective Date: 2/12/2009	Expiration Date: 12/31/2010
Modification # 1	Effective Date: 4/2/2009	Expiration Date: 12/31/2010
Modification # 2	Effective Date: 11/19/2009	Expiration Date: 12/31/2010
Modification # 3	Effective Date: 1/26/2010	Expiration Date: 12/31/2010

NYSDEC Approval

By acceptance of this permit, the permittee agrees that the permit is contingent upon strict compliance with the ECL, all applicable regulations, and all conditions included as part of this permit.

Permit Administrator: JOHN F CRYAN, Regional Permit Administrator

Address: NYSDEC REGION 2 HEADQUARTERS
47-40 21ST ST
LONG ISLAND CITY, NY 11101 -5407

Authorized Signature: John J. Lyman Date 01/26/10

Permit Components

NATURAL RESOURCE PERMIT CONDITIONS

WATER QUALITY CERTIFICATION SPECIFIC CONDITION

GENERAL CONDITIONS, APPLY TO ALL AUTHORIZED PERMITS

NOTIFICATION OF OTHER PERMITTEE OBLIGATIONS

NATURAL RESOURCE PERMIT CONDITIONS - Apply to the Following Permits: TIDAL WETLANDS; WATER QUALITY CERTIFICATION; EXCAVATION & FILL IN NAVIGABLE WATERS

1. **Conformance With Plans** All activities authorized by this permit must be in strict conformance with the approved plans submitted by the applicant or applicant's agent as part of the permit application. Such approved plans were prepared by STV Incorporated and Ground/Water Treatment & Technology for the City of New York Department of Transportation Division of Bridges.

2. **Conformance with Plans - Addenda** In addition to plans referenced in the Condition titled "Conformance with Plans," the activities authorized by this permit must be in strict conformance with the following approved plans and/or submissions made as part of the permit application:

a. Plans prepared by STV Incorporated for the City of New York Department of Transportation Division of Bridges contract no. HBQ1162E entitled: "Emergency Reconstruction of West Abutment and Wingwalls of Borden Avenue Bridge over Dutch Kills", SHEETS 8, 18, 67R, 71R, 72R, 75R, 78R, 82, 83, 88, 94R, 96, 97, 99 and 103 dated Nov 20, 2009, received by NYS DEC on Nov 16, 2009.

b. Plans prepared by STV Incorporated for the City of New York Department of Transportation Division of Bridges contract no. HBQ1162E entitled: "Emergency reconstruction of West Abutment and Wingwalls of Borden Avenue Bridge of Dutch Kills", Sheet 98 dated December 29, 2009, received by NYS DEC on January 12, 2010.

The location of the Water treatment system and treatment system details must be consistent with the plans and information included in the CAP approved by DEC on August 31, 2009.

3. **Mitigation Plan** Permittee must provide a Mitigation Plan that allows for the removal of approximately 75 cubic yards of debris/material from the Dutch Kills shoreline as well as the stabilization of disturbed areas on either side of the replaced bridge abutment. The stabilization design must result in no increase of net fill in the waterway and a shoreline with a proposed slope no further

seaward than the existing slope. Within ninety (90) days of permit issuance, the Permittee must submit for review and approval a proposed Mitigation Plan to NYSDEC Bureau of Marine Resources, 47-40 21st Street, Long Island City, New York 11101 (Attention: Jesse Krief). The Mitigation Plan must include a location, a detailed description of the project, and a time schedule for the mitigation project as well as permission from adjacent land owners for all work proposed on adjacent properties not owned by NYCDOT. The Mitigation Plan must be of sufficient detail and substance that it can be accepted by DEC with minimal revision. Within two (2) weeks of receiving comments to the proposed Mitigation Plan, Permittee must submit a revised proposed Mitigation Plan incorporating DEC's comments. Upon approval of the proposed Mitigation Plan Permittee must complete the Mitigation Plan pursuant to the approved schedule or, if no schedule is approved, without delay. Permittee may contact Jesse Krief in the NYSDEC Bureau of Marine Resources at (718) 482-6464 with any questions concerning the Mitigation Plan.

4. **Removal of Temporary Structures** Within sixty (60) days of the completion of the abutment reconstruction activities all temporary structures installed to facilitate the reconstruction must be removed in their entirety. After removal is complete all areas must be restored to original grades using only clean/natural fill and stabilized. Temporary structures to be removed include the sediment staging area, the temporary flume, outfall pipe and baffle, temporary timber pontoon bridge and landings.

5. **HDPE Geomembrane Liner Requirements** Installation of a continuous 60 MIL HDPE geomembrane liner must be installed over all oil contaminated sediment within the cofferdam surrounding the bridge abutment, and on slopes that expose similarly oil contaminated sediment. A one (1) foot minimum cushioning layer must be installed on either side of the liner in order to prevent puncturing. All liner panels must be hot welded together with at least a six (6) inch overlap. All edges of the geomembrane panels adjacent to the bridge abutment must be sealed to the bridge abutment. All liner edges not adjacent to the abutment must be buried in an anchoring trench. Where space is limited and an anchoring trench is not possible liner edges must be left flat and carefully covered with backfill.

6. **Timber Fender Replacement** The replacement of the timber fender system is limited to areas where the fender existed prior to removal of the abutment and must be attached directly to the abutment face as shown on the project plans referenced in Natural Resources Permit Condition 2, specifically sheets 8, 18 and 94R.

7. **Notice of Intent to Commence Work** At least five (5) days prior to commencement of the permitted activity, Permittee must complete and submit the attached "Notice of Intent to Commence Work" to NYSDEC Bureau of Marine Resources, 47-40 21st Street, Long Island City, New York 11101 (Attention: Jesselynne Krief).

8. **Post Permit Sign** The permit sign enclosed with this permit shall be posted in a conspicuous location on the worksite and adequately protected from the weather.

9. **Post Construction Photographs** Within 30 days of the completion of work authorized by this permit, Permittee must provide post-construction photographs of the work area to: NYSDEC Bureau of Marine Resources, 47-40 21st Street, Long Island City, New York 11101 (Attention: Jesse Krief).

10. **Best Management Practices** Best management practices must be employed to prevent the loss of construction materials, debris, and sediment from entering the waterways. Such practices may include, but are not limited to silt fencing, hay bales, floating booms, and oil capture systems. At minimum a floating boom with attached silt curtain must be installed encircling the entire project site for both the

preliminary inspection of the relieving platform and for the duration of the project.

11. **Precautions Against Contamination of Waters** All necessary precautions shall be taken to preclude contamination of any wetland or waterway by suspended solids, sediments, fuels, solvents, lubricants, epoxy coatings, paints, concrete, leachate or any other environmentally deleterious materials associated with the project.

12. **Discharge to Tidal Wetlands Prohibited** There must be no discharge of runoff or other effluent over or through any abutment wall or shoreline stabilization structure or into any tidal wetland or tidal wetlands adjacent area (unless specifically authorized by this permit).

13. **Water Treatment** All waters discharged into the Dutch Kills resulting from the dewatering activities associated with this project must first undergo treatment as described in the Corrective Action Plan approved by NYSDEC on August 31, 2009. The location of the treatment system must also remain consistent with the CAP. All effluent must be discharged into areas of the Dutch Kills with water depths greater than 4 feet at mean low water.

14. **Concrete/ Leachate Discharges Prohibited** During construction, concrete or leachate must not escape or be discharged. Washings from transit mix trucks, mixers, or other devices must not enter tidal wetlands and or protected buffer areas.

15. **Excavate Backfill Prior to Removal of Abutment** Prior to any construction or removal of the abutment and other shoreline stabilization structures all backfill must be excavated landward of the abutment and retained so as not to enter the waterway, tidal wetland or protected buffer area.

16. **Construct Abutment Prior to Fill Placement** Reconstruction or repair of the west abutment wall must be completed prior to placement of any fill material on either side of this structure.

17. **Installation of Cofferdam & Sheeting Protection Prior to Excavation** All cofferdams and protective sheeting functioning as the seaward project boundaries must be installed prior to excavation and removal of existing structures and fill immediately landward of such structures.

18. **Cofferdam Removal** Within (30) of the completion of the abutment wall reconstruction, all cofferdams, protective sheeting and associated bracing structures installed seaward of the abutment wall must be pulled in their entirety.

19. **No Weep Holes** The construction of weep holes in the abutment wall is strictly prohibited.

20. **Discharge of Effluent Obtained Through Excavation of Material** The effluent discharged from the water treatment system into the Dutch Kills Creek must not contain a visible contrast to the receiving water. If the effluent bears a substantial visible contrast to the receiving waters, discharging must cease and the water must be reintroduced back into the head of the treatment system until no visible contrast is seen.

21. **No Equipment Below High Water** Equipment operation below apparent high water is strictly prohibited.

22. **Dewatering** All sediment removed from within the excavation area must be dewatered within the confines of the concrete pad located in the sediment staging area shown on project plans referenced in

Natural Resource Permit Condition 2. All effluent must be transported to and incorporated into the treatment system.

23. **Storage of Construction Equipment & Materials** The storage of construction equipment and materials must be confined to within the project work site and or upland areas greater than 35 linear feet from the tidal wetland boundary and outside the area of excavation.

24. **Disposal of Excavated Material** All dredged material must be retained so as to not re-enter any water body, tidal wetland, or protected buffer area and be disposed of at an upland site approved to accept petroleum contaminated sediments. Excavated sediments from within the cofferdam area must be placed directly into a conveyance vehicle for transportation to the stockpile area. The sidecasting (double dipping) or temporary storage of excavated material is prohibited.

25. **Prohibited Treated Wood** Use of wood treated with creosote is prohibited. Wood treated with Pentachlorophenol (PCP) must not be used in wetlands or surface waters. Standard pressure treated lumber with CCA and its use is permitted.

26. **Use of wood Preservatives** Pressure treated wood used for construction of in-water structures must have been treated with a preservative and must have undergone a treatment process approved (stamped or otherwise marked as certified) by the American Wood Preservative Association.

Chromated Copper Arsenate (CCA) pressure treated wood must be clean and free of CCA surface deposits. Wood with surface deposits must be washed for at least 5 minutes under running water prior to use. (Note the following condition for the handling of wash water.)

Any wood debris such as sawdust or wash water must not enter any water body, including wetlands, or protected buffer areas. Field application of CCA is strictly prohibited.

27. **Debris Removal** Should any demolition or construction debris fall into the waterway or enter the tidal wetlands, it must be removed immediately.

28. **Debris Disposal** Any debris or excess material from construction of this project will be completely removed from the adjacent area (upland) and removed to an approved upland area for disposal. No debris is permitted in tidal wetlands or tidal wetlands adjacent area or protected buffer areas. All demolition and construction debris must be properly disposed of at a licensed facility.

29. **Clean Fill Material Only** All fill material must consist of "clean" sand, gravel, or soil. The use of material such as asphalt, slag, fly-ash, recycled concrete aggregate (RCA), broken concrete, or demolition debris is strictly prohibited.

30. **Containment of Disturbed Soils** All disturbed areas where soil will be temporarily exposed or stockpiled for longer than one (1) week must be contained by a continuous line of staked hay bales/silt curtain (or other NYSDEC approved method) placed on the seaward side between the fill and wetland or protected buffer area. Tarps are authorized to supplement these approved methods.

31. **No Interference With Navigation** There shall be no unreasonable interference with navigation by the work herein authorized.

32. **Prior Approval of Changes** If the Permittee desires to make any changes in construction techniques, species to be planted, the site plan, any mitigation plan, scheduling or staging of

construction, or any other aspect of this project, the Permittee shall submit a written request to the Regional Permit Administrator to make such proposed changes and shall not make such changes unless authorized in writing by the Department.

33. **Minimize Adverse Impacts to Wetlands, Wildlife, Water** All work must be performed in a manner which minimizes adverse impacts to wetlands, wildlife, water quality and natural resources.

34. **Failure to Meet Permit Conditions** Failure of the permittee to meet all the conditions of this permit is a violation of this permit and grounds for an order to immediately cease the permitted activity at the project site.

35. **State May Require Site Restoration** If upon the expiration or revocation of this permit, the project hereby authorized has not been completed, the applicant shall, without expense to the State, and to such extent and in such time and manner as the Department of Environmental Conservation may require, remove all or any portion of the uncompleted structure or fill and restore the site to its former condition. No claim shall be made against the State of New York on account of any such removal or alteration.

36. **State May Order Removal or Alteration of Work** If future operations by the State of New York require an alteration in the position of the structure or work herein authorized, or if, in the opinion of the Department of Environmental Conservation it shall cause unreasonable obstruction to the free navigation of said waters or flood flows or endanger the health, safety or welfare of the people of the State, or cause loss or destruction of the natural resources of the State, the owner may be ordered by the Department to remove or alter the structural work, obstructions, or hazards caused thereby without expense to the State, and if, upon the expiration or revocation of this permit, the structure, fill, excavation, or other modification of the watercourse hereby authorized shall not be completed, the owners, shall, without expense to the State, and to such extent and in such time and manner as the Department of Environmental Conservation may require, remove all or any portion of the uncompleted structure or fill and restore to its former condition the navigable and flood capacity of the watercourse. No claim shall be made against the State of New York on account of any such removal or alteration.

37. **State Not Liable for Damage** The State of New York shall in no case be liable for any damage or injury to the structure or work herein authorized which may be caused by or result from future operations undertaken by the State for the conservation or improvement of navigation, or for other purposes, and no claim or right to compensation shall accrue from any such damage.

WATER QUALITY CERTIFICATION SPECIFIC CONDITIONS

1. **Water Quality Certification** The NYS Department of Environmental Conservation hereby certifies that the subject project will not contravene effluent limitations or other limitations or standards under Sections 301, 302, 303, 306 and 307 of the Clean Water Act of 1977 (PL 95-217) provided that all of the conditions listed herein are met.

GENERAL CONDITIONS - Apply to ALL Authorized Permits:

1. **Facility Inspection by The Department** The permitted site or facility, including relevant records, is subject to inspection at reasonable hours and intervals by an authorized representative of the Department of Environmental Conservation (the Department) to determine whether the permittee is complying with this permit and the ECL. Such representative may order the work suspended pursuant to ECL 71- 0301 and SAPA 401(3).

The permittee shall provide a person to accompany the Department's representative during an inspection to the permit area when requested by the Department.

A copy of this permit, including all referenced maps, drawings and special conditions, must be available for inspection by the Department at all times at the project site or facility. Failure to produce a copy of the permit upon request by a Department representative is a violation of this permit.

2. **Relationship of this Permit to Other Department Orders and Determinations** Unless expressly provided for by the Department, issuance of this permit does not modify, supersede or rescind any order or determination previously issued by the Department or any of the terms, conditions or requirements contained in such order or determination.

3. **Applications For Permit Renewals, Modifications or Transfers** The permittee must submit a separate written application to the Department for permit renewal, modification or transfer of this permit. Such application must include any forms or supplemental information the Department requires. Any renewal, modification or transfer granted by the Department must be in writing. Submission of applications for permit renewal, modification or transfer are to be submitted to:

Regional Permit Administrator
NYSDEC REGION 2 HEADQUARTERS
47-40 21ST ST
LONG ISLAND CITY, NY11101 -5407

4. **Submission of Renewal Application** The permittee must submit a renewal application at least 30 days before permit expiration for the following permit authorizations: Excavation & Fill in Navigable Waters, Tidal Wetlands, Water Quality Certification.

5. **Permit Modifications, Suspensions and Revocations by the Department** The Department reserves the right to modify, suspend or revoke this permit. The grounds for modification, suspension or revocation include:

a. materially false or inaccurate statements in the permit application or supporting papers;

b. failure by the permittee to comply with any terms or conditions of the permit;

c. exceeding the scope of the project as described in the permit application;

d. newly discovered material information or a material change in environmental conditions, relevant technology or applicable law or regulations since the issuance of the existing permit;

e. noncompliance with previously issued permit conditions, orders of the commissioner, any provisions of the Environmental Conservation Law or regulations of the Department related to the permitted activity.

6. **Permit Transfer** Permits are transferrable unless specifically prohibited by statute, regulation or another permit condition. Applications for permit transfer should be submitted prior to actual transfer of ownership.

NOTIFICATION OF OTHER PERMITTEE OBLIGATIONS

Item A: Permittee Accepts Legal Responsibility and Agrees to Indemnification
The permittee, excepting state or federal agencies, expressly agrees to indemnify and hold harmless the Department of Environmental Conservation of the State of New York, its representatives, employees, and agents ("DEC") for all claims, suits, actions, and damages, to the extent attributable to the permittee's acts or omissions in connection with the permittee's undertaking of activities in connection with, or operation and maintenance of, the facility or facilities authorized by the permit whether in compliance or not in compliance with the terms and conditions of the permit. This indemnification does not extend to any claims, suits, actions, or damages to the extent attributable to DEC's own negligent or intentional acts or omissions, or to any claims, suits, or actions naming the DEC and arising under Article 78 of the New York Civil Practice Laws and Rules or any citizen suit or civil rights provision under federal or state laws.

Item B: Permittee's Contractors to Comply with Permit
The permittee is responsible for informing its independent contractors, employees, agents and assigns of their responsibility to comply with this permit, including all special conditions while acting as the permittee's agent with respect to the permitted activities, and such persons shall be subject to the same sanctions for violations of the Environmental Conservation Law as those prescribed for the permittee.

Item C: Permittee Responsible for Obtaining Other Required Permits
The permittee is responsible for obtaining any other permits, approvals, lands, easements and rights-of-way that may be required to carry out the activities that are authorized by this permit.

Item D: No Right to Trespass or Interfere with Riparian Rights
This permit does not convey to the permittee any right to trespass upon the lands or interfere with the riparian rights of others in order to perform the permitted work nor does it authorize the impairment of any rights, title, or interest in real or personal property held or vested in a person not a party to the permit.

NOTICE OF INTENT TO COMMENCE WORK

Date: _____

NYSDEC Marine Resources
Attn. Jesse Krief
N.Y.S.D.E.C Region 2 Office
47-40 21st Street
Long Island City, N.Y. 11101

Re: NYSDEC Permit No. 2-6304-01440/00004
NYC Dept. Of Transportation
Borden Avenue bridge over Dutch Kills
Borden Avenue between 27th Street & Review Avenue
Queens, New York

Dear Ms. Krief:

In accordance with Natural Resource Condition 7 of the referenced permit, I hereby serve notice to commence work on _____, 200___.

This is also to certify that, having read this entire permit, I am fully aware of and understand the general and special conditions therein, and agree to comply with all such conditions. I further understand that prior to undertaking any modification to the subject work, I must seek and receive written approval of the NYSDEC Regional Permit Administrator.

_____
Signature of Permittee

_____
Name of Permittee (please print)

_____
Signature of Contractor

_____
Name of Contractor (please print)

_____
Street Address of Contractor

_____
City, State, & Zip Code of Contractor

_____
Telephone Number of Contractor

WARNING

The permittee and his contractor (if any) are required to follow all permit conditions. Violations of the permit may lead to legal action, including the imposition of substantial monetary fines and corrective work.

cc: NYSDEC Environmental Permits

New York State
Department of Environmental Conservation

NOTICE

The Department of Environmental Conservation (DEC) has issued permit(s) pursuant to the Environmental Conservation Law for work being conducted at this site. For further information regarding the nature and extent of the approved work and any Department conditions applied to the approval, contact the Regional Permit Administrator listed below. Please refer to the permit number shown when contacting the DEC.

Permit Number 2-6302-01440/00004

Expiration Date December 31, 2010

Regional Permit Administrator

John F. Cryan
47-40 21st Street
Long Island City, New York 11101
(718) 482-4997

NOTE: This notice is NOT a permit

New York State Department of Environmental Conservation
Division of Environmental Permits, Region 2
47-40 21ST Street, Long Island City, NY 11101-5407
Phone: (718) 482-4997 • **FAX:** (718) 482-4975
Website: www.dec.state.ny.us

Alexander B. Grannis
Commissioner

February 23, 2010

George Klein, P.E.
Deputy Chief Engineer
NYCDOT
40 Worth Street, Room 1228
New York, NY 10003

Re: NYSDEC Permit application #2-6304-01440/00008
Borden Avenue Bridge West Abutment and Wingwall Reconstruction
Temporary construction dewatering discharge
ECL Article 15, Title 15 - Long Island Well
NOTICE OF PERMIT MODIFICATION and RENEWAL

Dear Mr. Klein:

Enclosed is your modified Long Island Well permit for the above referenced project. It was effective beginning January 1, 2010 and expires on December 31, 2010. The following conditions have been modified:

Condition #2, Conformance with Plans - Addenda

A. Drawing entitled "Moretrench Boreden Avenue Bridge, Drawing Number 1" dated 4/23/09, revised 11/30/09 and 12/1/09, signed and stamped by Leonard R. Guglielmo, P.E., received by NYSDEC on December 4, 2009;
B. Drawing entitled "MTA Borden Ave Brooklyn, NY – 600 GPM Proposed Temporary Water Treatment System" dated July 2, 2009, received by NYSDEC on December 4, 2009.
D. Application package dated February 23, 2009, received March 4, 2009; responses to Incomplete Notices dated April 19, 2009, May 5, 2009 and May 8, 2009; and modification request dated December 1, 2009, received December 4, 2009.

Condition #7, Notice of Intent to Commence Work and Condition #9, Withdrawal not Authorized until Permit #2-6304-01440/00004 have been removed.

All other terms, specifications and conditions of the permit remain as previously written. A modified permit is enclosed, please replace old copies with this modified permit, including at the project site.

Please read all permit conditions carefully. All permit documents must be available at the site upon request by Department staff and must be distributed to and understood by personnel

responsible for the proper operation of the facility and compliance with the permit requirements. Any violation of these permit conditions constitutes a violation of the Environmental Conservation Law.

Please note that the maximum withdrawal rate authorized by this permit is 864,000 gallons per day.

If you have any questions regarding this permit, you may contact the Division of Environmental Permits at the above address. Please refer to the above referenced numbers when you are corresponding with this office or when you are applying to renew or modify this permit.

Sincerely,

Stephen A. Watts III
Environmental Program Specialist II

cc: Chan Chakrabarti, NYSDEC DOW
Selvin Southwell, NYSDEC DOW
Jesselynne Krief, NYSDEC Marine Resources
Raphael Ketani, NYSDEC Spills
Harold Dickey, NYSDEC Permits
Joe Mahon, Moretrench
Alan Marchan, STV Incorporated
John Aitken, Maracap Construction Industries, Inc.
File

NEW YORK STATE DEPARTMENT OF ENVIRONMENTAL CONSERVATION
Facility DEC ID 2-6304-01440

PERMIT

Under the Environmental Conservation Law (ECL)

Permittee and Facility Information

Permit Issued To:
NYC DEPT OF TRANSPORTATION
40 WORTH ST 11TH FL
NEW YORK, NY 10003
(212) 676-0557

Facility:
NYC DOT - BORDEN AVE BRIDGE
BORDEN AVE BTWN 25TH & 27TH ST
LONG ISLAND CITY, NY 11101

Facility Location: in QUEENS COUNTY
Facility Principal Reference Point: NYTM-E: 589.262 NYTM-N: 4510.311
Latitude: 41°44'20.1" Longitude: 74°56'34.1"

Authorized Activity: Install and operate a temporary dewatering system to facilitate reconstruction of the west abutment and wingwalls of the Borden Avenue Bridge over the Dutch Kills in Queens with a maximum withdrawal of 864,000 gallons per day. Pumped groundwater is to be directed to a temporary 12" outfall into Dutch Kills.

Permit Authorizations

Long Island Well - Under Article 15, Title 15
Permit ID 2-6304-01440/00007

New Permit	Effective Date: 5/21/2009	Expiration Date: 12/31/2009
Modification # 1	Effective Date: 1/1/2010	Expiration Date: 12/31/2010

NYSDEC Approval

By acceptance of this permit, the permittee agrees that the permit is contingent upon strict compliance with the ECL, all applicable regulations, and all conditions included as part of this permit.

Permit Administrator: JOHN F CRYAN, Regional Permit Administrator
Address: NYSDEC REGION 2 HEADQUARTERS
47-40 21ST ST
LONG ISLAND CITY, NY 11101 -5407

Authorized Signature: John F. Cryan Date 12/31/09

Permit Components

LONG ISLAND WELL PERMIT CONDITIONS

GENERAL CONDITIONS, APPLY TO ALL AUTHORIZED PERMITS

NOTIFICATION OF OTHER PERMITTEE OBLIGATIONS

LONG ISLAND WELL PERMIT CONDITIONS

1. **Conformance With Plans** All activities authorized by this permit must be in strict conformance with the approved plans submitted by the applicant or applicant's agent as part of the permit application. Such approved plans were prepared by Moretrench American for NYCDOT.

2. **Conformance with Plans - Addenda** In addition to plans referenced in the Condition titled "Conformance with Plans," the activities authorized by this permit must be in strict conformance with the following approved plans and/or submissions made as part of the permit application:

A. Drawing entitled "Moretrench Boreden Avenue Bridge, Drawing Number 1" dated 4/23/09, revised 11/30/09 and 12/1/09, signed and stamped by Leonard R. Guglielmo, P.E., received by NYSDEC on December 4, 2009;

B. Drawing entitled "MTA Borden Ave Brooklyn, NY – 600 GPM Proposed Temporary Water Treatment System" dated July 2, 2009, received by NYSDEC on December 4, 2009.

C. Region 2 Long Island Well Dewatering System Detail Sheet, signed by T.Aleksander Patrick on 5/5/09, received by NYSDEC on 5/5/09.

D. Application package dated February 23, 2009, received March 4, 2009; responses to Incomplete Notices dated April 19, 2009, May 5, 2009 and May 8, 2009; and modification request dated December 1, 2009, received December 4, 2009.

3. **Dewatering Wells, Pumps, Pump Capacities and Maximum Withdrawal** This permit authorizes the following:

- **Dewatering Wells - 12**
- **Installed Pumps - 12 (Only 6 of 12 pumps are authorized to operate simultaneously)**
- **Pump Capacity - 100 GPM (10 HP) pumps** (Pump of lesser capacity may be substituted at permittee's discretion.)
- **Maximum Withdrawal - 864,000 gallons per day**

4. **Daily Pump Log** A daily pump log must be kept at the project site at all times. The pump log must be made available to authorized representatives of the Department during pumping operations.

5. **Handling of Contaminated Groundwater** The permittee is fully responsible for proper handling and all costs associated with the proper sampling, treatment and disposal of any contaminated groundwater.

6. **Well Driller Registration** The dewatering operation shall be performed by Well Drillers duly registered in accordance with Section 15-1525 of the Environmental Conservation Law of the State of New York.

7. **Posting of NYSDEC Permit Sign** The attached NYSDEC permit sign shall be posted, protected from the weather, in a conspicuous outdoor location at the project site. This sign is to be posted for the

duration of work authorized by this permit.

GENERAL CONDITIONS - Apply to ALL Authorized Permits:

1. **Facility Inspection by The Department** The permitted site or facility, including relevant records, is subject to inspection at reasonable hours and intervals by an authorized representative of the Department of Environmental Conservation (the Department) to determine whether the permittee is complying with this permit and the ECL. Such representative may order the work suspended pursuant to ECL 71- 0301 and SAPA 401(3).

The permittee shall provide a person to accompany the Department's representative during an inspection to the permit area when requested by the Department.

A copy of this permit, including all referenced maps, drawings and special conditions, must be available for inspection by the Department at all times at the project site or facility. Failure to produce a copy of the permit upon request by a Department representative is a violation of this permit.

2. **Relationship of this Permit to Other Department Orders and Determinations** Unless expressly provided for by the Department, issuance of this permit does not modify, supersede or rescind any order or determination previously issued by the Department or any of the terms, conditions or requirements contained in such order or determination.

3. **Applications For Permit Renewals, Modifications or Transfers** The permittee must submit a separate written application to the Department for permit renewal, modification or transfer of this permit. Such application must include any forms or supplemental information the Department requires. Any renewal, modification or transfer granted by the Department must be in writing. Submission of applications for permit renewal, modification or transfer are to be submitted to:

Regional Permit Administrator
NYSDEC REGION 2 HEADQUARTERS
47-40 21ST ST
LONG ISLAND CITY, NY11101 -5407

4. **Submission of Renewal Application** The permittee must submit a renewal application at least 30 days before permit expiration for the following permit authorizations: Long Island Well.

5. **Permit Modifications, Suspensions and Revocations by the Department** The Department reserves the right to modify, suspend or revoke this permit. The grounds for modification, suspension or revocation include:

a. materially false or inaccurate statements in the permit application or supporting papers:

b. failure by the permittee to comply with any terms or conditions of the permit:

c. exceeding the scope of the project as described in the permit application:

d. newly discovered material information or a material change in environmental conditions, relevant

technology or applicable law or regulations since the issuance of the existing permit;

e. noncompliance with previously issued permit conditions, orders of the commissioner, any provisions of the Environmental Conservation Law or regulations of the Department related to the permitted activity.

6. **Permit Transfer** Permits are transferrable unless specifically prohibited by statute, regulation or another permit condition. Applications for permit transfer should be submitted prior to actual transfer of ownership.

NOTIFICATION OF OTHER PERMITTEE OBLIGATIONS

Item A: Permittee Accepts Legal Responsibility and Agrees to Indemnification
The permittee, excepting state or federal agencies, expressly agrees to indemnify and hold harmless the Department of Environmental Conservation of the State of New York, its representatives, employees, and agents ("DEC") for all claims, suits, actions, and damages, to the extent attributable to the permittee's acts or omissions in connection with the permittee's undertaking of activities in connection with, or operation and maintenance of, the facility or facilities authorized by the permit whether in compliance or not in compliance with the terms and conditions of the permit. This indemnification does not extend to any claims, suits, actions, or damages to the extent attributable to DEC's own negligent or intentional acts or omissions, or to any claims, suits, or actions naming the DEC and arising under Article 78 of the New York Civil Practice Laws and Rules or any citizen suit or civil rights provision under federal or state laws.

Item B: Permittee's Contractors to Comply with Permit
The permittee is responsible for informing its independent contractors, employees, agents and assigns of their responsibility to comply with this permit, including all special conditions while acting as the permittee's agent with respect to the permitted activities, and such persons shall be subject to the same sanctions for violations of the Environmental Conservation Law as those prescribed for the permittee.

Item C: Permittee Responsible for Obtaining Other Required Permits
The permittee is responsible for obtaining any other permits, approvals, lands, easements and rights-of-way that may be required to carry out the activities that are authorized by this permit.

Item D: No Right to Trespass or Interfere with Riparian Rights
This permit does not convey to the permittee any right to trespass upon the lands or interfere with the riparian rights of others in order to perform the permitted work nor does it authorize the impairment of any rights, title, or interest in real or personal property held or vested in a person not a party to the permit.

95-20-1 (11/03) -9d

New York State
Department of Environmental Conservation

NOTICE

The Department of Environmental Conservation (DEC) has issued permit(s) pursuant to the Environmental Conservation Law for work being conducted at this site. For further information regarding the nature and extent of the approved work and any Department conditions applied to the approval, contact the Regional Permit Administrator listed below. Please refer to the permit number shown when contacting the DEC.

Permit Number 2-6304-01440/00007

Expiration Date 12/31/2010

Regional Permit Administrator

John F. Cryan
47-40 21st Street
LIC, NY 11101
(718) 482-4997

NOTE: This notice is **NOT** a permit

STV

July 12, 2010

Mr. Rafael Ketani, MS, CPG
NYS Department of Environmental Conservation
Hunters Point Plaza
47-40 21st Street
Long Island City, New York, NY 11101-5401

Reference: **Borden Avenue Bridge over Dutch Kills**
NYSDEC Spills No. 0903437
Treatment System Demobilization

Dear Mr. Ketani:

This letter serves as an update to the emergency reconstruction of the Borden Avenue Bridge site and the above-referenced spill case.

Dewatering of the cofferdam continues while construction progresses within the cofferdam. Currently, due to the progress of construction, the dewatering wells are no longer needed and are not in use. The water that is currently being pumped within the cofferdam and treated is surface water that seeps through the steel sheeting. .

To assess the water quality and whether the current filtration system is still needed, an influent water sample was collected from within the cofferdam prior to its entering the treatment system on Thursday, June 24, 2010. Attachment A provides the laboratory data report for the influent water sample. The sample was analyzed for the same parameters as the treated effluent samples and the data was compared to the Wastewater Limits for Surface Water Discharges specified in the Corrective Action Plan and Stipulation Agreement for this project. All parameter concentrations were below the Wastewater Limits for Surface Water Discharges specified. As a result, operation of the water treatment system is scheduled to be discontinued and the system dismantled during the week of July 12, 2010. However, the settling tank that was required in the original NYSDEC permit will remain in use as part of the dewatering operation.

In addition, discharge samples will no longer be collected as excavation within the cofferdam is completed, deep well dewatering is no longer necessary, and the current discharge to the Dutch Kills is limited to surface water only.

If you have any questions or comments, please contact me at 212-614-3412.

Sincerely,

Donald P. Hessemer

Donald P. Hessemer, CHMM
Senior Project Manager

cc: Beatrice Duran, NYCDOT
John Kurre, P.E., NYCDOT
Harold Palmer, HAKS

AN EMPLOYEE-OWNED COMPANY PROVIDING QUALITY SERVICE SINCE 1912 | 225 PARK AVENUE SOUTH
NEW YORK, NEW YORK 10003-1604
(212) 777-4400 FAX: (212) 529-5237

New York State Department of Environmental Conservation
Division of Environmental Permits, Region 2
47-40 21st Street, Long Island City, NY 11101-5407
Phone: (718) 482-4997 • **Fax:** (718) 482-4975
Website: www.dec.ny.gov

January 11, 2011

Donald P. Hessemer
STV Incorporated
225 Park Avenue South
New York, NY 10003-1604

Re: NYSDEC Permit No. 2-6304-01440/00004
NYC Dept. Of Transportation
Borden Avenue Bridge over Dutch Kills
Borden Avenue between 27th Street & Review Avenue
Queens, New York
6NYCRR Part 608 - Water Quality Certification
NYCRR Part 661 - Tidal Wetlands
ECL Article 15 - Protection of Waters
NOTICE OF PERMIT RENEWAL

Dear Mr. Hessemer:

In response to your request, please be advised that the expiration date of the above referenced permit has been extended to December 31, 2011. Your renewed permit is attached. Please read it carefully. Compliance with all permit conditions is required.

All other terms, specifications and conditions of the permit remain as previously written on January 26, 2010.

If you have any technical questions concerning the permit please contact Jesselynne Krief in the NYSDEC Bureau of Marine Resources at 718 482-6464. Administrative questions should be directed to Tammy Greco in the NYSDEC Division of Environmental Permits at 718 482-4997.

Sincerely,

Harold J. Dickey
Deputy Regional Permit Administrator

cc: NYC Dept. Of Transportation
NYSDEC Marine Resources
NYSDEC Law Enforcement

40 years of stewardship 1970-2010

NEW YORK STATE DEPARTMENT OF ENVIRONMENTAL CONSERVATION
Facility DEC ID 2-6304-01440

PERMIT

Under the Environmental Conservation Law (ECL)

Permittee and Facility Information

Permit Issued To:
NYC DEPT OF TRANSPORTATION
40 WORTH ST 11TH FL
NEW YORK, NY 10003
(212) 676-0557

Facility:
NYC DOT - BORDEN AVE BRIDGE
BORDEN AVE BTWN 25TH & 27TH ST
LONG ISLAND CITY, NY 11101

Facility Location: in QUEENS COUNTY **Village:** Long Island City
Facility Principal Reference Point: NYTM-E: 589.262 NYTM-N: 4510.311
Latitude: 41°44'20.1" Longitude: 74°56'34.1"
Project Location: Repair / Replace West Bridge Abutment
Authorized Activity: Repair / replace west bridge abutment.

Permit Authorizations

Tidal Wetlands - Under Article 25
Permit ID 2-6304-01440/00004
Renewal Effective Date: 1/11/2011 Expiration Date: 12/31/2011
Water Quality Certification - Under Section 401 - Clean Water Act
Permit ID 2-6304-01440/00005
Renewal Effective Date: 1/11/2011 Expiration Date: 12/31/2011
Excavation & Fill in Navigable Waters - Under Article 15, Title 5
Permit ID 2-6304-01440/00006
Renewal Effective Date: 1/11/2011 Expiration Date: 12/31/2011

NYSDEC Approval

By acceptance of this permit, the permittee agrees that the permit is contingent upon strict compliance with the ECL, all applicable regulations, and all conditions included as part of this permit.

Permit Administrator: HAROLD J DICKEY, Deputy Regional Permit Administrator
Address: NYSDEC REGION 2 HEADQUARTERS
47-40 21ST ST
LONG ISLAND CITY, NY 11101 -5407

Authorized Signature: _____ Date 1 / 11 / 11

Permit Components

NATURAL RESOURCE PERMIT CONDITIONS

WATER QUALITY CERTIFICATION SPECIFIC CONDITION

GENERAL CONDITIONS, APPLY TO ALL AUTHORIZED PERMITS

NOTIFICATION OF OTHER PERMITTEE OBLIGATIONS

NATURAL RESOURCE PERMIT CONDITIONS - Apply to the Following Permits: TIDAL WETLANDS; WATER QUALITY CERTIFICATION; EXCAVATION & FILL IN NAVIGABLE WATERS

1. **Conformance With Plans** All activities authorized by this permit must be in strict conformance with the approved plans submitted by the applicant or applicant's agent as part of the permit application. Such approved plans were prepared by STV Incorporated & Ground Water Treatment & technology for the City of New York Department of Transportation - Division of Bridges.

2. **Conformance with Plans - Addenda** In addition to plans referenced in the Condition titled "Conformance with Plans," the activities authorized by this permit must be in strict conformance with the following approved plans and/or submissions made as part of the permit application:

a. Plans prepared by STV Incorporated for the City of New York Department of Transportation Division of Bridges contract no. HBQ1162E entitled: "Emergency Reconstruction of West Abutment and Wingwalls of Borden Avenue Bridge over Dutch Kills", SHEETS 8, 18, 67R, 71R, 72R, 75R, 78R, 82, 83, 88, 94R, 96, 97, 99 and 103 dated Nov 20, 2009, received by NYS DEC on Nov 16, 2009.

b. Plans prepared by STV Incorporated for the City of New York Department of Transportation Division of Bridges contract no. HBQ1162E entitled: "Emergency reconstruction of West Abutment and Wingwalls of Borden Avenue Bridge of Dutch Kills", Sheet 98 dated December 29, 2009, received by NYS DEC on January 12, 2010.

The location of the Water treatment system and treatment system details must be consistent with the plans and information included in the CAP approved by DEC on August 31, 2009.

3. **Mitigation Plan** Permittee must provide a Mitigation Plan that allows for the removal of approximately 75 cubic yards of debris/material from the Dutch Kills shoreline as well as the stabilization of disturbed areas on either side of the replaced bridge abutment. The stabilization design must result in no increase of net fill in the waterway and a shoreline with a proposed slope no further seaward than the existing slope. Within ninety (90) days of permit issuance, the Permittee must submit for review and approval a proposed Mitigation Plan to NYSDEC Bureau of Marine Resources, 47-40 21st Street, Long Island City, New York 11101 (Attention: Jesse Krief). The Mitigation Plan must include a location, a detailed description of the project, and a time schedule for the mitigation project as well as permission from adjacent land owners for all work proposed on adjacent properties not owned by NYCDOT. The Mitigation Plan must be of sufficient detail and substance that it can be accepted by DEC with minimal revision. Within two (2) weeks of receiving comments to the proposed Mitigation Plan, Permittee must submit a revised proposed Mitigation Plan incorporating DEC's comments. Upon approval of the proposed Mitigation Plan Permittee must complete the Mitigation Plan pursuant to the

approved schedule or, if no schedule is approved, without delay. Permittee may contact Jesse Krief in the NYSDEC Bureau of Marine Resources at (718) 482-6464 with any questions concerning the Mitigation Plan.

4. **Removal of Temporary Structures** Within sixty (60) days of the completion of the abutment reconstruction activities all temporary structures installed to facilitate the reconstruction must be removed in their entirety. After removal is complete all areas must be restored to original grades using only clean/natural fill and stabilized. Temporary structures to be removed include the sediment staging area, the temporary flume, outfall pipe and baffle, temporary timber pontoon bridge and landings.

5. **HDPE Geomembrane Liner Requirements** Installation of a continuous 60 MIL HDPE geomembrane liner must be installed over all oil contaminated sediment within the cofferdam surrounding the bridge abutment, and on slopes that expose similarly oil contaminated sediment. A one (1) foot minimum cushioning layer must be installed on either side of the liner in order to prevent puncturing. All liner panels must be hot welded together with at least a six (6) inch overlap. All edges of the geomembrane panels adjacent to the bridge abutment must be sealed to the bridge abutment. All liner edges not adjacent to the abutment must be buried in an anchoring trench. Where space is limited and an anchoring trench is not possible liner edges must be left flat and carefully covered with backfill.

6. **Timber Fender Replacement** The replacement of the timber fender system is limited to areas where the fender existed prior to removal of the abutment and must be attached directly to the abutment face as shown on the project plans referenced in Natural Resources Permit Condition 2, specifically sheets 8, 18 and 94R.

7. **Notice of Intent to Commence Work** At least five (5) days prior to commencement of the permitted activity, Permittee must complete and submit the attached "Notice of Intent to Commence Work" to NYSDEC Bureau of Marine Resources, 47-40 21st Street, Long Island City, New York 11101 (Attention: Jesselynne Krief).

8. **Post Permit Sign** The permit sign enclosed with this permit shall be posted in a conspicuous location on the worksite and adequately protected from the weather.

9. **Post Construction Photographs** Within 30 days of the completion of work authorized by this permit, Permittee must provide post-construction photographs of the work area to: NYSDEC Bureau of Marine Resources, 47-40 21st Street, Long Island City, New York 11101 (Attention: Jesse Krief).

10. **Best Management Practices** Best management practices must be employed to prevent the loss of construction materials, debris, and sediment from entering the waterways. Such practices may include, but are not limited to silt fencing, hay bales, floating booms, and oil capture systems. At minimum a floating boom with attached silt curtain must be installed encircling the entire project site for both the preliminary inspection of the relieving platform and for the duration of the project.

11. **Precautions Against Contamination of Waters** All necessary precautions shall be taken to preclude contamination of any wetland or waterway by suspended solids, sediments, fuels, solvents, lubricants, epoxy coatings, paints, concrete, leachate or any other environmentally deleterious materials associated with the project.

12. **Discharge to Tidal Wetlands Prohibited** There must be no discharge of runoff or other effluent over or through any abutment wall or shoreline stabilization structure or into any tidal wetland or tidal wetlands adjacent area (unless specifically authorized by this permit).

13. **Water Treatment** All waters discharged into the Dutch Kills resulting from the dewatering activities associated with this project must first undergo treatment as described in the Corrective Action Plan approved by NYSDEC on August 31, 2009. The location of the treatment system must also remain consistent with the CAP. All effluent must be discharged into areas of the Dutch Kills with water depths greater than 4 feet at mean low water.

14. **Concrete/ Leachate Discharges Prohibited** During construction, concrete or leachate must not escape or be discharged. Washings from transit mix trucks, mixers, or other devices must not enter tidal wetlands and or protected buffer areas.

15. **Excavate Backfill Prior to Removal of Abutment** Prior to any construction or removal of the abutment and other shoreline stabilization structures all backfill must be excavated landward of the abutment and retained so as not to enter the waterway, tidal wetland or protected buffer area.

16. **Construct Abutment Prior to Fill Placement** Reconstruction or repair of the west abutment wall must be completed prior to placement of any fill material on either side of this structure.

17. **Installation of Cofferdam & Sheeting Protection Prior to Excavation** All cofferdams and protective sheeting functioning as the seaward project boundaries must be installed prior to excavation and removal of existing structures and fill immediately landward of such structures.

18. **Cofferdam Removal** Within (30) of the completion of the abutment wall reconstruction, all cofferdams, protective sheeting and associated bracing structures installed seaward of the abutment wall must be pulled in their entirety.

19. **No Weep Holes** The construction of weep holes in the abutment wall is strictly prohibited.

20. **Discharge of Effluent Obtained Through Excavation of Material** The effluent discharged from the water treatment system into the Dutch Kills Creek must not contain a visible contrast to the receiving water. If the effluent bears a substantial visible contrast to the receiving waters, discharging must cease and the water must be reintroduced back into the head of the treatment system until no visible contrast is seen.

21. **No Equipment Below High Water** Equipment operation below apparent high water is strictly prohibited.

22. **Dewatering** All sediment removed from within the excavation area must be dewatered within the confines of the concrete pad located in the sediment staging area shown on project plans referenced in Natural Resource Permit Condition 2. All effluent must be transported to and incorporated into the treatment system.

23. **Storage of Construction Equipment & Materials** The storage of construction equipment and materials must be confined to within the project work site and or upland areas greater than 35 linear feet from the tidal wetland boundary and outside the area of excavation.

24. **Disposal of Excavated Material** All dredged material must be retained so as to not re-enter any water body, tidal wetland, or protected buffer area and be disposed of at an upland site approved to accept petroleum contaminated sediments. Excavated sediments from within the cofferdam area must be placed directly into a conveyance vehicle for transportation to the stockpile area. The sidecasting (double

dipping) or temporary storage of excavated material is prohibited.

25. **Prohibited Treated Wood** Use of wood treated with creosote is prohibited. Wood treated with Pentachlorophenol (PCP) must not be used in wetlands or surface waters. Standard pressure treated lumber with CCA and its use is permitted.

26. **Use of wood Preservatives** Pressure treated wood used for construction of in-water structures must have been treated with a preservative and must have undergone a treatment process approved (stamped or otherwise marked as certified) by the American Wood Preservative Association.

Chromated Copper Arsenate (CCA) pressure treated wood must be clean and free of CCA surface deposits. Wood with surface deposits must be washed for at least 5 minutes under running water prior to use. (Note the following condition for the handling of wash water.)

Any wood debris such as sawdust or wash water must not enter any water body, including wetlands, or protected buffer areas. Field application of CCA is strictly prohibited.

27. **Debris Removal** Should any demolition or construction debris fall into the waterway or enter the tidal wetlands, it must be removed immediately.

28. **Debris Disposal** Any debris or excess material from construction of this project will be completely removed from the adjacent area (upland) and removed to an approved upland area for disposal. No debris is permitted in tidal wetlands or tidal wetlands adjacent area or protected buffer areas. All demolition and construction debris must be properly disposed of at a licensed facility.

29. **Clean Fill Material Only** All fill material must consist of "clean" sand, gravel, or soil. The use of material such as asphalt, slag, fly-ash, recycled concrete aggregate (RCA), broken concrete, or demolition debris is strictly prohibited.

30. **Containment of Disturbed Soils** All disturbed areas where soil will be temporarily exposed or stockpiled for longer than one (1) week must be contained by a continuous line of staked hay bales/silt curtain (or other NYSDEC approved method) placed on the seaward side between the fill and wetland or protected buffer area. Tarps are authorized to supplement these approved methods.

31. **No Interference With Navigation** There shall be no unreasonable interference with navigation by the work herein authorized.

32. **Prior Approval of Changes** If the Permittee desires to make any changes in construction techniques, species to be planted, the site plan, any mitigation plan, scheduling or staging of construction, or any other aspect of this project, the Permittee shall submit a written request to the Regional Permit Administrator to make such proposed changes and shall not make such changes unless authorized in writing by the Department.

33. **Minimize Adverse Impacts to Wetlands, Wildlife, Water** All work must be performed in a manner which minimizes adverse impacts to wetlands, wildlife, water quality and natural resources.

34. **Failure to Meet Permit Conditions** Failure of the permittee to meet all the conditions of this permit is a violation of this permit and grounds for an order to immediately cease the permitted activity at the project site.

35. **State May Require Site Restoration** If upon the expiration or revocation of this permit, the project hereby authorized has not been completed, the applicant shall, without expense to the State, and to such extent and in such time and manner as the Department of Environmental Conservation may require, remove all or any portion of the uncompleted structure or fill and restore the site to its former condition. No claim shall be made against the State of New York on account of any such removal or alteration.

36. **State May Order Removal or Alteration of Work** If future operations by the State of New York require an alteration in the position of the structure or work herein authorized, or if, in the opinion of the Department of Environmental Conservation it shall cause unreasonable obstruction to the free navigation of said waters or flood flows or endanger the health, safety or welfare of the people of the State, or cause loss or destruction of the natural resources of the State, the owner may be ordered by the Department to remove or alter the structural work, obstructions, or hazards caused thereby without expense to the State, and if, upon the expiration or revocation of this permit, the structure, fill, excavation, or other modification of the watercourse hereby authorized shall not be completed, the owners, shall, without expense to the State, and to such extent and in such time and manner as the Department of Environmental Conservation may require, remove all or any portion of the uncompleted structure or fill and restore to its former condition the navigable and flood capacity of the watercourse. No claim shall be made against the State of New York on account of any such removal or alteration.

37. **State Not Liable for Damage** The State of New York shall in no case be liable for any damage or injury to the structure or work herein authorized which may be caused by or result from future operations undertaken by the State for the conservation or improvement of navigation, or for other purposes, and no claim or right to compensation shall accrue from any such damage.

WATER QUALITY CERTIFICATION SPECIFIC CONDITIONS

1. **Water Quality Certification** The NYS Department of Environmental Conservation hereby certifies that the subject project will not contravene effluent limitations or other limitations or standards under Sections 301, 302, 303, 306 and 307 of the Clean Water Act of 1977 (PL 95-217) provided that all of the conditions listed herein are met.

GENERAL CONDITIONS - Apply to ALL Authorized Permits:

1. **Facility Inspection by The Department** The permitted site or facility, including relevant records, is subject to inspection at reasonable hours and intervals by an authorized representative of the Department of Environmental Conservation (the Department) to determine whether the permittee is complying with this permit and the ECL. Such representative may order the work suspended pursuant to ECL 71- 0301 and SAPA 401(3).

The permittee shall provide a person to accompany the Department's representative during an inspection to the permit area when requested by the Department.

A copy of this permit, including all referenced maps, drawings and special conditions, must be available for inspection by the Department at all times at the project site or facility. Failure to produce a copy of

the permit upon request by a Department representative is a violation of this permit.

2. **Relationship of this Permit to Other Department Orders and Determinations** Unless expressly provided for by the Department, issuance of this permit does not modify, supersede or rescind any order or determination previously issued by the Department or any of the terms, conditions or requirements contained in such order or determination.

3. **Applications For Permit Renewals, Modifications or Transfers** The permittee must submit a separate written application to the Department for permit renewal, modification or transfer of this permit. Such application must include any forms or supplemental information the Department requires. Any renewal, modification or transfer granted by the Department must be in writing. Submission of applications for permit renewal, modification or transfer are to be submitted to:

Regional Permit Administrator
NYSDEC REGION 2 HEADQUARTERS
47-40 21ST ST
LONG ISLAND CITY, NY11101 -5407

4. **Submission of Renewal Application** The permittee must submit a renewal application at least 30 days before permit expiration for the following permit authorizations: Excavation & Fill in Navigable Waters, Tidal Wetlands, Water Quality Certification.

5. **Permit Modifications, Suspensions and Revocations by the Department** The Department reserves the right to modify, suspend or revoke this permit. The grounds for modification, suspension or revocation include:

a. materially false or inaccurate statements in the permit application or supporting papers;

b. failure by the permittee to comply with any terms or conditions of the permit;

c. exceeding the scope of the project as described in the permit application;

d. newly discovered material information or a material change in environmental conditions, relevant technology or applicable law or regulations since the issuance of the existing permit;

e. noncompliance with previously issued permit conditions, orders of the commissioner, any provisions of the Environmental Conservation Law or regulations of the Department related to the permitted activity.

6. **Permit Transfer** Permits are transferrable unless specifically prohibited by statute, regulation or another permit condition. Applications for permit transfer should be submitted prior to actual transfer of ownership.

NOTIFICATION OF OTHER PERMITTEE OBLIGATIONS

Item A: Permittee Accepts Legal Responsibility and Agrees to Indemnification
The permittee, excepting state or federal agencies, expressly agrees to indemnify and hold harmless the

Department of Environmental Conservation of the State of New York, its representatives, employees, and agents ("DEC") for all claims, suits, actions, and damages, to the extent attributable to the permittee's acts or omissions in connection with the permittee's undertaking of activities in connection with, or operation and maintenance of, the facility or facilities authorized by the permit whether in compliance or not in compliance with the terms and conditions of the permit. This indemnification does not extend to any claims, suits, actions, or damages to the extent attributable to DEC's own negligent or intentional acts or omissions, or to any claims, suits, or actions naming the DEC and arising under Article 78 of the New York Civil Practice Laws and Rules or any citizen suit or civil rights provision under federal or state laws.

Item B: Permittee's Contractors to Comply with Permit
The permittee is responsible for informing its independent contractors, employees, agents and assigns of their responsibility to comply with this permit, including all special conditions while acting as the permittee's agent with respect to the permitted activities, and such persons shall be subject to the same sanctions for violations of the Environmental Conservation Law as those prescribed for the permittee.

Item C: Permittee Responsible for Obtaining Other Required Permits
The permittee is responsible for obtaining any other permits, approvals, lands, easements and rights-of-way that may be required to carry out the activities that are authorized by this permit.

Item D: No Right to Trespass or Interfere with Riparian Rights
This permit does not convey to the permittee any right to trespass upon the lands or interfere with the riparian rights of others in order to perform the permitted work nor does it authorize the impairment of any rights, title, or interest in real or personal property held or vested in a person not a party to the permit.

NOTICE OF INTENT TO COMMENCE WORK

Date: _____

NYSDEC Marine Resources
Attn. Jesse Krief
N.Y.S.D.E.C Region 2 Office
47-40 21st Street
Long Island City, N.Y. 11101

Re: NYSDEC Permit No. 2-6304-01440/00004
NYC Dept. Of Transportation
Borden Avenue bridge over Dutch Kills
Borden Avenue between 27th Street & Review Avenue
Queens, New York

Dear Ms. Krief:

In accordance with Natural Resource Condition 7 of the referenced permit, I hereby serve notice to commence work on _____, 200____.

This is also to certify that, having read this entire permit, I am fully aware of and understand the general and special conditions therein, and agree to comply with all such conditions. I further understand that prior to undertaking any modification to the subject work, I must seek and receive written approval of the NYSDEC Regional Permit Administrator.

_____
Signature of Permittee

_____
Name of Permittee (please print)

_____
Signature of Contractor

_____
Name of Contractor (please print)

_____
Street Address of Contractor

_____
City, State, & Zip Code of Contractor

_____
Telephone Number of Contractor

WARNING

The permittee and his contractor (if any) are required to follow all permit conditions. Violations of the permit may lead to legal action, including the imposition of substantial monetary fines and corrective work.

cc: NYSDEC Environmental Permits

95-20-1 (11/03) -9d

New York State
Department of Environmental Conservation

NOTICE

The Department of Environmental Conservation (DEC) has issued permit(s) pursuant to the Environmental Conservation Law for work being conducted at this site. For further information regarding the nature and extent of the approved work and any Department conditions applied to the approval, contact the Regional Permit Administrator listed below. Please refer to the permit number shown when contacting the DEC.

Permit Number 2-6304-01440/00004

Expiration Date December 31, 2011

Regional Permit Administrator
John F. Cryan
47-40 21st Street
LIC, NY 11101
(718) 482-4997

NOTE: This notice is **NOT** a permit

STV

July 12, 2010

Mr. Rafael Ketani, MS, CPG
NYS Department of Environmental Conservation
Hunters Point Plaza
47-40 21st Street
Long Island City, New York, NY 11101-5401

Reference: **Borden Avenue Bridge over Dutch Kills**
NYSDEC Spills No. 0903437
Treatment System Demobilization

Dear Mr. Ketani:

This letter serves as an update to the emergency reconstruction of the Borden Avenue Bridge site and the above-referenced spill case.

Dewatering of the cofferdam continues while construction progresses within the cofferdam. Currently, due to the progress of construction, the dewatering wells are no longer needed and are not in use. The water that is currently being pumped within the cofferdam and treated is surface water that seeps through the steel sheeting. .

To assess the water quality and whether the current filtration system is still needed, an influent water sample was collected from within the cofferdam prior to its entering the treatment system on Thursday, June 24, 2010. Attachment A provides the laboratory data report for the influent water sample. The sample was analyzed for the same parameters as the treated effluent samples and the data was compared to the Wastewater Limits for Surface Water Discharges specified in the Corrective Action Plan and Stipulation Agreement for this project. All parameter concentrations were below the Wastewater Limits for Surface Water Discharges specified. As a result, operation of the water treatment system is scheduled to be discontinued and the system dismantled during the week of July 12, 2010. However, the settling tank that was required in the original NYSDEC permit will remain in use as part of the dewatering operation.

In addition, discharge samples will no longer be collected as excavation within the cofferdam is completed, deep well dewatering is no longer necessary, and the current discharge to the Dutch Kills is limited to surface water only.

If you have any questions or comments, please contact me at 212-614-3412.

Sincerely,

Donald P. Hessemer

Donald P. Hessemer, CHMM
Senior Project Manager

cc: Beatrice Duran, NYCDOT
John Kurre, P.E., NYCDOT
Harold Palmer, HAKS

225 PARK AVENUE SOUTH
NEW YORK, NEW YORK 10003-1604
(212) 777-4400 FAX: (212) 529-5237

Alan Marchan, P.E., STV
Kedari Reddy, NYCDOT

Attachment: A – Laboratory Data Report (Influent Sample 06-24-10)

Attachment A

Laboratory Data Report (Influent Sample 06-24-10)

ALPHA ANALYTICAL

ANALYTICAL REPORT

Lab Number:	L1009532
Client:	Environmental Planning and Management 1983 Marcus Avenue Suite 109 Lake Success, NY 11042
ATTN:	Rick Hart
Phone:	(516) 328-1194
Project Name:	BORDEN AVE
Project Number:	29007
Report Date:	07/02/10

Certifications & Approvals: MA (M-MA086), NY NELAC (11148), CT (PH-0574), NH (2003), NJ (MA935), RI (LAO00065), ME (MA0086), PA (Registration #68-03671), USDA (Permit #S-72578), US Army Corps of Engineers, Naval FESC.

Eight Walkup Drive, Westborough, MA 01581-1019
508-898-9220 (Fax) 508-898-9193 800-624-9220 - www.alphalab.com

Project Name: BORDEN AVE
Project Number: 29007

Lab Number: L1009532
Report Date: 07/02/10

Alpha Sample ID	Client ID	Sample Location	Collection Date/Time
L1009532-01	BAINF062410	2323 BORDEN AVE	06/24/10 07:45

Project Name: BORDEN AVE
Project Number: 29007

Lab Number: L1009532
Report Date: 07/02/10

Case Narrative

The samples were received in accordance with the Chain of Custody and no significant deviations were encountered during the preparation or analysis unless otherwise noted. Sample Receipt, Container Information, and the Chain of Custody are located at the back of the report.

Results contained within this report relate only to the samples submitted under this Alpha Lab Number and meet all of the requirements of NELAC, for all NELAC accredited parameters. The data presented in this report is organized by parameter (i.e. VOC, SVOC, etc.). Sample specific Quality Control data (i.e. Surrogate Spike Recovery) is reported at the end of the target analyte list for each individual sample, followed by the Laboratory Batch Quality Control at the end of each parameter. If a sample was re-analyzed or re-extracted due to a required quality control corrective action and if both sets of data are reported, the Laboratory ID of the re-analysis or re-extraction is designated with an "R" or "RE", respectively. When multiple Batch Quality Control elements are reported (e.g. more than one LCS), the associated samples for each element are noted in the grey shaded header line of each data table. Any Laboratory Batch, Sample Specific % recovery or RPD value that is outside the listed Acceptance Criteria is bolded in the report. Definitions of all data qualifiers and acronyms used in this report are provided in the Glossary located at the back of the report.

Please see the associated ADEx data file for a comparison of laboratory reporting limits that were achieved with the regulatory Numerical Standards requested on the Chain of Custody.

For additional information, please contact Client Services at 800-624-9220.

Sample "BAINF062410" was received without the container for pH analysis. An aliquot was taken from an unpreserved container.

I, the undersigned, attest under the pains and penalties of perjury that, to the best of my knowledge and belief and based upon my personal inquiry of those responsible for providing the information contained in this analytical report, such information is accurate and complete. This certificate of analysis is not complete unless this page accompanies any and all pages of this report.

Authorized Signature: Michelle M. Morris

Title: Technical Director/Representative

Date: 07/02/10

ORGANICS

VOLATILES

Project Name: BORDEN AVE
Project Number: 29007

Lab Number: L1009532
Report Date: 07/02/10

SAMPLE RESULTS

Lab ID: L1009532-01
Client ID: BAINF062410
Sample Location: 2323 BORDEN AVE
Matrix: Water
Analytical Method: 5,624
Analytical Date: 06/25/10 16:40
Analyst: TT

Date Collected: 06/24/10 07:45
Date Received: 06/24/10
Field Prep: Not Specified

Parameter	Result	Qualifier	Units	RL	MDL	Dilution Factor
Volatile Organics by GC/MS - Westborough Lab						
Benzene	ND		ug/l	1.0	--	1
Toluene	ND		ug/l	1.0	--	1
Ethylbenzene	ND		ug/l	1.0	--	1
p/m-Xylene	ND		ug/l	2.0	--	1
o-xylene	ND		ug/l	1.0	--	1
Xylene (Total)	ND		ug/l	2.0	--	1
Methyl tert butyl ether	ND		ug/l	10	--	1

Surrogate	% Recovery	Qualifier	Acceptance Criteria
Pentafluorobenzene	97		80-120
Fluorobenzene	102		80-120
4-Bromofluorobenzene	102		80-120

Project Name: BORDEN AVE
Project Number: 29007

Lab Number: L1009532
Report Date: 07/02/10

Method Blank Analysis
Batch Quality Control

Analytical Method: 5,624
Analytical Date: 06/25/10 09:22
Analyst: TT

Parameter	Result	Qualifier	Units	RL	MDL
Volatile Organics by GC/MS - Westborough Lab for sample(s): 01 Batch: WG419849-2					
Methylene chloride	ND		ug/l	5.0	--
1,1-Dichloroethane	ND		ug/l	1.5	--
Chloroform	ND		ug/l	1.5	--
Carbon tetrachloride	ND		ug/l	1.0	--
1,2-Dichloropropane	ND		ug/l	3.5	--
Dibromochloromethane	ND		ug/l	1.0	--
1,1,2-Trichloroethane	ND		ug/l	1.5	--
2-Chloroethylvinyl ether	ND		ug/l	10	--
Tetrachloroethene	ND		ug/l	1.5	--
Chlorobenzene	ND		ug/l	3.5	--
Trichlorofluoromethane	ND		ug/l	5.0	--
1,2-Dichloroethane	ND		ug/l	1.5	--
1,1,1-Trichloroethane	ND		ug/l	2.0	--
Bromodichloromethane	ND		ug/l	1.0	--
trans-1,3-Dichloropropene	ND		ug/l	1.5	--
cis-1,3-Dichloropropene	ND		ug/l	1.5	--
Bromoform	ND		ug/l	1.0	--
1,1,2,2-Tetrachloroethane	ND		ug/l	1.0	--
Benzene	ND		ug/l	1.0	--
Toluene	ND		ug/l	1.0	--
Ethylbenzene	ND		ug/l	1.0	--
Chloromethane	ND		ug/l	10	--
Bromomethane	ND		ug/l	5.0	--
Vinyl chloride	ND		ug/l	2.0	--
Chloroethane	ND		ug/l	2.0	--
1,1-Dichloroethene	ND		ug/l	1.0	--
trans-1,2-Dichloroethene	ND		ug/l	1.5	--
cis-1,2-Dichloroethene	ND		ug/l	1.0	--
Trichloroethene	ND		ug/l	1.0	--
1,2-Dichlorobenzene	ND		ug/l	5.0	--
1,3-Dichlorobenzene	ND		ug/l	5.0	--

Project Name: BORDEN AVE
Project Number: 29007

Lab Number: L1009532
Report Date: 07/02/10

Method Blank Analysis
Batch Quality Control

Analytical Method: 5,624
Analytical Date: 06/25/10 09:22
Analyst: TT

Parameter	Result	Qualifier	Units	RL	MDL
Volatile Organics by GC/MS - Westborough Lab for sample(s): 01 Batch: WG419849-2					
1,4-Dichlorobenzene	ND		ug/l	5.0	--
p/m-Xylene	ND		ug/l	2.0	--
o-xylene	ND		ug/l	1.0	--
Xylene (Total)	ND		ug/l	2.0	--
Styrene	ND		ug/l	1.0	--
Acetone	ND		ug/l	10	--
Carbon disulfide	ND		ug/l	5.0	--
2-Butanone	ND		ug/l	10	--
Vinyl acetate	ND		ug/l	20	--
4-Methyl-2-pentanone	ND		ug/l	10	--
2-Hexanone	ND		ug/l	10	--
Acrolein	ND		ug/l	8.0	--
Acrylonitrile	ND		ug/l	10	--
Methyl tert butyl ether	ND		ug/l	10	--
Dibromomethane	ND		ug/l	1.0	--
1,4-Dioxane	ND		ug/l	2000	--
Tert-Butyl Alcohol	ND		ug/l	100	--
Tertiary-Amyl Methyl Ether	ND		ug/l	20	--

Surrogate	%Recovery	Qualifier	Acceptance Criteria
Pentafluorobenzene	99		80-120
Fluorobenzene	99		80-120
4-Bromofluorobenzene	113		80-120

Lab Control Sample Analysis
Batch Quality Control

Project Name: BORDEN AVE
Project Number: 29007

Lab Number: L1009532
Report Date: 07/02/10

Parameter	LCS %Recovery	Qual	LCSD %Recovery	Qual	%Recovery Limits	RPD	Qual	RPD Limits
Volatile Organics by GC/MS - Westborough Lab Associated sample(s): 01 Batch: WG419849-1								
Methylene chloride	96		-		1-221	-		30
1,1-Dichloroethane	102		-		59-155	-		30
Chloroform	104		-		51-138	-		30
Carbon tetrachloride	101		-		70-140	-		30
1,2-Dichloropropane	100		-		1-210	-		30
Dibromochloromethane	105		-		53-149	-		30
1,1,2-Trichloroethane	105		-		52-150	-		30
2-Chloroethylvinyl ether	100		-		1-305	-		30
Tetrachloroethene	116		-		64-148	-		30
Chlorobenzene	116		-		37-160	-		30
Trichlorofluoromethane	91		-		17-181	-		30
1,2-Dichloroethane	100		-		49-155	-		30
1,1,1-Trichloroethane	97		-		52-162	-		30
Bromodichloromethane	108		-		35-155	-		30
trans-1,3-Dichloropropene	94		-		17-183	-		30
cis-1,3-Dichloropropene	98		-		1-227	-		30
Bromoform	102		-		45-169	-		30
1,1,2,2-Tetrachloroethane	105		-		46-157	-		30
Benzene	100		-		37-151	-		30
Toluene	105		-		47-150	-		30
Ethylbenzene	114		-		37-162	-		30

Lab Control Sample Analysis
Batch Quality Control

Project Name: BORDEN AVE
Project Number: 29007

Lab Number: L1009532
Report Date: 07/02/10

Parameter	LCS %Recovery	Qual	LCSD %Recovery	Qual	%Recovery Limits	RPD	Qual	RPD Limits
Volatile Organics by GC/MS - Westborough Lab Associated sample(s): 01 Batch: WG419849-1								
Chloromethane	112		-		1-273	-		30
Bromomethane	95		-		1-242	-		30
Vinyl chloride	88		-		1-251	-		30
Chloroethane	96		-		14-230	-		30
1,1-Dichloroethene	99		-		1-234	-		30
trans-1,2-Dichloroethene	112		-		54-156	-		30
cis-1,2-Dichloroethene	98		-		60-140	-		30
Trichloroethene	106		-		71-157	-		30
1,2-Dichlorobenzene	111		-		18-190	-		30
1,3-Dichlorobenzene	113		-		59-156	-		30
1,4-Dichlorobenzene	110		-		18-190	-		30
p/m-Xylene	110		-		40-160	-		30
o-Xylene	108		-		40-160	-		30
XYLENE (TOTAL)	109		-		40-160	-		30
Styrene	96		-		40-160	-		30
Acetone	81		-		40-160	-		30
Carbon disulfide	98		-		40-160	-		30
2-Butanone	83		-		40-160	-		30
Vinyl acetate	82		-		40-160	-		30
4-Methyl-2-pentanone	86		-		40-160	-		30
2-Hexanone	82		-		40-160	-		30

Lab Control Sample Analysis
Batch Quality Control

Project Name: BORDEN AVE
Project Number: 29007

Lab Number: L1009532
Report Date: 07/02/10

Parameter	LCS %Recovery	Qual	LCSD %Recovery	Qual	%Recovery Limits	RPD	Qual	RPD Limits
Volatile Organics by GC/MS - Westborough Lab Associated sample(s): 01 Batch: WG419849-1								
Acrolein	78		-		40-160	-		30
Acrylonitrile	76		-		40-160	-		30
Dibromomethane	95		-		70-130	-		30

Surrogate	LCS %Recovery	Qual	LCSD %Recovery	Qual	Acceptance Criteria
Pentafluorobenzene	103				80-120
Fluorobenzene	100				80-120
4-Bromofluorobenzene	106				80-120

Matrix Spike Analysis
Batch Quality Control

Project Name: BORDEN AVE
Project Number: 29007

Lab Number: L1009532
Report Date: 07/02/10

Parameter	Native Sample	MS Added	MS Found	MS %Recovery	Qual	MSD Found	MSD %Recovery	Qual	Recovery Limits	RPD	Qual	RPD Limits
Volatile Organics by GC/MS - Westborough Lab Associated sample(s): 01 QC Batch ID: WG419849-3 QC Sample: L1009513-01 Client ID: MS Sample												
Methylene chloride	ND	20	16	80		-	-		1-221	-		30
1,1-Dichloroethane	ND	20	17	87		-	-		59-155	-		30
Chloroform	ND	20	20	98		-	-		51-138	-		30
Carbon tetrachloride	ND	20	21	107		-	-		70-140	-		30
1,2-Dichloropropane	ND	20	19	94		-	-		1-210	-		30
Dibromochloromethane	ND	20	19	96		-	-		53-149	-		30
1,1,2-Trichloroethane	ND	20	18	92		-	-		52-150	-		30
2-Chloroethylvinyl ether	ND	20	16	83		-	-		1-305	-		30
Tetrachloroethene	ND	20	20	102		-	-		64-148	-		30
Chlorobenzene	ND	20	20	100		-	-		37-160	-		30
Trichlorofluoromethane	ND	20	17	84		-	-		17-181	-		30
1,2-Dichloroethane	ND	20	18	91		-	-		49-155	-		30
1,1,1-Trichloroethane	ND	20	20	100		-	-		52-162	-		30
Bromodichloromethane	ND	20	20	100		-	-		35-155	-		30
trans-1,3-Dichloropropene	ND	20	19	93		-	-		17-183	-		30
cis-1,3-Dichloropropene	ND	20	18	92		-	-		1-227	-		30
Bromoform	ND	20	19	94		-	-		45-169	-		30
1,1,2,2-Tetrachloroethane	ND	20	19	95		-	-		46-157	-		30
Benzene	ND	20	18	92		-	-		35-151	-		30
Toluene	ND	20	19	95		-	-		47-150	-		30
Ethylbenzene	ND	20	20	102		-	-		37-162	-		30

Matrix Spike Analysis
Batch Quality Control

Project Name: BORDEN AVE
Project Number: 29007

Lab Number: L1009532
Report Date: 07/02/10

Parameter	Native Sample	MS Added	MS Found	MS %Recovery	Qual	MSD Found	MSD %Recovery	Qual	Recovery Limits	RPD	Qual	RPD Limits
Volatile Organics by GC/MS - Westborough Lab Associated sample(s): 01 QC Batch ID: WG419849-3 QC Sample: L1009513-01 Client ID: MS Sample												
Chloromethane	ND	20	20	102		-	-		1-273	-		30
Bromomethane	ND	20	18	90		-	-		1-242	-		30
Vinyl chloride	ND	20	16	82		-	-		1-251	-		30
Chloroethane	ND	20	17	86		-	-		14-230	-		30
1,1-Dichloroethene	ND	20	18	88		-	-		1-234	-		30
trans-1,2-Dichloroethene	ND	20	23	116		-	-		54-156	-		30
cis-1,2-Dichloroethene	ND	20	18	89		-	-		60-140	-		30
Trichloroethene	ND	20	19	96		-	-		71-157	-		30
1,2-Dichlorobenzene	ND	20	20	98		-	-		18-190	-		30
1,3-Dichlorobenzene	ND	20	20	99		-	-		59-156	-		30
1,4-Dichlorobenzene	ND	20	19	97		-	-		18-190	-		30
p/m-Xylene	ND	40	39	97		-	-		40-160	-		30
o-Xylene	ND	20	19	96		-	-		40-160	-		30
XYLENE (TOTAL)	ND	60	58	97		-	-		40-160	-		30
Styrene	ND	20	17	86		-	-		40-160	-		30
Acetone	ND	50	38	76		-	-		40-160	-		30
Carbon disulfide	ND	20	17	84		-	-		40-160	-		30
2-Butanone	ND	50	37	75		-	-		40-160	-		30
Vinyl acetate	ND	40	30	75		-	-		40-160	-		30
4-Methyl-2-pentanone	ND	50	37	74		-	-		40-160	-		30
2-Hexanone	ND	50	36	73		-	-		40-160	-		30

Matrix Spike Analysis
Batch Quality Control

Project Name: BORDEN AVE
Project Number: 29007

Lab Number: L1009532
Report Date: 07/02/10

Parameter	Native Sample	MS Added	MS Found	MS %Recovery	Qual	MSD Found	MSD %Recovery	Qual	Recovery Limits	RPD	Qual	RPD Limits
Volatile Organics by GC/MS - Westborough Lab Associated sample(s): 01 QC Batch ID: WG419849-3 QC Sample: L1009513-01 Client ID: MS Sample												
Acrolein	ND	40	18	46		-	-		40-160	-		30
Acrylonitrile	ND	40	24	60		-	-		40-160	-		30
Dibromomethane	ND	20	16	78		-	-			-		30

Surrogate	MS % Recovery	MS Qualifier	MSD % Recovery	MSD Qualifier	Acceptance Criteria
4-Bromofluorobenzene	106				80-120
Fluorobenzene	102				80-120
Pentafluorobenzene	101				80-120

Lab Duplicate Analysis
Batch Quality Control

Project Name: BORDEN AVE
Project Number: 29007

Lab Number: L1009532
Report Date: 07/02/10

Parameter	Native Sample	Duplicate Sample	Units	RPD	Qual	RPD Limits
Volatile Organics by GC/MS - Westborough Lab Associated sample(s): 01 QC Batch ID: WG419849-4 QC Sample: L1009513-01 Client ID: DUP Sample						
Methylene chloride	ND	ND	ug/l	NC		30
1,1-Dichloroethane	ND	ND	ug/l	NC		30
Chloroform	ND	ND	ug/l	NC		30
Carbon tetrachloride	ND	ND	ug/l	NC		30
1,2-Dichloropropane	ND	ND	ug/l	NC		30
Dibromochloromethane	ND	ND	ug/l	NC		30
1,1,2-Trichloroethane	ND	ND	ug/l	NC		30
2-Chloroethylvinyl ether	ND	ND	ug/l	NC		30
Tetrachloroethene	ND	ND	ug/l	NC		30
Chlorobenzene	ND	ND	ug/l	NC		30
Trichlorofluoromethane	ND	ND	ug/l	NC		30
1,2-Dichloroethane	ND	ND	ug/l	NC		30
1,1,1-Trichloroethane	ND	ND	ug/l	NC		30
Bromodichloromethane	ND	ND	ug/l	NC		30
trans-1,3-Dichloropropene	ND	ND	ug/l	NC		30
cis-1,3-Dichloropropene	ND	ND	ug/l	NC		30
Bromoform	ND	ND	ug/l	NC		30
1,1,2,2-Tetrachloroethane	ND	ND	ug/l	NC		30
Benzene	ND	ND	ug/l	NC		30

Lab Duplicate Analysis
Batch Quality Control

Project Name: BORDEN AVE
Project Number: 29007

Lab Number: L1009532
Report Date: 07/02/10

Parameter	Native Sample	Duplicate Sample	Units	RPD	RPD Limits
Volatile Organics by GC/MS - Westborough Lab Associated sample(s): 01 QC Batch ID: WG419849-4 QC Sample: L1009513-01 Client ID: DUP Sample					
Toluene	ND	ND	ug/l	NC	30
Ethylbenzene	ND	ND	ug/l	NC	30
Chloromethane	ND	ND	ug/l	NC	30
Bromomethane	ND	ND	ug/l	NC	30
Vinyl chloride	ND	ND	ug/l	NC	30
Chloroethane	ND	ND	ug/l	NC	30
1,1-Dichloroethene	ND	ND	ug/l	NC	30
trans-1,2-Dichloroethene	ND	ND	ug/l	NC	30
cis-1,2-Dichloroethene	ND	ND	ug/l	NC	30
Trichloroethene	ND	ND	ug/l	NC	30
1,2-Dichlorobenzene	ND	ND	ug/l	NC	30
1,3-Dichlorobenzene	ND	ND	ug/l	NC	30
1,4-Dichlorobenzene	ND	ND	ug/l	NC	30
p/m-Xylene	ND	ND	ug/l	NC	30
o-xylene	ND	ND	ug/l	NC	30
Xylene (Total)	ND	ND	ug/l	NC	30
Styrene	ND	ND	ug/l	NC	30
Acetone	ND	ND	ug/l	NC	30
Carbon disulfide	ND	ND	ug/l	NC	30

Lab Duplicate Analysis
Batch Quality Control

Project Name: BORDEN AVE
Project Number: 29007

Lab Number: L1009532
Report Date: 07/02/10

Parameter	Native Sample	Duplicate Sample	Units	RPD	RPD Limits
Volatile Organics by GC/MS - Westborough Lab Associated sample(s): 01 QC Batch ID: WG419849-4 QC Sample: L1009513-01 Client ID: DUP Sample					
2-Butanone	ND	ND	ug/l	NC	30
Vinyl acetate	ND	ND	ug/l	NC	30
4-Methyl-2-pentanone	ND	ND	ug/l	NC	30
2-Hexanone	ND	ND	ug/l	NC	30
Acrolein	ND	ND	ug/l	NC	30
Acrylonitrile	ND	ND	ug/l	NC	30
Dibromomethane	ND	ND	ug/l	NC	30

Surrogate	%Recovery	Qualifier	%Recovery	Qualifier	Acceptance Criteria
Pentafluorobenzene	102		101		80-120
Fluorobenzene	105		102		80-120
4-Bromofluorobenzene	110		105		80-120

SEMIVOLATILES

Project Name: BORDEN AVE
Project Number: 29007

Lab Number: L1009532
Report Date: 07/02/10

SAMPLE RESULTS

Lab ID:	L1009532-01	Date Collected:	06/24/10 07:45
Client ID:	BAINF062410	Date Received:	06/24/10
Sample Location:	2323 BORDEN AVE	Field Prep:	Not Specified
Matrix:	Water	Extraction Method:	EPA 625
Analytical Method:	5,625	Extraction Date:	06/29/10 22:39
Analytical Date:	07/02/10 01:31		
Analyst:	PS		

Parameter	Result	Qualifier	Units	RL	MDL	Dilution Factor
Semivolatile Organics by GC/MS - Westborough Lab						
Naphthalene	ND		ug/l	5.0	--	1

Surrogate	% Recovery	Qualifier	Acceptance Criteria
Nitrobenzene-d5	67		23-120
2-Fluorobiphenyl	60		15-120
4-Terphenyl-d14	74		33-120

Project Name: BORDEN AVE
Project Number: 29007

Lab Number: L1009532
Report Date: 07/02/10

Method Blank Analysis
Batch Quality Control

Analytical Method: 5,625
Analytical Date: 07/01/10 18:33
Analyst: PS

Extraction Method: EPA 625
Extraction Date: 06/29/10 22:39

Parameter	Result	Qualifier	Units	RL	MDL
Semivolatile Organics by GC/MS - Westborough Lab for sample(s): 01 Batch: WG420537-1					
Acenaphthene	ND		ug/l	5.0	--
Benzidine	ND		ug/l	50	--
1,2,4-Trichlorobenzene	ND		ug/l	5.0	--
Hexachlorobenzene	ND		ug/l	5.0	--
Bis(2-chloroethyl)ether	ND		ug/l	5.0	--
2-Chloronaphthalene	ND		ug/l	6.0	--
3,3'-Dichlorobenzidine	ND		ug/l	50	--
2,4-Dinitrotoluene	ND		ug/l	6.0	--
2,6-Dinitrotoluene	ND		ug/l	5.0	--
Azobenzene	ND		ug/l	5.0	--
Fluoranthene	ND		ug/l	5.0	--
4-Chlorophenyl phenyl ether	ND		ug/l	5.0	--
4-Bromophenyl phenyl ether	ND		ug/l	5.0	--
Bis(2-chloroisopropyl)ether	ND		ug/l	5.0	--
Bis(2-chloroethoxy)methane	ND		ug/l	5.0	--
Hexachlorobutadiene	ND		ug/l	10	--
Hexachlorocyclopentadiene	ND		ug/l	30	--
Hexachloroethane	ND		ug/l	5.0	--
Isophorone	ND		ug/l	5.0	--
Naphthalene	ND		ug/l	5.0	--
Nitrobenzene	ND		ug/l	5.0	--
NDPA/DPA	ND		ug/l	15	--
n-Nitrosodi-n-propylamine	ND		ug/l	5.0	--
Bis(2-ethylhexyl)phthalate	ND		ug/l	5.0	--
Butyl benzyl phthalate	ND		ug/l	5.0	--
Di-n-butylphthalate	ND		ug/l	5.0	--
Di-n-octylphthalate	ND		ug/l	5.0	--
Diethyl phthalate	ND		ug/l	5.0	--
Dimethyl phthalate	ND		ug/l	5.0	--
Benzo(a)anthracene	ND		ug/l	5.0	--
Benzo(a)pyrene	ND		ug/l	5.0	--

Project Name: BORDEN AVE
Project Number: 29007

Lab Number: L1009532
Report Date: 07/02/10

Method Blank Analysis
Batch Quality Control

Analytical Method: 5,625
Analytical Date: 07/01/10 18:33
Analyst: PS

Extraction Method: EPA 625
Extraction Date: 06/29/10 22:39

Parameter	Result	Qualifier	Units	RL	MDL
Semivolatile Organics by GC/MS - Westborough Lab for sample(s): 01 Batch: WG420537-1					
Benzo(b)fluoranthene	ND		ug/l	5.0	--
Benzo(k)fluoranthene	ND		ug/l	5.0	--
Chrysene	ND		ug/l	5.0	--
Acenaphthylene	ND		ug/l	5.0	--
Anthracene	ND		ug/l	5.0	--
Benzo(ghi)perylene	ND		ug/l	5.0	--
Fluorene	ND		ug/l	5.0	--
Phenanthrene	ND		ug/l	5.0	--
Dibenzo(a,h)anthracene	ND		ug/l	5.0	--
Indeno(1,2,3-cd)pyrene	ND		ug/l	7.0	--
Pyrene	ND		ug/l	5.0	--
Aniline	ND		ug/l	20	--
4-Chloroaniline	ND		ug/l	5.0	--
1-Methylnaphthalene	ND		ug/l	5.0	--
2-Nitroaniline	ND		ug/l	5.0	--
3-Nitroaniline	ND		ug/l	5.0	--
4-Nitroaniline	ND		ug/l	7.0	--
Dibenzofuran	ND		ug/l	5.0	--
2-Methylnaphthalene	ND		ug/l	5.0	--
n-Nitrosodimethylamine	ND		ug/l	50	--
2,4,6-Trichlorophenol	ND		ug/l	5.0	--
p-Chloro-m-cresol	ND		ug/l	5.0	--
2-Chlorophenol	ND		ug/l	6.0	--
2,4-Dichlorophenol	ND		ug/l	10	--
2,4-Dimethylphenol	ND		ug/l	10	--
2-Nitrophenol	ND		ug/l	20	--
4-Nitrophenol	ND		ug/l	10	--
2,4-Dinitrophenol	ND		ug/l	30	--
4,6-Dinitro-o-cresol	ND		ug/l	20	--
Pentachlorophenol	ND		ug/l	10	--
Phenol	ND		ug/l	7.0	--

Project Name: BORDEN AVE
Project Number: 29007

Lab Number: L1009532
Report Date: 07/02/10

Method Blank Analysis
Batch Quality Control

Analytical Method: 5,625
Analytical Date: 07/01/10 18:33
Analyst: PS

Extraction Method: EPA 625
Extraction Date: 06/29/10 22:39

Parameter	Result	Qualifier	Units	RL	MDL
Semivolatile Organics by GC/MS - Westborough Lab for sample(s): 01 Batch: WG420537-1					
2-Methylphenol	ND		ug/l	6.0	--
3-Methylphenol/4-Methylphenol	ND		ug/l	6.0	--
2,4,5-Trichlorophenol	ND		ug/l	5.0	--
Benzoic Acid	ND		ug/l	50	--
Benzyl Alcohol	ND		ug/l	10	--
Carbazole	ND		ug/l	5.0	--

Surrogate	%Recovery	Qualifier	Acceptance Criteria
2-Fluorophenol	46		21-120
Phenol-d6	30		10-120
Nitrobenzene-d5	84		23-120
2-Fluorobiphenyl	74		15-120
2,4,6-Tribromophenol	89		10-120
4-Terphenyl-d14	87		33-120

Lab Control Sample Analysis
Batch Quality Control

Project Name: BORDEN AVE
Project Number: 29007

Lab Number: L1009532
Report Date: 07/02/10

Parameter	LCS %Recovery	Qual	LCSD %Recovery	Qual	%Recovery Limits	RPD	Qual	RPD Limits
Semivolatile Organics by GC/MS - Westborough Lab Associated sample(s): 01 Batch: WG420537-2								
Acenaphthene	67		-		46-118	-		30
1,2,4-Trichlorobenzene	51		-		39-98	-		30
2-Chloronaphthalene	74		-		40-140	-		30
2,4-Dinitrotoluene	78		-		24-96	-		30
2,6-Dinitrotoluene	74		-		40-140	-		30
Fluoranthene	82		-		40-140	-		30
4-Chlorophenyl phenyl ether	71		-		40-140	-		30
n-Nitrosodi-n-propylamine	79		-		41-116	-		30
Butyl benzyl phthalate	78		-		40-140	-		30
Anthracene	78		-		40-140	-		30
Pyrene	76		-		26-127	-		30
P-Chloro-M-Cresol	78		-		23-97	-		30
2-Chlorophenol	70		-		27-123	-		30
2-Nitrophenol	77		-		30-130	-		30
4-Nitrophenol	33		-		10-80	-		30
2,4-Dinitrophenol	32		-		20-130	-		30
Pentachlorophenol	66		-		9-103	-		30
Phenol	29		-		12-110	-		30

Lab Control Sample Analysis
Batch Quality Control

Project Name: BORDEN AVE
Project Number: 29007

Lab Number: L1009532
Report Date: 07/02/10

Parameter	LCS %Recovery	Qual	LCSD %Recovery	Qual	%Recovery Limits	RPD	Qual	RPD Limits

Semivolatile Organics by GC/MS - Westborough Lab Associated sample(s): 01 Batch: WG420537-2

Surrogate	LCS %Recovery	Qual	LCSD %Recovery	Qual	Acceptance Criteria
2-Fluorophenol	42				21-120
Phenol-d6	29				10-120
Nitrobenzene-d5	75				23-120
2-Fluorobiphenyl	72				15-120
2,4,6-Tribromophenol	74				10-120
4-Terphenyl-d14	76				33-120

Matrix Spike Analysis
Batch Quality Control

Project Name: BORDEN AVE
Project Number: 29007

Lab Number: L1009532
Report Date: 07/02/10

Parameter	Native Sample	MS Added	MS Found	MS %Recovery	Qual	MSD Found	MSD %Recovery	Qual	Recovery Limits	RPD	Qual	RPD Limits
Semivolatile Organics by GC/MS - Westborough Lab Associated sample(s): 01 QC Batch ID: WG420537-3 QC Sample: L1009461-01 Client ID: MS Sample												
Acenaphthene	ND	81.6	53	65		-	-		46-118	-		30
1,2,4-Trichlorobenzene	ND	81.6	38	47		-	-		39-98	-		30
2-Chloronaphthalene	ND	81.6	56	69		-	-		40-140	-		30
2,4-Dinitrotoluene	ND	81.6	58	71		-	-		24-96	-		30
2,6-Dinitrotoluene	ND	81.6	55	67		-	-		40-140	-		30
Fluoranthene	ND	81.6	61	75		-	-		40-140	-		30
4-Chlorophenyl phenyl ether	ND	81.6	54	66		-	-		40-140	-		30
n-Nitrosodi-n-propylamine	ND	81.6	59	72		-	-		41-116	-		30
Butyl benzyl phthalate	ND	81.6	58	71		-	-		40-140	-		30
Anthracene	ND	81.6	59	72		-	-		40-140	-		30
Pyrene	ND	81.6	56	69		-	-		26-127	-		30
P-Chloro-M-Cresol	ND	81.6	63	77		-	-		23-97	-		30
2-Chlorophenol	ND	81.6	55	67		-	-		27-123	-		30
2-Nitrophenol	ND	81.6	55	67		-	-		30-130	-		30
4-Nitrophenol	ND	81.6	41	50		-	-		10-80	-		30
2,4-Dinitrophenol	ND	81.6	ND	22		-	-		20-130	-		30
Pentachlorophenol	ND	81.6	59	72		-	-		9-103	-		30
Phenol	ND	81.6	35	43		-	-		12-110	-		30

Matrix Spike Analysis
Batch Quality Control

Project Name: BORDEN AVE
Project Number: 29007

Lab Number: L1009532
Report Date: 07/02/10

Parameter	Native Sample	MS Added	MS Found	MS %Recovery	Qual	MSD Found	MSD %Recovery	Qual	Recovery Limits	RPD	Qual	RPD Limits

Semivolatile Organics by GC/MS - Westborough Lab Associated sample(s): 01 QC Batch ID: WG420537-3 QC Sample: L1009461-01 Client ID: MS Sample

Surrogate	MS % Recovery	MS Qualifier	MSD % Recovery	MSD Qualifier	Acceptance Criteria
2,4,6-Tribromophenol	78				10-120
2-Fluorobiphenyl	69				15-120
2-Fluorophenol	56				21-120
4-Terphenyl-d14	73				33-120
Nitrobenzene-d5	73				23-120
Phenol-d6	48				10-120

Project Name: BORDEN AVE
Project Number: 29007

Lab Duplicate Analysis
Batch Quality Control

Lab Number: L1009532
Report Date: 07/02/10

Parameter	Native Sample	Duplicate Sample	Units	RPD	Qual	RPD Limits
Semivolatile Organics by GC/MS - Westborough Lab Associated sample(s): 01 QC Batch ID: WG420537-4 QC Sample: L1009461-01 Client ID: DUP Sample						
Acenaphthene	ND	ND	ug/l	NC		30
Benzidine	ND	ND	ug/l	NC		30
1,2,4-Trichlorobenzene	ND	ND	ug/l	NC		30
Hexachlorobenzene	ND	ND	ug/l	NC		30
Bis(2-chloroethyl)ether	ND	ND	ug/l	NC		30
2-Chloronaphthalene	ND	ND	ug/l	NC		30
3,3'-Dichlorobenzidine	ND	ND	ug/l	NC		30
2,4-Dinitrotoluene	ND	ND	ug/l	NC		30
2,6-Dinitrotoluene	ND	ND	ug/l	NC		30
Azobenzene	ND	ND	ug/l	NC		30
Fluoranthene	ND	ND	ug/l	NC		30
4-Chlorophenyl phenyl ether	ND	ND	ug/l	NC		30
4-Bromophenyl phenyl ether	ND	ND	ug/l	NC		30
Bis(2-chloroisopropyl)ether	ND	ND	ug/l	NC		30
Bis(2-chloroethoxy)methane	ND	ND	ug/l	NC		30
Hexachlorobutadiene	ND	ND	ug/l	NC		30
Hexachlorocyclopentadiene	ND	ND	ug/l	NC		30
Hexachloroethane	ND	ND	ug/l	NC		30
Isophorone	ND	ND	ug/l	NC		30

Lab Duplicate Analysis
Batch Quality Control

Project Name: BORDEN AVE
Project Number: 29007

Lab Number: L1009532
Report Date: 07/02/10

Parameter	Native Sample	Duplicate Sample	Units	RPD	RPD Limits
Semivolatile Organics by GC/MS - Westborough Lab Associated sample(s): 01 QC Batch ID: WG420537-4 QC Sample: L1009461-01 Client ID: DUP Sample					
Naphthalene	ND	ND	ug/l	NC	30
Nitrobenzene	ND	ND	ug/l	NC	30
NDPA/DPA	ND	ND	ug/l	NC	30
n-Nitrosodi-n-propylamine	ND	ND	ug/l	NC	30
Bis(2-ethylhexyl)phthalate	ND	ND	ug/l	NC	30
Butyl benzyl phthalate	ND	ND	ug/l	NC	30
Di-n-butylphthalate	ND	ND	ug/l	NC	30
Di-n-octylphthalate	ND	ND	ug/l	NC	30
Diethyl phthalate	ND	ND	ug/l	NC	30
Dimethyl phthalate	ND	ND	ug/l	NC	30
Benzo(a)anthracene	ND	ND	ug/l	NC	30
Benzo(a)pyrene	ND	ND	ug/l	NC	30
Benzo(b)fluoranthene	ND	ND	ug/l	NC	30
Benzo(k)fluoranthene	ND	ND	ug/l	NC	30
Chrysene	ND	ND	ug/l	NC	30
Acenaphthylene	ND	ND	ug/l	NC	30
Anthracene	ND	ND	ug/l	NC	30
Benzo(ghi)perylene	ND	ND	ug/l	NC	30
Fluorene	ND	ND	ug/l	NC	30

Project Name: BORDEN AVE
Project Number: 29007

Lab Duplicate Analysis
Batch Quality Control

Lab Number: L1009532
Report Date: 07/02/10

Parameter	Native Sample	Duplicate Sample	Units	RPD	RPD Limits
Semivolatile Organics by GC/MS - Westborough Lab Associated sample(s): 01 QC Batch ID: WG420537-4 QC Sample: L1009461-01 Client ID: DUP Sample					
Phenanthrene	ND	ND	ug/l	NC	30
Dibenzo(a,h)anthracene	ND	ND	ug/l	NC	30
Indeno(1,2,3-cd)pyrene	ND	ND	ug/l	NC	30
Pyrene	ND	ND	ug/l	NC	30
Aniline	ND	ND	ug/l	NC	30
4-Chloroaniline	ND	ND	ug/l	NC	30
1-Methylnaphthalene	ND	ND	ug/l	NC	30
2-Nitroaniline	ND	ND	ug/l	NC	30
3-Nitroaniline	ND	ND	ug/l	NC	30
4-Nitroaniline	ND	ND	ug/l	NC	30
Dibenzofuran	ND	ND	ug/l	NC	30
2-Methylnaphthalene	ND	ND	ug/l	NC	30
n-Nitrosodimethylamine	ND	ND	ug/l	NC	30
2,4,6-Trichlorophenol	ND	ND	ug/l	NC	30
p-Chloro-m-cresol	ND	ND	ug/l	NC	30
2-Chlorophenol	ND	ND	ug/l	NC	30
2,4-Dichlorophenol	ND	ND	ug/l	NC	30
2,4-Dimethylphenol	ND	ND	ug/l	NC	30
2-Nitrophenol	ND	ND	ug/l	NC	30

Lab Duplicate Analysis
Batch Quality Control

Project Name: BORDEN AVE
Project Number: 29007

Lab Number: L1009532
Report Date: 07/02/10

Parameter	Native Sample	Duplicate Sample	Units	RPD	RPD Limits
Semivolatile Organics by GC/MS - Westborough Lab Associated sample(s): 01 QC Batch ID: WG420537-4 QC Sample: L1009461-01 Client ID: DUP Sample					
4-Nitrophenol	ND	ND	ug/l	NC	30
2,4-Dinitrophenol	ND	ND	ug/l	NC	30
4,6-Dinitro-o-cresol	ND	ND	ug/l	NC	30
Pentachlorophenol	ND	ND	ug/l	NC	30
Phenol	ND	ND	ug/l	NC	30
2-Methylphenol	ND	ND	ug/l	NC	30
3-Methylphenol/4-Methylphenol	ND	ND	ug/l	NC	30
2,4,5-Trichlorophenol	ND	ND	ug/l	NC	30
Benzoic Acid	ND	ND	ug/l	NC	30
Benzyl Alcohol	ND	ND	ug/l	NC	30
Carbazole	ND	ND	ug/l	NC	30

Surrogate	%Recovery	Qualifier	%Recovery	Qualifier	Acceptance Criteria
2-Fluorophenol	41		64		21-120
Phenol-d6	28		53		10-120
Nitrobenzene-d5	73		82		23-120
2-Fluorobiphenyl	68		74		15-120
2,4,6-Tribromophenol	73		81		10-120
4-Terphenyl-d14	75		77		33-120

Lab Duplicate Analysis
Batch Quality Control

Project Name: BORDEN AVE
Project Number: 29007

Lab Number: L1009532
Report Date: 07/02/10

Parameter	Native Sample	Duplicate Sample	Units	RPD	RPD Limits
Semivolatile Organics by GC/MS - Westborough Lab Associated sample(s): 01 QC Batch ID: WG420537-4 QC Sample: L1009461-01 Client ID: DUP Sample					

Surrogate	%Recovery	Qualifier	%Recovery	Qualifier	Acceptance Criteria

INORGANICS
&
MISCELLANEOUS

Project Name: BORDEN AVE
Project Number: 29007

Lab Number: L1009532
Report Date: 07/02/10

SAMPLE RESULTS

Lab ID: L1009532-01
Client ID: BAINF062410
Sample Location: 2323 BORDEN AVE
Matrix: Water

Date Collected: 06/24/10 07:45
Date Received: 06/24/10
Field Prep: Not Specified

Parameter	Result	Qualifier	Units	RL	MDL	Dilution Factor	Date Prepared	Date Analyzed	Analytical Method	Analyst
General Chemistry - Westborough Lab										
pH (H)	7.5		SU	-	NA	1	-	06/24/10 23:40	30,4500H+-B	BH

Lab Control Sample Analysis
Batch Quality Control

Project Name: BORDEN AVE
Project Number: 29007

Lab Number: L1009532
Report Date: 07/02/10

Parameter	LCS %Recovery	Qual	LCSD %Recovery	Qual	%Recovery Limits	RPD	Qual	RPD Limits
General Chemistry - Westborough Lab	Associated sample(s): 01		Batch: WG419821-1					
pH	100		-		99-101	-		5

Project Name: BORDEN AVE
Project Number: 29007

Lab Duplicate Analysis
Batch Quality Control

Lab Number: L1009532
Report Date: 07/02/10

Parameter	Native Sample	Duplicate Sample	Units	RPD	Qual	RPD Limits
General Chemistry - Westborough Lab Associated sample(s): 01 QC Batch ID: WG419821-2 QC Sample: L1009502-01 Client ID: DUP Sample						
pH (H)	10.4	10	SU	0		5

Project Name: BORDEN AVE
Project Number: 29007

Lab Number: L1009532
Report Date: 07/02/10

Sample Receipt and Container Information

Were project specific reporting limits specified? YES

Reagent H2O Preserved Vials Frozen on: NA

Cooler Information Custody Seal

Cooler	
A	Absent

Container Information

Container ID	Container Type	Cooler	pH	Temp deg C	Pres	Seal	Analysis(*)
L1009532-01A	Vial HCl preserved	A	N/A	2.6	Y	Absent	624(7)
L1009532-01B	Vial HCl preserved	A	N/A	2.6	Y	Absent	624(7)
L1009532-01C	Amber 1000ml unpreserved	A	7	2.6	Y	Absent	625(7)
L1009532-01D	Amber 1000ml unpreserved	A	7	2.6	Y	Absent	625(7)
L1009532-01E	Plastic 250ml unpreserved split	A	7	2.6	Y	Absent	PH-4500(.01)

*Values in parentheses indicate holding time in days

Project Name:	BORDEN AVE	**Lab Number:**	L1009532
Project Number:	29007	**Report Date:**	07/02/10

GLOSSARY

Acronyms

EPA - Environmental Protection Agency.

LCS - Laboratory Control Sample: A sample matrix, free from the analytes of interest, spiked with verified known amounts of analytes or a material containing known and verified amounts of analytes.

LCSD - Laboratory Control Sample Duplicate: Refer to LCS.

MDL - Method Detection Limit: This value represents the level to which target analyte concentrations are reported as estimated values, when those target analyte concentrations are quantified below the reporting limit (RL). The MDL includes any adjustments from dilutions, concentrations or moisture content, where applicable.

MS - Matrix Spike Sample: A sample prepared by adding a known mass of target analyte to a specified amount of matrix sample for which an independent estimate of target analyte concentration is available.

MSD - Matrix Spike Sample Duplicate: Refer to MS.

NA - Not Applicable.

NC - Not Calculated: Term is utilized when one or more of the results utilized in the calculation are non-detect at the parameter's reporting unit.

NI - Not Ignitable.

RL - Reporting Limit: The value at which an instrument can accurately measure an analyte at a specific concentration. The RL includes any adjustments from dilutions, concentrations or moisture content, where applicable.

RPD - Relative Percent Difference: The results from matrix and/or matrix spike duplicates are primarily designed to assess the precision of analytical results in a given matrix and are expressed as relative percent difference (RPD). Values which are less than five times the reporting limit for any individual parameter are evaluated by utilizing the absolute difference between the values; although the RPD value will be provided in the report.

Terms

Analytical Method: Both the document from which the method originates and the analytical reference method. (Example: EPA 8260B is shown as 1,8260B.) The codes for the reference method documents are provided in the References section of the Addendum.

Data Qualifiers

A - Spectra identified as "Aldol Condensation Product".

B - The analyte was detected above the reporting limit in the associated method blank. Flag only applies to associated field samples that have detectable concentrations of the analyte at less than five times (5x) the concentration found in the blank. For MCP-related projects, flag only applies to associated field samples that have detectable concentrations of the analyte at less than ten times (10x) the concentration found in the blank. For DOD-related projects, flag only applies to associated field samples that have detectable concentrations of the analyte at less than ten times (10x) the concentration found in the blank AND the analyte was detected above one-half the reporting limit (or above the reporting limit for common lab contaminants) in the associated method blank.

D - Concentration of analyte was quantified from diluted analysis. Flag only applies to field samples that have detectable concentrations of the analyte.

E - Concentration of analyte exceeds the range of the calibration curve and/or linear range of the instrument.

H - The analysis of pH was performed beyond the regulatory-required holding time of 15 minutes from the time of sample collection.

P - The RPD between the results for the two columns exceeds the method-specified criteria.

Q - The quality control sample exceeds the associated acceptance criteria. Note: This flag is not applicable for matrix spike recoveries when the sample concentration is greater than 4x the spike added or for batch duplicate RPD when the sample concentrations are less than 5x the RL. (Metals only.)

R - Analytical results are from sample re-analysis.

RE - Analytical results are from sample re-extraction.

Report Format: Data Usability Report

Project Name:	BORDEN AVE	**Lab Number:**	L1009532
Project Number:	29007	**Report Date:**	07/02/10

Data Qualifiers

J - Estimated value. This represents an estimated concentration for Tentatively Identified Compounds (TICs).
ND - Not detected at the reporting limit (RL) for the sample.

Report Format: Data Usability Report

Project Name: BORDEN AVE
Project Number: 29007

Lab Number: L1009532
Report Date: 07/02/10

REFERENCES

5 Methods for the Organic Chemical Analysis of Municipal and Industrial Wastewater. Appendix A, Part 136, 40 CFR (Code of Federal Regulations).

30 Standard Methods for the Examination of Water and Wastewater. APHA-AWWA-WPCF. 18th Edition. 1992.

LIMITATION OF LIABILITIES

Alpha Analytical performs services with reasonable care and diligence normal to the analytical testing laboratory industry. In the event of an error, the sole and exclusive responsibility of Alpha Analytical shall be to re-perform the work at it's own expense. In no event shall Alpha Analytical be held liable for any incidental, consequential or special damages, including but not limited to, damages in any way connected with the use of, interpretation of, information or analysis provided by Alpha Analytical.

We strongly urge our clients to comply with EPA protocol regarding sample volume, preservation, cooling, containers, sampling procedures, holding time and splitting of samples in the field.

Certificate/Approval Program Summary

Last revised June 17, 2010 - Westboro Facility

The following list includes only those analytes/methods for which certification/approval is currently held.
For a complete listing of analytes for the referenced methods, please contact your Alpha Customer Service Representative.

Connecticut Department of Public Health Certificate/Lab ID: PH-0574. ***NELAP Accredited Solid Waste/Soil.***

Drinking Water (Inorganic Parameters: Color, pH, Turbidity, Conductivity, Alkalinity, Chloride, Free Residual Chlorine, Fluoride, Calcium Hardness, Sulfate, Nitrate, Nitrite, Aluminum, Antimony, Arsenic, Barium, Beryllium, Cadmium, Calcium, Chromium, Copper, Iron, Lead, Magnesium, Manganese, Mercury, Molybdenum, Nickel, Potassium, Selenium, Silver, Sodium, Thallium, Vanadium, Zinc, Total Dissolved Solids, Total Organic Carbon, Total Cyanide, Perchlorate. Organic Parameters: Haloacetic Acids, Volatile Organics 524.2, Total Trihalomethanes 524.2, 1,2-Dibromo-3-chloropropane (DBCP), Ethylene Dibromide (EDB).)
Wastewater/Non-Potable Water (Inorganic Parameters: Color, pH, Conductivity, Acidity, Alkalinity, Chloride, Total Residual Chlorine, Fluoride, Total Hardness, Calcium Hardness, Silica, Sulfate, Sulfide, Ammonia, Kjeldahl Nitrogen, Nitrate, Nitrite, O-Phosphate, Total Phosphorus, Aluminum, Antimony, Arsenic, Barium, Beryllium, Boron, Cadmium, Calcium, Chromium, Hexavalent Chromium, Cobalt, Copper, Iron, Lead, Magnesium, Manganese, Mercury, Molybdenum, Nickel, Potassium, Selenium, Silver, Sodium, Strontium, Thallium, Tin, Titanium, Vanadium, Zinc, Total Residue (Solids), Total Dissolved Solids, Total Suspended Solids (non-filterable), BOD, CBOD, COD, TOC, Total Cyanide, Phenolics, Foaming Agents (MBAS), Bromide, Oil and Grease. Organic Parameters: PCBs, Organochlorine Pesticides, Technical Chlordane, Toxaphene, 2,4-D, 2,4,5-T, 2,4,5-TP(Silvex), Acid Extractables (Phenols), Benzidines, Phthalate Esters, Nitrosamines, Nitroaromatics & Isophorone, Polynuclear Aromatic Hydrocarbons, Haloethers, Chlorinated Hydrocarbons, Volatile Organics, Extractable Petroleum Hydrocarbons (ETPH), MA-EPH, MA-VPH.)
Solid Waste/Soil (Inorganic Parameters: Lead in Paint, pH, Aluminum, Antimony, Arsenic, Barium, Beryllium, Boron, Cadmium, Calcium, Chromium, Hexavalent Chromium, Cobalt, Copper, Iron, Lead, Magnesium, Manganese, Mercury, Molybdenum, Nickel, Potassium, Selenium, Silver, Sodium, Thallium, Tin, Vanadium, Zinc, Total Cyanide, Ignitability, Phenolics, Corrosivity, TCLP Leach (1311), Reactivity. Organic Parameters: PCBs, Organochlorine Pesticides, Technical Chlordane, Toxaphene, Extractable Petroleum Hydrocarbons (ETPH), MA-EPH, MA-VPH, Dicamba, 2,4-D, 2,4,5-T, 2,4,5-TP(Silvex), Volatile Organics, Acid Extractables (Phenols), 3.3'-Dichlorobenzidine, Phthalates, Nitrosamines, Nitroaromatics & Cyclic Ketones, PAHs, Haloethers, Chlorinated Hydrocarbons.)

Maine Department of Human Services Certificate/Lab ID: 2009024.
Drinking Water (Inorganic Parameters: SM9215B, 9221E, 9222B, 9222D, 9223B, EPA 180.1, 300.0, 353.2, SM2130B, 2320B, 4500Cl-D, 4500CN-C, 4500CN-E, 4500F-C, 4500H+B,4500NO3-F, EPA 200.7, EPA 200.8, 245.1. Organic Parameters: 504.1, 524.2, SM 6251B.)
Wastewater/Non-Potable Water (Inorganic Parameters: EPA 120.1, 1664A, 350.1, 351.1, 353.2, 410.4, 420.1, Lachat 10-107-06-1-B, SM2320B, 2340B, 2510B, 2540C, 2540D, 426C, 4500Cl-D, 4500Cl-E, 4500CN-C, 4500CN-E, 4500F-B, 4500F-C, 4500H+B, 4500Norg-B, 4500Norg-C, 4500NH3-B, 4500NH3-G, 4500NH3-H, 4500NO3-F, 4500P-B.5, 4500P-E, 5210B, 5220D, 5310C, EPA 200.7, 200.8, 245.1. Organic Parameters: 608, 624.)

Massachusetts Department of Environmental Protection Certificate/Lab ID: M-MA086.
Drinking Water
Inorganic Parameters: (EPA 200.8 for: Sb,As,Ba,Be,Cd,Cr,Cu,Pb,Ni,Se,Tl)
(EPA 200.7 for: Ba,Be,Ca,Cd,Cr,Cu,Na,Ni) 245.1, (300.0 for: Nitrate-N, Fluoride, Sulfate)
353.2 for: Nitrate-N, Nitrite-N; SM4500NO3-F, 4500F-C, 4500CN-CE, EPA 180.1, SM2130B, SM4500Cl-D, 2320B, SM2540C, SM4500H-B.
Organic Parameters: (EPA 524.2 for: Trihalomethanes, Volatile Organics)
(504.1 for: 1,2-Dibromoethane, 1,2-Dibromo-3-Chloropropane), 314.0, 332.
Microbiology Parameters: SM9215B; ENZ. SUB. SM9223; MF-SM9222D
Non-Potable Water
Inorganic Parameters:, (EPA 200.8 for: Al,Sb,As,Be,Cd,Cr,Cu,Pb,Mn,Ni,Se,Ag,Tl,Zn)
(EPA 200.7 for: Al,Sb,As,Be,Cd,Cr,Co,Cu,Fe,Pb,Mn,Mo,Ni,Se,Ag,Sr,Ti,Tl, V,Zn,Ca,Mg,Na,K)
245.1, SM4500H,B, EPA 120.1, SM2510B, 2540C, 2540B, 2340B, 2320B, 4500CL-E, 4500F-BC, 426C, SM4500NH3-BH, (EPA 350.1 for: Ammonia-N), LACHAT 10-107-06-1-B for Ammonia-N, SM4500NO3-F, 353.2 for Nitrate-N, SM4500NH3-B,C-Titr, SM4500NH3-BC-NES, EPA 351.1, SM4500P-E, 4500P-B,E, 5220D, EPA 410.4, SM 5210B, 5310C, 4500CL-D, EPA 1664, SM14 510AC, EPA 420, SM4500-CN-CE, SM2540D.
Organic Parameters: (EPA 624 for Volatile Halocarbons, Volatile Aromatics)
(608 for: Chlordane, Aldrin, Dieldrin, DDD, DDE, DDT, Heptachlor, Heptachlor Epoxide, PCBs-Water), EPA 625 for SVOC Acid Extractables and SVOC Base/Neutral Extractables, 600/4-81-045-PCB-Oil

New Hampshire Department of Environmental Services Certificate/Lab ID: 200307. ***NELAP Accredited.***
Drinking Water (Inorganic Parameters: SM6215B, 9222B, 9223B Colilert, EPA 200.7, 200.8, 245.2, 120.1, 300.0, 314.0, SM4500CN-E, 4500H+B, 4500NO3-F, 2320B, 2510B, 2540C, 4500F-C, 5310C, 2120B, EPA 331.0. Organic Parameters: 504.1, 524.2, SM6251B.)
Non-Potable Water (Inorganic Parameters: SM9222D, 9221B, 9222B, 9221E-EC, EPA 200.7, 200.8, 245.1, 245.2, SW-846 6010B, 6020, 7196A, 7470A, SM3500-CR-D, EPA 120.1, 300.0, 350.1, 351.1, 353.2, 420.1, 1664A, SW-846 9010, 9030, 9040B, SM426C, SM2310B, 2540B, 2540D, 4500H+B, 4500NH3-H, 4500NH3-E, 4500NO2-B, 4500P-E, 4500-S2-D, 5210B, 2320B, 2540C, 4500F-C, 5310C, 5540C, LACHAT 10-117-07-1-B, LACHAT 10-107-06-1-B, LACHAT 10-107-04-1-C, LACHAT 10-107-04-1-J, LACHAT 10-117-07-1-A, SM4500CL-E, LACHAT 10-204-00-1-A, LACHAT 10-107-06-2-D. Organic Parameters: SW-846 3005A, 3015A, 3510C, 5030B, 8021B, 8260B, 8270C, 8330, EPA 624, 625, 608, SW-846 8082, 8081A.)
Solid & Chemical Materials (Inorganic Parameters: SW-846 6010B, 7196A, 7471A, 7.3.3.2, 7.3.4.2, 1010, 1030, 9010, 9012A, 9014, 9030B, 9040, 9045C, 9050C, 1311, 3005A, 3050B, 3051A. Organic Parameters: SW-846 3540C, 3545, 3580A, 5030B, 5035, 8021B, 8260B, 8270C, 8330, 8151A, 8082, 8081A.)

New Jersey Department of Environmental Protection Certificate/Lab ID: MA935. ***NELAP Accredited.***
Drinking Water (Inorganic Parameters: SM9222B, 9221E, 9223B, 9215B, 4500NO3-F, 4500F-C, EPA 300.0, 200.7, 2540C, 2320B, 314.0, SM2120B, 2510B, 5310C, SM4500H-B, EPA 200.8, 245.2. Organic Parameters: 504.1, SM6251B, 524.2.)
Non-Potable Water (Inorganic Parameters: SM5210B, EPA 410.4, SM5220D, 4500Cl-D, EPA 300.0, SM2120B, SM4500F-BC, EPA 200.7, 351.1, LACHAT 10-107-06-2-D, EPA 353.2, SM4500NO3-F, 4500NO2-B, EPA 1664A, SM5310B, C or D, 4500-PE, EPA 420.1, SM4500P-B5+E, 2540B, 2540C, 2540D, EPA 120.1, SM2510B, SM15 426C, SM9221CE, 9222D, 9221B, 9222B, 9215B, 2310B, 2320B, 4500NH3-H, 4500-S D, EPA 350.1, SM5210B, SW-846 3015, 6020, 7470A, 5540C, 4500H-B, EPA 200.8, SM3500Cr-D, EPA 245.1, 245.2, SW-846 9040B, 3005A, EPA 6010B, 7196A, SW-846 9010B, 9030B. Organic Parameters: SW-846 8260B, 8270C, 3510C, EPA 608, 624, 625, SW-846 5030B, 8021B, 8081A, 8082, 8151A, 8330, NJ OQA-QAM-025 Rev.7.)
Solid & Chemical Materials (Inorganic Parameters: SW-846 9040B, 3005A, 6010B, 7196A, 5030B, 9010B, 9030B, 1030, 1311, 3050B, 3051, 7471A, 9014, 9012A, 9045C, 9050A, 9065. Organic Parameters: SW-846 8021B, 8081A, 8082, 8151A, 8330, 8260B, 8270C, 1311, 1312, 3540C, 3545, 3550B, 3580A, 5035L, 5035H, NJ OQA-QAM-025 Rev.7.)

New York Department of Health Certificate/Lab ID: 11148. ***NELAP Accredited.***
Drinking Water (Inorganic Parameters: SM9223B, 9222B, 9215B, EPA 200.8, 200.7, 245.2, SM5310C, EPA 314.0, 332.0, SM2320B, EPA 300.0, SM2120B, 4500CN-E, 4500F-C, 4500H-B, 4500NO3-F, 2540C, EPA 120.1, SM 2510B. Organic Parameters: EPA 524.2, 504.1.)
Non-Potable Water (Inorganic Parameters: SM9221E, 9222D, 9221B, 9222B, 9215B, 5210B, EPA 410.4, SM5220D, 2310B-4a, 2320B, EPA 200.7, 300.0, LACHAT 10-117-07-1A or B, SM4500Cl-E, 4500F-C, SM15 426C, EPA 350.1, LACHAT 10-107-06-1-B, SM4500NH3-H, EPA 351.1, LACHAT 10-107-06-2, EPA 353.2, LACHAT 10-107-041-C, SM4500-NO3-F, 4500-NO2-B, 4500P-E, 2540C, 2540B, 2540D, EPA 200.8, EPA 6010B, 6020, EPA 7196A, S\M3500Cr-D, EPA 245.1, 245.2, 7470A, SM2120B, SM4500-CN-E LACHAT 10-204-00-1-A, EPA 9040B, SM4500-HB, EPA 1664A, SM5310C, EPA 420.1, SM14 510C, EPA 120.1, SM2510B, SM4500S-D, SM5540C, EPA 3005A, 3015. Organic Parameters: EPA 624, 8260B, 8270C, 625, 608, 8081A, 8151A, 8330, 8082, EPA 3510C, 5030B, 9010B, 9030B.)
Solid & Hazardous Waste (Inorganic Parameters: 1010, 1030, SW-846 Ch 7 Sec 7.3, EPA 6010B, 7196A, 7471A, 9012A, 9014, 9040B, 9045C, 9065, 9050, EPA 1311, 1312, 3005A, 3050B, 9010B, 9030B. Organic Parameters: EPA 8260B, 8270C, 8081A, 8151A, 8330, 8082, 3540C, 3545, 3546, 3580, 5030B, 5035.)

North Carolina Department of the Environment and Natural Resources Certificate/Lab ID : 666. Organic Parameters: MA-EPH, MA-VPH.

Pennsylvania Department of Environmental Protection Certificate/Lab ID : 68-03671. ***NELAP Accredited.***
Non-Potable Water (Organic Parameters: EPA 3510C, 5030B, 625, 624. 608, 8081A, 8082, 8151A, 8260B, 8270C, 8330)
Solid & Hazardous Waste (Inorganic Parameters: EPA 1010, 1030, 1311, 3050B, 3051, 6010B, EPA 7.3.3.2, EPA 7.3.4.2, 7196A, 7471A, 9010B, 9012A, 9014, 9040B, 9045C, 9050, 9065. Organic Parameters: 3540C, 3545, 3580A, 5035, 8021B, 8081A, 8082, 8151A, 8260B, 8270C, 8330)

Rhode Island Department of Health Certificate/Lab ID: LAO00065. ***NELAP Accredited via NY-DOH.***
Refer to MA-DEP Certificate for Potable and Non-Potable Water.
Refer to NY-DOH Certificate for Potable and Non-Potable Water.

Texas Commisson on Environmental Quality Certificate/Lab ID: T104704476-09-1. ***NELAP Accredited.***
Non-Potable Water (Inorganic Parameters: EPA 120.1, 1664, 200.7, 200.8, 245.1, 245.2, 300.0, 350.1, 351.1, 353.2, 376.2, 410.4, 420.1, 6010, 6020, 7196, 7470, 9040, SM 2120B, 2310B, 2320B, 2510B, 2540B, 2540C, 2540D, 426C, 4500CL-E, 4500CN-E, 4500F-C, 4500H+B, 4500NH3-H, 4500NO2B, 4500P-E, 4500 $S2^-$ D, 510C, 5210B, 5220D, 5310C, 5540C. Organic Parameters: EPA 608, 624, 625, 8081, 8082, 8151, 8260, 8270, 8330.)

Solid & Hazardous Waste (Inorganic Parameters: EPA 1311, 1312, 9012, 9014, 9040, 9045, 9050, 9065.)

Department of Defense Certificate/Lab ID: L2217.
Drinking Water (Inorganic Parameters: SM 4500H-B. Organic Parameters: EPA 524.2, 504.1.)

Non-Potable Water (Inorganic Parameters: EPA 200.7, 200.8, 6010B, 6020, 245.1, 245.2, 7470A, 9040B, 300.0, 9251, 9038, 350.1, 353.2, 351.1, 314, 120.1, 9050A , 410.4, 9060, 1664, 420.1, LACHAT 10-107-06-1-B, SM 4500CN-E, 4500H-B, 4500CL-E, 4500F-BC, 4500SO4-E, 426C, 4500NH3-B, 4500NH3-H, 4500NO3-F, 4500NO2-B, 4500Norg-C, 4500PE, 2510B, 5540C, 5220D, 5310C, 2540B, 2540C, 2540D, 510C, 4500S2-AD, 3005A, 3015, 9010B, 9030B. Organic Parameters: EPA 8260B, 8270C, 8330, 625, 8082, 8151A, 8081A, 3510C, 5030B, MassDEP EPH, MassDEP VPH.)

Solid & Hazardous Waste (Inorganic Parameters: EPA 200.7, 6010B, 7471A, 9040B, 9045C, 9065, 420.1, 9012A, 6860, 1311, 1312, 3050B, 9030B, 3051, 9010B, 3540C, SM 510ABC, 4500CN-CE, 2540G, SW-846 7.3, Organic Parameters: EPA 8260B, 8270C, 8330, 8082, 8081A, 8151A, 3545, 3546, 3580, 5035, MassDEP EPH, MassDEP VPH.)

Analytes Not Accredited by NELAP
Certification is not available by NELAP for the following analytes: **EPA 8260B:** Freon-113, 1,2,4,5-Tetramethylbenzene, 4-Ethyltoluene. **EPA 8330A:** PETN, Picric Acid, Nitroglycerine, 2,6-DANT, 2,4-DANT. **EPA 8270C:** Methyl naphthalene, Dimethyl naphthalene, Total Methylnapthalenes, Total Dimethylnaphthalenes, 1,4-Diphenylhydrazine (Azobenzene). **EPA 625:** 4-Chloroaniline. **EPA 350.1** for Ammonia in a Soil matrix.

CHAIN OF CUSTODY

PAGE 1 OF 1

Date Rec'd in Lab: 6/24/10

ALPHA Job #: L1009532

ALPHA ANALYTICAL
WESTBORO, MA TEL: 508-898-9220 FAX: 508-898-9193
MANSFIELD, MA TEL: 508-822-9300 FAX: 508-822-3288

Serial No:07021011:38

Client Information

Client: EPM Inc
Address: 1983 Marcus Ave Sh09
Lake Success, NY 11042
Phone: 516-328-1194
Fax: 516-328-1381
Email: rhart@epmco.com
☐ These samples have been previously analyzed by Alpha

Project Information

Project Name: Borden Ave
Project Location: 2323 Borden Ave
Project #: 2907
Project Manager: Rick Hart
ALPHA Quote #:

Turn-Around Time

☒ Standard ☐ RUSH (only confirmed if pre-approved)
Date Due: 7/1/10 Time: 1 Week

Report Information - Data Deliverables

☒ FAX ☐ EMAIL
☐ ADEx ☐ Add'l Deliverables

Billing Information

☒ Same as Client info PO #:

Regulatory Requirements/Report Limits

State /Fed Program	Criteria
NYSDEC	

Other Project Specific Requirements/Comments/Detection Limits:
* 7 day TAT
* Please email Results to rhart@epmco.com

ALPHA Lab ID (Lab Use Only)	Sample ID	Collection Date	Collection Time	Sample Matrix	Sampler's Initials	BTEX 624	MTBE 624	Naphthalene 625	PH	Sample Specific Comments
09532-1	BAINFC062410	6/24/10	745	W	SC	X	X	X	X	

SAMPLE HANDLING
Filtration
☐ Done
☒ Not needed
☐ Lab to do
Preservation
☐ Lab to do
(Please specify below)

TOTAL # BOTTLES: 4

Container Type	V	V	A	A
Preservative	HCL			

Relinquished By:	Date/Time	Received By:	Date/Time
S. Charepany	6/24/10 1025		6/24/10 1025
	6/24/10 1645		6/24/10 1645
	6/24/10 2145		6/24/10 2145

Please print clearly, legibly and completely. Samples can not be logged in and turnaround time clock will not start until any ambiguities are resolved. All samples submitted are subject to Alpha's Terms and Conditions. See reverse side.

FORM NO: 01-01 (rev. 14-OCT-07)