PHOENIX PRODUCTION COMPANY

225 WEST YELLOWSTONE AVE. ■ P.O. BOX 2653 ■ CODY, WYOMING 82414 ■ 307-587-6440 ■ FAX 307-587-6450

RECEIVED
MAR 24 2010
Wastewater Unit

March 23, 2010

Water Permits Unit (8P-W-WW)
U.S. EPA, Region 8
1595 Wynkoop Street
Denver, CO 80202-1129

RE: NPDES Permit Renewal Applications for Sheldon Dome (Permit #WY-0024953) and Rolff Lake (Permit #WY-0024945), Wind River Indian Reservation, Wyoming

Dear EPA Employee:

Enclosed, please find Phoenix Production Company's permit applications, associated with renewal of the NPDES permits for the above referenced facilities. Specifically, enclosed are Form 1, Form 1 – Supplemental Information, Form 2C, Beneficial Use Documentation, and Water Management Plans for each facility. Also enclosed, are Beneficial Use Letters from grazing lessees, as well as a copy of a letter to Mr. Don Aragon (Wind River Environmental Quality Commission), requesting approval of the Water Management Plans and certification of the Beneficial Use Letters.

Phoenix requests the EPA to increase the upper pH limit on both the Sheldon Dome and Rolff Lake permits from the current 8.5 standard units to 9.0 standard units. This increase in the upper pH limit would make the permits consistent with Wyoming Water Quality Standards contained in both Chapter #1 and Chapter #2 of the Wyoming Department of Environmental Quality Rules and Regulations. An increase in the pH limit would also recognize the naturally high pH characteristics of many of Wyoming's natural surface water bodies, which are known to run from 8.5 to over 9.0 standard units. Increasing the upper pH limit to 9.0 standard units would also make Phoenix's Wind River NPDES permits consistent with NPDES permits held by other oil and gas operators on the Wind River reservation.

In the event that the EPA has not completed renewal of the above permits, by the permit expiration date of September 30, 2010; Phoenix requests the current permits be granted an Administrative Extension, until the final permits are approved.

If you have any questions, please do not hesitate to contact me at (307) 587-6440.

Sincerely,

Thomas E. Faulkner, P.E.
Senior Petroleum Engineer

Enclosures: Rolff Lake Application Forms
Sheldon Dome Application Forms

Please print or type in the unshaded areas only.

Form Approved. OMB No. 2040-0086.

FORM 1 GENERAL

EPA

U.S. ENVIRONMENTAL PROTECTION AGENCY

GENERAL INFORMATION

Consolidated Permits Program

(Read the "General Instructions" before starting.)

I. EPA I.D. NUMBER

S		T/A	C
F	WY - 0024945		D
1	2 13	14	15

LABEL ITEMS

I. EPA I.D. NUMBER

III. FACILITY NAME

V. FACILITY MAILING ADDRESS

VI. FACILITY LOCATION

PLEASE PLACE LABEL IN THIS SPACE

GENERAL INSTRUCTIONS

If a preprinted label has been provided, affix it in the designated space. Review the information carefully; if any of it is incorrect, cross through it and enter the correct data in the appropriate fill-in area below. Also, if any of the preprinted data is absent *(the area to the left of the label space lists the information that should appear)*, please provide it in the proper fill-in area(s) below. If the label is complete and correct, you need not complete Items I, III, V, and VI *(except VI-B which must be completed regardless)*. Complete all items if no label has been provided. Refer to the instructions for detailed item descriptions and for the legal authorizations under which this data is collected.

II. POLLUTANT CHARACTERISTICS

INSTRUCTIONS: Complete A through J to determine whether you need to submit any permit application forms to the EPA. If you answer "yes" to any questions, you must submit this form and the supplemental form listed in the parenthesis following the question. Mark "X" in the box in the third column if the supplemental form is attached. If you answer "no" to each question, you need not submit any of these forms. You may answer "no" if your activity is excluded from permit requirements; see Section C of the instructions. See also, Section D of the instructions for definitions of **bold-faced terms**.

SPECIFIC QUESTIONS	Mark "X" YES	NO	FORM ATTACHED	SPECIFIC QUESTIONS	Mark "X" YES	NO	FORM ATTACHED
A. Is this facility a **publicly owned treatment works** which results in a **discharge** to **waters of the U.S.**? ~~(FORM 2A)~~		X		B. Does or will this facility *(either existing or proposed)* include a **concentrated animal feeding operation** or **aquatic animal production facility** which results in a **discharge** to **waters of the U.S.**? ~~(FORM 2B)~~		X	
	16	17	18		19	20	21
C. Is this a facility which currently results in **discharges** to **waters of the U.S.** other than those described in A or B above? (FORM 2C)	X			D. Is this a proposed facility *(other than those described in A or B above)* which will result in a **discharge** to **waters of the U.S.**? ~~(FORM 2D)~~		X	
	22	23	24		25	26	27
E. Does or will this facility treat, store, or dispose of **hazardous wastes**? ~~(FORM 3)~~		X		F. Do you or will you inject at this facility industrial or municipal effluent below the lowermost stratum containing, within one quarter mile of the well bore, underground sources of drinking water? ~~(FORM 4)~~		X	
	28	29	30		31	32	33
G. Do you or will you inject at this facility any produced water or other fluids which are brought to the surface in connection with conventional oil or natural gas production, inject fluids used for enhanced recovery of oil or natural gas, or inject fluids for storage of liquid hydrocarbons? ~~(FORM 4)~~ Attachment C	X			H. Do you or will you inject at this facility fluids for special processes such as mining of sulfur by the Frasch process, solution mining of minerals, in situ combustion of fossil fuel, or recovery of geothermal energy? ~~(FORM 4)~~		X	
	34	35	36		37	38	39
I. Is this facility a proposed **stationary source** which is one of the 28 industrial categories listed in the instructions and which will potentially emit 100 tons per year of any air pollutant regulated under the Clean Air Act and may affect or be located in an attainment area? ~~(FORM 5)~~		X		J. Is this facility a proposed **stationary source** which is NOT one of the 28 industrial categories listed in the instructions and which will potentially emit 250 tons per year of any air pollutant regulated under the Clean Air Act and may affect or be located in an **attainment area**? ~~(FORM 5)~~		X	
	40	41	42		43	44	45

III. NAME OF FACILITY

C 1 SKIP ROLFF LAKE UNIT

15 16 - 29 30 69

IV. FACILITY CONTACT

A. NAME & TITLE *(last, first, & title)*: C 2 FAULKNER THOMAS, SENIOR PETROLEUM ENGINEER (15 16 45)

B. PHONE *(area code & no.)*: (307) 587-6440 (46 48 49 51 52- 55)

V. FACILTY MAILING ADDRESS

A. STREET OR P.O. BOX: C 3 P.O. BOX 2653 (15 16 45)

B. CITY OR TOWN: C 4 CODY (15 16 40)

C. STATE: WY (41 42)

D. ZIP CODE: 82414 (47 51)

VI. FACILITY LOCATION

A. STREET, ROUTE NO. OR OTHER SPECIFIC IDENTIFIER: C 5 NE1/4 SEC 27 T6N R3W (15 16 45)

B. COUNTY NAME: FREMONT (46 70)

C. CITY OR TOWN: C 6 N/A (15 16 40)

D. STATE: WY (41 42)

E. ZIP CODE: (47 51)

F. COUNTY CODE *(if known)*: N/A (52 54)

CONTINUED FROM THE FRONT

VII. SIC CODES *(4-digit, in order of priority)*

A. FIRST	B. SECOND
C 7 1311 (specify) CRUDE PETROLEUM & NATURAL GAS	C 7 (specify) N/A
C. THIRD	**D. FOURTH**
C 7 (specify) N/A	C 7 (specify) N/A

VIII. OPERATOR INFORMATION

A. NAME: C 8 PHOENIX PRODUCTION COMPANY

B. Is the name listed in Item VIII-A also the owner? ☑ YES ☐ NO

C. STATUS OF OPERATOR *(Enter the appropriate letter into the answer box: if "Other," specify.)*

F = FEDERAL
S = STATE
P = PRIVATE
M = PUBLIC *(other than federal or state)*
O = OTHER *(specify)*

M (specify)

D. PHONE *(area code & no.)*: C A (307) 587-6440

E. STREET OR P.O. BOX: P.O. BOX 2436

F. CITY OR TOWN: C B CODY

G. STATE: WY

H. ZIP CODE: 82414

IX. INDIAN LAND

Is the facility located on Indian lands? ☑ YES ☐ NO

X. EXISTING ENVIRONMENTAL PERMITS

	C	T	I	
A. NPDES *(Discharges to Surface Water)*	9	N		WY0024945
D. PSD *(Air Emissions from Proposed Sources)*	9	P		N/A
B. UIC *(Underground Injection of Fluids)*	9	U		ATTACHMENT C
E. OTHER *(specify)*	9			N/A (specify)
C. RCRA *(Hazardous Wastes)*	9	R		N/A
E. OTHER *(specify)*	9			N/A (specify)

XI. MAP

Attach to this application a topographic map of the area extending to at least one mile beyond property boundaries. The map must show the outline of the facility, the location of each of its existing and proposed intake and discharge structures, each of its hazardous waste treatment, storage, or disposal facilities, and each well where it injects fluids underground. Include all springs, rivers, and other surface water bodies in the map area. See instructions for precise requirements. Attachment A

XII. NATURE OF BUSINESS *(provide a brief description)*

OIL AND GAS PRODUCTION.

XIII. CERTIFICATION *(see instructions)*

I certify under penalty of law that I have personally examined and am familiar with the information submitted in this application and all attachments and that, based on my inquiry of those persons immediately responsible for obtaining the information contained in the application, I believe that the information is true, accurate, and complete. I am aware that there are significant penalties for submitting false information, including the possibility of fine and imprisonment.

A. NAME & OFFICIAL TITLE *(type or print)*	B. SIGNATURE	C. DATE SIGNED
CHRIS WILLIAMSON, VICE PRESIDENT	Chris Williamson	3/19/10

COMMENTS FOR OFFICIAL USE ONLY

C

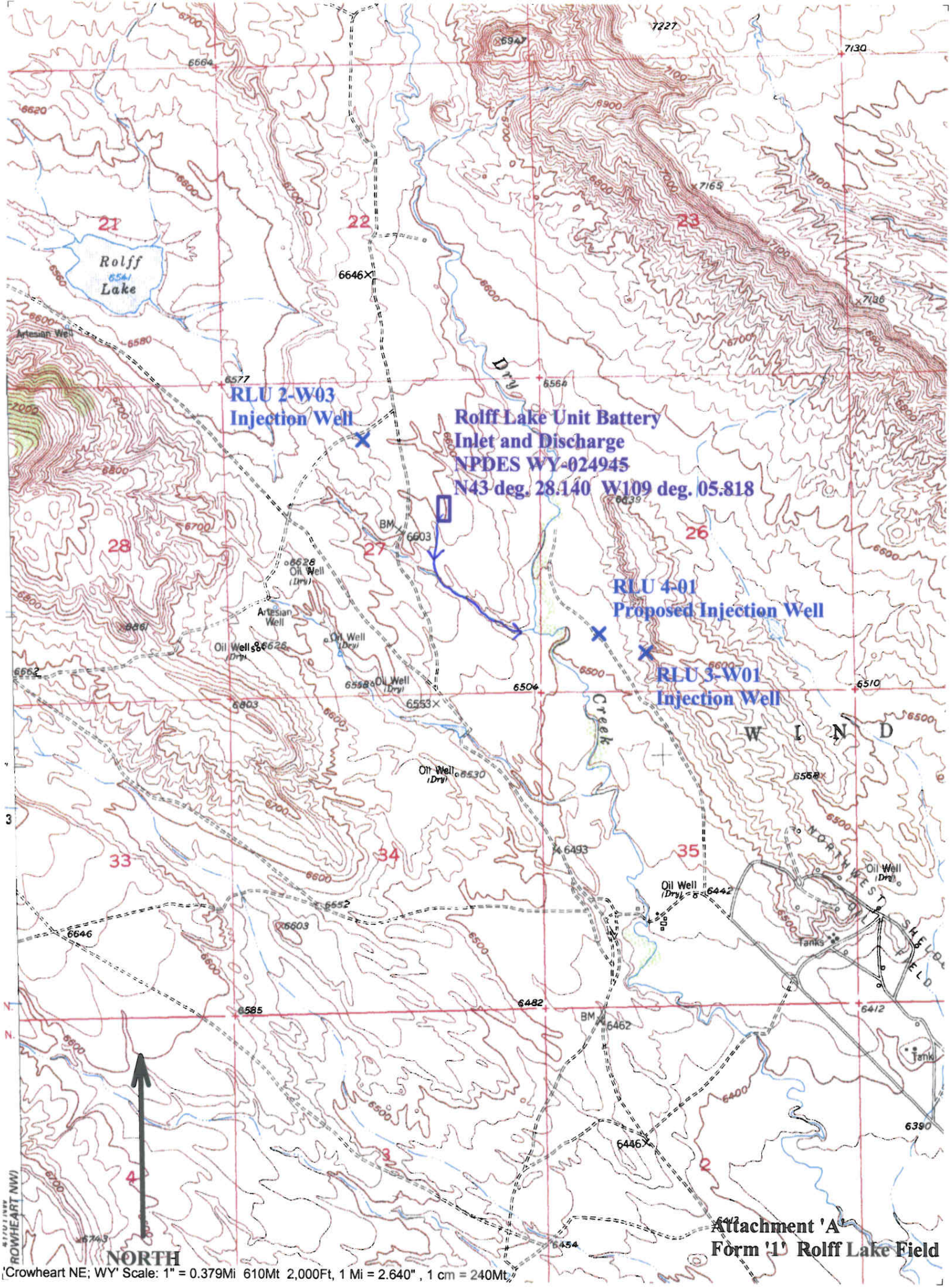

Attachment 'A'
Form '1' Rolff Lake Field

ROLFF LAKE FIELD – UNIT BATTERY
SW/4 – NE/4, Sec. 27, T6N, R3W
Fremont County, Wyoming

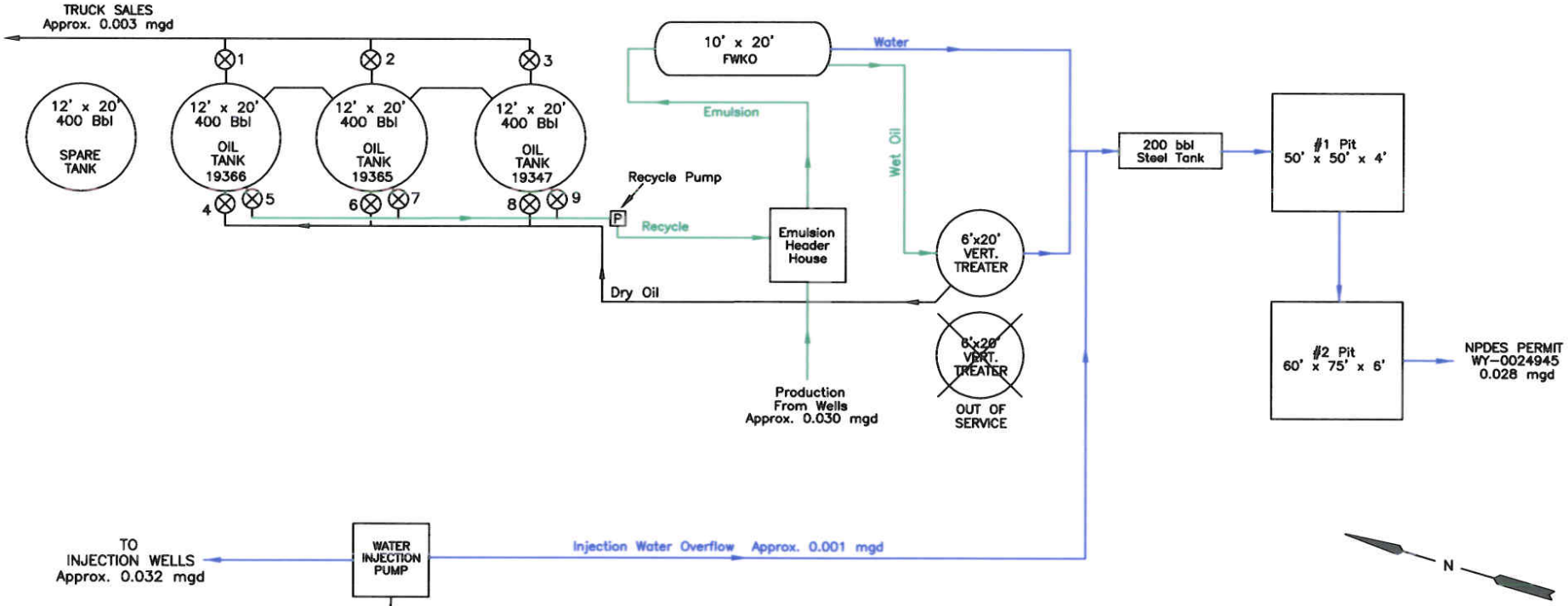

ROLFF LAKE FIELD INJECTION WELLS
ATTACHMENT C TO FORM 1

WELL NAME	EPA NUMBER	LOCATION	LEASE NUMBER	PERMIT TYPE
Rolff Lake #2-W03	WY2000-02127	NE/4 NW/4 Sec. 27, T6N, R3W	1-96-IND-7677	Rule Authorized UIC
Rolff Lake #3-W01	WY2000-02125	SE/4 SW/4 Sec. 26, T6N, R3W	1-96-IND-7679	Rule Authorized UIC
Rolff Lake #4-01	WY21148-07832	SW/4 SW/4 Sec. 26, T6N, R3W	Unit Seipt Fee Lease	Rule Authorized UIC

ATTACHMENT D – INCIDENTS OF POLLUTION PASS-THROUGH OVER THE PAST 3 YEARS

March 24, 2008 – pH value of 8.6 s.u. exceeds permit limit of 8.5 s.u.
Reason – Naturally high pH of discharge water.

May 13, 2008 – pH value of 9.0 s.u. exceeds permit limit of 8.5 s.u.
Reason – Naturally high pH of discharge water.

May 30, 2008 – pH value of 8.71 s.u. exceeds permit limit of 8.5 s.u.
Reason – Naturally high pH of discharge water.

June 9, 2008 – pH value of 8.70 s.u. exceeds permit limit of 8.5 s.u..
Reason – Naturally high pH of discharge water.

February 18, 2009 – oil and grease value of 11.7 mg/l exceeds permit limit of 10.0 mg/l.
Reason – Inadequate injection point of reverse emulsion breaking chemical.

March 3, 2009 – oil and grease value of 11.7 mg/l exceeds permit limit of 10.0 mg/l.
Reason – Inadequate injection point of reverse emulsion breaking chemical.

May 7, 2009 – pH value of 8.8 s.u. exceeds permit limit of 8.5 s.u.
Reason – Naturally high pH of discharge water.

June 12, 2009 – oil and grease value of 23.7 mg/l exceeds permit limit of 10.0 mg/l.
Reason – Believed to be positive interference from elemental sulfur, contained in sample residue.

June 19, 2009 – oil and grease value of 14.3 mg/l exceeds permit limit of 10.0 mg/l.
Reason – Believed to be positive interference from elemental sulfur, contained in sample residue.

July 14, 2009 – pH value of 8.66 s.u. exceeds permit limit of 8.5 s.u.
Reason – Naturally high pH of discharge water.

July 14, 2009 – TDS value of 5300 mg/l exceeds permit limit of 5000 mg/l.
Reason – Naturally high TDS of produced water.

August 5, 2009 – pH value of 8.77 s.u. exceeds permit limit of 8.5 s.u.
Reason – Naturally high pH of discharge water.

August 21, 2009 – pH value of 8.69 s.u. exceeds permit limit of 8.5 s.u.
Reason – Naturally high pH of discharge water.

Please answer questions 1-14 to the best of your ability if applicable. If the question does not apply, write "N/A" for non-applicable. Thank you!

NATIONAL POLLUTANT DISCHARGE ELIMINATION SYSTEM APPLICATION FOR PERMIT TO DISCHARGE WASTEWATER

SUPPLEMENTAL INFORMATION ROLFF FIELD

In addition to **Form 1** (and/or Form 2C), the permittee must provide supplemental information addressing the following items listed below. If the items listed are not applicable or information on such items is unavailable, please indicate such in you application.

1. Specify by outfall number (e.g., 001, 002, 003, etc.), and describe each discharge point from which the facility has either an existing or potential release of treated or untreated wastewater. Estimate average volume per day in million gallons per day (mgd). Include intermittent or non-continuous overflows, bypasses or seasonal discharges from lagoons, holding ponds, etc. Please use the map required by **Form 1** to locate points of discharge and the receiving waters.

   The Rolff facility has one outfall, 001. The total average volume per day discharged for the past year was 0.028 million gallons per day (mgd). It is estimated with the tentative work planned for the next 5 years, the approximate maximum average volume per day discharged could be 0.049 mgd.

2. List the name and actual, (or if unavailable, estimated), population for each municipality, quasi-municipality, or unincorporated area served.

   Not applicable. This is an oilfield produced water discharge.

3. Provide the following plant Design and Treatment Data:

   a. The average and peak design flow (mgd);

      The present system treats 0.028 mgd average. The estimated peak treatment and design flow of the current system is 0.084 mgd.

   b. The average and peak design organic treatment capacity;

      Not applicable.

   c. A description of the types of treatment units employed by the facility; and

The produced oil, water and gas are separated in pressure vessels and skim tanks by gravity, heat and emulsion breaking chemicals. The final water treatment uses a skim tank and 2 skim ponds to gravity-separate residual oils that are then skimmed with a vacuum truck and returned for sale.

d. A line drawing of the current wastewater treatment facility.

See Attachment B of Form 1.

4. Describe the sludge treatment train, including type of treatment and any sludge use or disposal practices used by the facility.

Pressure vessel and tank sludges generated at Rolff Lake are stored in the Fremont tanks and bermed sludge pile, located at the Sheldon Dome Field. Approximately every 10 years the sludge is sampled and a permit is filed with the Wind River Tribes for road application on lease roads. In the future, the sludge could also be sampled, mixed into a solid state, and sent to the nearest municipal or county landfill for proper disposal.

5. Provide the following sludge production information:

a. Tons of dry sludge produced each year.

Not applicable.

b. Average percent solids sludge produced and percent solids sludge sent for use and/or disposal.

It is estimated that approximately 40 barrels of wet sludge per year, containing 50% solids, may be generated at the Rolff Lake Field. The Rolff Lake sludges are included in the approximate 100 barrels of wet sludge per year discussed in the Sheldon Field Supplemental Information to Form 1, items 5 and 10.

c. Any sludge monitoring data over the last year (including ground water monitoring data, results of hazardous waste tests and results of actions taken to determine whether sludge is hazardous). Include a description of the methods used and sampling locations and dates.

Not applicable. No sludge, ground water, or hazardous waste testing was conducted during the past year. There is no ground water monitoring wells in the area. Production sludges are not listed as a hazardous waste, nor were any tested during the past year.

6. Indicate if there are any changes or improvements to the facility, either currently underway or anticipated over the next five (5) years, which will affect the quality of the discharge or generated sludges. Provide a narrative description of each improvement.

   There are no changes or improvements, either under way or anticipated over the next five years.

7. For each item identified in item 6, provide projected dates, as accurately as possible, for completion of each step listed below: *Not applicable.*

   a. Beginning Construction Date: *N/A.*

   b. Ending Construction Date: *N/A.*

   c. Beginning Discharge Date: *N/A.*

   d. Operational Level Attained: *N/A.*

8. Indicate the total estimated average daily waste flow, in mgd, from all non-domestic industrial sources.

   0.028 mgd.

9. List all instances, over the last three years, of pollutant "pass-through" of the treatment system into the environment without adequate treatment or of "interference" with the operation of the treatment facilities. Give a brief description of why each "pass-through" or "interference" incident occurred.

   See Attachment D of Form 1.

10. Indicate if the plant receives any trucked-in waste. If so, describe the kinds of waste received and if such waste is subject to any other state, local, or federal regulations.

    Not applicable.

11. List each significant Industrial User of the sewer system which meets any of the following criteria:

    Not applicable.

    a. Subject to National Categorical Pretreatment Standard;

b. Discharges 25,000 gallons per day or more of process wastewater;

c. Contributes process wastewater which makes up five(5) percent or more of the average dry weather hydraulic or organic capacity of the treatment plant; or

d. Has a reasonable potential to adversely affect the POTW treatment plant (inhibition, pass-through of pollutants, sludges contamination or endangerment of POTW workers).

12. Indicate if your facility has a pretreatment program approved under 40 CFR 403. If not, is one being developed?

Not applicable.

13. Indicate any discharge sample analyses which are routinely performed by a contract laboratory or consulting firm. For each pollutant for which such analysis is performed, list the name, address, and telephone number of each such laboratory or firm.

Total Dissolved Solids *Conductivity* *Chlorides* *Sulfates* *Oil and Grease* *Total Radium 226*	*Hauck Analytical* *613 Meadowlark Lane* *Riverton, WY* *Phone: (307) 856-8183*
Total Dissolved Solids *Conductivity* *Chlorides* *Sulfates* *Oil and Grease* *Total Radium 226*	*Energy Laboratories, Inc.* *2393 N. Salt Creek Hwy.* *Casper, WY 82601* *(307) 235-0515*
Total Dissolved Solids *Conductivity* *Chlorides* *Sulfates* *Oil and Grease* *Total Radium 226* *pH*	*Precision Analysis* *29 Country Acres Road* *Riverton, WY 82501-8933* *(307) 856-0866*

14. Indicate any operational or maintenance aspects of your facility for which a contractor is responsible. Supply the name, address, and telephone number of the contractor and describe the contractor's responsibilities.

No contractors are responsible for operational or maintenance aspects of this facility. Contractors do work in this oil field, performing various functions. However, all work conducted at this field is done under complete supervision and is the responsibility of Phoenix Production personnel.

Documentation of Beneficial Use for Phoenix Production's
Produced Water Discharges From Rolff Lake Field to an Unnamed Draw

a. Identification of the types of projected use(s) and water quality necessary to support each of those uses.

The produced water from this field is and has been historically used by wildlife and for stock watering. The consistent and historic beneficial use of this produced water by wildlife and stock establishes that the existing water quality is adequate to support the uses.

b. A demonstration that the produced water quality exceeds the water quality necessary to support those uses.

Dry Creek is designated for beneficial use for livestock and wildlife watering. Over the last 3 years the Rolff discharge water has averaged 4707 mg/l total dissolved solids, which is considered acceptable for livestock and wildlife use. As noted by the enclosed Beneficial Use Letters; the grazers in this area depend on this water for their livestock operations.

c. Quantity of water to be effectively utilized for such use(s), including assumptions and rationale.

This discharge of produced water is the only source of year-round water in the area (nearest year-round water appears to be Coal Draw 4.5 miles to NE). The discharge runs south and east from the battery in an unnamed draw about ¾ mile to Dry Creek. The produced water generally does not flow for more than ¾ mile before ending in the dry intermittent channel of Dry Creek. Therefore, most of the year, all of the discharged water is used for wildlife habitat and stock watering within 7/8 mile of the battery.

d. Landowner and Wind River Environmental Quality Commissions certifications of such use(s).

Tribal land user letters on this unnamed draw on the Wind River Reservation are provided as enclosures to a letter to Mr. Don Aragon requesting certification of these uses.

e. Water management plan (approved by WREQC) that encourages such use(s).

The Water Management Plan is attached and has been sent to Mr. Don Aragon for his approval.

f. Identification of any structures or ponds constructed to encourage such use(s).

There are no ponds or structures.

g. Flow paths and distances to perennial waters.

This unnamed draw runs 0.75 miles south and east to Dry Creek, an intermittent stream that flows 20 miles south to the Wind River, the first perennial water.

h. Anticipated water quality impacts on perennial and receiving streams.

Since this produced water does not reach the Wind River, it has no impact on the water quality of the Wind River.

PHOENIX PRODUCTION COMPANY

225 WEST YELLOWSTONE AVE. ■ P.O. BOX 2653 ■ CODY, WYOMING 82414 ■ 307-587-6440 ■ FAX 307-587-6450

March 15, 2010

Don Aragon
Wind River Environmental Quality Commission
P.O. Box 217
Fort Washakie, WY 82514

Re: Review of Livestock and Wildlife Beneficial Use of Phoenix Production Company's Discharge Water, for Renewal of NPDES Permits WY-0024945 (Rolff Lake Field) and WY-0024953 (Sheldon Dome Field)

Dear Mr. Aragon:

Enclosed are letters from ranchers who run livestock on range allotments east and west of Dry Creek. Also enclosed are Water Management Plans prepared for water discharged from the above referenced fields. Colleen Gillespie of the EPA has requested that we submit these Beneficial Use Letters for certification, and the Water Management Plans for approval by the Wind River Environmental Quality Commission.

Please call me at (307) 587-6440 if you have any questions on these Beneficial Use Letters or Water Management Plans. I have enclosed a draft letter for your possible use in forwarding the certified and approved documents to EPA. Your timely review is appreciated, as our permits are set to expire on September 30, 2010.

Sincerely,

Thomas E. Faulkner
Senior Petroleum Engineer

Enclosures: 2 Beneficial Use Letters
Rolff Lake Water Management Plan
Sheldon Dome Water Management Plan
Draft Letter to EPA

Feb. 4, 2010

Mr. Tom Faulkner
Phoenix Production Co.
P.O. Box 2653
Cody, Wyo. 82414

Dear Tom:

Marvin Blakesley called and was telling me that you are about to attempt to renew the water disposal at Sheldon Dome and Rolfe Lake. Both of these are vital to our cattle operation, because in late summer, fall, and winter to spring, until high water season, they are the only sources of water for our livestock. As you know, the past 5 or 6 years we have had a very short runoff season. All of the people on the range unit need these sources of water for our livestock. We hope your renewal is the the affirmative. Permitees on the range are Jolene Scheer 856-6193, Brian Ty Nicholls 857-6677, Brodie Nicholls 856-1457, Darwin Griebel 856-2950, and Alfred Deshaw 332-1548.

If we can help in any other way, please call.

Sincerely,

Jolene Scheer
Jolene Scheer

Ty Nicholls
Ty Nicholls

Brodie Nicholls
Brodie Nicholls

Darwin Griebel
Star Route - Box 2815
Kinnear, Wyoming 82516

January 20, 2010

RE: Renewal of Surface Water Discharge Permits for Sheldon Wame and Rolff Lake

To: EPA Region 8 and Wind River Environmental Quality Commission:

It has been brought to my attention that Phoenix Production Company is attempting to renew their water discharge permits on the Wind River Indian Reservation

I request that the EPA renew the permits to allow discharge of oil field water which I use to water my cattle. Both of these discharges are vital to my cattle operation. The water discharged from Sheldon Wame and Rolff Lake Fields is also important to the wildlife on the Reservation and other tribal members who run cattle.

It would be very detrimental to my livestock operation if this water is <u>not</u> available. So, I request that this water to be allowed to be discharged.

Sincerely,
Darwin J. Griebel

WATER MANAGEMENT PLAN FOR ROLFF LAKE FIELD DISCHARGE TO AN UNNAMED DRAW

Phoenix Production realizes that its discharge of produced water to an unnamed draw is being beneficially used by livestock and wildlife along the ¾ mile length of the unnamed draw, south and east of the Rolff Lake Battery, on the Wind River Reservation. To encourage continuation of these uses, Phoenix Production's first priority is to maintain the water quality of its discharged water in compliance with the effluent limits in its NPDES permit. To accomplish this priority, Phoenix will strive to continuously maintain and operate the battery treatment facilities so that the discharge complies with the 10 mg/l oil and grease limit and provides good water quality for the beneficial uses associated with the discharge.

Another important aspect of maintaining the discharge water quality for wildlife and livestock is the prevention and clean up of oil spills. The Rolff Lake Field has a Spill Prevention and Countermeasures Plan (SPCC Plan) as required by EPA. The plan is implemented to insure that good spill prevention measures are in place and maintained. Secondly, the plan identifies equipment and personal resources, and provides a company commitment to stop and clean up oil spills to minimize the environmental impact.

Phoenix also realizes that continuous discharge is important to encouraging existing use of the discharge water in dry and drought prone areas such as the reservation. For the next five years our projections are for a continuous discharge of water near the present quantities, with a possible increase of 250 – 300 barrels of water per day (BWPD).

March , 2010

Permit Contact (8P-WW)
U. S. EPA – Region 8
1595 Wynkoop
Denver, CO 80202

Re: Wind River Environmental Quality Commission Certification of Beneficial Use Letters and Approval of Water Management Plans, for Renewal of Phoenix's NPDES Permits WY-0024945 (Rolff Lake Field) and WY-0024953 (Sheldon Dome Field)

To Whom It May Concern:

The Wind River Environmental Quality Commission has reviewed the enclosed Beneficial Use Letters and finds them acceptable. We have also reviewed and approve the enclosed Water Management Plans.

Sincerely,

Don Aragon
Wind River Environmental Quality Commission

Enclosures: 2 Beneficial Use Letters
Sheldon Dome Water Management Plan
Rolff Lake Water Management plan

cc: Tom Faulkner – Phoenix Production Company

Please print or type in the unshaded areas only.

EPA I.D. NUMBER (*copy from Item 1 of Form 1*)
WY-0024945

Form Approved.
OMB No. 2040-0086.
Approval expires 3-31-98.

FORM **2C** NPDES

U.S. ENVIRONMENTAL PROTECTION AGENCY
APPLICATION FOR PERMIT TO DISCHARGE WASTEWATER
EXISTING MANUFACTURING, COMMERCIAL, MINING AND SILVICULTURE OPERATIONS
Consolidated Permits Program

I. OUTFALL LOCATION

For each outfall, list the latitude and longitude of its location to the nearest 15 seconds and the name of the receiving water.

A. OUTFALL NUMBER (*list*)	B. LATITUDE			C. LONGITUDE			D. RECEIVING WATER (*name*)
	1. DEG.	2. MIN.	3. SEC.	1. DEG.	2. MIN.	3. SEC.	
001	43	28	15	109	5	55	UNNAMED DRAW TO INTERMITTENT
							STREAM DRY CREEK

II. FLOWS, SOURCES OF POLLUTION, AND TREATMENT TECHNOLOGIES

A. Attach a line drawing showing the water flow through the facility. Indicate sources of intake water, operations contributing wastewater to the effluent, and treatment units labeled to correspond to the more detailed descriptions in Item B. Construct a water balance on the line drawing by showing average flows between intakes, operations, treatment units, and outfalls. If a water balance cannot be determined (*e.g., for certain mining activities*), provide a pictorial description of the nature and amount of any sources of water and any collection or treatment measures. See Attachment B of Form 1

B. For each outfall, provide a description of: (1) All operations contributing wastewater to the effluent, including process wastewater, sanitary wastewater, cooling water, and storm water runoff; (2) The average flow contributed by each operation; and (3) The treatment received by the wastewater. Continue on additional sheets if necessary.

1. OUT-FALL NO. (*list*)	2. OPERATION(S) CONTRIBUTING FLOW		3. TREATMENT		
	a. OPERATION (*list*)	b. AVERAGE FLOW (*include units*)	a. DESCRIPTION	b. LIST CODES FROM TABLE 2C-1	
001	BATTERY OIL/WATER SEPARATION	0.028 mgd	FLOTATION	1H	

OFFICIAL USE ONLY (*effluent guidelines sub-categories*)

CONTINUED FROM THE FRONT

C. Except for storm runoff, leaks, or spills, are any of the discharges described in Items II-A or B intermittent or seasonal?

☐ YES (*complete the following table*) ☑ NO (*go to Section III*)

1. OUTFALL NUMBER (*list*)	2. OPERATION(s) CONTRIBUTING FLOW (*list*)	3. FREQUENCY		4. FLOW				
		a. DAYS PER WEEK (*specify average*)	b. MONTHS PER YEAR (*specify average*)	a. FLOW RATE (*in mgd*)		B. TOTAL VOLUME (*specify with units*)		C. DURATION (*in days*)
				1. LONG TERM AVERAGE	2. MAXIMUM DAILY	1. LONG TERM AVERAGE	2. MAXIMUM DAILY	

III. PRODUCTION

A. Does an effluent guideline limitation promulgated by EPA under Section 304 of the Clean Water Act apply to your facility?

☑ YES (*complete Item III-B*) ☐ NO (*go to Section IV*)

B. Are the limitations in the applicable effluent guideline expressed in terms of production (*or other measure of operation*)?

☐ YES (*complete Item III-C*) ☑ NO (*go to Section IV*)

C. If you answered "yes" to Item III-B, list the quantity which represents an actual measurement of your level of production, expressed in the terms and units used in the applicable effluent guideline, and indicate the affected outfalls.

1. AVERAGE DAILY PRODUCTION			2. AFFECTED OUTFALLS (*list outfall numbers*)
a. QUANTITY PER DAY	b. UNITS OF MEASURE	c. OPERATION, PRODUCT, MATERIAL, ETC. (*specify*)	

IV. IMPROVEMENTS

A. Are you now required by any Federal, State or local authority to meet any implementation schedule for the construction, upgrading or operations of wastewater treatment equipment or practices or any other environmental programs which may affect the discharges described in this application? This includes, but is not limited to, permit conditions, administrative or enforcement orders, enforcement compliance schedule letters, stipulations, court orders, and grant or loan conditions.

☐ YES (*complete the following table*) ☑ NO (*go to Item IV-B*)

1. IDENTIFICATION OF CONDITION, AGREEMENT, ETC.	2. AFFECTED OUTFALLS		3. BRIEF DESCRIPTION OF PROJECT	4. FINAL COMPLIANCE DATE	
	a. NO.	b. SOURCE OF DISCHARGE		a. REQUIRED	b. PROJECTED

B. OPTIONAL: You may attach additional sheets describing any additional water pollution control programs (*or other environmental projects which may affect your discharges*) you now have underway or which you plan. Indicate whether each program is now underway or planned, and indicate your actual or planned schedules for construction.

☐ MARK "X" IF DESCRIPTION OF ADDITIONAL CONTROL PROGRAMS IS ATTACHED

 CONTINUE ON PAGE 3

CONTINUED FROM PAGE 2

EPA I.D. NUMBER (*copy from Item 1 of Form 1*)
WY-0024945

V. INTAKE AND EFFLUENT CHARACTERISTICS

A, B, & C: See instructions before proceeding – Complete one set of tables for each outfall – Annotate the outfall number in the space provided.
NOTE: Tables V-A, V-B, and V-C are included on separate sheets numbered V-1 through V-9.

D. Use the space below to list any of the pollutants listed in Table 2c-3 of the instructions, which you know or have reason to believe is discharged or may be discharged from any outfall. For every pollutant you list, briefly describe the reasons you believe it to be present and report any analytical data in your possession.

1. POLLUTANT	2. SOURCE	1. POLLUTANT	2. SOURCE
XYLENE	OUT FALL 001, XYLENE IS NATURALLY IN CRUDE OIL AND SINCE IT IS SOMEWHAT WATER SOLUBLE, THERE IS SOME IN THE DISCHARGE ANALYZED AT: 310 ug/l		

VI. POTENTIAL DISCHARGES NOT COVERED BY ANALYSIS

Is any pollutant listed in Item V-C a substance or a component of a substance which you currently use or manufacture as an intermediate or final product or byproduct?

☐ YES (*list all such pollutants below*) ☑ NO (*go to Item VI-B*)

CONTINUED FROM THE FRONT

VII. BIOLOGICAL TOXICITY TESTING DATA

Do you have any knowledge or reason to believe that any biological test for acute or chronic toxicity has been made on any of your discharges or on a receiving water in relation to your discharge within the last 3 years?

☐ YES (*identify the test(s) and describe their purposes below*) ☑ NO (*go to Section VIII*)

VIII. CONTRACT ANALYSIS INFORMATION

Were any of the analyses reported in Item V performed by a contract laboratory or consulting firm?

☑ YES (*list the name, address, and telephone number of, and pollutants analyzed by, each such laboratory or firm below*) ☐ NO (*go to Section IX*)

A. NAME	B. ADDRESS	C. TELEPHONE (*area code & no.*)	D. POLLUTANTS ANALYZED (*list*)
ENERGY LABORATORIES INC.	2393 N. SALT CREEK HWY CASPER, WY 82607	(307) 235-0515	ALL POLLUTANTS REPORTED IN PART V. EXCEPT THOSE LISTED BELOW FOR HAUCK ANALYTICAL, PRECISION ANALYSIS, AND GENE R. GEORGE AND ASSOCIATES, INC.
HAUCK ANALYTICAL	613 MEADOWLARK LANE RIVERTON, WY 82501	(307) 856-8183	pH SULFATES OIL & GREASE RADIUM
PRECISION ANALYSIS	29 COUNTRY ACRES ROAD RIVERTON, WY 82501-8933	(307)856-0866	pH SULFATES OIL & GREASE RADIUM
GENE R. GEORGE AND ASSOCIATES	1501 STAMPEDE AVE. MAIL UNIT 9002 CODY, WY 82414	(307) 587-5921	TEMPERATURE

IX. CERTIFICATION

I certify under penalty of law that this document and all attachments were prepared under my direction or supervision in accordance with a system designed to assure that qualified personnel properly gather and evaluate the information submitted. Based on my inquiry of the person or persons who manage the system or those persons directly responsible for gathering the information, the information submitted is, to the best of my knowledge and belief, true, accurate, and complete. I am aware that there are significant penalties for submitting false information, including the possibility of fine and imprisonment for knowing violations.

A. NAME & OFFICIAL TITLE (*type or print*)	B. PHONE NO. (*area code & no.*)
CHRIS WILLIAMSON, VICE PRESIDENT	(213) 225-5900
C. SIGNATURE Chris Williamson	D. DATE SIGNED 3/19/2010

PLEASE PRINT OR TYPE IN THE UNSHADED AREAS ONLY. You may report some or all of this information on separate sheets (*use the same format*) instead of completing these pages.
SEE INSTRUCTIONS.

EPA I.D. NUMBER (*copy from Item 1 of Form 1*)
WY-0024945

V. INTAKE AND EFFLUENT CHARACTERISTICS *(continued from page 3 of Form 2-C)*

OUTFALL NO.
001

PART A –You must provide the results of at least one analysis for every pollutant in this table. Complete one table for each outfall. See instructions for additional details.

1. POLLUTANT	2. EFFLUENT a. MAXIMUM DAILY VALUE (1) CONCENTRATION	(2) MASS	b. MAXIMUM 30 DAY VALUE (*if available*) (1) CONCENTRATION	(2) MASS	c. LONG TERM AVRG. VALUE (*if available*) (1) CONCENTRATION	(2) MASS	d. NO. OF ANALYSES	3. UNITS (*specify if blank*) a. CONCEN-TRATION	b. MASS	4. INTAKE (*optional*) a. LONG TERM AVERAGE VALUE (1) CONCENTRATION	(2) MASS	b. NO. OF ANALYSES
a. Biochemical Oxygen Demand (*BOD*)	509						1	mg/l				
b. Chemical Oxygen Demand (*COD*)	567						1	mg/l				
c. Total Organic Carbon (*TOC*)	91.7						1	mg/l				
d. Total Suspended Solids (*TSS*)	16						1	mg/l				
e. Ammonia (*as N*)	0.12						1	mg/l				
f. Flow	VALUE 0.037		VALUE 0.029		VALUE 0.028		2	mgd		VALUE		
g. Temperature (*winter*)	VALUE 2		VALUE		VALUE		1	°C		VALUE		
h. Temperature (*summer*)	VALUE N/A		VALUE		VALUE			°C		VALUE		
i. pH	MINIMUM 6.9	MAXIMUM 8.8	MINIMUM	MAXIMUM			14	STANDARD UNITS				

PART B – Mark "X" in column 2-a for each pollutant you know or have reason to believe is present. Mark "X" in column 2-b for each pollutant you believe to be absent. If you mark column 2a for any pollutant which is limited either directly, or indirectly but expressly, in an effluent limitations guideline, you must provide the results of at least one analysis for that pollutant. For other pollutants for which you mark column 2a, you must provide quantitative data or an explanation of their presence in your discharge. Complete one table for each outfall. See the instructions for additional details and requirements.

1. POLLUTANT AND CAS NO. (*if available*)	2. MARK "X" a. BELIEVED PRESENT	b. BELIEVED ABSENT	3. EFFLUENT a. MAXIMUM DAILY VALUE (1) CONCENTRATION	(2) MASS	b. MAXIMUM 30 DAY VALUE (*if available*) (1) CONCENTRATION	(2) MASS	c. LONG TERM AVRG. VALUE (*if available*) (1) CONCENTRATION	(2) MASS	d. NO. OF ANALYSES	4. UNITS a. CONCEN-TRATION	b. MASS	5. INTAKE (*optional*) a. LONG TERM AVERAGE VALUE (1) CONCENTRATION	(2) MASS	b. NO. OF ANALYSES
a. Bromide (24959-67-9)		X												
b. Chlorine, Total Residual		X												
c. Color		X												
d. Fecal Coliform		X												
e. Fluoride (16984-48-8)	X		5.0						1	mg/l				
f. Nitrate-Nitrite (*as N*)		X												

CONTINUE ON REVERSE

ITEM V-B CONTINUED FROM FRONT

1. POLLUTANT AND CAS NO. (*if available*)	2. MARK "X"		3. EFFLUENT							4. UNITS		5. INTAKE (*optional*)		
	a. BELIEVED PRESENT	b. BELIEVED ABSENT	a. MAXIMUM DAILY VALUE		b. MAXIMUM 30 DAY VALUE (*if available*)		c. LONG TERM AVRG. VALUE (*if available*)		d. NO. OF ANALYSES	a. CONCEN-TRATION	b. MASS	a. LONG TERM AVERAGE VALUE		b. NO. OF ANALYSES
			(1) CONCENTRATION	(2) MASS	(1) CONCENTRATION	(2) MASS	(1) CONCENTRATION	(2) MASS				(1) CONCENTRATION	(2) MASS	
g. Nitrogen, Total Organic (*as N*)	X		ND						1	mg/l				
h. Oil and Grease	X		23.7				6.68		18	mg/l				
i. Phosphorus (as P), Total (7723-14-0)		X												
j. Radioactivity														
(1) Alpha, Total	X		ND						1	pCi/l				
(2) Beta, Total	X		ND						1	pCi/l				
(3) Radium, Total	X		0.7						1	pCi/l				
(4) Radium 226, Total	X		1.6				0.74		5	pCi/l				
k. Sulfate (*as SO_4*) (14808-79-8)	X		1330				1037		5	mg/l				
l. Sulfide (*as S*)	X		170						1	mg/l				
m. Sulfite (*as SO_3*) (14265-45-3)	X		15						1	mg/l				
n. Surfactants		X												
o. Aluminum, Total (7429-90-5)		X												
p. Barium, Total (7440-39-3)		X												
q. Boron, Total (7440-42-8)	X		3.6						1	mg/l				
r. Cobalt, Total (7440-48-4)		X												
s. Iron, Total (7439-89-6)	X		ND						1	mg/l				
t. Magnesium, Total (7439-95-4)	X		27						1	mg/l				
u. Molybdenum, Total (7439-98-7)		X												
v. Manganese, Total (7439-96-5)	X		0.02						1	mg/l				
w. Tin, Total (7440-31-5)		X												
x. Titanium, Total (7440-32-6)	X		ND						1	mg/l				

CONTINUE ON PAGE V-3

EPA I.D. NUMBER (*copy from Item 1 of Form 1*)	OUTFALL NUMBER
WY-0024945	001

CONTINUED FROM PAGE 3 OF FORM 2-C

PART C - If you are a primary industry and this outfall contains process wastewater, refer to Table 2c-2 in the instructions to determine which of the GC/MS fractions you must test for. Mark "X" in column 2-a for all such GC/MS fractions that apply to your industry and for ALL toxic metals, cyanides, and total phenols. If you are not required to mark column 2-a (*secondary industries, nonprocess wastewater outfalls, and nonrequired GC/MS fractions*), mark "X" in column 2-b for each pollutant you know or have reason to believe is present. Mark "X" in column 2-c for each pollutant you believe is absent. If you mark column 2a for any pollutant, you must provide the results of at least one analysis for that pollutant. If you mark column 2b for any pollutant, you must provide the results of at least one analysis for that pollutant if you know or have reason to believe it will be discharged in concentrations of 10 ppb or greater. If you mark column 2b for acrolein, acrylonitrile, 2,4 dinitrophenol, or 2-methyl-4, 6 dinitrophenol, you must provide the results of at least one analysis for each of these pollutants which you know or have reason to believe that you discharge in concentrations of 100 ppb or greater. Otherwise, for pollutants for which you mark column 2b, you must either submit at least one analysis or briefly describe the reasons the pollutant is expected to be discharged. Note that there are 7 pages to this part; please review each carefully. Complete one table (*all 7 pages*) for each outfall. See instructions for additional details and requirements.

1. POLLUTANT AND CAS NUMBER (*if available*)	2. MARK "X"			3. EFFLUENT							4. UNITS		5. INTAKE (*optional*)		
	a. TESTING REQUIRED	b. BELIEVED PRESENT	c. BELIEVED ABSENT	a. MAXIMUM DAILY VALUE		b. MAXIMUM 30 DAY VALUE (*if available*)		c. LONG TERM AVRG. VALUE (*if available*)		d. NO. OF ANALYSES	a. CONCEN-TRATION	b. MASS	a. LONG TERM AVERAGE VALUE		b. NO. OF ANALYSES
				(1) CONCENTRATION	(2) MASS	(1) CONCENTRATION	(2) MASS	(1) CONCENTRATION	(2) MASS				(1) CONCENTRATION	(2) MASS	
METALS, CYANIDE, AND TOTAL PHENOLS															
1M. Antimony, Total (7440-36-0)			X												
2M. Arsenic, Total (7440-38-2)		X		0.004						1	mg/l				
3M. Beryllium, Total (7440-41-7)			X												
4M. Cadmium, Total (7440-43-9)			X												
5M. Chromium, Total (7440-47-3)			X												
6M. Copper, Total (7440-50-8)			X												
7M. Lead, Total (7439-92-1)			X												
8M. Mercury, Total (7439-97-6)		X		ND						1	ug/l				
9M. Nickel, Total (7440-02-0)			X												
10M. Selenium, Total (7782-49-2)		X		ND						1	mg/l				
11M. Silver, Total (7440-22-4)			X												
12M. Thallium, Total (7440-28-0)			X												
13M. Zinc, Total (7440-66-6)		X		0.44						1	mg/l				
14M. Cyanide, Total (57-12-5)			X												
15M. Phenols, Total			X												
DIOXIN															
2,3,7,8-Tetra-chlorodibenzo-P-Dioxin (1764-01-6)			X	DESCRIBE RESULTS											

CONTINUE ON REVERSE

CONTINUED FROM THE FRONT

1. POLLUTANT AND CAS NUMBER (*if available*)	2. MARK "X"			3. EFFLUENT							4. UNITS		5. INTAKE (*optional*)		
	a. TESTING REQUIRED	b. BELIEVED PRESENT	c. BELIEVED ABSENT	a. MAXIMUM DAILY VALUE		b. MAXIMUM 30 DAY VALUE (*if available*)		c. LONG TERM AVRG. VALUE (*if available*)		d. NO. OF ANALYSES	a. CONCEN-TRATION	b. MASS	a. LONG TERM AVERAGE VALUE		b. NO. OF ANALYSES
				(1) CONCENTRATION	(2) MASS	(1) CONCENTRATION	(2) MASS	(1) CONCENTRATION	(2) MASS				(1) CONCENTRATION	(2) MASS	
GC/MS FRACTION – VOLATILE COMPOUNDS															
1V. Accrolein (107-02-8)			X												
2V. Acrylonitrile (107-13-1)			X												
3V. Benzene (71-43-2)		X		740						1	ug/l				
4V. Bis (*Chloro-methyl*) Ether (542-88-1)			X												
5V. Bromoform (75-25-2)			X												
6V. Carbon Tetrachloride (56-23-5)			X												
7V. Chlorobenzene (108-90-7)			X												
8V. Chlorodi-bromomethane (124-48-1)			X												
9V. Chloroethane (75-00-3)			X												
10V. 2-Chloro-ethylvinyl Ether (110-75-8)			X												
11V. Chloroform (67-66-3)			X												
12V. Dichloro-bromomethane (75-27-4)			X												
13V. Dichloro-difluoromethane (75-71-8)			X												
14V. 1,1-Dichloro-ethane (75-34-3)			X												
15V. 1,2-Dichloro-ethane (107-06-2)			X												
16V. 1,1-Dichloro-ethylene (75-35-4)			X												
17V. 1,2-Dichloro-propane (78-87-5)			X												
18V. 1,3-Dichloro-propylene (542-75-6)			X												
19V. Ethylbenzene (100-41-4)		X		82						1	ug/l				
20V. Methyl Bromide (74-83-9)			X												
21V. Methyl Chloride (74-87-3)			X												

CONTINUE ON PAGE V-5

CONTINUED FROM PAGE V-4

1. POLLUTANT AND CAS NUMBER (*if available*)	2. MARK "X"			3. EFFLUENT							4. UNITS		5. INTAKE (*optional*)		
	a. TESTING REQUIRED	b. BELIEVED PRESENT	c. BELIEVED ABSENT	a. MAXIMUM DAILY VALUE		b. MAXIMUM 30 DAY VALUE (*if available*)		c. LONG TERM AVRG. VALUE (*if available*)		d. NO. OF ANALYSES	a. CONCEN-TRATION	b. MASS	a. LONG TERM AVERAGE VALUE		b. NO. OF ANALYSES
				(1) CONCENTRATION	(2) MASS	(1) CONCENTRATION	(2) MASS	(1) CONCENTRATION	(2) MASS				(1) CONCENTRATION	(2) MASS	
GC/MS FRACTION – VOLATILE COMPOUNDS (*continued*)															
22V. Methylene Chloride (75-09-2)			X												
23V. 1,1,2,2-Tetrachloroethane (79-34-5)			X												
24V. Tetrachloro-ethylene (127-18-4)			X												
25V. Toluene (108-88-3)		X		480						1	ug/l				
26V. 1,2-Trans-Dichloroethylene (156-60-5)			X												
27V. 1,1,1-Trichloro-ethane (71-55-6)			X												
28V. 1,1,2-Trichloro-ethane (79-00-5)			X												
29V Trichloro-ethylene (79-01-6)			X												
30V. Trichloro-fluoromethane (75-69-4)			X												
31V. Vinyl Chloride (75-01-4)			X												
GC/MS FRACTION – ACID COMPOUNDS															
1A. 2-Chlorophenol (95-57-8)			X												
2A. 2,4-Dichloro-phenol (120-83-2)			X												
3A. 2,4-Dimethyl-phenol (105-67-9)			X												
4A. 4,6-Dinitro-O-Cresol (534-52-1)			X												
5A. 2,4-Dinitro-phenol (51-28-5)			X												
6A. 2-Nitrophenol (88-75-5)			X												
7A. 4-Nitrophenol (100-02-7)			X												
8A. P-Chloro-M-Cresol (59-50-7)			X												
9A. Pentachloro-phenol (87-86-5)			X												
10A. Phenol (108-95-2)			X												
11A. 2,4,6-Trichloro-phenol (88-05-2)			X												

CONTINUE ON REVERSE

CONTINUED FROM THE FRONT

1. POLLUTANT AND CAS NUMBER (*if available*)	2. MARK "X"			3. EFFLUENT							4. UNITS		5. INTAKE (*optional*)		
	a. TESTING REQUIRED	b. BELIEVED PRESENT	c. BELIEVED ABSENT	a. MAXIMUM DAILY VALUE		b. MAXIMUM 30 DAY VALUE (*if available*)		c. LONG TERM AVRG. VALUE (*if available*)		d. NO. OF ANALYSES	a. CONCEN-TRATION	b. MASS	a. LONG TERM AVERAGE VALUE		b. NO. OF ANALYSES
				(1) CONCENTRATION	(2) MASS	(1) CONCENTRATION	(2) MASS	(1) CONCENTRATION	(2) MASS				(1) CONCENTRATION	(2) MASS	
GC/MS FRACTION – BASE/NEUTRAL COMPOUNDS															
1B. Acenaphthene (83-32-9)			X												
2B. Acenaphtylene (208-96-8)			X												
3B. Anthracene (120-12-7)			X												
4B. Benzidine (92-87-5)			X												
5B. Benzo (*a*) Anthracene (56-55-3)			X												
6B. Benzo (*a*) Pyrene (50-32-8)			X												
7B. 3,4-Benzo-fluoranthene (205-99-2)			X												
8B. Benzo (*ghi*) Perylene (191-24-2)			X												
9B. Benzo (*k*) Fluoranthene (207-08-9)			X												
10B. Bis (*2-Chloro-ethoxy*) Methane (111-91-1)			X												
11B. Bis (*2-Chloro-ethyl*) Ether (111-44-4)			X												
12B. Bis (*2-Chloroisopropyl*) Ether (102-80-1)			X												
13B. Bis (*2-Ethyl-hexyl*) Phthalate (117-81-7)			X												
14B. 4-Bromophenyl Phenyl Ether (101-55-3)			X												
15B. Butyl Benzyl Phthalate (85-68-7)			X												
16B. 2-Chloro-naphthalene (91-58-7)			X												
17B. 4-Chloro-phenyl Phenyl Ether (7005-72-3)			X												
18B. Chrysene (218-01-9)			X												
19B. Dibenzo (*a,h*) Anthracene (53-70-3)			X												
20B. 1,2-Dichloro-benzene (95-50-1)			X												
21B. 1,3-Di-chloro-benzene (541-73-1)			X												

CONTINUE ON PAGE V-7

CONTINUED FROM PAGE V-6

1. POLLUTANT AND CAS NUMBER (*if available*)	2. MARK "X"			3. EFFLUENT							4. UNITS		5. INTAKE (*optional*)		
	a. TESTING REQUIRED	b. BELIEVED PRESENT	c. BELIEVED ABSENT	a. MAXIMUM DAILY VALUE		b. MAXIMUM 30 DAY VALUE (*if available*)		c. LONG TERM AVRG. VALUE (*if available*)		d. NO. OF ANALYSES	a. CONCEN-TRATION	b. MASS	a. LONG TERM AVERAGE VALUE		b. NO. OF ANALYSES
				(1) CONCENTRATION	(2) MASS	(1) CONCENTRATION	(2) MASS	(1) CONCENTRATION	(2) MASS				(1) CONCENTRATION	(2) MASS	
GC/MS FRACTION – BASE/NEUTRAL COMPOUNDS (*continued*)															
22B. 1,4-Dichloro-benzene (106-46-7)			X												
23B. 3,3-Dichloro-benzidine (91-94-1)			X												
24B. Diethyl Phthalate (84-66-2)			X												
25B. Dimethyl Phthalate (131 -11-3)			X												
26B. Di-N-Butyl Phthalate (84-74-2)			X												
27B. 2,4-Dinitro-toluene (121-14-2)			X												
28B. 2,6-Dinitro-toluene (606-20-2)			X												
29B. Di-N-Octyl Phthalate (117-84-0)			X												
30B. 1,2-Diphenyl-hydrazine (*as Azo-benzene*) (122-66-7)			X												
31B. Fluoranthene (206-44-0)			X												
32B. Fluorene (86-73-7)			X												
33B. Hexachloro-benzene (118-74-1)			X												
34B. Hexachloro-butadiene (87-68-3)			X												
35B. Hexachloro-cyclopentadiene (77-47-4)			X												
36B Hexachloro-ethane (67-72-1)			X												
37B. Indeno (*1,2,3-cd*) Pyrene (193-39-5)			X												
38B. Isophorone (78-59-1)			X												
39B. Naphthalene (91-20-3)		X		27						1	ug/l				
40B. Nitrobenzene (98-95-3)			X												
41B. N-Nitro-sodimethylamine (62-75-9)			X												
42B. N-Nitrosodi-N-Propylamine (621-64-7)			X												

CONTINUE ON REVERSE

CONTINUED FROM THE FRONT

1. POLLUTANT AND CAS NUMBER (*if available*)	2. MARK "X"			3. EFFLUENT							4. UNITS		5. INTAKE (*optional*)		
	a. TESTING REQUIRED	b. BELIEVED PRESENT	c. BELIEVED ABSENT	a. MAXIMUM DAILY VALUE		b. MAXIMUM 30 DAY VALUE (*if available*)		c. LONG TERM AVRG. VALUE (*if available*)		d. NO. OF ANALYSES	a. CONCEN-TRATION	b. MASS	a. LONG TERM AVERAGE VALUE		b. NO. OF ANALYSES
				(1) CONCENTRATION	(2) MASS	(1) CONCENTRATION	(2) MASS	(1) CONCENTRATION	(2) MASS				(1) CONCENTRATION	(2) MASS	
GC/MS FRACTION – BASE/NEUTRAL COMPOUNDS (*continued*)															
43B. N-Nitro-sodiphenylamine (86-30-6)			X												
44B. Phenanthrene (85-01-8)			X												
45B. Pyrene (129-00-0)			X												
46B. 1,2,4-Tri-chlorobenzene (120-82-1)			X												
GC/MS FRACTION – PESTICIDES															
1P. Aldrin (309-00-2)			X												
2P. α-BHC (319-84-6)			X												
3P. β-BHC (319-85-7)			X												
4P. γ-BHC (58-89-9)			X												
5P. δ-BHC (319-86-8)			X												
6P. Chlordane (57-74-9)			X												
7P. 4,4'-DDT (50-29-3)			X												
8P. 4,4'-DDE (72-55-9)			X												
9P. 4,4'-DDD (72-54-8)			X												
10P. Dieldrin (60-57-1)			X												
11P. α-Enosulfan (115-29-7)			X												
12P. β-Endosulfan (115-29-7)			X												
13P. Endosulfan Sulfate (1031-07-8)			X												
14P. Endrin (72-20-8)			X												
15P. Endrin Aldehyde (7421-93-4)			X												
16P. Heptachlor (76-44-8)			X												

CONTINUE ON PAGE V-9

EPA I.D. NUMBER (*copy from Item 1 of Form 1*)	OUTFALL NUMBER
WY-0024945	001

CONTINUED FROM PAGE V-8

1. POLLUTANT AND CAS NUMBER (*if available*)	2. MARK "X"			3. EFFLUENT							4. UNITS		5. INTAKE (*optional*)		
	a. TESTING REQUIRED	b. BELIEVED PRESENT	c. BELIEVED ABSENT	a. MAXIMUM DAILY VALUE		b. MAXIMUM 30 DAY VALUE (*if available*)		c. LONG TERM AVRG. VALUE (*if available*)		d. NO. OF ANALYSES	a. CONCEN-TRATION	b. MASS	a. LONG TERM AVERAGE VALUE		b. NO. OF ANALYSES
				(1) CONCENTRATION	(2) MASS	(1) CONCENTRATION	(2) MASS	(1) CONCENTRATION	(2) MASS				(1) CONCENTRATION	(2) MASS	
GC/MS FRACTION – PESTICIDES (*continued*)															
17P. Heptachlor Epoxide (1024-57-3)			X												
18P. PCB-1242 (53469-21-9)			X												
19P. PCB-1254 (11097-69-1)			X												
20P. PCB-1221 (11104-28-2)			X												
21P. PCB-1232 (11141-16-5)			X												
22P. PCB-1248 (12672-29-6)			X												
23P. PCB-1260 (11096-82-5)			X												
24P. PCB-1016 (12674-11-2)			X												
25P. Toxaphene (8001-35-2)			X												