Underground Injection Control
Carbon Sequestration
Class VI Permit Application

QUALITY ASSURANCE AND SURVEILLANCE PLAN
40 CFR 146.90(k)
Section 8.9

Four Corners Carbon Storage, LLC
San Juan Basin, New Mexico Carbon Sequestration Project

June 2023

Prepared by:

Kevin Bush (Subsurface Director)
Katy Larson (UIC Coordinator)
Four Corners Carbon Storage, LLC
4200 West 115th Street
Leawood, KS 66211

Numeric Solutions, LLC.
1536 Eastman Ave., Suite D
Ventura, CA 93003

QUALITY ASSURANCE AND SURVEILLANCE PLAN
40 CFR 146.90(k)

Four Corners Carbon Storage, LLC – Injector 1

Facility Information

Facility name: **San Juan Basin, New Mexico Carbon Sequestration Project**
Injector 1

Facility contacts:

Kyle Quackenbush | Segment President – Liquids
Four Corners Carbon Storage, LLC
370 Van Gordon Street
kyle.quackenbush@tallgrass.com

Kevin Bush | Director Subsurface
Four Corners Carbon Storage, LLC
370 Van Gordon Street
kevin.bush@tallgrass.com

Katy Larson | UIC Coordinator
Four Corners Carbon Storage, LLC
370 Van Gordon Street
katy.larson@tallgrass.com

Well location: San Juan County, New Mexico
[redacted]

[1] North American Datum 1983

TABLE OF CONTENTS

TABLE OF CONTENTS 3
LIST OF FIGURES 7
LIST OF TABLES 7
LIST OF EQUATIONS 8
LIST OF APPENDICES 8
ACRONYMS AND ABBREVIATIONS 8
TITLE AND APPROVAL SHEET 10
DISTRIBUTION LIST 11
8 TESTING AND MONITORING PLAN (CONT.) 12
8.9 QUALITY ASSURANCE AND SURVEILLANCE PLAN 12
A. PROJECT MANAGEMENT 12
A.1. Project/Task Organization 12
A.1.a. Key Individuals and Responsibilities 12
A.1.b. Independence from Project Quality Assurance Manager and Data Gathering 12
A.1.c. Quality Assurance Project Plan Responsibility 12
A.1.d. Organizational Chart for Key Project Personnel 12
A.2. Project Definition/Background 13
A.2.a. Reasoning 13
A.2.b. Reasons for Initiating the Project 14
A.3. Project/Task Description 14
A.3.a. Summary of Work to be Performed 14
A.3.b. Geographic Locations 18
A.3.c. Resource and Time Constraints 19
A.4. Quality Objectives and Criteria 19
A.4.a. Performance/Measurement Criteria 19
A.4.b. Precision 25
A.4.c. Bias 25
A.4.d. Representativeness 25
A.4.e. Completeness 26
A.4.f. Comparability 26
A.4.g. Method Sensitivity 26
A.5. Special Training/Certifications 28

A.5.a. Specialized Training and Certifications 28
A.5.b. Training Provider and Responsibility 28

A.6. Documentation and Records 28
A.6.a. Report Format and Package Information 28
A.6.b. Other Project Documents, Records, and Electronic Files 28
A.6.c. Data Storage and Duration 29
A.6.d. Quality Assurance and Surveillance Plan Distribution Responsibility 29

B. DATA GENERATION AND ACQUISITION 29

B.1. SAMPLING PROCESS DESIGN 29
B.1.a. Design Strategy 29
B.1.a.i. CO_2 Stream Monitoring Strategy 29
B.1.a.ii. Corrosion Monitoring Strategy 30
B.1.a.iii. Groundwater Monitoring Strategy 30
B.1.a.iv. Soil Sampling Strategy 30
B.1.b. Type and Number of Samples/Test Runs 30
B.1.c. Site/Sampling Locations 31
B.1.d. Sampling Site Contingency 31
B.1.e. Activity Schedule 31
B.1.f. Critical/Informational Data 31
B.1.g. Sources of Variability 31

B.2. Sampling Methods 32
B.2.a. Sampling Standard Operation Procedures 32
B.2.b. In-situ Monitoring 33
B.2.c. Continuous Monitoring 33
B.2.d. Sample Homogenization, Composition, Filtration 33
B.2.e. Sample Containers and Volumes 33
B.2.f. Sample Preservation 34
B.2.g. Cleaning/Decontamination of Sampling Equipment 34
B.2.h. Support Facilities 34
B.2.i. Corrective Action, Personnel, and Documentation 35

B.3. Sample Handling and Custody 35
B.3.a. Maximum Hold Time/Time Before Retrieval 35
B.3.b. Sample Transportation 35
B.3.c. Sample Documentation 35
B.3.d. Sample Identification 36
B.3.e. Sample Chain-of-Custody 36

B.4. Analytical Methods ... 37
B.4.a. Analytical Standard Operational Procedures (SOP) ... 38
B.4.b. Equipment/Instrumentation Needed ... 39
B.4.c. Method Performance Criteria ... 40
B.4.d. Analytical Failure ... 40
B.4.e. Sample Disposal ... 41
B.4.f. Laboratory Turnaround ... 41
B.4.g. Method Validation for Non-Standard Methods ... 41

B.5. Quality Control ... 41
B.5.a. Quality Control Activities ... 41
B.5.a.i. Blanks ... 41
B.5.a.ii. Duplicates ... 43
B.5.b. Exceeding Control Limits ... 43
B.5.c. Calculating Applicable Quality Control Statistics ... 43
B.5.c.i. Charge Balance ... 43
B.5.c.ii. Mass Balance ... 43
B.5.c.iii. Outliers ... 44

B.6. Instrument/Equipment Testing, Inspection, and Maintenance ... 44

B.7. Instrument/Equipment Calibration and Frequency ... 44
B.7.a. Calibration and Frequency of Calibration ... 44
B.7.b. Calibration Methodology ... 44
B.7.c. Calibration Resolution and Documentation ... 45

B.8. Inspection/Acceptance for Supplies and Consumables ... 45
B.8.a. Supplies, Consumables, and Responsibilities ... 45

B.9. Non-Direct Measurements ... 45
B.9.a. Data Sources ... 45
B.9.b. Relevance to Project ... 45
B.9.c. Acceptance Criteria ... 45
B.9.d. Resources/Facilities Needed ... 45
B.9.e. Validity Limits and Operating Conditions ... 45

B.10. Data Management ... 46
B.10.a. Data Management Scheme ... 46
B.10.b. Record-Keeping and Tracking Practices ... 46
B.10.c. Data Handling Equipment/Procedures ... 46
B.10.d. Responsibility ... 46

B.10.e. Data Archival and Retrieval 46
B.10.f. Hardware and Software Configurations 46
B.10.g. Checklists and Forms 46

C. ASSESSMENT AND OVERSIGHT 46

C.1. Assessments and Response Actions 46
C.1.a. Activities to be Conducted 46
C.1.b. Responsibility for Conducting Assessments 46
C.1.c. Assessment Reporting 47
C.1.d. Corrective Action 47

C.2. Reports to Management 47
C.2.a. QA Status Reports 47

D. DATA VALIDATION AND USABILITY 47

D.1. Data Review, Verification, and Validation 47
D.1.a. Criteria for Accepting, Rejecting, or Qualifying Data 47

D.2. Verification and Validation Methods 47
D.2.a. Data Verification and Validation Processes 47
D.2.b. Data Verification and Validation Responsibility 47
D.2.c. Issue Resolution Process and Responsibility 47
D.2.d. Checklist, Forms, and Calculations 48

D.3. Reconciliation with User Requirements 48
D.3.a. Evaluation of Data Uncertainty 48
D.3.b. Data Limitations Reporting 48

REFERENCES 48

APPENDICES 49

APPENDIX A—[redacted]

APPENDIX B—Schlumberger Wireline Log Quality Control Reference Manual 57

LIST OF FIGURES

Figure 8.9.1—Project organization structure. 13
Figure 8.9.2—Map of the Project area and wells. 18
Figure 8.9.3—Project timeline from feasibility through post-injection site care and closure. PTC = permit to construct, PTI = permit to inject. 19
Figure 8.9.4—Example of CO_2 gas stream analysis authorization form. 36
Figure 8.9.5—Example chain of custody form. 37

LIST OF TABLES

Table 8.9.1—Summary of testing and monitoring. 15
Table 8.9.2—Instrumentation summary. T=Temperature; P=Pressure; F=Flow. 16
Table 8.9.3—Geophysical surveys. 17
Table 8.9.4—Summary of analytical and field parameters for fluid samples in [redacted] . 21
Table 8.9.5—Summary of analytical methods for characterizing the CO_2 stream. 22
Table 8.9.6—Summary of analytical parameters for corrosion coupons. 23
Table 8.9.7—Summary of measurement parameters for field gauges. 24
Table 8.9.8—Actionable testing and monitoring outputs. 25
Table 8.9.9—Pressure and temperature—downhole gauge specifications. 26
Table 8.9.10—Representative surveillance logging tool specifications. 26
Table 8.9.11—Pressure field gauge. 26
Table 8.9.12—Pressure field gauge—injection tubing pressure. 27
Table 8.9.13—Pressure field gauge—annulus pressure. 27
Table 8.9.14—Temperature field gauge—injection tubing temperature. 28
Table 8.9.15—Mass flow rate field gauge—CO_2 mass flow rate. 28
Table 8.9.16—Site sampling locations. 31
Table 8.9.17—Stabilization criteria of water quality parameters during fluid purging. 33
Table 8.9.18—Summary of sample containers. 34
Table 8.9.19—Summary of sample containers, preservation treatments, and holding times for CO_2 gas stream analysis. 34

LIST OF EQUATIONS

Equation 8.9.1—Formula for anion-cation charge balance. 43
Equation 8.9.2—Ratio of measured vs. calculated TDS. 44

LIST OF APPENDICES

Appendix A—[redacted]

Appendix B—Schlumberger Wireline Log Quality Control Reference Manual

ACRONYMS AND ABBREVIATIONS

2D	two-dimensional
°C	degrees Celsius
µS/cm	microseimens per centimeter
A	
AoR	area of review
ASTM	American Society for Testing and Materials
C	
CBL	cement bond log
CG	gas chromatography
CO_2	carbon dioxide
D	
DAS	distributed acoustic sensing
DTS	distributed temperature survey
DO	dissolved oxygen
E	
EPA	U.S. Environmental Protection Agency
M	
MFL	Magnetic flux leakage casing inspection tool
meq	milliequivalents
MIT	mechanical integrity testing
MVA	monitoring, verification, and accounting
N	
NACE	National Associated of Corrosion Engineers
P	
PISC	post-injection site care and closure
Project	San Juan Basin, New Mexico Carbon Sequestration Project
PNL	pulsed neutron logging
Q	
QA	quality assurance
QASP	quality assurance and surveillance plan
QA/QC	quality assurance/quality control
QC	quality control
S	
SCADA	supervisory control and data acquisition

SOP	standard operating procedures
T	
TBD	to be determined
TDS	total dissolved solids
U	
UIC	Underground Injection Control
USDW	underground sources of drinking water
USIT	ultra sonic imager tool

TITLE AND APPROVAL SHEET

The Quality Assurance and Surveillance Plan (QASP) will be developed as details of the facility are finalized, including, but not limited to surface and sub-surface equipment and infrastructure, details of instrumentation, sampling and analytical procedures, organizational structure and personnel, and record keeping.

This QASP is approved for use and implementation at San Juan Basin, New Mexico Carbon Sequestration Project, Injector 1.

The signatures below denote the approval of this document and intend to abide by the procedures outlined within.

Signature	Date
Kyle Quackenbush	
Segment President	

Signature	Date
Katy Larson	
UIC Coordinator	

DISTRIBUTION LIST

The San Juan Basin, New Mexico Carbon Sequestration Project (Project) participants, acting as key project managers (listed below), will receive the completed QASP and all future updates for the duration of the Project.

Kyle Quackenbush | Segment President
Four Corners Carbon Storage, LLC
370 Van Gordon Street
Lakewood, CO 80228
kyle.quackenbush@tallgrass.com
T: 303-763-3319

Katy Larson | UIC Coordinator
Four Corners Carbon Storage, LLC
370 Van Gordon Street
Lakewood, CO 80228
katy.larson@tallgrass.com

8 TESTING AND MONITORING PLAN (CONT.)

8.9 Quality Assurance and Surveillance Plan

A. PROJECT MANAGEMENT

A.1. Project/Task Organization

A.1.a. Key Individuals and Responsibilities

Four Corners Carbon Project Managers will lead the Project with testing and monitoring activities shared among the Four Corners Carbon staff. The Project is divided into five subcategories:

- Groundwater Monitoring Well Logging
- Mechanical Integrity Testing (MIT)
- Pressure/Temperature Monitoring
- Carbon Dioxide (CO_2) Stream Analysis
- Geophysical Monitoring

A.1.b. Independence from Project Quality Assurance Manager and Data Gathering

The Testing and Monitoring Plan data is analyzed, processed, or witnessed by independent third parties outside the Project management structure.

A.1.c. Quality Assurance Project Plan Responsibility

Four Corners Carbon is responsible for maintaining and periodically distributing an official approved Quality Assurance (QA) Project Plan. Four Corners Carbon will periodically review this QASP and will consult with the U.S. Environmental Protection Agency (EPA) if changes to the plan are warranted.

A.1.d. Organizational Chart for Key Project Personnel

The Project organizational structure is provided in **Figure 8.9.1**. Four Corners Carbon will provide the Program Director a contact list of individuals fulfilling these roles.

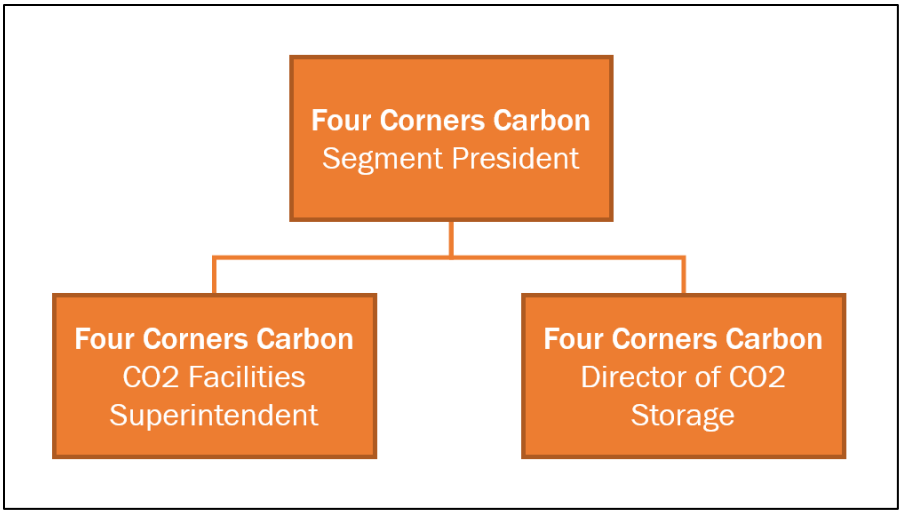

Figure 8.9.1—Project organization structure.

A.2. Project Definition/Background

A.2.a. Reasoning

Four Corners Carbon proposes drilling and completing a carbon sequestration injection well (Injector 1) and monitoring well (Monitor 1) for the safe sequestration of carbon dioxide (the "Project") [redacted] Strat 1[2] is utilized as the project characterization well. The Four Corners Project monitoring, verification, and accounting (MVA) program consists of three components: operational, verification, and environmental monitoring. Operational monitoring ensures safety with all procedures associated with fluid injection, monitoring the response of the injection zone, and movement of the CO_2 plume. Key monitoring parameters include:

- Tubing and annulus pressure of Injector 1
- Injection zone pressure monitoring in Monitor 1
- Confining zone integrity
- Lowermost underground source of drinking water (USDW)

Additional monitoring parameters include injection rate, total volume injected, injection well temperature profiles, and [redacted] The verification and environmental components inform Four Corners Carbon if CO_2 leaks through the caprock and is released into the shallow subsurface or biosphere. At the well bore, [redacted]) as well as pressure and temperature monitoring are utilized across protected groundwater intervals and the confining zone. [redacted] will also be utilized to determine whether large amounts of CO_2 leakage is occurring, although this method has a time delay.

[redacted].

A.2.b. Reasons for Initiating the Project

The goal of the injection Project is to permanently sequester industrial-scale volumes of CO_2 to reduce atmospheric concentrations of CO_2. A strict MVA Plan is proposed to demonstrate that injected CO_2 is retained within the [redacted]

The Class VI Rule requires owners or operators of Class VI wells perform several methods of monitoring activities during the lifetime of the Project. This is done to ensure that:

- The injection well maintains mechanical integrity
- Fluid migration and pressure increase are within the limits described in the permit application
- USDWs are not altered

Monitoring activities include MITs (Mechanical Integrity Tests), injection well testing, ground water monitoring, and CO_2 plume and pressure front monitoring. This document details both the measurements taken and the steps to ensure that the quality of all the data is such that the data can be used with confidence in making decisions during the life of the Project.

A.3. Project/Task Description

A.3.a. Summary of Work to be Performed

Table 8.9.1 provides a summary of the testing and monitoring tasks for the Project and **Table 8.9.2** provides details of the instrumentation that will be installed and used for monitoring. **Table 8.9.3** shows the geophysical monitoring tools and timelines.

Table 8.9.1—Summary of testing and monitoring.

Activity	Location(s)	Method	Analytical Technique	Pre-injection Baseline	Operation Period 30 years	PISC Period 20 years	Lab/ Custody	Purpose
Carbon Dioxide Stream Analysis	Compressor	[redacted]	[redacted]	[redacted]	[redacted]	[redacted]	[redacted]	[redacted]
Injection Rate and Volume	After compression	[redacted]	[redacted]	[redacted]	[redacted]	[redacted]	[redacted]	[redacted]
Injection Pressure	Injector 1	[redacted]	[redacted]	[redacted]	[redacted]	[redacted]	[redacted]	[redacted]
Annular Pressure	Injector 1	[redacted]	[redacted]	[redacted]	[redacted]	[redacted]	[redacted]	[redacted]
Downhole Pressure/ Temperature	[redacted]	[redacted]	[redacted]	[redacted]	[redacted]	[redacted]	[redacted]	[redacted]
	[redacted]				Annually			
Corrosion Monitoring	[redacted]	[redacted]	[redacted]	[redacted]	[redacted]	[redacted]	[redacted]	[redacted]
Mechanical Integrity	[redacted]	[redacted]	[redacted]	[redacted]	[redacted]	[redacted]	[redacted]	[redacted]
Mechanical Integrity	[redacted]	[redacted]	[redacted]	[redacted]	[redacted]	[redacted]	[redacted]	[redacted]
	[redacted]							
Mechanical Integrity	[redacted]	[redacted]	[redacted]	[redacted]	[redacted]	[redacted]	[redacted]	[redacted]

Activity	Location(s)	Method	Analytical Technique	Pre-injection Baseline	Operation Period 30 years	PISC Period 20 years	Lab/ Custody	Purpose
Cement Evaluation	Injector 1	[redacted]	[redacted]	[redacted]	[redacted]	[redacted]	[redacted]	[redacted]
Pressure Fall Off Testing	Injector 1	[redacted]	[redacted]	[redacted]	[redacted]	[redacted]	[redacted]	[redacted]
In-zone Monitoring	Monitor 1	[redacted]	[redacted]	[redacted]	[redacted]	[redacted]	[redacted]	[redacted]

[1] 40 CFR 146.87(a)(4) A series of tests designed to demonstrate the internal and external mechanical integrity of injection wells, which may include: a pressure test with liquid or gas, a tracer survey such as oxygen-activation logging, a temperature or noise log, a casing inspection log
[2] § 146.89 (c)(2) At least once per year, the owner or operator must use one of the following methods to determine the absence of significant fluid movement under paragraph (a)(2) of this section: an approved tracer survey such as an oxygen-activation log, or a temperature or noise log.

Table 8.9.2—Instrumentation summary. T=Temperature; P=Pressure; F=Flow.

Monitoring Location	Instrument Type	Monitoring Target	Data Collection Location(s)	Explanation
CO_2 Facility	T, P, F	Surface	Discharge of high-pressure pumps	Monitoring the operation, equipment, and permit parameters
Monitor 1	T, P	Surface well head	Tubing	Monitoring operation, equipment, and permit parameters
			Annulus	
	P	[redacted]	At the perforations, depth TBD	Monitoring operation, equipment, and permit parameters
Injector 1	T, P	Surface well head	Tubing	Monitoring operation, equipment, and permit parameters
			Annulus	
	P	[redacted]	At the perforations, depth under review	Monitoring operation, equipment, and permit parameters

Table 8.9.3—Geophysical surveys.

Monitoring Activity	Well	Tool or Survey	Pre-Injection Baseline	Injection Phase Repeat Survey Interval	PISC Repeat Survey Interval	Description
Logging	Injector 1 Monitor 1	[redacted]	1 Baseline	5 years	None	Mechanical integrity
Logging	Injector 1 Monitor 1	[redacted]	1 Baseline	1 year	Under Review	Fluid migration, salinity, CO_2 detection
Logging	Injector 1 Monitor 1	Temperature log	1 Baseline	1 year	Under Review	Mechanical integrity
Logging	Injector 1 Monitor 1	[redacted]	1 Baseline	5 years	Under Review	Mechanical integrity
[redacted]	[redacted]	[redacted]	[redacted]	[redacted]	[redacted]	[redacted]

A.3.b. Geographic Locations

Figure 8.9.2 depicts the Project area, the location of the Injector 1, Monitor 1, and the Strat 1. The location and design of monitoring infrastructure is in progress and will iteratively be added to the map.

[redacted]

Figure 8.9.2—Map of the Project area and wells.

A.3.c. Resource and Time Constraints

Four Corners Carbon does not anticipate any additional resource or time constraints for the Testing and Monitoring Plan beyond Project funding levels and the proposed timeline outlined in **Figure 8.9.3**.

[redacted]

Figure 8.9.3—Project timeline from feasibility through post-injection site care and closure. PTC = permit to construct, PTI = permit to inject.

A.4. Quality Objectives and Criteria

A.4.a. Performance/Measurement Criteria

This QASP provides confidence that the underground storage Project is operating as planned and permitted; thus, the Project is not altering USDWs. Groundwater monitoring will be conducted during the pre-injection, injection and post-injection phases of the Project using [redacted]. All fluid analytical and field monitoring parameters for [redacted] are listed in **Table 8.9.4**.

Table 8.9.5 through **Table 8.9.8** show analytical parameters for CO_2 stream monitoring, corrosion coupon assessment, and gauge specifications.

Key testing and monitoring areas include:

Well Logging

- [redacted] to monitor shallow and deep groundwater zones
- Cement bond log (CBL)
- Temperature log

MIT

- [redacted] to detect casing metal loss, temperature, or cement evaluation logging

Pressure/Temperature Monitoring

- Pressure/temperature from in-situ gauges

CO_2 Stream Analysis

- CO_2 Stream Analysis
- CO_2 Purity (% v/v, [GC])
- Oxygen (O_2, ppm v/v)
- Nitrogen (N_2, ppm v/v)
- Carbon Monoxide (CO, ppm v/v)
- Oxides of Nitrogen (NO_X, ppm v/v)
- Total Hydrocarbons (THC, ppm v/v as CH_4)
- Acetaldehyde (AA, ppm v/v)
- Sulfur Dioxide (SO_2, ppm v/v)
- Hydrogen Sulfide (H_2S ppm v/v)
- Ethanol (ppm v/v) Methane (CH_4, ppm v/v)

Table 8.9.4—Summary of analytical and field parameters for fluid samples in [redacted]

Parameters	Analytical Methods[1]	Detection Limit/Range	Typical Precisions	QC Requirements
Cations: Al, Ba, Mn, As, Cd, Cr, Cu, Pb, Sb, Se, and Tl	ICP-MS, EPA Method 6020	0.001 to 0.1 mg/L (analyte, dilution and matrix dependent)	±15%	Daily calibration; blanks, duplicates and matrix spikes at 10% or greater frequency
Cations: Ca, Fe, K, Mg, Na, and Si	ICP-OES, EPA Method 6010B	0.005 to 0.5 mg/L (analyte, dilution and matrix dependent)	±15%	Daily calibration; blanks, duplicates and matrix spikes at 10% or greater frequency
Anions: Br, Cl, F, NO_3, and SO_4	Ion Chromatography, EPA Method 300.0	0.02 to 0.13 mg/L (analyte, dilution and matrix dependent)	±15%	Daily calibration; blanks and duplicates at 10% or greater frequency
Dissolved CO_2	Coulometric titration, ASTM D513-11	25 mg/L	±15%	Duplicate measurement; standards at 10% or greater frequency
Total Dissolved Solids	Gravimetry; APHA 2540C	12 mg/L	±10%	Balance calibration, duplicate analysis
Alkalinity	APHA 2320B	4 mg/L	±3 mg/L	Duplicate analysis
pH (field)	EPA 150.3	2 to 12 pH units	±0.2 pH unit	User calibration per manufacturer recommendation
Specific conductance (field)	APHA 2510	0 to 200 mS/cm	±1% of reading	User calibration per manufacturer recommendation
Temperature (field)	Thermocouple	-5 to 50°C	±0.2°C	Factory calibration

Note 1: Once the laboratory is confirmed all analytical methods will meet or exceed the above, and an equivalent method may be employed with the prior approval of the UIC Program Director

Table 8.9.5—Summary of analytical methods for characterizing the CO_2 stream.

Parameters	Analytical Methods[1]	Detection Limit/Range	Typical Precisions	QC Requirements
Oxygen	ISBT 4.0 (GC/DID)	1 uL/L to 5,000 uL/L (ppm by volume)	±10% of reading	daily standard within 10% of calibration, secondary standard after calibration
Oxygen	GC/TCD	0.1% to 100%–5 - 10% relative across the range, RT ±0.1 min	daily standard, duplicate analysis within 10% of each other	daily standard, duplicate analysis within 10% of each other
Nitrogen	ISBT 4.0 GC/DID	1 uL/L to 5,000 uL/L (ppm by volume)	±10% of reading	daily standard within 10% of calibration, secondary standard after calibration
Nitrogen	GC/TCD	0.1% to 100%–5 - 10% relative across the range, RT ±0.1 min	daily standard, duplicate analysis within 10% of each other	daily standard, duplicate analysis within 10% of each other
Carbon Monoxide	ISBT 5.0 Colorimetric	5 uL/L to 100 uL/L (ppm by volume)	±20% of reading	duplicate analysis
Carbon Monoxide	ISBT 4.0 (GC/DID)	1 uL/L to 5,000 uL/L (ppm by volume)	±10% of reading	daily standard within 10% of calibration, secondary standard after calibration
Oxides of Nitrogen	ISBT 7.0 Colorimetric	0.2 uL/L to 5 uL/L (ppm by volume)	±20% of reading	duplicate analysis
Total Hydrocarbons	ISBT 10.0 THA (FID)	1 uL/L to 10,000 uL/L (ppm by volume)	5–10% of reading relative across the range	daily blank, daily standard within 10% of calibration, secondary standard after calibration
Methane	ISBT 10.1 (GC/FID)	0.1 uL/L to 1,000 uL/L (ppm by volume)-dilution dependent	5–10% of reading relative across the range	daily blank, daily standard within 10% of calibration, secondary standard after calibration
Acetaldehyde	ISBT 11.0 (GC/FID)	0.1 uL/L to 100 uL/L (ppm by volume)-dilution dependent	5–10% of reading relative across the range	daily blank, daily standard within 10% of calibration, secondary standard after calibration
Sulfur Dioxide	ISBT 14.0 (GC/SCD)	0.01 uL/L to 50 uL/L (ppm by volume)-dilution dependent–	5–10% of reading relative across the range	daily blank, daily standard within 10% of calibration, secondary standard after calibration

Parameters	Analytical Methods[1]	Detection Limit/Range	Typical Precisions	QC Requirements
Hydrogen Sulfide	ISBT 14.0 (GC/SCD)	0.01 uL/L to 50 uL/L (ppm by volume)-dilution dependent	5–10% of reading relative across the range	daily blank, daily standard within 10% of calibration, secondary standard after calibration
Ethanol	ISBT 11.0 (GC/FID)	0.1 uL/L to 100 uL/L (ppm by volume)-dilution dependent	5–10% of reading relative across the range	daily blank, daily standard within 10% of calibration, secondary standard after calibration
CO_2 Purity	ISBT 2.0 Caustic absorption Zahm-Nagel	99.00% to 99.99%	±10% of reading	
CO_2 Purity	ALI method SAM 4.1 subtraction method (GC/DID)	1 ppm for each target analyte (analyte dependent–) - refer to Oxygen and Nitrogen analysis	5–10% relative across the range	duplicate analysis within 10% of each other

Note 1: An equivalent method may be employed with the prior approval of the UIC Program Director.

Table 8.9.6—Summary of analytical parameters for corrosion coupons.

Parameters	Analytical Methods[1]	Detection Limit/Range	Typical Precisions	QC Requirements
Mass	NACE RP0775-2005	0.005 mg	±2%	Annual Calibration of Scale (3rd Party Aldinger Co. – Cert #664896F)
Thickness	NACE RP0775-2005	0.001 mm	±0.005 mm	Factory calibration

Note 1: Once the laboratory is confirmed all analytical methods will meet or exceed the above, and an equivalent method may be employed with the prior approval of the UIC Program Director

Table 8.9.7—Summary of measurement parameters for field gauges.

Parameters	Methods[1]	Detection Limit/Range	Typical Precisions	QC Requirements
Booster pump discharge pressure	ANSI Z540-1-1994	±0.001 psi / 0–3,000 psi	±0.01 psi	Annual Calibration of Scale (3rd party)
Injection tubing temperature	ANSI Z540-1-1994	±0.001°F / 0–500°F	±0.01°F	Annual Calibration of Scale (3rd party)
Annulus pressure	ANSI Z540-1-1994	±0.001 psi / 0–3,000 psi	±0.01 psi	Annual Calibration of Scale (3rd party)
Injection tubing pressure	ANSI Z540-1-1994	±0.001 psi / 0–3,000 psi	±0.01 psi	Annual Calibration of Scale (3rd party)
Injection mass flow rate	Under review	±0.1000% of rate / 50,522–303,133 lbm/hr	±0.01 lbm/hr	Annual Calibration of Scale (3rd party)

Note 1: An equivalent method may be employed with the prior approval of the UIC Program Director.

Table 8.9.8—Actionable testing and monitoring outputs.

Activity or Parameter	Project Action Limit	Detection Limit	Anticipated Reading
External mechanical integrity (temperature log, [redacted] log)	Action will be taken when there is a significant anomaly in the temperature profile	Under review	Under review
Internal mechanical integrity [redacted] log, Multi arm caliper)	Action will be taken when internal wellbore integrity shows significant signs of degradation	Under review	Under review
Surface and downhole pressure	Action will be taken when pressures are outside modeled/expected range	Under review	Under review
[redacted]	Action taken when [redacted] indicates CO_2 outside of pre-injection baseline range	±0.5 SIGM	TBD based on pre-injection baseline readings
[redacted]	Detect CO_2 outside the AoR	Dependent on fluid saturation, formation velocity and density	CO_2 plume migration similar to modeled outcome
Above-confining-zone pressure [redacted]	Action will be taken when pressures are outside modeled/expected range	Under review	Under review

A.4.b. Precision

[redacted] fluid sample data precision will be assessed by the collection and analysis of field blanks to test sampling procedures and matrix spikes to test lab procedures. Field blanks will be taken no less than one per sampling event to spot check for sample bottle contamination. Laboratory assessment of analytical precision will be the responsibility of the individual laboratories per their standard operating procedures.

Table 8.9.9 summarizes the specifications of each monitoring method. Direct pressure and logging measurement precision data is presented in **Table 8.9.10**.

A.4.c. Bias

Laboratory assessment of analytical bias will be the responsibility of the individual laboratories per their standard operating procedures and analytical methodologies. For direct pressure or logging measurements, there is no bias.

A.4.d. Representativeness

For [redacted] fluid sampling, data representativeness expresses the degree to which data accurately and precisely represents a characteristic of a population, parameter variations at a sampling point, a process condition, or an environmental condition. A sampling network was designed to provide data representative of site conditions. For analytical results of individual groundwater samples, representativeness will be estimated by ion and mass balances. Ion balances with ±10% error or less will be considered valid. Mass balance assessment will be used in cases where the ion balance is greater than ±10% to help determine the source of error. For a sample and its duplicate, if the relative percent difference is greater than 10%, the sample may be considered non-representative.

A.4.e. Completeness

For [redacted] fluid sampling, data completeness is a measure of the amount of valid data obtained from a measurement system compared to the amount that was expected to be obtained under normal conditions. It is anticipated that data completeness of 90% for [redacted] fluid sampling will be acceptable to meet monitoring goals. For direct pressure and temperature measurements, it is expected that data will be recorded no less than 90% of the time.

A.4.f. Comparability

Data comparability expresses the confidence with which one data set can be compared to another. The data sets to be generated by this Project will be very comparable to future data sets because of the use of standard methods and the level of quality assurance/quality control (QA/QC) effort. Direct pressure, temperature, and logging measurements will be directly comparable to previously obtained data.

A.4.g. Method Sensitivity

Table 8.9.9 through **Table 8.9.15** provide additional details on gauge specifications and sensitivities.

Table 8.9.9—Pressure and temperature—downhole gauge specifications.

Parameter	Value
Calibrated working pressure range	10,000 psia
Initial pressure accuracy	±0.02%
Pressure resolution	0.01 psi or better
Pressure drift stability	Under Review
Calibrated working temperature range	25°C to 125°C
Initial temperature accuracy	0.5°C
Temperature resolution	0.005°C
Temperature drift stability	Under Review
Max temperature	200°C
Instrument calibration frequency	Under Review

Note: psia=ambient pressure

Table 8.9.10—Representative surveillance logging tool specifications.

Parameter	Value
Logging speed	1,800 ft/hr
Vertical resolution	2.5 ft
Investigation	~6 in.
Temperature rating	< 300°F
Pressure rating	< 15,000 psi

Table 8.9.11—Pressure field gauge.

Parameter	Value
Calibrated working pressure range	0 to 3,000
Initial pressure accuracy	Under review
Pressure resolution	0.001 psi and 0.00001 mA
Pressure drift stability	Under Review

Table 8.9.12—Pressure field gauge—injection tubing pressure.

Parameter	Value
Calibrated working pressure range	0 to 3,000
Initial pressure accuracy	Under review
Pressure resolution	0.001 psi and 0.00001 mA
Pressure drift stability	Under Review

Table 8.9.13—Pressure field gauge—annulus pressure.

Parameter	Value
Calibrated working pressure range	0 to 3,000
Initial pressure accuracy	Under review
Pressure resolution	0.001 psi and 0.00001 mA
Pressure drift stability	Under Review

Table 8.9.14—Temperature field gauge—injection tubing temperature.

Parameter	Value
Calibrated working temperature range	0 to 500°F
Initial temperature accuracy	Under review
Temperature resolution	0.001°F and 0.0001 mA
Temperature drift stability	Under Review

Table 8.9.15—Mass flow rate field gauge—CO_2 mass flow rate.

Parameter	Value
Calibrated working flow rate range	Under review
Initial mass flow rate accuracy	Under review
Mass flow rate resolution	Under review
Mass flow rate drift stability	Under review

A.5. Special Training/Certifications

A.5.a. Specialized Training and Certifications

The geophysical survey equipment and wireline logging tools will be operated by trained, qualified, and certified personnel, according to the service company which provides the equipment. The subsequent data will be processed and analyzed according to industry standards (Appendix B). Trained personnel conducting groundwater sampling are not required to have specialized certifications. Groundwater sampling will be conducted by personnel trained to understand and follow the Project specific sampling procedures. Upon request, Four Corners Carbon will provide the agency with all laboratory standard operation procedures (SOPs) developed for the specific parameter using the appropriate standard method. Each laboratory technician conducting the analysis will be trained on the SOP developed for each standard method. Four Corners Carbon will include the technician's training certification with the biannual report.

A.5.b. Training Provider and Responsibility

Training for personnel will be provided by the operator or by the subcontractor responsible for the data collection activity.

A.6. Documentation and Records

A.6.a. Report Format and Package Information

A semi-annual report from Four Corners Carbon to EPA will contain all required Project data, including testing and monitoring information as specified by the UIC Class VI Permit. Data will be provided in electronic or other format as required by the UIC Program Director.

A.6.b. Other Project Documents, Records, and Electronic Files

Other documents, records, and electronic files such as well logs, test results, or other data will be provided as required by the UIC Program Director.

A.6.c. Data Storage and Duration

Four Corners Carbon or a designated contractor will maintain the required Project data as provided elsewhere in the permit.

A.6.d. Quality Assurance and Surveillance Plan Distribution Responsibility

The Four Corners Carbon Director - Subsurface will be responsible for ensuring that all those on the distribution list will receive the most current copy of the approved QASP.

B. DATA GENERATION AND ACQUISITION

This section focuses on fluid sampling and does not address monitoring methods that do not gather physical samples (e.g., logging, seismic monitoring, and pressure/temperature monitoring).

During the pre-injection and injection phases, fluid sampling in [redacted] is planned to include an extensive set of chemical parameters to establish aqueous geochemical reference data. Parameters will include selected constituents that:

- Are the most responsive to interaction with CO_2 or brine
- Are needed for QC
- May be needed for geochemical modeling

The full set of parameters for [redacted] is provided in Table 8.9.4. After a sufficient baseline is established, monitoring scope may shift to a subset of indicator parameters that are:

- The most responsive to interaction with CO_2 or brine
- Are needed for QC

Implementation of a reduced set of parameters would be performed in consultation with the EPA. All samples will be analyzed by a third-party laboratory. Dissolved CO_2 will be analyzed by methods consistent with Test Method B of ASTM D 513-06, *Standard Test Methods for Total and Dissolved Carbon Dioxide in Water* or equivalent.

B.1. SAMPLING PROCESS DESIGN

B.1.a. Design Strategy

B.1.a.i. CO_2 Stream Monitoring Strategy

The CO_2 injection stream will be analyzed with sufficient frequency to yield data representative of its chemical and physical characteristics. The objective of this analysis is to evaluate the potential interactions of CO_2 and other constituents of the injectate with formation solids, fluids, or any components of the injection system. Testing will be conducted using gas chromatography analysis. This analysis will also test for constituents that include sulfur dioxide, hydrogen sulfide, nitrogen oxides, hydrocarbons, carbon monoxide, methane, water vapor, nitrogen, oxygen, mercury, and arsenic. The gas chromatography equipment will meet American Society for Testing and Materials (ASTM) testing standards.

B.1.a.ii. Corrosion Monitoring Strategy

A corrosion coupon system will be installed, and the coupons will be deployed upstream of the wellhead through which the injection stream passes. This monitoring method will detect any possible metal loss due to the chemical or electrochemical reactions that may result in loss of mass or thickness or pitting of injection well components. The coupons will be prepared, analyzed, installed, and QA/QC protocols will be implemented using the National Association of Corrosion Engineers (NACE) RP-0775 and ASTM Standards G1 and G4.

B.1.a.iii. Groundwater Monitoring Strategy

Four Corners Carbon will use pulsed neutron logging and pressure and temperature monitoring at Injector 1 and Monitor 1 for early leakage detection in formations above the [redacted] caprock. Baseline [redacted] ogs will be run to accurately characterize baseline or pre-injection conditions of the injection zone, confining zones, and first permeable zone above the confining zone in subsequent surveillance logging. With the planned monitoring frequencies, it is expected that baseline conditions can be documented, natural variability in conditions can be characterized, unintended brine or CO_2 leakage could be detected should it occur, and sufficient data will be collected to demonstrate that the effects of CO_2 injections are limited to the intended storage reservoir. Ground water sampling and analysis from several ground water monitoring wells will take place prior to and during injection.

B.1.a.iv. Soil Sampling Strategy

Four Corners Carbon does not have plans to monitor the soil within the area of review (AoR). If deemed necessary in the future by the UIC Program Director, Four Corners Carbon will develop a Soil Monitoring Plan that will include sampling plans and station locations.

B.1.b. Type and Number of Samples/Test Runs

[redacted] fluid sampling frequency is detailed in Table 8.9.1. CO_2 gas stream and corrosion coupon frequencies are detailed in Table 8.9.1.

B.1.c. Site/Sampling Locations

Table 8.9.16—Site sampling locations.

Well Name	Latitude*	Longitude*	PLSS
Injector 1	[redacted]	[redacted]	[redacted]

* NAD83

B.1.d. Sampling Site Contingency

No problems of site accessibility are expected at the Injector 1 location. If inclement weather makes site access difficult, sampling schedules will be reviewed and alternative dates may be selected that would still meet permit-related conditions.

No problems of site accessibility are expected for CO_2 gas stream or corrosion coupon sampling. If inclement weather makes site access difficult, sampling schedules will be reviewed and alternative dates may be selected that would still meet permit-related conditions.

B.1.e. Activity Schedule

[redacted] fluid sampling activities and frequency are detailed in Table 8.9.1. CO_2 gas stream and corrosion coupon frequencies are detailed in Table 8.9.1.

B.1.f. Critical/Informational Data

During [redacted] fluid sampling and analytical efforts, detailed field and laboratory documentation will be taken. Documentation will be recorded in field and laboratory forms and notebooks. Critical information will include time and date of activity, person/s performing activity, location of activity (wellfield sampling) or instrument (lab analysis), field or laboratory instrument calibration data, field parameter values. For laboratory analyses, much of the critical data are generated during the analysis and provided to end users in digital and printed formats. Non-critical data may include appearance and odor of the sample, problems with well or sampling equipment, and weather conditions.

B.1.g. Sources of Variability

Potential sources of variability related to monitoring activities include:

- Natural variation in fluid quality, formation pressure and temperature, and seismic activity
- Variation in fluid quality, formation pressure and temperature, and seismic activity due to Project operations
- Changes in instrument calibration during sampling or analytical activity
- Different staff collecting or analyzing samples
- Differences in environmental conditions during field sampling activities
- Changes in analytical data quality during life of Project
- Data entry errors related to maintaining Project database

Activities to eliminate, reduce, or reconcile variability related to monitoring activities include:

- Collecting long-term baseline data to observe and document natural variation in monitoring parameters

- Evaluating data in timely manner after collection to observe anomalies in data that can be addressed be resampled or reanalyzed
- Conducting statistical analysis of monitoring data to determine whether variability in a data set is the result of Project activities or natural variation
- Maintaining weather related data using on-site weather monitoring data or data collected near Project site (such as from local airports)
- Checking instrument calibration before, during and after sampling or sample analysis
- Thoroughly training staff,
- Conducting laboratory QA checks using third party reference materials, and/or blind and/or replicate sample checks
- Developing a systematic review process of data that can include sample-specific data quality checks (i.e., cation/anion balance for aqueous samples).

B.2. Sampling Methods

Logging, geophysical monitoring, and pressure/temperature monitoring does not apply to this section and is omitted.

B.2.a. Sampling Standard Operation Procedures

A typical fluid sampling event from Injector 1 will include an initial check to determine the well's operational status and any changes to the physical appearance of the well head since the previous event. For pump tests on new monitoring wells across the plume extent, if required, contractor personnel will check with the equipment operator and record the pump initiation time, rate of operation, nature of discharge, and any other specifics relative to water quality characteristics. To ensure the collection of a representative sample, a contractor staff will collect a series of preliminary water quality data using a water quality meter prior to collecting an aliquot(s) for the analytical laboratory sample. The monitored parameters are outlined in **Table 8.9.17**. Water quality conditions are typically monitored for at least 10 minutes or at least 1 casing volume of discharge then allowed to stabilize within 10 percent (%) prior to collecting samples for laboratory analysis. Subsequently, fluid samples collected for laboratory analysis are obtained via direct capture of liquid from the sample port into clean, unused, unpreserved laboratory analytical method-specific containers. After collection, each container is labeled with a sample identification and the date and time of collection. This information is also recorded in field logs and on a chain of custody form.

Soon after collection, [redacted] fluid samples will be stored in ice chests and entered into the chain of custody protocol. At the completion of each sampling day, samples are either transported directly to the laboratory or stored in a refrigerator for transport to the laboratory on the following day.

Occasionally, weather conditions or operational parameters require minor modifications to these procedures. Such changes are noted in field logs and, if significant, are appended as notes in the water chemistry data management system. In some cases, wells or surface water locations are excluded from sampling events due to the non-operational status of wells, lack of safe access to sampling points, or major changes to a location that preclude collection of a representative sample. Such conditions are noted in field logs and maintained in Four Corners Carbon's data management system.

Table 8.9.17—Stabilization criteria of water quality parameters during fluid purging.

Field Parameter	Stabilization Criteria
pH ±0.2 units	pH ±0.2 units
Temperature ±1°C	Temperature ±1°C
Specific Conductance ±3% of reading in µS/cm	Specific Conductance ±3% of reading in µS/cm
Dissolved Oxygen ±10% of reading or 0.3 mg/L whichever is greater	Dissolved Oxygen ±10% of reading or 0.3 mg/L whichever is greater

B.2.b. In-situ Monitoring

Four Corners Carbon does not plan to perform in-situ monitoring of groundwater chemistry.

B.2.c. Continuous Monitoring

Four Corners Carbon will collect periodic pressure data (e.g., hourly to daily) from Injector 1, and Monitor 1.

B.2.d. Sample Homogenization, Composition, Filtration

See **Section B.2.a Sampling Standard Operating Procedures** for details on sample homogenization, composition, and filtration.

B.2.e. Sample Containers and Volumes

Stream monitoring samples for CO_2 will be collected in a clean sample container rated for the appropriate collection pressure (i.e. mini cylinders or polybags provided by Airborne Labs International Inc., Somerset, NJ or a similar lab).

Assay for CO_2 Quarterly Gas Analysis:

- CO_2 Purity (% v/v, [GC])
- Oxygen (O_2, ppm v/v)
- Nitrogen (N_2, ppm v/v)
- Carbon Monoxide (CO, ppm v/v)
- Oxides of Nitrogen (NOx, ppm v/v)
- Total Hydrocarbons (THC, ppm v/v as CH_4)
- Methane (CH_4, ppm v/v)
- Acetaldehyde (AA, ppm v/v)
- Sulfur Dioxide (SO_2, ppm v/v)
- Hydrogen Sulfide (H_2S ppm v/v)
- Ethanol (ppm v/v)

For [redacted] fluid samples, all sample bottles will be new. Sample bottles and bags for analytes will be used as received (i.e. ready for use) from the vendor or contract analytical laboratory for the analyte of interest. A summary of sample containers is presented in **Table 8.9.18**.

Table 8.9.18—Summary of sample containers.

Target Parameters	Volume/Container Material	Preservation Technique	Sample Holding Time
Cations: Ca, Fe, K, Mg, Na, Si, Al, Ba, Mn, As, Cd, Cr, Cu, Pb, Sb Se, Tl	250 ml/HDPE	Filtered, nitric acid, cool 4°C	60 days
Dissolved CO_2	2 × 60 ml/HDPE	Filtered, cool 4°C	14 days
Dissolved CO_2	60 ml/HDPE	Filtered, cool 4°C	14 days
Alkalinity, anions (Br, Cl, F, NO_3, SO_4)	500 ml/HDPE	Filtered, cool 4°C	45 days
Field Confirmation: Temperature, dissolved oxygen, specific conductance, pH	200 ml/glass jar	None	<1 hour
Field Confirmation: Density	60 ml/HDPE	Filtered	<1 hour

B.2.f. Sample Preservation

Table 8.9.18 provides sample preservation techniques for collected [redacted] fluid samples.

Sample preservation is not required or used for the CO_2 gas stream. Additional details of sampling requirements are shown in **Table 8.9.19**. Corrosion coupon sampling only requires that the coupons be physically separated (e.g., sleeves, baggies) during transportation to prevent physical abrasion.

Table 8.9.19—Summary of sample containers, preservation treatments, and holding times for CO_2 gas stream analysis.

Target Parameters	Volume/Container Material	Preservation Technique	Sample Holding Time (max)
CO_2 gas stream	(2) 2L MLB Polybags (1) 75 cc Mini Cylinder	Sample Storage Cabinets	5 business days

B.2.g. Cleaning/Decontamination of Sampling Equipment

A dedicated pump will be utilized for [redacted] fluid collect at Injector 1. The pump will be cleaned on the outside with a non-phosphate detergent and rinsed a minimum of three times with deionized water. A minimum of 1 liter of deionized water will be pumped through the pump and sample tubing prior to sampling. All field glassware (e.g., pipets, beakers, filter holders) are cleaned with tap water to remove any loose dirt, washed in a diluted nitric acid solution, and rinsed three times with deionized water before use.

CO_2 gas stream sampling containers will be either disposed of or decontaminated by the analytical lab.

No sampling equipment will be utilized with the corrosion coupons or annual field gauge calibrations.

B.2.h. Support Facilities

The following instruments are required to collect [redacted] fluid samples: air compressor, vacuum pump, generator, multi-electrode water quality sonde, analytical meters (e.g., pH, specific conductance). Field activities are usually completed in field vehicles and portable laboratory trailers located on site.

Sampling tubing, connectors and valves required to sample the CO_2 gas stream. These will be supplied by the analytical lab providing the sampling containers. Sampling will occur within the existing CO_2 compression building.

Similarly, corrosion coupons will be removed from the CO_2 injection line within the existing CO_2 compression building.

Field gauges will be removed from the injection and monitoring wells utilizing existing standard industry tools and equipment. Deployment and retrieval of well gauges will be performed using procedures and equipment recommended by the vendor, subcontractor, or is standard per industry practice.

B.2.i. Corrective Action, Personnel, and Documentation

An EPA certified laboratory and personnel will complete all sampling and analysis.

B.3. Sample Handling and Custody

Logging, seismic monitoring, and pressure/temperature monitoring does not apply to this section and therefore is omitted.

Sample holding times (Table 8.9.18 and Table 8.9.19) are consistent with those described in US EPA (1974), American Public Health Association (APHA, 2005), Wood (1976), and ASTM Method D6517-00 (2005). After collection, samples will be placed in ice chests in the field and maintained thereafter at approximately 4 degrees Celsius (°C) until analysis. The samples will be maintained at their preservation temperature and sent to the designated laboratory within 24 hours. Analysis of the samples will be completed within the holding time listed in (Table 8.9.18 and Table 8.9.19). As appropriate, alternative sample containers and preservation techniques approved by the Program Director will be used to meet analytical requirements.

B.3.a. Maximum Hold Time/Time Before Retrieval

Refer to Table 8.9.18 and Table 8.9.19 for sample holding times.

B.3.b. Sample Transportation

Refer to Section B.3 Sample Handling and Custody for a description of sample transportation.

B.3.c. Sample Documentation

Field notes will be recorded on all [redacted] fluid sample collections. These notes will be retained and archived as reference. The sample documentation is the responsibility of fluid sampling personnel.

An analysis authorization form shall be provided with each CO_2 gas stream sample provided for analysis as shown by the example in **Figure 8.9.4**.

B.3.d. Sample Identification

See Section B.3. Sample Handling and Custody for details related to Sample Identification.

F-Sk-10 (09/17)

CO_2 Analysis Authorization Form

Airborne Labs International

This form MUST be completed & returned with your sample shipment. Analytical testing cannot be performed unless this form is completed and returned.

1. REPORT RESULTS TO: **Please attach complete billing address if different from reporting address.*

COMPANY:				
ADDRESS:	Street Address	City	State & Zip Code	Country
CONTACT(S):				
EMAIL ADDRESS(ES):				
P.O. #:		**INVOICE # OR QUOTE #:**		
TELEPHONE:		**CREDIT CARD TYPE:**	Credit Card Type	
SAMPLED ON (MM/DD/YY):		**CC # / EXPIRATION DATE:**		

2. SAMPLE IDENTIFICATION:

INDICATE HOW YOUR SAMPLE SHOULD BE IDENTIFIED & ATTACH A LOG FOR MULTIPLE SAMPLES:								
# OF SAMPLES TAKEN:								
CONTAINER TYPES: *Please check all that apply*	GAS SAMPLING BAG(S)		MINICYL(S)		NVR CAN(S)		*IF OTHER, PLEASE DESCRIBE	
	HI PRESSURE CYLINDER		STD ALI NO-HAZ SAMPLING KIT		OTHER*			

3. SAMPLE DESCRIPTION:

FINAL PRODUCT		**IDENTIFY PHASE:**	VAPORIZED LIQUID CO_2		LIQUID CO_2		VAPOR OVER LIQUID		DRY ICE (SNOW)	
IN-PROCESS										
FEED GAS		**IDENTIFY SOURCE:**	FERMENTATION		COMBUSTION		SELF GEN		ETO	
			AMMONIA		NATURAL WELL		BIOGAS			
OTHER*		*IF OTHER, PLEASE DESCRIBE:								

4. PURITY GRADE TYPE:

Please check what type of purity grade is needed:	ISBT BEVERAGE		FEED GAS		INDUSTRIAL		*IF OTHER, PLEASE DESCRIBE
	FOOD		MEDICAL		OTHER*		

5. POTENTIAL HAZARDS:

Please specify any hazards:	STD CO_2 HANDLING PRECAUTIONS		OTHER PRECAUTIONS*		*IF OTHER, PLEASE DESCRIBE:

6. ANALYTICAL PROGRAM OR INDIVIDUAL TEST(S) REQUESTED:

Please check **one** desired *ALI* test program or select tests that are required (if applicable):	STANDARD CONTRACTUAL PGM		STANDARD FEED GAS PGM		FOUNTAIN STANDARD PGM	
	ISBT PROGRAM		ADVANCED FEED GAS PGM		FOUNTAIN CRITICAL PGM	
	ISBT PROGRAM WITH H2O		HARPC		GHG PGM	
	STANDARD COCA-COLA PGM		STD FOOD GRADE		MEDICAL GRADE	
	STANDARD PEPSI PGM		DRY ICE PGM		OTHER*	

***If OTHER -Please select ALL Individual Tests Required:** ☐ % CO_2 Purity ☐ Non-Condensable Gases = (H_2-N_2-Ar-O_2-CH_4-CO) ☐ Oxygen ☐ CO ☐ THC ☐ TNMHC ☐ IR Scan ☐ Vol Oxygenates (VOX) ☐ Chloride (VCl) ☐ Siloxanes ☐ Specific Gravity

☐ Benzene ☐ NH_3 ☐ HCN ☐ GC/MS Scan ☐ Heavy Metals ☐ Vol Halogenated Hydrocarbons ☐ Helium ☐ PH_3 ☐ NO_x ☐ NO ☐ NO_2 ☐ Microscopic Exam ☐ Density ☐ Acid Gases

☐ Total Sulfur ☐ H_2S ☐ SO_2 ☐ Acetaldehyde (AA) ☐ Vol Sulfurs ☐ Volatile Hydrocarbons (C_1-C_6+) ☐ BTEX ☐ VXH ☐ CH_4 ☐ COS ☐ Vinyl ☐ NVR/NVOR Oil ID ☐ Radon (Rn^{222}) ☐ Water Vapor

7. SAMPLE DISPOSITION: **Samples will be saved for 3 business days after report distribution unless otherwise noted.*

Please indicate what you'd like *ALI* to do with your sample after testing.	DISPOSE		RETAIN FOR SPECIFIED TIME PERIOD**		**PLEASE INDICATE TIME PERIOD:
	CLEAN & RETURN CUSTOMER OWNED KIT		OTHER***		*** PLEASE SPECIFY:
	RETURN REMAINING SAMPLE*		*IF **TO ADDRESS & ANY SPECIFIC INSTRUCTIONS:		

8. SERVICE DESIRED: **Additional fees will apply for non-standard test scheduling. You MUST contact ALI to confirm any expedited service request. By checking below, you agree that respective fees listed will be applied to the total cost of your program.*

Please indicate how quickly you would like your test results reported.	3-5 WORKDAYS (STANDARD)		SAME DAY* (AM- 325% PM-375%)		*IF OTHER, PLEASE SPECIFY:
	2 WORKDAYS* (225%)		EMERGENCY / OTHER: WEEKEND*(400%) / HOLIDAY* (600%)		
	1 WORKDAY* (275%)				

Figure 8.9.4—Example of CO_2 gas stream analysis authorization form[3].

B.3.e. Sample Chain-of-Custody

An analysis authorization form for CO_2 stream analyses will accompany the samples to the lab at which point a chain-of-custody accompanies the sample through their processes.

Four Corners Carbon will provide the program administrator with a sample chain-of-custody once the third-party contractor is selected. An example chain-of-custody form is provided in **Figure 8.9.5**. Copies of the form will be provided to the person/lab receiving the samples as well as the person/lab transferring the samples. These forms will be retained and archived to allow simplified tracking of sample status. The chain-of-custody form and record keeping is the responsibility of fluid sampling personnel.

[3] www.airbornelabs.com/images/editor/files/co2-analysis-authorization-form.pdf

Chain of Custody Record					
Project No.			**Project Title**		**Organization**
Shipping Container No.					**Contact**
Field Samplers:	*print*		*signature*		**Address**
Date	**Time**	**Site/Location**	**Sample Type**	**Sample ID**	**Remarks**
Relinquished by (*print and signature*):			Received by (*print and signature*):		**Comments**

Figure 8.2 Example Field COC Form.

Chain of Custody Record					
Project No.			**Project Title**		**Organization**
Laboratory/Plant:					
Sample Number	Number of Container	Sample Description			
Person responsible for samples			Time:		Date:
Sample Number	Relinquished By:	Received By:	Time:	Date:	Reason for change in custody

Figure 8.9.5—Example chain of custody form[4].

B.4. Analytical Methods

Logging, geophysical monitoring, and pressure/temperature monitoring does not apply to this section and, therefore, is omitted.

[4] https://www3.epa.gov/ttnamti1/files/ambient/pm25/qa/vol2sec08.pdf

B.4.a. Analytical Standard Operational Procedures (SOP)

See Table 8.9.4 and

Table 8.9.5 for details on Analytical SOPs. The selected laboratory will use standard EPA laboratory analytical methods to quantify the concentration of anions, cations, dissolved CO_2, total dissolved solids (TDS), water density, alkalinity, pH, specific conductive, and temperature. Laboratory QC procedures are inherent to the analysis methodology. The laboratory is responsible for documenting and maintaining compliance with these measures in accordance with industry standards and state licensing. If other water quality objectives are required, Four Corners Carbon will coordinate with the designated analytical laboratory prior to the sample event to evaluate the appropriate laboratory procedures and sample equipment necessary to fulfill the Project objectives.

B.4.b. Equipment/Instrumentation Needed

Equipment and instrumentation is specified in the individual analytical methods referenced in Table 8.9.4 and

Table 8.9.5.

B.4.c. Method Performance Criteria

Non-standard method performance criteria are not anticipated for this Project.

B.4.d. Analytical Failure

Each laboratory conducting analyses in Table 8.9.4 and

Table 8.9.5 will be responsible for appropriately addressing analytical failure according to their individual SOPs.

B.4.e. Sample Disposal

Each laboratory conducting analyses will be responsible for appropriate sample disposal according to their individual SOPs.

B.4.f. Laboratory Turnaround

Four Corners Carbon will request analytics turn-around times to meet all permitted reporting requirements with the understanding that laboratory turnaround will vary by laboratory, but generally turnaround of verified analytical results within 1 month will be suitable for Project needs.

B.4.g. Method Validation for Non-Standard Methods

Non-standard methods are not anticipated for this Project. Should non-standard methods be required or proposed in the future, the injection program administrator will be consulted on additional appropriate actions to be taken.

B.5. Quality Control

B.5.a. Quality Control Activities

B.5.a.i. Blanks

For [redacted] fluid sampling, a field blank will be collected and analyzed for the inorganic analytes in Table 8.9.4 and

Table 8.9.5 at a frequency of 10% or greater. Field blanks will be exposed to the same field and transport conditions as the groundwater samples. The field blanks will be utilized for deep groundwater sampling and analyzed for the inorganic analytes at a frequency of 10% or greater in Table 8.9.4 and

Table 8.9.5. Field blanks will be used to detect contamination resulting from the collection and transportation process.

B.5.a.ii. Duplicates

Duplicate [redacted] fluid samples will be collected in separate containers from the Injector 1 well and processed separately. Duplicate samples will be used to assess sample heterogeneity and analytical precision.

B.5.b. Exceeding Control Limits

If the sample analytical results exceed control limits (i.e., ion balances > ±10%), further examination of the analytical results will be achieved by evaluating the ratio of the measured TDS to the calculated TDS (i.e., mass balance) per APHA. The method indicates which ion analyses should be considered suspect based on the mass balance ratio. Suspect ion analyses will be reviewed in the context of historical data and interlaboratory results, if available. Suspect ion analyses will be brought to the attention of the analytical laboratory for confirmation and/or reanalysis. The ion balance will be recalculated, and if the error is still not resolved, suspect data are identified and may be given less importance in data interpretations.

B.5.c. Calculating Applicable Quality Control Statistics

B.5.c.i. Charge Balance

The analytical results will be evaluated to determine correctness of analyses based on anion-cation charge balance calculation. Because all potable waters are electrically neutral, the chemical analyses should yield equally negative and positive ionic activity. The anion-cation charge balance will be calculated using the formula in **Equation 8.9.1**:

Equation 8.9.1—Formula for anion-cation charge balance.

$$\%\ difference = 100 \frac{\Sigma\ cations - \Sigma\ anions}{\Sigma\ cations + \Sigma\ anions}$$

Where the sums of the ions are represented in milliequivalents (meq) per liter and the criteria for acceptable charge balance is ±10%.

B.5.c.ii. Mass Balance

The ratio of the measured TDS to the calculated TDS will be calculated in instances where the charge balance acceptance criteria are exceeded using the formula shown in **Equation 8.9.2**:

Equation 8.9.2—Ratio of measured vs. calculated TDS.

$$1.0 < \frac{measured\ TDS}{calculated\ TDS} < 1.2$$

where the anticipated values are between 1.0 and 1.2.

B.5.c.iii. Outliers

It is essential to determine statistical outliers prior to the statistical evaluation of fluid samples. Four Corners Carbon will use the EPA's Unified Guidance (March 2009) as a basis for selection of recommended statistical methods to identify outliers in fluid chemistry data sets as appropriate. These techniques include Probability Plots, Box Plots, Dixon's test, and Rosner's test. The EPA-1989 outlier test may also be used as another screening tool to identify potential outliers.

B.6. Instrument/Equipment Testing, Inspection, and Maintenance

Logging tool equipment will be maintained as per wireline industry best practices ([redacted]). For fluid sampling, field equipment will be maintained, factory serviced, and factory calibrated per manufacturer's recommendations. Spare parts that may be needed during sampling will be included in supplies on-hand during field sampling. For all laboratory equipment, testing, inspection, and maintenance will be the responsibility of the analytical laboratory per standard practice, method-specific protocol, or NELAP requirement.

B.7. Instrument/Equipment Calibration and Frequency

B.7.a. Calibration and Frequency of Calibration

Pressure/temperature gauge calibration information is located in Table 8.9.9 through Table 8.9.15.

Logging tool calibration will be at the discretion of the service company providing the equipment, following standard industry practices noted in APPENDICES B. Calibration frequency will be determined by standard industry practices.

For fluid sampling, sondes used to determine field parameters (e.g., pH, temperature, specific conductance, dissolved oxygen) are calibrated according to manufacturer recommendations and equipment manuals (Hach 2006) each day before sample collection begins. Recalibration is performed if any components yield atypical values or fail to stabilize during sampling.

B.7.b. Calibration Methodology

Logging tool calibration methodology will follow standard industry practices in Appendix B.

For fluid sampling, standards used for calibration are typically 7 and 10 for pH, a potassium chloride solution yielding a value of 1,413 microseimens per centimeter (µS/cm) at 25°C for specific conductance, and a 100% dissolved oxygen (DO) solution for DO. Calibration is performed for the pH meters per manufacturer's specifications using a 2-point calibration bounding the range of the sample. For

coulometry, sodium carbonate standards (typically yielding a concentration of 4,000 mg CO_2/L) are routinely analyzed to evaluate instrument.

B.7.c. Calibration Resolution and Documentation

Logging tool calibration resolution and documentation will follow standard industry practices in Appendix B.

B.8. Inspection/Acceptance for Supplies and Consumables

B.8.a. Supplies, Consumables, and Responsibilities

Supplies and consumables for field and laboratory operations will be procured, inspected, and accepted as required from vendors approved by Four Corners Carbon or the respective subcontractor responsible for the data collection activity. Acquisition of supplies and consumables related to groundwater analyses will be the responsibility of the laboratory per established standard methodology or operating procedures.

B.9. Non-Direct Measurements

B.9.a. Data Sources

Pulsed neutron logging for CO_2 saturation monitoring of the [redacted] injection zone, [redacted] confining zone, and [redacted], the first permeable interval above the upper confining zone, and all other relevant zones.

The in-zone pressure gauges in Injector 1 and Monitor 1 will be used to gather pressure data for in-zone pressure monitoring.

B.9.b. Relevance to Project

[redacted] will be run to detection of CO_2 leaking from the injection zone.

In-zone pressure monitoring, data will be used in numerical modeling to predict plume and pressure front behavior as well as confirm the plume stage within the AoR.

B.9.c. Acceptance Criteria

Following standard industry practices will ensure that the gathered pulsed neutron log data will be used for accurate monitoring.

B.9.d. Resources/Facilities Needed

Under review by selected third-party contractor and laboratory within ASTM recommended guidelines.

B.9.e. Validity Limits and Operating Conditions

Under review by selected third-party contractor and laboratory within ASTM recommended guidelines.

B.10. Data Management

B.10.a. Data Management Scheme

Four Corners Carbon will maintain the required Project data as provided elsewhere in the permit. Data will be backed up on hard drive media or held on secure servers.

B.10.b. Record-Keeping and Tracking Practices

All records and gathered data will be securely held and properly labeled for auditing purposes.

B.10.c. Data Handling Equipment/Procedures

All infrastructure used to store data will be properly maintained and operated according to proper industry standard techniques. The Four Corners Carbon SCADA-like system and vendor data acquisition systems will interface; therefore, all subsequent data will be stored on a secure server.

B.10.d. Responsibility

The primary Project managers will be responsible for ensuring proper data management is maintained.

B.10.e. Data Archival and Retrieval

Under review—all data will be held by Four Corners Carbon.

B.10.f. Hardware and Software Configurations

All Four Corners Carbon and vendor hardware and software configurations will be appropriately interfaced.

B.10.g. Checklists and Forms

Checklists and forms will be procured and generated as necessary.

C. ASSESSMENT AND OVERSIGHT

C.1. Assessments and Response Actions

C.1.a. Activities to be Conducted

Please refer to Table 8.9.1 for a work summary and schedule and frequency of [redacted] fluid sample collections. After completion of sample analysis, results will be reviewed for QC criteria as noted in Section B.5. Quality Control. If the data quality fails to meet criteria set in section B.5. Quality Control, samples will be reanalyzed, if still within holding time criteria. If the holding time has passed, additional samples may be collected or sample results may be excluded from data evaluations and interpretations. Evaluation for data consistency will be performed according to procedures described in the USEPA 2009 Unified Guidance (USEPA 2009).

C.1.b. Responsibility for Conducting Assessments

Companies collecting data are in charge of conducting their own internal reviews.

C.1.c. Assessment Reporting

All assessment information should be reported to the individual organizations project manager outlined in Section A.1.a Key Individuals and Responsibilities.

C.1.d. Corrective Action

Corrective action that only effects an individual organization's data collection duty will be addressed, verified, and documented within the organization and communicated to other stake holders as necessary.

Corrective actions that involve multiple organizations will be addressed by all stakeholders involved and communicated to other members on the distribution list for the QASP. Four Corners Carbon will coordinate all corrective actions and assessments that involve multiple organizations.

C.2. Reports to Management

C.2.a. QA Status Reports

Four Corners Carbon does not plan to send QA status reports.

D. DATA VALIDATION AND USABILITY

D.1. Data Review, Verification, and Validation

D.1.a. Criteria for Accepting, Rejecting, or Qualifying Data

[redacted] water quality data validation will include a review of the sample collection process, sample units, sample holding times, and a comparison and review of the appropriate duplicate, or blank QC/QA results. Results will be catalogued and periodically reviewed and compared to previous data. Analytical results will be reported on a frequency based on the approved UIC permit conditions. Data in these reports will be presented in a variety of formats as appropriate to characterize water quality and identify any changes with time.

D.2. Verification and Validation Methods

D.2.a. Data Verification and Validation Processes

See Sections D.1.a and B.5 for information related to Four Corners data verification and validation process.

D.2.b. Data Verification and Validation Responsibility

Four Corners Carbon or a contractor approved by Four Corners Carbon will verify and validate [redacted] fluid data.

D.2.c. Issue Resolution Process and Responsibility

Four Corners Carbon or a project manager approved by Four Corners Carbon will oversee the data review process and take the appropriate actions to resolve any issues that may arise.

D.2.d. Checklist, Forms, and Calculations

Four Corners Carbon will generate checklists, forms and calculations designed to meet all permit requirements.

D.3. Reconciliation with User Requirements

D.3.a. Evaluation of Data Uncertainty

Software will be employed to determine data consistency.

D.3.b. Data Limitations Reporting

Four Corners Carbon or project managers approved by Four Corners Carbon will be responsible for making sure that all reported data is presented with the appropriate data-use limitations.

REFERENCES

American Public Health Association (APHA). 2005, Standard methods for the examination of water and wastewater. 21st edition. American Public Health Association, Washington, DC.

American Society for Testing and Materials (ASTM). Method B D513-Standard Test Methods for Total and Dissolved Carbon Dioxide in Water

American Society for Testing and Materials (ASTM). Standards G1 and G4

American Society for Testing and Materials (ASTM). 2005. Method D6517-00 (reapproved 2005). Standard guide for field preservation of groundwater sample. ASTM International, 100 Barr Harbor Drive, West Conshohocken, PA.

Archer Daniels Midland Company (ADM). 2016. Illinois Industrial Carbon Capture and Sequestration (IL-ICCS) Project Class VI Injection Well: Quality Assurance and Surveillance Plan, U.S. Environmental Protection Agency (IL-115-6A-0001).

Hach Company. 2006, Hydrolab DS5X, DS5, and MS5 Water Quality Multiprobes User Manual. February 2006. Hach Company, 73 p.

National Association of Corrosion Engineers (NACE) RP-0775

U.S. Environmental Protection Agency (US EPA). 2009. Statistical analysis of groundwater monitoring data at RCRA facilities—Unified Guidance. US EPA, Office of Solid Waste, Washington, DC.

U.S. Environmental Protection Agency (US EPA). 1974. Methods for chemical analysis of water and wastes. US EPA Cincinnati, OH, EPA-625-/6-74-003a.

Wood, W.W.,1976. Guidelines for collection and field analysis of groundwater samples for selected unstable constituents. In U.S. Geological Survey, Techniques for Water Resources Investigations, Chapter D-2, 24 p.

APPENDICES

[redacted]

[redacted]

[redacted]

Cement Bond Logging Tools

[redacted]

Cement Bond Logging Tools

[redacted]

Cement Bond Logging Tools

[redacted]

Cement Bond Logging Tools

[redacted]

www.slb.com/oilfield

Schlumberger

09-CE-005 March 2007
*Mark of Schlumberger
Copyright © 2007 Schlumberger. All rights reserved.

[redacted]

[redacted] downhole pressure gauge system

[redacted]

[redacted] downhole pressure gauge system continued

[redacted]

APPENDIX B—Schlumberger Wireline Log Quality Control Reference Manual

Schlumberger

Wireline Log Quality Control Reference Manual

Schlumberger

Logging Quality Control Reference Manual

Back | Next

Schlumberger
225 Schlumberger Drive
Sugar Land, Texas 77478

www.slb.com

Produced by Schlumberger Oilfield Marketing Communications

Copyright © 2011 Schlumberger. All rights reserved.

No part of this book may be reproduced, stored in a retrieval system, or transcribed in any form or by any means, electronic or mechanical, including photocopying and recording, without the prior written permission of the publisher. While the information presented herein is believed to be accurate, it is provided "as is" without express or implied warranty.

11-FE-0065

An asterisk (*) is used throughout this document to denote a mark of Schlumberger. Other company, product, and service names are the properties of their respective owners.

Back | Next

Schlumberger

Contents

Foreword 1
Introduction 2
Depth Control and Measurement 5

Logging Platforms and Suites 13
Platform Express* integrated wireline logging tool 13
PS Platform* production services platform 23

Resistivity Logging 24
Rt Scanner* triaxial induction service 24
AIT* array induction imager tool 33
ARI* azimuthal resistivity imager 39
HRLA* high-resolution laterolog array 42
High-Resolution Azimuthal Laterolog Sonde 47
MicroSFL* spherically focused resistivity tool 52
Microlog tool 54
CHFR-Plus* and CHFR Slim* cased hole formation resistivity tools 56
EPT* electromagnetic propagation tool 59

Nuclear Measurements 62
Gamma ray tools 62
NGS* natural gamma ray spectrometry tool 64
Hostile Environment Natural Gamma Ray Sonde 66
ECS* elemental capture spectroscopy sonde 69
CNL* compensated neutron log 76
APS* accelerator porosity sonde 79
RST* and RSTPro* reservoir saturation tools 82
Litho-Density* photoelectric density log 87
Litho-Density sonde 89
HLDT* hostile environment Litho-Density tool 92
SlimXtreme* LithoDensity tool 95

Nuclear Magnetic Resonance Logging 98
MR Scanner* expert magnetic resonance service 98
CMR-Plus* combinable magnetic resonance tool 102

Acoustic Logging 107
Sonic Scanner* acoustic scanning platform 107
Borehole-Compensated Sonic 112
Sonic Long Spacing 116
DSI* dipole shear sonic imager 119

Back | Next

Schlumberger

Digital Entry and Fluid Imager Tool 241
GHOST* gas holdup optical sensor tool 242
RST and RSTPro reservoir saturation tools 244
WFL* water flow log 249
TPHL* three-phase fluid production log 251
CPLT* combinable production logging tool 253

Perforating Services and Accessories 258
Perforating depth control 258

Plugs and Packers 260
PosiSet* mechanical plugback tool 260

Auxiliary Measurements and Devices 262
Borehole geometry log 262
Powered Positioning Device and Caliper 264
Auxiliary Measurement Sonde 266
Environmental Measurement Sonde 268
FPIT* free-point indicator tool 270
TDT* thermal decay time 272

Schlumberger

Foreword

The certification of acquired data is an important aspect of logging. It is performed through the observation of quality indicators and can be completed successfully only when a set of specified requirements is available to the log users.

This Log Quality Control Reference Manual (LQCRM) is the third edition of the log quality control specifications used by Schlumberger. It concisely provides information for the acquisition of high-quality data at the wellsite and its delivery within defined standards. The LQCRM is distributed to facilitate the validation of Schlumberger wireline logs at the wellsite or in the office.

Because the measurements are performed downhole in an environment that cannot be exhaustively described, Schlumberger cannot and does not warrant the accuracy, correctness, or completeness of log data.

Large variations in well conditions require flexibility in logging procedures. In some cases, important deviations from the guidelines given here may occur. These deviations may not affect the validity of the data collected, but they could reduce the ability to check that validity.

Catherine MacGregor
President, Wireline

Schlumberger

Introduction

Data is a permanent asset of energy companies that may be used in unforeseen ways. Schlumberger is committed to and accountable for managing and delivering quality data. The quality of the data is the cornerstone of Schlumberger products and services.

Data quality

Quality is conformance to predefined standards with minimum variation. This document defines the standards by which the quality of the data of Schlumberger wireline logs is determined. The attributes that form the data quality model are

- accuracy
- repeatability
- integrity
- traceability
- timeliness
- relevance
- completeness
- sufficiency
- interpretability
- reputation
- objectivity
- clarity
- availability
- accessibility
- security.

Accuracy

Accuracy is how close to the true value the data is within a specified degree of conformity (e.g., metrology and integrity). Accuracy is a function of the sensor design; the measurement cannot be made more accurate by varying operating techniques, but it can fail to conform to the defined accuracy as a result of several errors (e.g., incorrect calibration).

Repeatability

Repeatability of data is the consistency of two or more data products acquired or processed using the same system under the same conditions. Reproducibility, on the other hand, is the data consistency of two or more data products acquired or processed using different systems or under different conditions. The majority of wireline measurements have a defined repeatability range, which is applicable only when the measurement is conducted under the same conditions. Repeatability is used to validate the measurement acquired during the main logging pass, as well as identify anomalies that may arise during the survey for relogging.

Integrity

The integrity of data is essential for the believability of data. Data with integrity is not altered or tampered with. There are situations in which data is altered in a perfectly acceptable manner (e.g., applying environmental corrections, using processing parameters for interpretation). Any such changes, which involve an element of judgment, are not done to intentionally produce results inconsistent with the measurements or processed data and are to the best and unbiased judgment of the interpreter. Results of interpretation activities are auditable, clearly marked, and traceable.

Traceability

Traceability of data refers to having a complete chain defining a measurement from its point of origin (sensor) to its final destination (formation property). At each step of the chain, appropriate measurement standards are respected, well documented, and auditable.

Timeliness

Timeliness is the availability of the data at the time required. Timeliness ensures that all tasks in the process of acquiring data are conducted within the time window defined for such tasks (e.g., wellsite calibrations and checks are done within the time window defined).

Relevance

Relevance is the applicability and helpfulness of the acquired dataset within the business context (e.g., selection of the right service for the well conditions). Most services have a defined operating envelope in which the measurement is considered valid. Measurements conducted outside their defined envelope, although the measurement process may have been completed satisfactorily, are almost always irrelevant (e.g., recording an SP curve in an oil-base mud environment).

Completeness

Completeness ensures that the data is of sufficient breadth, depth, and scope to meet predefined requirements. This primarily means that all required measurements are available over the required logging interval, with no missing curves or gaps in curves over predefined required intervals of the log.

Sufficiency

Sufficiency ensures that the amount of data that is acquired or processed meets the defined objectives of the operation. For example, when the defined objective is to compute the hole volume of an oval hole, a four-arm caliper service—at minimum—must be used. Using a single-arm caliper service would not provide sufficient information to achieve the defined objective and would inadvertently result in overestimation of the hole volume.

Interpretability

Interpretability of data requires that the measurement is specified in appropriate terminology and units and that the data definitions are clear and documented. This is essential to ensure the capability of using the data over time (i.e., reusability).

Reputation

Reputation refers to data being trusted or highly regarded in terms of its source, content, and traceability.

Objectivity

The objectivity of data is an essential attribute of its quality, unbiased and impartial, both at acquisition and at reuse.

Clarity

Clarity refers to the availability of a clear, unique definition of the data by using a controlled data dictionary that is shared. For example, when "NPHI" is referred to, it must be understood by all that NPHI is the thermal neutron porosity in porosity units (m^3/m^3 or ft^3/ft^3), computed from a thermal neutron ratio that is calibrated using a single-point calibration mechanism (gain only), and is the ratio of counts from a near and a far receiver, with the counts corrected only for hole size and not corrected for detector dead time.

Clarity ensures objectivity and interpretability over time.

Availability

Availability of data ensures the distribution of data only to the intended parties at the requested time (i.e., no data is disclosed to any other party than the owner of the data without prior written permission).

Accessibility

Accessibility ensures the ease of retrievability of data using a classification model. Wireline data are classified into three datasets:

- Basic dataset is a limited dataset suitable for quicklook interpretation and transmission of data.
- Customer dataset consists of a complete set of data suitable for processing (measurements with their associated calibrations), recomputing (raw curves), and validating (log quality control [LQC] curves) the measurements of the final product delivered. The customer dataset includes all measurements required to fully reproduce the data product with a complete and auditable traceability chain.
- Producer dataset includes Schlumberger-proprietary data, which are meaningful only to the engineering group that supports the tool in question (e.g., the 15th status bit of ADC015 on board EDCIB023 in an assembly).

Security

The security of data is essential to maintain its confidentiality and ensure that data files are clean of malware or viruses.

Calibration theory

The calibration of sensors is an integral part of metrology, the science of measurement. For most measurements, one of the following types of calibrations is employed:

- single-point calibration
- two-point calibration
- multiple-point calibration.

Because most measurements operate in a region of linear response, any two points on the response line can be compared with their associated calibration references to determine a gain and an offset (two-point calibration) or a gain (single-point calibration). The gain and offset values are used in the calibration value equation, which converts any measured value to its associated calibrated value.

There are three events that measurements may have one or more of:

- Master calibration: Performed at the shop on a quarterly or monthly basis, a master calibration usually comprises a primary measurement done to a measurement standard and a reference measurement that serves as a baseline for future checks. The primary measurement is the calibration of the sensor used for converting a raw measurement into its final output.
- Wellsite before-survey calibration or check: Measurements that have a master calibration are normally not calibrated at the wellsite; rather, the reference measurement conducted in the master calibration is repeated at the wellsite before conducting the survey to ensure that the tool response has not changed. Measurements that do not have a master calibration may employ a wellsite calibration that is conducted prior to starting the survey.
- Wellsite after-survey check: Some measurements employ an after-survey check (optional for most measurements) to ensure that the tool response has not changed from before the survey.

All such events are recorded in a calibration summary listing (CSL) (Fig. 1).

The calibration summary listing contains an auditable trail of the event:

- equipment with serial numbers
- actual measurement and the associated range (minimum, nominal, and maximum)
- time the event was conducted.

For the event to be valid, the measurement must fall within the defined minimum and maximum limits, using the same equipment (verified through the mnemonics and serial numbers), and performed on time (verified through the time stamp on the summary listing).

More details on the calibrations associated with the wide range of Schlumberger wireline measurements are in the *Logging Calibration Guide*, which is available through your local Schlumberger representative.

Hostile Natural Gamma Ray Sonde / Equipment Identification

Primary Equipment:	
HNGS Sonde	HNGS - BA
Auxiliary Equipment:	
HNGS Sonde Housing	HNSH - BA
Gamma Source Radioactive	GSR - U

Hostile Natural Gamma Ray Sonde Master Calibration
Detector 1 Calibration

Phase	Na 511 Peak Set Point	Value	Phase	Th Peak Loc	Value	Phase	Th Peak Res %	Value
Master		42.00	Master		211.9	Master		7.396
38.00 (Minimum)	40.00 (Nominal)	42.00 (Maximum)	201.0 (Minimum)	209.6 (Nominal)	218.3 (Maximum)	5.000 (Minimum)	7.000 (Nominal)	9.000 (Maximum)
Phase	Background Count Rate CPS	Value	Phase	Gain Ratio	Value			
Master		96.67	Master		0.9836			
20.00 (Minimum)	142.5 (Nominal)	265.0 (Maximum)	0.9400 (Minimum)	1.000 (Nominal)	1.060 (Maximum)			

Master:

Hostile Natural Gamma Ray Sonde Master Calibration
Detector 2 Calibration

Phase	Na 511 Peak Set Point	Value	Phase	Th Peak Loc	Value	Phase	Th Peak Res %	Value
Master		41.00	Master		211.1	Master		6.985
38.00 (Minimum)	40.00 (Nominal)	42.00 (Maximum)	201.0 (Minimum)	209.6 (Nominal)	218.3 (Maximum)	5.000 (Minimum)	7.000 (Nominal)	9.000 (Maximum)
Phase	Background Count Rate CPS	Value	Phase	Gain Ratio	Value			
Master		96.01	Master		1.017			
20.00 (Minimum)	142.5 (Nominal)	265.0 (Maximum)	0.9400 (Minimum)	1.000 (Nominal)	1.060 (Maximum)			

Master:

Figure 1. Example of a master calibration.

*Mark of Schlumberger
Copyright © 2009 Schlumberger. All rights reserved. 09-FE-0167

Schlumberger

Depth Control and Measurement

Overview

Depth is the most fundamental wireline measurement made; therefore, it is the most important logging parameter. Because all wireline measurements are referenced to depth, it is absolutely critical that depth is measured in a systematic way, with an auditable record to ensure traceability.

Schlumberger provides through its wireline services an absolute depth measurement and techniques to apply environmental corrections to the measurement that meet industry requirements for subsurface marker referencing.

The conveyance of tools and equipment by means of a cable enables the determination of an absolute wellbore depth under reasonable hole conditions through the strict application of wellsite procedures and the implementation of systematic maintenance and calibration programs for measurement devices. The essentials of the wireline depth measurement are the following:

- Depth is measured from a fixed datum, termed the depth reference point, which is specified by the client.
- The Integrated Depth Wheel (IDW) device (Fig. 1) provides the primary depth measurement, with the down log taken as the correct depth reference.
- Slippage in the IDW wheels is detected and automatically compensated for by the surface acquisition system.
- The change in elastic stretch of the cable resulting from changing direction at the bottom log interval is measured and applied to the log depth as a delta-stretch correction.
- Other physical effects on the cable in the borehole, including changes in length owing to wellbore profile, temperature, and other hole conditions, are not measured but can be corrected for after logging is complete.
- Subsequent logs that do not require a primary depth measurement are correlated to a reference log specified by the client, provided that enough information exists to validate the correctness of the depth measured on previous logs.
- Traceability of the corrections applied should be such that recovery of absolute depth measurements is possible after logging, if required.

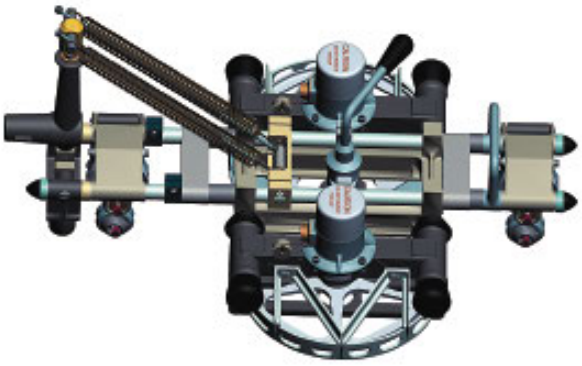

Figure 1. Integrated Depth Wheel device.

By strict application of this procedure, Schlumberger endeavors to deliver depth measurement with an accuracy of ±5 ft per 10,000 ft and repeatability of ±2 ft per 10,000 ft [±1.5 m and ±0.6 m per 3,050 m, respectively] in vertical wells.

Specifications

Measurement Specifications	
Accuracy	±5 ft per 10,000 ft [±1.5 m per 3,050 m]
Repeatability	±2 ft per 10,000 ft [±0.6 m per 3,050 m]

Calibration

The IDW calibration must be performed every 6 months, after 50 wellsite trips, or after 500,000 ft [152,400 m] have passed over the wheel, whichever comes first. The IDW device is calibrated with a setup that is factory-calibrated with a laser system, which provides traceability to international length standards.

Tension devices are calibrated every 6 months for each specific cable by using a load cell.

For more information, refer to the *Logging Calibration Guide*, which is available through your local Schlumberger representative.

Schlumberger

Depth Control and Measurement

Overview

Depth is the most fundamental wireline measurement made; therefore, it is the most important logging parameter. Because all wireline measurements are referenced to depth, it is absolutely critical that depth is measured in a systematic way, with an auditable record to ensure traceability.

Schlumberger provides through its wireline services an absolute depth measurement and techniques to apply environmental corrections to the measurement that meet industry requirements for subsurface marker referencing.

The conveyance of tools and equipment by means of a cable enables the determination of an absolute wellbore depth under reasonable hole conditions through the strict application of wellsite procedures and the implementation of systematic maintenance and calibration programs for measurement devices. The essentials of the wireline depth measurement are the following:

- Depth is measured from a fixed datum, termed the depth reference point, which is specified by the client.
- The Integrated Depth Wheel (IDW) device (Fig. 1) provides the primary depth measurement, with the down log taken as the correct depth reference.
- Slippage in the IDW wheels is detected and automatically compensated for by the surface acquisition system.
- The change in elastic stretch of the cable resulting from changing direction at the bottom log interval is measured and applied to the log depth as a delta-stretch correction.
- Other physical effects on the cable in the borehole, including changes in length owing to wellbore profile, temperature, and other hole conditions, are not measured but can be corrected for after logging is complete.
- Subsequent logs that do not require a primary depth measurement are correlated to a reference log specified by the client, provided that enough information exists to validate the correctness of the depth measured on previous logs.
- Traceability of the corrections applied should be such that recovery of absolute depth measurements is possible after logging, if required.

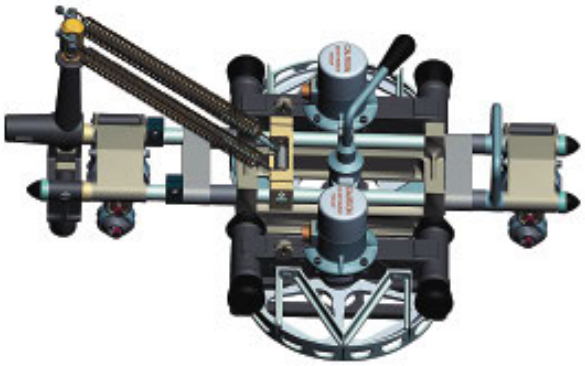

Figure 1. Integrated Depth Wheel device.

By strict application of this procedure, Schlumberger endeavors to deliver depth measurement with an accuracy of ±5 ft per 10,000 ft and repeatability of ±2 ft per 10,000 ft [±1.5 m and ±0.6 m per 3,050 m, respectively] in vertical wells.

Specifications

Measurement Specifications	
Accuracy	±5 ft per 10,000 ft [±1.5 m per 3,050 m]
Repeatability	±2 ft per 10,000 ft [±0.6 m per 3,050 m]

Calibration

The IDW calibration must be performed every 6 months, after 50 wellsite trips, or after 500,000 ft [152,400 m] have passed over the wheel, whichever comes first. The IDW device is calibrated with a setup that is factory-calibrated with a laser system, which provides traceability to international length standards.

Tension devices are calibrated every 6 months for each specific cable by using a load cell.

For more information, refer to the *Logging Calibration Guide*, which is available through your local Schlumberger representative.

The high-precision IDW device uses two wheels that measure cable motion at the wireline unit. Each wheel is equipped with an encoder, which generates an event for every 0.1 in [0.25 cm] of cable travel. A wheel correction is applied to obtain the ideal of one pulse per 0.1 in of cable travel.

Integration of the pulses results in the overall measured depth, which is the distance measured along the actual course of the borehole from the surface reference point to a point below the surface.

A tension device, commonly mounted on the cable near the IDW device, measures the line tension of the cable at the surface.

Depth control procedure

On arrival at the wellsite, the wireline crew obtains all available information concerning the well and the depth references (wellsite data) from the client's representative. Information related to the calibrations of the IDW device and the tension device is entered in the surface acquisition system.

First trip

First log

The procedure for the first log in a well consists of the following major steps:

1. Set up the depth system, and ensure that wheel corrections are properly set for each encoder.
2. Set tool zero (Fig. 2) with respect to the client's depth reference.
3. Measure the rig-up length (Fig. 3) between the IDW device and the rotary table at the surface. Investigate, and correct as necessary, any significant change in the rig-up length from that measured with the tool close to the surface.
4. Run in the hole with the toolstring.
5. Measure the rig-up length (Fig. 3) between the IDW device and the rotary table at bottom.
6. Correct for the change in elastic stretch resulting from the change in cable or tool friction when logging up.
7. Record the main log.
8. Record one or more repeat sections for repeatability analysis.†
9. Pull the toolstring out of the hole and check the depth on return to surface.

To set tool zero on a land rig, fixed platform, or jackup, the toolstring is lowered a few feet into the hole and then pulled up, stopping when the tool reference is at the client's depth reference point (Fig. 2).

Figure 2. Tool zero.

†Operational considerations may dictate a change in the order of Steps 6–8.

The following procedure for setting tool zero is used on floating vessels, semisubmersible rigs, and drillships equipped with a wave motion compensator (WMC):

1. With the WMC deactivated, stop the tool reference at the rotary table, and set the system depth to zero.
2. Lower the tool until the logging head is well below the riser slip joint, then flag the cable at the rotary table and record the current depth.
3. Have the driller pull up slowly on the elevators, until the WMC is stroking about its midpoint.
4. Raise or lower the tool until the cable flag is back at the rotary table.
5. Set the system depth to the depth recorded in Step 2.

Measuring the cable rig-up length ensures that the setup has not changed while running in the well (e.g., slack in the logging cable, movement of the logging unit, the blocks, or the sheaves). The following procedure is used to measure the rig-up length of the cable (Fig. 3):

1. Run in the hole about 100 ft [30 m], flag the cable at the IDW device, and note the depth.
2. Lower the toolstring until the flag is at the rotary table. Subtract the depth recorded in Step 1 from the current depth. The result is the rig-up length at surface (RULS).
3. Record RULS.

The speed used to proceed in the hole should avoid tool float (caused by excessive force owing to mud viscosity acting on the tool) or birdcaging of the cable. To the extent possible and operational considerations permitting, a constant speed should be maintained while running downhole. At the bottom of the hole, the measurement process is conducted to obtain the rig-up length at bottom (RULB), which is also recorded. If RULB differs from RULS by more than 1 ft [0.3 m], the rig-up has changed and the cause of the discrepancy must be investigated and eliminated or corrected for.

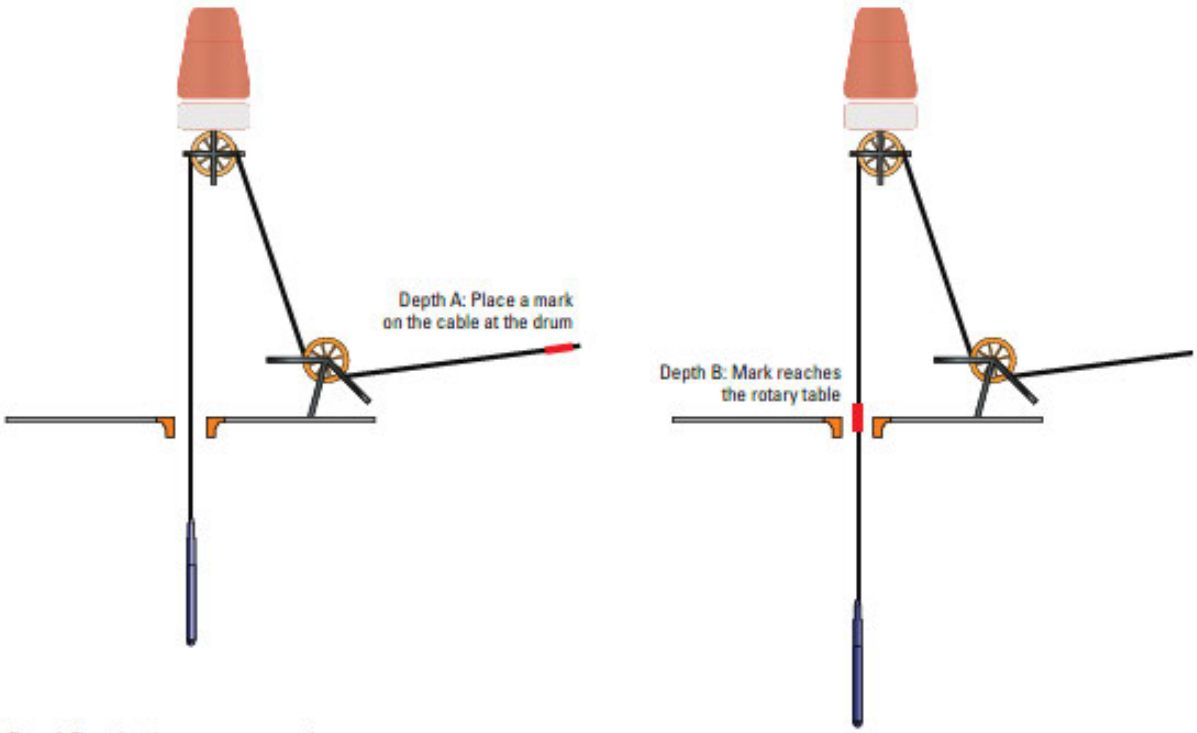

Figure 3. Rig-up length measurement procedure.

The rig-up length correction (RULC = RULS – RULB) is applied by adding RULC to the system depth. RULC is recorded in the Depth Summary Listing (Fig. 5).

To correct for the change of elastic stretch, the log-down/log-up method (Fig. 4) is applied as close as is reasonable to the bottom log interval:

1. Continue toward the bottom of the well at normal speed.
2. Log down a short section (minimum 200 ft [60 m]) close to the bottom, making sure to include distinctive formation characteristics for correlation purposes.
3. At the bottom, open calipers (if applicable) and log up a section overlapping the down log obtained in Step 2.
4. Using the down log as a reference, adjust the up-log depth to match the down log.
5. The adjustment is the stretch correction (SCORR) resulting from the change in tension. SCORR should be added to the hardware depth before logging the main pass.
6. Record SCORR and the depth at which it was determined in the Depth Summary Listing (Fig. 5).

If it is determined to be too risky to apply the delta-stretch correction before starting the log, the log can be recorded with no correction and then depth-shifted after the event with a playback. This procedure must be documented clearly in the Depth Summary Listing remarks. Such a procedure is justified when the well is excessively hot or sticky, and following the steps previously outlined could lead to a significant risk of tool problems or failure to return to bottom (and thus to loss of data).

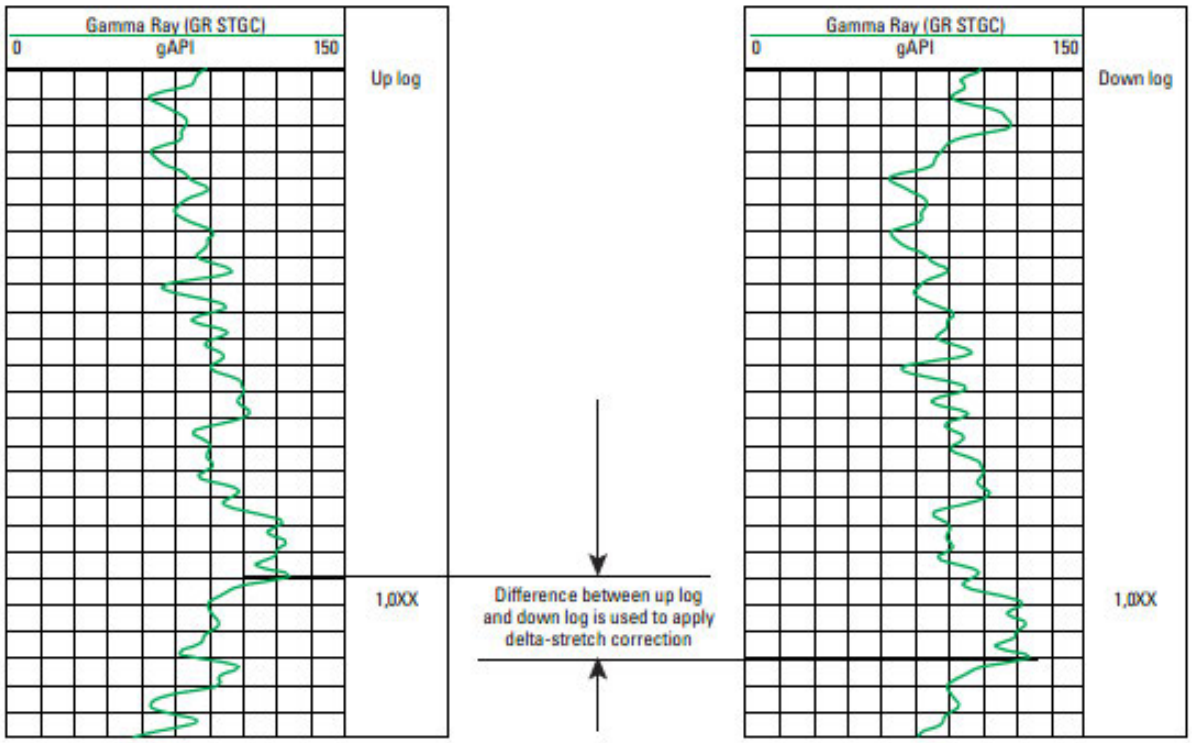

Figure 4. Stretch correction.

After pulling out of the hole, tool zero is checked at the surface, as was done before running in the hole, and the difference is recorded in the Depth Summary Listing (Fig. 5). In deviated wells in particular, environmental effects may lead to a re-zero error, with the depth system reading other than zero when the tool reference is positioned opposite the log reference point after return to the surface. Recording this difference is an essential step in controlling the quality of any depth correction computed after the log, because that depth correction process should include an estimate of the expected re-zero error.

All information related to the procedure followed for depth control should be recorded in the Depth Summary Listing (Fig. 5) for future reference.

DEPTH SUMMARY LISTING

Date Created: 10-Dec-20XX 12:09:15

Depth System Equipment

Depth Measuring Device		Tension Device		Logging Cable	
Type :	IDW-B	Type :	CMTD-B/A	Type :	7-46P
Serial Number:	4XX	Serial Number:	82XXX	Serial Number:	83XX
Calibration Date:	10-Dec-20XX	Calibration Date:	10-Dec-20XX	Length:	18750 FT
Calibrator Serial Number:	15XX	Calibrator Serial Number:	98XX	Conveyance Method:	Wireline
Calibration Cable Type:	7-46P	Number of Calibration Points:	10	Rig Type:	LAND
Wheel Correction 1:	-3	Calibration RMS:	11		
Wheel Correction 2:	-2	Calibration Peak Error:	15		

Depth Control Parameters

Log Sequence:	First Log in the Well
Rig Up Length At Surface:	352.00 FT
Rig Up Length At Bottom:	351.00 FT
Rig Up Length Correction:	1.00 FT
Stretch Correction:	5.00 FT
Tool Zero Check At Surface:	0.50 FT

Depth Control Remarks

1. Subsequent trip to the well. Downlog correlated to reference log XXX by YYY company dated DD-MM-YYYY.
2. Non-Schlumberger reference log. Full 1st trip to the well depth control procedure applied, which required the addition of XX ft to the down log.
3. Delta-stretch correction was conducted at 12XXX ft and applied to depth prior to recording the main log.
4. Z-chart used as a secondary depth check.

Figure 5. Depth Summary Listing for the first trip, first log in the well.

Subsequent logs

The depth of subsequent logs on the same trip is tied into the first log using the following procedure:

1. Properly zero the tool as for the first log.
2. The rig-up length does not need to be measured if the setup has not changed since the previous log.
3. Match depths with the first log by using a short up-log pass.
4. Run the main log and repeat passes as necessary.
5. Record the re-zero error in the Depth Summary Listing. This is part of the traceability that makes possible the determination of absolute depth after the event, if required.

Subsequent logs should be on depth with the first log over the complete interval logged. However, particularly when toolstrings of different weights are run in deviated wells, the relative depths of the logs can change over long logging intervals. Subsequent correction should enable removing all discrepancies.

The amount and sign of the correction applied and the depth at which it was determined must be recorded in the Depth Summary Listing. For any down log made, the delta-stretch correction should also be recorded, as well as the depth at which it was determined.

All information related to the procedure followed for depth control of subsequent logs of the first trip should be recorded in the Depth Summary Listing (Fig. 6).

DEPTH SUMMARY LISTING

Date Created: 10-Dec-20XX 14:38:50

Depth System Equipment

Depth Measuring Device		Tension Device		Logging Cable	
Type :	IDW-B	Type :	CMTD-B/A	Type :	7-46P
Serial Number:	4XX	Serial Number:	82XXX	Serial Number:	83XX
Calibration Date:	10-Dec-20XX	Calibration Date:	10-Dec-20XX	Length:	18750 FT
Calibrator Serial Number:	15XX	Calibrator Serial Number:	98XX	Conveyance Method:	Wireline
Calibration Cable Type:	7-46P	Number of Calibration Points:	10	Rig Type:	LAND
Wheel Correction 1:	-3	Calibration RMS:	11		
Wheel Correction 2:	-2	Calibration Peak Error:	15		

Depth Control Parameters

Log Sequence:	Subsequent trip In the Well
Reference Log Name:	AIT-GR
Reference Log Run Number:	1
Reference Log Date:	10-Dec-20XX

Depth Control Remarks

1. Subsequent log on 1st trip correlated to first log in the well from XX000 to XX200 ft
2. Speed correction not applied.
3. Z-chart used as a secondary depth check.
4. Correction applied to match reference log = XX ft, determined at depth XXX00 ft.
5. No rigup changes from previous log.

Figure 6. Depth Summary Listing for first trip, subsequent logs.

Subsequent trips

If there is not enough information in the Depth Summary Log from previous trips to ensure that correct depth control procedures have been applied, subsequent trips are treated as a first trip, first log in the well.

If sufficient information from previous trips was recorded to show that correct depth control procedures were applied, the previous logs can be used as a reference. The subsequent trips proceed as if running the initial trip with the following exceptions:

1. In conjunction with the client, decide which previous log to use as the downhole depth reference. Ensure that a valid copy of the reference log is available for correlation purposes. If the depth reference is a wireline log from a oilfield service provider other than Schlumberger, proceed as for the first log in the well, and investigate and document any discrepancies found with respect to the reference log.
2. Run in the hole and record a down log across an overlap section at the bottom of the reference log. If the overlap section is off by less than 5 ft per 10,000 ft, adjust the depth to match the current down log with the reference log. This adjustment ensures that the down section of the current log is using the same depth reference as the correlation log. Record any corrections made as the subsequent trip down log correction.
3. If the overlap log is off by more than 5 ft per 10,000 ft, investigate and resolve any problems. Record any depth discrepancies. Consult with the client to decide which log to use as the depth reference.
4. Run down to the bottom of the well at a reasonable speed so that the tool does not float.
5. Log main and repeat passes, correcting for stretch following the first trip procedure.
6. The logging pass should overlap with the reference log by at least 200 ft, if possible. The depth should match the reference log. Any discrepancies should be noted in the Depth Summary Listing or the log remarks.

All information related to the depth control procedure followed should be recorded in the Depth Summary Listing (Fig. 7).

DEPTH SUMMARY LISTING

Date Created: 10-Dec-20XX 14:26:56

Depth System Equipment

Depth Measuring Device		Tension Device		Logging Cable	
Type :	IDW-B	Type :	CMTD-B/A	Type :	7-46P
Serial Number:	4XX	Serial Number:	82XXX	Serial Number:	83XX
Calibration Date:	10-Dec-20XX	Calibration Date:	10-Dec-20XX	Length:	18750 FT
Calibrator Serial Number:	15XX	Calibrator Serial Number:	9851	Conveyance Method:	Wireline
Calibration Cable Type:	7-46P	Number of Calibration Points:	10	Rig Type:	LAND
Wheel Correction 1:	-3	Calibration RMS:	11		
Wheel Correction 2:	-2	Calibration Peak Error:	15		

Depth Control Parameters

Log Sequence:	Subsequent trip to the well
Reference Log Name:	AIT-GR
Reference Log Run Number:	1
Reference Log Date:	10-Dec-20XX
Subsequent Trip Down Log Correction:	1.00 FT

Depth Control Remarks

1. Subsequent trip to the well.
2. Down pass correlated to reference log within +/- 0.05%.
3. Correlation to reference log performed from XX000 to XX200 ft.
4. Correction applied to match reference log = XX ft, determined at depth XXX00 ft..
5. Z-chart used as a secondary depth check.

Figure 7. Depth Summary Listing for subsequent trips.

Spudding

Spudding is not a recommended procedure, but it is sometimes necessary to get past an obstruction in the borehole. It generally involves making multiple attempts from varying depths or using varying cable speed to get past an obstruction.

If the distance pulled up is small, the error introduced is also small. In many cases, however, the tool is pulled back up for a considerable distance (i.e., increasing cable over wheel) in an attempt to change its orientation. Then, the correction necessary to maintain proper depth control becomes sizeable.

If multiple attempts are made, the correction necessary to maintain proper depth control also becomes sizeable.

When possible, log data is recorded over the interval where spudding occurs in case consequent damage occurs to the equipment that prevents further data acquisition. If it is not possible to pass an obstruction in the well, data is recorded while pulling out of the hole for remedial action.

Absolute depth

Measurements made with wireline logs are often used as the reference for well depth. However, differences are usually noted between wireline depth and the driller's depth. Which one is correct? The answer is neither. For more information, refer to SPE 110318, "A Technique for Improving the Accuracy of Wireline Depth Measurements."

Wireline depth measurement is subject to environmental corrections that vary with many factors:

- well profile
- mud properties
- toolstring weight
- cable type
- temperature profile
- wellbore pressure
- logging speed.

All these effects may differ from one well to another, so the depth corrections required also differ. Because of the number of factors involved, the corrections can be applied through a numerical model.

Logging down

Any short element of cable that is spooled off the winch drum as a tool is lowered downhole takes up a tension sufficient to support the weight of the tool in the well plus the weight of the cable between the winch and the tool, minus any frictional force that helps support the tool and cable. This prestretched cable passes the IDW device and its length is thus measured in the stretched condition. When this element of cable is downhole, the tension at the surface can be quite different. However, the tension on this element remains the same because it is still supporting the weight of the tool plus the weight of the cable between itself and the tool minus the frictional force.

If it is assumed that the frictional force is constant and that temperature and pressure do not affect the cable length, the tension on the cable—and thus the cable length—stays constant as the tool is lowered in the hole. Considering that all such elements remain at constant length once they have been measured, it follows that the down log is on depth. This means that the encoder-measured depth incorporates the stretched cable length, and no additional stretch correction is required.

Logging up

When the tool reaches the bottom of the well, the winch direction is reversed. This has the effect of inverting the sign of the frictional component acting on the tool and cable. In addition, if a caliper is opened, the magnitude of the frictional force can change. As a result, the cable everywhere in the borehole is subject to an increase in tension, and thus an increase in stretch.

For the surface equipment to track the true depth correctly, a delta-stretch correction must be added to compensate for the friction change (Fig. 4). Once the correction has been applied, the argument used while running in hole is again applicable, and the IDW correctly measures the displacement of the tool provided there are no further changes in friction.[‡]

Deviated wells

In deviated wells, the preceding depth analysis applies only to the vertical section of the well. Once the tool reaches the dogleg, lateral force from the wellbore supports part of the tool weight. The tool is thus shallower than the measured depth on surface; i.e., the recorded data appear deeper than the actual tool position. This is commonly referred to as tool float.

Correction modeling

Correction modeling software estimates the delta-stretch correction to be applied at the bottom of the well, as well as the expected tool re-zero depth upon return to the surface. This software can be used to correct the depth after logging. Contact your local Schlumberger representative for more information.

[‡]The main assumptions remain that the friction is constant (other than the change due to reversal of direction of cable motion), and that temperature and pressure effects on the cable may be ignored.

*Mark of Schlumberger
Copyright © 2000 Schlumberger. All rights reserved. 09-PE-0161