NAVAJO GENERATING STATION
P. O. BOX 850
PAGE, ARIZONA 86040

July 30, 2014

CERTIFIED MAIL

Dr. Deborah Jordan, Director
Air Division
Environmental Protection Agency
Region IX (AIR-1)
75 Hawthorne Street
San Francisco, CA 94105

RE: Navajo Generating Station's 2013 Particulate Emissions Test Report

Dear Dr. Jordan:

As required by the Navajo Generating Station (NGS) Federal Implementation Plan, Condition (f) (1), NGS is submitting the results of its annual mass emissions tests for particulate matter. NGS completed its annual mass emissions tests for Units 1, 2 and 3 on May 19, 2013.

The particulate testing resulted in a plant wide-average of 0.015 lb/MMBtu as compared to the permit limit of 0.060 lb/MMBtu averaged on a plant-wide basis.

Should you have any questions please feel free to contact me at (928) 645-6577 or email me at paul.ostapuk@srpnet.com.

Sincerely,

Paul Ostapuk
Manager, Environmental, Labs, Safety and Training

Cc: Stephen B. Etsitty, Exec. Director, Navajo Nation EPA
Robert Talbot, Manager, NGS
Kara Montalvo, Director, Environmental Compliance and Permitting

CATALYST
AIR MANAGEMENT, INC.

SALT RIVER PROJECT
NAVAJO GENERATING STATION
UNITS 1, 2 & 3

PARTICULATE EMISSIONS TEST REPORT

CATALYST AIR MANAGEMENT, INC.
REPORT NUMBER 264-026

JULY 24, 2014
Test Dates: June 11, 22 and 24, 2014

Prepared for
Mr. L. Dee Shakespear
Salt River Project
Navajo Generating Station
State Highway 98
Page, AZ 86040

CATALYST

AIR MANAGEMENT, INC.

STATEMENT OF VALIDITY

Salt River Project – Navajo Generating Station Units 1, 2 and 3
Catalyst Report 264-026
July 24, 2014

To the extent practical, information and data provided in this test report has been verified as true and correct.

Michael J. Taylor
President - Catalyst Air Management, Inc.
2505 Byington-Solway Road
Knoxville, TN 37931
(865) 531-0075

TABLE OF CONTENTS

LETTER OF TRANSMITTAL		
TITLE PAGE		
STATEMENT OF VALIDITY		i
TABLE OF CONTENTS		ii
PROJECT FACT SHEET		iii
1	Introduction	1
2	Summary of Test Results	1
3	Results of Testing	1-4
4	Description of Combustion Unit	5
5	Description of CEMS	5
6	Sampling Program Procedures	5-7
7	Operating Conditions	7
8	Quality Assurance	7-8
9	Discussion	8
APPENDICES		
1	Reference Method Test Results	9
	Unit 1	10-21
	Unit 2	22-33
	Unit 3	34-46
2	Plant Data	47
	Unit 1	48-52
	Unit 2	53-59
	Unit 3	60-69
3	Lab Analysis	70
	Particulate	71-73
	Coal	74-81
4	Reference Method Quality Assurance	82
	Isokinetic Sampling Equipment	83-95
	Calibration Gas Specification Sheets	96-99
5	ASTM D7036-04 AETB Information	100-105
6	Sample Calculations	106-111
7	Figures	112-115

PROJECT FACT SHEET

NAME OF SOURCE OWNER:	Salt River Project
SOURCE IDENTIFICATION:	Navajo Generating Station Units 1, 2 & 3
LOCATION OF SOURCE:	Highway 98 Page, AZ 86040
TYPE OF OPERATION:	Coal Fired Steam Generating Unit
TYPES OF TESTS PERFORMED:	Sample Traverse-EPA Method 1 Volumetric Flow Rate-EPA Method 2 Oxygen/Carbon Dioxide-EPA Method 3A Moisture Content-EPA Method 4 Particulate-EPA Method 5B
TEST COMPANY:	Catalyst Air Management, Inc. 2505 Byington-Solway Road Knoxville, TN 37931
SITE SUPERVISOR:	Josh Nicely - Test Supervisor, QSTI
TEST PERSONNEL:	Dusty King - Technician John Boys - Technician Larry Whicher - Technician
TEST DATES:	June 11, 22, and 24, 2014
OWNERS' REPRESENTATIVE:	L. Dee Shakespear
TEST OBSERVER:	None

1.0 Introduction

Catalyst Air Management, Inc. (Catalyst) was contracted by the Salt River Project (SRP) to perform compliance particulate emissions testing at Navajo Generating Station Units 1, 2 and 3 in Page, AZ.

The sampling program was conducted June 11, 22, and 24, 2014. The testing was performed by Messrs. Josh Nicely, Dusty King, John Boys and Larry Whicher of Catalyst, with the assistance of personnel assigned by SRP. Mr. L. Dee Shakespear of SRP coordinated plant operation during the testing.

2.0 Summary of Test Results

A summary of test results developed by this source sampling program are presented in Tables 1 through 4. The summary tables are presented as follows:

Table	Description	Page
1	Summary of Particulate Emissions – Compliance	1
2	Isokinetic Sampling Summary – Unit 1	2
3	Isokinetic Sampling Summary – Unit 2	3
4	Isokinetic Sampling Summary – Unit 3	4

3.0 Results of Testing

The results from the compliance testing are shown in Tables 1 through 4, and tabulated in Appendices 1 and 2. The results indicate that the facility is in compliance with the permit condition of 0.060 lb/mmBtu filterable particulate.

TABLE 1
Summary of Particulate Emissions
Navajo Generating Station

Unit	Average (lb/mmBtu)	Permitted (lb/mmBtu)
1	0.010	NA
2	0.015	NA
3	0.015	NA
Plant Average	**0.013**	**0.060 ***

* The permit limit of 0.060 lb/MMBtu is based on a plant-wide basis, as averaged from at least three sampling runs per stack, each a minimum of 60 minutes in duration, and each collecting a minimum sample of 30 dry standard cubic feet.

TABLE 2
ISOKINETIC SAMPLING SUMMARY
EPA Method 5 - Particulate

Client: **Salt River Project**
Plant: **NGS**
Unit : **1**
Location: **Stack**

Run Number:		**1**	**2**	**3**
Date:		6/22/2014	6/22/2014	6/22/2014
Run Time:	Start	7:42	9:07	10:35
	End	8:47	10:11	11:39
Unit Load (MW):		811	810	811
DN - Nozzle Diameter:		0.240	0.240	0.240
Pbar - Barometric Pressure:		25.13	25.13	25.13
TT - Sampling Time:		60	60	60
VM - Meter Volume:		46.405	46.950	47.589
TM - Avg. Meter Temp (F):		83	91	93
PM - Avg. Delta H (in. of H2O):		1.558	1.550	1.583
Y - Meter Calibration Factor:		1.01	1.01	1.01
VMSTD - Std. Gas Volume (SCF):		38.434	38.343	38.693
Vlc - Volume Water Collected:		132	139	130
%M - Percent Moisture:		13.92	14.58	13.66
Bws - Mole Fraction, Dry:		0.1392	0.1458	0.1366
%CO2 - Carbon Dioxide, Dry:		13.2	13.1	13.0
%O2 - Oxygen, Dry:		6.9	7.0	7.0
%EA - Excess Air		48.6	49.7	49.6
MD - Dry Molecular Weight:		30.39	30.38	30.36
MS - Wet Molecular Weight:		28.66	28.57	28.67
A - Stack Area, SQ.FT:		948.4	948.4	948.4
PS - Static Press. (in. of H2O):		25.26	25.26	25.26
TS - Stack Temp. (F):		117	115	118
CP - Pitot Coefficient:		0.84	0.84	0.84
VS - Stack Gas Velocity (AFPS):		49.6	49.4	50.2
QS - Stack Gas Volume (DSCFM):		1,874,287	1,861,456	1,900,470
QA - Stack Gas Volume (ACFM):		2,819,899	2,810,841	2,854,756
%I - Isokinetic Ratio:		103.2	103.7	102.5
Particulate Emissions				
Mg - Catch weight:		9.9	12.1	12.4
Gr/DSCF - Emission Concentration:		0.004	0.005	0.005
lb/mmBtu - Emission Rate:		0.008	0.010	0.010

Average Gr/DSCF	0.005
Average lb/mmBtu	0.010

TABLE 3
ISOKINETIC SAMPLING SUMMARY
EPA Method 5 - Particulate

Client: **Salt River Project**
Plant: **NAVAJO**
Unit : **2**
Location: **Stack**

Run Number:		**1**	**2**	**3**
Date:		6/24/2014	6/24/2014	6/24/2014
Run Time:	Start	7:29	9:53	11:09
	End	8:34	10:57	12:13
Unit Load (MW):		808	808	807
DN - Nozzle Diameter:		0.240	0.240	0.240
Pbar - Barometric Pressure:		25.17	25.17	25.17
TT - Sampling Time:		60	60	60
VM - Meter Volume:		50.243	50.813	48.351
TM - Avg. Meter Temp (F):		85	88	91
PM - Avg. Delta H (in. of H2O):		1.792	1.842	1.667
Y - Meter Calibration Factor:		1.01	1.01	1.01
VMSTD - Std. Gas Volume (SCF):		41.580	41.824	39.522
Vlc - Volume Water Collected:		130	135	128
%M - Percent Moisture:		12.84	13.20	13.24
Bws - Mole Fraction, Dry:		0.1284	0.1320	0.1324
%CO2 - Carbon Dioxide, Dry:		12.5	13.0	12.1
%O2 - Oxygen, Dry:		7.6	7.2	8.0
%EA - Excess Air		56.3	51.9	61.1
MD - Dry Molecular Weight:		30.30	30.37	30.26
MS - Wet Molecular Weight:		28.72	28.74	28.63
A - Stack Area, SQ.FT:		948.4	948.4	948.4
PS - Static Press. (in. of H2O):		25.32	25.32	25.32
TS - Stack Temp. (F):		115	119	116
CP - Pitot Coefficient:		0.84	0.84	0.84
VS - Stack Gas Velocity (AFPS):		53.0	53.7	51.1
QS - Stack Gas Volume (DSCFM):		2,042,093	2,046,809	1,957,198
QA - Stack Gas Volume (ACFM):		3,015,220	3,053,225	2,909,915
%I - Isokinetic Ratio:		102.5	102.9	101.7
Particulate Emissions				
Mg - Catch weight:		21.4	18.2	16.3
Gr/DSCF - Emission Concentration:		0.008	0.007	0.006
lb/mmBtu - Emission Rate:		0.017	0.014	0.014

Average Gr/DSCF	0.007
Average lb/mmBtu	0.015

TABLE 4
ISOKINETIC SAMPLING SUMMARY
EPA Method 5 - Particulate

Client: **Salt River Project**
Plant: **NGS**
Unit : **3**
Location: **Stack**

Run Number:		**1**	**2**	**3**
Date:		6/11/2014	6/11/2014	6/11/2014
Run Time:	Start	10:20	13:02	15:28
	End	12:26	15:08	17:35
Unit Load (MW):		807	805	805
DN - Nozzle Diameter:		0.240	0.240	0.240
Pbar - Barometric Pressure:		25.07	25.07	25.07
TT - Sampling Time:		120	120	120
VM - Meter Volume:		101.916	102.338	101.486
TM - Avg. Meter Temp (F):		89	93	95
PM - Avg. Delta H (in. of H2O):		1.808	1.808	1.716
Y - Meter Calibration Factor:		1.01	1.01	1.01
VMSTD - Std. Gas Volume (SCF):		83.338	83.065	82.092
Vlc - Volume Water Collected:		291	284	278
%M - Percent Moisture:		14.12	13.87	13.76
Bws - Mole Fraction, Dry:		0.1412	0.1387	0.1376
%CO2 - Carbon Dioxide, Dry:		13.2	13.2	13.2
%O2 - Oxygen, Dry:		6.4	6.5	6.4
%EA - Excess Air		43.2	44.2	43.2
MD - Dry Molecular Weight:		30.37	30.37	30.37
MS - Wet Molecular Weight:		28.62	28.66	28.67
A - Stack Area, SQ.FT:		948.4	948.4	948.4
PS - Static Press. (in. of H2O):		25.17	25.17	25.17
TS - Stack Temp. (F):		116	116	115
CP - Pitot Coefficient:		0.84	0.84	0.84
VS - Stack Gas Velocity (AFPS):		51.6	51.4	51.2
QS - Stack Gas Volume (DSCFM):		1,945,571	1,941,290	1,939,565
QA - Stack Gas Volume (ACFM):		2,938,003	2,923,758	2,913,928
%I - Isokinetic Ratio:		107.8	107.7	106.5
Particulate Emissions				
Mg - Catch weight:		34.4	40.0	43.7
Gr/DSCF - Emission Concentration:		0.006	0.007	0.008
lb/mmBtu - Emission Rate:		0.013	0.015	0.017

Average Gr/DSCF	0.007
Average lb/mmBtu	0.015

4.0 Description of Combustion Units

Navajo Generating Station (NGS) is located on the Navajo Reservation, 6 miles east of Page, Arizona, off U.S. Highway 98. NGS has three 750 MW (net) coal fired units with hot side electrostatic precipitators and wet limestone scrubbers.

5.0 Description of CEMS

The Units 1, 2 and 3 CEMS are dilution extraction systems that measures SO_2, NOx, CO_2 and flow at the sampling location. The CEMS analyzers includes a TEI Model 43i SO_2 analyzer, TEI Model 42i NOx analyzer, TEI Model 410i CO_2 analyzer, TEI Model 48i CO analyzer and a Teledyne 1500 Ultraflow flow monitor.

Unit 1 CEMS

(1) TEI SO_2 – 43i - Serial No. - 1212352692
(1) TEI NOx – 42i - Serial No. - 1212352695
(1) TEI CO_2 – 410i - Serial No. - 1212352699
(1) TEI CO – 48i - Serial No. - 1103947059
(1) Teledyne Ultraflow150 - Serial No. - 1501118

Unit 2 CEMS

(1) TEI SO_2 – 43i - Serial No. - 1212352693
(1) TEI NOx – 42i - Serial No. - 1212352696
(1) TEI CO_2 – 410i - Serial No. - 1212352700
(1) TEI CO – 48i - Serial No. - 100394547
(1) Teledyne Ultraflow150 - Serial No. - 1501119

Unit 3 CEMS

(1) TEI SO_2 – 43i - Serial No. - 1212352694
(1) TEI NOx – 42i - Serial No. - 1212352697
(1) TEI CO_2 – 410i - Serial No. - 1212352701
(1) TEI CO – 48i - Serial No. - CM08490074
(1) Teledyne Ultraflow150 - Serial No. - 1501120

The recording and reporting requirements are performed by an ESC StackVision computerized data acquisition and handling system. The data acquisition and handling system utilizes an Fc factor (scf/mmBtu) of 1800 to calculate NOx emissions in lbs/mmBtu. The data acquisition and handling system reports the volumetric flow data in standard cubic feet per hour (SCFH).

6.0 Sampling Program Procedures

The following test methods were utilized during the test program:

EPA Method 1	Sample and Velocity Traverse for Stationary Sources
EPA Method 2	Determination of Stack Gas Velocity and Volumetric Flow Rate

EPA Method 3A	Gas Analysis for CO_2, O_2, Excess Air and Dry Molecular Weight (Instrumental Analyzer Method)
EPA Method 4	Determination of Moisture Content in Stack Gas
EPA Method 5B	Determination of Non-Sulfuric Acid Particulate Emissions from Stationary Sources

Three (3) 60-minute test runs were performed on Units 1, 2, and three (3) 120-minute runs on Unit 3.

6.1 Particulate – EPA Method 5B

The flue gas sample was extracted isokinetically from the gas stream and the particulate emissions were determined by gravimetrically determining the amount of particulate matter collected in the nozzle, probe, filter holder and filter. The probe and filter were both maintained at approximately 320° F. The sampling train consists of the following equipment connected in series:

Glass lined probe and stainless steel nozzle

Glass fiber filter within a heated filter holder with Teflon support

A modified Greenburg-Smith impinger containing 100 ml of distilled water

A Greenburg-Smith impinger containing 100 ml of distilled water

A modified Greenburg-Smith impinger, empty

A modified Greenburg-Smith impinger containing approximately 250g of silica gel

The sample volume was measured by passing it through a calibrated dry gas meter. An S-type pitot tube was attached to the probe to measure stack gas velocity and to maintain isokinetic sampling. A K-type thermocouple was also attached to the probe to measure the gas temperature.

After the run, the probe, nozzle and connecting glassware ahead of the filter were brushed and rinsed with acetone. The washings were retained in labeled, glass sample containers for analysis. The impinger contents were measured for increase in volume. The silica gel was returned to the original tared container and weighed to determine moisture gain.

Particulate matter was determined by using the analytical procedures outlined in EPA Method 5B.

a. Dry each filter at 320° F, desiccate to a constant weight and record the results to 0.1 mg.
b. Measure the acetone rinse. Evaporate the acetone rinse in a tared beaker, desiccate to a constant weight and record results to 0.1 mg.

PM emission results are presented in units of grains per dry standard cubic feet (gr/dscf) and pounds per million British Thermal Units (lb/MMBtu, the units of the filterable PM emissions standard). The PM results in units of lb/MMBtu were calculated in accordance with EPA Method 19.

6.2 O_2 and CO_2 – EPA Method 3A

A sample was continuously extracted and introduced into a Servomex 1400 O_2/CO_2 analyzer for determination of gas concentrations.

The sample was extracted through a heated stainless steel probe, heated sample line and sample conditioner to dry the sample before it enters the analyzers. A sample flow control system was used to control the flow into the analyzers. The analyzers were calibrated prior to starting the testing with EPA Protocol 1, calibration gases. A system bias check was performed before each run by introducing the zero and upscale gas at the back end of the sample probe. The system bias check was repeated at the end of each test run to determine the analyzer zero and calibration drift.

The O_2/CO_2 analyzer spans were 0-22% and 0-17%, respectively. The O_2 calibration gases utilized were 12.15% and 21.90%. The CO_2 calibration gases were 9.996% and 16.67%.

The sampling was conducted in a vertical section of the stack, which is 34.75 feet in diameter. There are four (4) test ports orientated 90 degrees apart. The test ports are located > 8.0 diameters downstream and > 2.0 diameters upstream from the nearest flow disturbance. The sampling was performed at three (3) traverse points for each port, 12 total points.

All sampling procedures, quality assurance, analysis and calculations utilized for the program were performed in accordance with the Code of Federal Regulations, Title 40, Part 60, Appendix A.

7.0 Operating Conditions

Operating conditions were monitored throughout the duration of the sampling program by SRP personnel. The testing was performed June 11, 22, and 24, 2014, as follows:

UNIT	MW	DATE	# of RUNS
1	811	6/22/14	3
2	808	6/24/14	3
3	806	6/11/14	3

8.0 Quality Assurance Procedures

The quality assurance procedures utilized during the testing activities followed guidelines set forth by the previously-mentioned methods and the EPA Quality Assurance Handbook for Source Sampling. The specific procedures for this test program are listed below.

8.1 Isokinetic Equipment

The sample nozzles were visually inspected and measured across three different diameters to determine the appropriate nozzle diameter.

S-type pitot tubes were visually inspected and measured to meet the design specifications of EPA Method 2 for a 0.84 pitot coefficient. Both legs of the pitot tube were leak checked before and after each sample run.

The stack thermocouples were calibrated prior to the testing and a post-test check was performed after the testing project.

The manometer was leveled and zeroed before each sample run.

The dry gas meter is fully calibrated annually using an EPA intermediate standard. Post -test dry gas meter checks were completed to verify the accuracy of the meter Yi.

Pre-test and post-test leak checks were completed and were less than 0.02 cfm at the highest sampling vacuum.

8.2 Instrumental Methods

Analyzer calibrations, system bias check and drift checks were completed before and after each sample run utilizing EPA Protocol calibration gases.

The analyzer interference responses were determined in accordance with Section 8.2.7 of Method 7E and Section 16 of Method 6C.

8.3 Data and Calculations

A manual calculation check is performed on a single run for each parameter.

9.0 Discussion

9.1 Chain of Custody

All the field samples were collected, sealed and transported to the Catalyst facility in Knoxville, TN under the supervision of Rick Derrera. The samples were labeled to identify the following:

Client and source
Date
Type of Sample
Run number
Sample location
Sample fraction

9.2 Sampling Conditions and Concerns

There were no delays or interruptions during the testing.

APPENDIX 1
REFERENCE METHOD TEST RESULTS

Unit 1

Particulate Matter Determination Spreadsheet

Client: **Salt River Project**
Unit Tested: **Navajo 1**
Sampling Location: **Stack**
Run No: **1**

Date: 6/22/14
Start Time: 7:42
End Time: 8:47

Diameter of Nozzle: 0.240 inches
Area of Nozzle (An): 3.14E-04 sq. ft.
Barometric Pressure (Pbar): 25.13 in. Hg
Gas Meter Factor (Y): 1.01
Total Sample Time: 60.00 min
Number of Sample Points: 12

Stack Diameter: 417 inches
Area of Stack (As): 948.4 sq. ft.
Pitot Coefficient (Cp): 0.84
Volume of Moisture (Vlc): 132.0 ml
% CO2: 13.2 %
% O2: 6.9 %

Point ID	Clock Time	Time	Meter Volume	Delta P	Delta H	Dry Gas Meter Temp In	Dry Gas Meter Temp Out	Stack Temp	Static Pressure	SDE	VEL
	7:42	0.0	830.406								
A-1		5.0	834.3	0.62	1.60	78	76	117		18.91	50.5
2		10.0	838.2	0.61	1.60	79	76	116	1.80	18.74	50.0
3	7:57	15.0	842.108	0.58	1.50	80	76	117		18.29	48.8
	7:58		842.108								
B-1		20.0	845.8	0.61	1.60	82	78	117		18.76	50.1
2		25.0	847.9	0.61	1.60	84	79	117		18.76	50.1
3	8:13	30.0	853.481	0.55	1.40	86	80	118		17.83	47.6
	8:15		853.481								
C-1		35.0	857.4	0.62	1.60	88	82	118		18.93	50.5
2		40.0	861.2	0.60	1.60	88	82	117		18.61	49.7
3	8:30	45.0	865.096	0.56	1.50	89	83	118		17.99	48.0
	8:32		865.096								
D-1		50.0	869.0	0.63	1.60	90	84	118		19.08	50.9
2		55.0	872.9	0.61	1.60	92	84	117		18.76	50.1
3	8:47	60.0	876.811	0.57	1.50	92	85	118		18.15	48.4
RESULTS		TT	VM	SQ RT PIT	PM		TM	TS	STATIC	SDE	VEL
		60.0	46.405	0.773	1.558		83	117	1.80		
		net	net	avg	avg		avg	avg	avg	avg	ft/sec

Ps: 25.26 in. Hg
Bws: 0.1392

Vm(std): 38.434 cf
Md: 30.39 lb/lmol

Vw(std): 6.217 cf
Ms: 28.66 lb/lmol

%H20: 13.92 %
%EA: 48.61 %

Stack Gas Velocity (Vs): 49.6 ft/sec
Stack Gas Velocity (Vs): 2,973.3 ft/min
Stack Gas Flow Rate (Qstd): 1,874,287 DSCFM
Stack Gas Flow Rate (Qa): 2,819,899 ACFM
Isokinectic Ratio (I): **103.2** %

Weight Collected: **9.9** mg
PM Concentration: 7.53 mg/ACM
PM Concentration: 0.004 grains/dscf
Fd - Emission Rate: 0.008 lb/mmBtu
Fc - Emission Rate: 0.008 lb/mmBtu
PM Concentration: **4.51** mg/ACM @160C (wet)

Particulate Matter Determination Spreadsheet

Client: **Salt River Project**
Unit Tested: **Navajo 1**
Sampling Location: **Stack**
Run No: **2**

Date: 6/22/14
Start Time: 9:07
End Time: 10:11

Diameter of Nozzle: 0.240 inches
Area of Nozzle (An): 3.14E-04 sq. ft.
Barometric Pressure (Pbar): 25.13 in. Hg
Gas Meter Factor (Y): 1.01
Total Sample Time: 60.00 min
Number of Sample Points: 12

Stack Diameter: 417 inches
Area of Stack (As): 948.4 sq. ft.
Pitot Coefficient (Cp): 0.84
Volume of Moisture (Vlc): 139.0 ml
% CO2: 13.1 %
% O2: 7.0 %

Point ID	Clock Time	Time	Meter Volume	Delta P	Delta H	Dry Gas Meter Temp In	Dry Gas Meter Temp Out	Stack Temp	Static Pressure	SDE	VEL
	9:07	0.0	877.016								
D-1		5.0	881.0	0.63	1.60	90	86	117		19.07	51.0
2		10.0	884.9	0.61	1.60	91	86	116	1.80	18.74	50.1
3	9:22	15.0	888.821	0.58	1.50	93	87	116		18.28	48.9
	9:24		888.821								
C-1		20.0	892.7	0.62	1.60	92	87	116		18.90	50.5
2		25.0	896.7	0.61	1.60	93	90	115		18.73	50.1
3	9:39	30.0	900.615	0.56	1.50	94	87	115		17.94	48.0
	9:40		900.615								
B-1		35.0	904.6	0.61	1.60	94	88	115		18.73	50.1
2		40.0	908.4	0.59	1.50	95	88	114		18.40	49.2
3	9:55	45.0	912.179	0.55	1.40	95	88	116		17.80	47.6
	9:56		912.179								
A-1		50.0	916.1	0.61	1.60	95	88	113		18.70	50.0
2		55.0	920.0	0.60	1.60	96	89	114		18.56	49.6
3	10:11	60.0	923.966	0.56	1.50	96	89	113		17.91	47.9
RESULTS		TT	VM		PM		TM	TS	STATIC	SDE	VEL
		60.0	46.950	0.771	1.550		91	115	1.80		
		net	net	avg	avg		avg	avg	avg	avg	ft/sec

Ps: 25.26 in. Hg
Bws: 0.1458

Vm(std): 38.343 cf
Md: 30.38 lb/lmol

Vw(std): 6.547 cf
Ms: 28.57 lb/lmol

%H20: 14.58 %
%EA: 49.67 %

Stack Gas Velocity (Vs): 49.4 ft/sec
Stack Gas Velocity (Vs): 2,963.7 ft/min
Stack Gas Flow Rate (Qstd): 1,861,456 DSCFM
Stack Gas Flow Rate (Qa): 2,810,841 ACFM
Isokinectic Ratio (I): **103.7** %

Weight Collected: **12.1** mg
PM Concentration: 9.10 mg/ACM
PM Concentration: 0.005 grains/dscf
Fd - Emission Rate: 0.010 lb/mmBtu
Fc - Emission Rate: 0.010 lb/mmBtu
PM Concentration: **5.49** mg/ACM @160C (wet)

Particulate Matter Determination Spreadsheet

Client: **Salt River Project**
Unit Tested: **Navajo 1**
Sampling Location: **Stack**
Run No: **3**

Date: 6/22/14
Start Time: 10:35
End Time: 11:39

Diameter of Nozzle: 0.240 inches
Area of Nozzle (An): 3.14E-04 sq. ft.
Barometric Pressure (Pbar): 25.13 in. Hg
Gas Meter Factor (Y): 1.01
Total Sample Time: 60.00 min
Number of Sample Points: 12

Stack Diameter: 417 inches
Area of Stack (As): 948.4 sq. ft.
Pitot Coefficient (Cp): 0.84
Volume of Moisture (Vlc): 130.0 ml
% CO2: 13.0 %
% O2: 7.0 %

Point ID	Clock Time	Time	Meter Volume	Delta P	Delta H	Dry Gas Meter Temp In	Dry Gas Meter Temp Out	Stack Temp	Static Pressure	SDE	VEL
	10:35	0.0	924.904								
A-1		5.0	928.8	0.63	1.60	93	91	118		19.08	50.9
2		10.0	932.8	0.61	1.60	93	91	117	1.70	18.76	50.1
3	10:50	15.0	936.682	0.56	1.50	94	90	117		17.98	48.0
	10:51		936.682								
B-1		20.0	940.6	0.62	1.60	94	90	118		18.93	50.5
2		25.0	944.6	0.60	1.60	95	90	118		18.62	49.7
3	11:06	30.0	948.508	0.57	1.50	96	93	117		18.14	48.4
	11:07		948.508								
C-1		35.0	932.5	0.64	1.70	95	90	117		19.22	51.3
2		40.0	956.5	0.63	1.60	97	90	117		19.07	50.9
3	11:22	45.0	960.454	0.60	1.50	97	91	118		18.62	49.7
	11:24		960.454								
D-1		50.0	964.4	0.65	1.70	97	91	118		19.38	51.7
2		55.0	968.5	0.63	1.60	98	91	120		19.12	51.0
3	11:39	60.0	972.493	0.60	1.50	99	91	121		18.67	49.8
RESULTS		TT	VM	SQ RT PIT	PM		TM	TS	STATIC	SDE	VEL
		60.0	47.589	0.782	1.583		93	118	1.70		
		net	net	avg	avg		avg	avg	avg	avg	ft/sec

Ps: 25.26 in. Hg
Bws: 0.1366

Vm(std): 38.693 cf
Md: 30.36 lb/lmol

Vw(std): 6.123 cf
Ms: 28.67 lb/lmol

%H20: 13.66 %
%EA: 49.58 %

Stack Gas Velocity (Vs): 50.2 ft/sec
Stack Gas Velocity (Vs): 3,010.0 ft/min
Stack Gas Flow Rate (Qstd): 1,900,470 DSCFM
Stack Gas Flow Rate (Qa): 2,854,756 ACFM
Isokinectic Ratio (I): **102.5** %

Weight Collected: **12.4** mg
PM Concentration: 9.20 mg/ACM
PM Concentration: 0.005 grains/dscf
Fd - Emission Rate: 0.010 lb/mmBtu
Fc - Emission Rate: 0.010 lb/mmBtu
PM Concentration: **5.63** mg/ACM @160C (wet)

CATALYST AIR MANAGEMENT Inc.
CALIBRATION DATA

CLIENT: Salt River Project
PLANT: NGS
UNIT: 1
TEST: 3A
LOCATION: Stack

RUN #: 1-3

DATE: 6/22/2014

Run 1-7

GAS UNITS	ANALYZER SCALE	CYLINDER VALUE	ANALYZER VALUE	DIFF PPM	% SPAN	Pass Yes\No
O2, %		0.00	0.00	0.00	0.00	**YES**
O2, %	**25**	12.19	12.15	0.04	0.18	**YES**
O2, %		21.90	21.90	0.00	0.00	**YES**
CO2, %		0.00	0.00	0.00	0.00	**YES**
CO2, %	**20**	10.130	10.07	0.06	0.36	**YES**
CO2, %		16.67	16.69	0.02	0.12	**YES**

RUN 1
SYSTEM CALIBRATION BIAS AND DRIFT DATA

GAS UNITS	ANALYZER VALUE	PRE-TEST CHECK	% SPAN	Pass YES\NO	POST-TEST CHECK	% SPAN	% DRIFT	Pass YES\NO
O2, %	0.00	0.00	0.00	**YES**	0.00	0.00	0.00	**YES**
O2, %	12.15	12.12	0.14	**YES**	12.09	0.27	0.14	**YES**
CO2, %	0.00	0.00	0.00	**YES**	0.00	0.00	0.00	**YES**
CO2, %	10.07	10.02	0.30	**YES**	10.05	0.12	0.18	**YES**

UNCORRECTED ANALYZER VALUES

	DRY
O2, %	6.87
CO2, %	13.11

ANALYZER VALUES CORRECTED FOR DRIFT

	DRY
O2, %	6.9
CO2, %	13.2

RUN 2
SYSTEM CALIBRATION BIAS AND DRIFT DATA

GAS UNITS	ANALYZER VALUE	PRE-TEST CHECK	% SPAN	Pass YES\NO	POST-TEST CHECK	% SPAN	% DRIFT	Pass YES\NO
O2, %	0.00	0.00	0.00	**YES**	0.00	0.00	0.00	**YES**
O2, %	12.15	12.09	0.27	**YES**	12.15	0.00	0.27	**YES**
CO2, %	0.00	0.00	0.00	**YES**	0.00	0.00	0.00	**YES**
CO2, %	10.07	10.05	0.12	**YES**	10.11	0.24	0.36	**YES**

UNCORRECTED ANALYZER VALUES

	DRY
O2, %	6.93
CO2, %	13.08

ANALYZER VALUES CORRECTED FOR DRIFT

	DRY
O2, %	7.0
CO2, %	13.1

RUN 3
SYSTEM CALIBRATION BIAS AND DRIFT DATA

GAS UNITS	ANALYZER VALUE	PRE-TEST CHECK	% SPAN	Pass YES\NO	POST-TEST CHECK	% SPAN	% DRIFT	Pass YES\NO
O2, %	0.00	0.00	0.00	**YES**	0.00	0.00	0.00	**YES**
O2, %	12.15	12.15	0.00	**YES**	12.02	0.59	0.59	**YES**
CO2, %	0.00	0.00	0.00	**YES**	0.00	0.00	0.00	**YES**
CO2, %	10.07	10.11	0.24	**YES**	10.15	0.48	0.24	**YES**

UNCORRECTED ANALYZER VALUES

	DRY
O2, %	6.98
CO2, %	13.00

ANALYZER VALUES CORRECTED FOR DRIFT

	DRY
O2, %	7.0
CO2, %	13.0

CATALYST AIR MANAGEMENT Inc.
O2/CO2 DATA

Run 1 DATE	TIME	O2	CO2
6/22/2014	7:42	6.95	12.93
6/22/2014	7:43	6.91	13.03
6/22/2014	7:44	6.88	13.04
6/22/2014	7:45	6.96	13.07
6/22/2014	7:46	6.8	13.24
6/22/2014	7:47	6.69	13.28
6/22/2014	7:48	6.92	13.06
6/22/2014	7:49	6.81	13.09
6/22/2014	7:50	6.82	13.08
6/22/2014	7:51	7.01	12.93
6/22/2014	7:52	6.94	13.05
6/22/2014	7:53	6.88	13.19
6/22/2014	7:54	6.85	13.16
6/22/2014	7:55	6.79	13.22
6/22/2014	7:56	6.77	13.17
6/22/2014	7:57	6.86	13.02
6/22/2014	7:58	6.87	13.08
6/22/2014	7:59	6.86	13.08
6/22/2014	8:00	6.96	13.08
6/22/2014	8:01	6.83	13.24
6/22/2014	8:02	6.75	13.25
6/22/2014	8:03	6.84	13.16
6/22/2014	8:04	6.76	13.14
6/22/2014	8:05	6.81	13.11
6/22/2014	8:06	6.9	13.05
6/22/2014	8:07	6.89	13.11
6/22/2014	8:08	6.83	13.25
6/22/2014	8:09	6.85	13.18
6/22/2014	8:10	6.79	13.24
6/22/2014	8:11	6.75	13.19
6/22/2014	8:12	6.91	12.98
6/22/2014	8:13	6.92	13.07
6/22/2014	8:14	6.85	13.1
6/22/2014	8:15	6.94	13.12
6/22/2014	8:16	6.85	13.22
6/22/2014	8:17	6.76	13.26
6/22/2014	8:18	6.93	13.09
6/22/2014	8:19	6.8	13.12
6/22/2014	8:20	6.82	13.1
6/22/2014	8:21	7.04	12.93
6/22/2014	8:22	6.91	13.11
6/22/2014	8:23	6.89	13.2
6/22/2014	8:24	6.93	13.1
6/22/2014	8:25	6.87	13.18
6/22/2014	8:26	6.8	13.17
6/22/2014	8:27	6.89	13.01
6/22/2014	8:28	6.89	13.09
6/22/2014	8:29	6.87	13.09
6/22/2014	8:30	6.95	13.11
6/22/2014	8:31	6.82	13.26
6/22/2014	8:32	6.76	13.25
6/22/2014	8:33	6.83	13.18
6/22/2014	8:34	6.8	13.11
6/22/2014	8:35	6.88	13.05
6/22/2014	8:36	6.98	12.98
6/22/2014	8:37	6.98	13.04
6/22/2014	8:38	6.93	13.15
6/22/2014	8:39	6.98	13.06
6/22/2014	8:40	6.92	13.13
6/22/2014	8:41	6.82	13.15
6/22/2014	8:42	6.98	12.93
6/22/2014	8:43	7.06	12.94
6/22/2014	8:44	6.97	13.01
6/22/2014	8:45	7.03	13.04
6/22/2014	8:46	6.86	13.23
6/22/2014	8:47	6.72	13.29
		6.87	**13.11**

Run 2 DATE	TIME	O2	CO2
6/22/2014	9:07	6.98	13.04
6/22/2014	9:08	6.88	13.23
6/22/2014	9:09	6.89	13.17
6/22/2014	9:10	6.79	13.26
6/22/2014	9:11	6.74	13.23
6/22/2014	9:12	6.92	12.98
6/22/2014	9:13	6.97	13.01
6/22/2014	9:14	6.93	13.05
6/22/2014	9:15	7	13.06
6/22/2014	9:16	6.97	13.19
6/22/2014	9:17	6.91	13.16
6/22/2014	9:18	6.89	13.1
6/22/2014	9:19	6.99	12.94
6/22/2014	9:20	6.97	13.03
6/22/2014	9:21	6.91	13.07
6/22/2014	9:22	7	13.07
6/22/2014	9:23	6.97	13.14
6/22/2014	9:24	6.88	13.17
6/22/2014	9:25	6.9	13.14
6/22/2014	9:26	6.86	13.08
6/22/2014	9:27	6.89	13.05
6/22/2014	9:28	6.89	13.17
6/22/2014	9:29	6.79	13.26
6/22/2014	9:30	6.74	13.23
6/22/2014	9:31	6.92	12.98
6/22/2014	9:32	6.97	13.01
6/22/2014	9:33	6.93	13.05
6/22/2014	9:34	7	13.06
6/22/2014	9:35	6.97	13.19
6/22/2014	9:36	6.86	13.06
6/22/2014	9:37	7.06	12.91
6/22/2014	9:38	6.97	13.05
6/22/2014	9:39	6.92	13.19
6/22/2014	9:40	6.93	13.13
6/22/2014	9:41	6.91	13.16
6/22/2014	9:42	6.89	13.1
6/22/2014	9:43	6.99	12.94
6/22/2014	9:44	6.97	13.03
6/22/2014	9:45	6.91	13.07
6/22/2014	9:46	7	13.07
6/22/2014	9:47	6.97	13.14
6/22/2014	9:48	6.88	13.17
6/22/2014	9:49	6.9	13.14
6/22/2014	9:50	6.98	12.93
6/22/2014	9:51	7.06	12.94
6/22/2014	9:52	6.97	13.01
6/22/2014	9:53	7.03	13.04
6/22/2014	9:54	6.86	13.23
6/22/2014	9:55	6.72	13.29
6/22/2014	9:56	6.91	13.09
6/22/2014	9:57	6.84	13.09
6/22/2014	9:58	6.86	13.06
6/22/2014	9:59	7.06	12.91
6/22/2014	10:00	6.97	13.05
6/22/2014	10:01	6.92	13.19
6/22/2014	10:02	6.93	13.13
6/22/2014	10:03	6.91	13.16
6/22/2014	10:04	6.89	13.1
6/22/2014	10:05	6.99	12.94
6/22/2014	10:06	7.14	12.88
6/22/2014	10:07	7.06	12.96
6/22/2014	10:08	7.02	13.07
6/22/2014	10:09	7.06	12.99
6/22/2014	10:10	7.06	12.98
6/22/2014	10:11	6.91	13.11
		6.93	**13.08**

Run 3 DATE	TIME	O2	CO2
6/22/2014	10:35	6.95	12.95
6/22/2014	10:36	7.06	12.88
6/22/2014	10:37	7.06	12.92
6/22/2014	10:38	6.95	13.11
6/22/2014	10:39	6.96	13.09
6/22/2014	10:40	6.86	13.17
6/22/2014	10:41	6.85	13.14
6/22/2014	10:42	6.99	12.91
6/22/2014	10:43	7.01	12.95
6/22/2014	10:44	6.98	12.98
6/22/2014	10:45	7.1	12.89
6/22/2014	10:46	6.96	13.15
6/22/2014	10:47	6.8	13.22
6/22/2014	10:48	6.96	13.03
6/22/2014	10:49	6.92	13.05
6/22/2014	10:50	6.87	13.02
6/22/2014	10:51	7.11	12.84
6/22/2014	10:52	7.01	12.98
6/22/2014	10:53	7.01	13.05
6/22/2014	10:54	7.05	13.02
6/22/2014	10:55	6.94	13.12
6/22/2014	10:56	6.9	13.11
6/22/2014	10:57	6.98	12.92
6/22/2014	10:58	7	12.94
6/22/2014	10:59	6.95	13
6/22/2014	11:00	7.08	12.89
6/22/2014	11:01	7.06	13.04
6/22/2014	11:02	6.92	13.13
6/22/2014	11:03	6.97	13.05
6/22/2014	11:04	6.95	13.04
6/22/2014	11:05	6.93	12.96
6/22/2014	11:06	7.1	12.84
6/22/2014	11:07	7.13	12.85
6/22/2014	11:08	7	13.03
6/22/2014	11:09	7	13.06
6/22/2014	11:10	6.96	13.06
6/22/2014	11:11	6.88	13.12
6/22/2014	11:12	6.98	12.91
6/22/2014	11:13	6.99	12.94
6/22/2014	11:14	6.98	12.97
6/22/2014	11:15	7.09	12.86
6/22/2014	11:16	7.01	13.08
6/22/2014	11:17	6.85	13.17
6/22/2014	11:18	7.03	12.94
6/22/2014	11:19	6.99	13
6/22/2014	11:20	6.86	13.01
6/22/2014	11:21	7.09	12.81
6/22/2014	11:22	7.04	12.92
6/22/2014	11:23	7.01	12.98
6/22/2014	11:24	7.05	13.01
6/22/2014	11:25	6.99	13.03
6/22/2014	11:26	6.88	13.13
6/22/2014	11:27	6.95	12.94
6/22/2014	11:28	6.98	12.91
6/22/2014	11:29	7.01	12.92
6/22/2014	11:30	7.04	12.89
6/22/2014	11:31	7.07	12.99
6/22/2014	11:32	6.95	13.06
6/22/2014	11:33	6.97	12.99
6/22/2014	11:34	6.9	13.07
6/22/2014	11:35	6.84	12.99
6/22/2014	11:36	6.98	12.9
6/22/2014	11:37	7.05	12.85
6/22/2014	11:38	6.99	12.95
6/22/2014	11:39	7	13.02
		6.98	**13.00**

RUN		1	2	3	4	5	6	7
IMP	**1**	100.0	100.0	100.0	100.0	100.0	100.0	100.0
		186.0	196.0	198.0	200.0	198.0	198.0	202.0
		86.0	96.0	98.0	100.0	98.0	98.0	102.0
IMP	**2**	100.0	100.0	100.0	100.0	100.0	100.0	100.0
		134.0	130.0	122.0	124.0	126.0	126.0	126.0
		34.0	30.0	22.0	24.0	26.0	26.0	26.0
IMP	**3**	0.0	0.0	0.0	0.0	0.0	0.0	0.0
		2.0	2.0	2.0	2.0	2.0	2.0	2.0
		2.0	2.0	2.0	2.0	2.0	2.0	2.0
	Gel	250.0	250.0	250.0	250.0	250.0	250.0	250.0
		260.0	261.0	258.0	254.0	256.0	256.0	257.0
		10.0	11.0	8.0	4.0	6.0	6.0	7.0
TOTAL		**132.0**	**139.0**	**130.0**	**130.0**	**132.0**	**132.0**	**137.0**

CATALYST AIR MANAGEMENT, INC.
Air Quality Testing Services
2505 Byington Solway Road
Knoxville, TN 37931
(865) 531-0075
(865) 531-0750 Fax

Field Isokinetic Data Sheet

Client	SRP	Pitot No.	CAM 10-01	Filter Number	C3B-386
Plant	Navajo	Nozzle No.	CAM 203	Initial Leak (Samp.)	0.001 @ 10"
Location	Unit 1 Stack	Nozzle Dn.	.240	Initial Leak (Pitot)	OK @ 4"
Test	M5b	Stack TC No.	CAM P-14		OK @ 4"
Run	1	P_B	25.13		
Date	96-22-14	Ambient Temp	84°F	Final Leak (Samp.)	0.000 @ 10"
Meter Box	020	Static	+1.8	Final Leak (Pitot)	OK @ 4"
ΔH	1.71 | Y_1 1.01				OK @ 5"

POINT	TIME ACTUAL	RUN	METER	ΔP	Δh	STACK °F	PROBE °F	Filter °F	METER °F IN	OUT	EXIT °F	VAC
	742		830.406									
A 1		5	834.3	.62	1.6	117	318	320	78	76	65	6
2		10	838.2	.61	1.6	116	311	319	79	76	49	6
3	757	15	842.108	.58	1.5	117	320	320	80	76	45	6
	758		842.108									
B 1		20	845.8	.61	1.6	117	320	320	82	78	48	6
2		25	849.7	.61	1.6	117	310	320	84	79	46	6
3	813	30	853.481	.55	1.4	118	320	319	86	80	46	6
	815		853.481									
C 1		35	857.4	.62	1.6	118	319	318	88	82	53	6
2		40	861.2	.60	1.6	117	320	320	88	82	47	6
3	830	45	865.096	.56	1.5	118	320	320	89	83	47	6
	832		865.096									
D 1		50	869.0	.63	1.6	118	317	321	90	84	50	6
2		55	872.9	.61	1.6	117	321	320	92	84	48	6
3	847	60	876.811	.57	1.5	118	320	321	92	85	47	6

Operator: Tilley

Imp 1: 186 Imp 2: 134 Imp 3: 2 Gel: 260

Comments: K=2.6

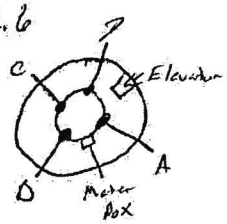

CAM-F-08

Page 1 of 1

Rev: 4, 7/31/13
R.Derrera

CATALYST AIR MANAGEMENT, INC. (865) 531-0075
Air Quality Testing Services (865) 531-0750 Fax
2505 Byington-Solway Road
Knoxville, TN 37931

PLANT: NGS DATE: 6/22/14
SAMPLING TIME: (24 HR CLOCK) 0742 - 0847
SAMPLING LOCATION: 1 Stack
SAMPLING TYPE: Continuous
ANALYTICAL METHOD: 3A/5B AMB. TEMP (°F) 84
TECHNICIAN: King / Which / Boys

DMW & Emission Data Sheet

Run 1

RUN / GAS	1		2		3		AVERAGE NET VOLUME	Fo (TEST) = 20.9 − %O2 / %CO2	
	ACTUAL READING	NET	ACTUAL READING	NET	ACTUAL READING	NET			
CO_2							13.2		
O_2 (NET IS ACTUAL MINUS ACTUAL CO_2)							6.9	Fuel Type COAL RESIDUAL FUEL OIL NATURAL GAS	Fo (calc) 1,260 1,716

SYSTEM LEAK CHECK ✓ NA method
INITIAL ORSAT ANALYZER LEAK CHECK (FLUID LEVEL) ____/____ BUBBLER ____
FINAL ORSAT ANALYZER LEAK CHECK (FLUID LEVEL) ____/____ BUBBLER ____

MOISTURE

	1	2	3	4	5	6	GEL	TOTALS
FINAL (ml)	186	134	2				260	
INITIAL (ml)	100	100	0				250	
NET (ml)	86	34	2				10	132
TOTALS								132

PARTICULATE CATCH

FILTER WEIGHTS

FILTER NO.	C3B 386			WEIGHED BY
FINAL WEIGHT	0.3660			RD
INITIAL WEIGHT	0.3601			
DIFFERENCE	0.0059			
PARTICULATE CATCH	5.9			

PROBE/NOZZLE WASH

BEAKER NO.	D9		Blank	WEIGHED BY
FINAL WEIGHT	106.9463		103.5902	RD
INITIAL WEIGHT	106.9423		103.5902	
DIFFERENCE	0.0040		0.0000	
PARTICULATE CATCH	4.0		0	

TOTAL PARTICULATE CATCH (mg) 9.9

CATALYST AIR MANAGEMENT, INC. (865) 531-0075
Air Quality Testing Services (865) 531-0750 Fax
2505 Byington Solway Road
Knoxville, TN 37931

Field Isokinetic Data Sheet

Client	SRP	Pitot No.	CAM 10-01	Filter Number	C3B-387
Plant	Navajo	Nozzle No.	CAM 203	Initial Leak (Samp.)	0.000 @ 10"
Location	Unit 1 Stack	Nozzle Dn.	.240	Initial Leak (Pitot)	OK @ 3"
Test	M5b	Stack TC No.	CAM P-14		OK @ 5"
Run	2	P_B	25.13		
Date	6-22-17	Ambient Temp	85°F	Final Leak (Samp.)	0.000 @ 11"
Meter Box	020	Static	+1.8	Final Leak (Pitot)	OK @ 4"
ΔH	1.71 | Y: 1.01				OK @ 5"

POINT	TIME ACTUAL	TIME RUN	METER	ΔP	Δh	STACK °F	PROBE °F	Filter °F	METER °F IN	METER °F OUT	EXIT °F	VAC
	907		877.016									
D 1		5	881.0	.63	1.6	117	311	320	90	86	65	5
2		10	884.9	.61	1.6	116	317	320	91	86	52	5
3	922	15	888.821	.58	1.5	116	321	318	93	87	61	5
	924		888.821									
C 1		20	892.7	.62	1.4	116	321	320	92	87	60	5
2		25	896.7	.61	1.6	115	318	319	93	90	58	5
3	939	30	900.615	.56	1.5	115	316	322	94	87	60	5
	940		900.615									
B 1		35	904.6	.61	1.6	115	311	319	94	88	64	5
2		40	908.4	.59	1.5	114	316	321	95	88	53	5
3	955	45	912.179	.55	1.4	116	320	320	95	88	51	5
	956		912.179									
A 1		50	916.1	.61	1.6	113	310	318	95	88	49	5
2		55	920.0	.60	1.6	114	315	320	96	89	47	5
3	1011	60	923.966	.56	1.5	113	318	321	96	89	50	5

Operator: D. King Imp 1: 196 Imp 2: 130 Imp 3: 2 Gel: 261

Comments: K = 2.6

CAM-F-08 Page 1 of 1 Rev: 4. 7/31/13 R.Derrera

CATALYST AIR MANAGEMENT, INC. (865) 531-0075
Air Quality Testing Services (865) 531-0750 Fax
2505 Byington-Solway Road
Knoxville, TN 37931

PLANT: NGS DATE: 6/22/14
SAMPLING TIME: (24 HR CLOCK) 0907 - 1011
SAMPLING LOCATION: 1 Stack
SAMPLING TYPE: Continuous
ANALYTICAL METHOD: 3A/5B AMB. TEMP (°F) 85
TECHNICIAN: Cj / Which / Boys

DMW & Emission Data Sheet

Run 2

RUN / GAS	1		2		3		AVERAGE NET VOLUME	$Fo\ (TEST) = \frac{20.9 - \%O_2}{\%CO_2}$	
	ACTUAL READING	NET	ACTUAL READING	NET	ACTUAL READING	NET			
CO_2							13.1		
O_2 (NET IS ACTUAL MINUS ACTUAL CO_2)							7.0	Fuel Type COAL RESIDUAL FUEL OIL NATURAL GAS	Fo (calc) 1.280 1.116

SYSTEM LEAK CHECK ok NA instrtl
INITIAL ORSAT ANALYZER LEAK CHECK (FLUID LEVEL) ____/____ BUBBLER ____
FINAL ORSAT ANALYZER LEAK CHECK (FLUID LEVEL) ____/____ BUBBLER ____

MOISTURE

	1	2	3	4	5	6	GEL	TOTALS
FINAL (ml)	196	130	2				261	
INITIAL (ml)	100	100	0				250	
NET (ml)	96	30	2				11	139
TOTALS								139

PARTICULATE CATCH

FILTER WEIGHTS

FILTER NO.	C3B 387			WEIGHED BY
FINAL WEIGHT	0.3668			RD
INITIAL WEIGHT	0.3593			
DIFFERENCE	0.0075			
PARTICULATE CATCH	7.5			

PROBE/NOZZLE WASH

BEAKER NO.	16		Blank	WEIGHED BY
FINAL WEIGHT	97.3045			CD
INITIAL WEIGHT	97.2999			
DIFFERENCE	0.0046			
PARTICULATE CATCH	4.6		6	

TOTAL PARTICULATE CATCH (mg) 12.1

CATALYST AIR MANAGEMENT, INC. (865) 531-0075
Air Quality Testing Services (865) 531-0750 Fax
2505 Byington Solway Road
Knoxville, TN 37931

Field Isokinetic Data Sheet

Client	SRP	Pitot No.	CAM 10-01	Filter Number	C38-388
Plant	Newnan	Nozzle No.	CAM 203	Initial Leak (Samp.)	0.000 @ 9"
Location	Unit 1 Stack	Nozzle Dn.	.240	Initial Leak (Pitot)	OK @ 3"
Test	M5b	Stack TC No.	CAM P-14		OK @ 4"
Run	3	P_B	25.13		
Date	6-22-14	Ambient Temp	84°F	Final Leak (Samp.)	0.000 @ 10"
Meter Box	020	Static	+1.7	Final Leak (Pitot)	OK @ 4"
ΔH	1.71 | Y, 1.01				OK @ 4"

POINT	TIME ACTUAL	TIME RUN	METER	ΔP	Δh	STACK °F	PROBE °F	Filter °F	METER °F IN	METER °F OUT	EXIT °F	VAC
	1035		924.904									
A 1		5	928.8	.63	1.6	118	319	318	93	91	59	5
2		10	932.8	.61	1.6	117	320	315	93	91	51	5
3	1050	15	936.682	.56	1.5	117	319	320	94	90	54	5
	1051		936.682									
B 1		20	940.6	.62	1.6	118	320	322	94	90	57	5
2		25	944.6	.60	1.6	118	320	322	95	90	55	5
3	1106	30	948.508	.57	1.5	117	320	320	96	93	51	5
	1107		948.508									
C 1		35	952.5	.64	1.7	117	320	322	95	90	54	5
2		40	956.5	.63	1.6	117	320	318	97	90	51	6
3	1122	45	960.454	.60	1.5	118	318	318	97	91	54	6
	1124		960.454									
D 1		50	964.4	.65	1.7	118	320	321	97	91	56	6
2		55	968.5	.63	1.6	120	321	317	98	91	53	6
3	1139	60	972.493	.60	1.5	121	320	315	99	91	56	6

Operator: D. King Imp 1: 198 Imp 2: 122 Imp 3: 2 Gel: 258

Comments: K = 2.6

CATALYST AIR MANAGEMENT, INC. (865) 531-0075
Air Quality Testing Services (865) 531-0750 Fax
2505 Byington-Solway Road
Knoxville, TN 37931

PLANT: NGS DATE: 6/22/14
SAMPLING TIME: (24 HR CLOCK) 1035 - 1139
SAMPLING LOCATION: 1 Stack
SAMPLING TYPE: Continuous
ANALYTICAL METHOD: 3A / 5D AMB. TEMP (°F) 84
TECHNICIAN: Kig / White / Boys

DMW & Emission Data Sheet

Run 3

RUN / GAS	1		2		3		AVERAGE NET VOLUME	Fo (TEST) = $\frac{20.9-\%O_2}{\%CO_2}$	
	ACTUAL READING	NET	ACTUAL READING	NET	ACTUAL READING	NET			
CO_2							13.0		
O_2 (NET IS ACTUAL MINUS ACTUAL CO_2)							7.0	Fuel Type: COAL, RESIDUAL FUEL OIL, NATURAL GAS	Fo (calc): 1.280, 1.116

SYSTEM LEAK CHECK ok NA restart
INITIAL ORSAT ANALYZER LEAK CHECK (FLUID LEVEL) ____/____ BUBBLER ____
FINAL ORSAT ANALYZER LEAK CHECK (FLUID LEVEL) ____/____ BUBBLER ____

MOISTURE

	1	2	3	4	5	6	GEL	TOTALS
FINAL (ml)	198	122	2				258	
INITIAL (ml)	100	100	0				250	
NET (ml)	98	22	2				8	130
TOTALS								130

PARTICULATE CATCH

FILTER WEIGHTS

FILTER NO.	63B 388			WEIGHED BY
FINAL WEIGHT	0.3649			RD
INITIAL WEIGHT	0.3597			
DIFFERENCE	0.0052			
PARTICULATE CATCH	5.2			

PROBE/NOZZLE WASH

BEAKER NO.	11		Blank	WEIGHED BY
FINAL WEIGHT	108.6354			RD
INITIAL WEIGHT	108.6282			
DIFFERENCE	0.0072			
PARTICULATE CATCH	7.2		0	

TOTAL PARTICULATE CATCH (mg) 12.4

Unit 2

Particulate Matter Determination Spreadsheet

Client: **Salt River Project**
Unit Tested: **Navajo 2**
Sampling Location: **Stack**
Run No: **1**

Date: 6/24/14
Start Time: 7:29
End Time: 8:34

Diameter of Nozzle: 0.240 inches
Area of Nozzle (An): 3.14E-04 sq. ft.
Barometric Pressure (Pbar): 25.17 in. Hg
Gas Meter Factor (Y): 1.01
Total Sample Time: 60.00 min
Number of Sample Points: 12

Stack Diameter: 417 inches
Area of Stack (As): 948.4 sq. ft.
Pitot Coefficient (Cp): 0.84
Volume of Moisture (Vlc): 130.0 ml
% CO2: 12.5 %
% O2: 7.6 %

Point ID	Clock Time	Time	Meter Volume	Delta P	Delta H	Dry Gas Meter Temp In	Dry Gas Meter Temp Out	Stack Temp	Static Pressure	SDE	VEL
	7:29	0.0	551.445								
A-1		5.0	555.8	0.72	1.90	82	80	115		20.35	54.2
2		10.0	560.0	0.70	1.80	83	80	116	2.10	20.08	53.5
3	7:44	15.0	564.025	0.60	1.60	84	80	116		18.59	49.5
	7:46		564.025								
B-1		20.0	568.2	0.70	1.80	85	81	115		20.06	53.4
2		25.0	572.5	0.76	2.00	85	81	115		20.85	55.5
3	8:01	30.0	576.402	0.59	1.50	87	82	114		18.40	49.0
	8:03		576.402								
C-1		35.0	580.6	0.73	1.90	88	82	114		20.47	54.5
2		40.0	584.8	0.70	1.80	89	82	114		20.04	53.4
3	8:18	45.0	588.937	0.66	1.70	90	84	116		19.50	51.9
	8:19		588.937								
D-1		50.0	593.3	0.77	2.00	90	84	115		21.04	56.0
2		55.0	597.5	0.71	1.80	92	85	116		20.22	53.8
3	8:34	60.0	601.688	0.64	1.70	92	85	116		19.20	51.1
RESULTS		TT	VM	SQ RT PIT	PM		TM	TS	STATIC	SDE	VEL
		60.0	50.243	0.830	1.792		85	115	2.10		
		net	net	avg	avg		avg	avg	avg	avg	ft/sec

Ps: 25.32 in. Hg
Bws: 0.1284

Vm(std): 41.580 cf
Md: 30.30 lb/lmol

Vw(std): 6.123 cf
Ms: 28.72 lb/lmol

%H20: 12.84 %
%EA: 56.32 %

Stack Gas Velocity (Vs): 53.0 ft/sec
Stack Gas Velocity (Vs): 3,179.2 ft/min
Stack Gas Flow Rate (Qstd): 2,042,093 DSCFM
Stack Gas Flow Rate (Qa): 3,015,220 ACFM
Isokinectic Ratio (I): **102.5** %

Weight Collected: 21.4 mg
PM Concentration: 15.04 mg/ACM
PM Concentration: 0.008 grains/dscf
Fd - Emission Rate: 0.017 lb/mmBtu
Fc - Emission Rate: 0.016 lb/mmBtu
PM Concentration: **9.15** mg/ACM @160C (wet)

Particulate Matter Determination Spreadsheet

Client: **Salt River Project**
Unit Tested: **Navajo 2**
Sampling Location: **Stack**
Run No: **2**

Date: 6/24/14
Start Time: 9:53
End Time: 10:57

Diameter of Nozzle: 0.240 inches
Area of Nozzle (An): 3.14E-04 sq. ft.
Barometric Pressure (Pbar): 25.17 in. Hg
Gas Meter Factor (Y): 1.01
Total Sample Time: 60.00 min
Number of Sample Points: 12

Stack Diameter: 417 inches
Area of Stack (As): 948.4 sq. ft.
Pitot Coefficient (Cp): 0.84
Volume of Moisture (Vlc): 135.0 ml
% CO2: 13.0 %
% O2: 7.2 %

Point ID	Clock Time	Time	Meter Volume	Delta P	Delta H	Dry Gas Meter Temp In	Dry Gas Meter Temp Out	Stack Temp	Static Pressure	SDE	VEL
	9:53	0.0	601.908								
D-1		5.0	606.4	0.80	2.10	88	86	122		21.58	57.4
2		10.0	610.8	0.76	2.00	88	86	119	2.00	20.98	55.8
3	10:08	15.0	615.060	0.70	1.80	88	86	118		20.11	53.6
	10:09		615.060								
C-1		20.0	619.5	0.78	2.00	89	86	118		21.23	56.5
2		25.0	623.8	0.75	2.00	89	86	118		20.82	55.4
3	10:24	30.0	628.079	0.68	1.80	90	86	118		19.83	52.8
	10:25		628.079								
B-1		35.0	632.3	0.72	1.90	90	86	118		20.40	54.3
2		40.0	637.0	0.68	1.80	90	86	118		19.83	52.8
3	10:40	45.0	640.545	0.61	1.60	91	86	118		18.78	50.0
	10:42		640.545								
A-1		50.0	644.7	0.70	1.80	90	86	118		20.11	53.6
2		55.0	648.7	0.66	1.70	90	86	119		19.55	52.0
3	10:57	60.0	652.721	0.60	1.60	91	86	118		18.62	49.6
RESULTS		TT	VM		PM		TM	TS	STATIC	SDE	VEL
		60.0	50.813	0.838	1.842		88	119	2.00		
		net	net	avg	avg		avg	avg	avg	avg	ft/sec

Ps: 25.32 in. Hg
Bws: 0.1320

Vm(std): 41.824 cf
Md: 30.37 lb/lmol

Vw(std): 6.359 cf
Ms: 28.74 lb/lmol

%H20: 13.20 %
%EA: 51.92 %

Stack Gas Velocity (Vs): 53.7 ft/sec
Stack Gas Velocity (Vs): 3,219.3 ft/min
Stack Gas Flow Rate (Qstd): 2,046,809 DSCFM
Stack Gas Flow Rate (Qa): 3,053,225 ACFM
Isokinectic Ratio (I): **102.9** %

Weight Collected: **18.2** mg
PM Concentration: 12.65 mg/ACM
PM Concentration: 0.007 grains/dscf
Fd - Emission Rate: 0.014 lb/mmBtu
Fc - Emission Rate: 0.013 lb/mmBtu
PM Concentration: **7.71** mg/ACM @160C (wet)

Particulate Matter Determination Spreadsheet

Client: **Salt River Project**
Unit Tested: **Navajo 2**
Sampling Location: **Stack**
Run No: **3**

Date: 6/24/14
Start Time: 11:09
End Time: 12:13

Diameter of Nozzle: 0.240 inches
Area of Nozzle (An): 3.14E-04 sq. ft.
Barometric Pressure (Pbar): 25.17 in. Hg
Gas Meter Factor (Y): 1.01
Total Sample Time: 60.00 min
Number of Sample Points: 12

Stack Diameter: 417 inches
Area of Stack (As): 948.4 sq. ft.
Pitot Coefficient (Cp): 0.84
Volume of Moisture (Vlc): 128.0 ml
% CO2: 12.1 %
% O2: 8.0 %

Point ID	Clock Time	Time	Meter Volume	Delta P	Delta H	Dry Gas Meter Temp In	Dry Gas Meter Temp Out	Stack Temp	Static Pressure	SDE	VEL
	11:09	0.0	652.907								
A-1		5.0	651.1	0.68	1.80	89	86	116		19.79	52.8
2		10.0	661.1	0.65	1.70	90	87	117	2.00	19.37	51.7
3	11:24	15.0	664.850	0.53	1.40	91	87	116		17.47	46.6
	11:25		664.850								
B-1		20.0	668.8	0.65	1.70	92	87	117		19.37	51.7
2		25.0	672.8	0.63	1.60	93	87	116		19.05	50.8
3	11:40	30.0	676.586	0.55	1.40	94	88	116		17.80	47.5
	11:41		676.586								
C-1		35.0	680.7	0.70	1.80	94	89	116		20.08	53.6
2		40.0	684.9	0.68	1.80	96	89	117		19.81	52.8
3	11:56	45.0	688.924	0.60	1.60	97	90	116		18.59	49.6
	11:58		688.924								
D-1		50.0	693.1	0.74	1.90	97	91	117		20.66	55.1
2		55.0	697.2	0.66	1.70	97	91	116		19.50	52.0
3	12:13	60.0	701.258	0.60	1.60	98	91	116		18.59	49.6
RESULTS		TT	VM	SQ RT PIT	PM		TM	TS	STATIC	SDE	VEL
		60.0	48.351	0.799	1.667		91	116	2.00		
		net	net	avg	avg		avg	avg	avg	avg	ft/sec

Ps: 25.32 in. Hg
Bws: 0.1324

Vm(std): 39.522 cf
Md: 30.26 lb/lmol

Vw(std): 6.029 cf
Ms: 28.63 lb/lmol

%H20: 13.24 %
%EA: 61.10 %

Stack Gas Velocity (Vs): 51.1 ft/sec
Stack Gas Velocity (Vs): 3,068.2 ft/min
Stack Gas Flow Rate (Qstd): 1,957,198 DSCFM
Stack Gas Flow Rate (Qa): 2,909,915 ACFM
Isokinectic Ratio (I): **101.7** %

Weight Collected: **16.3** mg
PM Concentration: 11.90 mg/ACM
PM Concentration: 0.006 grains/dscf
Fd - Emission Rate: 0.014 lb/mmBtu
Fc - Emission Rate: 0.013 lb/mmBtu
PM Concentration: **7.30** mg/ACM @160C (wet)

CATALYST AIR MANAGEMENT, INC.
Air Quality Testing Services
2505 Byington Solway Road
Knoxville, TN 37931
(865) 531-0075
(865) 531-0750 Fax

Field Isokinetic Data Sheet

Client	SRP	Pitot No.	CAM 423	Filter Number	C3B-401
Plant	Navajo	Nozzle No.	CAM 203	Initial Leak (Samp.)	0.000 @ 8"
Location	Unit 2 Stack	Nozzle Dn.	.240	Initial Leak (Pitot)	OK @ 3"
Test	M5b	Stack TC No.	CAM 30		OK @ 5"
Run	1	P_B	25.17		
Date	6-24-14	Ambient Temp	80 °F	Final Leak (Samp.)	0.000 @ 10
Meter Box	020	Static	+2.1	Final Leak (Pitot)	OK @ 4"
ΔH	1.71 | Y_I 1.01				OK @ 4"

POINT	TIME ACTUAL	RUN	METER	ΔP	Δh	STACK °F	PROBE °F	Filter °F	METER °F IN	METER °F OUT	EXIT °F	VAC
	729		551.445									
A 1		5	555.8	.72	1.9	115	316	322	82	80	60	4
2		10	560.0	.70	1.8	116	311	319	83	80	53	4
3	744	15	564.025	.60	1.6	116	311	320	84	80	50	4
	746		564.025									
B 1		20	568.2	.70	1.8	115	317	321	85	81	49	4
2		25	572.5	.75	2.0	115	316	318	85	81	49	5
3	801	30	576.402	.59	1.5	114	314	322	87	82	49	5
	803		576.402									
C 1		35	~~580.8~~ 580.6	.73	1.9	114	310	324	88	82	51	5
2		40	584.8	.70	1.8	114	315	323	89	82	49	5
3	818	45	588.937	.66	1.7	116	312	320	90	84	51	5
	819		588.937									
D 1		50	593.3	.77	2.0	115	318	319	90	84	56	5
2		55	597.5	.71	1.8	116	312	319	92	85	51	5
3	834	60	601.688	.64	1.7	116	313	321	92	85	53	5

Operator: T. King

Imp 1: 196 Imp 2: 126 Imp 3: 2 Gel: 256

Comments: K = 2.6

CAM-F-08

Page 1 of 1

Rev: 4. 7/31/13
R.Derrera

CATALYST AIR MANAGEMENT, INC. (865) 531-0075
Air Quality Testing Services (865) 531-0750 Fax
2505 Byington-Solway Road
Knoxville, TN 37931

PLANT: NGS DATE: 6/24/14
SAMPLING TIME: (24 HR CLOCK) 0729 - 0834
SAMPLING LOCATION: 2 Stack
SAMPLING TYPE: Continuous
ANALYTICAL METHOD: 3A/5B AMB. TEMP (°F) 80
TECHNICIAN: Kig / Which / Boys

DMW & Emission Data Sheet

Run 1

RUN / GAS	1		2		3		AVERAGE NET VOLUME	Fo (TEST) = $\frac{20.9 - \%O_2}{\%CO_2}$	
	ACTUAL READING	NET	ACTUAL READING	NET	ACTUAL READING	NET			
CO_2							12.5		
O_2 (NET IS ACTUAL MINUS ACTUAL CO_2)							7.6	Fuel Type COAL RESIDUAL FUEL OIL NATURAL GAS	Fo (calc) 1.280 1.716

SYSTEM LEAK CHECK ok
INITIAL ORSAT ANALYZER LEAK CHECK (FLUID LEVEL) NA, wetted / BUBBLER
FINAL ORSAT ANALYZER LEAK CHECK (FLUID LEVEL) / BUBBLER

MOISTURE

	1	2	3	4	5	6	GEL	TOTALS
FINAL (ml)	196	126	2				256	
INITIAL (ml)	100	100	0				250	
NET (ml)	96	26	2				6	130
TOTALS								130

PARTICULATE CATCH

FILTER WEIGHTS

FILTER NO.	C3B-401			WEIGHED BY
FINAL WEIGHT	0.3696			RD
INITIAL WEIGHT	0.3573			
DIFFERENCE	0.0123			
PARTICULATE CATCH	12.3			

PROBE/NOZZLE WASH

BEAKER NO.	DZ		Blank	WEIGHED BY
FINAL WEIGHT	109.3882		103.5902	RD
INITIAL WEIGHT	109.3791		103.5902	
DIFFERENCE	0.0091		0.0000	
PARTICULATE CATCH	9.1		0	

TOTAL PARTICULATE CATCH (mg) 21.4

CATALYST AIR MANAGEMENT, INC. (865) 531-0075
Air Quality Testing Services (865) 531-0750 Fax
2505 Byington Solway Road
Knoxville, TN 37931

Field Isokinetic Data Sheet

Client	SRP	Pitot No.	CAM 10-01	Filter Number	C3B-402
Plant	Navajo	Nozzle No.	CAM 203	Initial Leak (Samp.)	0.000 @ 8"
Location	Unit 2 Stack	Nozzle Dn.	.240	Initial Leak (Pitot)	OK @ 4"
Test	M5b	Stack TC No.	CAM P14		OK @ 4"
Run	2	P_B	25.17		
Date	6-24-14	Ambient Temp	80 °F	Final Leak (Samp.)	0.000 @ 10"
Meter Box	020	Static	+2.0	Final Leak (Pitot)	OK @ 5"
ΔH	1.71 | Y₁ 1.01				OK @ 5"

POINT	TIME ACTUAL	TIME RUN	METER	ΔP	Δh	STACK °F	PROBE °F	Filter °F	METER °F IN	METER °F OUT	EXIT °F	VAC
	953		601.908									
D 1		5	606.4	.80	2.1	122	319	316	88	86	65	5
2		10	610.8	.76	2.0	119	320	320	88	86	62	5
3	1008	15	615.060	.70	1.8	118	320	322	88	86	63	5
	1009		615.060									
C 1		20	619.5	.78	2.0	118	321	316	89	86	66	5
2		25	623.8	.75	2.0	118	319	320	89	86	55	5
3	1024	30	628.079	.68	1.8	118	320	319	90	86	57	5
	1025		628.079									
B 1		35	632.3	.72	1.9	118	321	319	90	86	58	5
2		40	637.0	.68	1.8	118	319	322	90	86	55	5
3	1040	45	640.545	.61	1.6	118	319	315	91	86	54	5
	1042		640.545									
A 1		50	644.7	.70	1.8	118	320	321	90	86	55	5
2		55	648.7	.66	1.7	119	320	315	90	86	54	5
3	1057	60	652.721	.60	1.6	118	320	323	91	86	58	5

Operator: D. Kirby Imp 1: 200 Imp 2: 126 Imp 3: 2 Gel: 257

Comments: K-26

CATALYST AIR MANAGEMENT, INC. (865) 531-0075
Air Quality Testing Services (865) 531-0750 Fax
2505 Byington-Solway Road
Knoxville, TN 37931

PLANT: NGS DATE: 6/24/14
SAMPLING TIME: (24 HR CLOCK) 0953 - 1057
SAMPLING LOCATION: 2
SAMPLING TYPE: Continuous
ANALYTICAL METHOD: 3A/5B AMB. TEMP (°F) 80
TECHNICIAN: Kij Tuhuit / Boyd

DMW & Emission Data Sheet

Run 2

RUN / GAS	1		2		3		AVERAGE NET VOLUME	Fo (TEST) = $\frac{20.9 - \%O_2}{\%CO_2}$	
	ACTUAL READING	NET	ACTUAL READING	NET	ACTUAL READING	NET			
CO_2							13.0		
O_2 (NET IS ACTUAL MINUS ACTUAL CO_2)							7.2	Fuel Type COAL RESIDUAL FUEL OIL NATURAL GAS	Fo (calc) 1.280 1.716

SYSTEM LEAK CHECK ok
INITIAL ORSAT ANALYZER LEAK CHECK (FLUID LEVEL) NA natural / BUBBLER
FINAL ORSAT ANALYZER LEAK CHECK (FLUID LEVEL) / BUBBLER

MOISTURE

	1	2	3	4	5	6	GEL	TOTALS
FINAL (ml)	200	126	2				257	
INITIAL (ml)	100	100	0				250	
NET (ml)	100	26	2				7	135
TOTALS								135

PARTICULATE CATCH

FILTER WEIGHTS

FILTER NO.	C3B-402			WEIGHED BY
FINAL WEIGHT	~~0.3701~~	0.3701		RD
INITIAL WEIGHT	~~0.3573~~	0.3573		
DIFFERENCE	~~0.0128~~	0.0128		
PARTICULATE CATCH	~~12.8~~	12.8		

PROBE/NOZZLE WASH

BEAKER NO.	07		Blank	WEIGHED BY
FINAL WEIGHT	103.8103			RD
INITIAL WEIGHT	103.8049			
DIFFERENCE	0.0054			
PARTICULATE CATCH	5.4		0	

TOTAL PARTICULATE CATCH (mg) 18.2

CATALYST AIR MANAGEMENT, INC. (865) 531-0075
Air Quality Testing Services (865) 531-0750 Fax
2505 Byington Solway Road
Knoxville, TN 37931

Field Isokinetic Data Sheet

Client	SRP	Pitot No.	CAM 22	Filter Number	C3D-403
Plant	Navajo	Nozzle No.	CAM 203	Initial Leak (Samp.)	0.000 @ 7"
Location	Unit 2 Stack	Nozzle Dn.	.240	Initial Leak (Pitot)	OK @ 3"
Test	M5b	Stack TC No.	CAM 30		OK @ 3"
Run	3	P_B	25.17		
Date	6-24-14	Ambient Temp	81 °F	Final Leak (Samp.)	0.000 @ 10"
Meter Box	020	Static	+2.0	Final Leak (Pitot)	OK @ 5"
ΔH	1.71 | Y: 1.01				OK @ 5"

POINT	TIME ACTUAL	RUN	METER	ΔP	Δh	STACK °F	PROBE °F	Filter °F	METER °F IN	METER °F OUT	EXIT °F	VAC
	1101		652.907									
A 1		5	657.1	.68	1.8	116	319	317	89	86	66	5
2		10	661.1	.65	1.7	117	314	313	90	87	63	5
3	1124	15	664.850	.53	1.4	116	319	320	91	87	57	5
	1125		664.850									
B 1		20	668.8	.65	1.7	117	318	315	92	87	55	5
2		25	672.8	.63	1.6	116	316	320	93	87	53	5
3	1140	30	676.586	.55	1.4	116	310	321	94	88	53	5
	1141		676.586									
C 1		35	680.7	.70	1.8	116	309	319	94	89	56	5
2		40	684.9	.68	1.8	117	316	317	96	89	53	5
3	1156	45	688.924	.60	1.6	116	311	320	97	90	52	5
	1158		688.924									
D 1		50	693.1	.74	1.9	117	318	322	97	91	54	5
2		55	697.2	.66	1.7	116	312	320	97	91	52	5
3	1213	60	701.258	.60	1.6	116	312	321	98	91	54	5

Operator: D.Kay Imp 1: 198 Imp 2: 124 Imp 3: 2 Gel: 254

Comments: K=2.6

CAM-F-08 Page 1 of 1 Rev: 4. 7/31/13 R.Derrera

CATALYST AIR MANAGEMENT, INC. (865) 531-0075
Air Quality Testing Services (865) 531-0750 Fax
2505 Byington-Solway Road
Knoxville, TN 37931

PLANT: NGS DATE: 6/24/14
SAMPLING TIME: (24 HR CLOCK) 1109 - 1213
SAMPLING LOCATION: 2
SAMPLING TYPE: Continuous
ANALYTICAL METHOD: 3A/5B AMB. TEMP (°F) 81
TECHNICIAN: Kij / Whick / Boys

DMW & Emission Data Sheet

Run 3

RUN / GAS	1		2		3		AVERAGE NET VOLUME	Fo (TEST) = $\frac{20.9-\%O_2}{\%CO2}$	
	ACTUAL READING	NET	ACTUAL READING	NET	ACTUAL READING	NET			
CO_2							12.1		
O_2 (NET IS ACTUAL MINUS ACTUAL CO_2)							8.0	Fuel Type COAL RESIDUAL FUEL OIL NATURAL GAS	Fo (calc) 1.266 1.718

SYSTEM LEAK CHECK ok NA initial
INITIAL ORSAT ANALYZER LEAK CHECK (FLUID LEVEL) ____/____ BUBBLER ____
FINAL ORSAT ANALYZER LEAK CHECK (FLUID LEVEL) ____/____ BUBBLER ____

MOISTURE

	1	2	3	4	5	6	GEL	TOTALS
FINAL (ml)	198	124	2				254	
INITIAL (ml)	100	100	0				250	
NET (ml)	98	24	2				4	128
TOTALS								128

PARTICULATE CATCH

FILTER WEIGHTS

FILTER NO.	C3B-403			WEIGHED BY
FINAL WEIGHT	0.3672			RD
INITIAL WEIGHT	0.3567			
DIFFERENCE	0.0105			
PARTICULATE CATCH	10.5			

PROBE/NOZZLE WASH

BEAKER NO.	21		Blank	WEIGHED BY
FINAL WEIGHT	97.5670			RD
INITIAL WEIGHT	97.5612			
DIFFERENCE	0.0058			
PARTICULATE CATCH	5.8		0	

TOTAL PARTICULATE CATCH (mg) 16.3

CATALYST AIR MANAGEMENT Inc.
O2/CO2 DATA

Run 1 DATE	TIME	O2	CO2
6/24/2014	7:32	7.84	12.37
6/24/2014	7:33	7.49	12.5
6/24/2014	7:34	7.45	12.59
6/24/2014	7:35	7.44	12.53
6/24/2014	7:36	7.5	12.45
6/24/2014	7:37	7.44	12.64
6/24/2014	7:38	7.24	12.7
6/24/2014	7:39	7.32	12.7
6/24/2014	7:40	7.37	12.55
6/24/2014	7:41	7.48	12.53
6/24/2014	7:42	7.5	12.55
6/24/2014	7:43	7.47	12.49
6/24/2014	7:44	7.56	12.48
6/24/2014	7:49	7.56	12.55
6/24/2014	7:50	7.52	12.6
6/24/2014	7:51	7.55	12.49
6/24/2014	7:52	7.65	12.44
6/24/2014	7:53	7.66	12.51
6/24/2014	7:54	7.64	12.51
6/24/2014	7:55	7.63	12.53
6/24/2014	7:56	7.61	12.54
6/24/2014	7:57	7.57	12.51
6/24/2014	7:58	7.71	12.47
6/24/2014	7:59	7.61	12.56
6/24/2014	8:00	7.58	12.57
6/24/2014	8:01	7.6	12.61
6/24/2014	8:05	7.63	12.56
6/24/2014	8:06	7.6	12.59
6/24/2014	8:07	7.56	12.65
6/24/2014	8:08	7.55	12.67
6/24/2014	8:09	7.63	12.59
6/24/2014	8:10	7.68	12.57
6/24/2014	8:11	7.63	12.58
6/24/2014	8:12	7.6	12.53
6/24/2014	8:13	7.68	12.53
6/24/2014	8:14	7.59	12.61
6/24/2014	8:15	7.55	12.63
6/24/2014	8:16	7.66	12.53
6/24/2014	8:17	7.62	12.58
6/24/2014	8:18	7.64	12.55
6/24/2014	8:21	7.86	12.5
6/24/2014	8:22	7.67	12.56
6/24/2014	8:23	7.71	12.54
6/24/2014	8:24	7.69	12.49
6/24/2014	8:25	7.75	12.49
6/24/2014	8:26	7.61	12.61
6/24/2014	8:27	7.5	12.7
6/24/2014	8:28	7.56	12.65
6/24/2014	8:29	7.51	12.63
6/24/2014	8:30	7.67	12.52
6/24/2014	8:31	7.67	12.53
6/24/2014	8:32	7.66	12.49
6/24/2014	8:33	7.78	12.43
6/24/2014	8:34	7.8	12.38
		7.59	**12.55**

Run 2 DATE	TIME	O2	CO2
6/24/2014	9:56	7.39	12.84
6/24/2014	9:57	7.19	13
6/24/2014	9:58	7.04	13.13
6/24/2014	9:59	6.93	13.18
6/24/2014	10:00	7.15	12.88
6/24/2014	10:01	7.37	12.76
6/24/2014	10:02	7.37	12.78
6/24/2014	10:03	7.35	12.83
6/24/2014	10:04	7.16	12.97
6/24/2014	10:05	7.11	13.01
6/24/2014	10:06	6.99	13.09
6/24/2014	10:07	6.94	13.09
6/24/2014	10:08	7.2	12.78
6/24/2014	10:12	7.28	12.84
6/24/2014	10:13	7.21	12.9
6/24/2014	10:14	7.15	12.94
6/24/2014	10:15	7.13	12.97
6/24/2014	10:16	7.1	13.01
6/24/2014	10:17	6.97	13.09
6/24/2014	10:18	7.15	12.92
6/24/2014	10:19	7.18	12.88
6/24/2014	10:20	7.25	12.82
6/24/2014	10:21	7.35	12.78
6/24/2014	10:22	7.26	12.92
6/24/2014	10:23	7.12	13.02
6/24/2014	10:24	7.1	13.01
6/24/2014	10:28	7.08	13.11
6/24/2014	10:29	6.99	13.12
6/24/2014	10:30	6.97	13.16
6/24/2014	10:31	6.98	13.08
6/24/2014	10:32	7.17	12.91
6/24/2014	10:33	7.18	12.95
6/24/2014	10:34	7.17	12.96
6/24/2014	10:35	7.07	13.1
6/24/2014	10:36	7.09	12.97
6/24/2014	10:37	7.09	12.97
6/24/2014	10:38	7.14	13.02
6/24/2014	10:39	6.97	13.13
6/24/2014	10:40	6.98	13.15
6/24/2014	10:44	7.34	13.01
6/24/2014	10:45	7.1	13.04
6/24/2014	10:46	7.15	13.03
6/24/2014	10:47	7.12	13.1
6/24/2014	10:48	6.95	13.16
6/24/2014	10:49	7.06	13.1
6/24/2014	10:50	7.05	13.14
6/24/2014	10:51	7.07	13.1
6/24/2014	10:52	7.08	13.05
6/24/2014	10:53	7.11	13.04
6/24/2014	10:54	7.18	13.01
6/24/2014	10:55	7.09	13.04
6/24/2014	10:56	7.07	13.1
		7.13	**13.00**

Run 3 DATE	TIME	O2	CO2
6/24/2014	11:12	8.42	11.87
6/24/2014	11:13	8.3	11.89
6/24/2014	11:14	8.27	11.92
6/24/2014	11:15	8.29	11.92
6/24/2014	11:16	8.19	12.04
6/24/2014	11:17	8.08	12.08
6/24/2014	11:18	7.93	12.23
6/24/2014	11:19	7.88	12.21
6/24/2014	11:20	7.95	12.13
6/24/2014	11:21	8.05	12.13
6/24/2014	11:22	7.94	12.17
6/24/2014	11:23	8	12.17
6/24/2014	11:24	7.99	12.18
6/24/2014	11:27	8.38	12.12
6/24/2014	11:28	8.04	12.14
6/24/2014	11:29	8.06	12.08
6/24/2014	11:30	8.07	12.08
6/24/2014	11:31	7.98	12.2
6/24/2014	11:32	7.88	12.27
6/24/2014	11:33	7.89	12.22
6/24/2014	11:34	7.88	12.28
6/24/2014	11:35	7.81	12.37
6/24/2014	11:36	7.86	12.18
6/24/2014	11:37	8.06	12.15
6/24/2014	11:38	7.89	12.29
6/24/2014	11:39	7.88	12.21
6/24/2014	11:40	8.03	12.15
6/24/2014	11:44	8.04	12.13
6/24/2014	11:45	8.1	12.09
6/24/2014	11:46	8.07	12.16
6/24/2014	11:47	8.01	12.19
6/24/2014	11:48	8.03	12.22
6/24/2014	11:49	7.88	12.29
6/24/2014	11:50	7.87	12.24
6/24/2014	11:51	7.99	12.16
6/24/2014	11:52	7.92	12.28
6/24/2014	11:53	7.8	12.33
6/24/2014	11:54	7.8	12.3
6/24/2014	11:55	7.91	12.23
6/24/2014	11:56	7.95	12.24
6/24/2014	12:00	8.18	11.97
6/24/2014	12:01	8.17	12.13
6/24/2014	12:02	7.93	12.25
6/24/2014	12:03	7.89	12.29
6/24/2014	12:04	7.86	12.3
6/24/2014	12:05	7.84	12.35
6/24/2014	12:06	7.84	12.37
6/24/2014	12:07	7.73	12.35
6/24/2014	12:08	7.93	12.14
6/24/2014	12:09	8	12.21
6/24/2014	12:10	7.95	12.18
6/24/2014	12:11	8.01	12.1
6/24/2014	12:12	8.05	12.16
6/24/2014	12:13	8.04	12.07
		8.00	**12.17**

RUN		1	2	3
IMP	1	100.0	100.0	100.0
		196.0	200.0	198.0
		96.0	100.0	98.0
IMP	2	100.0	100.0	100.0
		126.0	126.0	124.0
		26.0	26.0	24.0
IMP	3	0.0	0.0	0.0
		2.0	2.0	2.0
		2.0	2.0	2.0
	Gel	250.0	250.0	250.0
		256.0	257.0	254.0
		6.0	7.0	4.0
TOTAL		**130.0**	**135.0**	**128.0**

Unit 3

Particulate Matter Determination Spreadsheet

Client: **Salt River Project**
Unit Tested: **Navajo 3**
Sampling Location: **Stack**
Run No: **1**

Date: 6/11/14
Start Time: 10:20
End Time: 12:26

Diameter of Nozzle: 0.240 inches
Area of Nozzle (An): 3.14E-04 sq. ft.
Barometric Pressure (Pbar): 25.07 in. Hg
Gas Meter Factor (Y): 1.01
Total Sample Time: 120.00 min
Number of Sample Points: 12

Stack Diameter: 417 inches
Area of Stack (As): 948.4 sq. ft.
Pitot Coefficient (Cp): 0.84
Volume of Moisture (Vlc): 291.0 ml
% CO2: 13.2 %
% O2: 6.4 %

Point ID	Clock Time	Time	Meter Volume	Delta P	Delta H	Dry Gas Meter Temp In	Dry Gas Meter Temp Out	Stack Temp	Static Pressure	SDE	VEL
	10:20	0.0	181.304								
A-1		10.0	1490.0	0.68	1.90	85	82	117		19.81	53.0
2		20.0	198.6	0.68	1.90	86	82	116	1.40	19.79	52.9
3	10:50	30.0	206.721	0.56	1.60	89	83	116		17.96	48.0
	10:52		206.721								
B-1		40.0	215.5	0.70	2.00	89	83	116		20.08	53.7
2		50.0	224.3	0.70	2.00	91	85	116		20.08	53.7
3	11:22	60.0	232.564	0.60	1.70	92	85	116		18.59	49.7
	11:24		232.564								
C-1		70.0	241.3	0.69	1.90	94	88	117		19.95	53.4
2		80.0	249.8	0.66	1.80	95	88	116		19.50	52.2
3	11:54	90.0	258.161	0.62	1.70	96	90	116		18.90	50.6
	11:56		258.161								
D-1		100.0	266.8	0.68	1.90	96	90	115		19.77	52.9
2		110.0	275.3	0.65	1.80	95	90	116		19.35	51.8
3	12:26	120.0	283.220	0.55	1.50	95	90	116		17.80	47.6
RESULTS		TT	VM	SQ RT PIT	PM		TM	TS	STATIC	SDE	VEL
		120.0	101.916	0.804	1.808		89	116	1.40		
		net	net	avg	avg		avg	avg	avg	avg	ft/sec

Ps: 25.17 in. Hg
Bws: 0.1412

Vm(std): 83.338 cf
Md: 30.37 lb/lmol

Vw(std): 13.706 cf
Ms: 28.62 lb/lmol

%H20: 14.12 %
%EA: 43.17 %

Stack Gas Velocity (Vs): 51.6 ft/sec
Stack Gas Velocity (Vs): 3,097.8 ft/min
Stack Gas Flow Rate (Qstd): 1,945,571 DSCFM
Stack Gas Flow Rate (Qa): 2,938,003 ACFM
Isokinectic Ratio (I): **107.8** %

Weight Collected: **34.4** mg
PM Concentration: 11.92 mg/ACM
PM Concentration: 0.006 grains/dscf
Fd - Emission Rate: 0.013 lb/mmBtu
Fc - Emission Rate: 0.012 lb/mmBtu
PM Concentration: **7.21** mg/ACM @160C (wet)

Particulate Matter Determination Spreadsheet

Client: **Salt River Project**
Unit Tested: **Navajo 3**
Sampling Location: **Stack**
Run No: **2**

Date: 6/11/14
Start Time: 13:02
End Time: 15:08

Diameter of Nozzle: 0.240 inches
Area of Nozzle (An): 3.14E-04 sq. ft.
Barometric Pressure (Pbar): 25.07 in. Hg
Gas Meter Factor (Y): 1.01
Total Sample Time: 120.00 min
Number of Sample Points: 12

Stack Diameter: 417 inches
Area of Stack (As): 948.4 sq. ft.
Pitot Coefficient (Cp): 0.84
Volume of Moisture (Vlc): 284.0 ml
% CO2: 13.2 %
% O2: 6.5 %

Point ID	Clock Time	Time	Meter Volume	Delta P	Delta H	Dry Gas Meter Temp In	Dry Gas Meter Temp Out	Stack Temp	Static Pressure	SDE	VEL
	13:02	0.0	283.407								
D-1		10.0	292.0	0.68	1.90	91	89	117		19.81	53.0
2		20.0	300.5	0.64	1.80	92	89	116	1.30	19.20	51.3
3	13:32	30.0	308.563	0.56	1.60	92	88	116		17.96	48.0
	13:34		308.563								
C-1		40.0	317.4	0.70	2.00	94	88	115		20.06	53.6
2		50.0	326.1	0.65	1.90	95	89	116		19.35	51.7
3	14:04	60.0	334.524	0.60	1.70	97	90	116		18.59	49.7
	14:06		334.524								
B-1		70.0	343.4	0.70	2.00	98	91	116		20.08	53.7
2		80.0	351.9	0.66	1.80	98	92	116		19.50	52.1
3	14:36	90.0	360.314	0.59	1.70	98	92	116		18.43	49.3
	14:38		360.314								
A-1		100.0	369.0	0.69	1.90	98	93	117		19.95	53.4
2		110.0	377.6	0.65	1.80	98	93	116		19.35	51.7
3	15:08	120.0	385.745	0.58	1.60	99	93	116		18.28	48.9
RESULTS		TT	VM		PM		TM	TS	STATIC	SDE	VEL
		120.0	102.338	0.801	1.808		93	116	1.30		
		net	net	avg	avg		avg	avg	avg	avg	ft/sec

Ps: 25.17 in. Hg
Bws: 0.1387

Vm(std): 83.065 cf
Md: 30.37 lb/lmol

Vw(std): 13.376 cf
Ms: 28.66 lb/lmol

%H20: 13.87 %
%EA: 44.22 %

Stack Gas Velocity (Vs): 51.4 ft/sec
Stack Gas Velocity (Vs): 3,082.8 ft/min
Stack Gas Flow Rate (Qstd): 1,941,290 DSCFM
Stack Gas Flow Rate (Qa): 2,923,758 ACFM
Isokinectic Ratio (I): **107.7** %

Weight Collected: **40.0** mg
PM Concentration: 13.82 mg/ACM
PM Concentration: 0.007 grains/dscf
Fd - Emission Rate: 0.015 lb/mmBtu
Fc - Emission Rate: 0.014 lb/mmBtu
PM Concentration: **8.44** mg/ACM @160C (wet)

Particulate Matter Determination Spreadsheet

Client: **Salt River Project**
Unit Tested: **Navajo 3**
Sampling Location: **Stack**
Run No: **3**

Date: 6/11/14
Start Time: 15:28
End Time: 17:35

Diameter of Nozzle: 0.240 inches
Area of Nozzle (An): 3.14E-04 sq. ft.
Barometric Pressure (Pbar): 25.07 in. Hg
Gas Meter Factor (Y): 1.01
Total Sample Time: 120.00 min
Number of Sample Points: 12

Stack Diameter: 417 inches
Area of Stack (As): 948.4 sq. ft.
Pitot Coefficient (Cp): 0.84
Volume of Moisture (Vlc): 278.0 ml
% CO2: 13.2 %
% O2: 6.4 %

Point ID	Clock Time	Time	Meter Volume	Delta P	Delta H	Dry Gas Meter Temp In	Dry Gas Meter Temp Out	Stack Temp	Static Pressure	SDE	VEL
	15:28	0.0	385.938								
A-1		10.0	394.5	0.69	1.90	94	92	116		19.94	53.3
2		20.0	403.0	0.64	1.80	96	92	115	1.30	19.18	51.3
3	15:58	30.0	411.110	0.58	1.60	97	92	115		18.26	48.8
	16:01		411.110								
B-1		40.0	419.6	0.65	1.80	95	91	116		19.35	51.7
2		50.0	418.1	0.63	1.80	96	91	116		19.05	50.9
3	16:31	60.0	436.209	0.57	1.60	97	91	116		18.12	48.4
	16:33		436.209								
C-1		70.0	445.0	0.70	2.00	98	92	115		20.06	53.6
2		80.0	453.7	0.68	1.90	99	93	115		19.77	52.9
3	17:03	90.0	462.062	0.60	1.70	99	93	115		18.57	49.7
	17:05		462.062								
D-1		100.0	470.8	0.69	1.09	99	94	116		19.94	53.3
2		110.0	479.3	0.66	1.80	100	94	115		19.48	52.1
3	17:35	120.0	487.424	0.57	1.60	100	94	115		18.10	48.4
RESULTS		TT	VM	SQ RT PIT	PM		TM	TS	STATIC	SDE	VEL
		120.0	101.486	0.798	1.716		95	115	1.30		
		net	net	avg	avg		avg	avg	avg	avg	ft/sec

Ps: 25.17 in. Hg
Bws: 0.1376

Vm(std): 82.092 cf
Md: 30.37 lb/lmol

Vw(std): 13.094 cf
Ms: 28.67 lb/lmol

%H20: 13.76 %
%EA: 43.17 %

Stack Gas Velocity (Vs): 51.2 ft/sec
Stack Gas Velocity (Vs): 3,072.4 ft/min
Stack Gas Flow Rate (Qstd): 1,939,565 DSCFM
Stack Gas Flow Rate (Qa): 2,913,928 ACFM
Isokinectic Ratio (I): **106.5** %

Weight Collected: **43.7** mg
PM Concentration: 15.20 mg/ACM
PM Concentration: 0.008 grains/dscf
Fd - Emission Rate: 0.017 lb/mmBtu
Fc - Emission Rate: 0.016 lb/mmBtu
PM Concentration: **9.33** mg/ACM @160C (wet)

CATALYST AIR MANAGEMENT, INC. (865) 531-0075
Air Quality Testing Services (865) 531-0750 Fax
2505 Byington Solway Road
Knoxville, TN 37931

Field Isokinetic Data Sheet

Client	SRP	Pitot No.	CAM-423	Filter Number	C3D-371
Plant	Navajo	Nozzle No.	CAM-205	Initial Leak (Samp.)	0.001 @ 8"
Location	Unit 3 Stack	Nozzle Dn.	.240	Initial Leak (Pitot)	OK @ 4"
Test	M5b	Stack TC No.	CAM-20		OK @ 5"
Run	1	Filter TC No.	N/A		
Date	6-11-14	Ambient Temp	92°F	Final Leak (Samp.)	0.000 @ 10"
Meter Box	020	Static	+1.4	Final Leak (Pitot)	OK @ 4"
ΔH	1.71 | Y: 1.01	P_B	25.07		OK @ 4"

POINT	TIME ACTUAL	RUN	METER	ΔP	Δh	STACK °F	PROBE °F	Filter °F	METER °F IN	OUT	EXIT °F	VAC
	1020		181.304									
A 1		5	185.7	.68	1.9	116	320	320	85	81	49	5
1		10	190.0	.68	1.9	117	320	320	85	82	50	5
2		15	194.3	.68	1.9	117	320	320	86	82	50	5
2		20	198.6	.68	1.9	116	318	320	86	82	51	5
3		25	202.7	.56	1.6	116	319	320	87	82	51	5
3	1050	30	206.721	.56	1.6	116	320	320	89	83	52	5
	1052		206.721									
B 1		35	211.1	.70	2.0	116	316	320	87	82	53	5
1		40	215.5	.70	2.0	116	319	320	89	83	49	5
2		45	219.9	.70	2.0	116	318	320	88	82	49	5
2		50	224.3	.70	2.0	116	319	320	91	85	52	5
3		55	228.4	.60	1.7	116	320	320	91	85	53	6
3	1122	60	232.564	.60	1.7	116	317	320	92	85	55	6
	1124		232.564									
C 1		65	236.9	.69	1.9	117	315	320	93	87	60	6
1		70	241.3	.69	1.9	117	318	320	94	88	53	6
2		75	245.6	.66	1.8	117	317	320	94	88	45	6
2		80	249.8	.66	1.8	116	316	320	95	88	49	6
3		85	254.0	.62	1.7	116	319	320	95	88	49	6
3	1154	90	258.161	.62	1.7	116	318	320	96	90	50	6
	1156		258.161									
D 1		95	262.5	.68	1.9	115	315	320	95	89	53	6
1		100	266.8	.68	1.9	115	318	320	96	90	49	6
2		105	271.1	.65	1.8	116	319	320	96	90	48	6
2		110	275.3	.65	1.8	116	320	320	95	90	50	6
3		115	279.3	.55	1.5	116	318	320	95	90	55	6
3	1226	120	283.220	.55	1.5	116	317	320	95	90		6

Operator: DiLong Imp 1: 320 Imp 2: 152 Imp 3: 4 Gel: 15

Comments: K = 2.8

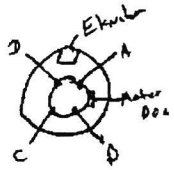

CAM-F-29

Rev: 2, 7/31/13
R.Derrera

CATALYST AIR MANAGEMENT, INC. (865) 531-0075
Air Quality Testing Services (865) 531-0750 Fax
2505 Byington-Solway Road
Knoxville, TN 37931

PLANT: NGS DATE: 6/11/14
SAMPLING TIME: (24 HR CLOCK) 1020 - 1226
SAMPLING LOCATION: 3
SAMPLING TYPE: Continuous
ANALYTICAL METHOD: 3A / 5B AMB. TEMP (°F) 92
TECHNICIAN: King / Whitt / Boys

DMW & Emission Data Sheet

Run 1

RUN / GAS	1		2		3		AVERAGE NET VOLUME	Fo (TEST) = $\frac{20.9 - \%O_2}{\%CO_2}$	
	ACTUAL READING	NET	ACTUAL READING	NET	ACTUAL READING	NET			
CO_2							13.2		
O_2 (NET IS ACTUAL MINUS ACTUAL CO_2)							6.4	Fuel Type: COAL, RESIDUAL FUEL OIL, NATURAL GAS	Fo (calc): 1.396, 1.218

SYSTEM LEAK CHECK ✓ NA initial
INITIAL ORSAT ANALYZER LEAK CHECK (FLUID LEVEL) ____/____ BUBBLER ____
FINAL ORSAT ANALYZER LEAK CHECK (FLUID LEVEL) ____/____ BUBBLER ____

MOISTURE

	1	2	3	4	5	6	GEL	TOTALS
FINAL (ml)	320	152	4				265	
INITIAL (ml)	100	100	0				250	
NET (ml)	120	52	4				15	291
TOTALS								291

PARTICULATE CATCH

FILTER WEIGHTS					PROBE/NOZZLE WASH				
FILTER NO.	C33-371			WEIGHED BY	BEAKER NO.	09		Blank	WEIGHED BY
FINAL WEIGHT	0.3700			RD	FINAL WEIGHT	106.9612		109.3780	RD
INITIAL WEIGHT	0.3543				INITIAL WEIGHT	106.9423		109.3778	
DIFFERENCE	0.0157				DIFFERENCE	0.0189		0.0002	
PARTICULATE CATCH	15.7				PARTICULATE CATCH	18.9		0.2	

TOTAL PARTICULATE CATCH (mg) 34.4

CATALYST AIR MANAGEMENT, INC. (865) 531-0075
Air Quality Testing Services (865) 531-0750 Fax
2505 Byington Solway Road
Knoxville, TN 37931

Field Isokinetic Data Sheet

Client	SRP	Pitot No.	CAM 428	Filter Number	C30-372
Plant	Navajo	Nozzle No.	CAM 203	Initial Leak (Samp.)	0.001 @ 10"
Location	Unit 3 Stack	Nozzle Dn.	.240	Initial Leak (Pitot)	OK @ 4"
Test	MS6	Stack TC No.	CAM-20		OK @ 4"
Run	2	Filter TC No.	N/A		
Date	6-13-14	Ambient Temp	87°F	Final Leak (Samp.)	0.001 @ 10"
Meter Box	020	Static	+1.3	Final Leak (Pitot)	OK @ 5"
ΔH	1.71 | Y: 1.01	P_B	25.07		OK @ 5"

POINT	TIME ACTUAL	RUN	METER	ΔP	Δh	STACK °F	PROBE °F	Filter °F	METER °F IN	OUT	EXIT °F	VAC
	1302		~~284~~.283.407									
D 1		5	287.7	.68	1.9	116	320	320	91	89	63	5
1		10	292.0	.68	1.9	117	318	320	91	89	45	5
2		15	296.3	.64	1.8	116	317	320	91	89	47	5
2		20	300.5	.64	1.8	116	316	320	92	89	52	5
3		25	304.5	.56	1.6	116	317	320	92	89	53	5
3	1332	30	308.563	.56	1.6	116	316	320	92	88	54	5
	1334		308.563									
C 1		35	313.0	.70	2.0	115	315	320	92	88	61	6
1		40	317.4	.70	2.0	115	319	320	94	88	52	6
2		45	321.8	.68	1.9	116	318	320	94	88	51	6
2		50	326.1	.68	1.9	116	317	320	95	89	56	6
3		55	330.3	.60	1.7	116	316	320	96	89	57	6
3	1404	60	334.524	.60	1.7	116	318	320	97	90	59	6
	1406		334.524									
D 1		65	338.9	.70	2.0	116	316	320	98	91	63	6
1		70	343.4	.70	2.0	116	319	320	98	91	61	6
2		75	347.7	.66	1.8	116	318	320	98	90	55	6
2		80	351.9	.66	1.8	116	317	320	98	92	54	6
3		85	356.1	.59	1.7	116	316	320	99	92	54	6
3	1436	90	360.314	.59	1.7	116	318	320	98	92	56	6
	1438		360.314									
B 1		95	364.7	.69	1.9	117	316	320	98	93	64	6
1		100	369.0	.69	1.9	117	319	320	98	93	54	6
2		105	373.3	.65	1.8	116	318	320	98	92	47	6
2		110	377.6	.65	1.8	116	317	320	98	93	47	6
3		115	381.6	.58	1.6	116	319	320	99	93	49	6
3	1508	120	385.745	.58	1.6	116	317	320	99	93	50	6

Operator: P.King Imp 1: 318 Imp 2: 146 Imp 3: 4 Gel: 16

Comments: K = 28

CATALYST AIR MANAGEMENT, INC. (865) 531-0075
Air Quality Testing Services (865) 531-0750 Fax
2505 Byington-Solway Road
Knoxville, TN 37931

PLANT: NGS DATE: 6/11/14
SAMPLING TIME: (24 HR CLOCK) 1302 - 1508
SAMPLING LOCATION: 3
SAMPLING TYPE: Continuous
ANALYTICAL METHOD: 3A / 5B AMB. TEMP (°F) 87
TECHNICIAN: Kuj / Whick / Bays

DMW & Emission Data Sheet

Run 2

RUN / GAS	1		2		3		AVERAGE NET VOLUME	Fo (TEST) = $\frac{20.9 - \%O_2}{\%CO_2}$	
	ACTUAL READING	NET	ACTUAL READING	NET	ACTUAL READING	NET			
CO_2							13.2		
O_2 (NET IS ACTUAL MINUS ACTUAL CO_2)							6.5	Fuel Type COAL RESIDUAL FUEL OIL NATURAL GAS	Fo (calc) 1.280 1.118

SYSTEM LEAK CHECK ok
INITIAL ORSAT ANALYZER LEAK CHECK (FLUID LEVEL) NA / BUBBLER
FINAL ORSAT ANALYZER LEAK CHECK (FLUID LEVEL) / BUBBLER

MOISTURE

	1	2	3	4	5	6	GEL	TOTALS
FINAL (ml)	318	146	4				266	
INITIAL (ml)	100	100	0				250	
NET (ml)	218	46	4				16	284
TOTALS								284

PARTICULATE CATCH

FILTER WEIGHTS

FILTER NO.	C3B-372			WEIGHED BY
FINAL WEIGHT	0.3699			RD
INITIAL WEIGHT	0.3556			
DIFFERENCE	0.0143			
PARTICULATE CATCH	14.3			

PROBE/NOZZLE WASH

BEAKER NO.	11		Blank	WEIGHED BY
FINAL WEIGHT	108.6532			RD
INITIAL WEIGHT	108.6273			
DIFFERENCE	0.0259			
PARTICULATE CATCH	25.9		0.2	

TOTAL PARTICULATE CATCH (mg) 40.0

CATALYST AIR MANAGEMENT, INC. (865) 531-0075
Air Quality Testing Services (865) 531-0750 Fax
2505 Byington Solway Road
Knoxville, TN 37931

Field Isokinetic Data Sheet

Client	SRP	Pitot No.	CAM 433	Filter Number	C3D-373
Plant	Navajo	Nozzle No.	CAM 203	Initial Leak (Samp.)	0.001 @ 9"
Location	Unit 3 Stack	Nozzle Dn.	.240	Initial Leak (Pitot)	OK @ 5"
Test	M5b	Stack TC No.	CAM 20		OK @ 5"
Run	3	Filter TC No.	N/A		
Date	6-11-14	Ambient Temp	85°F	Final Leak (Samp.)	0.001 @ 10"
Meter Box	020	Static	+1.3	Final Leak (Pitot)	OK @ 4"
ΔH	1.71 | Y: 1.01	P_B	25.07		OK @ 4"

POINT	TIME ACTUAL	RUN	METER	ΔP	Δh	STACK °F	PROBE °F	Filter °F	METER °F IN	OUT	EXIT °F	VAC
	1528		385.938									
A 1		5	390.2	.69	1.9	117	320	320	95	92	66	5
1		10	394.5	.69	1.9	116	317	320	94	92	46	5
2		15	398.8	.64	1.8	116	318	320	95	92	48	5
2		20	403.0	.64	1.8	115	319	320	96	92	49	5
3		25	407.0	.58	1.6	115	318	320	96	92	52	5
3	1558	30	411.110	.58	1.6	115	316	320	97	92	53	6
	1601		411.110									
B 1		35	415.3	.65	1.8	116	316	320	96	91	55	6
1		40	419.6	.65	1.8	116	320	320	95	91	53	6
2		45	423.9	.63	1.8	116	318	320	95	91	50	6
2		50	428.1	.63	1.8	116	316	320	96	91	51	6
3		55	432.1	.57	1.6	116	319	320	97	91	53	6
3	1631	60	436.209	.57	1.6	116	318	320	97	91	56	6
	1633		436.209									
C 1		65	440.6	.70	2.0	115	316	320	97	92	61	6
1		70	445.0	.70	2.0	115	317	320	98	92	48	6
2		75	449.4	.68	1.9	116	319	320	99	92	46	6
2		80	453.7	.68	1.9	115	317	320	99	93	47	6
3		85	457.9	.60	1.7	115	318	320	99	93	48	6
3	1703	90	462.062	.60	1.7	115	319	320	99	93	48	6
	1705		462.062									
D 1		95	466.4	.69	1.9	115	315	320	99	93	51	6
1		100	470.8	.69	1.9	116	318	320	99	94	46	6
2		105	475.0	.66	1.8	115	317	320	100	94	47	6
2		110	479.3	.66	1.8	115	318	320	100	94	51	6
3		115	483.3	.57	1.6	115	316	320	100	94	53	6
3	1735	120	487.424	.57	1.6	115	317	320	100	94	54	6

Operator: D. King Imp 1: 312 Imp 2: 150 Imp 3: 4 Gel: R

Comments: K

CATALYST AIR MANAGEMENT, INC. (865) 531-0075
Air Quality Testing Services (865) 531-0750 Fax
2505 Byington-Solway Road
Knoxville, TN 37931

PLANT: NGS DATE: 6/11/14
SAMPLING TIME: (24 HR CLOCK) 1528 - 1735
SAMPLING LOCATION: 3
SAMPLING TYPE: Continuous
ANALYTICAL METHOD: 3A / 5B AMB. TEMP (°F) 85
TECHNICIAN: Kaj / Whitt / Boyd

DMW & Emission Data Sheet

Run 3

RUN / GAS	1		2		3		AVERAGE NET VOLUME	Fo (TEST) = $\frac{20.9 - \%O_2}{\%CO2}$	
	ACTUAL READING	NET	ACTUAL READING	NET	ACTUAL READING	NET			
CO_2							132		
O_2 (NET IS ACTUAL MINUS ACTUAL CO_2)							6.4	Fuel Type COAL RESIDUAL FUEL OIL NATURAL GAS	Fo (calc) 1.396 1.718

SYSTEM LEAK CHECK ok. NA not mtl
INITIAL ORSAT ANALYZER LEAK CHECK (FLUID LEVEL) _____ / _____ BUBBLER _____
FINAL ORSAT ANALYZER LEAK CHECK (FLUID LEVEL) _____ / _____ BUBBLER _____

MOISTURE

	1	2	3	4	5	6	GEL	TOTALS
FINAL (ml)	312	150	4				262	
INITIAL (ml)	100	100	0				250	
NET (ml)	212	50	4				12	278
TOTALS								278

PARTICULATE CATCH

FILTER WEIGHTS					PROBE/NOZZLE WASH				
FILTER NO.	C3B-373			WEIGHED BY	BEAKER NO.	12		Blank	WEIGHED BY
FINAL WEIGHT	0.3695			RD	FINAL WEIGHT	101.7076			RD
INITIAL WEIGHT	0.3542				INITIAL WEIGHT	101.6760			
DIFFERENCE	0.0153				DIFFERENCE	0.0286			
PARTICULATE CATCH	15.3				PARTICULATE CATCH	28.6		0.2	

TOTAL PARTICULATE CATCH (mg) 43.7

CATALYST AIR MANAGEMENT Inc.
CALIBRATION DATA

CLIENT: Salt River Project
PLANT: NGS
UNIT: 3
TEST: 3A
LOCATION: Stack

RUN #: 1-3

DATE: 6/11/2014

Run 1-3

GAS UNITS	ANALYZER SCALE	CYLINDER VALUE	ANALYZER VALUE	DIFF PPM	% SPAN	Pass Yes\No
O2, %		0.00	0.00	0.00	0.00	**YES**
O2, %	**25**	12.19	12.21	0.02	0.09	**YES**
O2, %		21.90	21.84	0.06	0.27	**YES**
CO2, %		0.00	0.00	0.00	0.00	**YES**
CO2, %	**20**	10.130	10.07	0.06	0.36	**YES**
CO2, %		16.67	16.62	0.05	0.30	**YES**

RUN 1
SYSTEM CALIBRATION BIAS AND DRIFT DATA

GAS UNITS	ANALYZER VALUE	PRE-TEST CHECK	% SPAN	Pass YES\NO	POST-TEST CHECK	% SPAN	% DRIFT	Pass YES\NO
O2, %	0.00	0.00	0.00	**YES**	0.00	0.00	0.00	**YES**
O2, %	12.21	12.05	0.73	**YES**	11.82	1.78	1.05	**YES**
CO2, %	0.00	0.00	0.00	**YES**	0.00	0.00	0.00	**YES**
CO2, %	10.07	9.92	0.90	**YES**	9.75	1.92	1.02	**YES**

UNCORRECTED ANALYZER VALUES

	DRY
O2, %	6.29
CO2, %	12.84

ANALYZER VALUES CORRECTED FOR DRIFT

	DRY
O2, %	6.4
CO2, %	13.2

RUN 2
SYSTEM CALIBRATION BIAS AND DRIFT DATA

GAS UNITS	ANALYZER VALUE	PRE-TEST CHECK	% SPAN	Pass YES\NO	POST-TEST CHECK	% SPAN	% DRIFT	Pass YES\NO
O2, %	0.00	0.00	0.00	**YES**	0.00	0.00	0.00	**YES**
O2, %	12.21	11.82	1.78	**YES**	11.75	2.10	0.32	**YES**
CO2, %	0.00	0.00	0.00	**YES**	0.00	0.00	0.00	**YES**
CO2, %	10.07	9.75	1.92	**YES**	9.81	1.56	0.36	**YES**

UNCORRECTED ANALYZER VALUES

	DRY
O2, %	6.25
CO2, %	12.71

ANALYZER VALUES CORRECTED FOR DRIFT

	DRY
O2, %	6.5
CO2, %	13.2

RUN 3
SYSTEM CALIBRATION BIAS AND DRIFT DATA

GAS UNITS	ANALYZER VALUE	PRE-TEST CHECK	% SPAN	Pass YES\NO	POST-TEST CHECK	% SPAN	% DRIFT	Pass YES\NO
O2, %	0.00	0.00	0.00	**YES**	0.00	0.00	0.00	**YES**
O2, %	12.21	11.75	2.10	**YES**	11.68	2.42	0.32	**YES**
CO2, %	0.00	0.00	0.00	**YES**	0.00	0.00	0.00	**YES**
CO2, %	10.07	9.81	1.56	**YES**	9.82	1.50	0.06	**YES**

UNCORRECTED ANALYZER VALUES

	DRY
O2, %	6.17
CO2, %	12.81

ANALYZER VALUES CORRECTED FOR DRIFT

	DRY
O2, %	6.4
CO2, %	13.2

CATALYST AIR MANAGEMENT Inc.
O2/CO2 DATA

Run 1

DATE	TIME	O2	CO2
6/11/14	10:20	6.05	13.07
6/11/14	10:21	6.14	13
6/11/14	10:22	6.23	12.92
6/11/14	10:23	6.27	12.97
6/11/14	10:24	6.14	13.04
6/11/14	10:25	6.09	13.03
6/11/14	10:26	6.26	12.91
6/11/14	10:27	6.36	12.78
6/11/14	10:28	6.45	12.77
6/11/14	10:29	6.45	12.82
6/11/14	10:30	6.4	12.84
6/11/14	10:31	6.3	12.96
6/11/14	10:32	6.23	12.94
6/11/14	10:33	6.3	12.92
6/11/14	10:34	6.25	12.95
6/11/14	10:35	6.19	12.94
6/11/14	10:36	6.36	12.8
6/11/14	10:37	6.43	12.79
6/11/14	10:38	6.38	12.87
6/11/14	10:39	6.32	12.86
6/11/14	10:40	6.43	12.7
6/11/14	10:41	6.56	12.64
6/11/14	10:53	6.42	12.79
6/11/14	10:54	6.35	12.8
6/11/14	10:55	6.3	12.79
6/11/14	10:56	6.37	12.77
6/11/14	10:57	6.36	12.77
6/11/14	10:58	6.42	12.77
6/11/14	10:59	6.34	12.77
6/11/14	11:00	6.34	12.8
6/11/14	11:01	6.3	12.81
6/11/14	11:02	6.28	12.84
6/11/14	11:03	6.27	12.82
6/11/14	11:04	6.35	12.75
6/11/14	11:05	6.33	12.8
6/11/14	11:06	6.31	12.79
6/11/14	11:07	6.4	12.74
6/11/14	11:08	6.41	12.74
6/11/14	11:09	6.29	12.83
6/11/14	11:10	6.26	12.82
6/11/14	11:11	6.3	12.87
6/11/14	11:12	6.23	12.91
6/11/14	11:13	6.2	12.95
6/11/14	11:14	6.13	12.94
6/11/14	11:27	6.25	12.82
6/11/14	11:28	6.23	12.86
6/11/14	11:29	6.08	12.99
6/11/14	11:30	6.06	13.02
6/11/14	11:31	6.01	13.13
6/11/14	11:32	6.02	12.97
6/11/14	11:33	6.27	12.77
6/11/14	11:34	6.39	12.7
6/11/14	11:35	6.35	12.77
6/11/14	11:36	6.3	12.83
6/11/14	11:37	6.29	12.84
6/11/14	11:38	6.24	12.91
6/11/14	11:39	6.23	12.84
6/11/14	11:40	6.32	12.81
6/11/14	11:41	6.3	12.81
6/11/14	11:42	6.32	12.79
6/11/14	11:43	6.29	12.87
6/11/14	11:44	6.19	12.9
6/11/14	11:45	6.4	12.71
6/11/14	11:46	6.46	12.7
6/11/14	11:47	6.43	12.72
6/11/14	11:48	6.47	12.66
6/11/14	11:58	6.46	12.68
6/11/14	11:59	6.38	12.74
6/11/14	12:00	6.32	12.79
6/11/14	12:01	6.28	12.79
6/11/14	12:02	6.26	12.86
6/11/14	12:03	6.18	12.92
6/11/14	12:04	6.16	12.91
6/11/14	12:05	6.19	12.94
6/11/14	12:06	6.18	12.86
6/11/14	12:07	6.22	12.87
6/11/14	12:08	6.17	12.88
6/11/14	12:09	6.21	12.82
6/11/14	12:10	6.39	12.72
6/11/14	12:11	6.37	12.77
6/11/14	12:12	6.39	12.67
6/11/14	12:13	6.5	12.65
6/11/14	12:14	6.36	12.78
6/11/14	12:15	6.26	12.89
6/11/14	12:16	6.11	12.94
6/11/14	12:17	6.17	12.81
6/11/14	12:18	6.26	12.83
6/11/14	12:19	6.24	12.84
		6.29	12.84

Run 2

DATE	TIME	O2	CO2
6/11/14	13:02	6.18	12.88
6/11/14	13:03	6.13	12.89
6/11/14	13:04	6.19	12.77
6/11/14	13:05	6.34	12.76
6/11/14	13:06	6.22	12.77
6/11/14	13:07	6.24	12.73
6/11/14	13:08	6.3	12.76
6/11/14	13:09	6.29	12.74
6/11/14	13:10	6.32	12.77
6/11/14	13:11	6.17	12.84
6/11/14	13:12	6.15	12.8
6/11/14	13:13	6.15	12.87
6/11/14	13:14	6.06	12.95
6/11/14	13:15	6.15	12.88
6/11/14	13:16	6.19	12.76
6/11/14	13:17	6.35	12.63
6/11/14	13:18	6.41	12.63
6/11/14	13:19	6.41	12.62
6/11/14	13:20	6.42	12.62
6/11/14	13:21	6.43	12.55
6/11/14	13:22	6.52	12.48
6/11/14	13:23	6.55	12.41
6/11/14	13:35	6.5	12.49
6/11/14	13:36	6.47	12.58
6/11/14	13:37	6.35	12.65
6/11/14	13:38	6.32	12.64
6/11/14	13:39	6.29	12.63
6/11/14	13:40	6.37	12.58
6/11/14	13:41	6.4	12.59
6/11/14	13:42	6.44	12.49
6/11/14	13:43	6.52	12.47
6/11/14	13:44	6.51	12.49
6/11/14	13:45	6.42	12.51
6/11/14	13:46	6.46	12.45
6/11/14	13:47	6.44	12.52
6/11/14	13:48	6.44	12.53
6/11/14	13:49	6.43	12.57
6/11/14	13:50	6.35	12.62
6/11/14	13:51	6.29	12.67
6/11/14	13:52	6.25	12.75
6/11/14	13:53	6.07	12.84
6/11/14	13:54	6.17	12.73
6/11/14	13:55	6.28	12.68
6/11/14	13:56	6.28	12.72
6/11/14	14:07	6.02	12.86
6/11/14	14:08	6.17	12.74
6/11/14	14:09	6.24	12.77
6/11/14	14:10	6.22	12.67
6/11/14	14:11	6.29	12.61
6/11/14	14:12	6.33	12.62
6/11/14	14:13	6.31	12.69
6/11/14	14:14	6.19	12.72
6/11/14	14:15	6.18	12.74
6/11/14	14:16	6.17	12.73
6/11/14	14:17	6.22	12.67
6/11/14	14:18	6.27	12.71
6/11/14	14:19	6.14	12.79
6/11/14	14:20	6.12	12.8
6/11/14	14:21	6.07	12.75
6/11/14	14:22	6.23	12.72
6/11/14	14:23	6.17	12.78
6/11/14	14:24	6.07	12.83
6/11/14	14:25	6.08	12.8
6/11/14	14:26	6.13	12.74
6/11/14	14:27	6.15	12.73
6/11/14	14:28	6.17	12.73
6/11/14	14:41	5.92	12.65
6/11/14	14:42	6.14	12.7
6/11/14	14:43	6.2	12.67
6/11/14	14:44	6.33	12.67
6/11/14	14:45	6.18	12.71
6/11/14	14:46	6.21	12.77
6/11/14	14:47	6.15	12.84
6/11/14	14:48	6.07	12.83
6/11/14	14:49	6.12	12.82
6/11/14	14:50	6.19	12.75
6/11/14	14:51	6.18	12.83
6/11/14	14:52	6.12	12.85
6/11/14	14:53	6.2	12.76
6/11/14	14:54	6.22	12.8
6/11/14	14:55	6.25	12.71
6/11/14	14:56	6.27	12.72
6/11/14	14:57	6.32	12.74
6/11/14	14:58	6.24	12.8
6/11/14	14:59	6.23	12.8
6/11/14	15:00	6.23	12.78
6/11/14	15:01	6.28	12.79
6/11/14	15:02	6.22	12.79
		6.25	12.71

Run 3

DATE	TIME	O2	CO2
6/11/14	15:28	6.1	12.93
6/11/14	15:29	6.1	12.93
6/11/14	15:30	5.99	12.98
6/11/14	15:31	6.07	13
6/11/14	15:32	6	12.93
6/11/14	15:33	6.12	12.88
6/11/14	15:34	6.23	12.79
6/11/14	15:35	6.27	12.76
6/11/14	15:36	6.35	12.68
6/11/14	15:37	6.3	12.81
6/11/14	15:38	6.08	12.9
6/11/14	15:39	6.16	12.89
6/11/14	15:40	6.15	12.96
6/11/14	15:41	6.05	12.9
6/11/14	15:42	6.13	12.89
6/11/14	15:43	6.08	12.99
6/11/14	15:44	6.03	12.98
6/11/14	15:45	6.05	12.96
6/11/14	15:46	6.02	12.96
6/11/14	15:47	6.04	12.94
6/11/14	15:48	6.17	12.86
6/11/14	15:49	6.13	12.92
6/11/14	16:02	6.05	12.93
6/11/14	16:03	6.01	12.96
6/11/14	16:04	6.06	12.9
6/11/14	16:05	6.16	12.82
6/11/14	16:06	6.14	12.86
6/11/14	16:07	6.22	12.81
6/11/14	16:08	6.21	12.83
6/11/14	16:09	6.08	12.87
6/11/14	16:10	6.09	12.87
6/11/14	16:11	6.14	12.83
6/11/14	16:12	6.15	12.87
6/11/14	16:13	6.01	12.96
6/11/14	16:14	5.99	12.94
6/11/14	16:15	6.12	12.86
6/11/14	16:16	6.11	12.79
6/11/14	16:17	6.25	12.74
6/11/14	16:18	6.23	12.77
6/11/14	16:19	6.2	12.77
6/11/14	16:20	6.21	12.79
6/11/14	16:21	6.1	12.87
6/11/14	16:22	6.05	12.87
6/11/14	16:23	6.12	12.84
6/11/14	16:34	6.36	12.67
6/11/14	16:35	6.33	12.64
6/11/14	16:36	6.38	12.63
6/11/14	16:37	6.32	12.69
6/11/14	16:38	6.43	12.5
6/11/14	16:39	6.43	12.63
6/11/14	16:40	6.3	12.69
6/11/14	16:41	6.36	12.62
6/11/14	16:42	6.34	12.63
6/11/14	16:43	6.37	12.53
6/11/14	16:44	6.43	12.63
6/11/14	16:45	6.25	12.76
6/11/14	16:46	6.23	12.74
6/11/14	16:47	6.22	12.8
6/11/14	16:48	6.16	12.79
6/11/14	16:49	6.19	12.73
6/11/14	16:50	6.24	12.72
6/11/14	16:51	6.29	12.7
6/11/14	16:52	6.33	12.69
6/11/14	16:53	6.2	12.79
6/11/14	16:54	6.15	12.78
6/11/14	16:55	6.15	12.81
6/11/14	17:07	6.15	12.91
6/11/14	17:08	5.99	12.96
6/11/14	17:09	5.98	12.92
6/11/14	17:10	6.06	12.8
6/11/14	17:11	6.2	12.77
6/11/14	17:12	6.18	12.73
6/11/14	17:13	6.25	12.71
6/11/14	17:14	6.23	12.71
6/11/14	17:15	6.29	12.7
6/11/14	17:16	6.21	12.75
6/11/14	17:17	6.14	12.75
6/11/14	17:18	6.2	12.76
6/11/14	17:19	6.17	12.83
6/11/14	17:20	6.12	12.77
6/11/14	17:21	6.2	12.77
6/11/14	17:22	6.17	12.77
6/11/14	17:23	6.16	12.78
6/11/14	17:24	6.16	12.8
6/11/14	17:25	6.23	12.74
6/11/14	17:26	6.19	12.75
6/11/14	17:27	6.17	12.76
6/11/14	17:28	6.13	12.76
		6.17	12.81

SRP-NGS U3

Moisture Volume

RUN		1	2	3
IMP	1	100.0	100.0	100.0
		320.0	318.0	312.0
		220.0	218.0	212.0
IMP	2	100.0	100.0	100.0
		152.0	146.0	150.0
		52.0	46.0	50.0
IMP	3	0.0	0.0	0.0
		4.0	4.0	4.0
		4.0	4.0	4.0
	Gel	250.0	250.0	250.0
		265.0	266.0	262.0
		15.0	16.0	12.0
TOTAL		**291.0**	**284.0**	**278.0**

APPENDIX 2
PLANT DATA

Unit 1

Date/Time	UNIT1 CO2PCTC Value	UNIT1 COALFLOW Value	UNIT1 UNITLOAD Value
06/22/2014 07:42	11.3	699.0	809
06/22/2014 07:43	11.2	699.0	809
06/22/2014 07:44	11.2	699.0	809
06/22/2014 07:45	11.2	701.6	810
06/22/2014 07:46	11.1	707.0	811
06/22/2014 07:47	11.1	707.0	814
06/22/2014 07:48	11.1	707.0	814
06/22/2014 07:49	11.1	705.6	814
06/22/2014 07:50	11.2	698.9	813
06/22/2014 07:51	11.3	698.9	812
06/22/2014 07:52	11.3	698.9	811
06/22/2014 07:53	11.3	698.9	811
06/22/2014 07:54	11.2	698.9	811
06/22/2014 07:55	11.2	698.9	809
06/22/2014 07:56	11.2	698.9	808
06/22/2014 07:57	11.2	698.9	808
06/22/2014 07:58	11.2	698.9	808
06/22/2014 07:59	11.2	698.9	810
06/22/2014 08:00	11.2	698.9	811
06/22/2014 08:01	11.2	698.9	811
06/22/2014 08:02	11.1	698.9	811
06/22/2014 08:03	11.2	698.9	813
06/22/2014 08:04	11.2	698.9	814
06/22/2014 08:05	11.2	698.9	811
06/22/2014 08:06	11.3	698.9	809
06/22/2014 08:07	11.3	700.3	809
06/22/2014 08:08	11.2	707.1	809
06/22/2014 08:09	11.1	707.1	810
06/22/2014 08:10	11.1	707.1	813
06/22/2014 08:11	11.1	707.1	813
06/22/2014 08:12	11.1	707.1	814
06/22/2014 08:13	11.2	697.7	815
06/22/2014 08:14	11.2	690.9	813
06/22/2014 08:15	11.3	690.9	811
06/22/2014 08:16	11.3	690.9	809
06/22/2014 08:17	11.2	690.9	809
06/22/2014 08:18	11.2	690.9	808
06/22/2014 08:19	11.2	698.9	808
06/22/2014 08:20	11.2	698.9	809
06/22/2014 08:21	11.2	698.9	810
06/22/2014 08:22	11.2	698.9	813
06/22/2014 08:23	11.1	696.1	815
06/22/2014 08:24	11.1	682.3	814
06/22/2014 08:25	11.2	682.3	810
06/22/2014 08:26	11.4	682.3	808

U1 Run 1

06/22/2014 08:27	11.3	687.8	807	
06/22/2014 08:28	11.1	690.6	808	
06/22/2014 08:29	11.2	698.9	808	
06/22/2014 08:30	11.2	705.6	809	
06/22/2014 08:31	11.2	707.0	810	
06/22/2014 08:32	11.1	707.0	812	
06/22/2014 08:33	11.0	707.0	814	
06/22/2014 08:34	11.1	707.0	813	
06/22/2014 08:35	11.1	707.0	814	
06/22/2014 08:36	11.1	707.0	814	
06/22/2014 08:37	11.2	701.5	814	
06/22/2014 08:38	11.2	698.7	812	
06/22/2014 08:39	11.2	698.7	811	
06/22/2014 08:40	11.3	698.7	810	
06/22/2014 08:41	11.2	698.7	810	
06/22/2014 08:42	11.1	698.7	812	
06/22/2014 08:43	11.1	698.7	813	
06/22/2014 08:44	11.1	692.0	814	
06/22/2014 08:45	11.2	690.6	813	
06/22/2014 08:46	11.3	690.6	812	
06/22/2014 08:47	11.3	690.6	810	
Avg.	11.2	698.7	811.1	
06/22/2014 09:07	11.2	706.7	811	U1 Run 2
06/22/2014 09:08	11.2	706.7	812	
06/22/2014 09:09	11.1	706.7	813	
06/22/2014 09:10	11.1	699.9	814	
06/22/2014 09:11	11.2	698.6	813	
06/22/2014 09:12	11.3	698.6	812	
06/22/2014 09:13	11.3	698.6	812	
06/22/2014 09:14	11.2	695.9	811	
06/22/2014 09:15	11.1	690.6	810	
06/22/2014 09:16	11.2	690.6	809	
06/22/2014 09:17	11.2	690.6	809	
06/22/2014 09:18	11.2	690.6	810	
06/22/2014 09:19	11.1	690.6	811	
06/22/2014 09:20	11.2	690.6	812	
06/22/2014 09:21	11.2	690.6	813	
06/22/2014 09:22	11.2	690.6	813	
06/22/2014 09:23	11.2	690.6	812	
06/22/2014 09:24	11.2	690.6	811	
06/22/2014 09:25	11.3	690.6	808	
06/22/2014 09:26	11.2	696.1	807	
06/22/2014 09:27	11.2	706.9	808	
06/22/2014 09:28	11.1	706.9	810	
06/22/2014 09:29	11.0	706.9	811	
06/22/2014 09:30	11.0	706.9	814	

06/22/2014 09:31	11.0	706.9	814	
06/22/2014 09:32	11.0	704.2	814	
06/22/2014 09:33	11.2	698.8	813	
06/22/2014 09:34	11.2	698.8	813	
06/22/2014 09:35	11.2	690.8	811	
06/22/2014 09:36	11.2	690.8	812	
06/22/2014 09:37	11.2	690.8	811	
06/22/2014 09:38	11.1	690.8	809	
06/22/2014 09:39	11.2	693.5	809	
06/22/2014 09:40	11.3	698.8	809	
06/22/2014 09:41	11.1	698.8	809	
06/22/2014 09:42	11.1	698.8	811	
06/22/2014 09:43	11.1	698.8	813	
06/22/2014 09:44	11.2	698.8	813	
06/22/2014 09:45	11.2	693.3	814	
06/22/2014 09:46	11.2	690.5	813	
06/22/2014 09:47	11.2	678.3	811	
06/22/2014 09:48	11.3	676.9	807	
06/22/2014 09:49	11.3	697.8	806	
06/22/2014 09:50	11.2	696.6	808	
06/22/2014 09:51	11.1	714.7	808	
06/22/2014 09:52	11.0	709.1	810	
06/22/2014 09:53	11.1	707.7	812	
06/22/2014 09:54	10.9	707.7	815	
06/22/2014 09:55	10.9	703.8	814	
06/22/2014 09:56	10.9	705.2	814	
06/22/2014 09:57	11.1	691.6	814	
06/22/2014 09:58	11.2	687.5	813	
06/22/2014 09:59	11.2	683.5	810	
06/22/2014 10:00	6.7	683.5	808	
06/22/2014 10:01	9.4	699.8	807	
06/22/2014 10:02	0.4	707.9	808	
06/22/2014 10:03	0.1	707.9	810	
06/22/2014 10:04	6.6	707.9	811	
06/22/2014 10:05	11.3	707.9	814	
06/22/2014 10:06	11.3	707.9	815	
06/22/2014 10:07	11.3	702.3	815	
06/22/2014 10:08	11.3	683.3	814	
06/22/2014 10:09	11.4	683.3	810	
06/22/2014 10:10	11.3	683.3	809	
06/22/2014 10:11	11.4	683.3	809	
Avg.	10.7	696.8	811.2	
06/22/2014 10:35	11.3	683.3	813	U1 Run 3
06/22/2014 10:36	11.4	683.3	810	
06/22/2014 10:37	11.2	688.6	808	
06/22/2014 10:38	11.3	704.9	807	

06/22/2014 10:39	11.2	702.1	810
06/22/2014 10:40	11.2	699.4	811
06/22/2014 10:41	11.1	699.4	812
06/22/2014 10:42	11.1	699.4	814
06/22/2014 10:43	11.2	699.4	815
06/22/2014 10:44	11.2	699.4	814
06/22/2014 10:45	11.3	699.4	811
06/22/2014 10:46	11.3	699.4	811
06/22/2014 10:47	11.2	699.4	811
06/22/2014 10:48	11.1	699.4	810
06/22/2014 10:49	11.2	699.4	809
06/22/2014 10:50	11.3	699.4	808
06/22/2014 10:51	11.2	699.4	809
06/22/2014 10:52	11.1	699.4	810
06/22/2014 10:53	11.1	699.4	811
06/22/2014 10:54	11.2	699.4	813
06/22/2014 10:55	11.2	696.7	815
06/22/2014 10:56	11.2	683.0	813
06/22/2014 10:57	11.3	683.0	809
06/22/2014 10:58	11.3	683.0	807
06/22/2014 10:59	11.3	688.3	807
06/22/2014 11:00	11.1	691.0	808
06/22/2014 11:01	11.1	691.0	808
06/22/2014 11:02	11.1	696.4	809
06/22/2014 11:03	11.2	699.0	810
06/22/2014 11:04	11.2	699.0	809
06/22/2014 11:05	11.2	699.0	810
06/22/2014 11:06	11.2	699.0	811
06/22/2014 11:07	11.1	699.0	811
06/22/2014 11:08	11.2	699.0	812
06/22/2014 11:09	11.2	699.0	811
06/22/2014 11:10	11.2	699.0	810
06/22/2014 11:11	11.2	699.0	810
06/22/2014 11:12	11.2	699.0	809
06/22/2014 11:13	11.2	701.7	809
06/22/2014 11:14	11.2	707.1	810
06/22/2014 11:15	11.1	707.1	811
06/22/2014 11:16	11.1	707.1	813
06/22/2014 11:17	11.1	707.1	814
06/22/2014 11:18	11.2	703.0	815
06/22/2014 11:19	11.2	690.8	813
06/22/2014 11:20	11.3	690.8	809
06/22/2014 11:21	11.3	692.2	807
06/22/2014 11:22	11.3	698.9	807
06/22/2014 11:23	11.2	706.9	808
06/22/2014 11:24	11.1	706.9	809
06/22/2014 11:25	11.1	706.9	812

06/22/2014 11:26	11.1	706.9	813
06/22/2014 11:27	11.1	706.9	814
06/22/2014 11:28	11.1	702.8	815
06/22/2014 11:29	11.2	698.6	813
06/22/2014 11:30	11.2	698.6	811
06/22/2014 11:31	11.3	698.6	811
06/22/2014 11:32	11.3	698.6	808
06/22/2014 11:33	11.2	699.9	808
06/22/2014 11:34	11.2	706.7	809
06/22/2014 11:35	11.1	706.7	809
06/22/2014 11:36	11.1	706.7	809
06/22/2014 11:37	11.1	706.7	809
06/22/2014 11:38	11.1	706.7	810
06/22/2014 11:39	11.0	706.7	811
Avg.	11.2	699.0	810.5

Unit 2

Date/Time	UNIT2 CO2PCTC Value	UNIT2 COALFLOW Value	UNIT2 UNITLOAD Value
06/24/2014 07:29	10.2	728.3	805
06/24/2014 07:30	10.1	728.3	807
06/24/2014 07:31	10.1	728.3	807
06/24/2014 07:32	10.1	728.3	809
06/24/2014 07:33	10.3	728.3	807
06/24/2014 07:34	10.2	728.3	806
06/24/2014 07:35	10.3	728.3	809
06/24/2014 07:36	10.3	728.3	810
06/24/2014 07:37	10.2	722.9	810
06/24/2014 07:38	10.3	720.2	808
06/24/2014 07:39	10.4	720.2	808
06/24/2014 07:40	10.3	720.2	808
06/24/2014 07:41	10.3	720.2	808
06/24/2014 07:42	10.2	720.2	807
06/24/2014 07:43	10.2	720.2	807
06/24/2014 07:44	10.2	720.2	808
06/24/2014 07:45	10.2	720.2	807
06/24/2014 07:46	10.2	720.2	807
06/24/2014 07:47	10.3	720.2	807
06/24/2014 07:48	10.3	720.2	807
06/24/2014 07:49	10.2	722.9	806
06/24/2014 07:50	10.2	728.2	805
06/24/2014 07:51	10.3	728.2	806
06/24/2014 07:52	10.2	728.2	806
06/24/2014 07:53	10.2	728.2	807
06/24/2014 07:54	10.2	728.2	808
06/24/2014 07:55	10.2	728.2	808
06/24/2014 07:56	10.2	728.2	807
06/24/2014 07:57	10.2	728.2	807
06/24/2014 07:58	10.2	728.2	807
06/24/2014 07:59	10.2	728.2	808
06/24/2014 08:00	10.3	728.2	809
06/24/2014 08:01	10.3	728.2	810
06/24/2014 08:02	10.3	728.2	809
06/24/2014 08:03	10.3	728.2	809
06/24/2014 08:04	10.4	728.2	809
06/24/2014 08:05	10.3	728.2	810
06/24/2014 08:06	10.3	728.2	810
06/24/2014 08:07	10.3	728.2	810
06/24/2014 08:08	10.3	728.2	809
06/24/2014 08:09	10.3	728.2	810
06/24/2014 08:10	10.3	728.2	809
06/24/2014 08:11	10.2	728.2	809
06/24/2014 08:12	10.3	728.2	810
06/24/2014 08:13	10.2	728.2	810

U2 Run 1

06/24/2014 08:14	10.2	728.2	808
06/24/2014 08:15	10.3	728.2	809
06/24/2014 08:16	10.3	728.2	809
06/24/2014 08:17	10.2	728.2	808
06/24/2014 08:18	10.3	728.2	809
06/24/2014 08:19	10.2	728.2	808
06/24/2014 08:20	10.2	728.2	807
06/24/2014 08:21	10.2	728.2	807
06/24/2014 08:22	10.3	728.2	806
06/24/2014 08:23	10.2	728.2	806
06/24/2014 08:24	10.2	728.2	809
06/24/2014 08:25	10.2	728.2	810
06/24/2014 08:26	10.2	728.2	810
06/24/2014 08:27	10.3	721.5	810
06/24/2014 08:28	10.4	720.2	807
06/24/2014 08:29	10.3	720.2	808
06/24/2014 08:30	10.4	720.2	807
06/24/2014 08:31	10.2	720.2	805
06/24/2014 08:32	10.2	720.2	805
06/24/2014 08:33	10.2	720.2	805
06/24/2014 08:34	10.2	720.2	807
06/24/2014 08:35	10.1	720.2	807
06/24/2014 08:36	10.1	720.2	808
06/24/2014 08:37	10.2	720.2	809
06/24/2014 08:38	10.2	720.2	809
06/24/2014 08:39	10.3	720.2	807
06/24/2014 08:40	10.4	720.2	807
06/24/2014 08:41	10.3	720.2	806
06/24/2014 08:42	10.2	726.9	805
06/24/2014 08:43	10.2	728.2	807
06/24/2014 08:44	10.2	728.2	808
06/24/2014 08:45	10.1	728.2	807
06/24/2014 08:46	10.2	728.2	807
06/24/2014 08:47	10.3	728.2	810
	10.2	725.4	807.8

Date/Time	UNIT2 CO2PCTC Value	UNIT2 COALFLOW Value	UNIT2 UNITLOAD Value
06/24/2014 09:53	10.4	719.8	806
06/24/2014 09:54	10.5	723.8	808
06/24/2014 09:55	10.5	727.8	810
06/24/2014 09:56	10.4	727.8	811
06/24/2014 09:57	10.5	719.7	811
06/24/2014 09:58	10.6	719.7	807
06/24/2014 09:59	10.6	719.7	805
06/24/2014 10:00	9.1	721.1	804
06/24/2014 10:01	8.6	727.8	805
06/24/2014 10:02	0.5	727.8	807
06/24/2014 10:03	5.3	727.8	809
06/24/2014 10:04	9.9	723.8	811
06/24/2014 10:05	10.2	715.7	810
06/24/2014 10:06	10.3	711.6	807
06/24/2014 10:07	10.4	711.6	804
06/24/2014 10:08	10.4	711.6	805
06/24/2014 10:09	10.3	711.6	805
06/24/2014 10:10	10.1	711.6	805
06/24/2014 10:11	10.3	711.6	805
06/24/2014 10:12	10.4	711.6	805
06/24/2014 10:13	10.4	711.6	805
06/24/2014 10:14	10.4	711.6	807
06/24/2014 10:15	10.4	711.6	808
06/24/2014 10:16	10.4	711.6	807
06/24/2014 10:17	10.5	713.0	805
06/24/2014 10:18	10.2	719.6	804
06/24/2014 10:19	9.2	719.6	805
06/24/2014 10:20	0.4	719.6	808
06/24/2014 10:21	0.1	719.6	810
06/24/2014 10:22	0.1	719.6	809
06/24/2014 10:23	0.1	719.6	809
06/24/2014 10:24	0.0	719.6	808
06/24/2014 10:25	0.0	719.6	810
06/24/2014 10:26	0.0	719.6	811
06/24/2014 10:27	0.0	719.6	811
06/24/2014 10:28	0.0	719.6	810
06/24/2014 10:29	0.0	719.6	808
06/24/2014 10:30	0.0	719.6	806
06/24/2014 10:31	0.0	719.6	805
06/24/2014 10:32	0.0	726.4	805
06/24/2014 10:33	0.0	727.7	807
06/24/2014 10:34	0.0	727.7	807
06/24/2014 10:35	0.0	727.7	806
06/24/2014 10:36	0.0	727.7	807
06/24/2014 10:37	0.0	727.7	809

U2 Run 2

06/24/2014 10:38	0.0	727.7	810
06/24/2014 10:39	0.0	727.7	809
06/24/2014 10:40	0.0	727.7	808
06/24/2014 10:41	0.0	727.7	809
06/24/2014 10:42	0.0	727.7	809
06/24/2014 10:43	8.0	727.7	809
06/24/2014 10:44	18.3	727.7	808
06/24/2014 10:45	18.4	727.7	809
06/24/2014 10:46	18.4	727.7	810
06/24/2014 10:47	18.4	727.7	810
06/24/2014 10:48	18.5	727.7	810
06/24/2014 10:49	18.5	727.7	810
06/24/2014 10:50	18.5	727.7	809
06/24/2014 10:51	4.9	727.7	809
06/24/2014 10:52	0.1	727.7	808
06/24/2014 10:53	1.5	727.7	808
06/24/2014 10:54	10.0	727.7	809
06/24/2014 10:55	11.2	723.6	811
06/24/2014 10:56	11.4	716.9	811
06/24/2014 10:57	11.3	711.5	809
Avg.	6.9	721.6	807.9

Date/Time	UNIT2 CO2PCTC Value	UNIT2 COALFLOW Value	UNIT2 UNITLOAD Value
06/24/2014 11:09	10.7	711.5	806
06/24/2014 11:10	10.7	714.1	805
06/24/2014 11:11	10.7	719.5	805
06/24/2014 11:12	10.7	719.5	805
06/24/2014 11:13	10.6	719.5	808
06/24/2014 11:14	10.6	719.5	809
06/24/2014 11:15	10.6	719.5	810
06/24/2014 11:16	10.6	719.5	811
06/24/2014 11:17	10.7	719.5	810
06/24/2014 11:18	10.7	719.5	809
06/24/2014 11:19	10.8	719.5	808
06/24/2014 11:20	10.8	719.5	807
06/24/2014 11:21	10.8	719.5	806
06/24/2014 11:22	10.8	719.5	807
06/24/2014 11:23	10.8	719.5	807
06/24/2014 11:24	10.8	712.8	806
06/24/2014 11:25	10.8	711.5	805
06/24/2014 11:26	10.8	711.5	805
06/24/2014 11:27	10.7	712.9	804
06/24/2014 11:28	10.7	719.6	805
06/24/2014 11:29	10.8	719.6	807
06/24/2014 11:30	10.7	719.6	808
06/24/2014 11:31	10.7	719.6	809
06/24/2014 11:32	10.8	719.6	810
06/24/2014 11:33	10.9	716.9	811
06/24/2014 11:34	10.9	711.6	808
06/24/2014 11:35	10.9	711.6	808
06/24/2014 11:36	10.9	711.6	809
06/24/2014 11:37	10.9	711.6	808
06/24/2014 11:38	10.7	711.6	806
06/24/2014 11:39	10.9	711.6	807
06/24/2014 11:40	10.8	711.6	806
06/24/2014 11:41	10.7	711.6	806
06/24/2014 11:42	10.8	711.6	805
06/24/2014 11:43	10.8	711.6	805
06/24/2014 11:44	10.8	719.6	805
06/24/2014 11:45	10.8	719.6	806
06/24/2014 11:46	10.7	719.6	808
06/24/2014 11:47	10.7	719.6	810
06/24/2014 11:48	10.8	719.6	809
06/24/2014 11:49	10.8	719.6	808
06/24/2014 11:50	10.9	719.6	809
06/24/2014 11:51	10.9	719.6	810
06/24/2014 11:52	10.8	719.6	810
06/24/2014 11:53	10.8	719.6	809

U2 Run 3

06/24/2014 11:54	10.9	719.6	809
06/24/2014 11:55	10.9	719.6	808
06/24/2014 11:56	10.8	719.6	808
06/24/2014 11:57	10.8	719.6	807
06/24/2014 11:58	10.8	719.6	805
06/24/2014 11:59	10.7	719.6	806
06/24/2014 12:00	10.7	719.6	808
06/24/2014 12:01	10.7	719.6	808
06/24/2014 12:02	10.6	719.6	809
06/24/2014 12:03	10.8	719.6	809
06/24/2014 12:04	10.9	719.6	810
06/24/2014 12:05	10.9	714.3	810
06/24/2014 12:06	10.9	711.6	809
06/24/2014 12:07	10.9	711.6	809
06/24/2014 12:08	11.0	711.6	808
06/24/2014 12:09	10.8	711.6	806
06/24/2014 12:10	10.8	711.6	806
06/24/2014 12:11	10.8	711.6	804
06/24/2014 12:12	10.7	717.0	804
06/24/2014 12:13	10.7	719.7	806
Avg.	10.8	716.8	807.4

Unit 3

Date/Time	UNIT3 CO2PCTC Value	UNIT3 COALFLOW Value	UNIT3 UNITLOAD Value
06/11/2014 10:20	11.0	728.5	807
06/11/2014 10:21	11.0	728.5	809
06/11/2014 10:22	11.0	727.1	812
06/11/2014 10:23	10.9	720.4	811
06/11/2014 10:24	10.9	720.4	807
06/11/2014 10:25	11.0	720.4	802
06/11/2014 10:26	11.0	727.2	803
06/11/2014 10:27	10.9	728.6	804
06/11/2014 10:28	10.8	735.3	805
06/11/2014 10:29	10.8	736.7	808
06/11/2014 10:30	10.8	736.7	810
06/11/2014 10:31	10.8	736.7	811
06/11/2014 10:32	10.9	736.7	811
06/11/2014 10:33	10.9	736.7	807
06/11/2014 10:34	10.9	736.7	806
06/11/2014 10:35	10.9	736.7	807
06/11/2014 10:36	10.9	736.7	809
06/11/2014 10:37	10.8	734.0	810
06/11/2014 10:38	10.8	728.6	809
06/11/2014 10:39	10.8	728.6	809
06/11/2014 10:40	10.8	728.6	809
06/11/2014 10:41	10.8	728.6	806
06/11/2014 10:42	10.7	728.6	805
06/11/2014 10:43	10.7	728.6	804
06/11/2014 10:44	10.6	728.6	804
06/11/2014 10:45	10.6	728.6	804
06/11/2014 10:46	10.6	728.6	805
06/11/2014 10:47	10.6	728.6	806
06/11/2014 10:48	10.6	728.6	806
06/11/2014 10:49	10.6	728.6	806
06/11/2014 10:50	10.6	728.6	805
06/11/2014 10:51	10.6	728.6	805
06/11/2014 10:52	10.7	728.6	806
06/11/2014 10:53	10.7	728.6	809
06/11/2014 10:54	10.8	728.6	810
06/11/2014 10:55	10.8	728.6	809
06/11/2014 10:56	10.8	728.6	808
06/11/2014 10:57	10.8	728.6	807
06/11/2014 10:58	10.8	728.6	806
06/11/2014 10:59	10.7	728.6	807
06/11/2014 11:00	10.8	728.6	808
06/11/2014 11:01	10.8	720.5	807
06/11/2014 11:02	10.8	720.5	805
06/11/2014 11:03	10.8	720.5	806
06/11/2014 11:04	10.8	720.5	805

U3 Run 1

06/11/2014 11:05	10.8	720.5	804
06/11/2014 11:06	10.8	727.2	804
06/11/2014 11:07	10.8	728.5	806
06/11/2014 11:08	10.8	728.5	806
06/11/2014 11:09	10.7	728.5	807
06/11/2014 11:10	10.8	728.5	808
06/11/2014 11:11	10.8	728.5	810
06/11/2014 11:12	10.8	728.5	810
06/11/2014 11:13	10.8	728.5	810
06/11/2014 11:14	10.9	728.5	809
06/11/2014 11:15	10.9	728.5	807
06/11/2014 11:16	10.9	728.5	806
06/11/2014 11:17	10.8	728.5	806
06/11/2014 11:18	10.8	728.5	805
06/11/2014 11:19	10.8	728.5	806
06/11/2014 11:20	10.9	728.5	807
06/11/2014 11:21	10.8	728.5	807
06/11/2014 11:22	10.8	728.5	805
06/11/2014 11:23	10.8	728.5	804
06/11/2014 11:24	10.9	728.5	805
06/11/2014 11:25	10.8	728.5	807
06/11/2014 11:26	10.7	728.5	808
06/11/2014 11:27	10.8	728.5	811
06/11/2014 11:28	10.8	728.5	812
06/11/2014 11:29	10.8	720.5	812
06/11/2014 11:30	10.9	712.4	809
06/11/2014 11:31	11.0	712.4	805
06/11/2014 11:32	11.0	713.7	802
06/11/2014 11:33	11.0	721.7	802
06/11/2014 11:34	10.8	728.5	804
06/11/2014 11:35	10.7	728.5	805
06/11/2014 11:36	10.7	728.5	806
06/11/2014 11:37	10.8	728.5	807
06/11/2014 11:38	10.8	728.5	808
06/11/2014 11:39	10.8	728.5	808
06/11/2014 11:40	10.9	728.5	807
06/11/2014 11:41	10.8	728.5	808
06/11/2014 11:42	10.8	728.5	809
06/11/2014 11:43	10.8	728.5	809
06/11/2014 11:44	10.8	728.5	810
06/11/2014 11:45	10.9	728.5	811
06/11/2014 11:46	10.8	728.5	810
06/11/2014 11:47	10.7	728.5	809
06/11/2014 11:48	10.7	728.5	808
06/11/2014 11:49	10.7	728.5	806
06/11/2014 11:50	10.7	728.5	804
06/11/2014 11:51	10.7	728.5	805

06/11/2014 11:52	10.7	728.5	806	
06/11/2014 11:53	10.7	728.5	807	
06/11/2014 11:54	10.7	728.5	806	
06/11/2014 11:55	10.7	728.5	805	
06/11/2014 11:56	10.7	728.5	804	
06/11/2014 11:57	10.7	728.5	804	
06/11/2014 11:58	10.6	728.5	805	
06/11/2014 11:59	10.7	728.5	807	
06/11/2014 12:00	10.8	728.5	809	
06/11/2014 12:01	10.8	728.5	811	
06/11/2014 12:02	10.8	728.5	811	
06/11/2014 12:03	10.8	720.4	810	
06/11/2014 12:04	10.9	720.4	808	
06/11/2014 12:05	10.9	713.7	805	
06/11/2014 12:06	10.9	712.4	805	
06/11/2014 12:07	10.9	712.4	803	
06/11/2014 12:08	10.9	716.4	803	
06/11/2014 12:09	10.9	720.5	804	
06/11/2014 12:10	10.9	732.8	804	
06/11/2014 12:11	10.8	736.9	806	
06/11/2014 12:12	10.8	736.9	809	
06/11/2014 12:13	10.8	736.9	811	
06/11/2014 12:14	10.7	736.9	812	
06/11/2014 12:15	10.7	736.9	810	
06/11/2014 12:16	10.8	730.1	808	
06/11/2014 12:17	10.9	728.7	805	
06/11/2014 12:18	10.9	727.4	805	
06/11/2014 12:19	10.8	720.7	807	
06/11/2014 12:20	10.9	716.7	806	
06/11/2014 12:21	10.9	712.7	805	
06/11/2014 12:22	10.9	712.7	804	
06/11/2014 12:23	10.9	712.7	803	
06/11/2014 12:24	10.9	718.1	803	
06/11/2014 12:25	10.9	720.8	804	
06/11/2014 12:26	10.9	720.8	805	
Avg.	10.8	727.1	806.8	
06/11/2014 13:02	10.9	720.9	807	Unit 3 Run 2
06/11/2014 13:03	10.9	720.9	807	
06/11/2014 13:04	10.9	720.9	806	
06/11/2014 13:05	10.9	720.9	804	
06/11/2014 13:06	10.8	720.9	804	
06/11/2014 13:07	10.9	727.7	803	
06/11/2014 13:08	10.9	737.1	805	
06/11/2014 13:09	10.8	737.1	808	
06/11/2014 13:10	10.9	737.1	809	
06/11/2014 13:11	10.8	737.1	810	

06/11/2014 13:12	10.9	731.8	811
06/11/2014 13:13	10.9	729.1	810
06/11/2014 13:14	10.9	729.1	809
06/11/2014 13:15	11.0	729.1	807
06/11/2014 13:16	11.0	729.1	807
06/11/2014 13:17	10.9	729.1	806
06/11/2014 13:18	10.8	729.1	805
06/11/2014 13:19	10.7	729.1	804
06/11/2014 13:20	10.7	729.1	803
06/11/2014 13:21	10.7	734.5	803
06/11/2014 13:22	10.7	737.1	804
06/11/2014 13:23	10.6	737.1	807
06/11/2014 13:24	10.6	737.1	809
06/11/2014 13:25	10.6	735.8	811
06/11/2014 13:26	10.6	723.6	811
06/11/2014 13:27	10.6	714.2	808
06/11/2014 13:28	10.7	712.9	806
06/11/2014 13:29	10.8	712.9	802
06/11/2014 13:30	10.7	714.3	799
06/11/2014 13:31	10.6	726.6	799
06/11/2014 13:32	10.6	733.3	802
06/11/2014 13:33	10.6	737.4	804
06/11/2014 13:34	10.6	737.4	806
06/11/2014 13:35	10.6	737.4	810
06/11/2014 13:36	10.6	737.4	811
06/11/2014 13:37	10.6	729.3	809
06/11/2014 13:38	10.7	729.3	808
06/11/2014 13:39	10.7	721.3	806
06/11/2014 13:40	10.8	721.3	803
06/11/2014 13:41	10.7	721.3	802
06/11/2014 13:42	10.7	721.3	802
06/11/2014 13:43	10.7	721.3	802
06/11/2014 13:44	10.6	722.6	802
06/11/2014 13:45	10.6	729.3	804
06/11/2014 13:46	10.7	729.3	803
06/11/2014 13:47	10.6	729.3	802
06/11/2014 13:48	10.6	732.0	803
06/11/2014 13:49	10.7	737.3	804
06/11/2014 13:50	10.7	737.3	808
06/11/2014 13:51	10.7	730.6	809
06/11/2014 13:52	10.7	729.3	809
06/11/2014 13:53	10.8	729.3	807
06/11/2014 13:54	10.9	724.0	808
06/11/2014 13:55	10.9	721.3	806
06/11/2014 13:56	10.8	721.3	803
06/11/2014 13:57	10.8	721.3	801
06/11/2014 13:58	10.8	721.3	802

06/11/2014 13:59	10.8	721.3	802
06/11/2014 14:00	10.8	728.0	802
06/11/2014 14:01	10.7	732.0	802
06/11/2014 14:02	10.8	737.3	803
06/11/2014 14:03	10.8	737.3	806
06/11/2014 14:04	10.8	737.3	809
06/11/2014 14:05	10.8	729.2	808
06/11/2014 14:06	10.8	729.2	807
06/11/2014 14:07	10.9	723.8	808
06/11/2014 14:08	10.9	721.1	807
06/11/2014 14:09	10.9	721.1	805
06/11/2014 14:10	10.8	721.1	802
06/11/2014 14:11	10.8	721.1	802
06/11/2014 14:12	10.8	721.1	802
06/11/2014 14:13	10.8	721.1	802
06/11/2014 14:14	10.7	721.1	802
06/11/2014 14:15	10.9	726.6	802
06/11/2014 14:16	10.8	729.3	804
06/11/2014 14:17	10.9	729.3	805
06/11/2014 14:18	10.8	729.3	806
06/11/2014 14:19	10.8	729.3	807
06/11/2014 14:20	10.9	729.3	806
06/11/2014 14:21	10.9	729.3	807
06/11/2014 14:22	10.9	729.3	808
06/11/2014 14:23	10.9	729.3	807
06/11/2014 14:24	10.9	729.3	807
06/11/2014 14:25	10.9	729.3	807
06/11/2014 14:26	10.9	729.3	806
06/11/2014 14:27	10.9	729.3	806
06/11/2014 14:28	10.9	729.3	805
06/11/2014 14:29	10.8	729.3	805
06/11/2014 14:30	10.8	729.3	806
06/11/2014 14:31	10.8	729.3	806
06/11/2014 14:32	10.8	729.3	807
06/11/2014 14:33	10.8	729.3	806
06/11/2014 14:34	10.8	729.3	807
06/11/2014 14:35	10.9	729.3	807
06/11/2014 14:36	10.9	729.3	806
06/11/2014 14:37	10.8	729.3	805
06/11/2014 14:38	10.9	729.3	805
06/11/2014 14:39	10.8	729.3	805
06/11/2014 14:40	10.8	729.3	806
06/11/2014 14:41	10.8	729.3	806
06/11/2014 14:42	10.8	729.3	807
06/11/2014 14:43	10.8	729.3	807
06/11/2014 14:44	10.8	729.3	807
06/11/2014 14:45	10.7	729.3	807

06/11/2014 14:46	10.8	729.3	807	
06/11/2014 14:47	10.8	729.3	807	
06/11/2014 14:48	10.8	729.3	808	
06/11/2014 14:49	10.9	729.3	809	
06/11/2014 14:50	10.9	729.3	808	
06/11/2014 14:51	10.8	729.3	807	
06/11/2014 14:52	10.8	729.3	806	
06/11/2014 14:53	10.9	729.3	803	
06/11/2014 14:54	10.8	729.3	802	
06/11/2014 14:55	10.8	729.3	802	
06/11/2014 14:56	10.8	729.3	803	
06/11/2014 14:57	10.8	729.3	806	
06/11/2014 14:58	10.8	729.3	806	
06/11/2014 14:59	10.8	729.3	806	
06/11/2014 15:00	10.8	729.3	805	
06/11/2014 15:01	10.8	729.3	803	
06/11/2014 15:02	10.8	729.3	803	
06/11/2014 15:03	10.8	729.3	803	
06/11/2014 15:04	10.8	729.3	804	
06/11/2014 15:05	10.8	729.3	805	
06/11/2014 15:06	10.9	722.6	804	
06/11/2014 15:07	10.9	721.2	804	
06/11/2014 15:08	10.9	721.2	803	
Avg.	10.8	728.1	805.4	
06/11/2014 15:28	10.9	737.4	809	Unit 3 Run 3
06/11/2014 15:29	10.9	734.6	810	
06/11/2014 15:30	10.9	725.1	809	
06/11/2014 15:31	11.0	718.4	808	
06/11/2014 15:32	11.0	713.1	804	
06/11/2014 15:33	11.0	713.1	800	
06/11/2014 15:34	10.9	725.4	799	
06/11/2014 15:35	10.9	737.5	802	
06/11/2014 15:36	10.8	737.5	803	
06/11/2014 15:37	10.8	737.5	805	
06/11/2014 15:38	10.8	737.5	807	
06/11/2014 15:39	10.9	737.5	807	
06/11/2014 15:40	10.9	737.5	807	
06/11/2014 15:41	10.9	737.5	807	
06/11/2014 15:42	11.0	737.5	806	
06/11/2014 15:43	10.9	737.5	806	
06/11/2014 15:44	11.0	737.5	807	
06/11/2014 15:45	11.0	737.5	807	
06/11/2014 15:46	11.0	737.5	808	
06/11/2014 15:47	11.0	737.5	808	
06/11/2014 15:48	11.0	737.5	807	
06/11/2014 15:49	11.0	737.5	805	

06/11/2014 15:50	10.9	737.5	804
06/11/2014 15:51	11.0	737.5	803
06/11/2014 15:52	10.9	737.5	803
06/11/2014 15:53	10.9	737.5	802
06/11/2014 15:54	10.9	737.5	802
06/11/2014 15:55	10.9	737.5	803
06/11/2014 15:56	10.8	737.5	804
06/11/2014 15:57	10.8	737.5	805
06/11/2014 15:58	10.9	737.5	806
06/11/2014 15:59	10.9	737.5	807
06/11/2014 16:00	11.0	737.5	807
06/11/2014 16:01	10.9	730.8	807
06/11/2014 16:02	11.0	729.5	806
06/11/2014 16:03	11.0	729.5	806
06/11/2014 16:04	11.0	729.5	805
06/11/2014 16:05	11.0	729.5	804
06/11/2014 16:06	10.9	729.5	804
06/11/2014 16:07	10.9	729.5	804
06/11/2014 16:08	10.9	729.5	804
06/11/2014 16:09	10.9	736.2	803
06/11/2014 16:10	10.9	737.5	805
06/11/2014 16:11	10.9	737.5	807
06/11/2014 16:12	10.9	737.5	807
06/11/2014 16:13	10.9	737.5	807
06/11/2014 16:14	11.0	737.5	804
06/11/2014 16:15	11.0	737.5	802
06/11/2014 16:16	10.9	737.5	802
06/11/2014 16:17	10.9	737.5	802
06/11/2014 16:18	10.8	737.5	803
06/11/2014 16:19	10.8	737.5	804
06/11/2014 16:20	10.8	737.5	804
06/11/2014 16:21	10.8	737.5	803
06/11/2014 16:22	10.9	737.5	803
06/11/2014 16:23	10.9	737.5	803
06/11/2014 16:24	10.9	737.5	806
06/11/2014 16:25	10.9	737.5	808
06/11/2014 16:26	10.9	737.5	809
06/11/2014 16:27	10.9	737.5	808
06/11/2014 16:28	10.9	737.5	806
06/11/2014 16:29	10.9	737.5	802
06/11/2014 16:30	10.9	737.5	802
06/11/2014 16:31	10.9	737.5	803
06/11/2014 16:32	10.7	737.5	805
06/11/2014 16:33	10.6	737.5	807
06/11/2014 16:34	10.7	737.5	808
06/11/2014 16:35	10.7	737.5	807
06/11/2014 16:36	10.7	737.5	804

06/11/2014 16:37	10.7	737.5	804
06/11/2014 16:38	10.8	737.5	804
06/11/2014 16:39	10.7	737.5	804
06/11/2014 16:40	10.7	737.5	806
06/11/2014 16:41	10.8	737.5	805
06/11/2014 16:42	10.8	737.5	805
06/11/2014 16:43	10.8	737.5	805
06/11/2014 16:44	10.7	737.5	805
06/11/2014 16:45	10.7	737.5	806
06/11/2014 16:46	10.8	737.5	806
06/11/2014 16:47	10.9	730.8	804
06/11/2014 16:48	10.9	729.5	803
06/11/2014 16:49	10.9	729.5	802
06/11/2014 16:50	10.9	729.5	803
06/11/2014 16:51	10.8	729.5	804
06/11/2014 16:52	10.8	729.5	804
06/11/2014 16:53	10.8	729.5	803
06/11/2014 16:54	10.9	730.8	801
06/11/2014 16:55	10.9	737.6	802
06/11/2014 16:56	10.9	737.6	804
06/11/2014 16:57	10.9	737.6	805
06/11/2014 16:58	10.9	737.6	805
06/11/2014 16:59	11.0	737.6	805
06/11/2014 17:00	11.0	737.6	804
06/11/2014 17:01	11.0	737.6	806
06/11/2014 17:02	10.9	738.9	806
06/11/2014 17:03	10.9	745.6	805
06/11/2014 17:04	10.8	745.6	806
06/11/2014 17:05	10.9	745.6	808
06/11/2014 17:06	10.9	745.6	809
06/11/2014 17:07	10.9	740.2	809
06/11/2014 17:08	11.0	737.5	807
06/11/2014 17:09	11.1	737.5	806
06/11/2014 17:10	11.1	737.5	804
06/11/2014 17:11	11.0	737.5	802
06/11/2014 17:12	10.9	737.5	801
06/11/2014 17:13	10.9	737.5	803
06/11/2014 17:14	10.9	737.5	806
06/11/2014 17:15	10.9	737.5	808
06/11/2014 17:16	10.9	737.5	807
06/11/2014 17:17	10.9	737.5	807
06/11/2014 17:18	10.9	737.5	806
06/11/2014 17:19	10.9	737.5	803
06/11/2014 17:20	10.9	737.5	803
06/11/2014 17:21	10.9	737.5	803
06/11/2014 17:22	10.9	737.5	804
06/11/2014 17:23	10.9	737.5	803

06/11/2014 17:24	10.9	737.5	803
06/11/2014 17:25	10.9	737.5	803
06/11/2014 17:26	10.9	737.5	805
06/11/2014 17:27	10.9	737.5	807
06/11/2014 17:28	10.9	737.5	807
06/11/2014 17:29	10.9	737.5	806
06/11/2014 17:30	10.9	737.5	804
06/11/2014 17:31	11.0	737.5	803
06/11/2014 17:32	11.0	737.5	803
06/11/2014 17:33	11.0	737.5	803
06/11/2014 17:34	11.0	737.5	804
06/11/2014 17:35	11.0	737.5	805
Avg.	10.9	736.1	804.9

APPENDIX 3
LABORATORY ANALYSIS

Particulate

CATALYST AIR MANAGEMENT, INC
ANALYTICAL SUMMARY
SRP-NGS Unit 1

6/22-23/14

ACETONE BLANK

SAMPLE ID	VOLUME ml	BEAKER WEIGHT, g INITIAL	BEAKER WEIGHT, g FINAL	FINAL-INI g
Blank	200	103.5902	103.5902	0.0000

LOT NUMBER = 135789
DENSITY = 0.7848 g/ml

ACETONE BLANK = 0.00E+00 g/g

PARTICULATE WEIGHT

SAMPLE ID	ACETONE VOLUME ml	BEAKER WEIGHT g INITIAL	BEAKER WEIGHT g FINAL	FINAL-INI g	FILTER WEIGHT INITIAL	FINAL	FINAL-INI g	ACETONE PLUS FILTER g	ACETONE WASH BLANK g	MAXIMUM ALLOWABLE BLANK g	TOTAL g	mg
Run 1	150	106.9423	106.9463	0.0040	0.3601	0.3660	0.0059	0.0099	0.0000	0.0012	0.0099	9.9
Run 2	150	97.2999	97.3045	0.0046	0.3593	0.3668	0.0075	0.0121	0.0000	0.0012	0.0121	12.1
Run 3	175	108.6282	108.6354	0.0072	0.3597	0.3649	0.0052	0.0124	0.0000	0.0014	0.0124	12.4

CATALYST AIR MANAGEMENT, INC
ANALYTICAL SUMMARY
SRP - NGS - Unit 2

6/24-25/2014

ACETONE BLANK

SAMPLE ID	VOLUME ml	BEAKER WEIGHT, g INITIAL	BEAKER WEIGHT, g FINAL	FINAL-INI g
Blank	200	103.5902	103.5902	0.0000

LOT NUMBER = 135789
DENSITY = 0.7848 g/ml

ACETONE BLANK = 0.00E+00 g/g

PARTICULATE WEIGHT

SAMPLE ID	ACETONE VOLUME ml	BEAKER WEIGHT g INITIAL	BEAKER WEIGHT g FINAL	FINAL-INI g	FILTER WEIGHT INITIAL	FINAL	FINAL-INI g	ACETONE PLUS FILTER g	ACETONE WASH BLANK g	MAXIMUM ALLOWABLE BLANK g	TOTAL g	mg
Run 1	175	109.3791	109.3882	0.0091	0.3573	0.3696	0.0123	0.0214	0.0000	0.0014	0.0214	21.4
Run 2	175	103.8049	103.8103	0.0054	0.3573	0.3701	0.0128	0.0182	0.0000	0.0014	0.0182	18.2
Run 3 *	175	97.5612	97.5670	0.0058	0.3567	0.3672	0.0105	0.0163	0.0000	0.0014	0.0163	16.3

CATALYST AIR MANAGEMENT, INC
ANALYTICAL SUMMARY
SRP NGS - Unit 3

6/11-13/14

ACETONE BLANK

SAMPLE ID	VOLUME ml	BEAKER WEIGHT, g INITIAL	BEAKER WEIGHT, g FINAL	FINAL-INI g
Blank	200	109.3778	109.3780	0.0002

LOT NUMBER = 135789
DENSITY = 0.7848 g/ml

ACETONE BLANK = 1.27E-06 g/g

PARTICULATE WEIGHT

SAMPLE ID	ACETONE VOLUME ml	BEAKER WEIGHT g INITIAL	BEAKER WEIGHT g FINAL	FINAL-INI g	FILTER WEIGHT INITIAL	FINAL	FINAL-INI g	ACETONE PLUS FILTER g	ACETONE WASH BLANK g	MAXIMUM ALLOWABLE BLANK g	TOTAL g	mg
Run 1	200	106.9423	106.9612	0.0189	0.3543	0.3700	0.0157	0.0346	0.0002	0.0016	0.0344	34.4
Run 2	150	108.6273	108.6532	0.0259	0.3556	0.3699	0.0143	0.0402	0.0002	0.0012	0.0400	40.0
Run 3	200	101.6760	101.7046	0.0286	0.3542	0.3695	0.0153	0.0439	0.0002	0.0016	0.0437	43.7

Coal

NAVAJO GENERATING STATION
Coal Analysis Report

NGS-ID: 40611141 | **Analyst:** AKS
Sample ID: 06-AR-11 | **Date Sampled:** 11-Jun-14
Date Analyzed: 12-Jun-14

8-Mesh sample Weight (in pounds)

AR **A:** 24 **B:** 26 **C:** 26 **D:** 28 **Total:** 104 lbs

Air dry Moisture

Wt. Pan Only	2021.8	
Wt. Sample + Pan	3106.7	7.61 %
Wt. Dry sample + Pan	3024.1	

Residual Moisture ..... 5.66 %

Total Moisture ..... 12.84 %

DryAsh :

Wt. Crucible Only:	20.2719	
Wt. Coal + crucible:	21.2882	10.08 %
Ash wt + crucible:	20.3685	

Sulfur

Sulfur(AsDet'd):	Sulfur, Dry:
0.67 %	0.71 %

BTU

BTU/lb as Determined:	11,625.0	Btu, as Rec'd:	10,740
Sample Wt:		Btu/lb (Dry) :	12,322
Fuse Wire correction:			
Acid Correction:		Btu (MAF):	13,703

Comments:

2nd dry ash = 10.10%
Coal grind uniform

NAVAJO GENERATING STATION
Coal Analysis Report

NGS-ID:	40612141	**Analyst:**	AKS
Sample ID:	06-AR-12	**Date Sampled:**	12-Jun-14
		Date Analyzed:	13-Jun-14

8-Mesh sample Weight (in pounds)

AR **A:** 28 **B:** 25 **C:** 25 **D:** 30 **Total:** 108 lbs

Air dry Moisture

Wt. Pan Only	1628.1	
Wt. Sample + Pan	2869.3	7.54 %
Wt. Dry sample + Pan	2775.7	

Residual Moisture ..... 5.37 %

Total Moisture ..... 12.51 %

DryAsh :

Wt. Crucible Only:	19.4020	
Wt. Coal + crucible:	20.4062	12.18 %
Ash wt + crucible:	19.5177	

Sulfur

Sulfur(AsDet'd):	Sulfur, Dry:
0.63 %	0.67 %

BTU

BTU/lb as Determined:	11,383.0	Btu, as Rec'd:	10,525
Sample Wt:		Btu/lb (Dry) :	12,029
Fuse Wire correction:			
Acid Correction:		Btu (MAF):	13,697

Comments:

2nd dry ash = 12.09%
Coal grind uniform

NAVAJO GENERATING STATION
Coal Analysis Report

NGS-ID:	40613141	**Analyst:**	CDM
Sample ID:	06-AR-13	**Date Sampled:**	13-Jun-14
		Date Analyzed:	16-Jun-14

8-Mesh sample Weight (in pounds)

AR **A:** 26 **B:** 29 **C:** 19 **D:** 28 **Total:** 102 lbs

Air dry Moisture

Wt. Pan Only	1628.3	
Wt. Sample + Pan	2686.9	6.72 %
Wt. Dry sample + Pan	2615.8	

Residual Moisture ..... 6.04 %

Total Moisture ..... 12.35 %

DryAsh :

Wt. Crucible Only:	20.2719	
Wt. Coal + crucible:	21.2898	12.42 %
Ash wt + crucible:	20.3907	

Sulfur

Sulfur(AsDet'd):	Sulfur, Dry:
0.67 %	0.71 %

BTU

BTU/lb as Determined:	11,274.0	Btu, as Rec'd:	10,517
Sample Wt:	0.0000	Btu/lb (Dry) :	11,999
Fuse Wire correction:	0.00		
Acid Correction:	0.00	Btu (MAF):	13,701

Comments:

2nd dry ash=12.38
coal uniform medium grind

NAVAJO GENERATING STATION
Coal Analysis Report

NGS-ID:	40622141	**Analyst:**	FRF
Sample ID:	06-AR-22	**Date Sampled:**	22-Jun-14
		Date Analyzed:	24-Jun-14

8-Mesh sample Weight (in pounds)

AR **A:** 22 **B:** 23 **C:** 28 **D:** 29 **Total:** 102 lbs

Air dry Moisture

Wt. Pan Only	2015.0	
Wt. Sample + Pan	3271.0	6.35 %
Wt. Dry sample + Pan	3191.3	

Residual Moisture ..... 6.54 %

Total Moisture ..... 12.47 %

DryAsh :

Wt. Crucible Only:	17.8841	
Wt. Coal + crucible:	18.8850	10.51 %
Ash wt + crucible:	17.9824	

Sulfur

Sulfur(AsDet'd):	Sulfur, Dry:
0.72 %	0.77 %

BTU

BTU/lb as Determined:	11,485.2	Btu, as Rec'd:	10,756
Sample Wt:	1.0004	Btu/lb (Dry) :	12,289
Fuse Wire correction:	12.65	Btu (MAF):	13,732
Acid Correction:	17.20		

Comments:

2nd Dry Ash= 10.45 %
Coal grind uniform

NAVAJO GENERATING STATION
Coal Analysis Report

NGS-ID:	40623141	**Analyst:**	FRF
Sample ID:	06-AR-23	**Date Sampled:**	23-Jun-14
		Date Analyzed:	24-Jun-14

8-Mesh sample Weight (in pounds)

AR **A:** 23 **B:** 09 **C:** 13 **D:** 27 **Total:** 72 lbs

Air dry Moisture

Wt. Pan Only	2027.4	
Wt. Sample + Pan	3326.3	6.67 %
Wt. Dry sample + Pan	3239.6	

Residual Moisture ..... 6.38 %

Total Moisture ..... 12.63 %

DryAsh :

Wt. Crucible Only:	20.7936	
Wt. Coal + crucible:	21.7937	11.31 %
Ash wt + crucible:	20.8995	

Sulfur

Sulfur(AsDet'd):	Sulfur, Dry:
0.77 %	0.82 %

BTU

BTU/lb as Determined:	11,396.4	Btu, as Rec'd:	10,636
Sample Wt:	1.0027	Btu/lb (Dry) :	12,173
Fuse Wire correction:	17.25		
Acid Correction:	17.34	Btu (MAF):	13,725

Comments:

2nd Dry Ash= 11.34 %
Coal grind uniform

NAVAJO GENERATING STATION
Coal Analysis Report

NGS-ID:	40624141	**Analyst:**	FRF
Sample ID:	06-AR-24	**Date Sampled:**	24-Jun-14
		Date Analyzed:	25-Jun-14

8-Mesh sample Weight (in pounds)

AR **A:** 34 **B:** 21 **C:** 06 **D:** 09 **Total:** 70 lbs

Air dry Moisture

Wt. Pan Only	2021.7	
Wt. Sample + Pan	3293.9	6.32 %
Wt. Dry sample + Pan	3213.5	

Residual Moisture ..... 6.50 %

Total Moisture ..... 12.41 %

DryAsh :

Wt. Crucible Only:	21.3275	
Wt. Coal + crucible:	22.3280	10.58 %
Ash wt + crucible:	21.4265	

Sulfur

Sulfur(AsDet'd):	Sulfur, Dry:
0.71 %	0.76 %

BTU

BTU/lb as Determined:	11,468.9	Btu, as Rec'd:	10,744
Sample Wt:	1.0074	Btu/lb (Dry) :	12,266
Fuse Wire correction:	17.48		
Acid Correction:	17.77	Btu (MAF):	13,718

Comments:

2nd Dry Ash= 10.61 %
Coal grind uniform

NAVAJO GENERATING STATION
Coal Analysis Report

NGS-ID:	40625141	**Analyst:**	FRF
Sample ID:	06-AR-25	**Date Sampled:**	25-Jun-14
		Date Analyzed:	26-Jun-14

8-Mesh sample Weight (in pounds)

AR **A:** 15 **B:** 30 **C:** 30 **D:** 29 **Total:** 104 lbs

Air dry Moisture

Wt. Pan Only	2014.6	
Wt. Sample + Pan	3289.3	6.32 %
Wt. Dry sample + Pan	3208.7	

Residual Moisture ..... 6.52 %

Total Moisture ..... 12.43 %

DryAsh :

Wt. Crucible Only:	18.9329	
Wt. Coal + crucible:	19.9364	11.05 %
Ash wt + crucible:	19.0366	

Sulfur

Sulfur(AsDet'd):	Sulfur, Dry:
0.74 %	0.80 %

BTU

BTU/lb as Determined:	11,374.2	Btu, as Rec'd:	10,655
Sample Wt:	0.9998	Btu/lb (Dry) :	12,168
Fuse Wire correction:	18.86		
Acid Correction:	17.06	Btu (MAF):	13,680

Comments:

2nd Dry Ash= 11.10 %
Coal grind uniform

APPENDIX 4
REFERENCE METHOD QUALITY ASSURANCE

Isokinetic Sampling Equipment

Catalyst Air Management, Inc.

METER BOX NUMBER: **020**
DATE: 05/28/14
CALIBRATED BY: J.Boys

BENCH METER CALIBRATION FACTOR: 0.998

Orifice Manometer Setting (ΔH) In. H_2O	Standard Test Meter Start: End:	(V_w) ft^3	Dry Gas Meter Start: End:	(V_d) ft^3	Standard Test Meter (T_w) °F	Dry Gas Meter Inlet (T_{di}) °F	Outlet (T_{do}) °F	Average (T_d) °F	Barometric Pressure (P_b) in. of Hg	Time (Time) min.	Y_i	ΔH@i	Q_m	K_m
0.50	900.391	**5.394**	981.516	**5.313**	66.5	68.0	68.0	68.0	29.20	12.50	**1.01**	**1.60**	0.425	0.761
	905.785		986.829											
1.00	930.117	**5.338**	11.045	**5.309**	69.0	72.5	71.0	71.8	29.20	9.00	**1.01**	**1.67**	0.589	0.744
	935.455		16.354											
2.00	911.575	**5.387**	992.644	**5.335**	69.0	71.5	69.0	70.3	29.20	6.50	**1.01**	**1.72**	0.819	0.733
	916.962		997.979											
3.00	917.352	**5.528**	998.368	**5.483**	69.0	72.5	69.5	71.0	29.20	5.50	**1.00**	**1.75**	0.994	0.726
	922.880		1003.851											
4.00	924.058	**5.727**	1005.016	**5.691**	69.0	74.5	70.0	72.3	29.20	5.00	**1.00**	**1.80**	1.133	0.716
	929.785		1010.707											

Average: **1.01** **1.71**

FORMULAS

$$Y_i = \frac{(V_w)(P_b)(T_d + 460)}{(V_d)\left(P_b + \frac{H}{13.6}\right)(T_w + 460)}$$

$$\Delta H@i = \frac{0.9244}{K_m^{\,2}}$$

$$K_m = Q_m \sqrt{\frac{(P_b)(29)}{(T_{do} + 460)(\Delta H)}}$$

$$Q_m = \frac{(V_d)(T_{do} + 460)}{(Time)(T_{do} + 460)}$$

Catalyst Air Management, Inc.

POST-TEST METER BOX CALIBRATION

METER BOX NUMBER: 020
DATE: 07/01/14
CALIBRATED BY: R.Derrera

PRETEST Y_i: 1.01
POST-TEST Y_i: 1.02
DIFFERENCE, % 1.81

BENCH METER CALIBRATION FACTOR: 0.998

Orifice Manometer Setting (ΔH) In. H_2O	Standard Test Meter Start: End:	(V_w) ft^3	Dry Gas Meter Start: End:	(V_d) ft^3	Standard Test Meter (T_w) °F	Dry Gas Meter Inlet (T_{di}) °F	Outlet (T_{do}) °F	Average (T_d) °F	Barometric Pressure (P_b) in. of Hg	Time (Time) min.	Y_i	ΔH@i	Q_m	K_m
1.90	278.412	**8.531**	548.684	**8.368**	72.0	79.0	77.0	78.0	29.10	10.00	**1.02**	**1.60**	0.835	0.760
	286.943		557.052											
1.90	286.943	**8.519**	557.052	**8.354**	73.0	80.0	77.0	78.5	29.10	10.00	**1.02**	**1.61**	0.833	0.758
	295.462		565.406											
1.90	295.462	**8.479**	565.406	**8.296**	74.0	80.0	78.0	79.0	29.10	10.00	**1.02**	**1.63**	0.828	0.752
	303.941		573.702											

Average: 1.02 1.62

FORMULAS

$$Y_i = \frac{(V_w)(P_b)(T_d + 460)}{(V_d)\left(P_b + \frac{H}{13.6}\right)(T_w + 460)}$$

$$\Delta H@i = \frac{0.9244}{K_m^{\,2}}$$

$$K_m = Q_m \sqrt{\frac{(P_b)(29)}{(T_{do} + 460)(\Delta H)}}$$

$$Q_m = \frac{(V_d)(T_{do} + 460)}{(Time)(T_{do} + 460)}$$

Catalyst Air Management Inc.

Type S Pitot Tube Inspection/Calibration

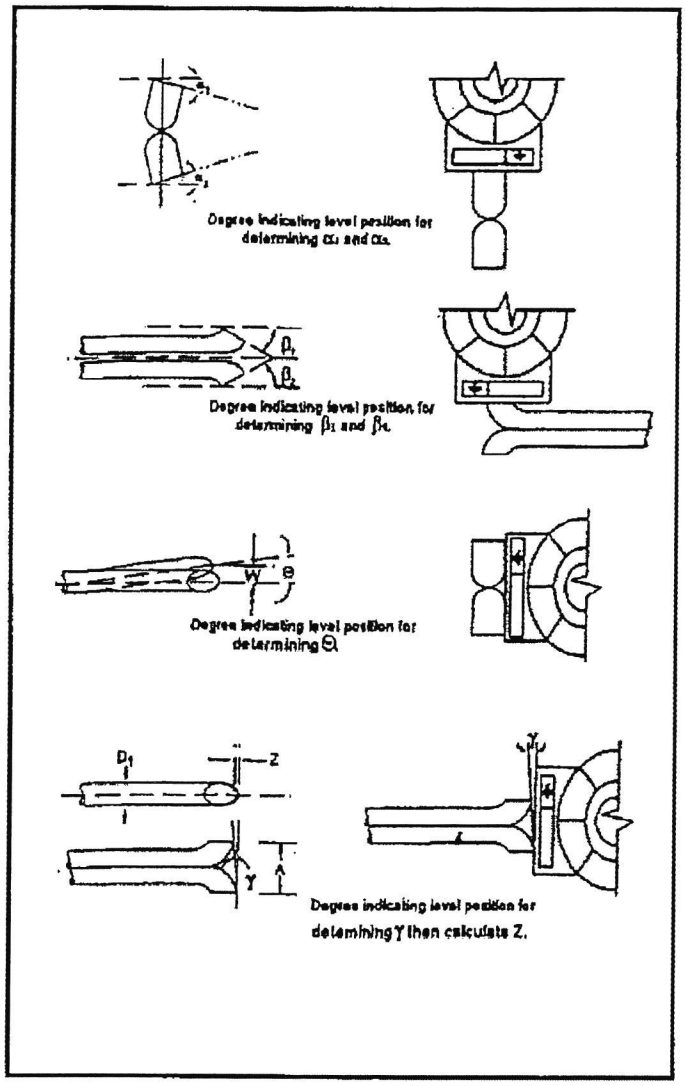

Level and Perpendicular?	yes
Obstructed?	no
Damaged?	no

α1 (-10° ≤ α_1 ≤ +10°)	0
α_2 (-10° ≤ α_2 ≤ +10°)	0
β1 (-5° ≤ β1 ≤ +5°)	3
β_2 (-5° ≤ β_2 ≤ +5°)	0
γ	1
θ	0

z = A tan γ (≤0.125")	0.0169
w = A tan Θ (≤0.03125")	0
D_t (3/16" ≤ D_t ≤ 3/8")	0.370
A	0.970

A/2D_t (1.05 ≤ P_A/D_t ≤ 1.5)	1.3108

QA/QC Check ✓
Completeness ✓ Legibility ✓ Accuracy ✓ Specifications ✓ Reasonableness ✓

Certification:
I certify that the Type S pitot tube/probe ID# CAM-10-01 meets or exceeds all specifications, criteria and/or applicable design features and is hereby assigned a pitot tube calibration factor Cp of 0.84.

Certified by: 6-5-14 6/6/14
Personnel (Signature/Date) Team Leader (Signature/Date)

Catalyst Air Management Inc. **Nozzle Calibration Form**

Client/Plant SRP / Navajo

Location Units 1, 2, 3 stacks

Date 6-9-14

Prepared By J Nicely

Nozzle # CAM-203

1st 0.240 2nd 0.240 3rd 0.240 AVG 0.240

Nozzle # _____

1st _____ 2nd _____ 3rd _____ AVG _____

Nozzle # _____

1st _____ 2nd _____ 3rd _____ AVG _____

Nozzle # _____

1st _____ 2nd _____ 3rd _____ AVG _____

Nozzle # _____

1st _____ 2nd _____ 3rd _____ AVG _____

Nozzle # _____

1st _____ 2nd _____ 3rd _____ AVG _____

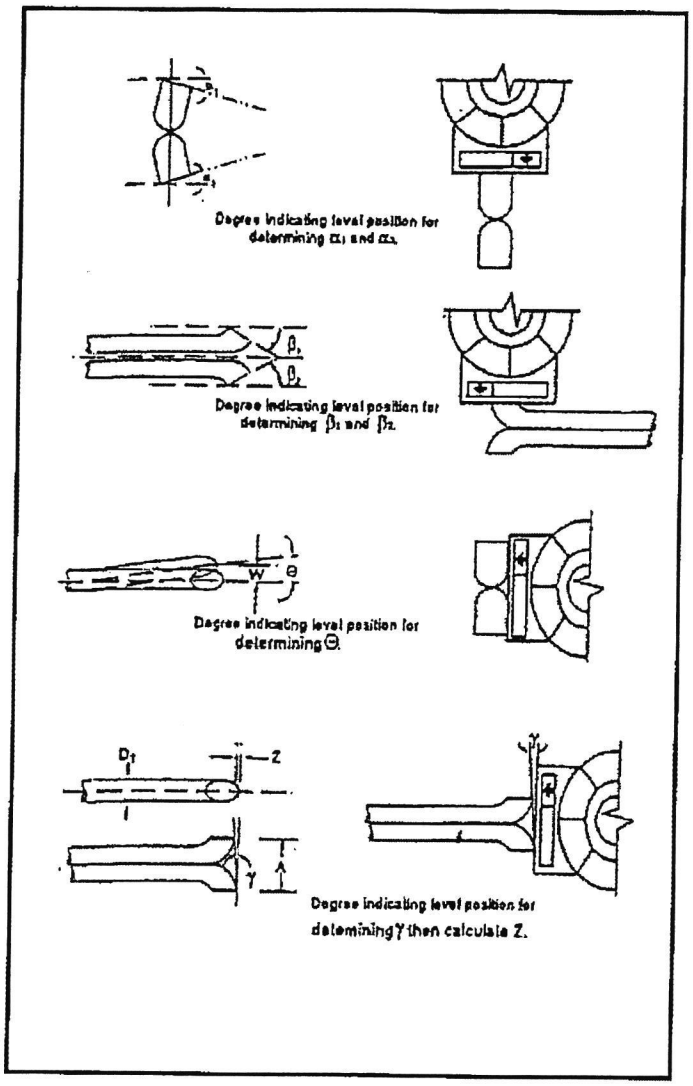

Level and Perpendicular?	YES
Obstructed?	NO
Damaged?	NO

α1 (-10° ≤ α1 ≤ +10°)	3
α2 (-10° ≤ α2 ≤ +10°)	1
β1 (-5° ≤ β1 ≤ +5°)	1
β2 (-5° ≤ β2 ≤ +5°)	2
γ	1
θ	0

z = A tan γ (≤0.125")	0.0160
w = A tan θ (≤0.03125")	0
Dt (3/16" ≤ Dt ≤ 3/8")	0.375
A	0.920

A/2Dt (1.05 ≤ PA/Dt ≤ 1.5)	1.2266

QA/QC Check
Completeness ✓ Legibility ✓ Accuracy ✓ Specifications ✓ Reasonableness ✓

Certification:
I certify that the Type S pitot tube/probe ID# CAM 4-23 meets or exceeds all specifications, criteria and/or applicable design features and is hereby assigned a pitot tube calibration factor Cp of 0.84.

Certified by: 6-5-14 Personnel (Signature/Date) 6/6/14 Team Leader (Signature/Date)

Catalyst Air Management Inc. **Nozzle Calibration Form**

Client/Plant SRP / Navajo

Location Units 1, 2, 3 stacks

Date 6-9-14

Prepared By J Nicely

Nozzle # CAM-203

1st 0.240 2nd 0.240 3rd 0.240 AVG 0.240

Nozzle # _____

1st _____ 2nd _____ 3rd _____ AVG _____

Nozzle # _____

1st _____ 2nd _____ 3rd _____ AVG _____

Nozzle # _____

1st _____ 2nd _____ 3rd _____ AVG _____

Nozzle # _____

1st _____ 2nd _____ 3rd _____ AVG _____

Nozzle # _____

1st _____ 2nd _____ 3rd _____ AVG _____

CATALYST AIR MANAGEMENT, INC.

K-TYPE THERMOCOUPLE CALIBRATION
Post Test Calibration Check
SRP/Navajo

Thermocouple No: **CAM-P14**
DATE: 7/3/2014
CALIBRATED BY: R.Derrera

AVG STACK TEMPERATURE: **118°**

Difference % Absolute	**0.3**
Acceptance Criteria %	1.5

Std Thermometer	118
Thermocouple	116
Difference	2

CATALYST AIR MANAGEMENT, INC.

K-TYPE THERMOCOUPLE CALIBRATION
Post Test Calibration Check
SRP/Navajo

Thermocouple No: **CAM-30**
DATE: 7/3/2014
CALIBRATED BY: R.Derrera

AVG STACK TEMPERATURE: **118°**

Difference % Absolute	**-0.3**
Acceptance Criteria %	1.5

Std Thermometer	118
Thermocouple	120
Difference	-2

CATALYST AIR MANAGEMENT, INC.

K-TYPE THERMOCOUPLE CALIBRATION
Post Test Calibration Check
SRP/Navajo

Thermocouple No:	**CAM-30**
DATE:	7/3/2014
CALIBRATED BY:	R.Derrera

AVG STACK TEMPERATURE:	**85°**

Difference % Absolute	**-0.4**
Acceptance Criteria %	1.5

Std Thermometer	85
Thermocouple	87
Difference	-2

CATALYST AIR MANAGEMENT, INC.

K-TYPE THERMOCOUPLE CALIBRATION
Post Test Calibration Check
SRP-Navajo 3

Thermocouple No: **CAM-20**
DATE: 7/3/2014
CALIBRATED BY: R.Derrera

AVG STACK TEMPERATURE: **117°**

Difference % Absolute	**0.2**
Acceptance Criteria %	1.5

Std Thermometer	120
Thermocouple	119
Difference	1

CATALYST AIR MANAGEMENT, INC.

K-TYPE THERMOCOUPLE CALIBRATION
Post Test Calibration Check
SRP-Navajo 3

Thermocouple No:	**CAM-20**
DATE:	7/3/2014
CALIBRATED BY:	R.Derrera

AVG STACK TEMPERATURE:	**85°**
Difference % Absolute	**0.2**
Acceptance Criteria %	1.5
Std Thermometer	85
Thermocouple	84
Difference	1

CATALYST AIR MANAGEMENT, INC

Barometer Calibration Check
SRP

DATE: 6/5/2014
CALIBRATED BY: Nicely

Hg in glass Barometer (in Hg)	29.94
Field Barometer (in Hg)	29.97
Difference	0.03

CATALYST AIR MANAGEMENT, INC

Balance Calibration Check:
SRP - NGS

Balance ID: CAM-FB-4
DATE: 6/9/2014
CALIBRATED BY: Nicely

Ohaus (200g)	200.00
Field Balance	200.00
Difference	0.00

Calibration Gas Certification Sheets

Airgas

CERTIFICATE OF BATCH ANALYSIS

NITROGEN - CEM-CAL ZERO

Part Number:	NI CZ15A	Reference Number:	40-400101831-1
Cylinder Analyzed:	CC252901	Cylinder Volume:	142.0 CF
Laboratory:	MID - Saint Louis SGL (SAP) - MO	Cylinder Pressure:	2000 PSIG
Analysis Date:	Oct 09, 2012	Valve Outlet:	580
Lot Number:	40-400101831-1		

Expiration Date: Oct 09, 2017

ANALYTICAL RESULTS

Component	Requested Purity	Certified Concentration
CARBON DIOXIDE	< 1.0 PPM	0.13 PPM
Moisture	< 1.0 PPM	0.235 PPM
NOx	< 0.1 PPM	< 0.1 PPM
SO2	< 0.1 PPM	< 0.1 PPM
THC	< 0.1 PPM	0.03 PPM
CARBON MONOXIDE	< 0.5 PPM	0.13 PPM
Oxygen	< 0.5 PPM	0.50 PPM
NITROGEN	99.9995 %	99.9995 %

Permanent Notes: Product meets 40 CFR 1065 requirements

Cylinders in Batch:

CC138636, CC195240, CC234887, CC235132, CC252651, CC252661, CC252885, CC252901, EB0005066, EB0005971

Notes:

Impurities verified against analytical standards traceable to NIST by weight and/or analysis.

Signature on file

Approved for Release

Airgas

CERTIFICATE OF ANALYSIS
Grade of Product: EPA Protocol

Part Number:	E03NI78E15A1066	Reference Number:	54-124387182-2
Cylinder Number:	CC282122	Cylinder Volume:	151.1 CF
Laboratory:	ASG - Chicago - IL	Cylinder Pressure:	2015 PSIG
PGVP Number:	B12013	Valve Outlet:	590
Gas Code:	CO2,O2,BALN	Certification Date:	Jul 30, 2013

Expiration Date: Jul 30, 2021

Certification performed in accordance with "EPA Traceability Protocol for Assay and Certification of Gaseous Calibration Standards (May 2012)" document EPA 600/R-12/531, using the assay procedures listed. Analytical Methodology does not require correction for analytical interference. This cylinder has a total analytical uncertainty as stated below with a confidence level of 95%. There are no significant impurities which affect the use of this calibration mixture. All concentrations are on a volume/volume basis unless otherwise noted.

Do Not Use This Cylinder below 100 psig, i.e. 0.7 megapascals.

ANALYTICAL RESULTS

Component	Requested Concentration	Actual Concentration	Protocol Method	Total Relative Uncertainty	Assay Dates
CARBON DIOXIDE	10.00 %	10.13 %	G1	+/- 1.0% NIST Traceable	07/30/2013
OXYGEN	12.00 %	12.19 %	G1	+/- 1.0% NIST Traceable	07/30/2013
NITROGEN	Balance				

CALIBRATION STANDARDS

Type	Lot ID	Cylinder No	Concentration	Uncertainty	Expiration Date
NTRM/CO2	06120405	CC184974	19.66 % CARBON DIOXIDE/NITROGEN	+/- 0.5%	May 01, 2016
NTRM/O2	98051016	SG9163074BAL	12.05 % OXYGEN/NITROGEN	+/- 0.7%	Dec 02, 2017

ANALYTICAL EQUIPMENT

Instrument/Make/Model	Analytical Principle	Last Multipoint Calibration
CO2-1 HORIBA VIA-510 V1E3H7P5	NDIR	Jul 22, 2013
O2-1 HORIBA MPA-510 3VUYL9NR	Paramagnetic	Jul 18, 2013

Triad Data Available Upon Request

Notes:

Signature on file

Approved for Release

Airgas

TN

Airgas Specialty Gases
12722 S Wentworth Ave.
Chicago, IL 60628
(773) 785-3000 Fax: (773) 785-1928
www.airgas.com

CERTIFICATE OF ANALYSIS
Grade of Product: EPA Protocol

Part Number:	E03NI61E15A02E5	Reference Number:	54-124282520-5
Cylinder Number:	CC187314	Cylinder Volume:	157 Cu.Ft.
Laboratory:	ASG - Chicago - IL	Cylinder Pressure:	2015 PSIG
PGVP Number:	B12011	Valve Outlet:	590
Gas Code:	OC2	Analysis Date:	Sep 21, 2011

Expiration Date: Sep 21, 2014

Certification performed in accordance with "EPA Traceability Protocol (Sept. 1997)" using the assay procedures listed. Analytical Methodology does not require correction for analytical interferences. This cylinder has a total analytical uncertainty as stated below with a confidence level of 95%. There are no significant impurities which affect the use of this calibration mixture. All concentrations are on a volume/volume basis unless otherwise noted.
Do Not Use This Cylinder below 150 psig.i.e. 1 Mega Pascal

ANALYTICAL RESULTS

Component	Requested Concentration	Actual Concentration	Protocol Method	Total Relative Uncertainty
CARBON DIOXIDE	17.00 %	16.67 %	G1	+/- 1% NIST Traceable
OXYGEN	22.00 %	21.90 %	G1	+/- 1% NIST Traceable
NITROGEN	Balance			

CALIBRATION STANDARDS

Type	Lot ID	Cylinder No	Concentration	Expiration Date
NTRM/CO2	06120403	CC185079	19.66% CARBON DIOXIDE/NITROGEN	May 01, 2016
NTRM/O2	06120209	CC195591	20.9% OXYGEN/NITROGEN	Dec 01, 2015

ANALYTICAL EQUIPMENT

Instrument/Make/Model	Analytical Principle	Last Multipoint Calibration
(CO2-1)HORIBA VIA-510	NDIR	Aug 26, 2011
(O2-1)HORIBA MPA-510	Paramagnetic	Aug 26, 2011

Triad Data Available Upon Request

Notes:

William Thomas

Approved for Release

Page 1 of 54-124282520-5

APPENDIX 5

ASTM D7036-04 AETB INFORMATION

CATALYST

AIR MANAGEMENT, INC.

QUALITY POLICY

The Quality System established by Catalyst Air Management, Inc., and described in the Quality Manual, demonstrates our commitment to the principle of providing air emissions test data of known and documented quality on a consistent basis.

As a service to our customers, and to achieve our internal goal of continuous quality improvement, we will conform to the requirements documented in our Quality Manual and to ASTM D7036.

Michael J. Taylor, President

Signature: _____

Date: 3-12-12

Jeffrey K. Ferguson, Vice President

_____

Date: 2-27-12

CATALYST

AIR MANAGEMENT, INC.

I have attended training in all aspects of ASTM D-7036 and the associated application to facilities regulated under 40 CFR Part 75.

I understand the significance of maintaining QSTI certification for each test method that I will be asked to perform, and will at all times ensure that I am following the approved test protocol for the test program.

All test projects conducted under my supervision will conform to the Catalyst Air Management Quality System, as described in the Quality Manual, and to ASTM D-7036 in all respects.

Name: Joshua A. Nicely

Signature: Joshua A. Nicely

Date: 2-25-2012

SOURCE EVALUATION SOCIETY

Qualified Source Testing Individual

LET IT BE KNOWN THAT

JOSHUA A. NICELY

HAS SUCCESSFULLY PASSED A COMPREHENSIVE EXAMINATION AND SATISFIED EXPERIENCE REQUIREMENTS IN ACCORDANCE WITH THE GUIDELINES ISSUED BY THE SES QUALIFIED SOURCE TEST INDIVIDUAL REVIEW BOARD FOR

MANUAL GAS VOLUME MEASUREMENTS AND ISOKINETIC PARTICULATE SAMPLING METHODS

ISSUED THIS 12TH DAY OF SEPTEMBER 2013 AND EFFECTIVE UNTIL SEPTEMBER 11TH 2018

Peter R. Hewitt, QSTI/QSTO Review Board

C. David Bagwell, QSTI/QSTO Review Board

Peter S. Pakalnis, QSTI/QSTO Review Board

Karen D. Kaiya-Mills, QSTI/QSTO Review Board

Therese Lowe, QSTI/QSTO Review Board

Glenn C. England, QSTI/QSTO Review Board

APPLICATION NO. 2008-142

SOURCE EVALUATION SOCIETY

Qualified Source Testing Individual

LET IT BE KNOWN THAT

JOSHUA A. NICELY

HAS SUCCESSFULLY PASSED A COMPREHENSIVE EXAMINATION AND SATISFIED EXPERIENCE REQUIREMENTS IN ACCORDANCE WITH THE GUIDELINES ISSUED BY THE SES QUALIFIED SOURCE TEST INDIVIDUAL REVIEW BOARD FOR

MANUAL GASEOUS POLLUTANTS SOURCE SAMPLING METHODS

ISSUED THIS 19TH DAY OF APRIL 2013 AND EFFECTIVE UNTIL APRIL 18TH 2018

Peter R. Westlin, QSTI/QSTO Review Board

Peter S. Pakalnis, QSTI/QSTO Review Board

Theresa Laure, QSTI/QSTO Review Board

C. David Segawa, QSTI/QSTO Review Board

Karen D. Kaiya-Mills, QSTI/QSTO Review Board

Glenn C. England, QSTI/QSTO Review Board

APPLICATION NO. 2008-142

SOURCE EVALUATION SOCIETY

Qualified Source Testing Individual

LET IT BE KNOWN THAT

JOSHUA A. NICELY

HAS SUCCESSFULLY PASSED A COMPREHENSIVE EXAMINATION AND SATISFIED EXPERIENCE REQUIREMENTS IN ACCORDANCE WITH THE GUIDELINES ISSUED BY THE SES QUALIFIED SOURCE TEST INDIVIDUAL REVIEW BOARD FOR

GASEOUS POLLUTANTS INSTRUMENTAL SAMPLING METHODS

ISSUED THIS 24TH DAY OF AUGUST 2011 AND EFFECTIVE UNTIL AUGUST 23RD, 2016

Peter R. Westlie, QSTI/QSTO Review Board

C. David Segawa, QSTI/QSTO Review Board

Peter S. Pakalnis, QSTI/QSTO Review Board

Karen D. Kajiya-Mills, QSTI/QSTO Review Board

LaRoy Owens, QSTI/QSTO Review Board

Glenn C. England, QSTI/QSTO Review Board

APPLICATION NO. 2008-142

APPENDIX 6
SAMPLE CALCULATIONS

SAMPLE EQUATIONS
FOR ISOKINETIC SAMPLING

CALCULATIONS FOR FLUE GAS VOLUME AND ISOKINETIC RATIO

Time	Dry Gas Meter Ft^3	Pitot ΔP In. H_2O	Orifice ΔH In. H_2O	Dry Gas Temp.°F In	Out	Flue Gas Static Pressure In. H_2O	Stack Temp.°F
T	V_m	Δp	ΔH	TMI	TMO	P_g	T_s

1. D_n = Nozzle Diameter (inches)

1a. A_n = Area of Nozzle (ft^2)

2. P_{bar} = Barometric Pressure (in. Hg)

3. TT = Net Sampling Time (minutes)

4. V_m = V_m Final - V_m Initial = Sample Gas Volume (Ft^3)

5. T_m = Average Dry Gas Temperature at Meter (°F)

$$T_m = \frac{Avg.TMI + Avg.TMO}{2}$$

6. Δp = Velocity head of stack gas (in. H_2O)

7. ΔH = Average Orifice Pressure Drop (in.H_2O)

8. Volume of dry gas sampled at standard conditions[a] (DSCF)

$$V_{m(std)} = \frac{(17.64)(V_m)(Y)\left(P_{bar} + \frac{\Delta H}{13.6}\right)}{(T_m + 460)}$$

9. V_{lc} = Total Water Collected = gm H_2O Silica gel + ml Imp. H_2O = ml

10. Volume of water vapor at standard conditions[b] (SCF)

$$V_{w(std)} = 0.0471(V_{lc}) = SCF$$

11. Percent moisture in flue gas

$$\%M = \frac{100(V_{w(std)})}{V_{m(std)} + V_{w(std)}}$$

12. Mole fraction of water vapor in flue gas

$$B_{ws} = \frac{\%M}{100}$$

13. Molecular Weight of dry flue gas

$$M_d = 0.44(\%CO_2) + 0.32(\%O_2) + 0.28(\%N_2 + \%CO)$$

13a. %EA = % Excess Air =

$$\frac{[(\%O_2) - 0.5(\%CO)]}{[0.264(\%N_2)] - [(\%O_2) - 0.5(\%CO)]} x100$$

14. Molecular weight of wet flue gas

$$M_s = M_d(1 - B_{ws}) + 18(B_{ws})$$

15. A = Cross-sectional area of stack (Ft^2)

$$\frac{\pi r^2}{144}$$

16. P_s = Flue gas pressure (in, Hg)

$$P_s = P_{bar} + P_g$$

NOTE: $$P_g(Hg) = \frac{P_g(in.H_2O)}{13.6}$$

17. T_s = Absolute stack temperature (°R)

$$T_s = 460 + t_s$$

18. Flue velocity at stack conditions (FT/SEC)

$$V_s = (K_p)(C_p)\left[\left(\sqrt{\Delta p}\right)avg\right]\sqrt{\frac{T_s(avg)}{P_s * M_s}}$$

C_p = pitot tube coefficient
K_p = pitot tube constant = 85.49ft/sec

19. Flue gas volumetric flow rate at standard conditions[b] (SCFM)

$$Q_s = (V_s)(A)\left(\frac{528}{T_s(avg.)}\right)\left(\frac{P_s}{29.92}\right)(60)$$

20. Flue gas volumetric flow rate at standard conditions[c] (DSCFM)

$$Q_{sd} = (1 - B_{ws})(V_s)(A)\left(\frac{528}{T_s(avg.)}\right)\left(\frac{P_s}{29.92}\right)(60)$$

21. Flue gas volumetric flow rate at stack conditions (ACFM)

$$Q_a = (V_s)(A)(60)$$

22. Percent Isokinetic

$$\%I = \frac{K_4(T_s)(V_{m(std)})}{P_s V_s A_n \Theta(1 - B_{ws})}$$

$K_4 = 0.09450$
$\Theta = time(\min)$

NOTES: [a]Dry standard cubic feet at 68°F, 29.92 in. Hg
[b]Standard conditions at 68°F, 29.92 in. Hg
[c]Dry standard cubic feet per minute at 68°F, 29.92 in. Hg

II. Calculations for grain loading and emission rates

23. Particulate (gr/DSCF)

$$gr / DSCF = 0.01543\left(\frac{mg}{V_{m(std)}}\right)$$

24. Particulate (mg/ACM)

$$mg / ASCM = \left(\frac{mg}{V_m}\right)$$

25. Particulate (mg/ACM_{stack}), PM CEMS conditions 160° C

$$mg / ASCMstack = \left(\frac{mg}{ACM}\right)\left(\frac{(460 + Tm)}{780}\right)(1 - Bws)$$

26. Particulate (lbs/mmBtu), F-Factor Method

Using $O_2 = \left(\frac{(gr / dscf)(Fd)}{7000}\right)\left(\frac{(20.9)}{(20.9 - \%O_2)}\right)$

Using $CO_2 = \left(\frac{(gr / dscf)(Fc)}{7000}\right)\left(\frac{100}{(\%CO_2)}\right)$

Run 1 U3

CALCULATION QUALITY ASSURANCE CHECK

$$V_{mstd} = \frac{(17.64)(1.01)(50.243)(25.17 + (1.792/13.6))}{(460 + 85)} = 41.580$$

$$V_w = 0.0471(130) = 6.1230$$

$$\%M = 100(6.1230) / (6.1230 + 41.580) = 12.84$$

$$Bws = 12.84 / 100 = 0.1284$$

$$Md = 0.44(12.5) + 0.32(7.6) + 0.28(100 - 7.6 - 12.5) = 30.30$$

$$Ms = 30.30(1 - 0.1284) + 18(0.1284) = 28.72$$

$$Ps = 25.17 + (2.10/13.6) = 25.32$$

$$Ts = 460 + 115 = 575$$

$$Vs = (0.84)(85.49)(0.830)\sqrt{\frac{575}{(25.32)(28.72)}} = 53.0$$

$$Qstd = (53.0)(60)(948.4)(1 - 0.1284)\left(\frac{528}{575}\right)\left(\frac{25.32}{29.92}\right) = 2,042,093$$

$$\%I = \frac{(0.09450)(575)(41.580)}{(1 - 0.1284)(53.0)(60)(25.32)(3.14 \times 10^{-4})} = 102.5$$

$$mg/acm = 21.4 / (50.243 / 35.31) = 15.04$$

$$mg/acm \text{ @ } 16\%\ O_2 = (15.04)(1 - 0.1284)((460 + 85)/780) = 9.15$$

$$gr/dscf = 0.01543\,(21.4/41.580) = 0.008$$

$$lb/mmBtu = \frac{(0.008)(9780)}{7000}(20.9/(20.9 - 7.6)) = 0.017$$

APPENDIX 7
FIGURES

CATALYST
AIR MANAGEMENT, INC.

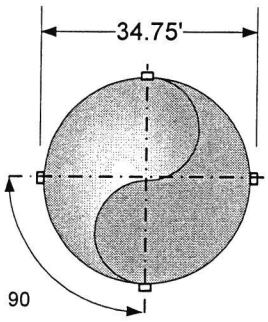

SECTION A - A

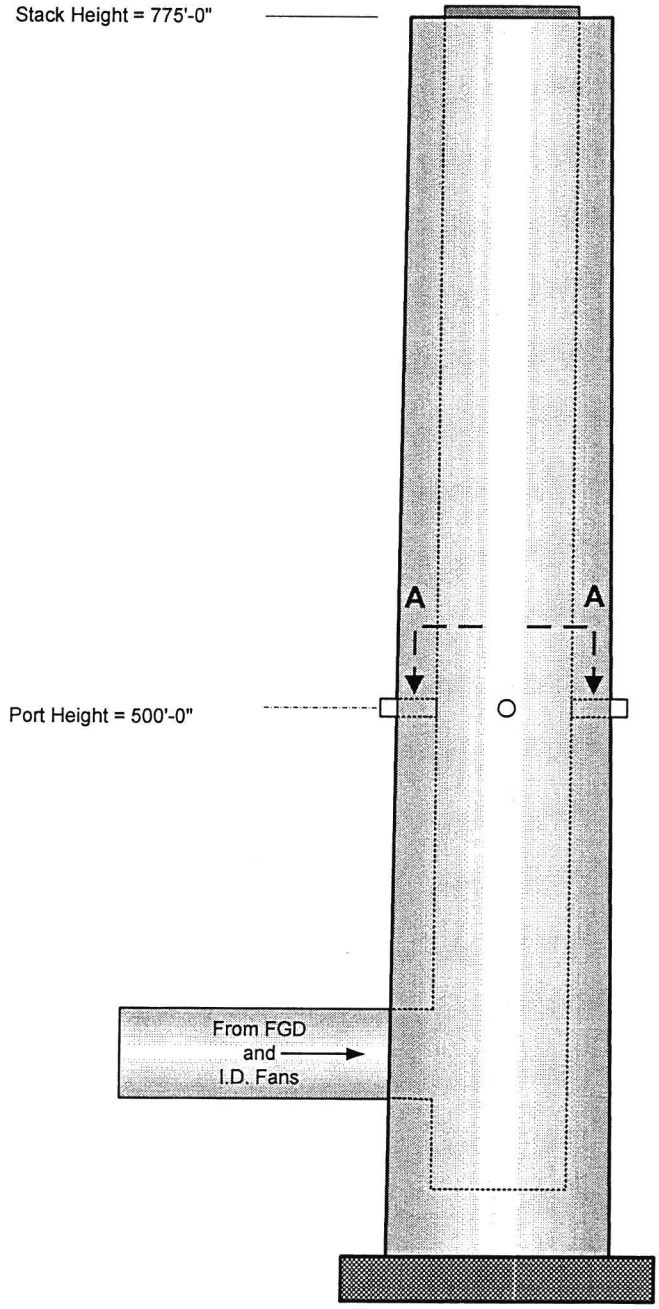

TRAVERSE POINTS (Typ 4 Ports)
FLOW (Inches) from inside of stack.

1. 18.35"
2. 60.88"
3. 123.43"

TITLE		
SALT RIVER PROJECT - NAVAJO GENERATING STATION		
DESCRIPTION		DATE
STACK TEST PORT CONFIGURATION		9/24/09
SCALE	DRAWN BY	REVISED
NONE	MJ TAYLOR	12/30/09

CATALYST
AIR MANAGEMENT, INC.

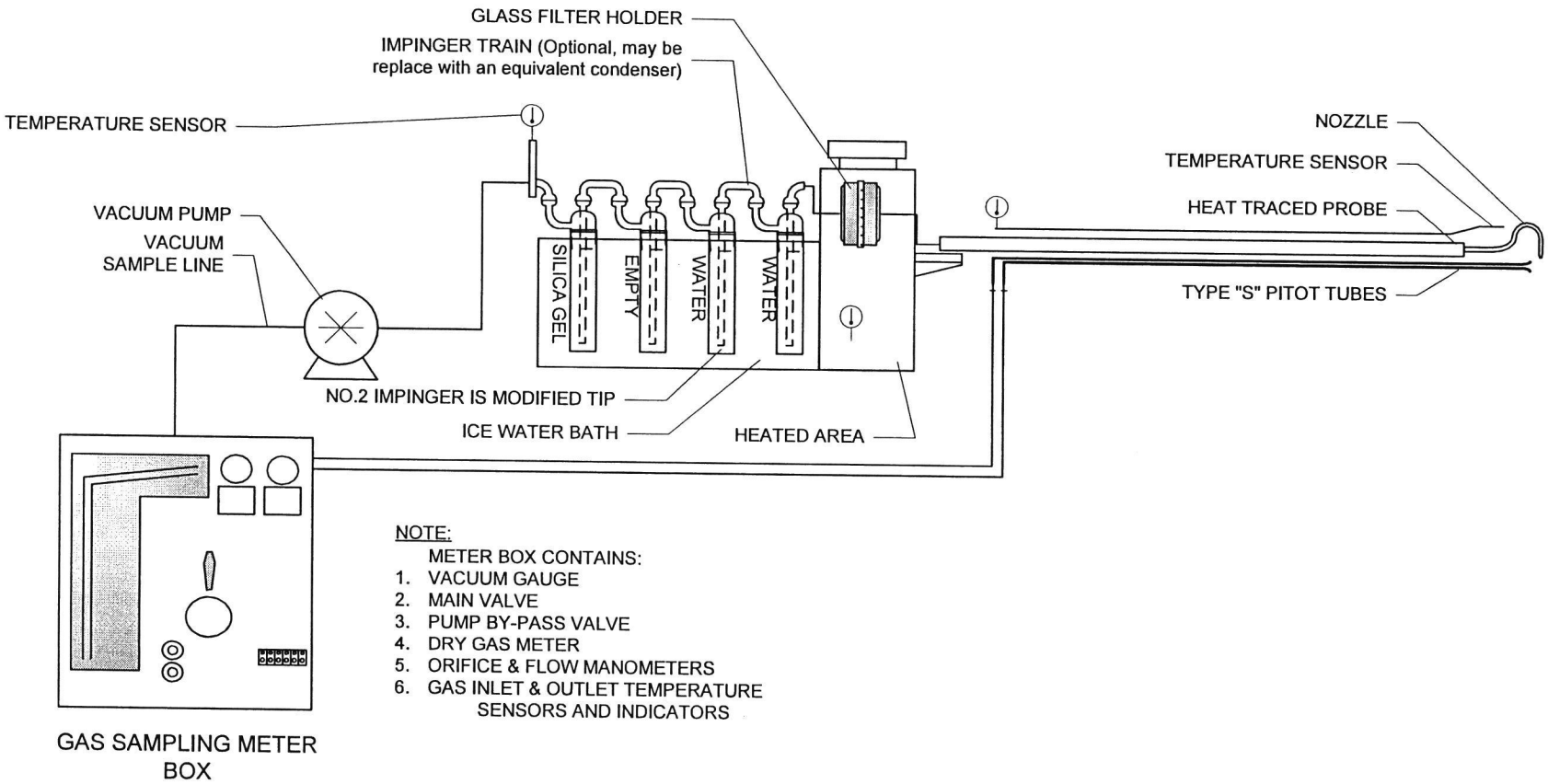

GAS SAMPLING METER BOX

NOTE:
METER BOX CONTAINS:
1. VACUUM GAUGE
2. MAIN VALVE
3. PUMP BY-PASS VALVE
4. DRY GAS METER
5. ORIFICE & FLOW MANOMETERS
6. GAS INLET & OUTLET TEMPERATURE SENSORS AND INDICATORS

TITLE		
EPA METHOD 5 SAMPLING TRAIN		
DESCRIPTION		DATE
PARTICULATE SAMPLE TRAIN		01-26-98
SCALE	DRAWN BY	REVISED
NONE	RF COBB	3/3/2010

CATALYST
AIR MANAGEMENT, INC.

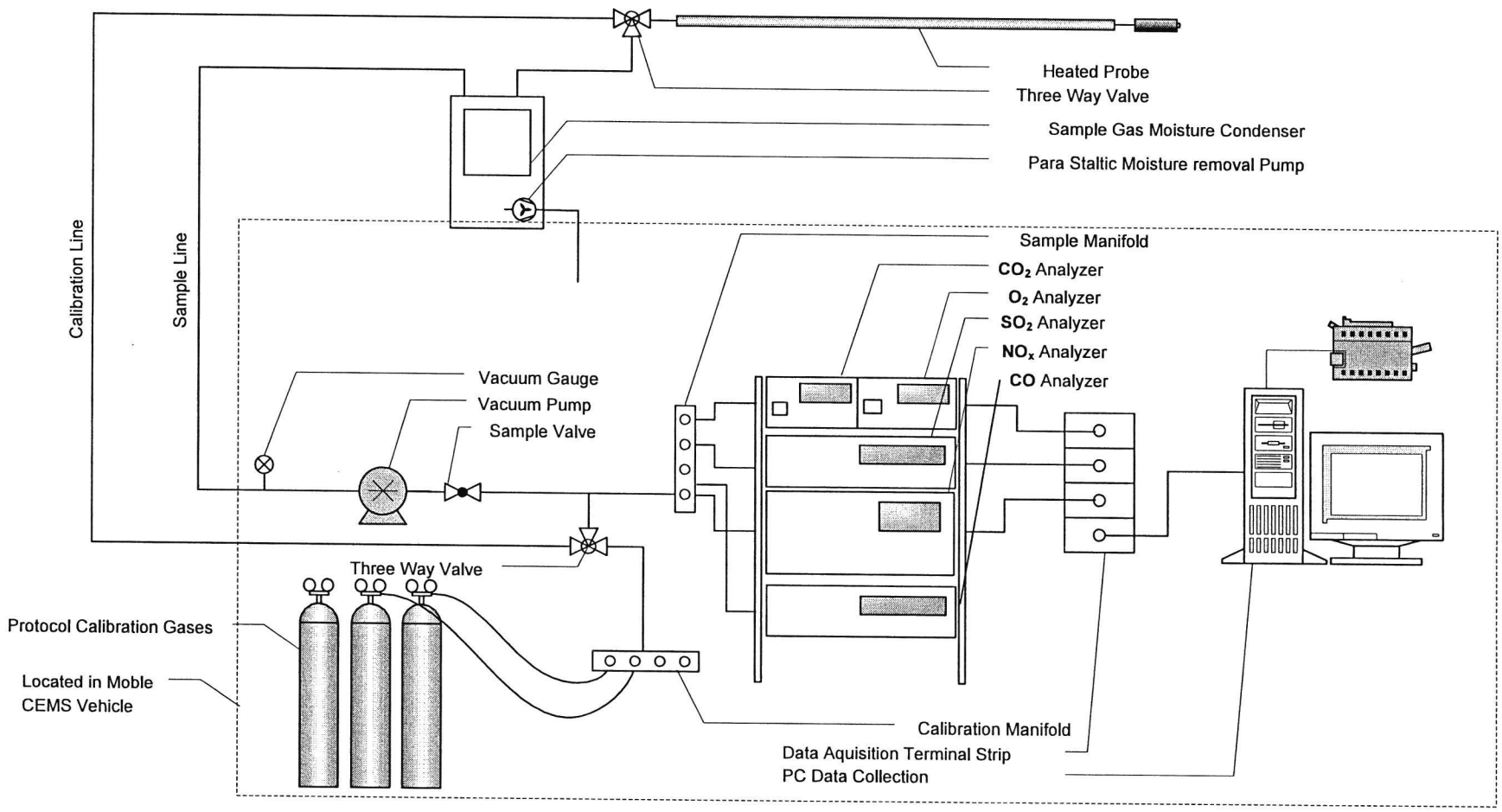

TITLE		
EPA INSTRUMENTAL SAMPLE TRAIN		
DESCRIPTION		DATE
SAMPLE TRAIN SCHEMATIC		01-26-98
SCALE	DRAWN BY	REVISED
NONE	RF COBB	