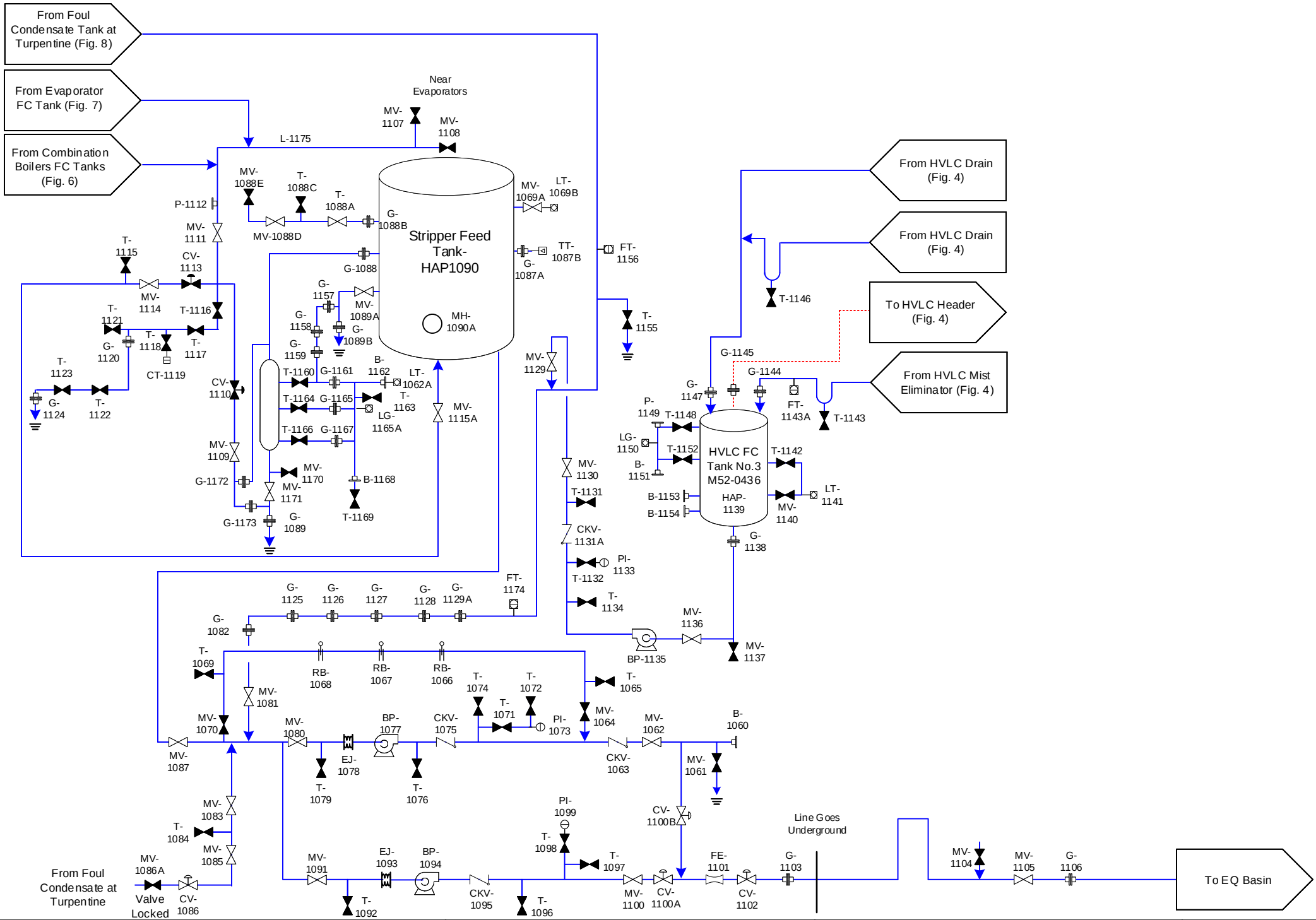

Vent Gases
Condensates
Liquor/Stock Lines
Process Lines

To Another Page and Indicated Equipment

From Another Page and Indicated Equipment

ENVIRONMENTAL 360

New-Indy – Catawba Mill

LDAR Inspection and Testing Diagrams

Stripper System Foul Condensate

Rev. Date February 2021

Figure 1

Stripper System Foul Condensate

Completed Date/Time:

Number	Type	Equip. Number	Pressure (+/-)	Background	VOC Reading	Is Component Free of Leaks or Defects?	Comments
1060	B						
1061	MV	24-MV-0361					
1062	MV	24-MV-0359					
1062A	LT						
1063	CKV						
1064	MV	24-MV-0445					
1065	T						
1066	RB						
1067	RB						
1068	RB						
1069	T						
1069A	MV						
1069B	LT	51-LT-265					
1070	MV	24-MV-445					
1071	T						
1072	T						
1073	PI						
1074	T						
1075	CKV						
1076	T						
1077	BP						
1078	EJ						
1079	T						
1080	MV	24-MV-363					
1081	MV						
1082	G						
1083	MV	V704F					
1084	T						
1085	MV						
1086	CV	51-HV-269					
1086A	MV						
1087	MV	24-MV-362					
1087A	G						
1087B	TT	51-TT-266					
1088	G						
1088A	T						
1088B	G						
1088C	T						
1088D	MV						
1088E	MV						
1089	G						
1089A	MV	24-MV-0352					
1089B	G						
1090	HAP						
1090A	MH						
1091	MV	24-MV-0365					
1092	T						
1093	EJ						
1094	BP						
1095	CKV	V884F					
1096	T						
1097	T						
1098	T						
1099	PI						
1100	MV	24-MV-360					
1100A	CV						
1100B	CV						
1101	FE						
1102	CV	51-FCV-267					
1103	G						
1104	MV						
1105	MV						
1106	G						
1107	MV						
1108	MV						
1109	MV						
1110	CV						
1111	MV						
1112	P						
1113	CV						
1114	MV						
1115	T						
1115A	MV						
1116	T						
1117	T						
1118	T						
1119	CT						
1120	G						
1121	T						
1122	T						
1123	T						
1124	G						
1125	G						
1126	G						
1127	G						
1128	G						
1129	MV						
1129A	G						
1130	MV						
1131	T						
1131A	CKV						
1132	T						
1133	PI						
1134	T						
1135	BP						
1136	MV						
1137	MV						
1138	G						
1139	HAP	M52-0436					
1140	MV						
1141	LT						
1142	T						
1143	T						
1143A	FT						
1144	G						
1145	G						
1146	T						
1147	G						
1148	T						
1149	P						
1150	LG						
1151	B						
1152	T						
1153	B						
1154	B						
1155	T						
1156	FT						
1157	G						
1158	G						
1159	G						
1160	T						
1161	G						
1162	B						
1163	T						
1164	T						
1165	G						
1165A	LG						
1166	T						
1167	G						
1168	B						
1169	T						
1170	MV						
1171	MV						
1172	G						
1173	G						
1174	FT						
1175	L						

Stripper Feed Tank

Completed Date/Time:

Number	Type	Equip. Number	Pressure (+/-)	Background	VOC Reading	Is Component Free of Leaks or Defects?	Comments
2001	G						
2002	T						
2003	MV						
2004	T						
2005	CV	51-PCV-264					
2006	CV	51-HV-262					
2007	MV	51-MV-0672					
2008	T						
2009	T						
2010	T						
2011	PT	51-PSH-261					
2011A	PT						
2012	RD						
2013	CV	51-HV-260					
2014	T	51-MV-0675					
2015	T						
2016	T						
2017	PI						
2018	P						
2019	FA	M51-0546					
2020	P						
2021	T						
2022	T						
2023	PI	51-PI-268B					
2024	TI	01-TI-274					
2025	MV	51-MV-0673					
2026	T	24-MV-0353					
2027	L						

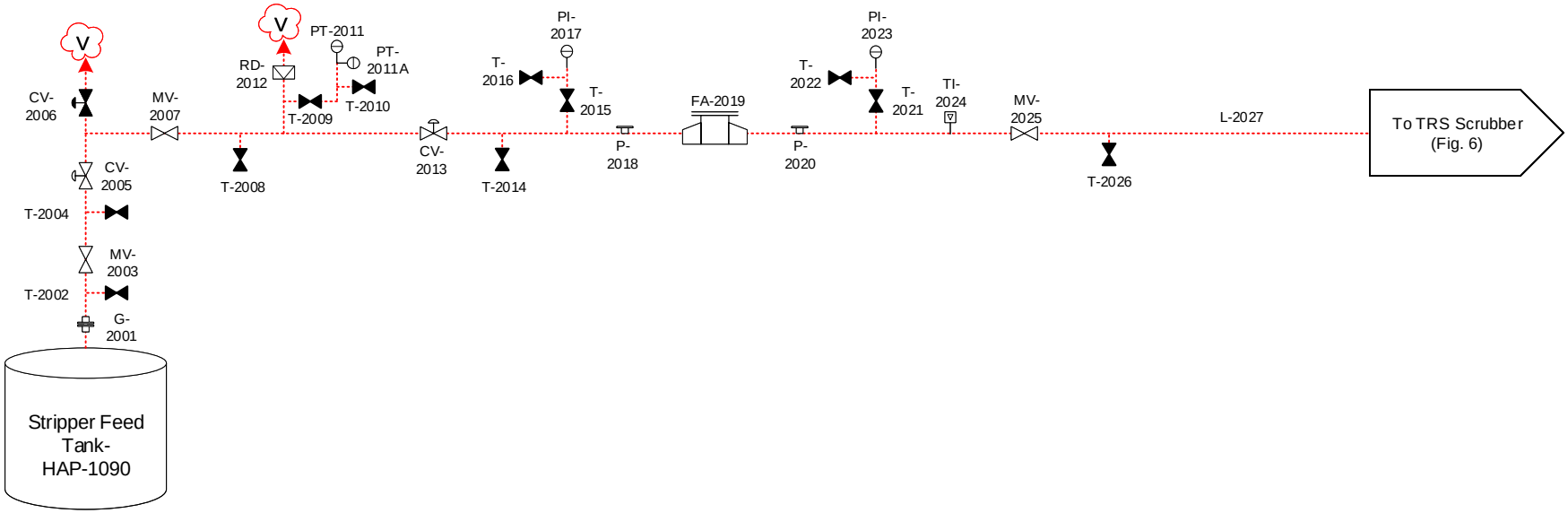

* Indicates car seal present

Vent Gases
Condensates
Liquor/Stock Lines
Process Lines

To Another Page and Indicated Equipment

From Another Page and Indicated Equipment

ENVIRONMENTAL360

New-Indy – Catawba Mill

LDAR Inspection and Testing Diagrams

Stripper Feed Tank

Rev. Date February 2021

Figure 2

Combination Boiler HVLC Incinerator

Completed Date/Time:

Number	Type	Equip. Number	Pressure (+/-)	Background	VOC Reading	Is Component Free of Leaks or Defects?	Comments
4000	EJ						
4001	MV	37-MV-0271					
4002	P						
4003	T						
4004	PI						
4005	FA						
4006	T						
4007	PI						
4008	G						
4009	TT						
4009A	P						
4010	EJ						
4011	MV	37-MV-0270					
4012	T						
4013	PI						
4014	FA						
4015	T						
4016	PI						
4017	EJ						
4018	TT						
4019	MV	26-MV-0628					
4020	T	BOP271					
4021	PI						
4022	FA	M52-0426					
4023	T	BOP270					
4024	PI	52-PI-930					
4025	EJ						
4026	MV						
4027	P						
4028	T						
4029	PI						
4030	FA						
4031	T						
4032	PI						
4033	CV						
4034	MV	26-MV-0626					
4035	T						
4036	PT	52-PSH-960					
4037	MV	52-MV-0625					
4038	RD						
4039	MV						
4040	CV						
4041	CV						
4042	G						
4043	TT	52-TT-965					
4044	P						
4044A	P						
4045	G						
4046	G						
4047	P						
4048	ME						
4048A	G						
4049	P						
4050	G						
4051	L						

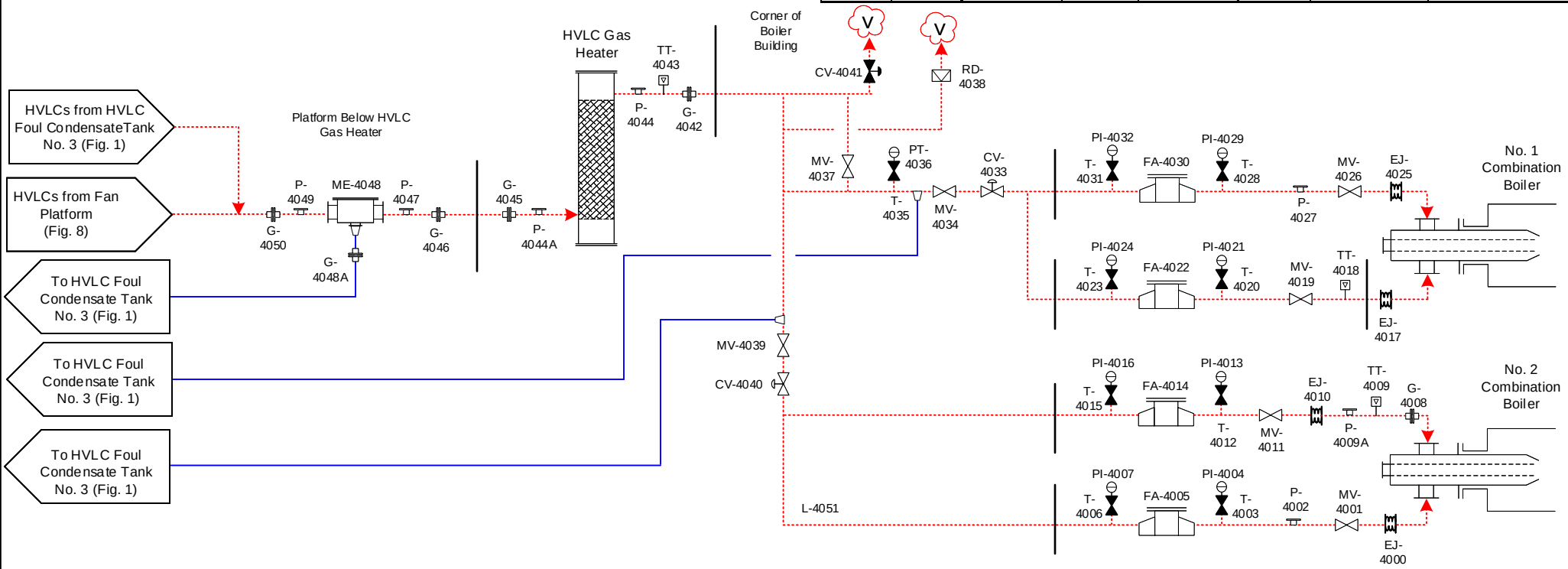

Vent Gases

Condensates

Liquor/Stock Lines

Process Lines

To Another Page and Indicated Equipment

From Another Page and Indicated Equipment

ENVIRONMENTAL360

New-Indy – Catawba Mill

LDAR Inspection and Testing Diagrams

Combination Boiler HVLC Incineration

Rev. Date February 2021

Figure 4

Combination Boiler LVHC Incineration

Completed Date/Time:

Number	Type	Equip. Number	Pressure (+/-)	Background	VOC Reading	Is Component Free of Leaks or Defects?	Comments
5014	G						
5015	EJ						
5016	MV	37-MV-0313					
5017	T						
5018	PT	37-PT-385					
5019	TT	37-TT-384					
5020	P						
5021	FA						
5022	P						
5023	T						
5024	PT	37-PT-383					
5039	G						
5040	EJ						
5041	MV	26-MV-0532					
5042	T						
5043	PT	26-PT-377					
5044	TT						
5045	P						
5046	FA						
5047	P						
5048	T						
5049	PT	26-PT-375					
5050	L						

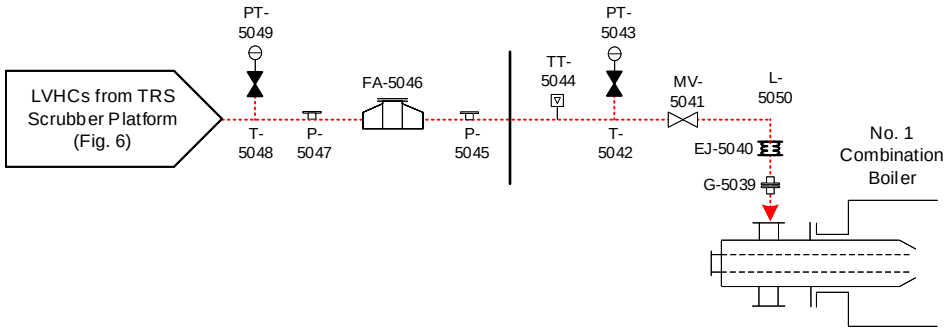

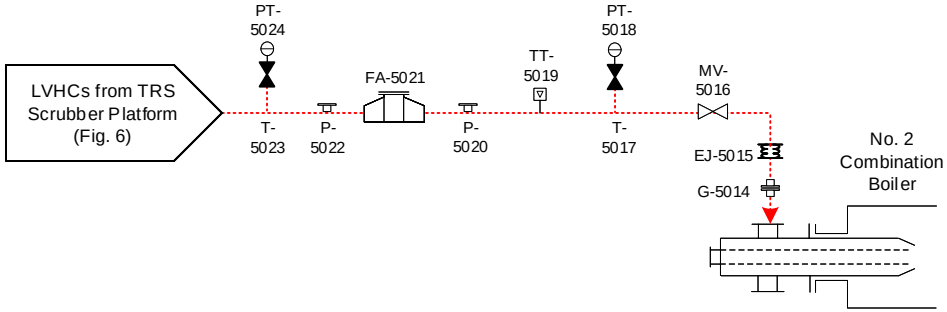

Vent Gases
Condensates
Liquor/Stock Lines
Process Lines

To Another Page and Indicated Equipment

From Another Page and Indicated Equipment

ENVIRONMENTAL360

New-Indy – Catawba Mill

LDAR Inspection and Testing Diagrams

Combination Boiler LVHC Incineration

Rev. Date February 2021

Figure 5

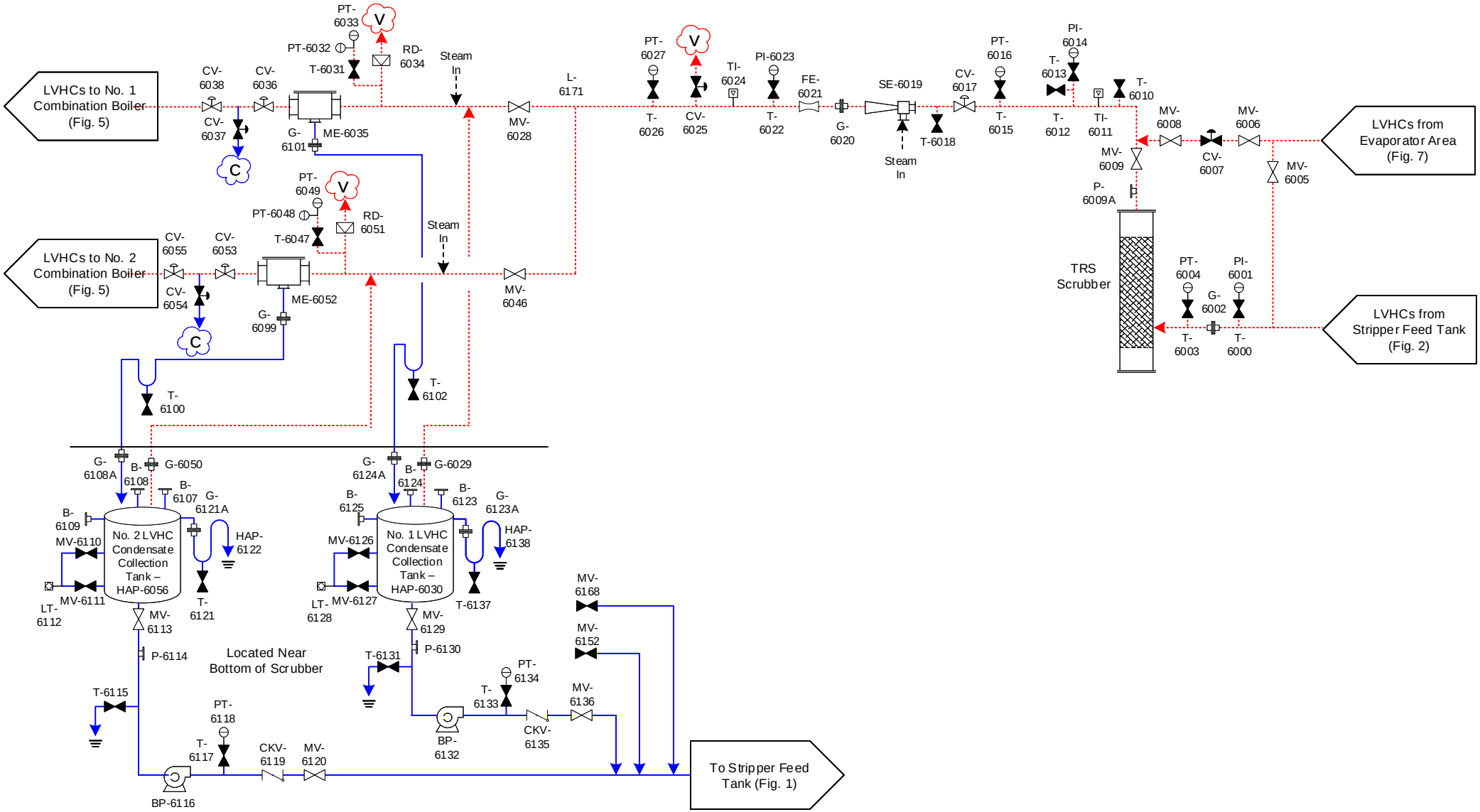

Vent Gases
Condensates
Liquor/Stock Lines
Process Lines

To Another Page and Indicated Equipment

From Another Page and Indicated Equipment

ENVIRONMENTAL360

New-Indy – Catawba Mill

LDAR Inspection and Testing Diagrams

TRS Scrubber Platform

Rev. Date February 2021

Figure 6

TRS Scrubber Platform

Completed Date/Time:

Number	Type	Equip. Number	Pressure (+/-)	Background	VOC Reading	Is Component Free of Leaks or Defects?	Comments
6000	T						
6001	PI						
6002	G						
6003	T						
6004	PT						
6005	MV	26-MV-0485					
6006	MV	26-MV-0486					
6007	CV	26-HV-364					
6008	MV	26-MV-0575					
6009	MV	26-MV-0507					
6009A	P						
6010	T						
6011	TI						
6012	T						
6013	T						
6014	PI						
6015	T						
6016	PT						
6017	CV	26-PCV-365					
6018	T						
6019	SE						
6020	G						
6021	FE						
6022	T						
6023	PI						
6024	TI						
6025	CV						
6026	T						
6027	PT	26-PT-372					
6028	MV						
6029	G						
6030	HAP						
6031	T						
6032	PT						
6033	PT	26-PSH-373					
6034	RD						
6035	ME						
6036	CV						
6037	CV						
6038	CV						
6046	MV						
6047	T						
6048	PT	37-PSH-381					
6049	PT						
6050	G						
6051	RD						
6052	ME						
6053	CV	37-HV-382A					
6054	CV	37-HV-043					
6055	CV	37-HV-382B					
6056	HAP						
6099	G						
6100	T						
6101	G						
6102	T						
6107	B						
6108	B						
6108A	G						
6109	B						
6110	MV						
6111	MV						
6112	LT						
6113	MV						
6114	P						
6115	T						
6116	BP						
6117	T						
6118	PT						
6119	CKV						
6120	MV						
6121	T						
6121A	G						
6122	HAP						
6123	B						
6123A	G						
6124	B						
6124A	G						
6125	B						
6126	MV						
6127	MV						
6128	LT						
6129	MV						
6130	P						
6131	T						
6132	BP						
6133	T						
6134	PT						
6135	CKV						
6136	MV						
6137	T						
6138	HAP						
6152	MV						
6168	MV						
6171	L						

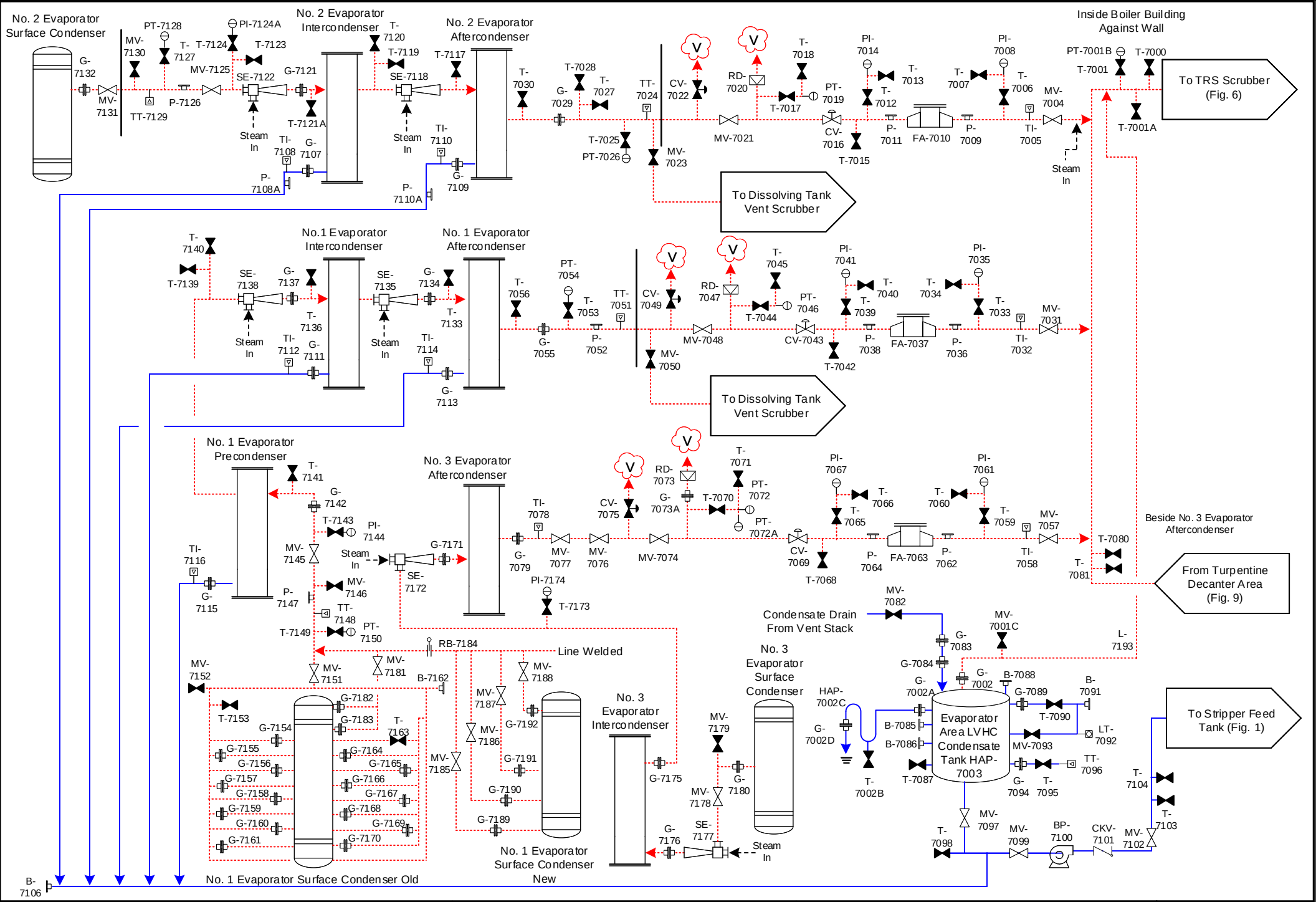

Vent Gases
Condensates
Liquor/Stock Lines
Process Lines

To Another Page and Indicated Equipment

From Another Page and Indicated Equipment

ENVIRONMENTAL360

New-Indy – Catawba Mill

LDAR Inspection and Testing Diagrams

Evaporator System

Rev. Date February 2021

Figure 7

Evaporator System

Completed Date/Time:

Number	Type	Equip. Number	Pressure (+/-)	Background	VOC Reading	Is Component Free of Leaks or Defects?	Comments
7000	T						
7001	T						
7001A	T						
7001B	PT						
7001C	MV						
7002	G						
7002A	G						
7002B	T						
7002C	HAP						
7002D	G						
7003	HAP						
7004	MV						
7005	TI						
7006	T						
7007	T						
7008	PI						
7009	P						
7010	FA						
7011	P						
7012	T						
7013	T						
7014	PI						
7015	T	24-MV-0380					
7016	CV	24-HV-334					
7017	T						
7018	T						
7019	PT						
7020	RD						
7021	MV	24-MV-0378					
7022	CV	24-HV-336					
7023	MV						
7024	TT	24-TE-358					
7025	T						
7026	PT	24-PT-357					
7027	T						
7028	T						
7029	G						
7030	T						
7031	MV	24-MV-0389					
7032	TI						
7033	T						
7034	T						
7035	PI						
7036	P						
7037	FA						
7038	P						
7039	T						
7040	T						
7041	PI						
7042	T	24-MV-0388					
7043	CV	24-HV-329					
7044	T						
7045	T						
7046	PT						
7047	RD						
7048	MV	24-MV-0387					
7049	CV	24-HV-331					
7050	MV						
7051	TT	24-TT-364					
7052	P						
7053	T						
7054	PT	24-PT-363					
7055	G						
7056	T						
7057	MV	51-MV-0660					
7058	TI						
7059	T						
7060	T						
7061	PI						
7062	P						
7063	FA						
7064	P						
7065	T						
7066	T						
7067	PI						
7068	T	51-MV-0659					
7069	CV	24-HV-339					
7070	T						
7071	T						
7072	PT						
7072A	PT						
7073	RD						
7073A	G						
7074	MV	51-MV-0658					
7075	CV	24-HV-341					
7076	MV	51-MV-0657					
7077	MV	51-MV-769					
7078	TI						
7079	G						
7080	T						
7081	T						
7082	MV						
7083	G						
7084	G						
7085	B						
7086	B						
7087	T						
7088	B						
7089	G						
7090	T						
7091	B						
7092	LT						
7093	MV						
7094	G						
7095	T						
7096	TT						
7097	MV						
7098	T						
7099	MV						
7100	BP						
7101	CKV						
7102	MV						
7103	T						
7104	T						
7106	B						
7107	G						
7108	TI						
7108A	P						
7109	G						
7110	TI						
7110A	P						
7111	G						
7112	TI						
7113	G						
7114	TI						
7115	G						
7116	TI						
7117	T						
7118	SE						
7119	T						
7120	T						
7121	G						
7121A	T						
7122	SE						
7123	T						
7124	T						
7124A	PI						
7125	MV						
7126	P						
7127	T						
7128	PT						
7129	TT						
7130	MV						
7131	MV						
7132	G						
7133	T						
7134	G						
7135	SE						
7136	T						
7137	G						
7138	SE						
7139	T						
7140	T						
7141	T						
7142	G						
7143	T						
7144	PI						
7145	MV						
7146	MV						
7147	P						
7148	TT						
7149	T						
7150	PT						
7151	MV						
7152	MV	24-MV-0399					
7153	T						
7154	G						
7155	G						
7156	G						
7157	G						
7158	G						
7159	G						
7160	G						
7161	G						
7162	B						
7163	T						
7164	G						
7165	G						
7166	G						
7167	G						
7168	G						
7169	G						
7170	G						
7171	G						
7172	SE						
7173	T	51-MV-0774					
7174	PI						
7175	G						
7176	G						
7177	SE						
7178	MV	51-MV-0783					
7179	MV	51-MV-0782					
7180	G						
7181	MV						
7182	G						
7183	G						
7184	RB						
7185	MV						
7186	MV						
7187	MV						
7188	MV						
7189	G						
7190	G						
7191	G						
7192	G						
7193	L						

HVLC Blower Platform
Completed Date/Time:

Number	Type	Equip. Number	Pressure (+/-)	Background	VOC Reading	Is Component Free of Leaks or Defects?	Comments
8000	B						
8001	T						
8002	MV						
8003	P						
8004	G						
8005	T						
8006	MV						
8007	T						
8008	G						
8009	T						
8010	PI						
8011	TI						
8012	T						
8013	TT						
8014	CV	54-PV-953					
8015	MV	26-MV-0618					
8016	CV						
8017	T	26-MV-0619					
8018	G						
8019	P						
8020	ME						
8021	T						
8022	G						
8023	G						
8024	BP	M52-0412					
8025	G						
8026	T						
8027	PI	52-PI-958					
8028	TI						
8029	MV	26-MV-0670					
8030	MV						Car seal present.
8031	MV						
8032	G						
8033	BP	M52					
8034	G						
8035	MV	26-MV-0622					
8036	T						
8037	T						
8038	FT						
8039	FE						
8040	T						
8041	T						
8042	MV						
8043	FT						
8044	FT						
8045	FT						
8045A	MV						
8046	T						
8047	MV						
8048	T						
8049	PI						
8050	G						
8051	BP						
8052	MV						
8053	G						
8054	MV						
8055	G						
8056	HAP						
8057	HAP						
8058	T						
8059	T						
8060	T						
8060A	FT						
8060B	G						
8061	G						
8062	G						
8063	G						
8063A	G						
8063B	G						
8064	G						
8065	G						
8065A	G						
8066	G						
8066A	G						
8067	G						
8068	T						
8069	B						
8070	T						
8071	MV						
8072	LT						
8073	T						
8074	P						
8075	LG						
8076	B						
8077	T						
8078	L						

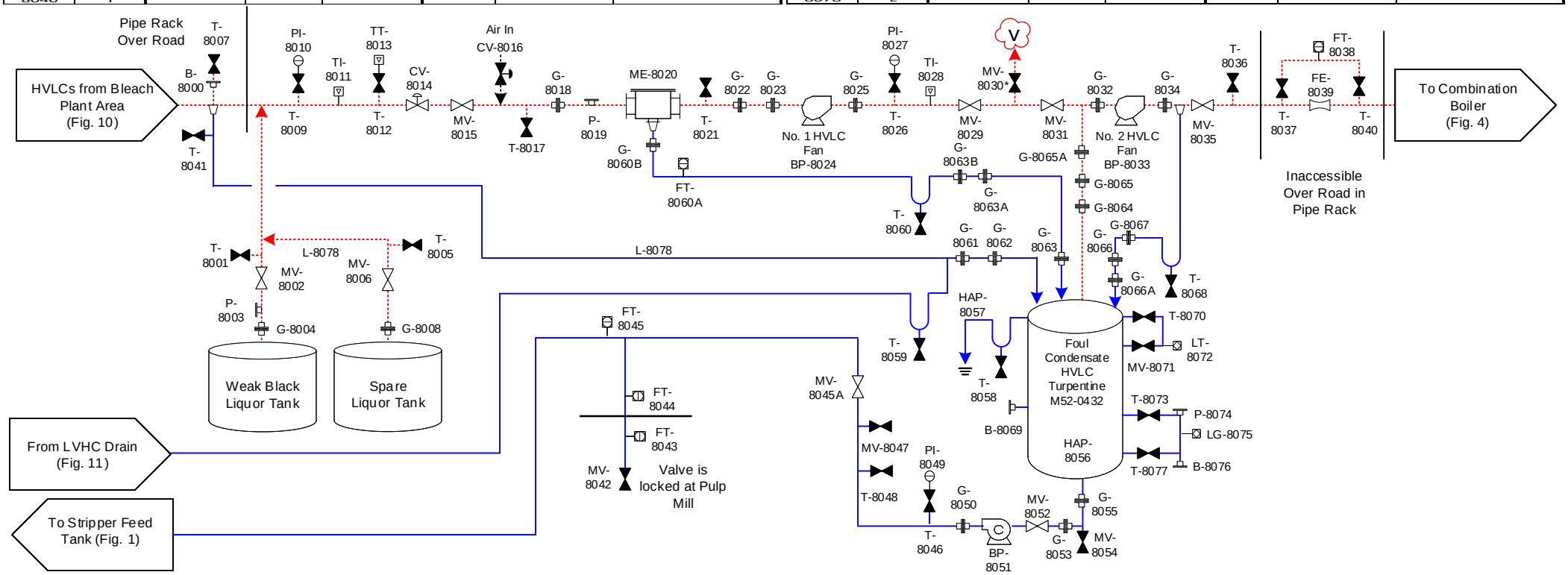

* Indicates car seal present

Vent Gases
Condensates
Liquor/Stock Lines
Process Lines

To Another Page and Indicated Equipment

From Another Page and Indicated Equipment

ENVIRONMENTAL360

New-Indy – Catawba Mill

LDAR Inspection and Testing Diagrams
HVLC Blower Platform

Rev. Date
February 2021

Figure 8

Turpentine Decanter and Standpipe

Completed Date/Time:

Number	Type	Equip. Number	Pressure (+/-)	Background	VOC Reading	Is Component Free of Leaks or Defects?	Comments
9000	T						
9001	T						
9002	TT						
9003	MV	14-MV-0312					
9004	MV						
9005	MV						
9008	MV	14-TI/TW-125					
9009	TI						
9010	T						
9011	T						
9011A	G						
9011B	EJ						
9011C	G						
9012	PI						
9013	P						
9014	FA						
9015	P						
9016	T						
9017	T						
9018	PI	14-PI-125A					
9019	T						
9020	T						
9021	CV	14-HV-127					
9022	T						
9023	T						
9024	T						
9025	PT	14-PSH-122					
9025A	PT	14-PSH-122					
9026	RD						
9027	T						
9028	MV						
9029	CV	14-HV-126					
9030	G						
9031	G						
9031A	HAP						
9031C	MV						
9033	MV	14-MV-0330					
9034	T						
9035	T						
9035A	G						
9035B	EJ						
9035C	G						
9036	PI						
9037	TI	14-TI/TW-304B					
9038	P						
9039	FA	M14-0121					
9040	P						
9041	T						
9042	T						
9043	T						
9044	PI						
9045	CV	14-HV-314					
9046	T						
9047	T						
9048	PT	14-PSH-313					
9048A	PT	14-PSH-313					
9049	RD						
9050	MV	14-MV-0342					
9051	CV	14-HV-312					
9052	MV	14-MV-0343					
9053	G						
9054	MV						
9054A	MV						
9055	PRV						
9056	L						

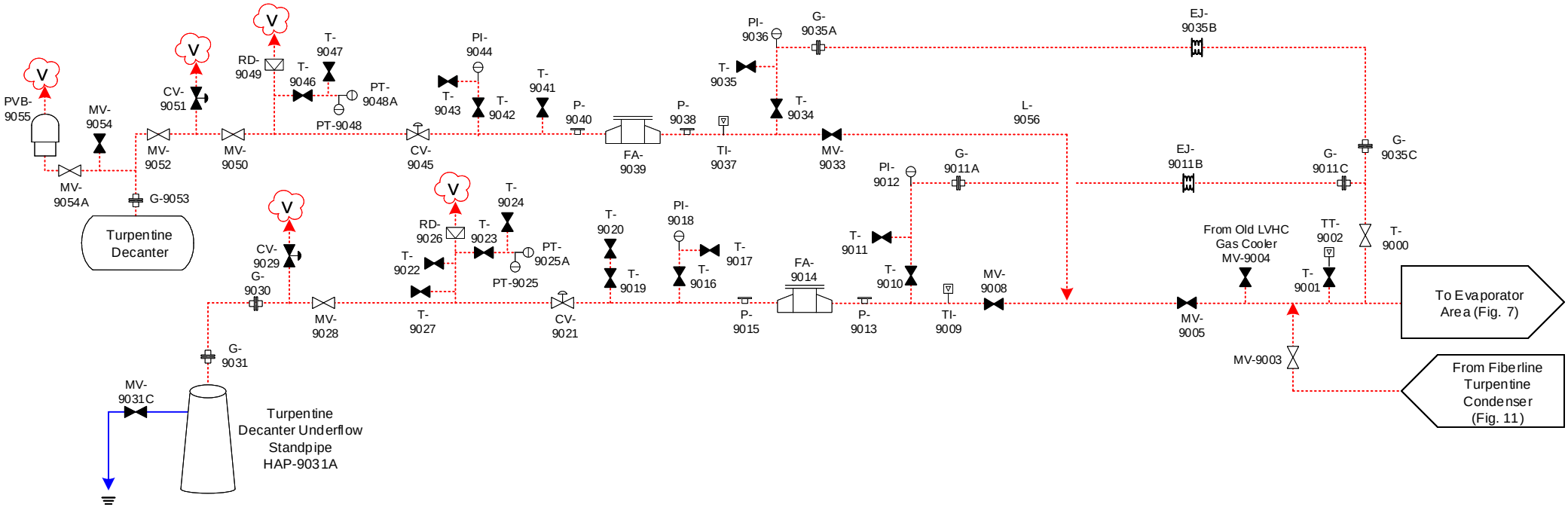

Vent Gases
Condensates
Liquor/Stock Lines
Process Lines

To Another Page and Indicated Equipment

From Another Page and Indicated Equipment

ENVIRONMENTAL360

New-Indy – Catawba Mill

LDAR Inspection and Testing Diagrams

Turpentine Decanter and Standpipe

Rev. Date February 2021

Figure 9

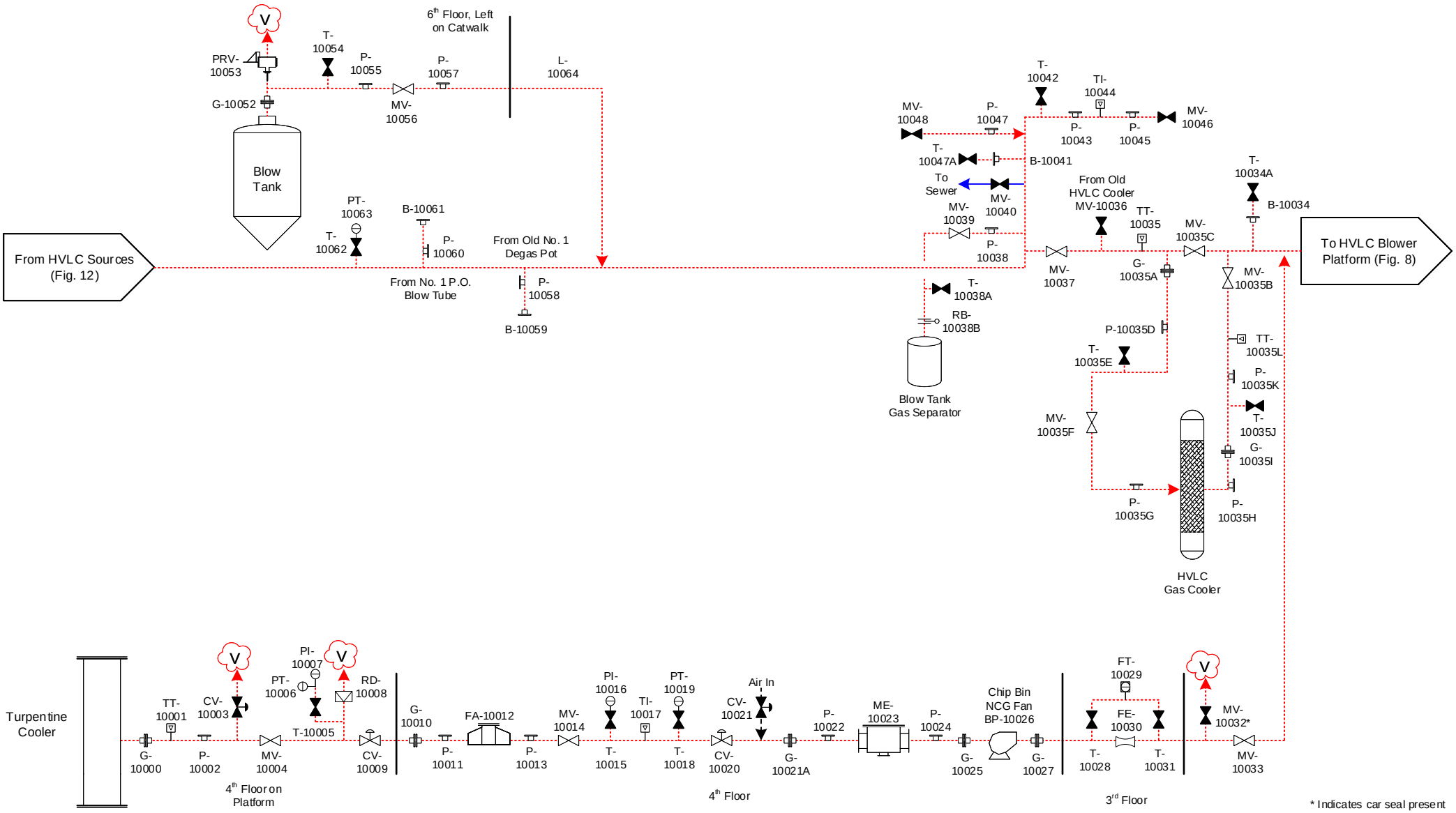

Vent Gases
Condensates
Liquor/Stock Lines
Process Lines

To Another Page and Indicated Equipment

From Another Page and Indicated Equipment

ENVIRONMENTAL360

New-Indy – Catawba Mill

LDAR Inspection and Testing Diagrams

Turpentine Cooler and Blow Tank

Rev. Date
February 2021

Figure 10

Turpentine Cooler and Blow Tank

Completed Date/Time:

Number	Type	Equip. Number	Pressure (+/-)	Background	VOC Reading	Is Component Free of Leaks or Defects?	Comments
10000	G						
10001	TT	52-TE-230					
10002	P						
10003	CV	52-QV-937					
10004	MV	52-MV-1021					
10005	T						
10006	PT	52-PSH-934					
10007	PI						
10008	RD						
10009	CV	52-EV-938					
10010	G						
10011	P						
10012	FA	M52-0429					
10013	P						
10014	MV	52-MV-1022					
10015	T						
10016	PI						
10017	TI						
10018	T						
10019	PT						
10020	CV	52-PV-941					
10021	CV						
10021A	G						
10022	P						
10023	ME	M52-0415					
10024	P						
10025	G						
10026	BP	M52-0411					
10027	G						
10028	T						
10029	FT						
10030	FE						
10031	T						
10032	MV						Car seal present.
10033	MV						
10034	B						
10034A	T						
10035	TT	52-TT-947					
10035A	G						
10035B	MV						
10035C	MV						
10035D	P						
10035E	T						
10035F	MV						
10035G	P						
10035H	P						
10035I	G						
10035J	T						
10035K	P						
10035L	TT						
10036	MV						
10037	MV						
10038	P						
10038A	T						
10038B	RB						
10039	MV						
10040	MV						
10041	B						
10042	T						
10043	P						
10044	TI						
10045	P						
10046	MV						
10047	P						
10047A	T						
10048	MV	A507					
10052	G						
10053	PRV						
10054	T						
10055	P						
10056	MV						
10057	P						
10058	P						
10059	B						
10060	P						
10061	B						
10062	T						
10063	PT	52-PT-215					
10064	L						

Turpentine Condenser and LVHC Gas Cooler

Completed Date/Time:

Number	Type	Equip. Number	Pressure (+/-)	Background	VOC Reading	Is Component Free of Leaks or Defects?	Comments
11000	RB						
11001	TT	52-TE-222A					
11002	PI						
11003	P						
11004	G						
11005	P						
11006	P						
11007	FA	M52-0512					
11008	P						
11008A	HAP						
11009	P						
11010	G						
11011	P						
11012	TT	52-TE-225					
11013	CV	52-HV-174B					
11014	MV	52-A-368					
11015	T						
11017	T						
11018	PT	52-PSH-226					
11019	RD						
11020	P						
11021	CV	52-HV-174A					
11022	T	52-A-428					
11023	T						
11024	PI	52-PI-226					
11025	FA	Z00-0395M					
11026	P						
11027	MV	52-A-541					
11028	T	52-A-437					
11029	L						

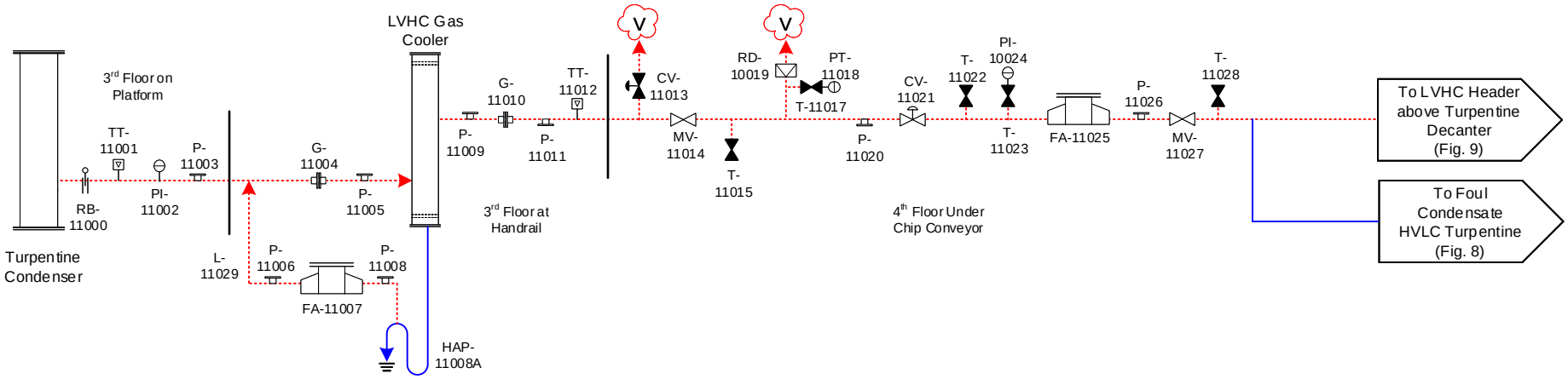

Vent Gases
Condensates
Liquor/Stock Lines
Process Lines

To Another Page and Indicated Equipment

From Another Page and Indicated Equipment

ENVIRONMENTAL360

New-Indy – Catawba Mill

LDAR Inspection and Testing Diagrams
Turpentine Condenser and LVHC Gas Cooler

Rev. Date
February 2021

Figure 11

HVLC System at Pulp Mil (1 of 2)

Completed Date/Time:

Number	Type	Equip. Number	Pressure (+/-)	Background	VOC Reading	Is Component Free of Leaks or Defects?	Comments
12000	P						
12001	MV						
12002	P						
12003	T	X182					
12004	G						
12005	P						
12006	MV						
12015	P						
12016	B						
12020	T	V4454					
12021	P						
12022	MV	0598-22-HY					
12023	P						
12024	T	D060					
12025	P						
12026	MV						
12027	P						
12028	T						
12029	P						
12030	MV	F543					
12031	P						
12032	T	F541					
12033	G						
12034	P						
12035	MV	SR307					
12039	P						
12040	MV	SR308					
12041	T						
12042	P						
12043	G						
12044	L						

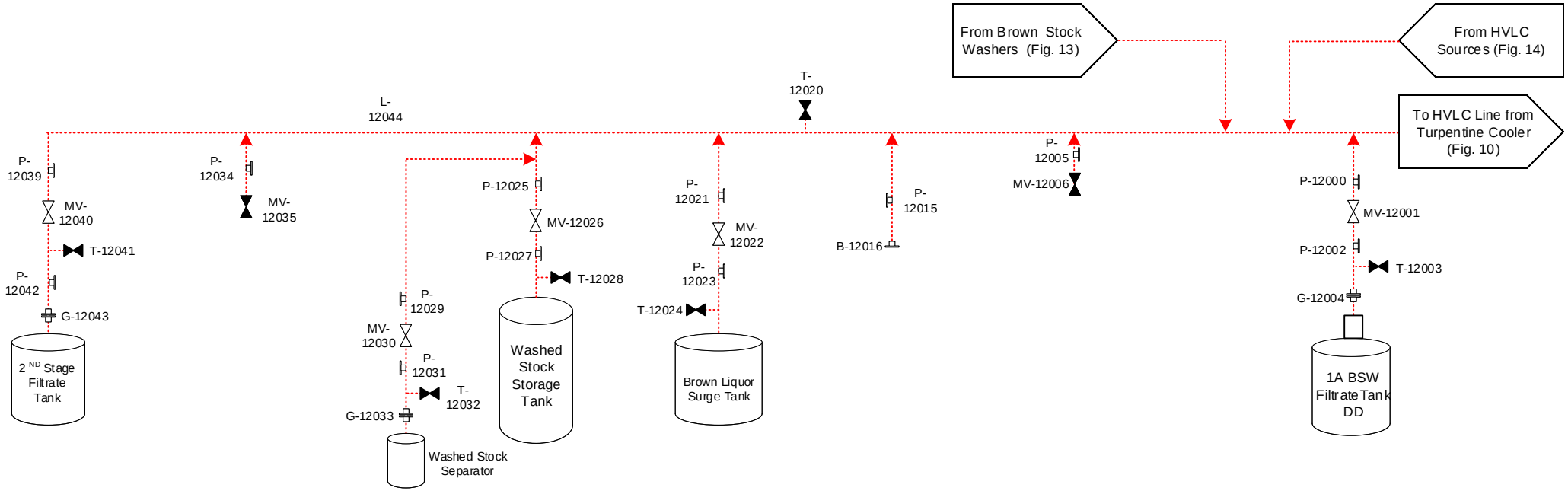

Vent Gases
Condensates
Liquor/Stock Lines
Process Lines

To Another Page and Indicated Equipment

From Another Page and Indicated Equipment

ENVIRONMENTAL360

New-Indy – Catawba Mill

LDAR Inspection and Testing Diagrams
HVLC System at Pulp Mill (1 of 2)

Rev. Date
February 2021

Figure 12

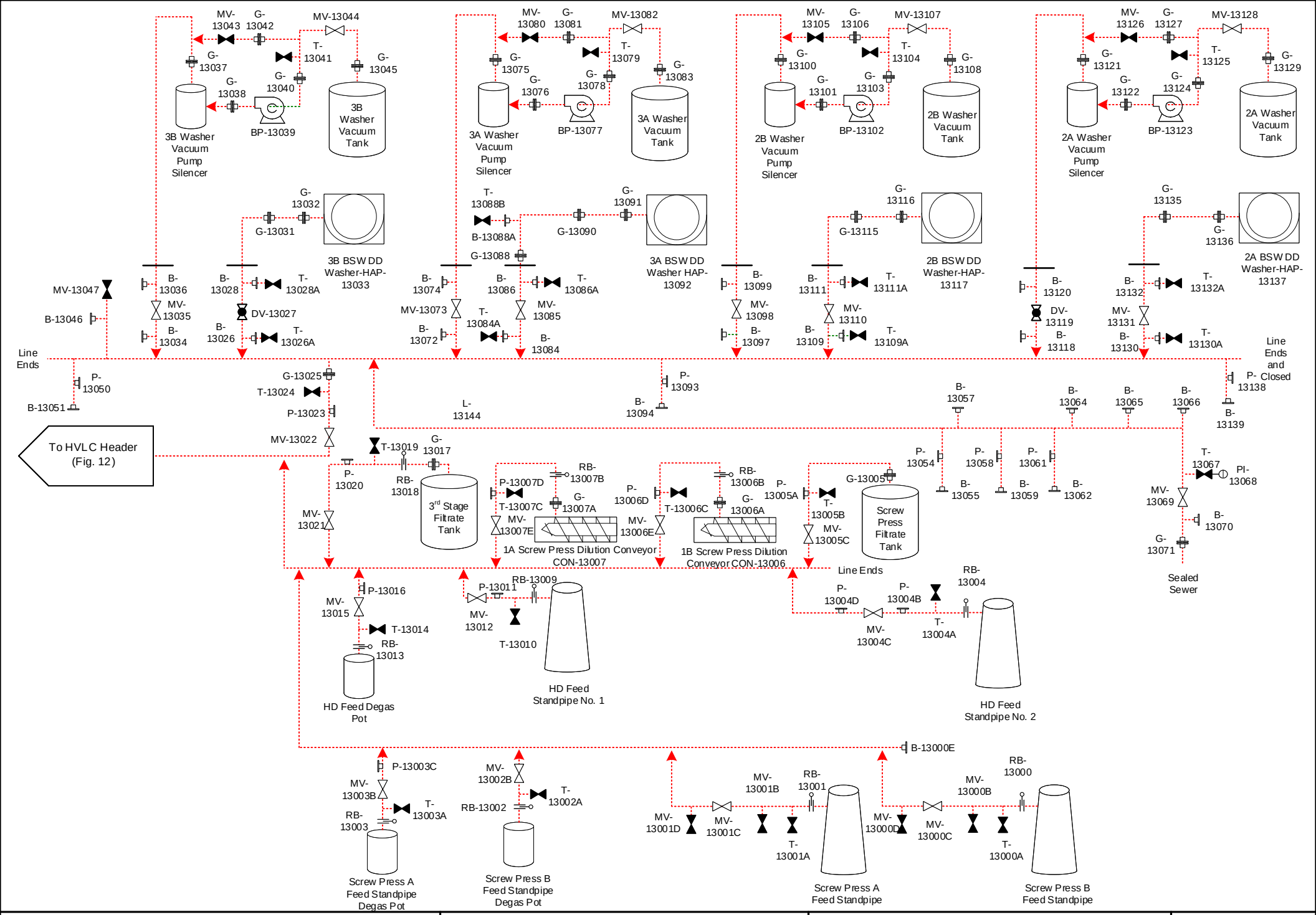

Vent Gases	
Bleach Gases	
Condensates	
Liquor/Stock Lines	
Process Lines	

To Another Page and Indicated Equipment

From Another Page and Indicated Equipment

ENVIRONMENTAL 360

New-Indy – Catawba Mill

LDAR Inspection and Testing Diagrams
Pulp Mill BSWs

Rev. Date
February 2021

Figure 13

Pulp Mill BSWs

Completed Date/Time:

Number	Type	Equip. Number	Pressure (+/-)	Background	VOC Reading	Is Component Free of Leaks or Defects?	Comments
13000	RB						
13000A	T						
13000B	MV						
13000C	MV						
13000D	MV						
13000E	B						
130001	RB						
130001A	T						
130001B	MV						
130001C	MV						
130001D	MV						
130002	RB						
13002A	T						
13002B	MV						
130003	RB						
13003A	T						
13003B	MV						
13003C	P						
130004	RB						
13004A	T						
13004B	P						
13004C	MV						
13004D	P						
130005	G						
13005A	P						
13005B	T						
13005C	MV						
130006	CON						
13006A	G						
13006B	RB						
13006C	T						
13006D	P						
13006E	MV						
130007	CON						
13007A	A						
13007B	RB						
13007C	T						
13007D	P						
13007E	MV						
13009	RB						
13010	T						
13011	P						
13012	MV						
13013	RB						
13014	T						
13015	MV						
13016	P						
13017	G						
13018	RB						
13019	T						
13020	P						
13021	MV						
13022	MV						
13023	P						
13024	T						
13025	G						
13026	B						
13026A	T						
13027	DV						
13028	B						
13028A	T						
13031	G						
13032	G						
13033	HAP						
13034	B						
13035	MV	F532					
13036	B						
13037	G						
13038	G						
13039	BP	E53-0021					
13040	G						
13041	T	F56					
13042	G						
13043	MV	F99					
13044	MV						
13045	G						
13046	B						
13047	MV						
13050	P						
13051	B						
13054	P						
13055	B						
13057	B						
13058	P						
13059	B						
13061	P						
13062	B						
13064	B						
13065	B						
13066	B						
13067	T						
13068	PI						
13069	MV						
13070	B						
13071	G						
13072	B						
13073	MV	F530					
13074	B						
13075	G						
13076	G						
13077	BP	E53-0046					
13078	G						
13079	T	F195					
13080	MV	F101					
13081	G						
13082	MV						
13083	G						
13084	B						
13084A	T						
13085	MV	F529					
13086	B						
13086A	T						
13088	G						
13088A	B						
13088B	T						
13090	G						
13091	G						
13092	HAP						
13093	P						
13094	B	F528					
13097	B						
13098	MV	F527					
13099	B						
13100	G						
13101	G						
13102	BP						
13103	G						
13104	T	F262					
13105	MV	F248					
13106	G						
13107	MV						
13108	G						
13109	B						
13109A	T						
13110	MV						
13111	B						
13111A	T						
13115	G						
13116	G						
13117	HAP						
13118	B						
13119	DV	F524					
13120	B						
13121	G						
13122	G						
13123	BP	E53-0106					
13124	G						
13125	T	F356					
13126	MV	F293					
13127	G						
13128	MV						
13129	G						
13130	B						
13130A	T						
13131	MV						
13132	B						
13132A	T						
13135	G						
13136	G						
13137	HAP						
13138	P						
13139	B						
13144	L						

HVLC System at Pulp Mil (2 of 2)

Completed Date/Time:

Number	Type	Equip. Number	Pressure (+/-)	Background	VOC Reading	Is Component Free of Leaks or Defects?	Comments
14000	P						
14001	MV	X170					
14002	P						
14003	T						
14003A	PI	52-PI-353					
14004	G						
14005	G						
14006	BP	M52-0092					
14007	T	X74					
14008	MV	X240					
14009	MV						
14010	G						
14011	P						
14012	MV	X169					
14013	P						
14014	T	X179					
14015	PI						
14016	G						
14017	MV						
14018	G						
14019	HAP						
14020	T						
14021	MV						
14023	P						
14024	MV	X171					
14025	P						
14026	T						
14027	G						
14027A	MV						
14028	RB						
14045	P						
14046	T						
14047	PI						
14048	MV	X168					
14049	P						
14051	MV						
14052	G						
14053	HAP						
14054	P						
14055	MV	X167					
14056	P						
14057	T						
14057A	PI						
14058	G						
14059	G						
14060	BP	E52-0128					
14061	T	X159					
14062	MV	X265					
14063	MV						
14064	G						
14065	P						
14066	MV	SR313					
14069	P						
14070	MV	SR312					
14077	P						
14078	MV						
14088	L						

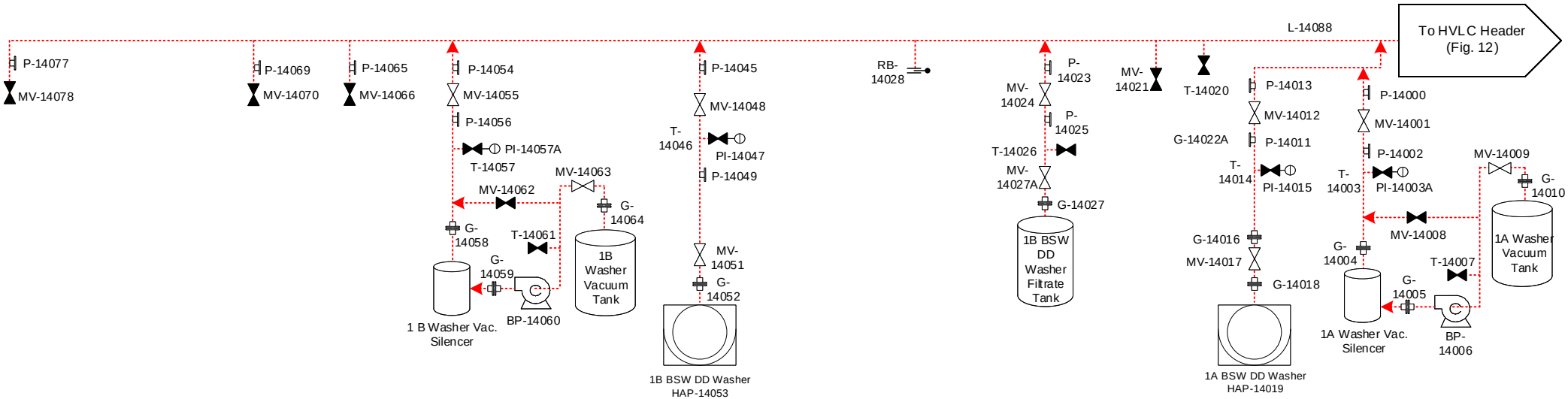

Vent Gases

Condensates

Liquor/Stock Lines

Process Lines

To Another Page and Indicated Equipment

From Another Page and Indicated Equipment

ENVIRONMENTAL360

New-Indy – Catawba Mill

LDAR Inspection and Testing Diagrams

HVLC System at Pulp Mill (2 of 2)

Rev. Date February 2021

Figure 14